PEUGEOT



PEUGEOT BOXER WORKSHOP MANUAL 2006 - 2017

You will see that this workshop manual is for the Citroën Jumper. Don’t worry, the Peugeot Boxer was badged the Citroën Jumper in a lot of countries and is also known as the Citroen Relay, Fiat Ducato, Peugeot Manager and the Ram Promaster. Your workshop manual deals with the 3rd generation Peugeot Boxer which was launched in 2006. All the models (Jumper, Ducato, Relay, Boxer, Manager etc) all share the same design and engineering, with only subtle trim changes between each brand. So don’t worry, you have the correct manual.

CHECKING AND ADJUSTING VALUES : ENGINES TYPES PUMA 2.2 DTE - PUMA C

1. Foreword

1.1. Units of pressure

1/ Units of pressure in bars.

N.B. : One bar has the advantage of being close to the average atmospheric pressure at sea level.

2/ Unit of pressure in millimetres of mercury (symbol: mmHg) or Torr (symbol: Torr).
This unit of measurement of pressure was origially defined as the pressure exerted at 0°C by a 1 millimetre column of mercury, later indexed to the atmospheric pressure.
The pressure values indicated in the tables below are the values read on the pressure gauge (Relative pressure).

N.B. : Relative pressure is equal to absolute pressure minus atmospheric pressure.

1.2. Units of tension

The SEEM unit measures by deflection of the static tension of the belt, by deforming a portion of its length.

2. General engine information

2.1. PUMA EURO 4

Type of engine	P.22DTE	P.22DTE	P.22DTE +
Engine legislative type	4HV	4HU	4HM
Cubic capacity	2198 cc		
Fuel	Diesel		
Maximum power	74 kW	88 kW	95,5 kW
Max. power speed	2900 rpm	3500 rpm	3500 rpm
Maximum torque	25 daNm	32 daNm	32 daNm
Max. torque speed	1500 rpm	2000 rpm	2000 rpm

2.2. PUMA EURO 5

Type of engine	PUMA C	PUMA C	PUMA C
Engine legislative type	4HG	4HH	4HJ
Cubic capacity	2198 cc		
Fuel	Diesel		
Maximum power	81 kW	96 kW	110 kW
Max. power speed	3500 rpm	3500 rpm	3500 rpm
Maximum torque	25 daNm	32 daNm	35 daNm
Max. torque speed	1750 rpm	2000 rpm	2000 rpm

3. Oil capacity

3.1. PUMA EURO 4

Engine legislative type	4HV	4HU	4HM
Oil capacity without replacement of the filter cartridge	5,75 litres		
Oil capacity with replacement of the filter cartridge	6 litres		
Capacity between minimum and maximum on the oil gauge	1,5 litre		

3.2. PUMA EURO 5

Engine legislative type	4HG	4HH	4HJ
Oil capacity without replacement of the filter cartridge	5,9 litres		
Oil capacity with replacement of the filter cartridge	6,2 litres		
Capacity between minimum and maximum on the oil gauge	1,5 litre		

Oil change interval : Refer to the maintenance schedule.

CAUTION : Always check the oil level using the dipstick.

4. Oil pressure

N.B. : Check the oil level with the engine cold.

CAUTION : Oil pressure is checked with the engine hot after checking the oil level (110 °C).

4.1. PUMA EURO 4

Engine speed	Minimum oil pressure
Idling	1,7 bar
2000 rpm	4,5 Bars
4000 rpm	5,2 Bars

4.2. PUMA EURO 5

Engine speed	Minimum oil pressure
Idling	3 Bars

CAUTION : Carry out work on the engine if the oil pressure values are below those in the table.

5. Ancillary drive belt

Belt tension	By dynamic roller tensioner

6. Timing chain

Chain tension	By chain tensioner

7. Cylinder head bolts

CAUTION : After a removal, systematically replace the cylinder head bolts .

8. Pressure, engine end of compression

Measure the pressure at the end of compression, in order, on cylinders 1, 2,3 and 4.

N.B. : The difference in pressure between 2 cylinders must not exceed 5 bars.

CAUTION : Always search for the origins of fault(s), where the values measured are found to be significantly out.

9. Turbocharger pressure

9.1. PUMA EURO 4

Designation	Pressure
Maximum pressure	1,1 ± 0,1 bar

9.2. PUMA EURO 5

Designation	Pressure
1000 rpm	0,05 bar
2000 rpm	0,25 bar
3000 rpm	0,65 bar
4000 rpm	0,75 bar
Maximum pressure	1,30 bar

10. Low pressure fuel supply circuit

10.1. Static pressure checks on PUMA euro 4

Switch on the ignition	
For 3 seconds	Normal operation
	Fuel pressure indicated by the pressure gauge
Fuel feed pressure	0,45 ± 0,05 bar

10.2. Dynamic pressure checks on PUMA euro 5

Start the engine	
engine running (Idling)	Normal operation
	Fuel pressure indicated by the pressure gauge
Fuel feed pressure (Before high pressure fuel pump)	0,6 ± 0,05 bar

CHECKING AND ADJUSTING VALUES : ENGINES TYPES PUMA 2.2 DTE - PUMA C

1. Foreword

1.1. Units of pressure

1/ Units of pressure in bars.

N.B. : One bar has the advantage of being close to the average atmospheric pressure at sea level.

2/ Unit of pressure in millimetres of mercury (symbol: mmHg) or Torr (symbol: Torr).
This unit of measurement of pressure was origially defined as the pressure exerted at 0°C by a 1 millimetre column of mercury, later indexed to the atmospheric pressure.
The pressure values indicated in the tables below are the values read on the pressure gauge (Relative pressure).

N.B. : Relative pressure is equal to absolute pressure minus atmospheric pressure.

1.2. Units of tension

The SEEM unit measures by deflection of the static tension of the belt, by deforming a portion of its length.

2. General engine information

2.1. PUMA EURO 4

Type of engine	P.22DTE	P.22DTE	P.22DTE +
Engine legislative type	4HV	4HU	4HM
Cubic capacity	2198 cc		
Fuel	Diesel		
Maximum power	74 kW	88 kW	95,5 kW
Max. power speed	2900 rpm	3500 rpm	3500 rpm
Maximum torque	25 daNm	32 daNm	32 daNm
Max. torque speed	1500 rpm	2000 rpm	2000 rpm

2.2. PUMA EURO 5

Type of engine	PUMA C	PUMA C	PUMA C
Engine legislative type	4HG	4HH	4HJ
Cubic capacity	2198 cc		
Fuel	Diesel		
Maximum power	81 kW	96 kW	110 kW
Max. power speed	3500 rpm	3500 rpm	3500 rpm
Maximum torque	25 daNm	32 daNm	35 daNm
Max. torque speed	1750 rpm	2000 rpm	2000 rpm

3. Oil capacity

3.1. PUMA EURO 4

Engine legislative type	4HV	4HU	4HM
Oil capacity without replacement of the filter cartridge	5,75 litres		
Oil capacity with replacement of the filter cartridge	6 litres		
Capacity between minimum and maximum on the oil gauge	1,5 litre		

3.2. PUMA EURO 5

Engine legislative type	4HG	4HH	4HJ
Oil capacity without replacement of the filter cartridge	5,9 litres		
Oil capacity with replacement of the filter cartridge	6,2 litres		
Capacity between minimum and maximum on the oil gauge	1,5 litre		

Oil change interval : Refer to the maintenance schedule.

CAUTION : Always check the oil level using the dipstick.

4. Oil pressure

N.B. : Check the oil level with the engine cold.

CAUTION : Oil pressure is checked with the engine hot after checking the oil level (110 °C).

4.1. PUMA EURO 4

Engine speed	Minimum oil pressure
Idling	1,7 bar
2000 rpm	4,5 Bars
4000 rpm	5,2 Bars

4.2. PUMA EURO 5

Engine speed	Minimum oil pressure
Idling	3 Bars

CAUTION : Carry out work on the engine if the oil pressure values are below those in the table.

5. Ancillary drive belt

Belt tension	By dynamic roller tensioner

6. Timing chain

Chain tension	By chain tensioner

7. Cylinder head bolts

CAUTION : After a removal, systematically replace the cylinder head bolts .

8. Pressure, engine end of compression

Measure the pressure at the end of compression, in order, on cylinders 1, 2,3 and 4.

N.B. : The difference in pressure between 2 cylinders must not exceed 5 bars.

CAUTION : Always search for the origins of fault(s), where the values measured are found to be significantly out.

9. Turbocharger pressure

9.1. PUMA EURO 4

Designation	Pressure
Maximum pressure	1,1 ± 0,1 bar

9.2. PUMA EURO 5

Designation	Pressure
1000 rpm	0,05 bar
2000 rpm	0,25 bar
3000 rpm	0,65 bar
4000 rpm	0,75 bar
Maximum pressure	1,30 bar

10. Low pressure fuel supply circuit

10.1. Static pressure checks on PUMA euro 4

Switch on the ignition	
For 3 seconds	Normal operation
	Fuel pressure indicated by the pressure gauge
Fuel feed pressure	0,45 ± 0,05 bar

10.2. Dynamic pressure checks on PUMA euro 5

Start the engine	
engine running (Idling)	Normal operation
	Fuel pressure indicated by the pressure gauge
Fuel feed pressure (Before high pressure fuel pump)	0,6 ± 0,05 bar

REMOVING - REFITTING : ANCILLARY DRIVE BELT

ESSENTIAL : Observe the safety and cleanliness recommendations .

1. Tooling

tool	Reference	Designation
 Figure : E5AB153T	[0198-P]	flywheel stop
 Figure : E5AB154T	[0198-E]	Centraliser x2
	[0198-M1]	Crankshaft drive tool
	[0198-M2]	Crankshaft drive tool bolt

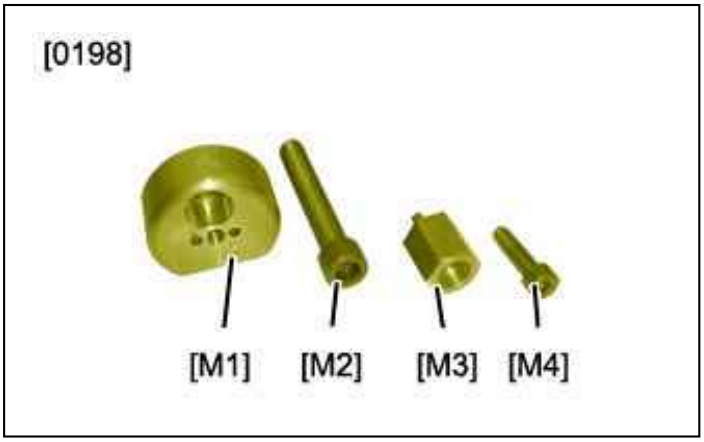 Figure : E5AB0LTT	[0198-M3]	Crankshaft driver
	[0198-M4]	Crankshaft drive tool bolt
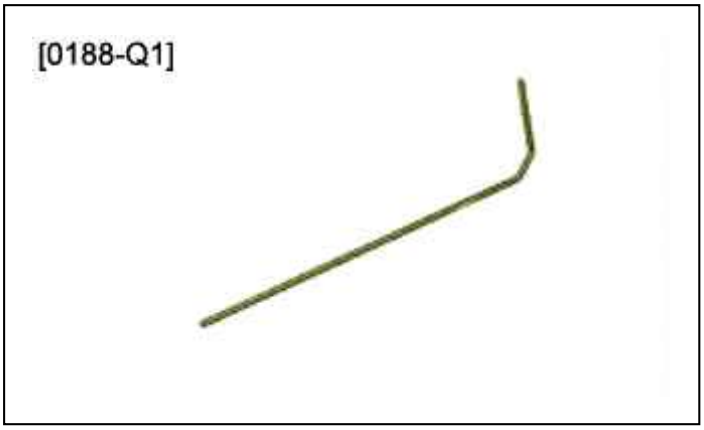 Figure : E5AB05JT	[0188-Q1]	Dynamic roller tensioner pins
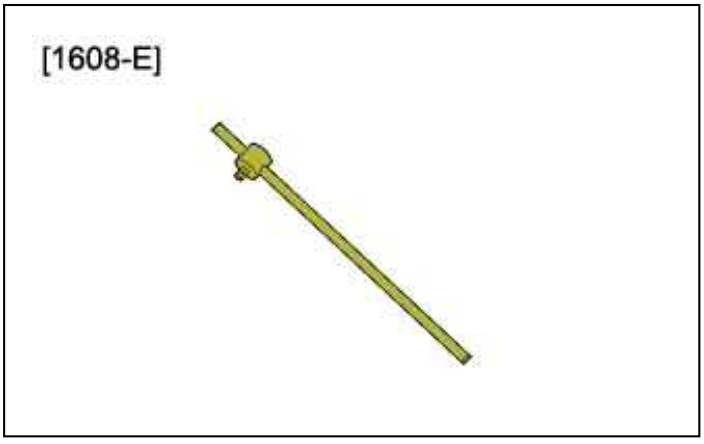 Figure : E5AB0C9T	[1608-E]	T piece extension

2. Removing

2.1. Common operations

CAUTION : Replace the torsional vibration damper double pulley for a distance travelled greater than or equal to 160000 km, when the accessories drive belt is replaced.

Place the vehicle on a 2-post lift.
Disconnect the battery negative terminal.
Remove :

- The protection plates under the engine
- The front right wheel

CAUTION : Prior to removal, and before any subsequent refitting of the ancillary drive belt that has been removed, it is compulsory for the engine to be at ambient temperature (Below 30 °C). In all other cases, replace the ancillary drive belt.

N.B. : Removing it with the engine hot causes irreversible and invisible damage to the ancillary drive belt.

CAUTION : If replacing it, cut and remove the ancillary drive belt.

CAUTION : Check that the tool [0198-P] is correctly positioned between two teeth of the flywheel; or turn the crankshaft to correctly position the tool.

Move aside and secure : The starter motor .

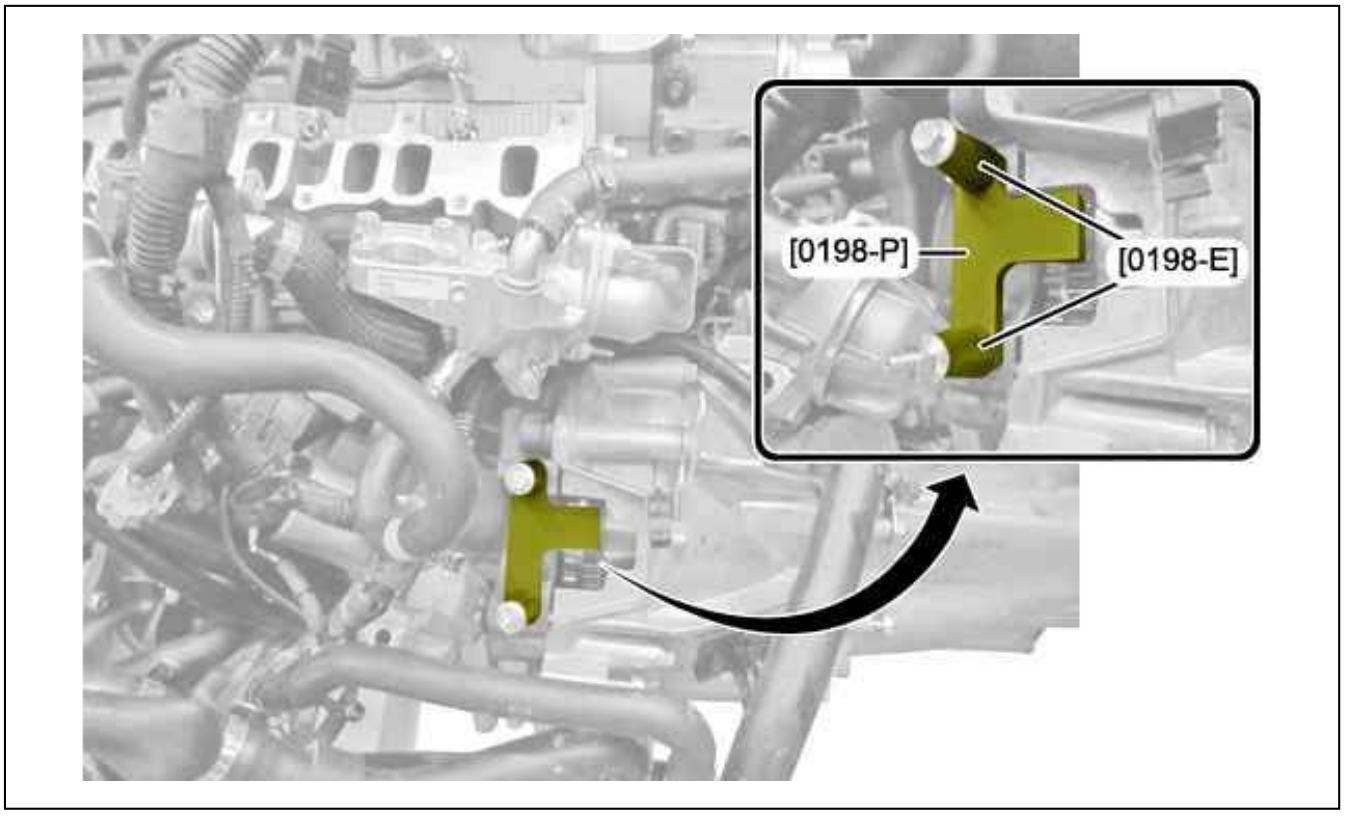

Figure : B1BG2YHD

Position the tools [0198-P], [0198-E].
Secure the assembly using the starter motor bolts.

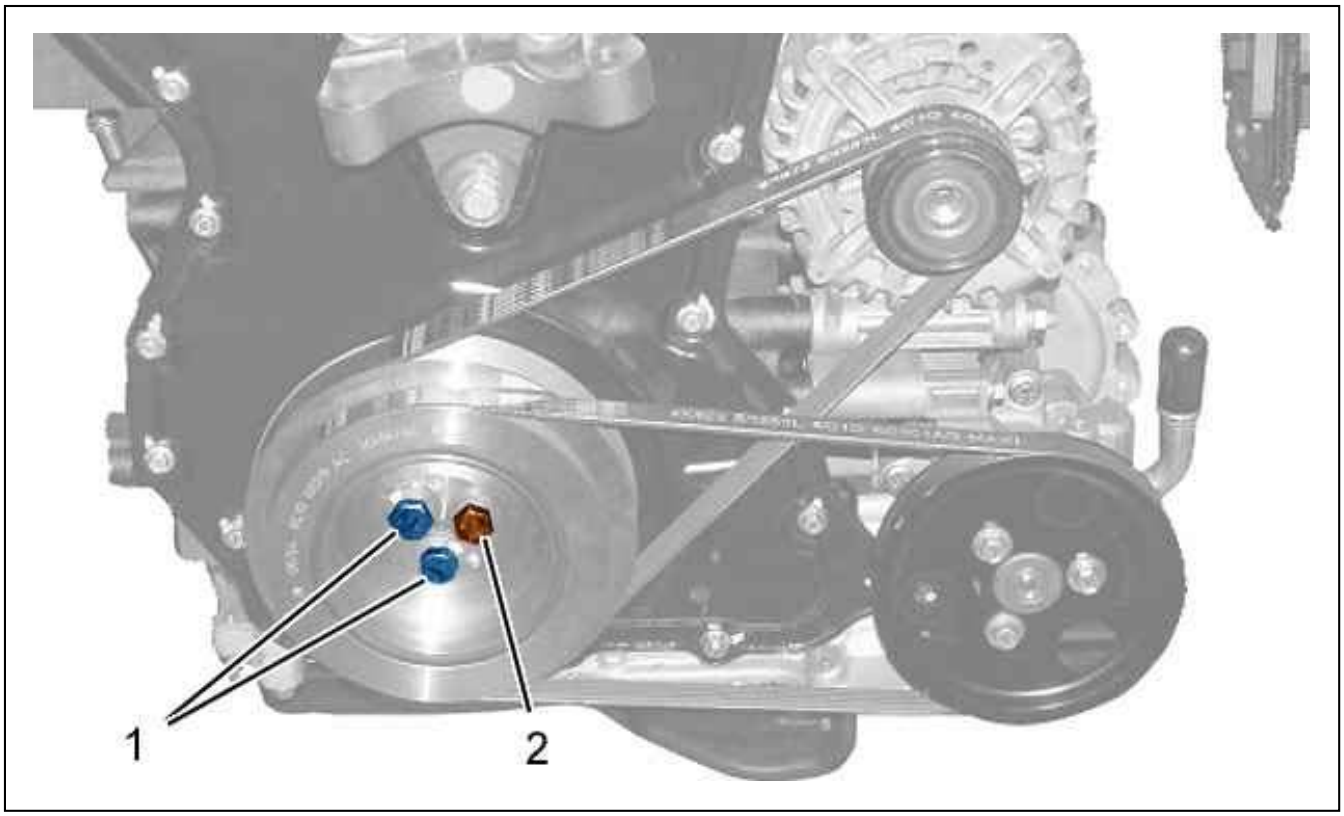

Figure : B1BPSHAD

Remove the accessories drive pulley fixing bolts (1).
Slacken the fixing bolt (2) of the ancillary drive pulley by 2 cm.

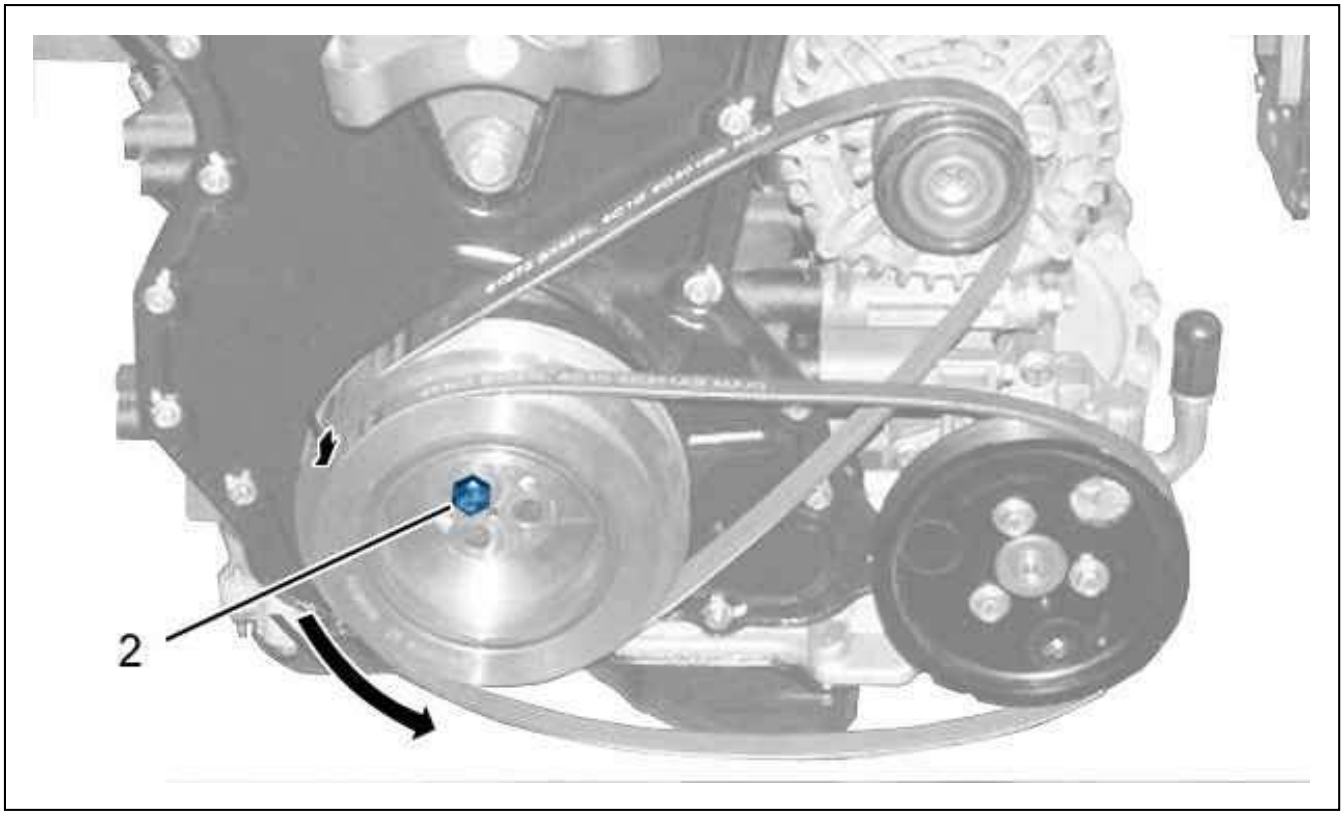

Figure : B1BPSHBD

Move aside the ancillary drive pulley, pivoting it on the fixing bolt (2).

CAUTION : Mark the direction of fitting of the accessories drive belts if they are to be reused.

Remove the accessory drive belts.

2.2. Vehicle with air conditioning

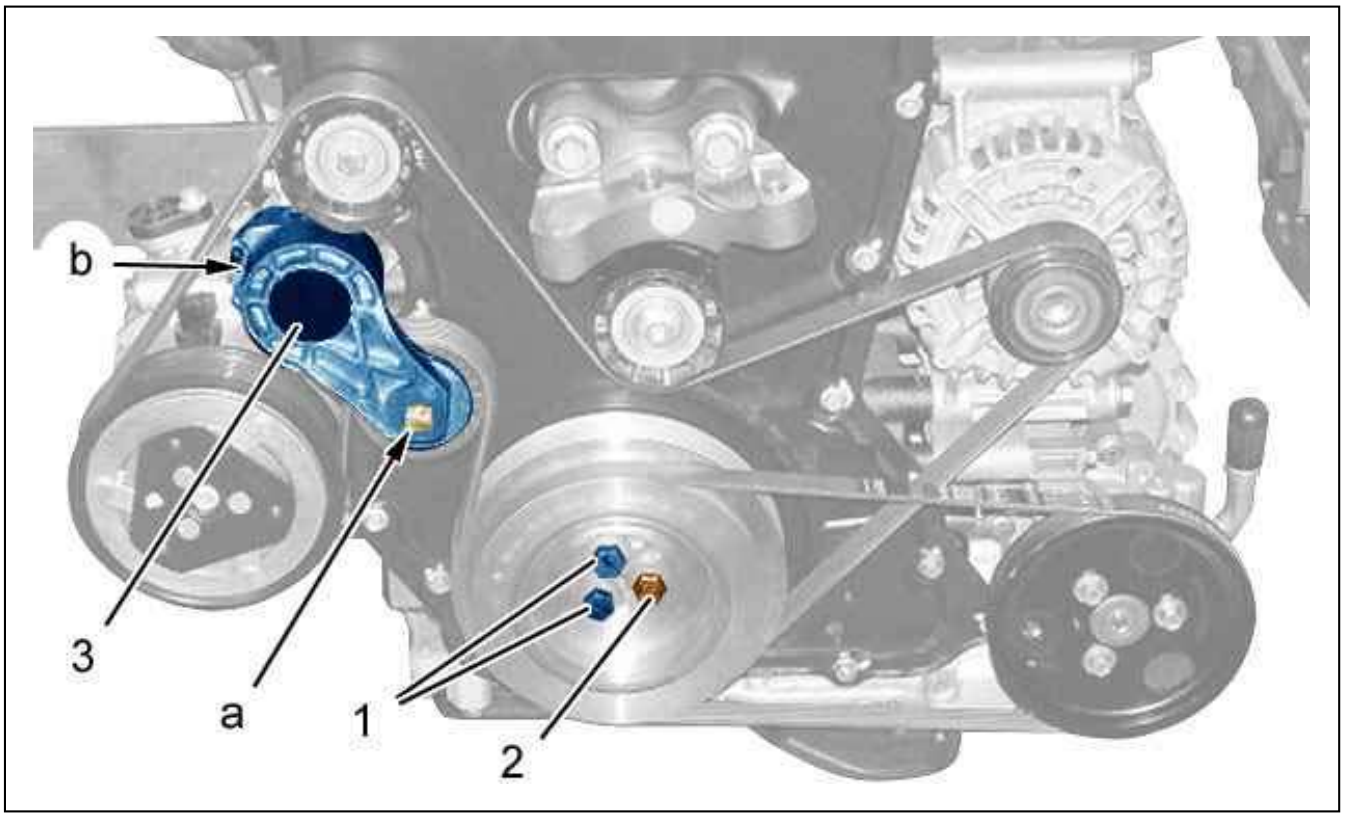

Figure : B1BPSHCD

Compress the dynamic roller tensioner (3) (as "a") (anti clockwise) ; Using tool [1608-E].
Peg (as "b") ; Using tool [0188-Q1].
Remove the accessories drive pulley fixing bolts (1).
Slacken the fixing bolt (2) of the ancillary drive pulley by 2 cm.

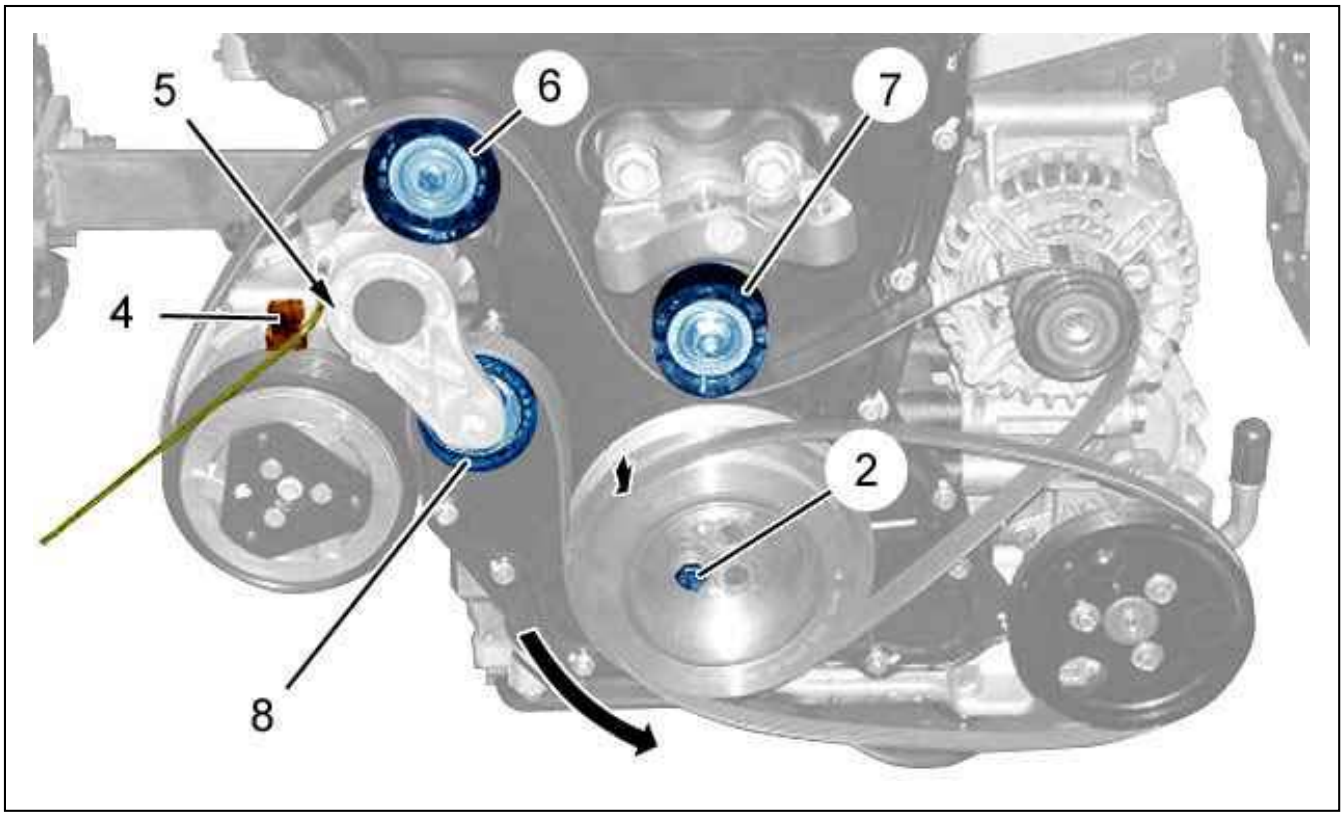

Figure : B1BPSHDD

CAUTION : Mark the direction of fitting of the accessories drive belts if they are to be reused.

Move aside the ancillary drive pulley, pivoting it on the fixing bolt (2).
Disconnect the air conditioning compressor connector (4); By means of a screwdriver.
Remove :

- The dynamic roller tensioner (3) fixing bolts (5)
- The dynamic roller tensioner (3)

CAUTION : Check that the rollers (6),(7) and (8) rotate freely (no play and no stiffness).

Remove the accessory drive belts.

3. Refitting

CAUTION : Adhere to the tightening torques .

CAUTION : Replace the torsional vibration damper double pulley for a distance travelled greater than or equal to 160000 km, when the accessories drive belt is replaced.

3.1. Vehicle with air conditioning

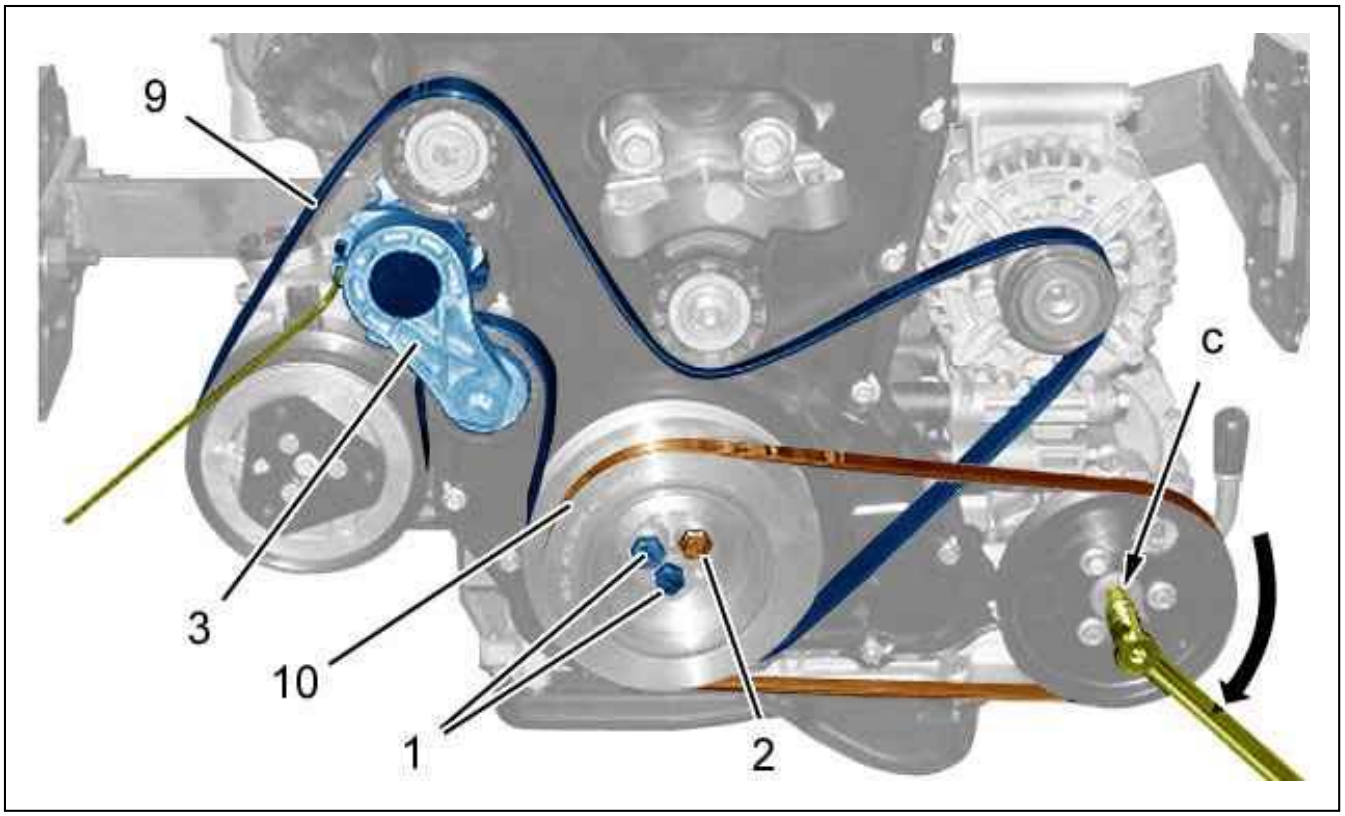

Figure : B1BPSHFD

CAUTION : Mark the direction of fitting of the accessories drive belts if they are to be reused.

CAUTION : Make sure that the ancillary drive belts (9) and (10) are correctly positioned in the grooves of the various ancillary drive pulleys.

Refit :

- The accessories drive belt (9) with the dynamic roller tensioner (3)
- The dynamic roller tensioner (3) fixing bolts (5)
- The accessories drive belt (10)

Turn the power steering pump pulley ; Using a spanner (as "c") (In the direction of the arrow).
Guide the accessories drive pulley by hand.
Maintain the effort (as "c") (In the direction of the arrow).
Refit the fixing screws (1).
Tighten the fixing bolts (1), (2) to the correct torque.
Remove the spanner (as "c").

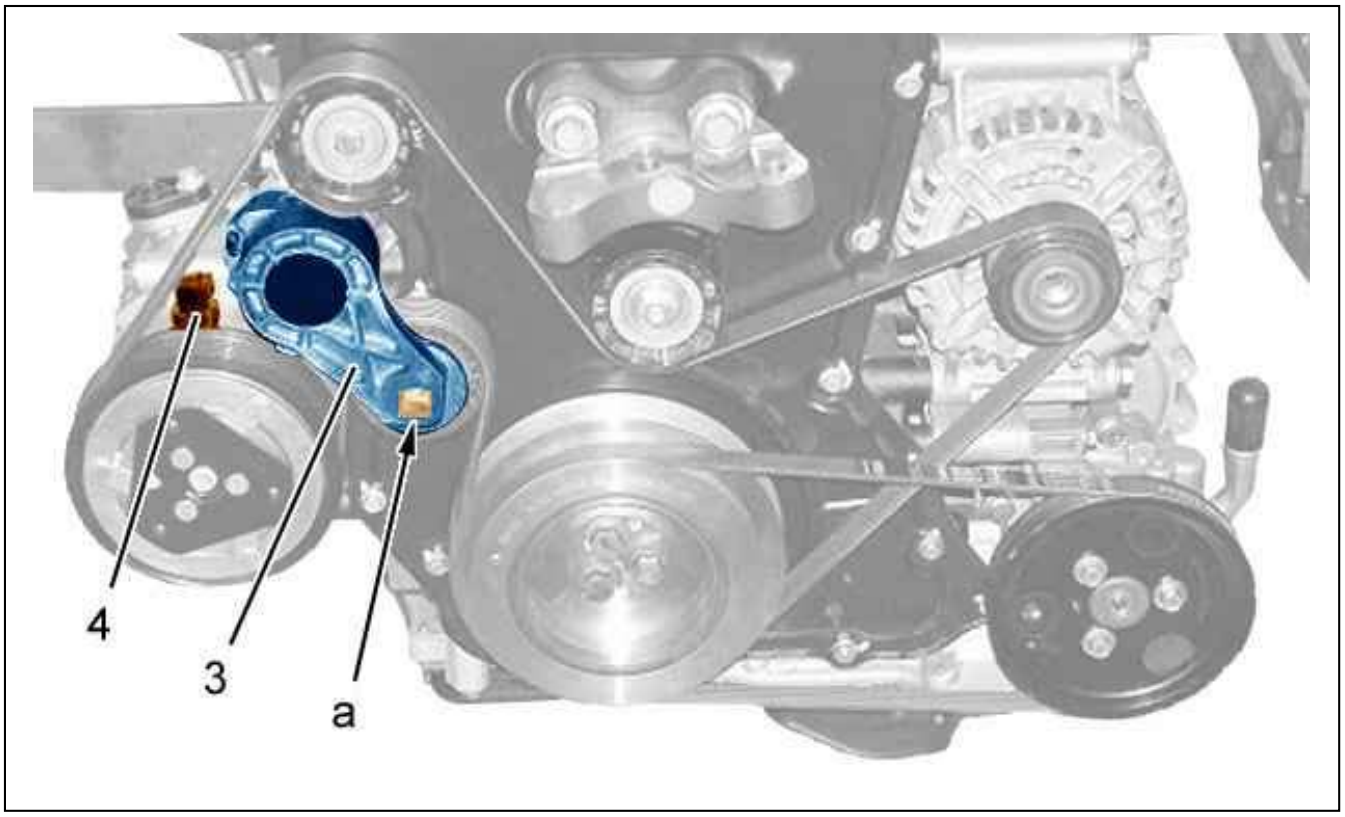

Figure : B1BPSHGD

Compress the dynamic roller tensioner (3) (as "a") (anti clockwise) ; Using tool [1608-E].
Remove the tool [0188-Q1].
Connect the air conditioning compressor connector (4).

3.2. Common operations

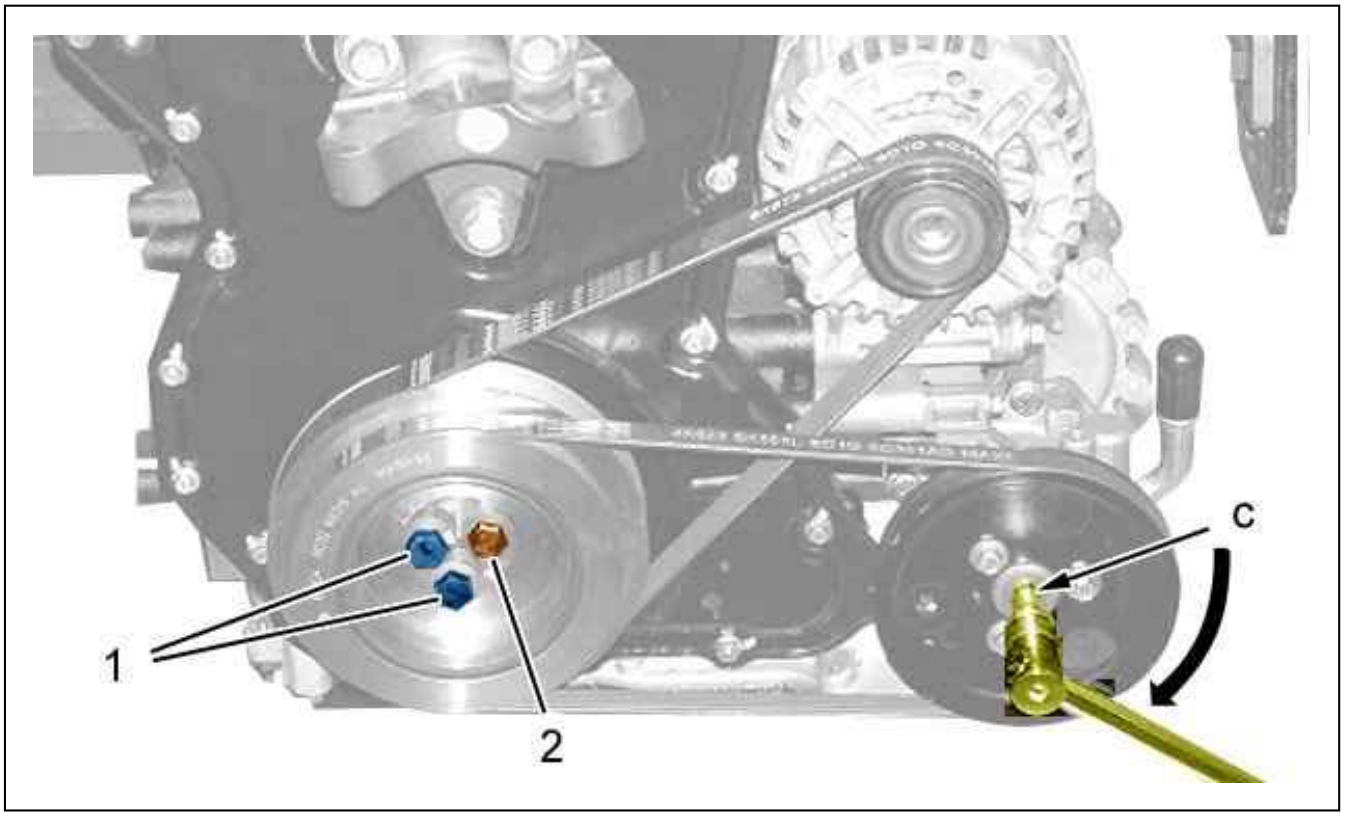

Figure : B1BPSHED

CAUTION : Mark the direction of fitting of the accessories drive belts if they are to be reused.

CAUTION : Always make sure that the ancillary drive belts are correctly positioned in the grooves of the various ancillary drive pulleys.

Refit the accessories drive belts .
Turn the power steering pump pulley ; Using a spanner (as "c") (In the direction of the arrow).
Guide the accessories drive pulley by hand.
Maintain the effort (as "c") (In the direction of the arrow).
Refit the fixing screws (1).
Tighten the fixing bolts (1), (2) to the correct torque.
Remove the spanner (as "c").
Remove the tools [0198-P], [0198-E].
Refit the starter .

4. Verification

Remove one accessories drive pulley fixing bolt .
Set the gearbox in neutral.

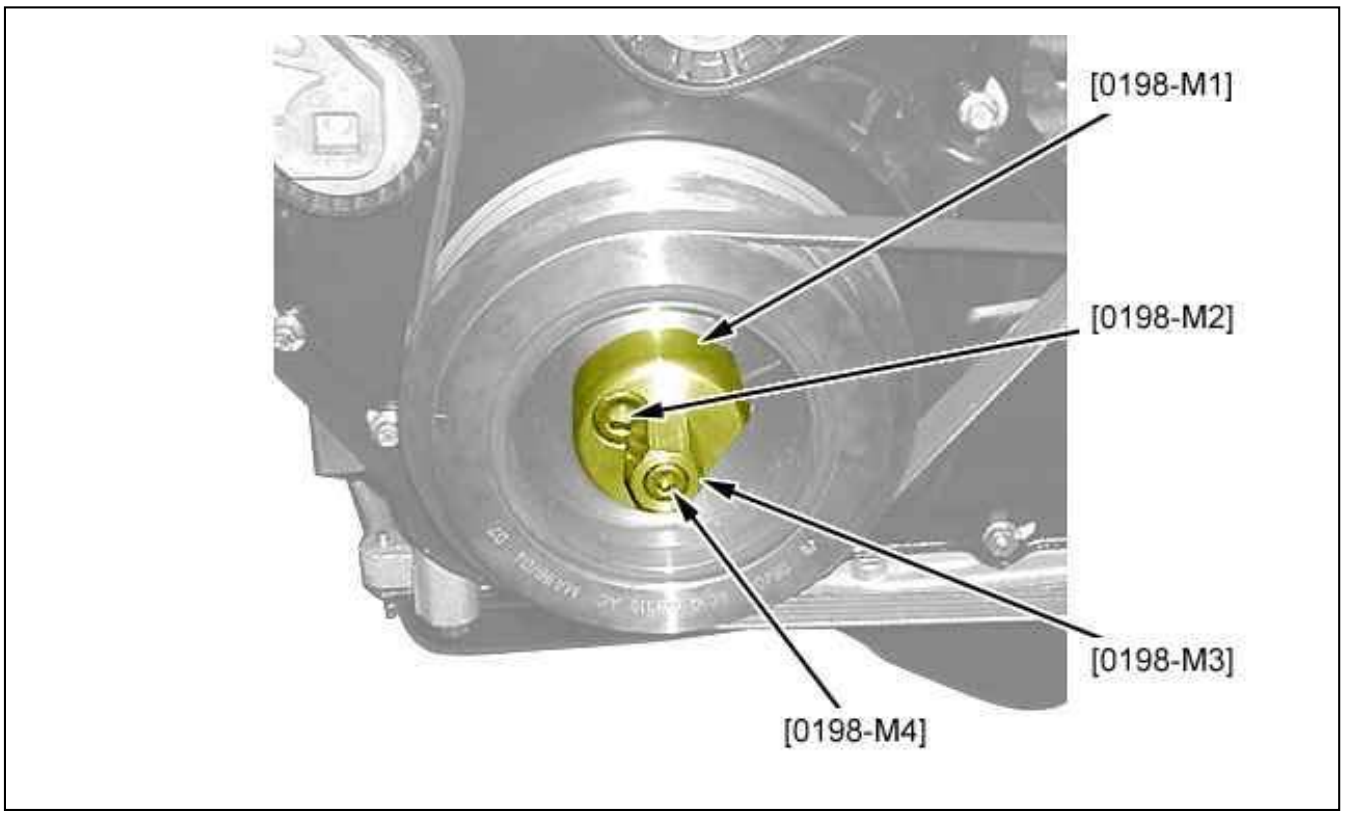

Figure : B1BG1DUD

Fit the tool [0198-M1].
Secure the tool [0198-M1] ; Using the screws [0198-M2].
Fit the tool [0198-M3].
Tighten the bolt [0198-M4] .
Rotate the crankshaft clockwise ; Check that the accessories drive pulley is not warped.
Engage 1st gear.
Remove the tools [0198].

Refit the fixing bolt of the ancillary drive pulley ; Tighten to the specified torque.
Refit :

- The protection plates under the engine
- The front right wheel

CAUTION : Perform the operations to be carried out following reconnection of the battery.

Reconnect the battery negative terminal.

REMOVING - REFITTING : ENGINE - GEARBOX

ESSENTIAL : Observe the safety and cleanliness recommendations .

1. Tooling

Tools	Reference	Designation
 Figure : E5AB0OGT	[0004]	lifting bench
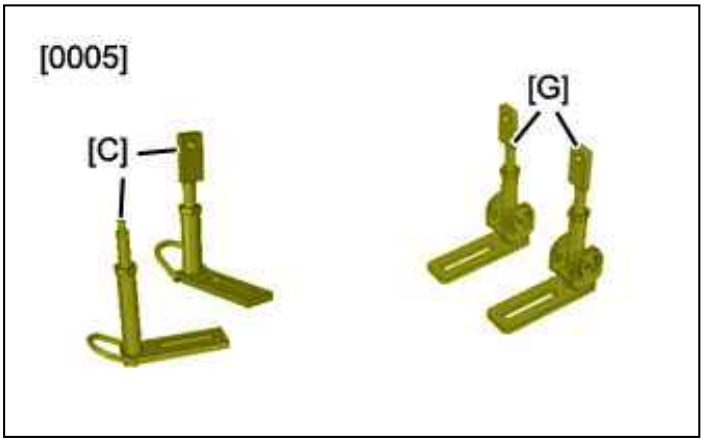 Figure : E5AB0EJT	[0005-C]	set of retaining supports
	[0005-G]	set of retaining supports
	[0188-T]	Set of plugs

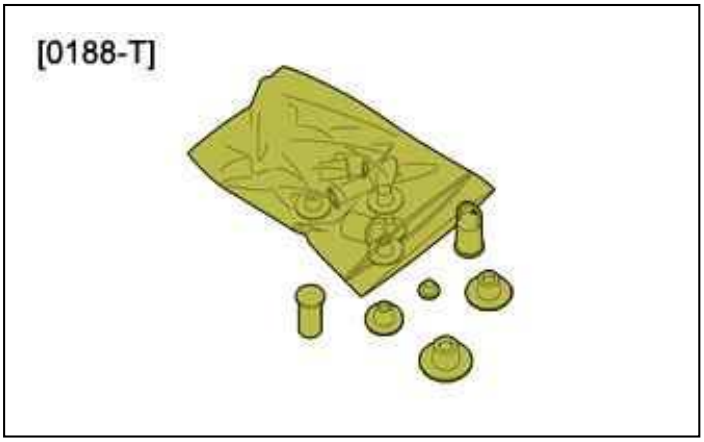

Figure : E5AB06IT

2. Removing

ESSENTIAL : Respect the safety and cleanliness recommendations that are specific to high pressure diesel injection (HDi) engines .

Disconnect the battery.
Place the vehicle on a 2-post lift.
Drain :

- The engine cooling system
- The gearbox

Remove :

- The central section of the lower front panel
- The right-hand headlamp
- The front wheels
- The protection plates under the engine
- The drive shafts
- The pre-catalytic converter

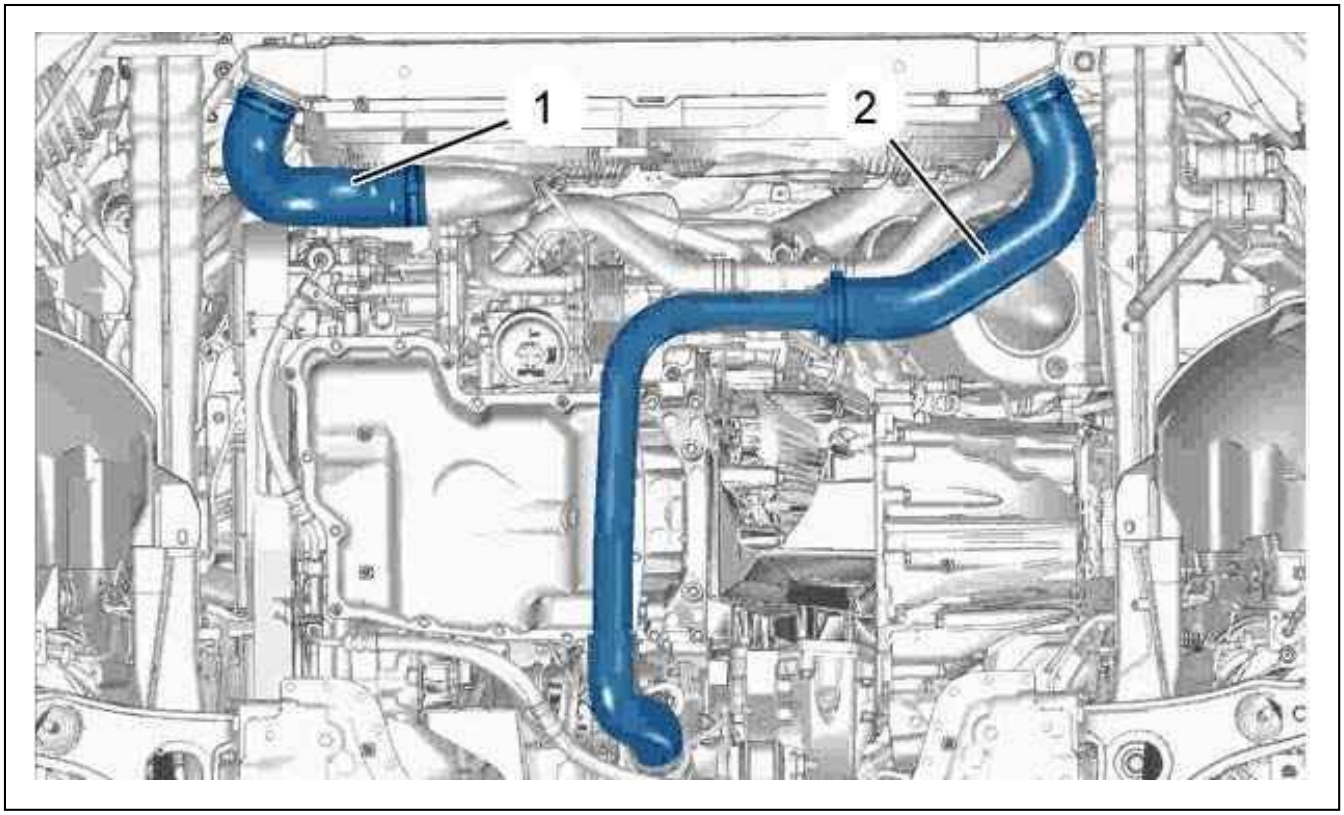

Figure : B1BG2YYD

Uncouple :

- The turbocharging air cooler air outlet hose (1)
- The turbocharger air outlet pipe (2)

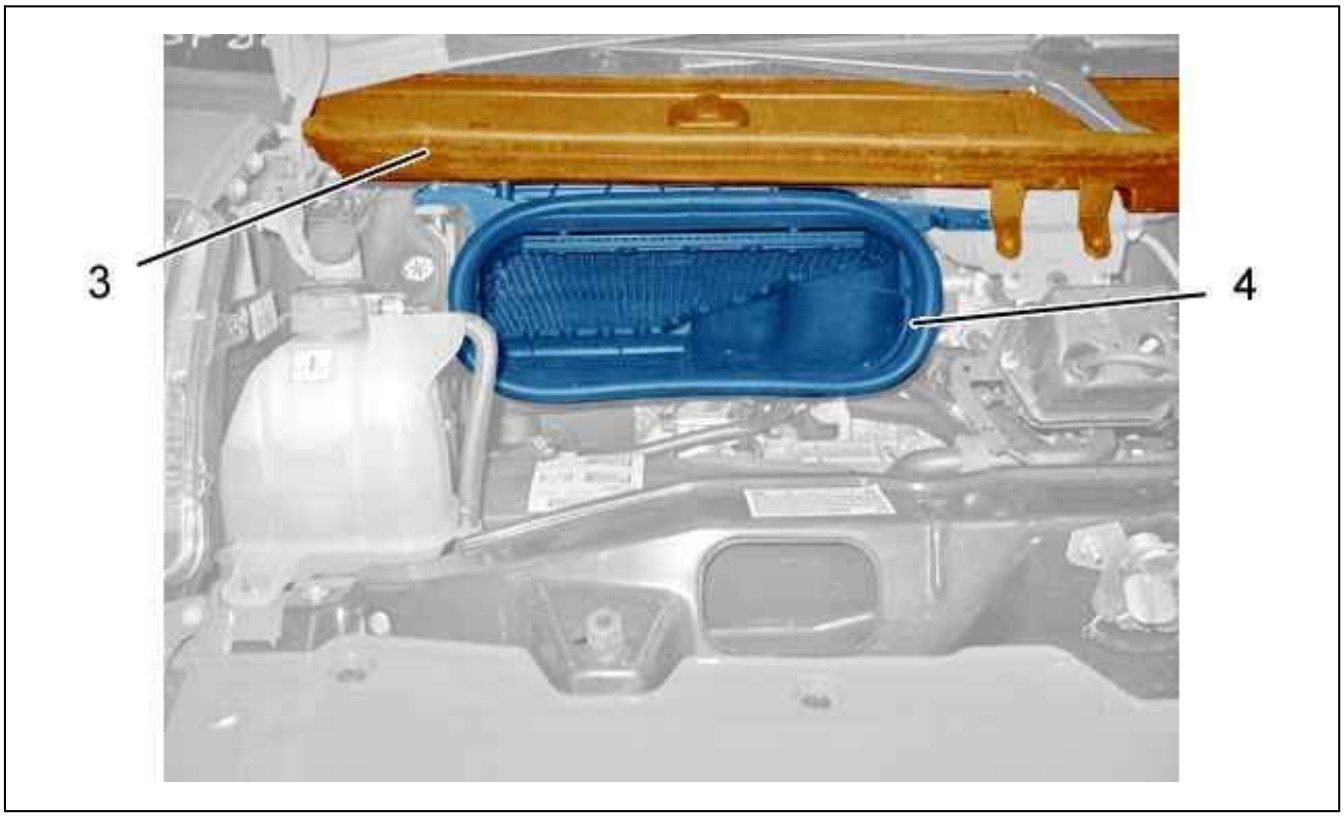

Figure : B1BG2YZD

Carefully lift the scuttle panel (3).
Remove the air intake (4).

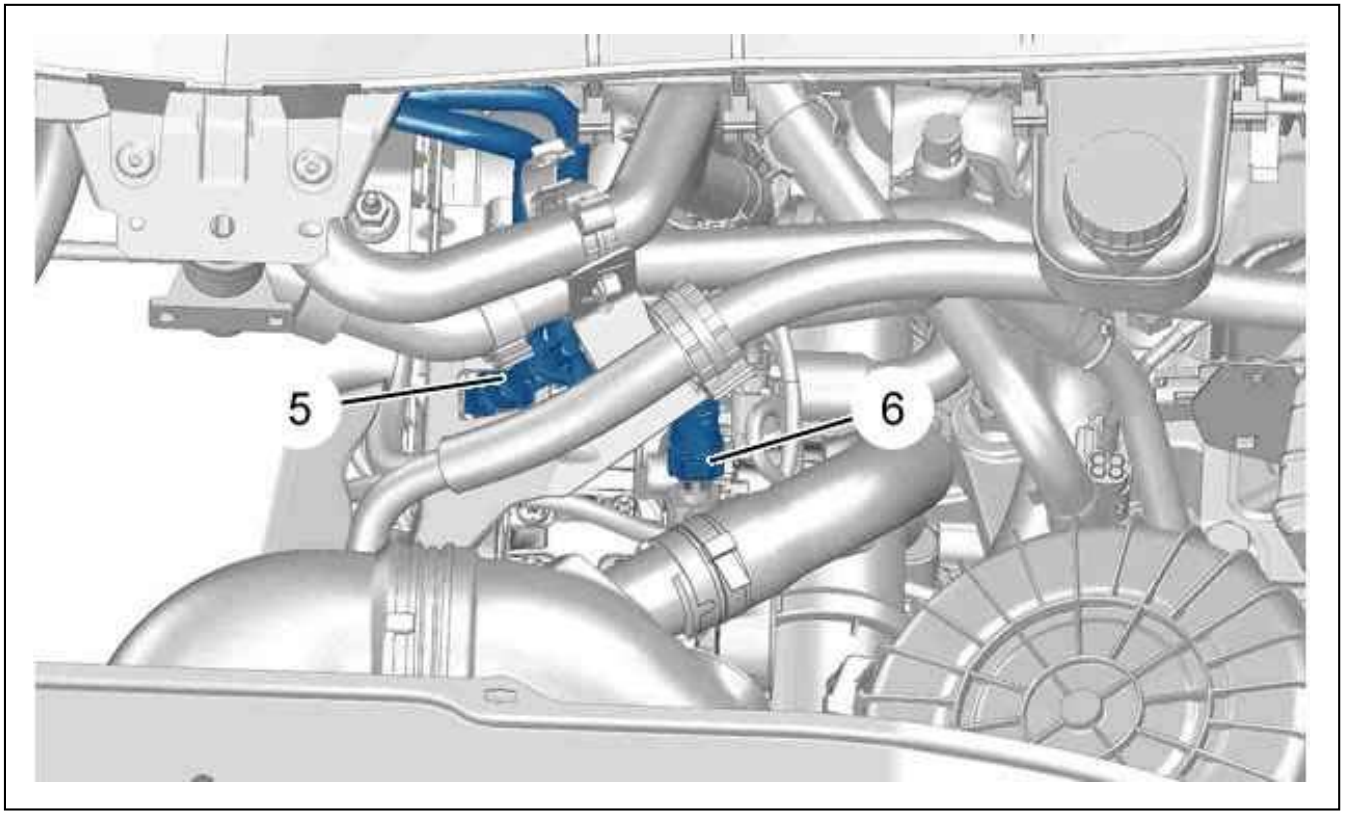

Figure : B1BG2Z0D

Uncouple : The fuel supply and return pipes (5), (6).
Close : The fuel supply and return pipes (5), (6) ; Using tool [0188-T].

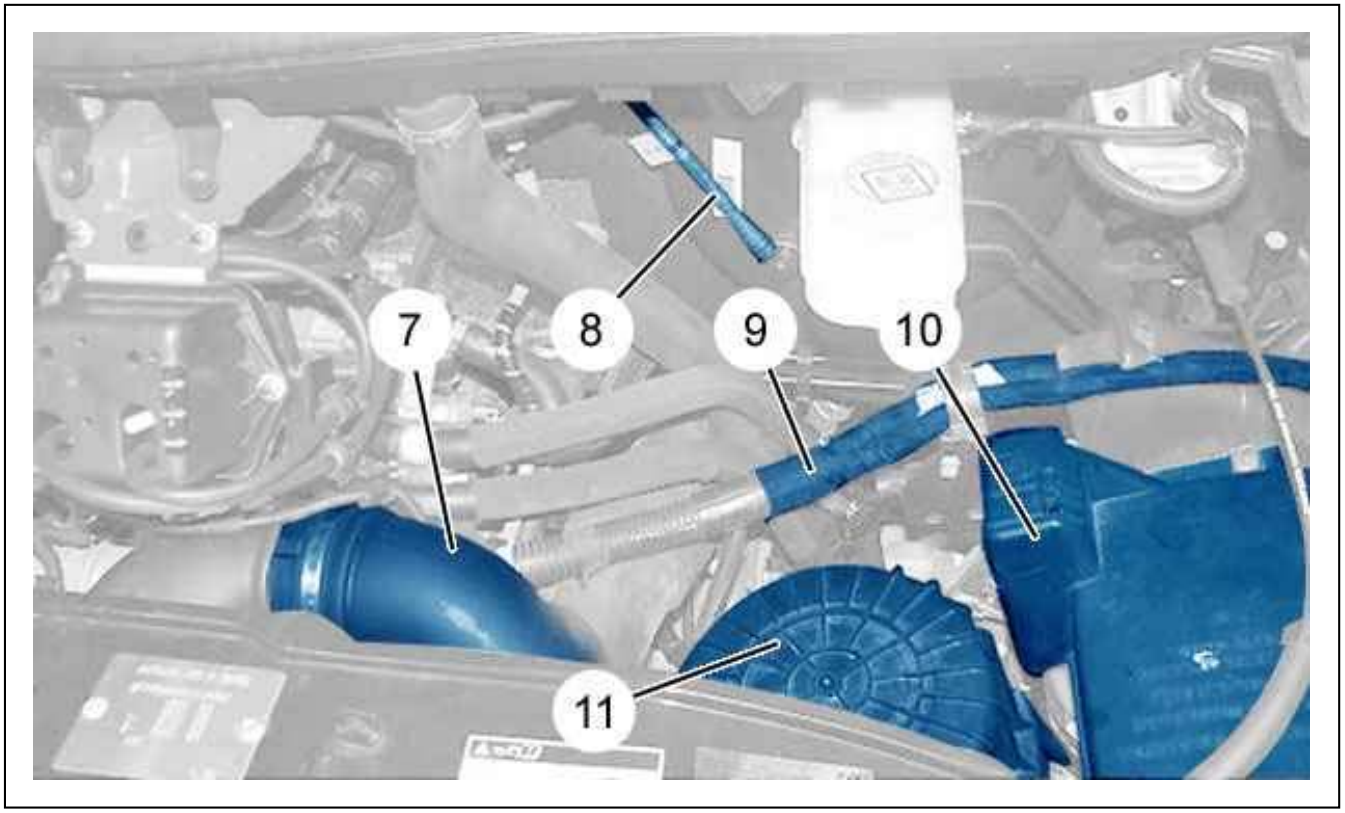

Figure : B1BG2Z1D

Remove : The braking assistance pipe (8).
Close : The braking assistance pipe (8) ; Using tool [0188-T].
Remove :

- The clips (Electrical harness (9))
- The cover (10)
- The air filter housing (11)
- The air duct (7)

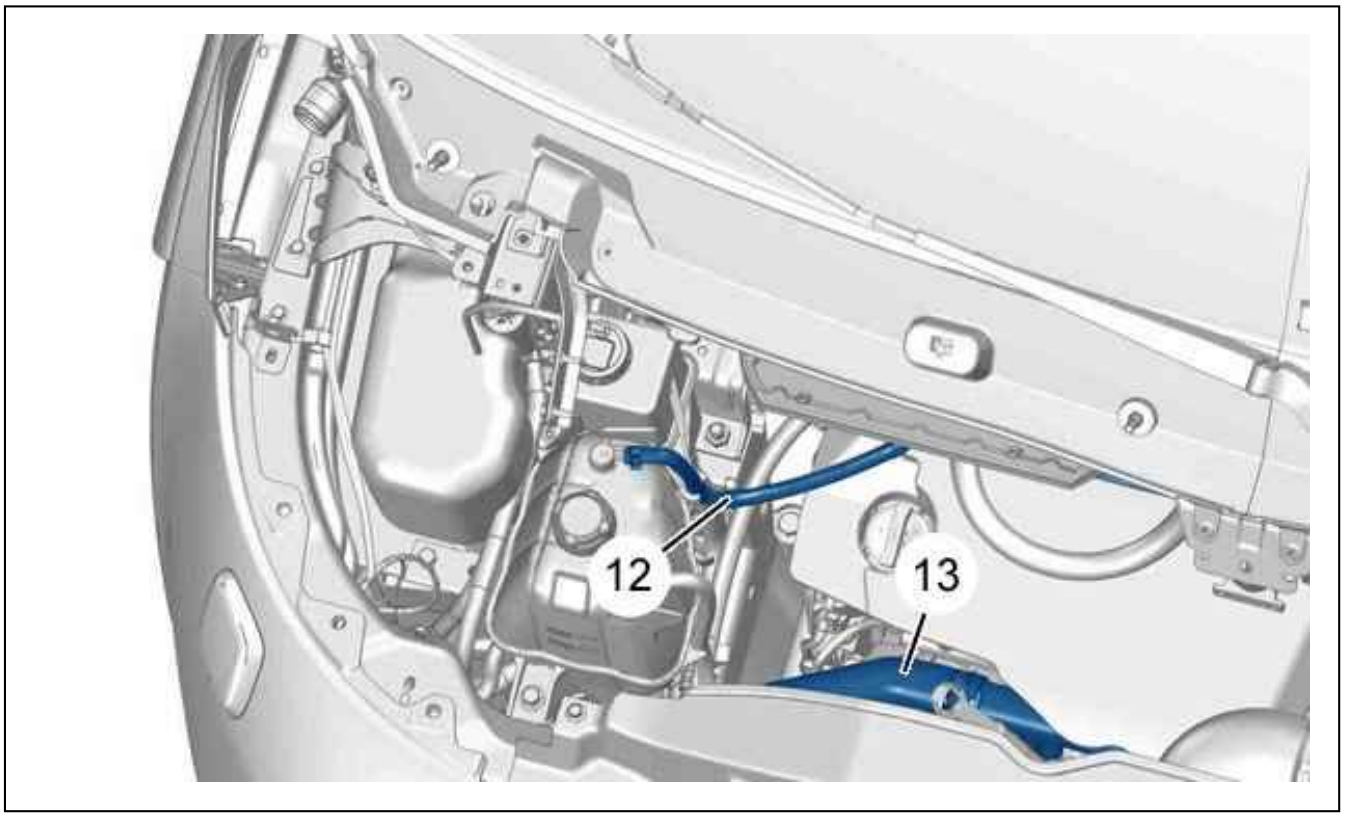

Figure : B1BG2Z2D

Release : The expansion bottle pipe (12).
Uncouple : The radiator top hose (13).

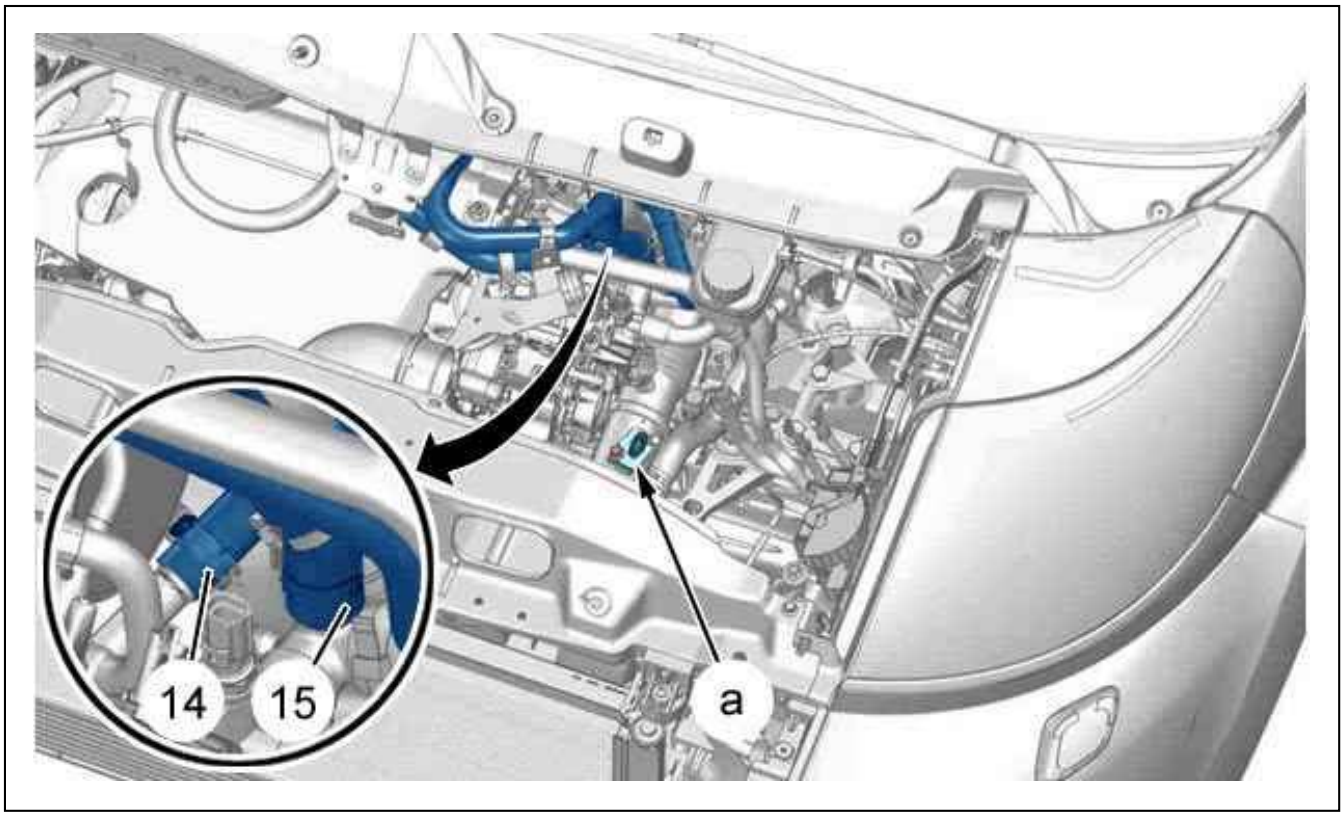

Figure : B1BG2Z3D

Disconnect the air flowmeter (at "a").
Uncouple : The heater matrix inlet and outlet hoses (14), (15).

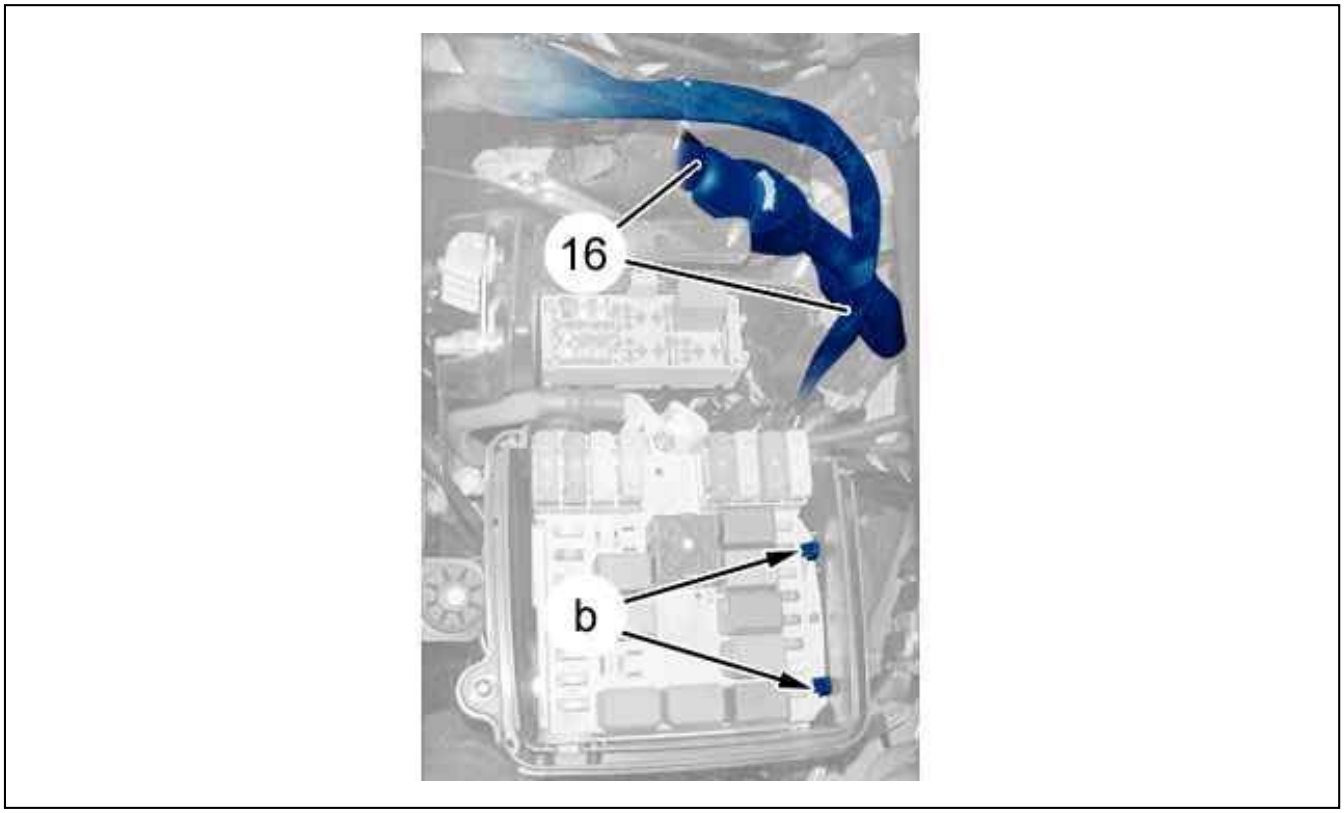

Figure : B1BG2Z4D

Remove the cover of the fuse box .

Unclip and detach The fuse box (at "b").
Disconnect the electric harnesses (16).

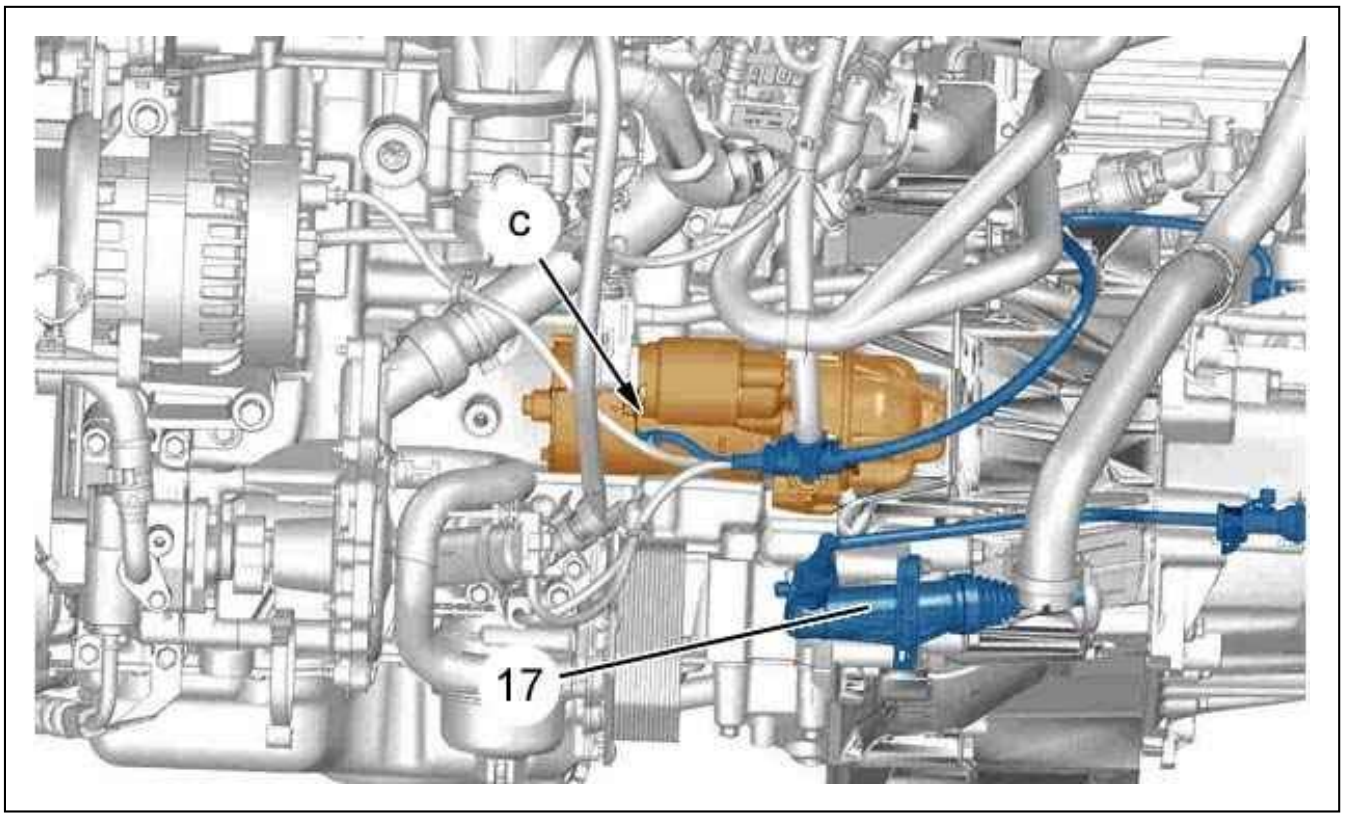

Figure : B1BG2Z5D

Detach and move aside : The hydraulic clutch control (17).
Disconnect the starter supply at "c".
Detach : The gear control and selection cables .
Move aside and suspend the power steering pump .
Move aside and suspend the air conditioning compressor on the side of the vehicle (Without opening the cooling circuit) (according to equipment).

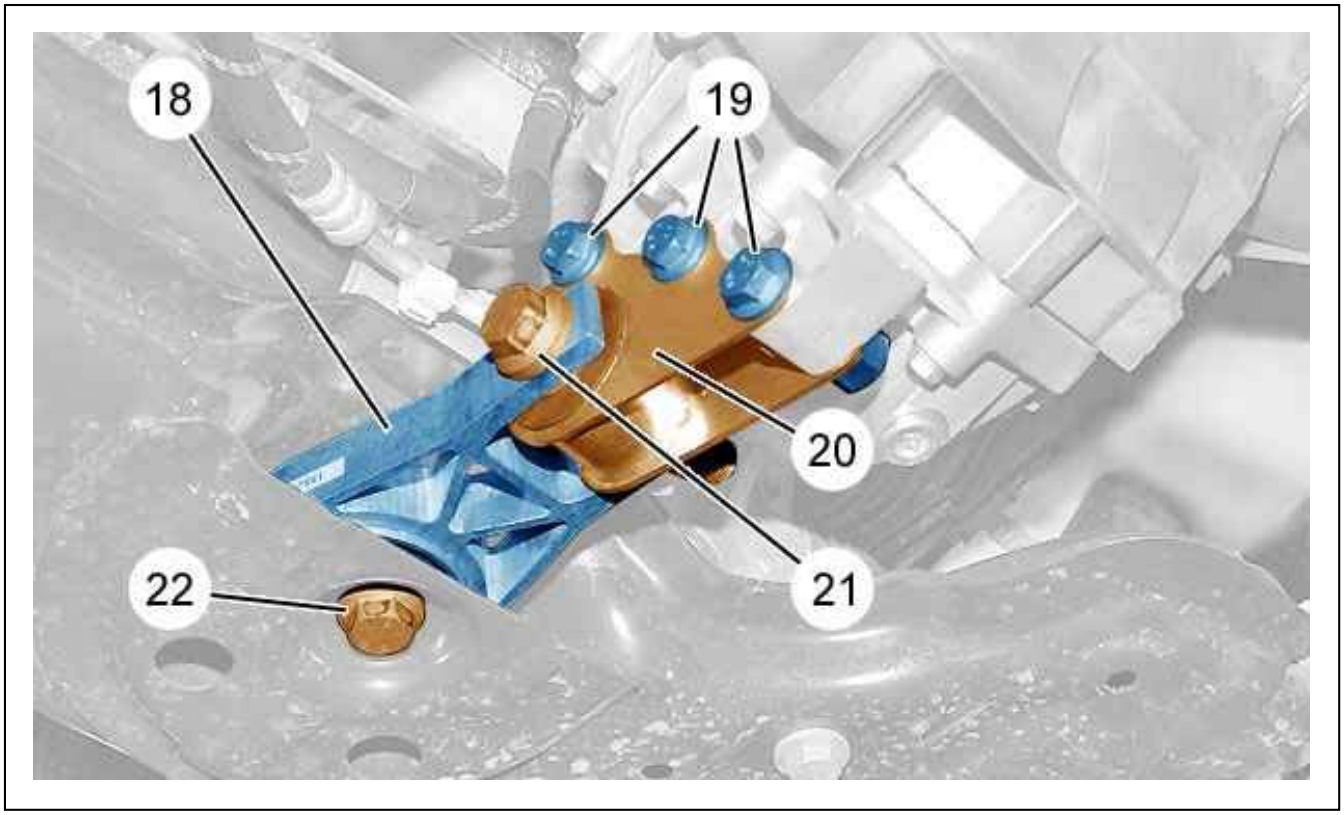

Figure : B1BG2Z6D

Remove :

- The bolt (21)
- The bolts (19)
- The bracket (20) (Reaction rod (18))
- The bolt (22)
- The reaction link (18)

Introduce the lifting table [0004] with its brackets [0005-C], [0005-G] under the engine.
Lift the elevating platform [0004].

2.1. Turbo side

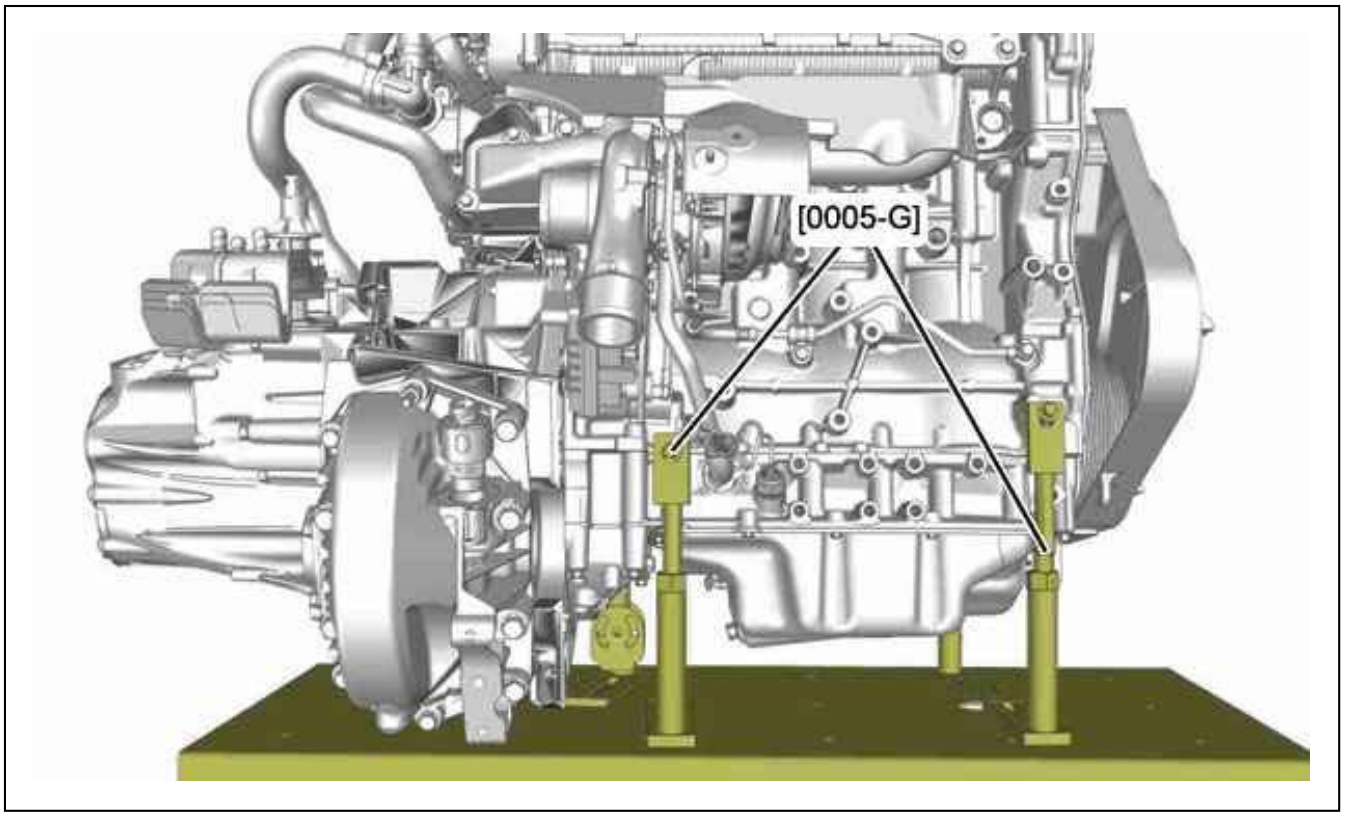

Figure : B1BG2Z7D

Position :

- One support [0005-G] on the turbocharger outlet pipe fixing
- Another support [0005-G] on the air conditioning compressor fixing

2.2. Oil filter side

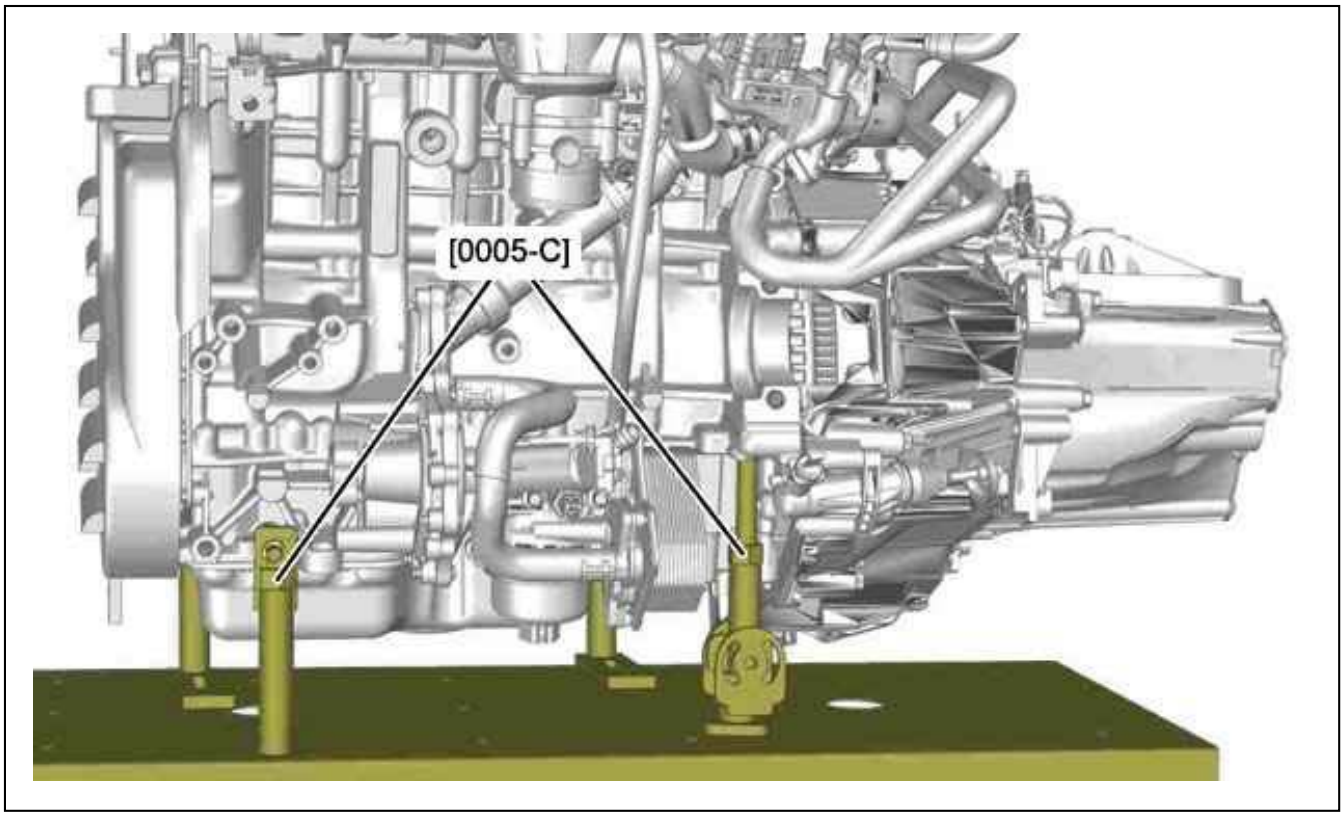

Figure : B1BG2Z8D

Position :

- One support [0005-C] on a power steering pump fixing
- Another support [0005-C] in the engine cylinder block blind hole

2.3. Removing (continued)

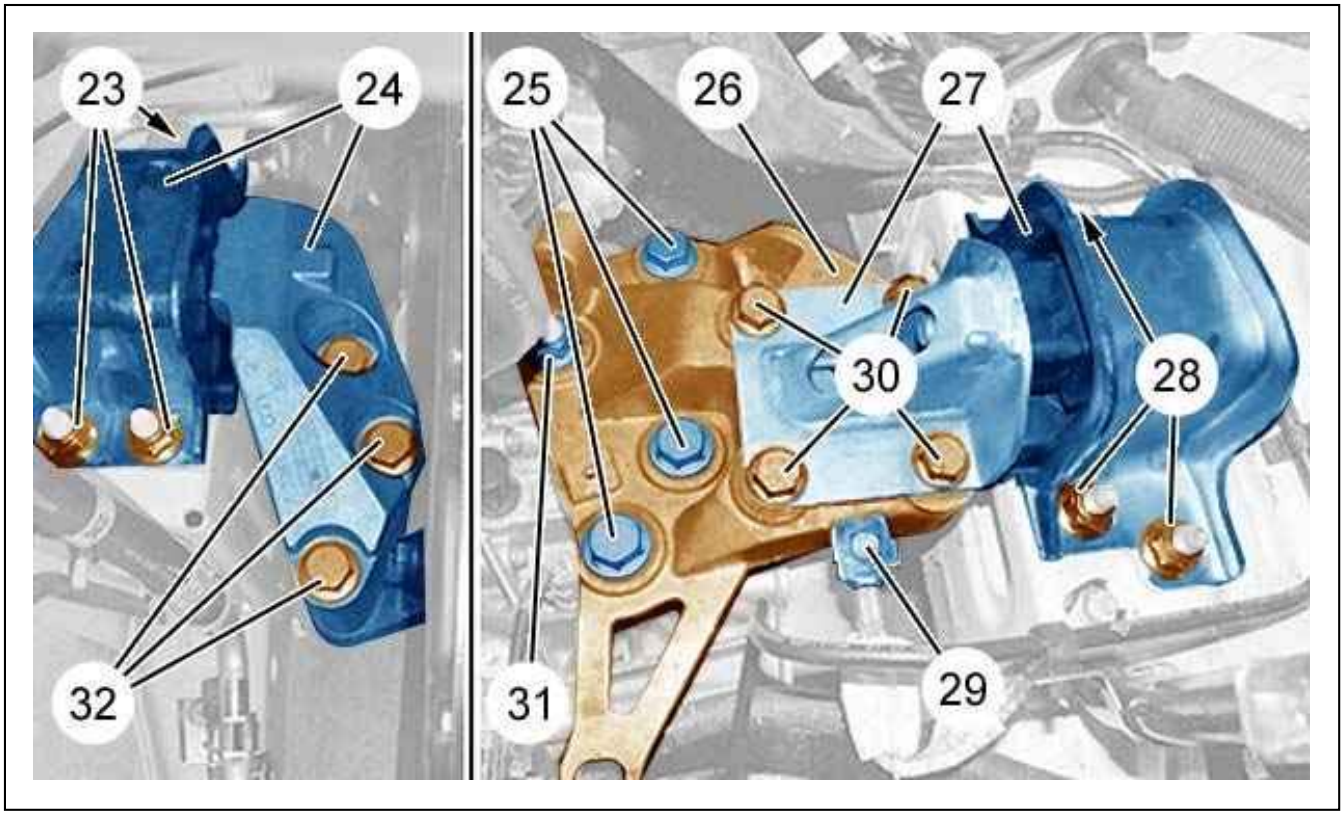

Figure : B1BG2Z9D

Remove :

- The nuts (23), (31), (28)
- The bolts (32), (25), (30)
- The engine mounting (24)
- The engine mounting (27)
- The earth braid (29)
- The engine mounting (26)

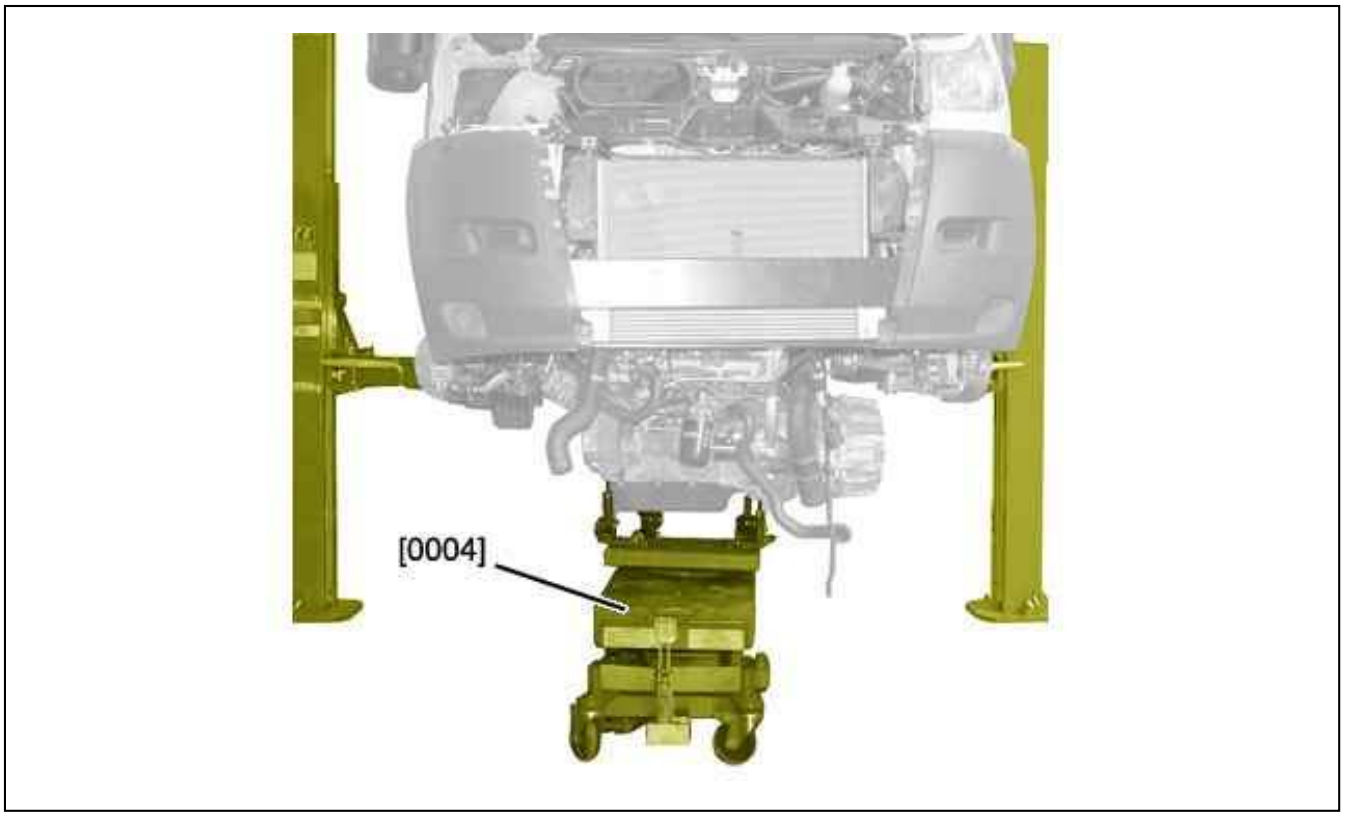

Figure : B1BG2CXD

CAUTION : Ensure that there is no fouling between the engine-gearbox assembly and the body.

Slowly lower the engine and gearbox assembly ; Using the lifting table [0004].
Manoevre the engine-gearbox assembly to facilitate removal.
Remove the power unit assembly (from below).
Move the engine-gearbox assembly away from under the vehicle.

3. Refitting

CAUTION : Adhere to the tightening torques.

Tightening torques : Transmission .
Tightening torques :

- Exhaust system
- Manual gearbox
- engine
- Engine/gearbox mountings

Place the engine/gearbox assembly on the hydraulic table [0004].

CAUTION : Ensure that there is no fouling between the engine-gearbox assembly and the body. Manoevre the engine-gearbox assembly to facilitate its repositioning.

Position the engine-gearbox set ; Using tool [0004] (from underneath the vehicle).
Refit :

- The engine mounting (26)
- The earth braid (29)
- The engine mounting (27)

- The engine mounting (24)
- The bolts (32), (25), (30)
- The nuts (23), (31), (28)

Unclamp the power unit assembly from the lifting table [0004].
Withdraw the lifting bench [0004] from under the vehicle.
Remove the tools [0005-C], [0005-G].
Refit :

- The reaction link (18)
- The (22) bolt
- The bracket (20) (Reaction rod (18))
- The bolts (19)
- The bolt (21)

Refit :

- The air-conditioning compressor (According to equipment)
- The power steering pump

Position and couple up :

- The gear control and selection cables
- The starter electrical supply (at "c")
- The hydraulic clutch control (17)

Reconnect the electrical harnesses (16).
Position : The fuse box (at "b").
Refit : The cover of the fuse holder unit .
Refit : The heater matrix inlet and outlet hoses (14), (15).
Reconnect the air flowmeter (at "a").
Remove the tool [0188-T] (Brake servo pipe (8)).
Refit :

- The radiator top hose (13)
- The expansion bottle pipe (12)
- The air duct (7)
- The air filter housing (11)
- The cover (10)
- The clips (Electrical harness (9))
- The braking assistance pipe (8)

Couple up : The fuel supply and return pipes (5), (6).
Refit : The air take-off (4).
Position : The scuttle (3).
Remove the tools [0188-T] (Fuel supply and return pipes (5), (6)).
Couple up :

- The turbocharger air outlet pipe (2)
- The turbocharging air cooler air outlet hose (1))

Refit :

- The pre-catalytic converter
- The drive shafts
- The front wheels
- The right-hand headlamp
- The central section of the lower front panel
- The protection plates under the engine

Fill and top up the level of the following of the following elements :

- engine
- Gearbox
- Cooling system

CAUTION : Perform the operations to be carried out following reconnection of the battery.

Reconnect the battery.
Switch on the ignition 10 times in succession over a period of 5 seconds, without starting the engine, this to prime the fuel circuit.
Start the engine.
Top up the coolant level (if necessary).
Return the vehicle to its wheels.
Carry out :

- A road test
- A reading of the diagnostic memories

PROHIBITED OPERATIONS : HDI DIRECT INJECTION SYSTEM

1. Cleaning

The use of a "high pressure" cleaner is prohibited.

2. Fuel supply system

Recommended fuel : Diesel.

3. Electrical circuit

Switching an injection ECU from one vehicle to another will make it impossible to start either vehicle.
Do not supply a diesel injector with 12 volts.

4. high pressure fuel pump

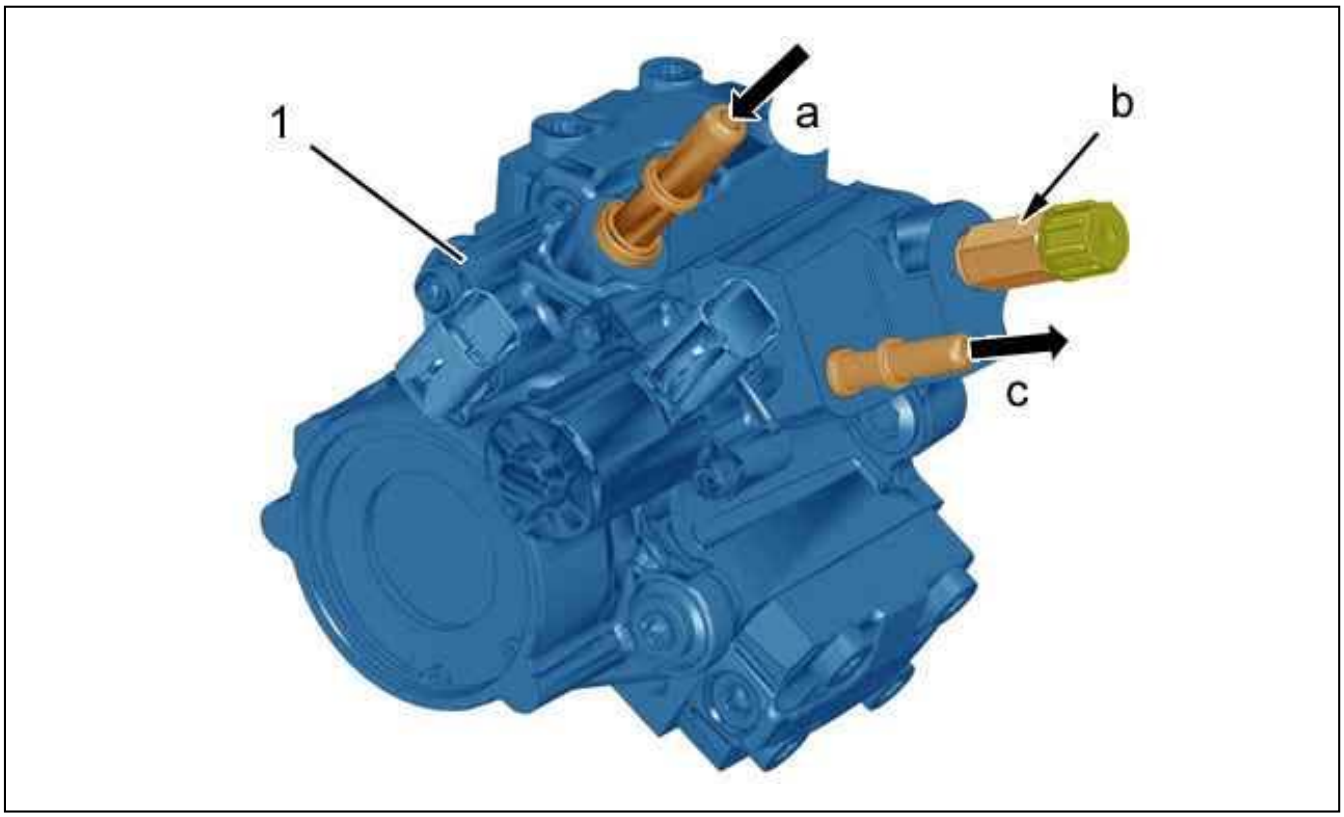

Figure : B1BK3YDD

Do not separate the following components from the fuel high pressure pump (1) :

- The high pressure outlet union "b" (malfunction)
- Fuel inlet "a"
- Fuel return "c"

5. Diesel injector

CAUTION : Cleaning operations using diesel and ultrasound are prohibited.

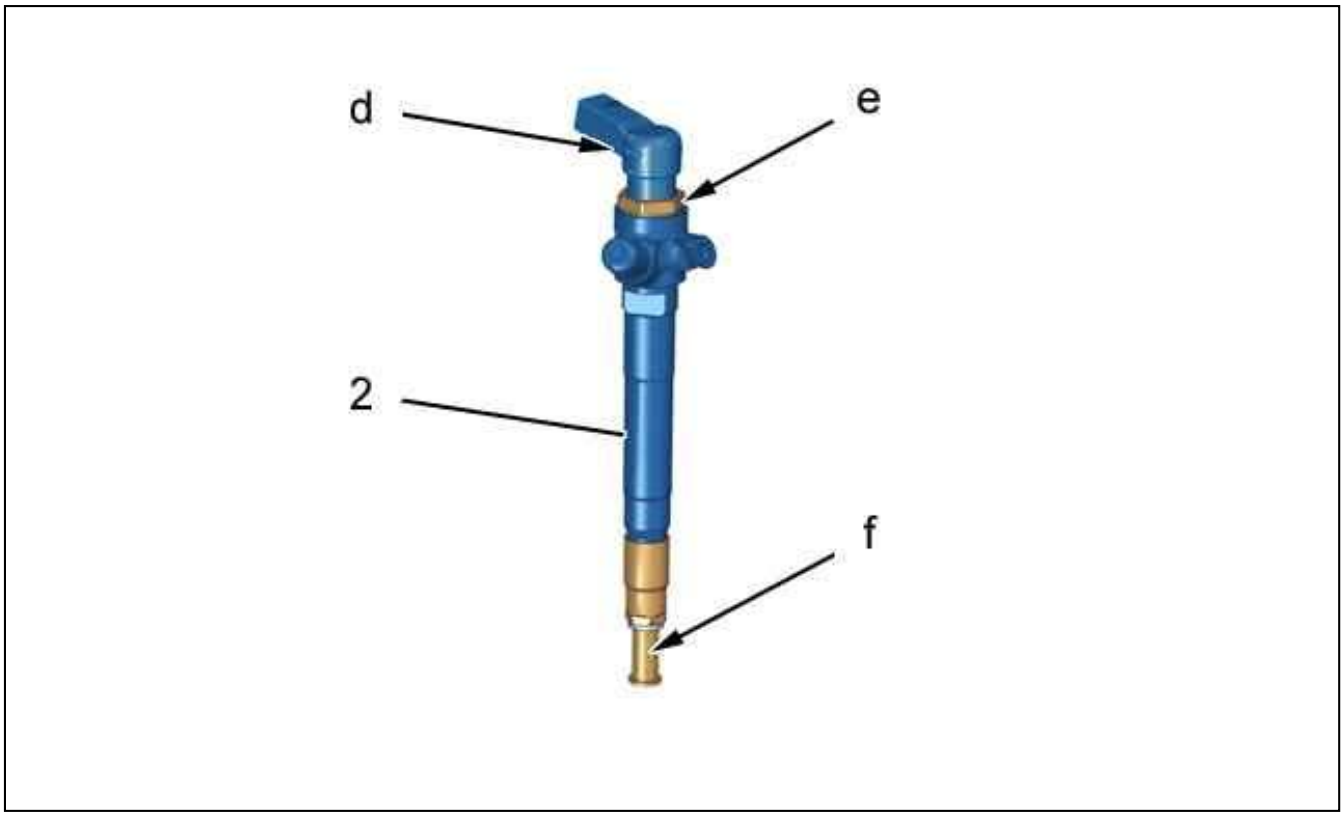

Figure : B1BK3YED

Do not separate the diesel injector body (2) from the following components :

- Diesel injector "f" (replacement parts not available)
- Electromagnetic element "d" (replacement parts not available)

Do not turn the nut "e" (malfunction).
Calamine cleaning on the injector nose is prohibited.

6. Fuel high pressure common injection rails

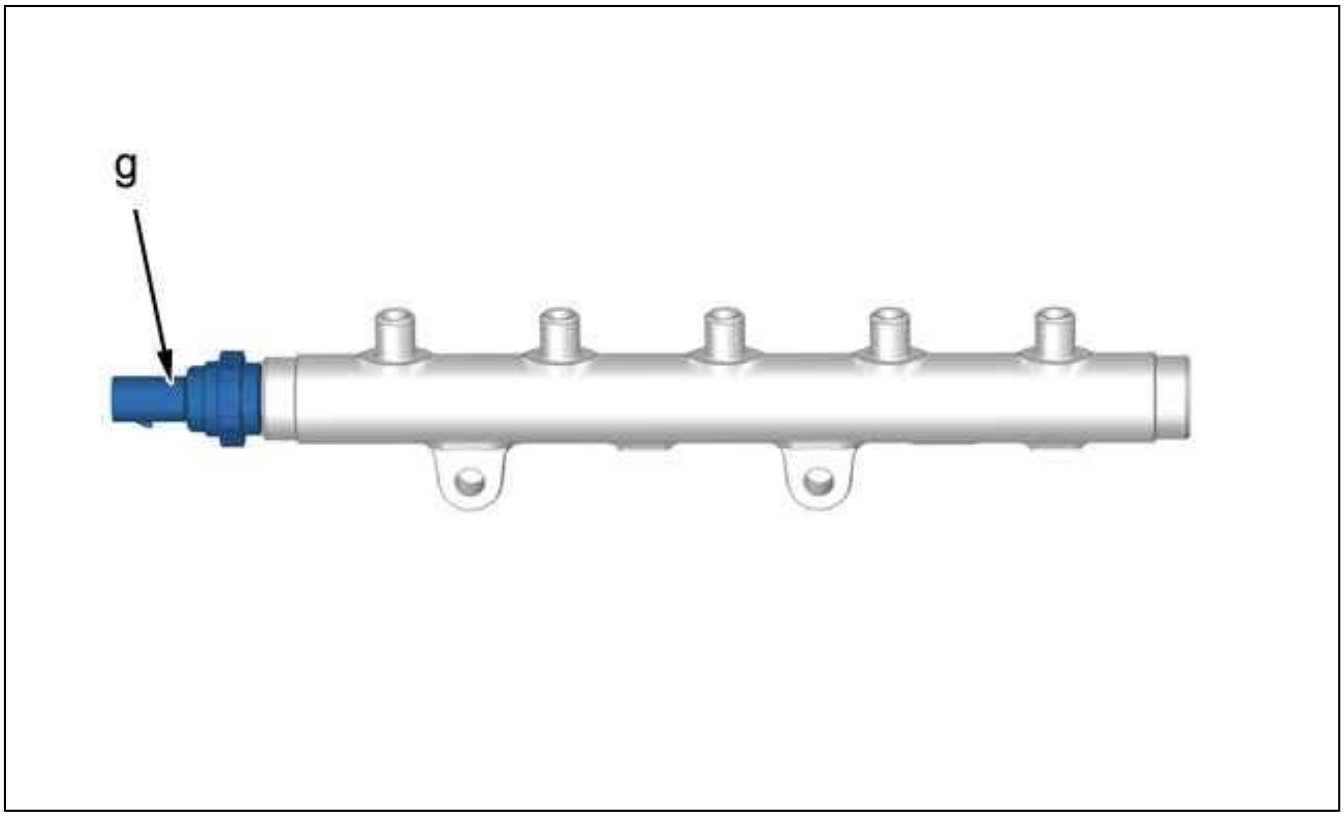

Figure : B1BK3YFD

Do not separate the fuel high pressure sensor ""g"" from the common injection rail (replacement parts not available).

PROHIBITED OPERATIONS : HDI DIRECT INJECTION SYSTEM BOSCH

1. Protection

CAUTION : Always plug the apertures straightaway after opening up the fuel circuit ; Using the specific plugs kit.

2. Cleaning

CAUTION : The use of a "high pressure" cleaner is prohibited.

CAUTION : Do not use compressed air.

3. Fuel supply system

Recommended fuel : Diesel.

CAUTION : Do not use fuel other than diesel (Risk of destruction of the injection system and of the engine).

CAUTION : The addition of additives such as fuel circuit cleaner/remetalliser, is prohibited.

4. Electrical circuit

Exchanging an engine management ECU between two vehicles makes it impossible to start the vehicles.

CAUTION : Do not supply a diesel injector with 12 volts.

5. high pressure fuel pump

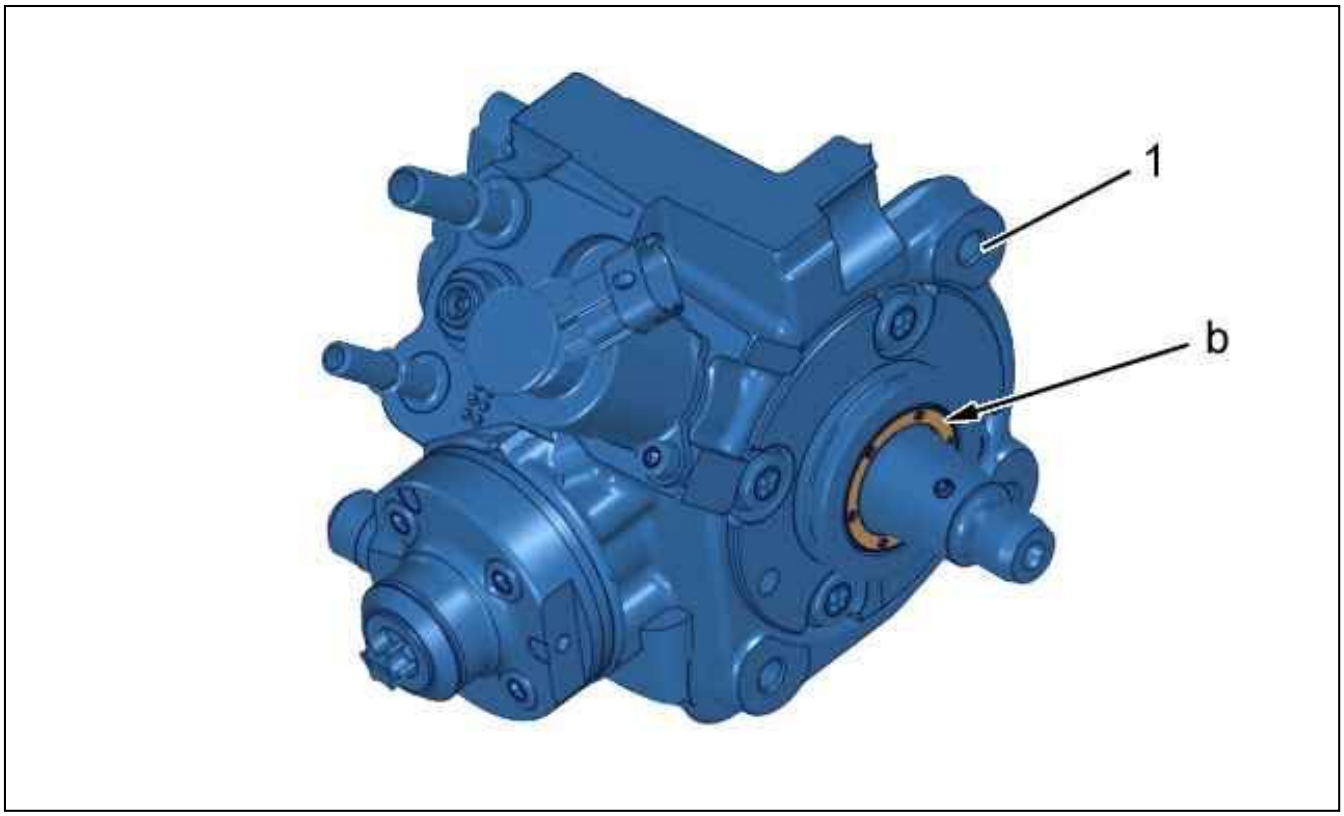

Figure : B1BK3YND

Do not separate the ring seal from the high pressure fuel pump (1) (at "b") (No replacement parts).

6. Diesel injector

CAUTION : Cleaning operations using diesel and ultrasound are prohibited.

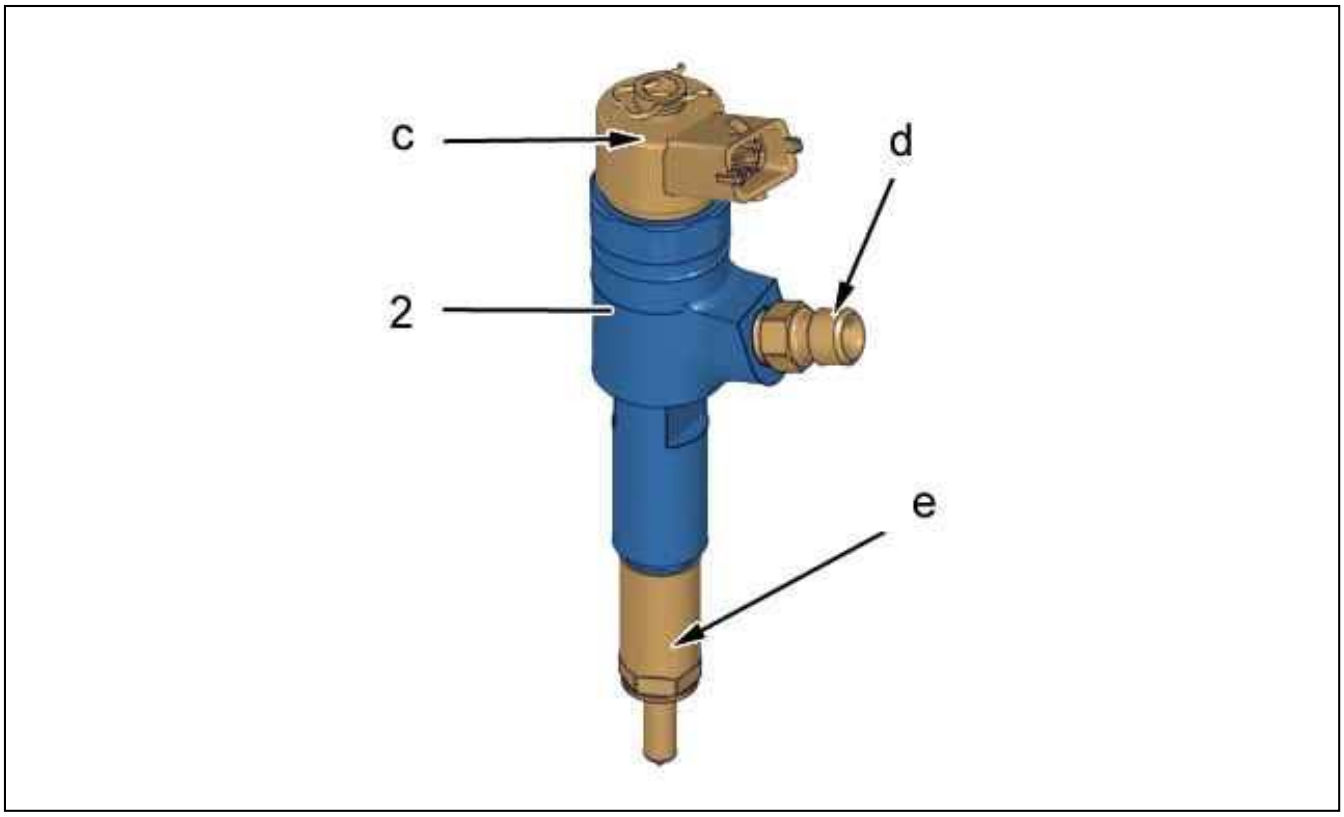

Figure : B1BK3YQD

Do not separate the diesel injector body (2) from the following components :

- High pressure union (at "d") (malfunction)
- Diesel injector (at "e") (replacement parts not available)
- Electromagnetic element (at "c") (replacement parts not available)

Calamine cleaning on the injector nose is prohibited.

PROHIBITED OPERATIONS : HDI DIRECT INJECTION SYSTEM DENSO

1. Protection

CAUTION : Always plug the apertures straightaway after opening up the fuel circuit ; Using the specific plugs kit.

2. Cleaning

CAUTION : The use of a "high pressure" cleaner is prohibited.

CAUTION : Do not use compressed air.

3. Fuel supply system

Recommended fuel : Diesel.

CAUTION : Do not use fuel other than diesel (Risk of destruction of the injection system and of the engine.

CAUTION : The addition of additives, such as fuel circuit cleaners/remetallisers, is forbidden.

4. Electrical circuit

Switching an injection ECU from one vehicle to another will make it impossible to start either vehicle.

CAUTION : Do not supply a diesel injector with 12 volts.

5. Fuel high pressure pump

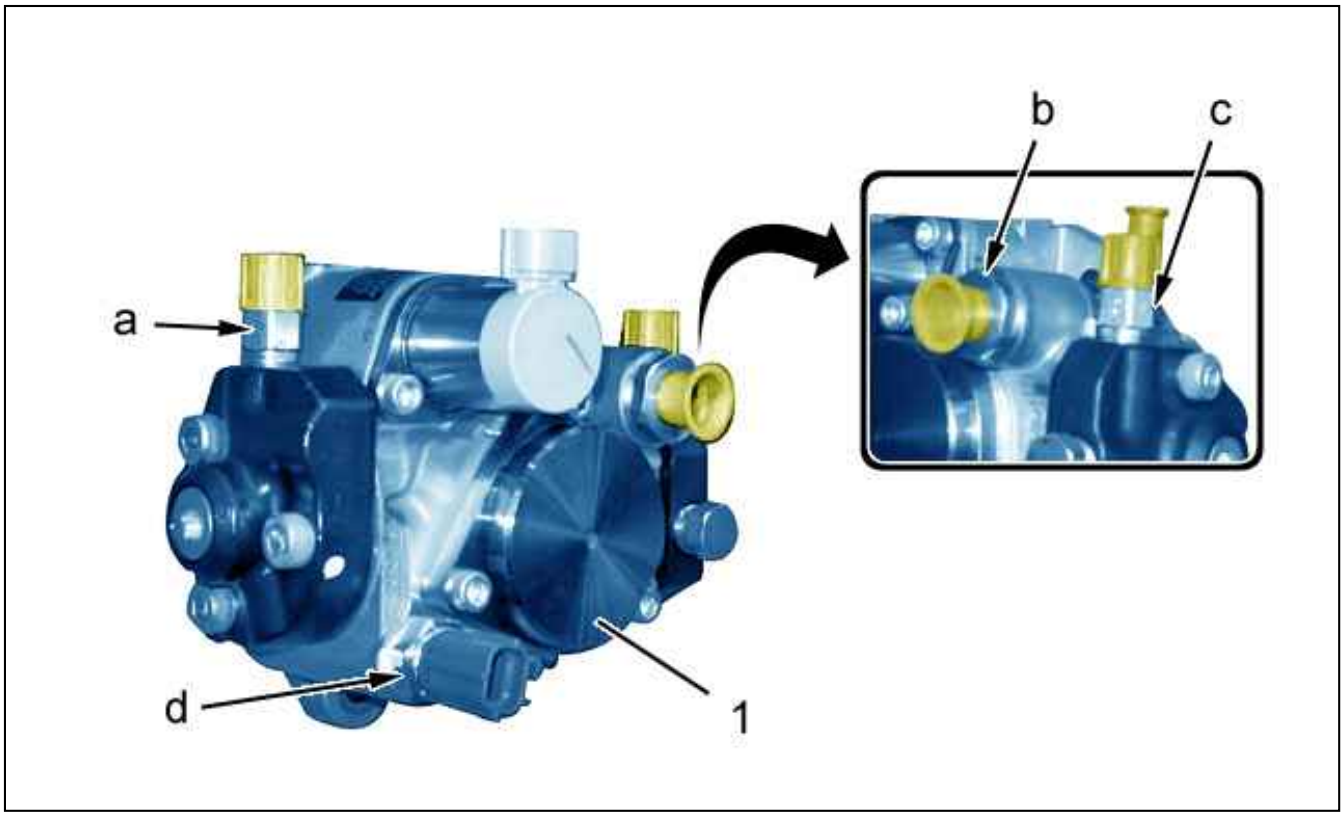

Figure : B1BK3YJD

Do not separate the following components from the high pressure fuel pump (1) :

- The high pressure outlet unions "a" and "c" (malfunction)
- The fuel supply union "b" (Malfunction)
- The fuel temperature sensor "d" (replacement parts not available)

6. Fuel high pressure common injection rail

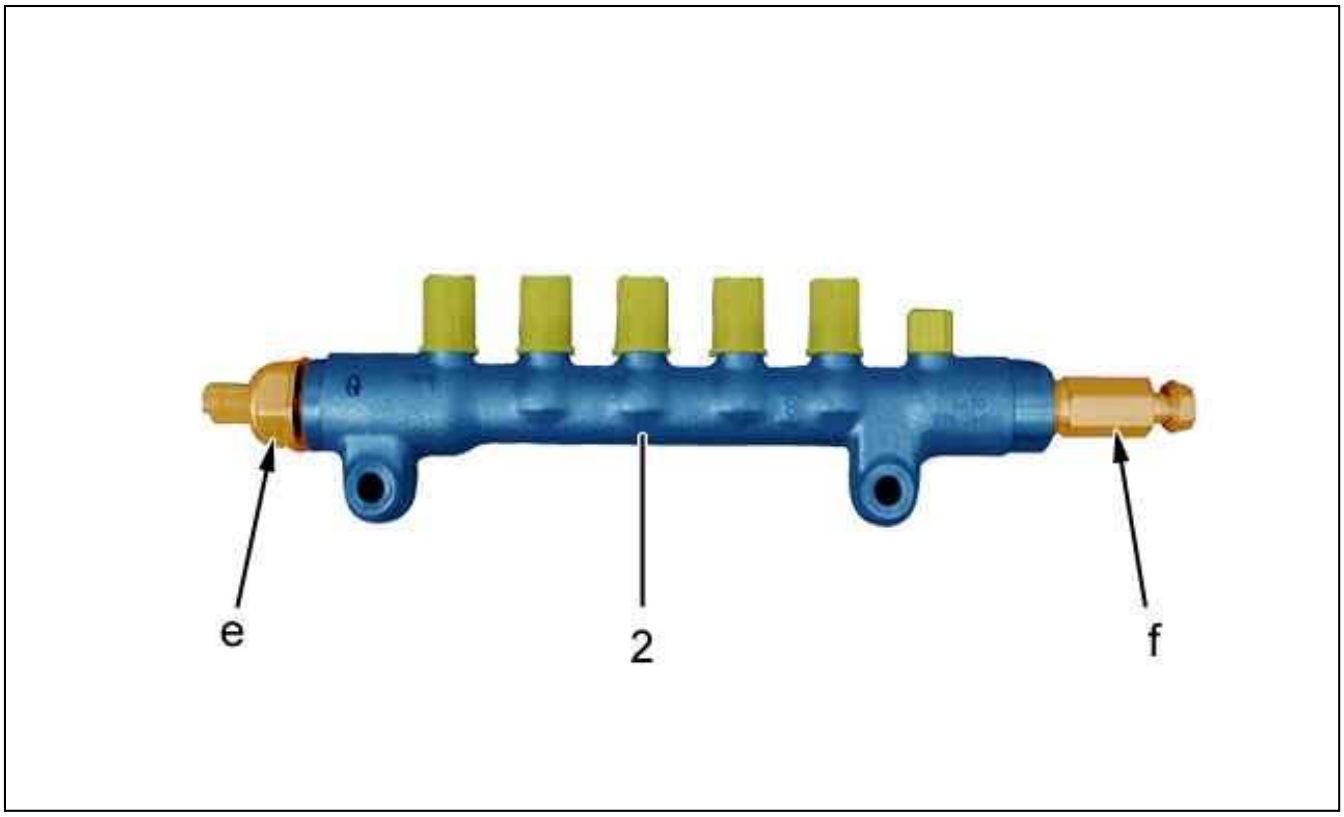

Figure : B1BK3YKD

Do not separate the following components from the fuel high pressure common injection rail (2) :

- The pressure sensor "e" (replacement parts not available)
- The pressure regulator "f" (replacement parts not available)

7. Diesel injector

CAUTION : Cleaning operations using diesel and ultrasound are prohibited.

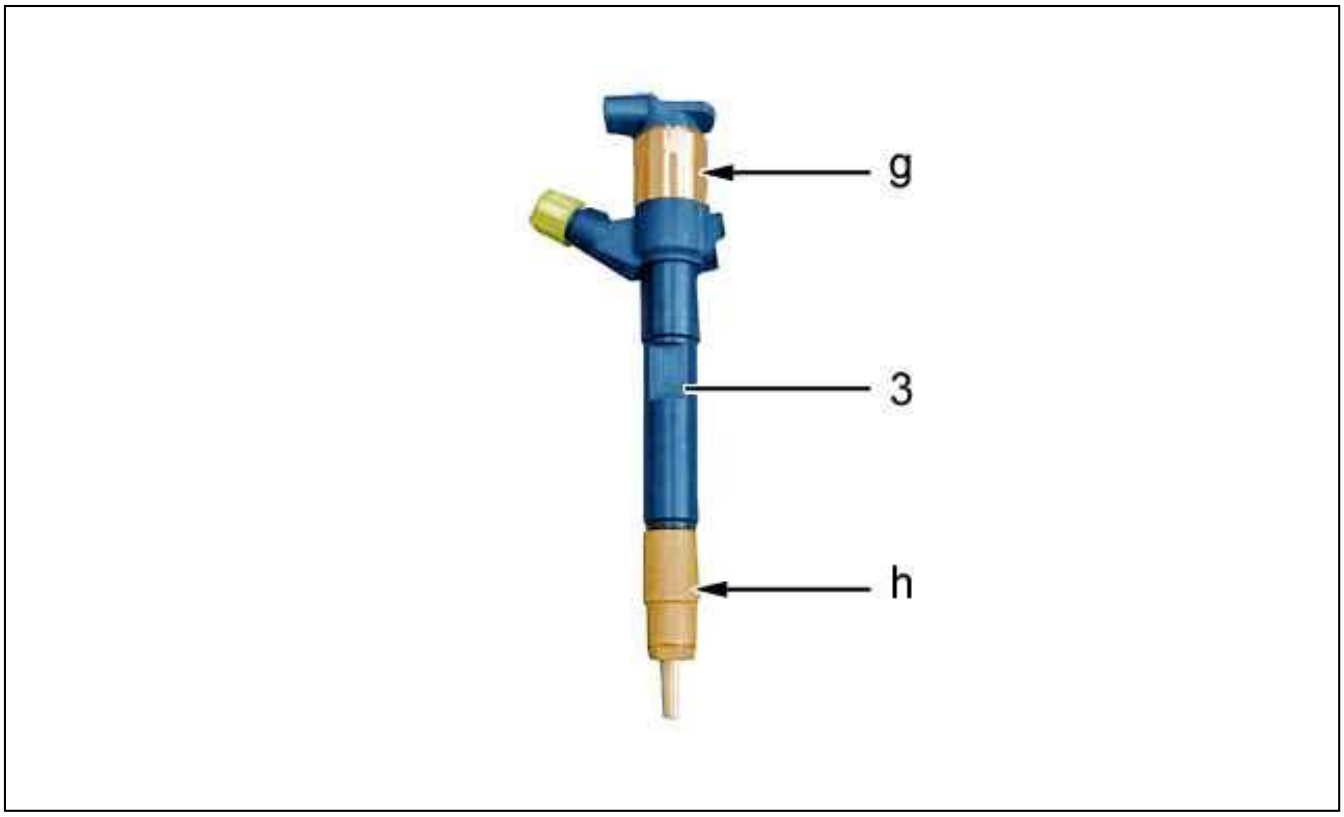

Figure : B1BK3YLD

Do not separate the following components from the diesel injector carrier (3) :

- Electromagnetic element "g" (replacement parts not available)
- Diesel injector "h" (replacement parts not available)

CAUTION : Calamine cleaning on the injector nose is prohibited.

PROHIBITED OPERATIONS : PETROL DIRECT INJECTION SYSTEM THP

1. Cleaning

The use of a "high pressure" cleaner is prohibited.
Do not use compressed air.

2. Fuel supply system

Recommended fuel : Unleaded petrol.

3. Electrical circuit

Swapping of engine ECUs between two vehicles makes it impossible to start either vehicle.
It is forbidden to supply either one or all of the injectors with 12 volts.

4. high pressure fuel pump

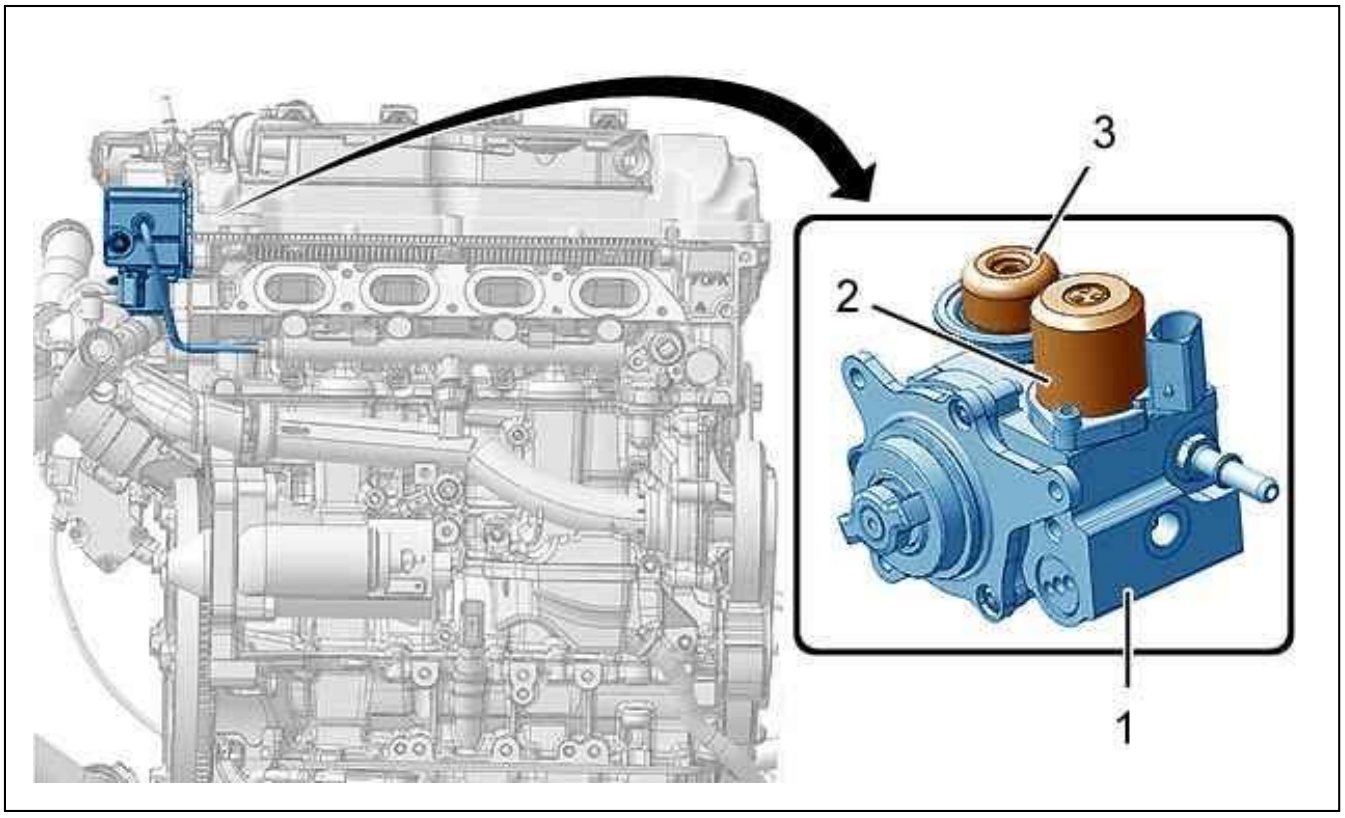

Figure : B1BK3XBD

Heating unit (1) :

- Fuel high pressure regulation electrovalve (2) ; (No replacement parts)
- Oil excess pressure valve (3) ; (No replacement parts)

PROHIBITED OPERATIONS : HDI DIRECT INJECTION SYSTEM CONTINENTAL-SIEMENS

1. Protection

CAUTION : Always plug the apertures straightaway after opening up the fuel circuit ; Using the specific plugs kit.

2. Cleaning

CAUTION : The use of a "high pressure" cleaner is prohibited.

CAUTION : Do not use compressed air.

3. Fuel supply system

Recommended fuel : Diesel.

CAUTION : Do not use fuel other than diesel (Risk of destruction of the injection system and of the engine.

CAUTION : The addition of additives, such as fuel circuit cleaners/remetallisers, is forbidden.

4. Electrical circuit

Switching an injection ECU from one vehicle to another will make it impossible to start either vehicle.

CAUTION : Do not supply a diesel injector with 12 volts.

5. high pressure fuel pump

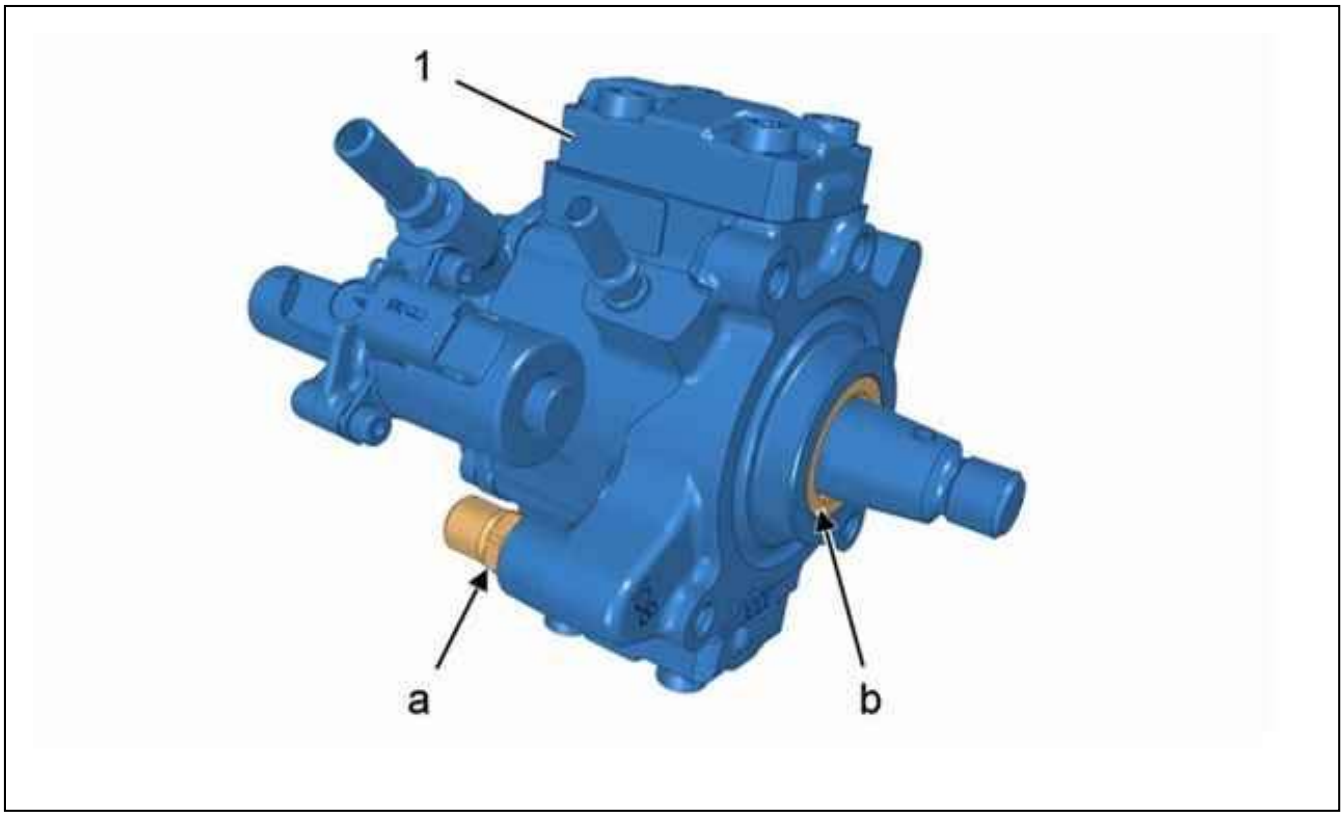

Figure : B1BK3XMD

Do not separate the following components from the fuel high pressure pump (1) :

- High pressure outlet union "a" (malfunction)
- Sealing ring "b" (replacement parts not available)

6. Diesel injector

CAUTION : Cleaning operations using diesel and ultrasound are prohibited.

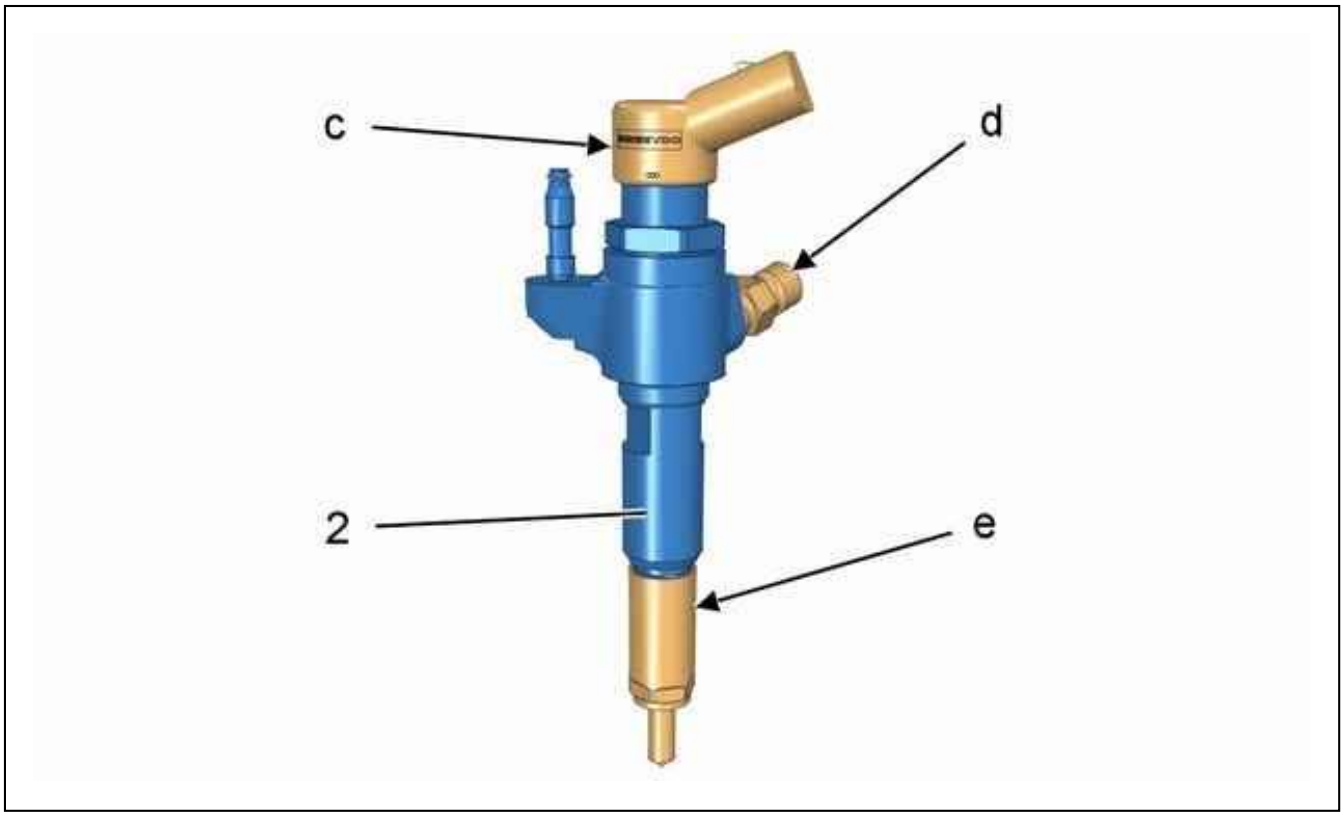

Figure : B1BK3XND

Do not separate the diesel injector body (2) from the following components :

- Electromagnetic element "c" (replacement parts not available)
- High pressure union "d" (malfunction)
- Diesel injector "e" (replacement parts not available)

Calamine cleaning on the injector nose is prohibited.

REMOVING - REFITTING : CYLINDER HEAD (ON VEHICLE)

ESSENTIAL : Observe the safety and cleanliness recommendations .

1. Tooling

Equipment :

- Dial gauge of FACOM type
- Magnetic dial gauge mounting of type FACOM 812.2

Tool	Reference	Designation
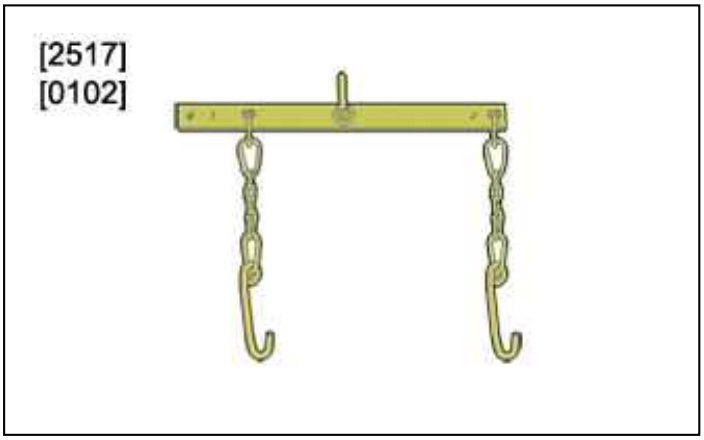 Figure : E5AG08YT	[2517] [0102]	lifting bracket
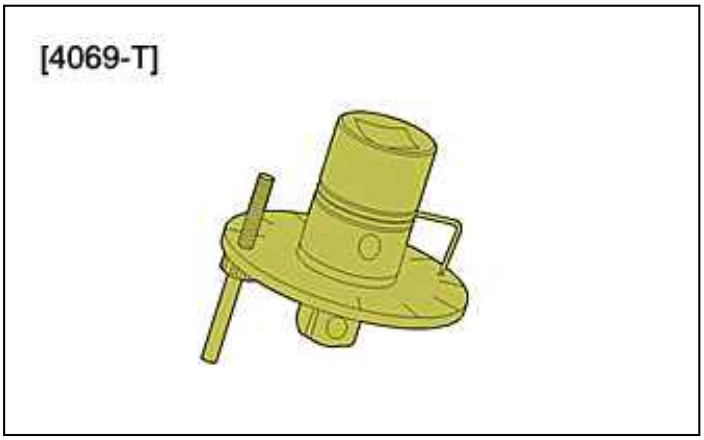 Figure : E5AB0AYT	[4069-T]	adaptor for angular tightening

2. Removing

Place the vehicle on a 2-post lift.
Disconnect the battery negative terminal.
Drain the engine oil off.
Remove :

- The camshafts
- Heat exchanger hoses

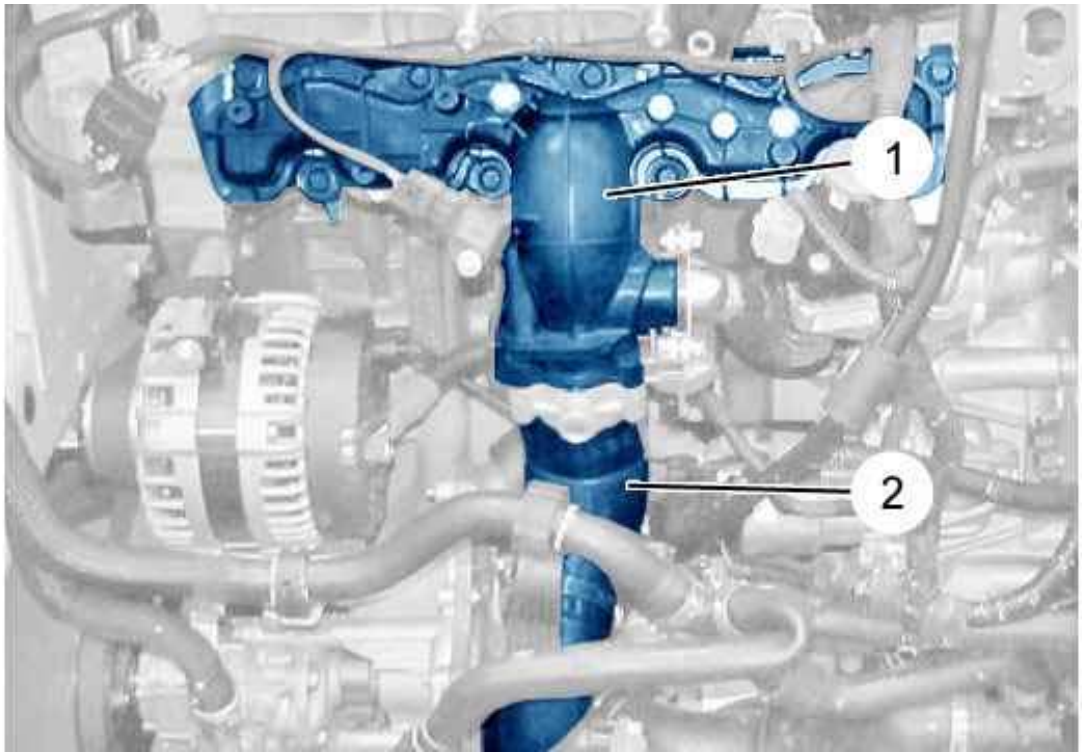

Figure : B1DG0SND

Remove the air inlet duct (2) from the air inlet manifold (1).

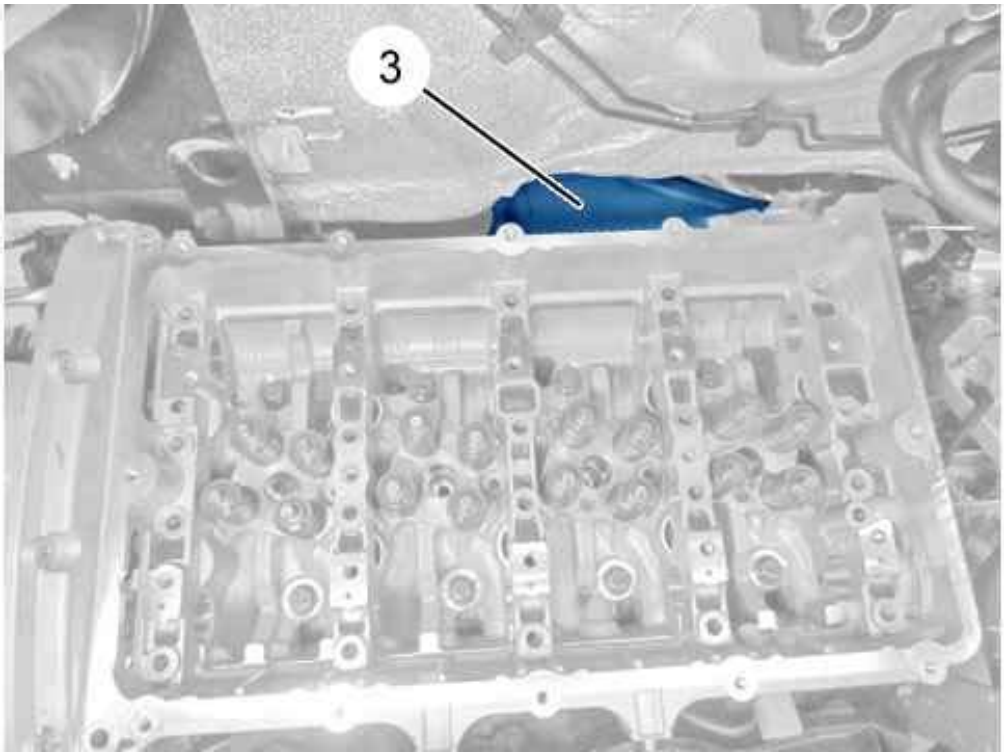

Figure : B1DG0SOD

Remove : The turbocharger heat shield (3).

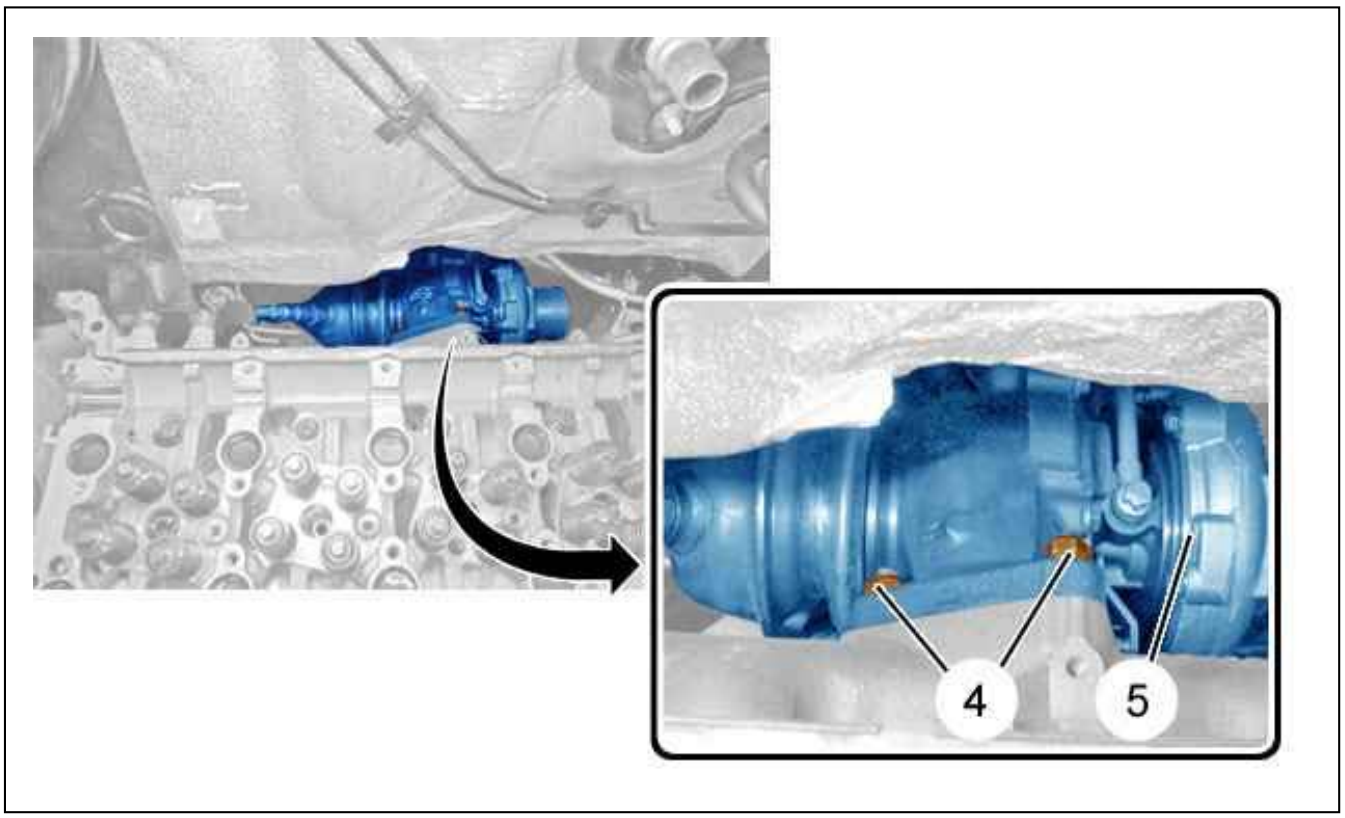

Figure : B1DG0SPD

Remove : The 2 turbocharger (4) upper nuts (5).

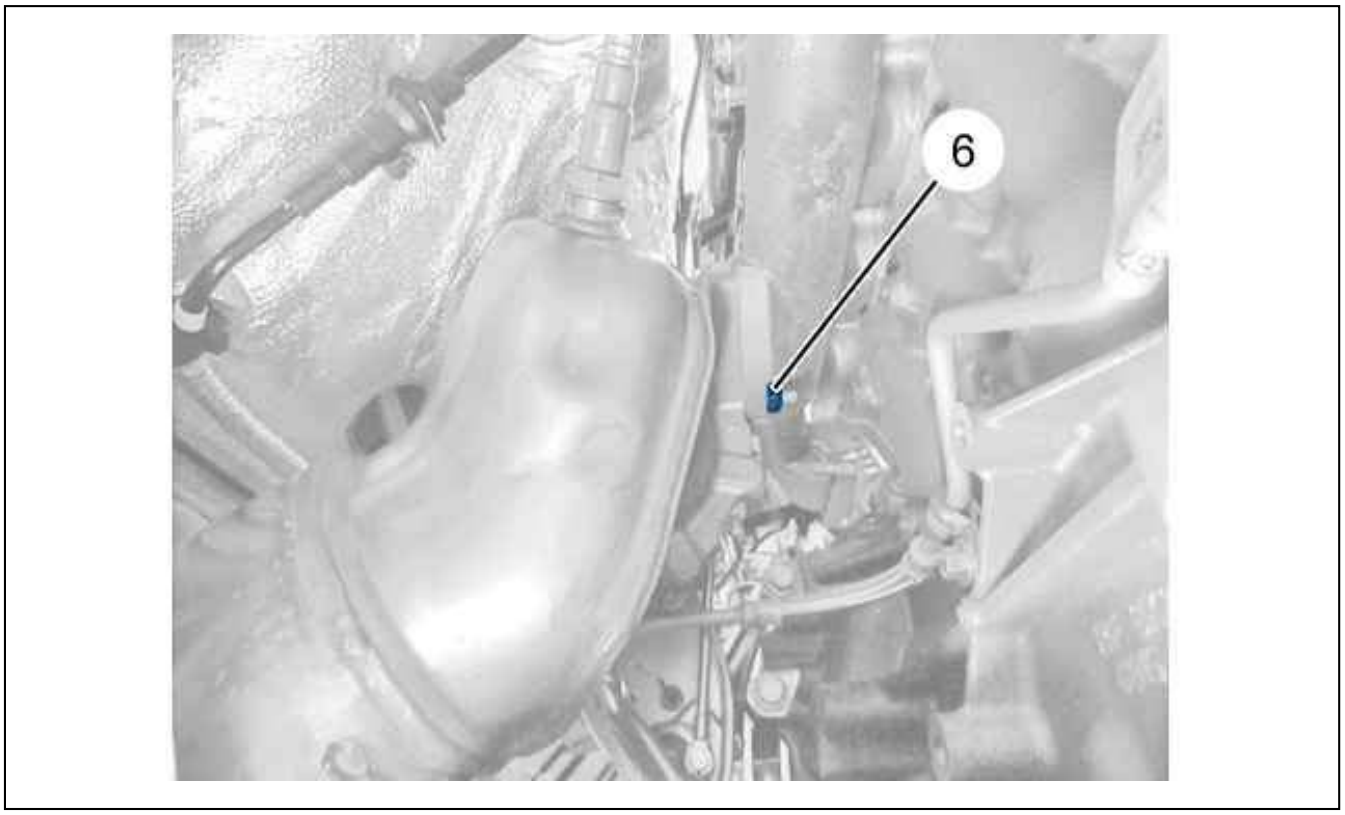

Figure : B1DG0SQD

Remove : The turbocharger (5) lower nut (6).

N.B. : From below the vehicle.

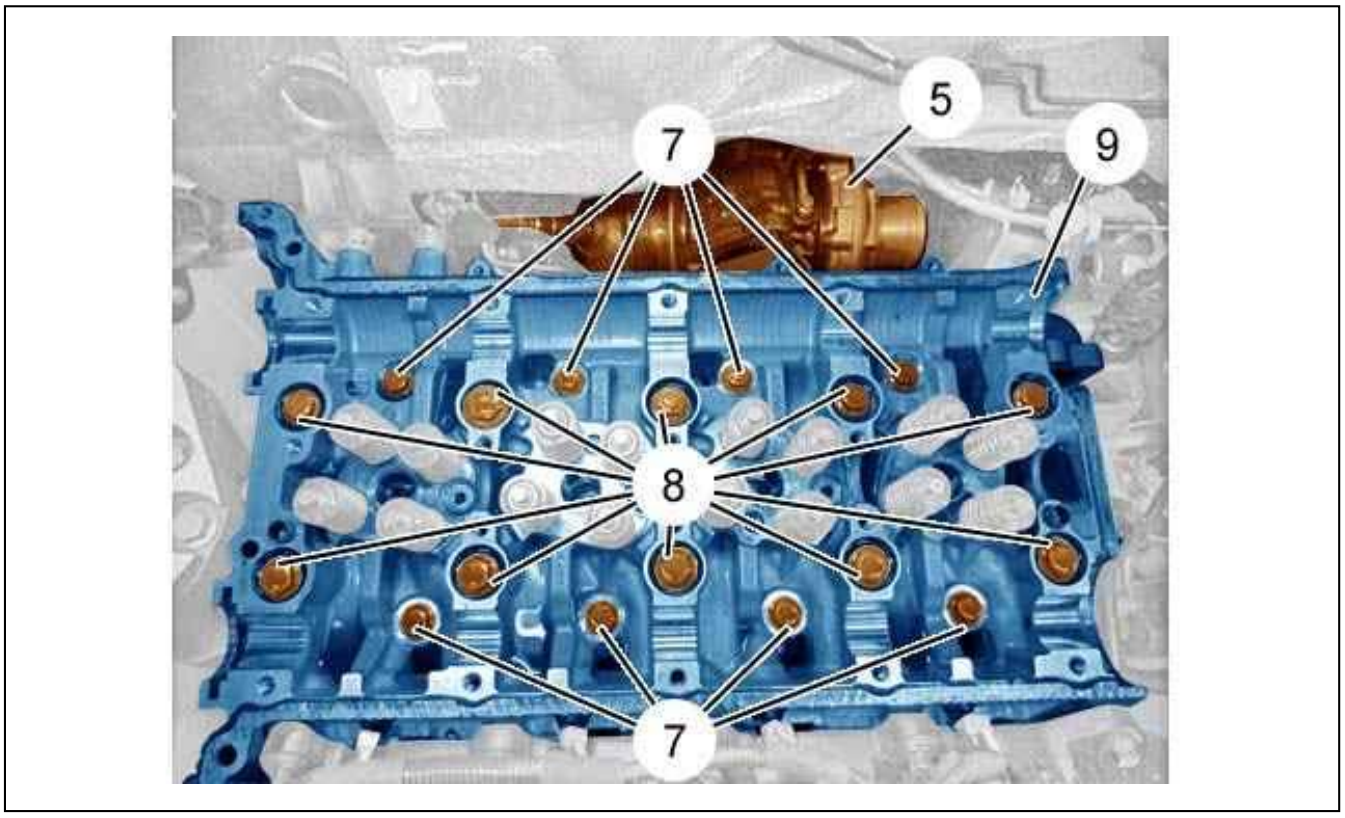

Figure : B1DG0SRD

Move the turbocharger (5) aside a few centimetres.
Remove :

- The 8 cylinder head bolts (7), diameter 8 mm
- The 10 cylinder head bolts (8), diameter 10 mm
- The cylinder head (9) ; Using tool [2517-T / 0102]

N.B. : Tilt and detach the cylinder head (9).

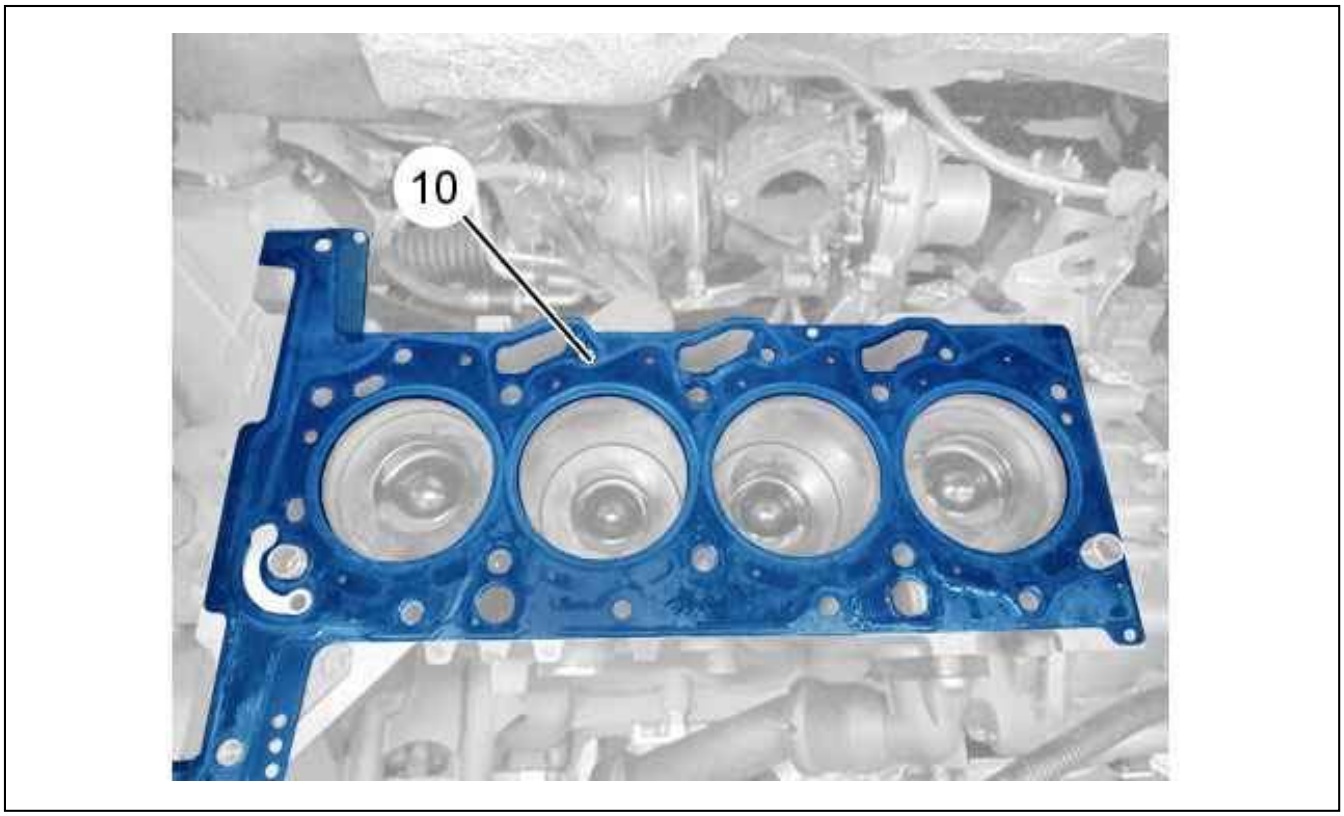

Figure : B1DG0SSD

Remove : The cylinder head gasket (10).

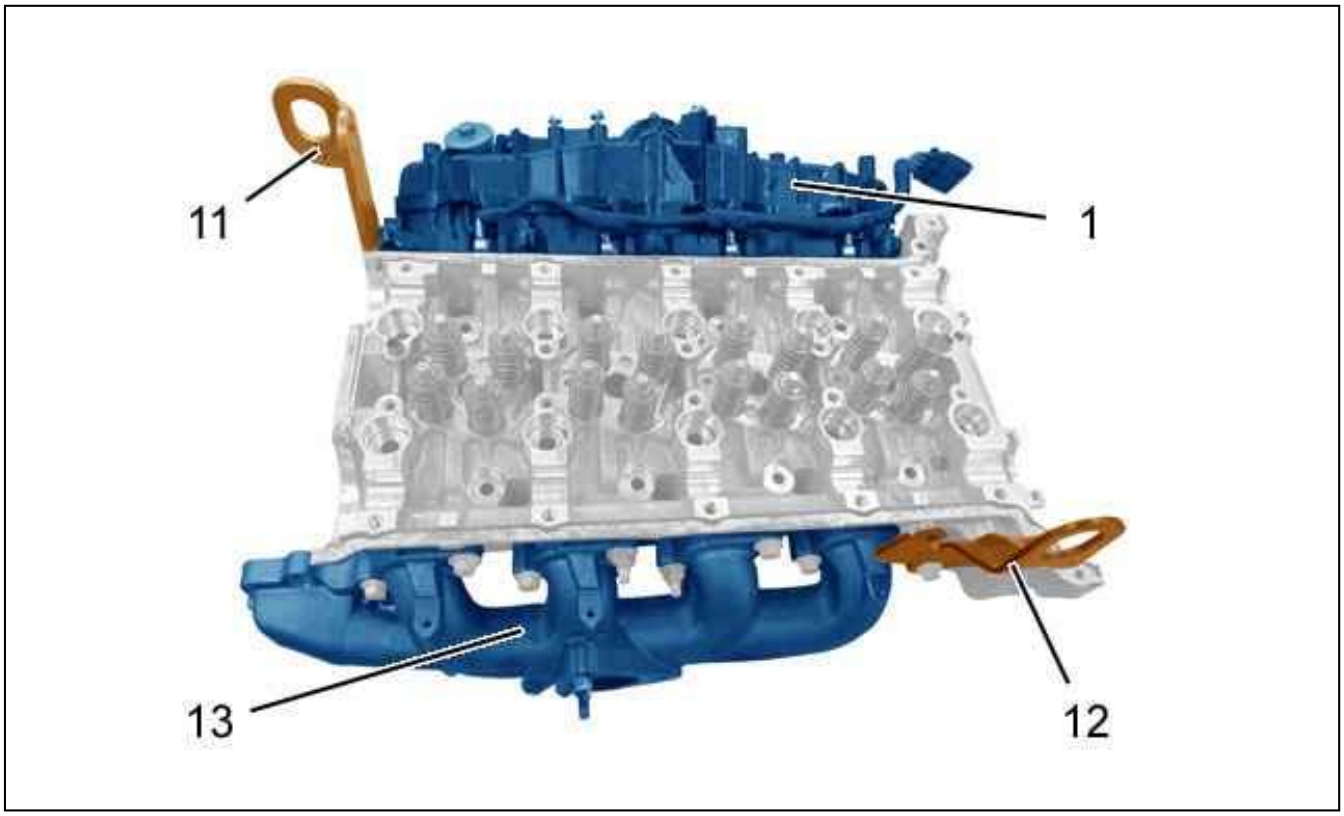

Figure : B1DG0STD

Remove :

- The exhaust manifold (13)

- The inlet manifold (1)
- The sling hooks (11), (12)

3. Verification - Preparation

3.1. Cleaning to be carried out just before refitting

CAUTION : Clean the gasket faces with an approved descaling product, Do not use a cutting or abrasive tool. The gasket faces must not have any traces of knocks or scores.

Clean out with a tap the threads in the crankcase which accommodate the cylinder head screws (M10 and M18).

3.2. Checking the flatness

Check the flatness of the cylinder head : Maximum permissible bow = 0,1 mm.

3.3. Checking the protrusion of the pistons

CAUTION : Remove the crankshaft immobilisation and locking tool.

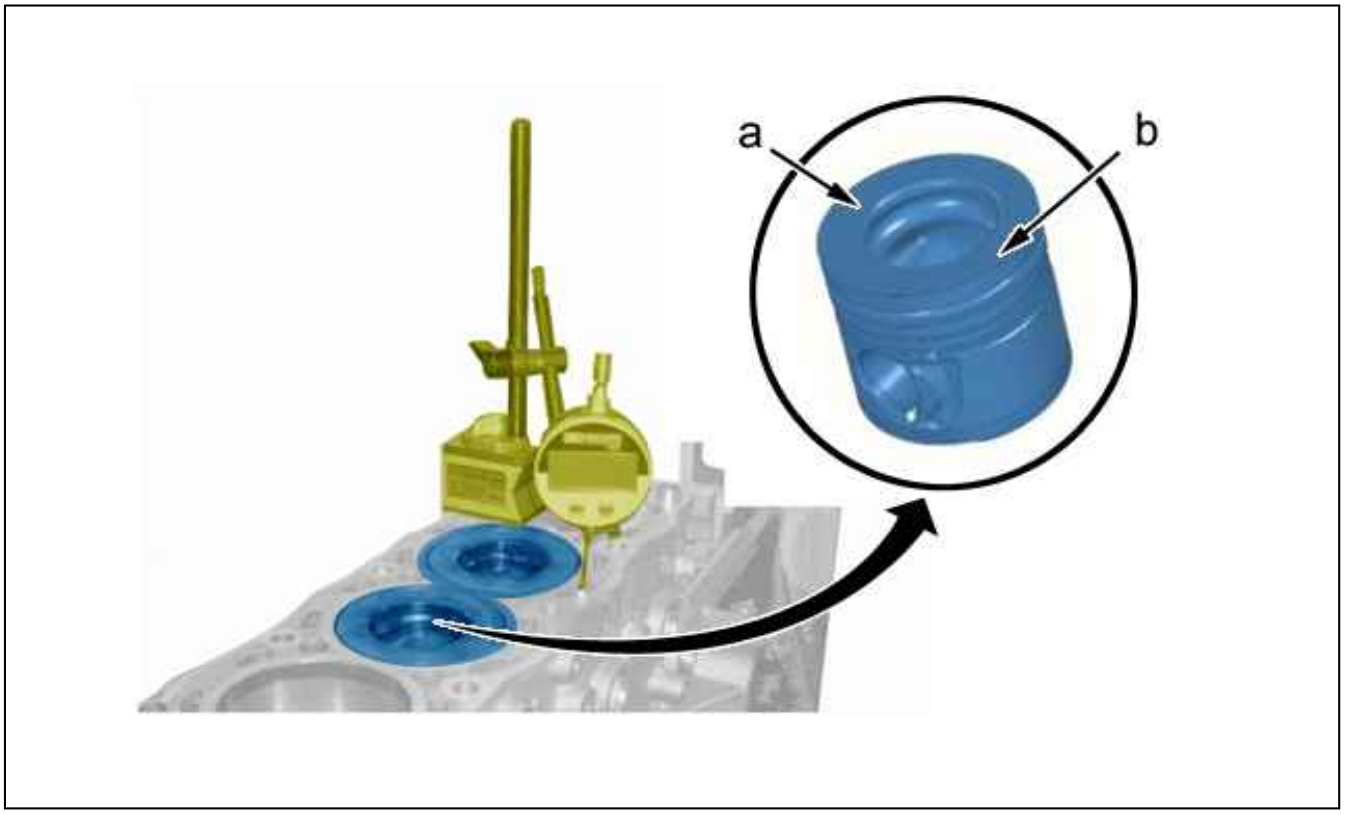

Figure : B1DG0RAD

CAUTION : The sealing surfaces must be perfectly clean : No signs of impact, no traces of scaling permitted.

Place the pistons of cylinders 1 and 4 at top dead centre ; Using the dial gauge.
Note down the stand-proud of the pistons in relation to the cylinder block seal face.
Pistons 1 - 4 :

- Place the dial gauge in a stable position on the cylinder block gasket face ; Set the dial gauge to zero
- Move the dial gauge over the 2 checking points "a", "b" (Piston) (10 mm from the edge) ; Read the values
- Calculate the average of the 2 values measured

Pistons 2 - 3 : Repeat the operation.

3.4. Choice of cylinder head gasket

CAUTION : Select the cylinder head gasket in relation to the protrusion of the pistons.

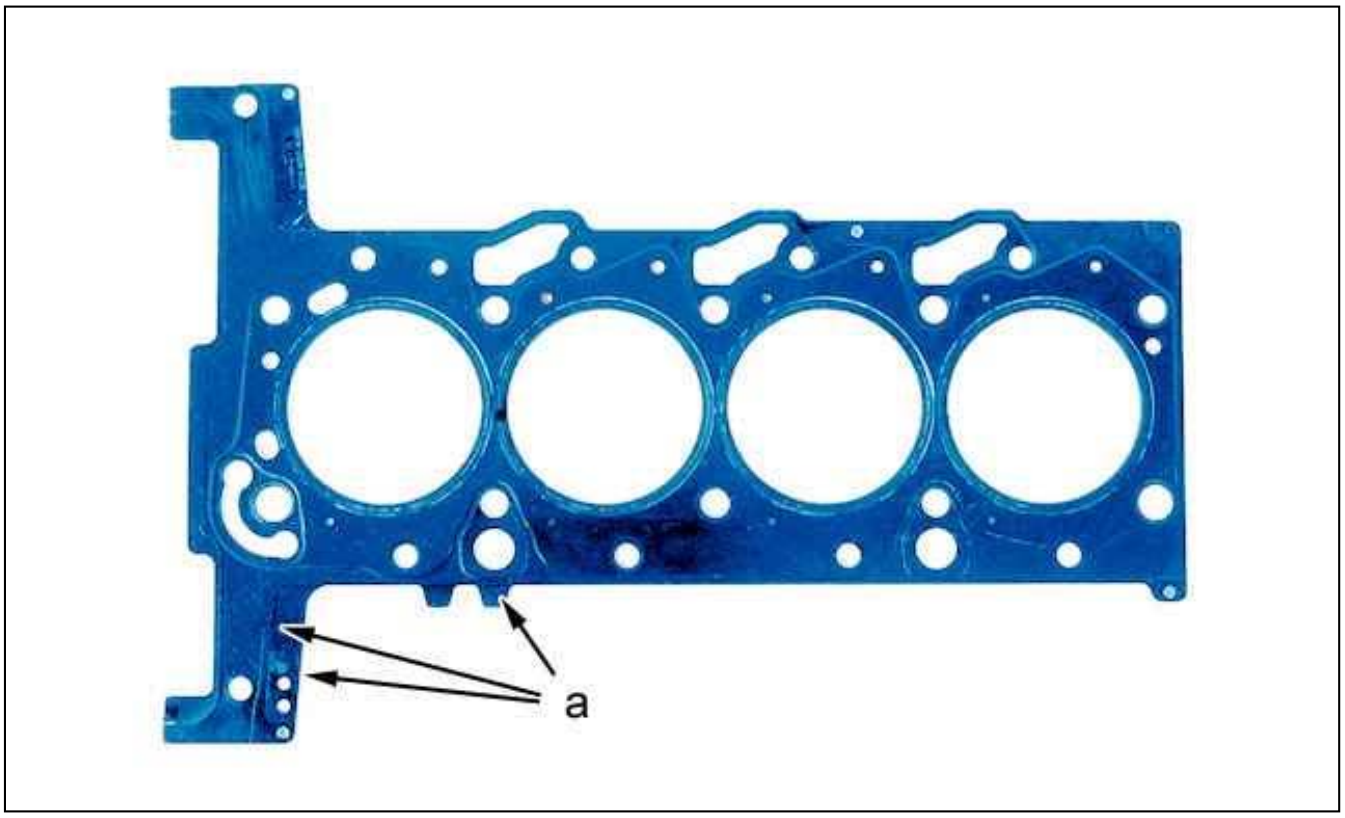

Figure : B1BPSCGD

"a" : Thickness identification .

Piston protrusion	Gasket thickness	Number of notches at "a"
0,430 to 0,520 mm	1,1 ± 0,1 mm	1
0,521 to 0,570 mm	1,15 ± 0,1 mm	2
0,571 to 0,620 mm	1,2 ± 0,1 mm	3

CAUTION : If the value measured does not correspond to the values indicated, investigate the origin of the faul (measurement error, handling error etc.).

4. Refitting

CAUTION : Adhere to the tightening torques ; Using the tools [4069-T].

CAUTION : Check that the cylinder head to cylinder block centring pegs are in place.

Refit :

- The sling hooks (11), (12)
- The inlet manifold (1)
- The exhaust manifold (13)

- The new cylinder head gasket (10)

N.B. : Follow the direction of fitting ; Thickness identification on the fuel high pressure pump side.

Refit :

- The cylinder head (9)
- The 10 cylinder head bolts (8), diameter 10 mm (new)
- The 8 cylinder head bolts (7), diameter 8 mm (new)

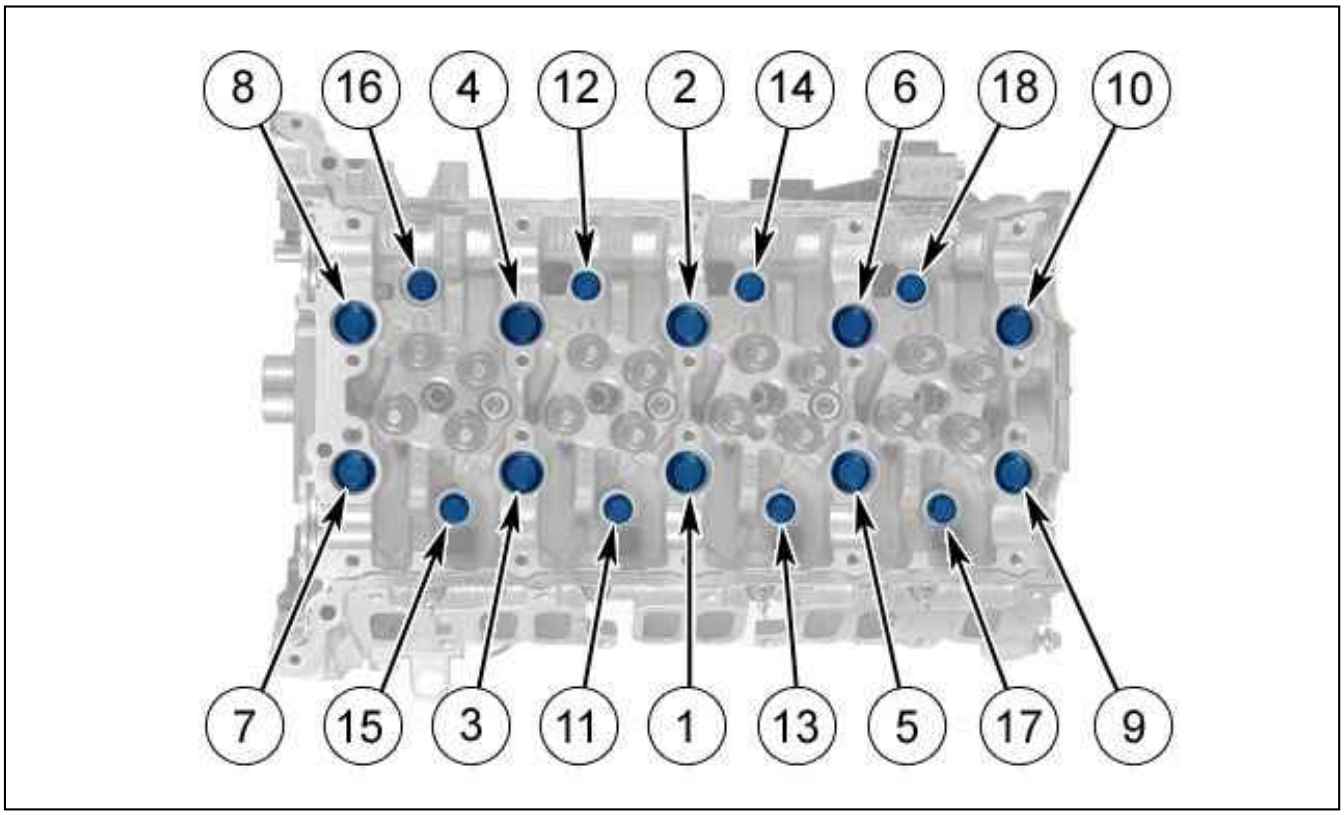

Figure : B1DP1Y3D

CAUTION : Adhere to the tightening torques ; Using the tools [4069-T].

Refit :

- The turbocharger (5)
- The 2 turbocharger (4) upper nuts (5)
- The turbocharger (5) lower nut (6)
- The turbocharger heat shield (3)
- The air inlet manifold (1) air inlet duct (2)
- The heater matrix hoses
- The camshafts

Fill and top up the oil sump.
Fill and bleed the engine cooling circuit.

CAUTION : Perform the operations to be carried out following reconnection of the battery.

Reconnect the battery.

REMOVING - REFITTING : CAMSHAFTS

ESSENTIAL : Observe the safety and cleanliness recommendations .

1. Tooling

Equipment : Longitudinal engine support bar .

Tool	Reference	Designation
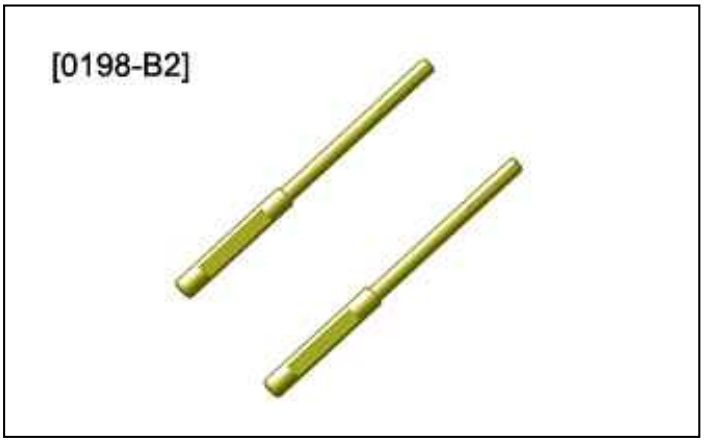 Figure : E5AG08ST	[0198-B2]	camshaft gear setting rod

2. Removing

ESSENTIAL : Respect the safety and cleanliness recommendations that are specific to high pressure diesel injection (HDi) engines .

Place the vehicle on a 2-post lift.
Disconnect the battery negative terminal.
Drain the engine cooling circuit .
Remove :

- The upper central bumper
- The front right mud guard
- The protection plates under the engine
- The right-hand headlamp
- The bonnet opening control
- The front panel upper crossmember
- The auxiliary equipment drive belt
- The alternator and air conditioning compressor drive belt guide rollers
- The timing chain

Refit :

- The engine top mounting
- The intermediate engine mounting

Remove :

- The longitudinal engine support bar
- The expansion bottle and power steering oil reservoir support
- The injectors
- The fuel high pressure pump

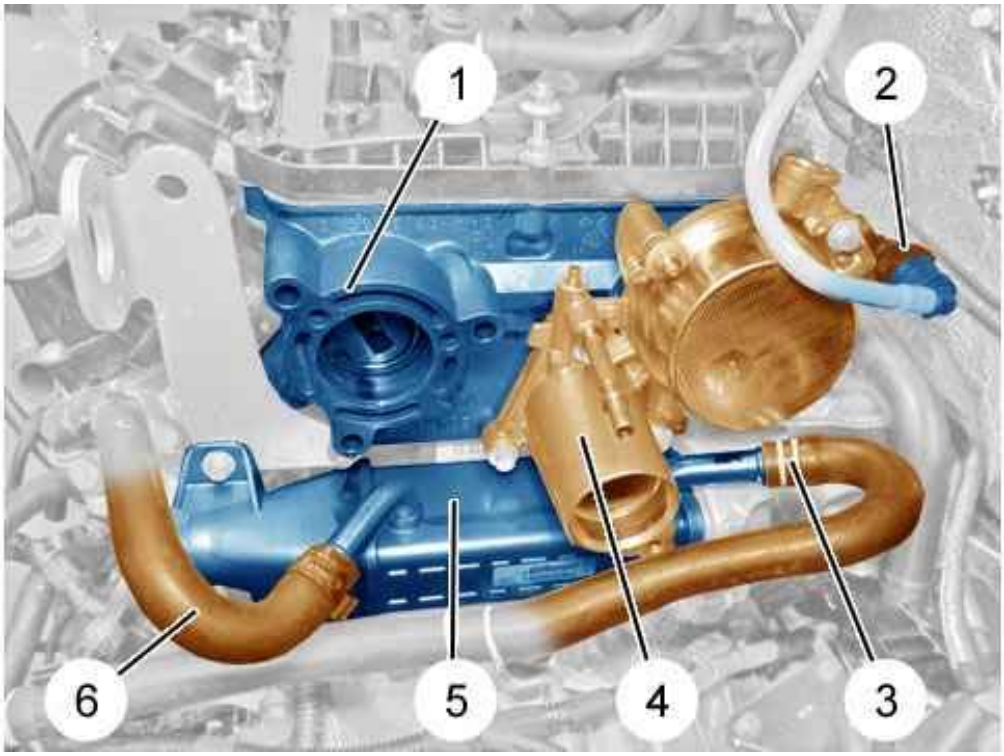

Figure : B1DG0SUD

Uncouple :

- The vacuum pipe (2)
- The pipe (3)
- The pipe (6)

Remove :

- The high pressure fuel pump support (1)
- The EGR heat exchanger (5)
- The vacuum pump and support (4) assembly

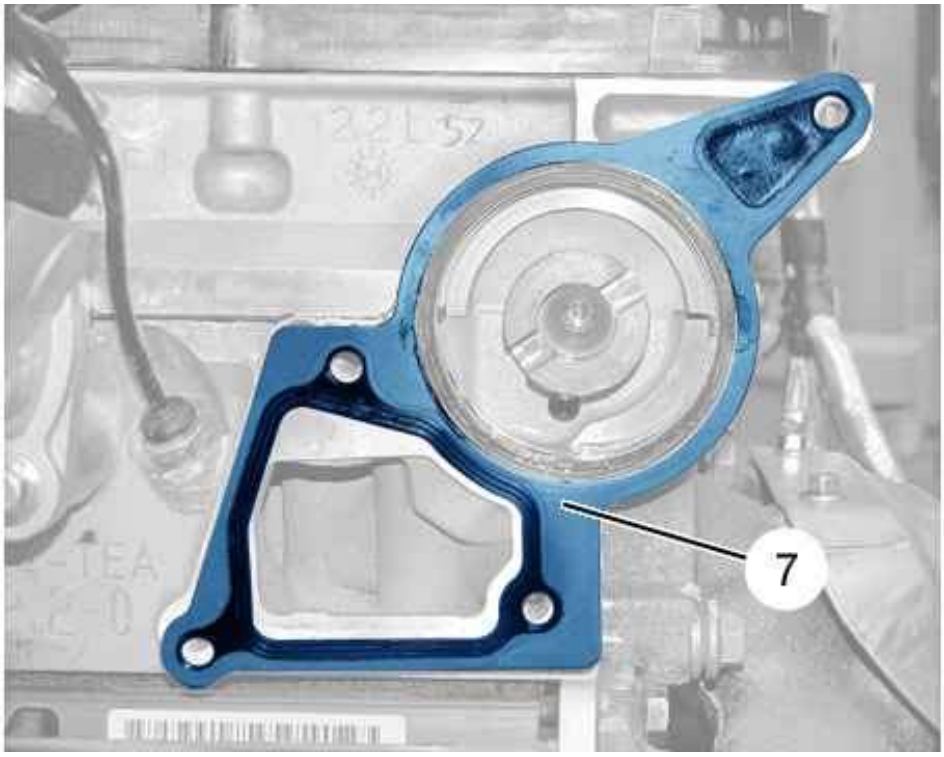

Figure : B1DG0SVD

Remove the seal (7).

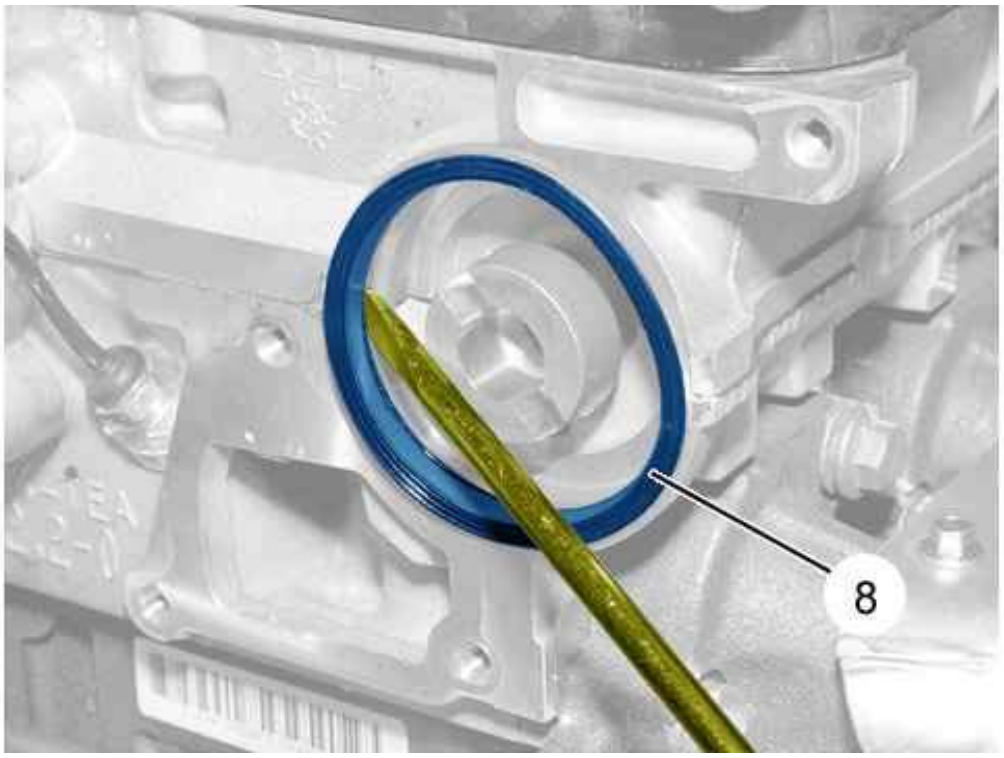

Figure : B1DG0SZD

Remove The exhauster gasket (8) ; Using a flat screwdriver.

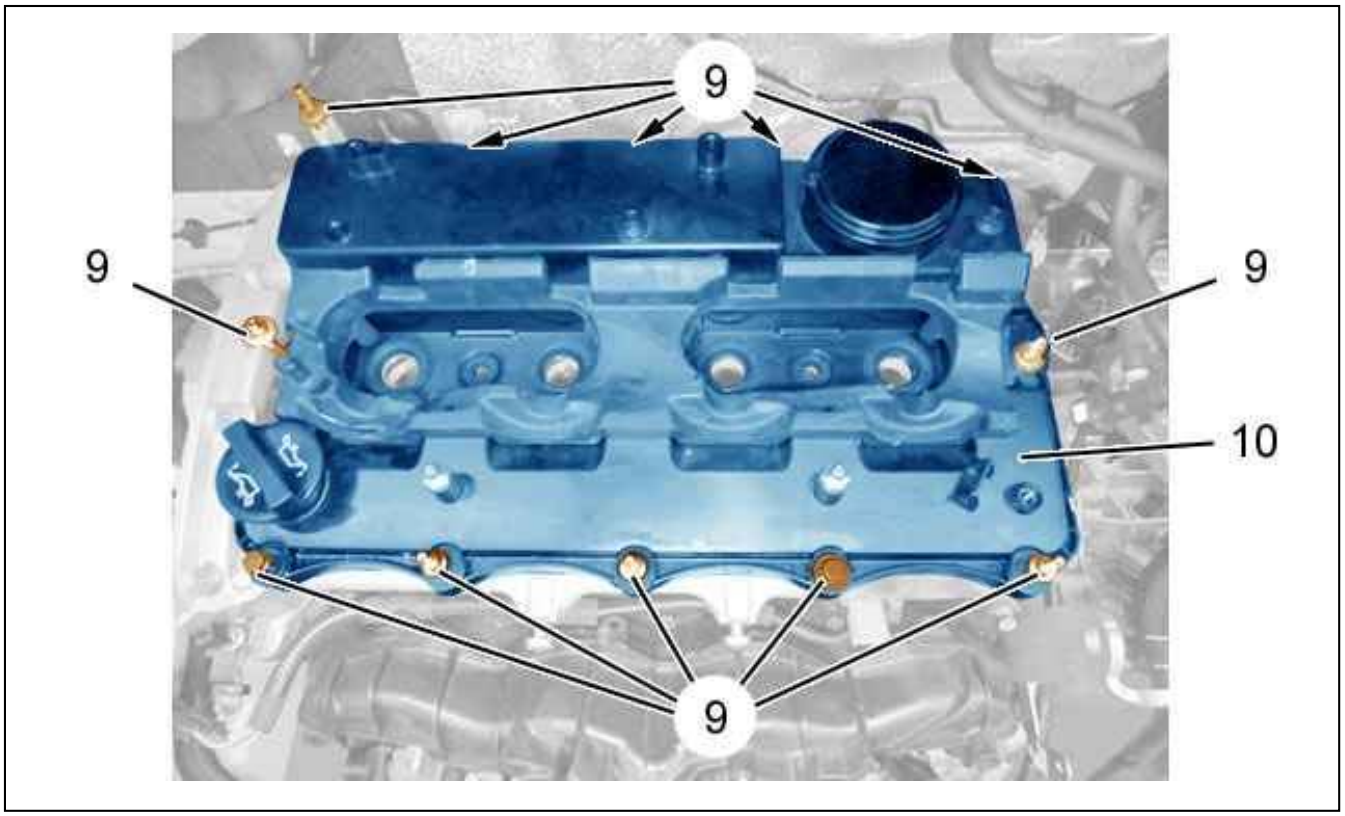

Figure : B1DG0T0D

Remove :

- The 12 fixings (9) of the cylinder head cover (10)
- The cylinder head cover (10)

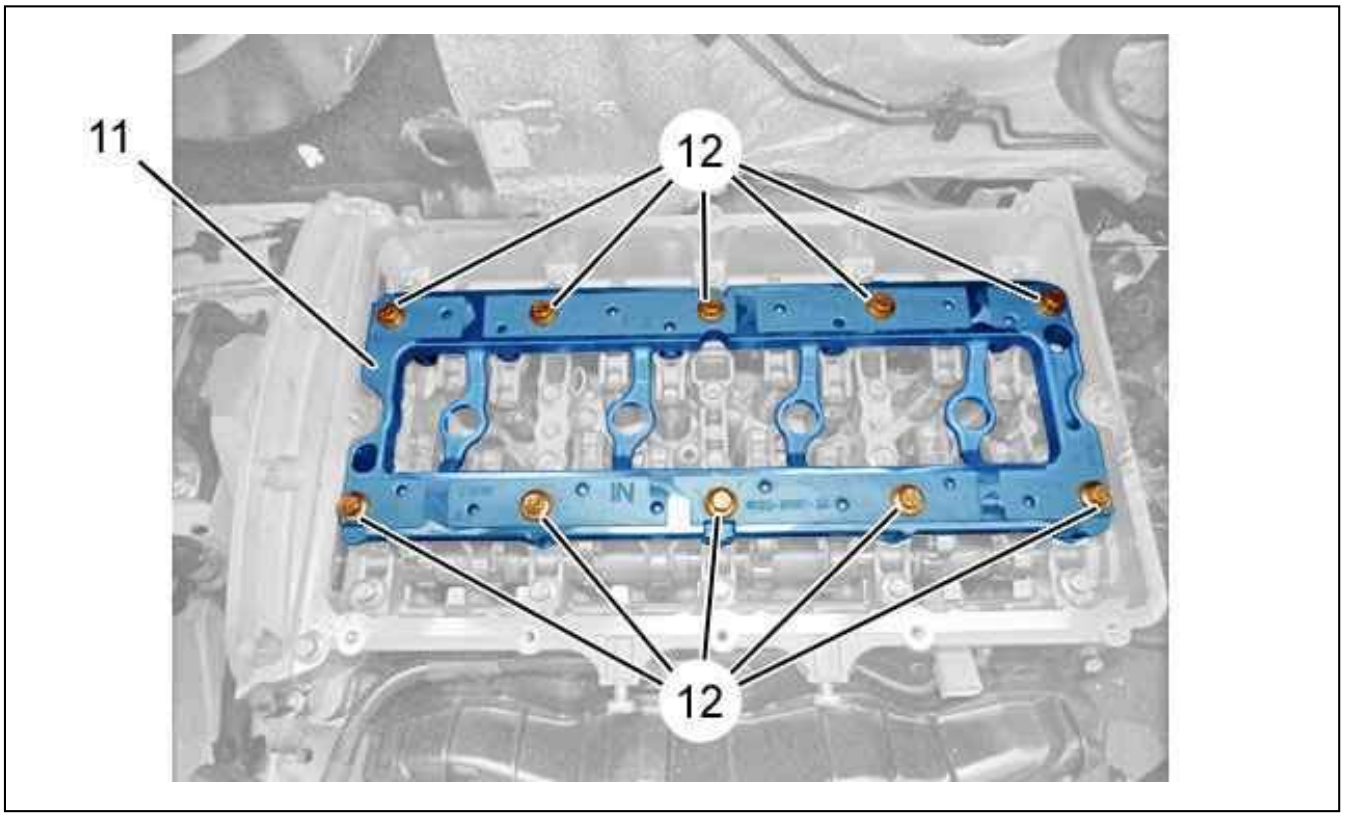

Figure : B1DG0T3D

Remove :

- The rockers support housing bolts (12)
- The rockers support housing (11)

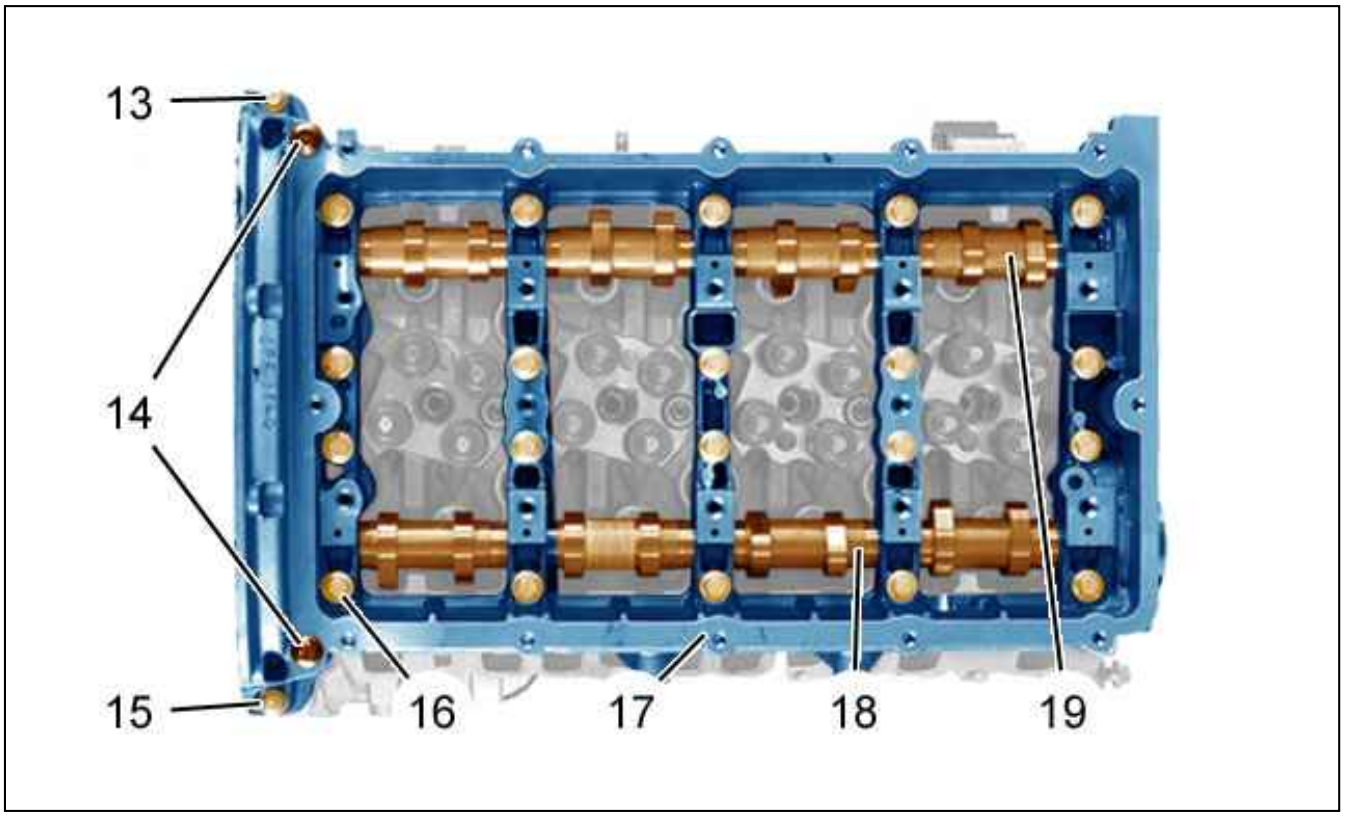

Figure : B1DG0T4D

Remove :

- The bolts (16)
- The pillar screw (15)
- The bolts (14)
- The (13) bolt

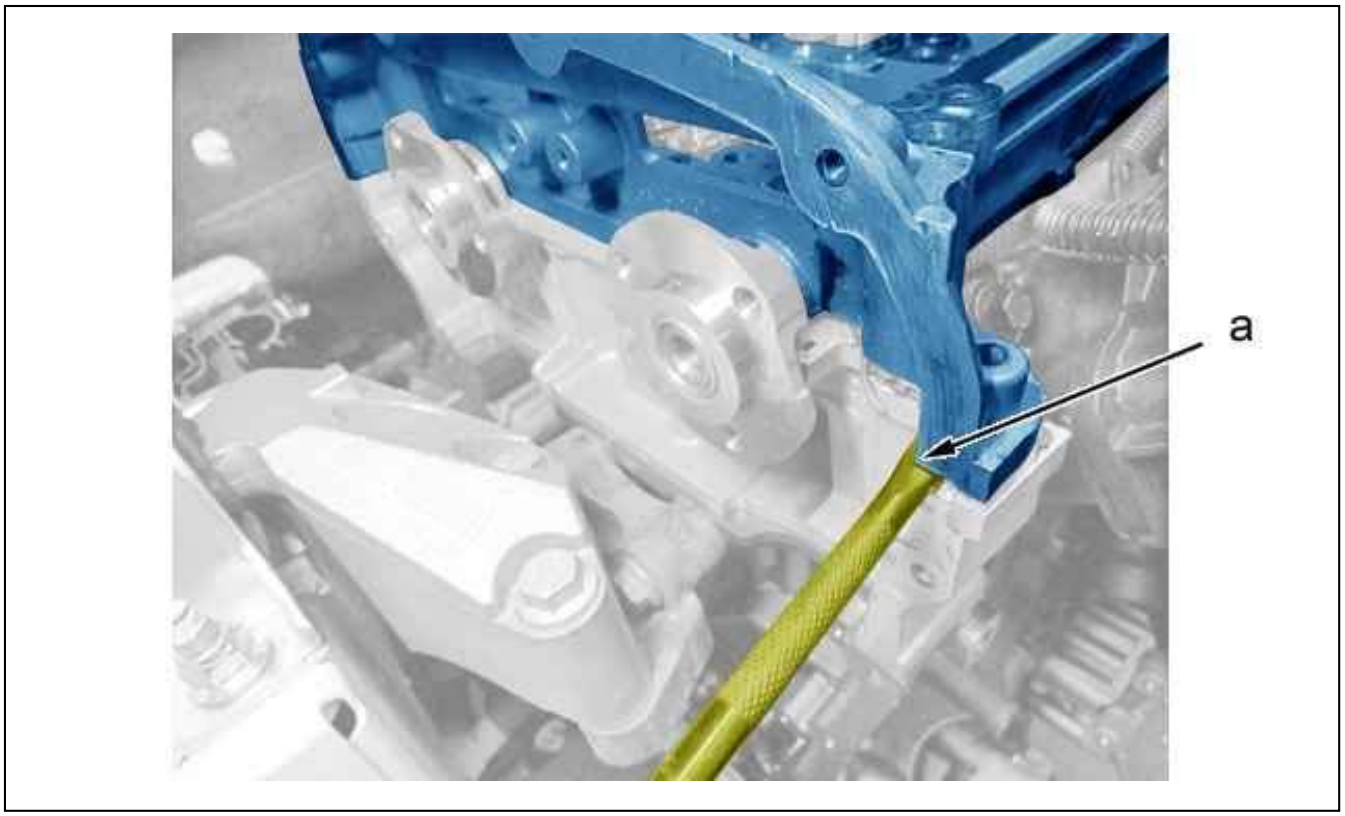

Figure : B1DG0T5D

Remove :

- The camshaft bearing cap cover (17) ; Using a chisel (at "a")
- The inlet camshaft (18)
- The exhaust camshaft (19)

CAUTION : Clean the gasket faces with an approved descaling product. Do not use abrasives or sharp tools on the joint faces. The gasket faces must not have any traces of knocks or scores.

3. Refitting

CAUTION : Adhere to the tightening torques .

CAUTION : Clean the bolt threads and taps before refitting.

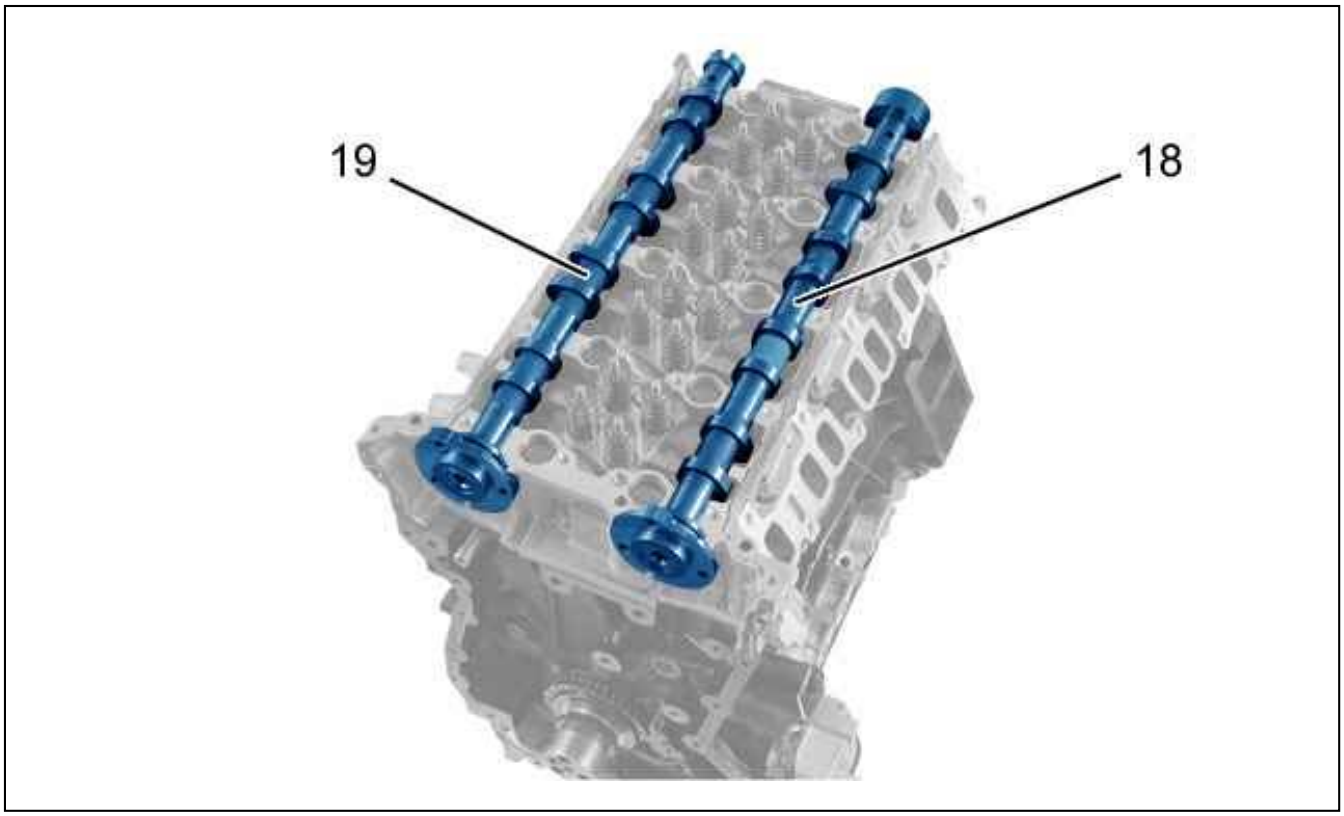

Figure : B1DG0T6D

Oil the camshaft seats on the cylinder head.
Refit :

- The inlet camshaft (18)
- The exhaust camshaft (19)

Oil the camshaft seats on the camshaft bearing cap housing.
Peg the camshafts ; Using tool [0198-B2].
Apply sealing product LOCTITE 518 around the camshaft bearing cap cover (17).

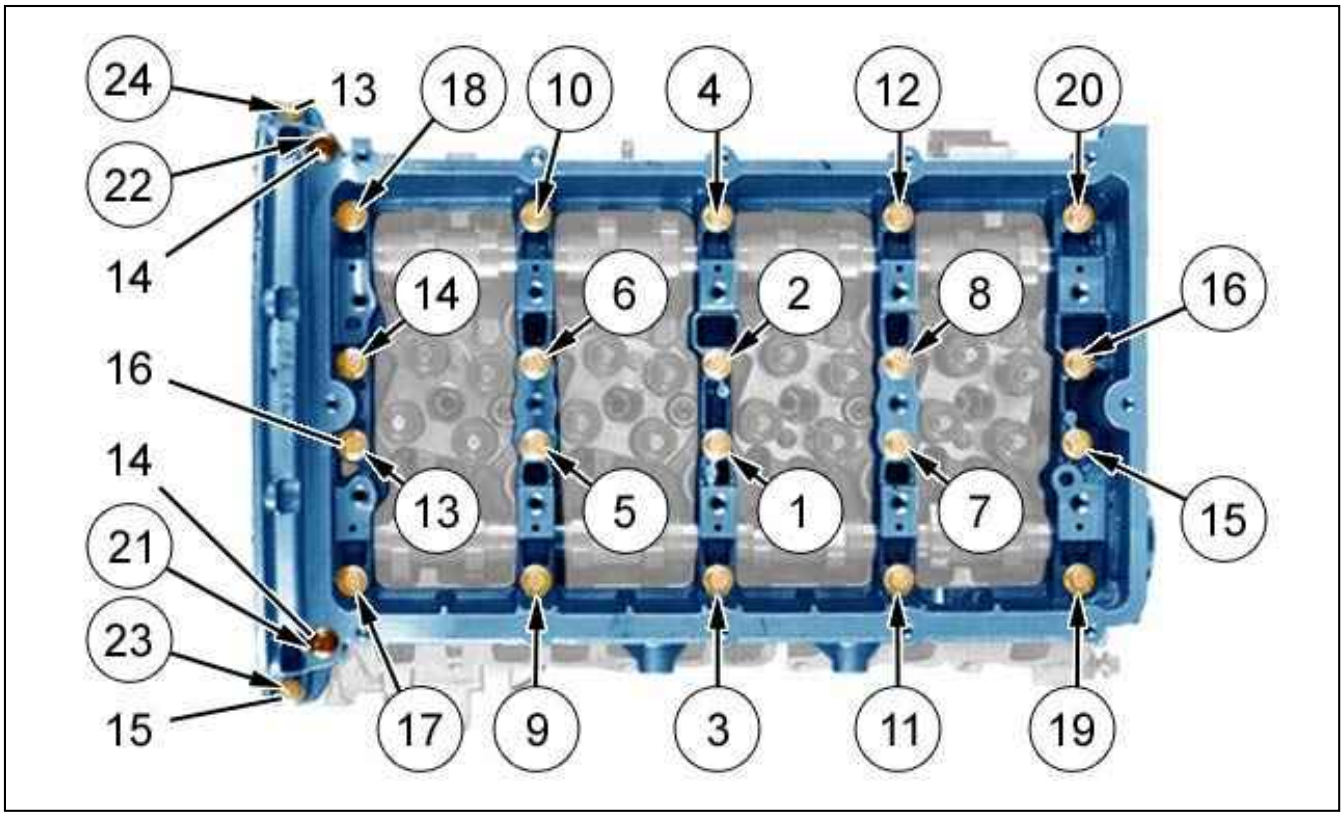

Figure : B1DG0T7D

CAUTION : Keep to the sequence of tightening as well as the tightening torques .

Refit :

- The camshaft bearing cap cover (17)
- The bolts (14)
- The bolts (16)
- The pillar screw (15)
- The (13) bolt

CAUTION : Check that the rockers are clipped on the rockers support.

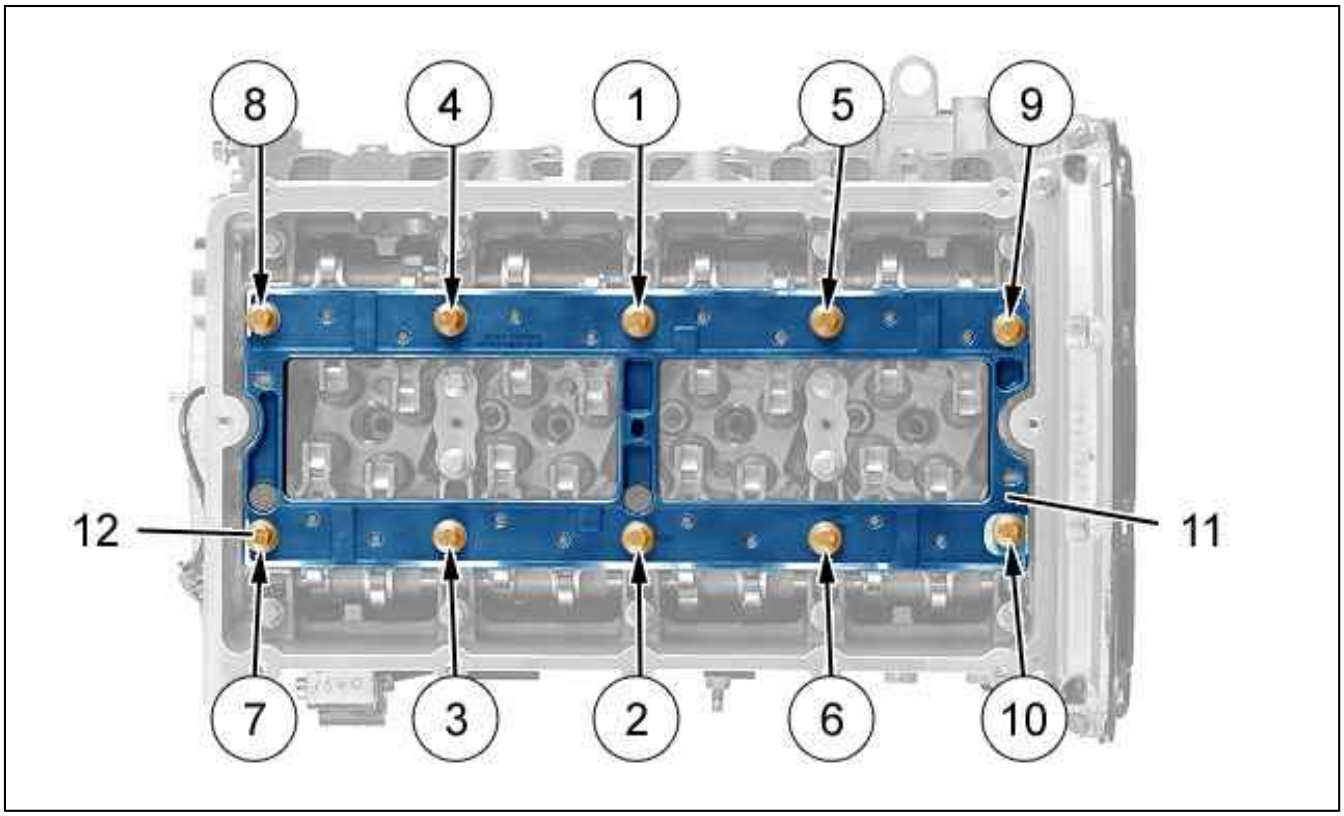

Figure : B1DG0T8D

CAUTION : Keep to the sequence of tightening as well as the tightening torques .

Refit :

- The rockers support housing (11)
- The bolts (12)

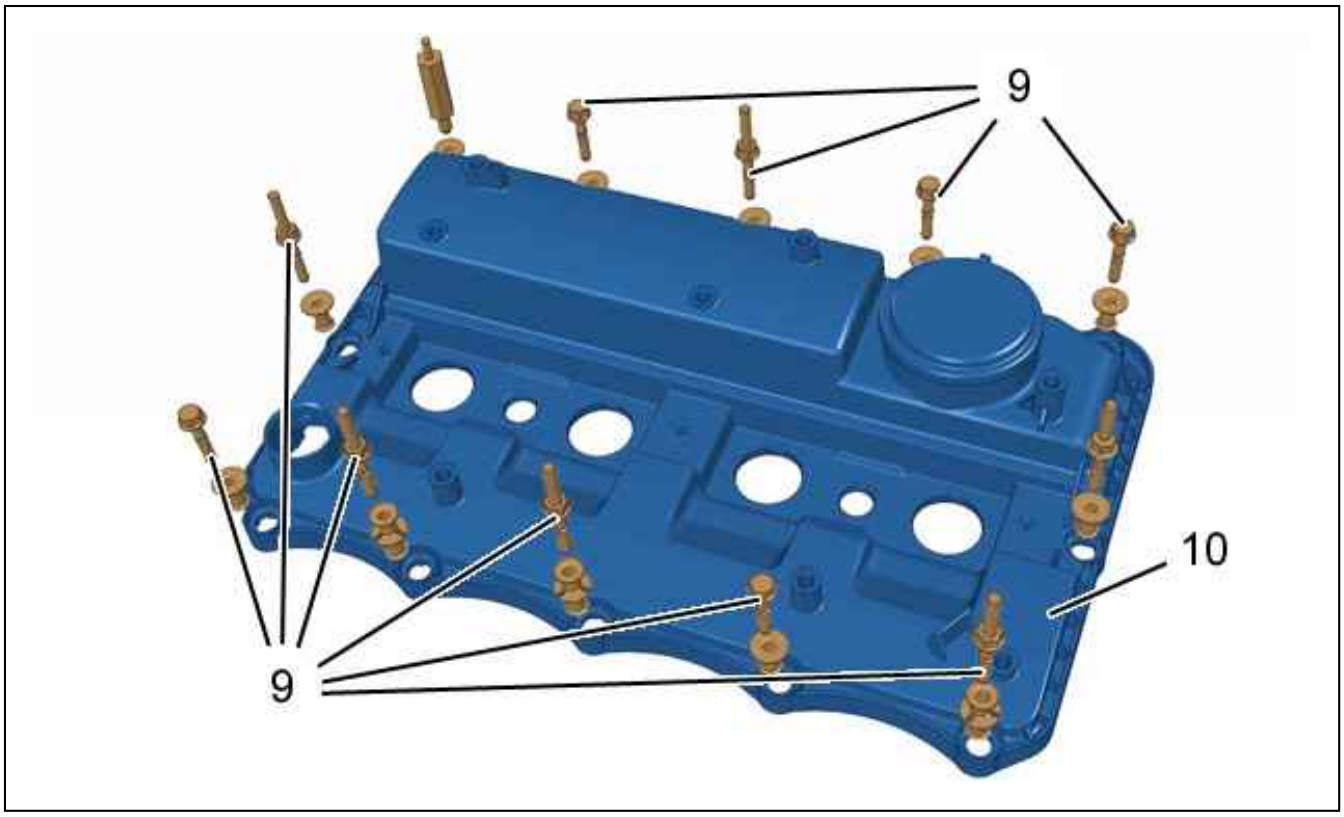

Figure : B1DG0T9D

CAUTION : Always replace the cylinder head cover seals.

CAUTION : Take care with the positioning of the fixings (9) of the cylinder head cover (10).

Refit :

- The cylinder head cover (10) fitted with new injector seals
- The 12 fixings (9) of the cylinder head cover (10)

CAUTION : Keep to the sequence of tightening as well as the tightening torques .

Refit :

- The vacuum pump and support (4) assembly Fit new seals ((7), (8))
- The EGR heat exchanger (5)
- The high pressure fuel pump support (1)

Couple up :

- The pipe (6)
- The pipe (3)
- The vacuum pipe (2)

Refit :

- The fuel high pressure pump
- The injectors
- The expansion bottle and power steering oil reservoir support
- The longitudinal engine support bar

Remove :

- The engine top mounting

- The intermediate engine mounting

Refit :

- The timing chain
- The alternator and air conditioning compressor drive belt guide rollers
- The auxiliary equipment drive belt
- The front panel upper crossmember
- The bonnet opening control
- The right-hand headlamp
- The protection plates under the engine
- The front right mud guard
- The upper central bumper

Fill and bleed the engine cooling circuit.

CAUTION : Perform the operations to be carried out following reconnection of the battery.

Reconnect the battery.

CHECK : SETTING THE VALVE TIMING

ESSENTIAL : Observe the safety and cleanliness recommendations .

1. Tooling

Equipment :

- Transverse engine support bar
- Trolley jack

tool	Reference	Designation
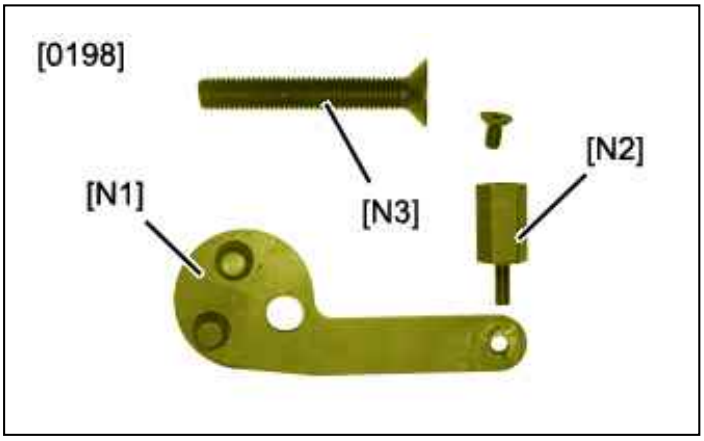 Figure : E5AB17CT	[0198-N1]	Setting plate
	[0198-N2]	Pin
	[0198-N3]	Crankshaft front screw
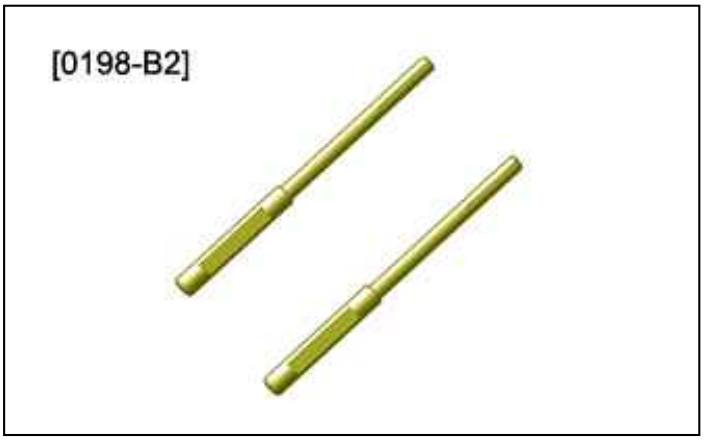 Figure : E5AG08ST	[0198-B2]	camshaft gear setting rod
	[0198-G]	Timing cover centring pin

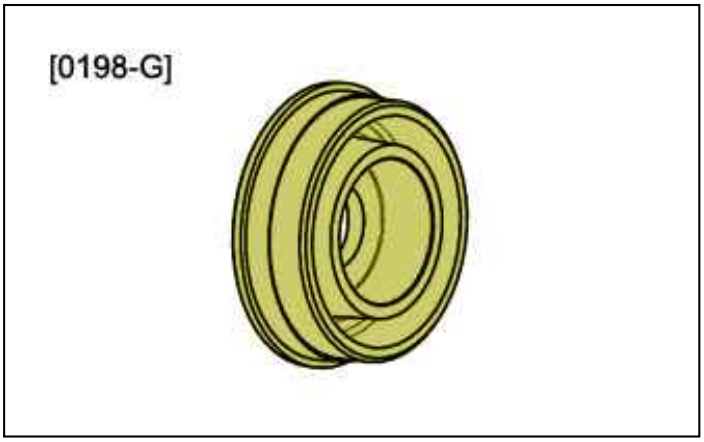

Figure : E5AG08XT

[0198-D]	crankshaft seal fitting tool (timing side)



Figure : E5AG08UT

[0198-M1]	Crankshaft drive tool
[0198-M2]	Crankshaft drive tool bolt
[0198-M3]	Crankshaft driver
[0198-M4]	Crankshaft drive tool bolt
[0198-M5]	Spacer

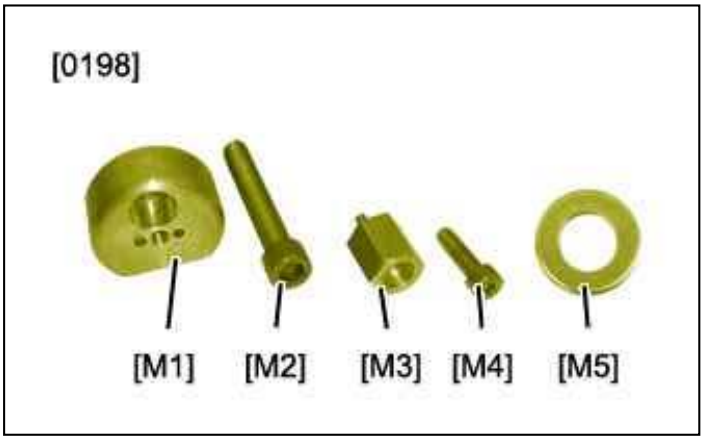

Figure : E5AG08VT

[0199-J]	Cutting chisel

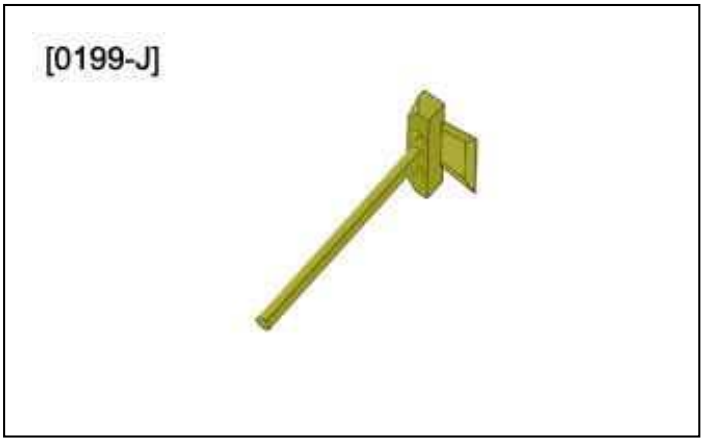

Figure : E5AB0QZT

2. Removing

Place the vehicle on a 2-post lift.
Remove the front right-hand wheel.
Disconnect the battery negative terminal.
Remove :

- The protection plates under the engine (RH side)
- The front right mud guard
- The headlamps
- The accessory belts (according to equipment)
- The alternator and air conditioning compressor drive belt guide rollers Check the electrical operation of the equipment
- The air filter casing

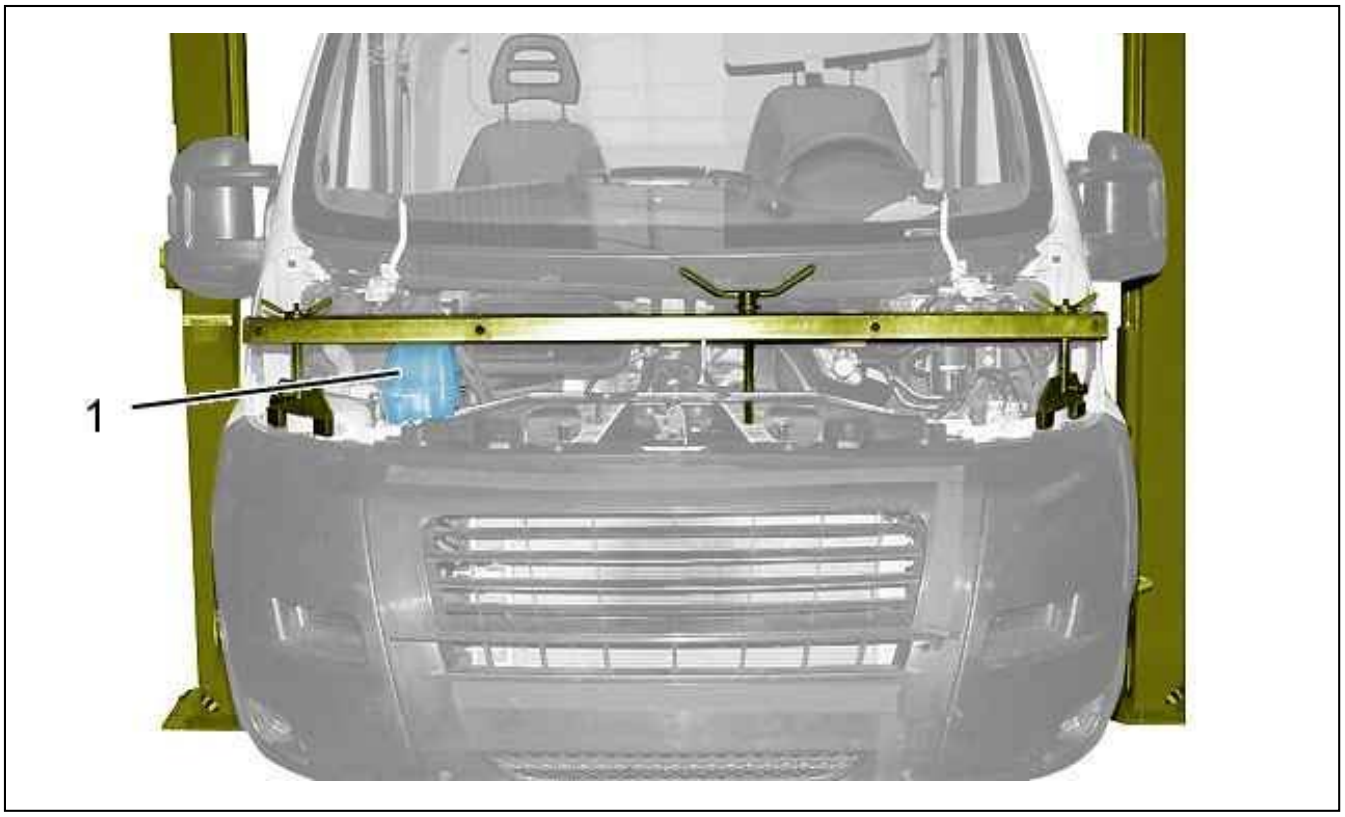

Figure : B1EG0YDD

Remove the power steering fluid reservoir and expansion bottle assembly (1).
Suspend the engine by its lifting rings ; Using the transverse engine support bar.

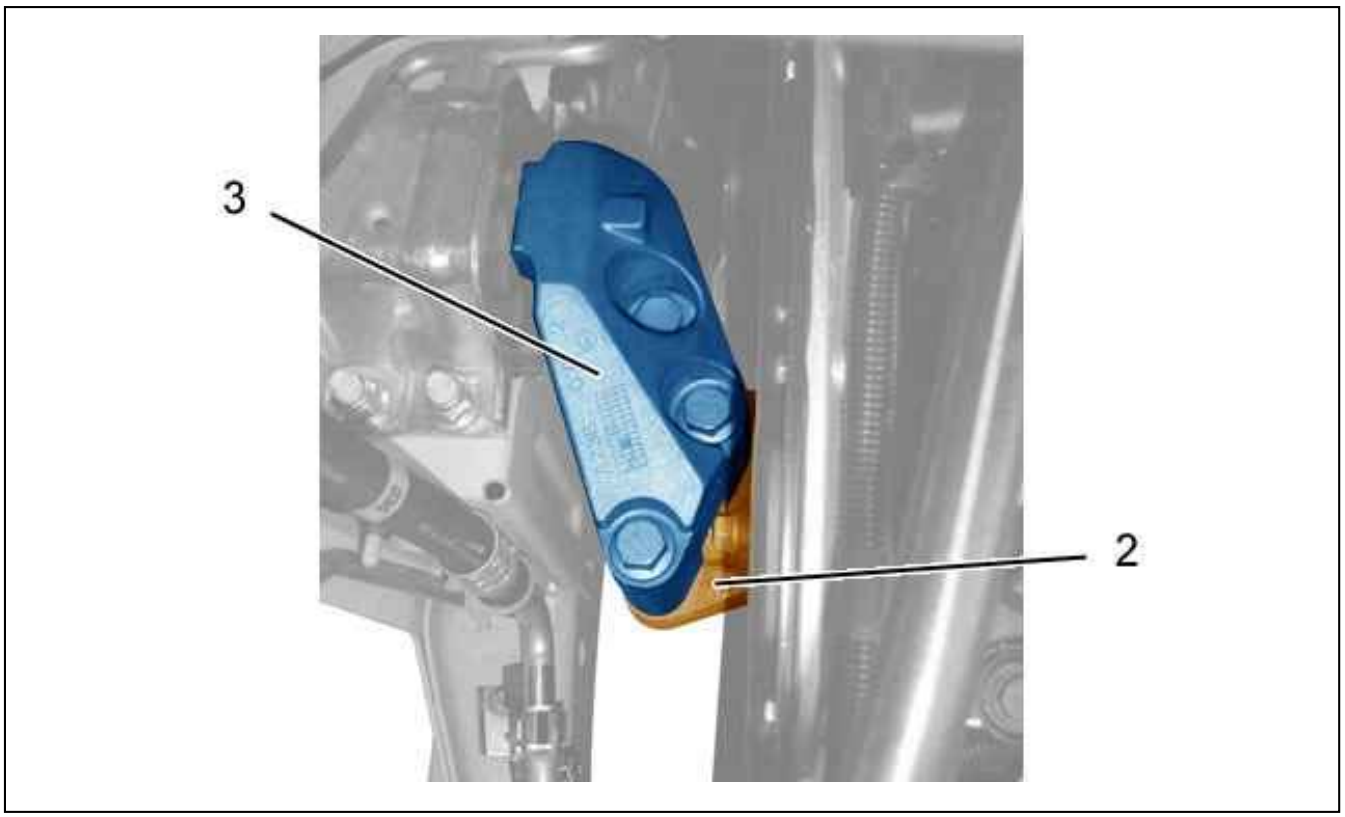

Figure : B1EG0YED

Remove :

- The engine top mounting (3)
- The intermediate engine mounting (2)

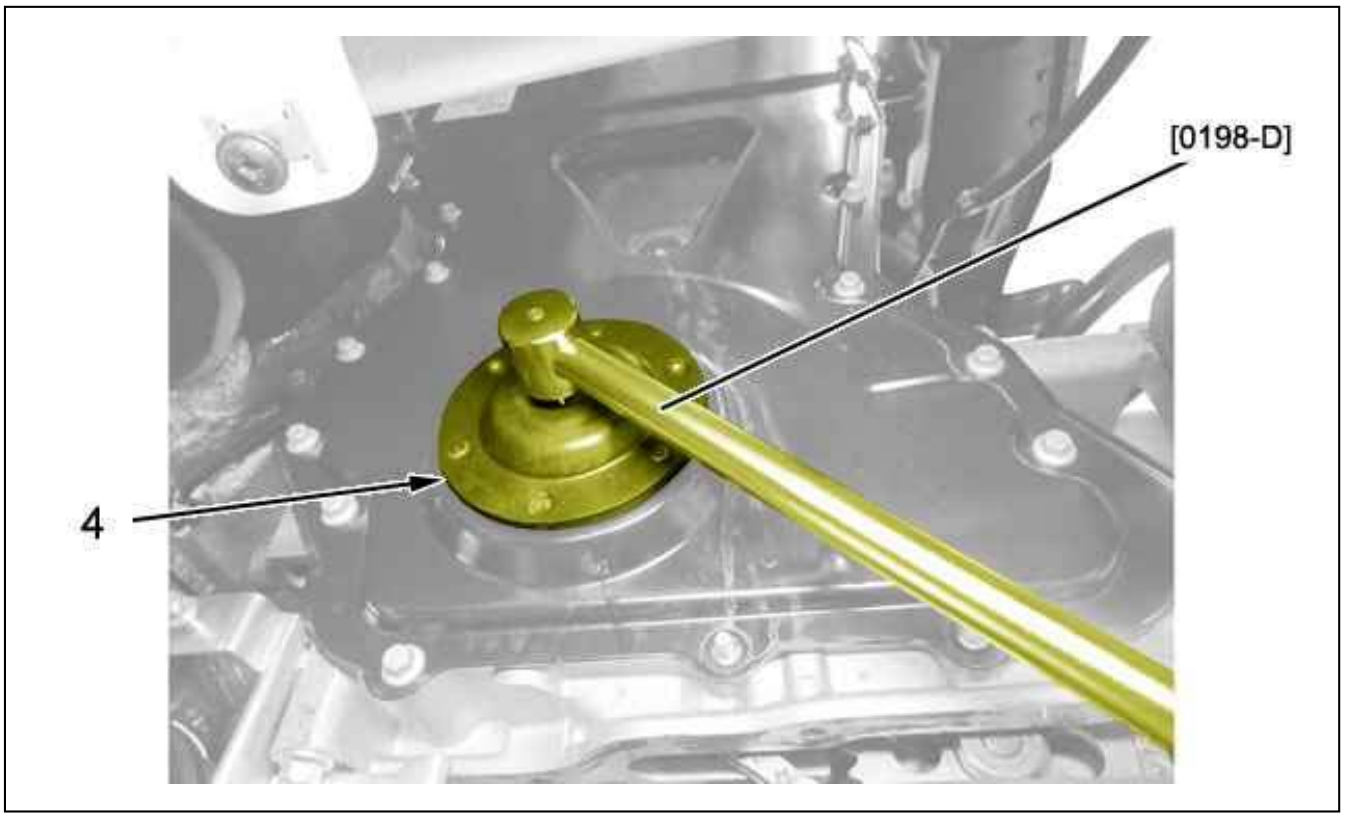

Figure : B1EG0YFD

Release the ring seal (4) : Give it a quarter turn anti-clockwise ; Using tool [0198-D].

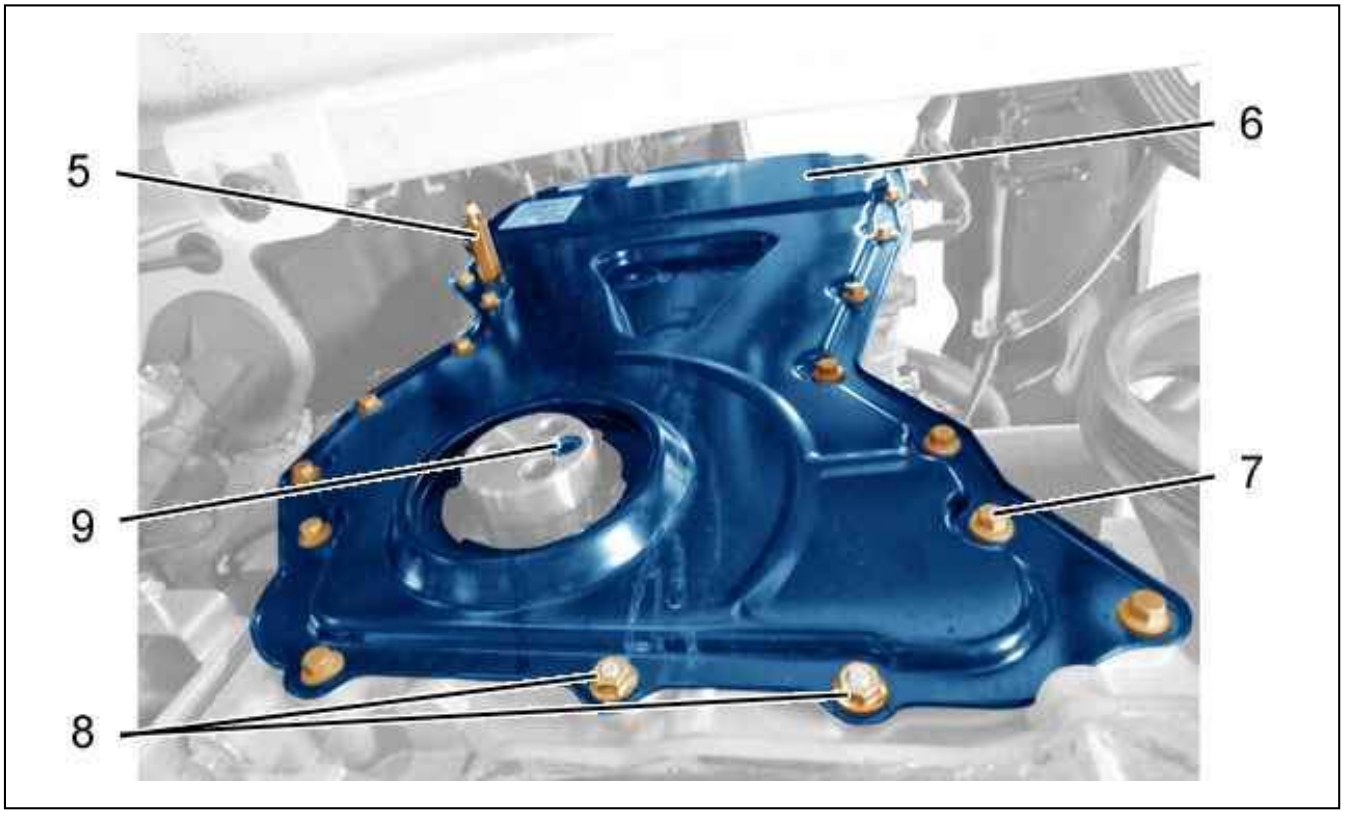

Figure : B1EG0YGD

CAUTION : Detach the timing cover (6) : Start with the bolts at the top ; Using tool [0199-J].

Remove :

- The pillar screw (5)
- The 19 bolts (7)
- The 2 nuts (8)
- The timing cover (6)
- The (9) bolt

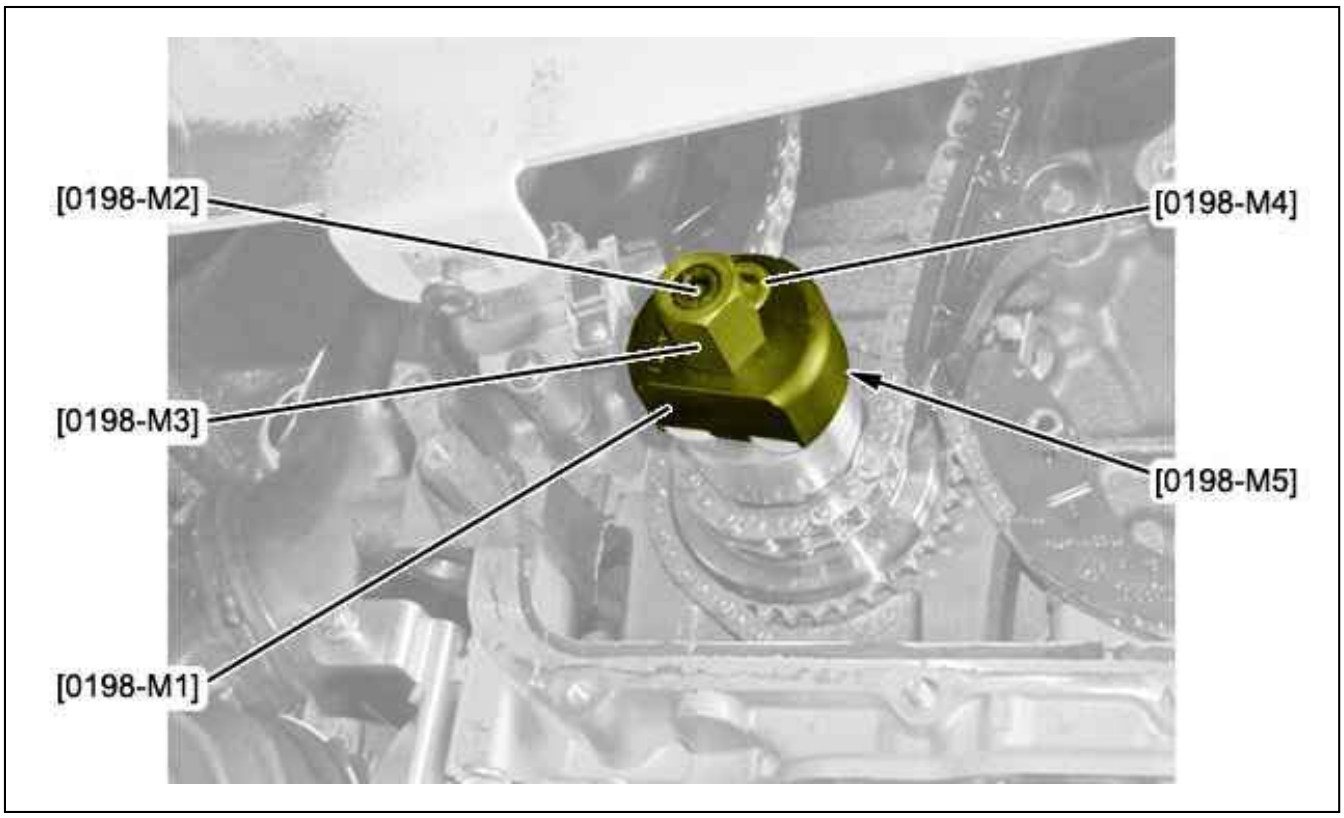

Figure : B1EG0YHD

Position the tools [0198-M1], [0198-M2], [0198-M3], [0198-M4], [0198-M5].

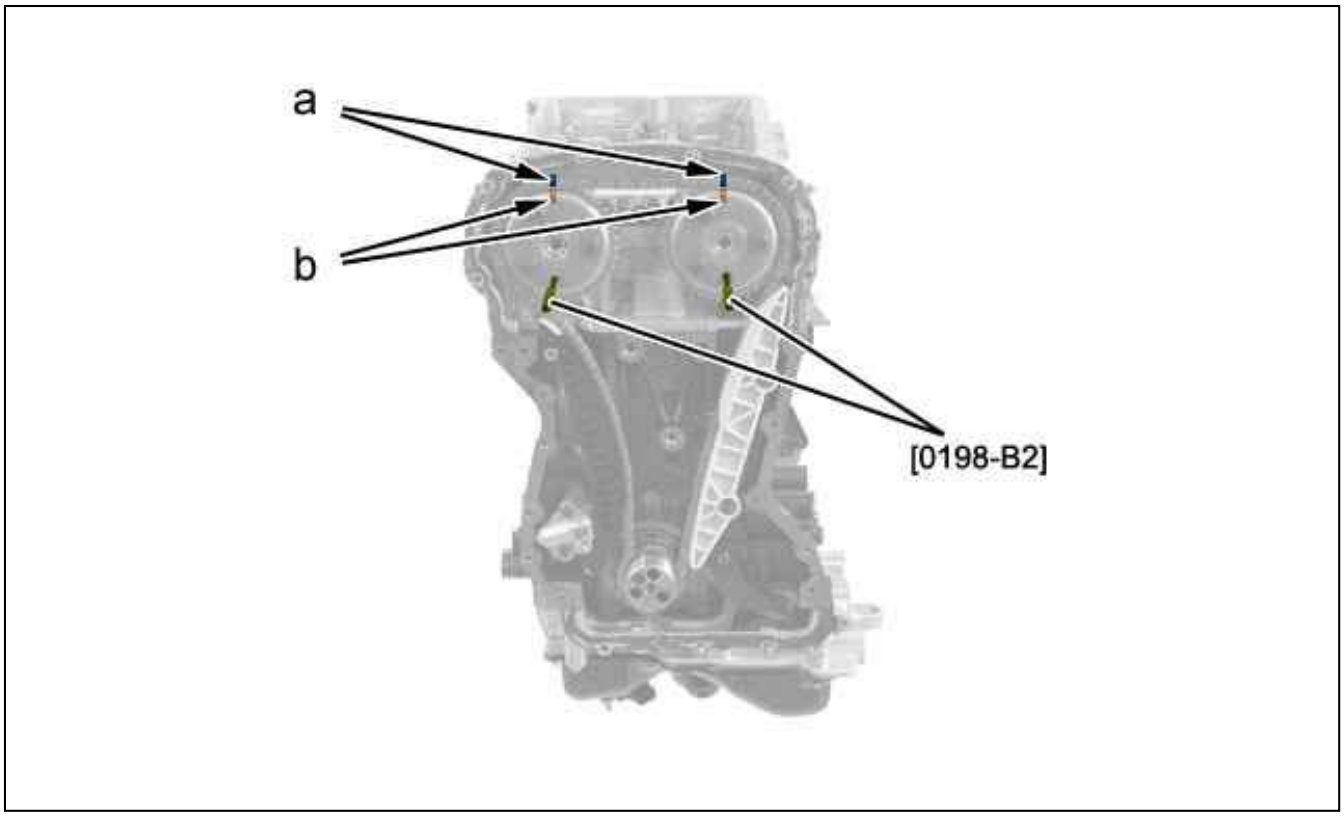

Figure : B1ED0DRD

Turn the engine, to line up the markings "a" on the timing chain with the markings "b" on the camshaft drive pinions ; Using the tools [0198-M1], [0198-M2], [0198-M3], [0198-M4], [0198-M5].

CAUTION : If it is not possible to align the timing chain marks at "a" with the camshaft drive sprocket marks at "b", set the camshafts again by carrying out a camshafts removal-refitting operation .

Peg the camshafts ; Using tool [0198-B2].
Remove the tools [0198-M1], [0198-M2], [0198-M3], [0198-M4], [0198-M5].

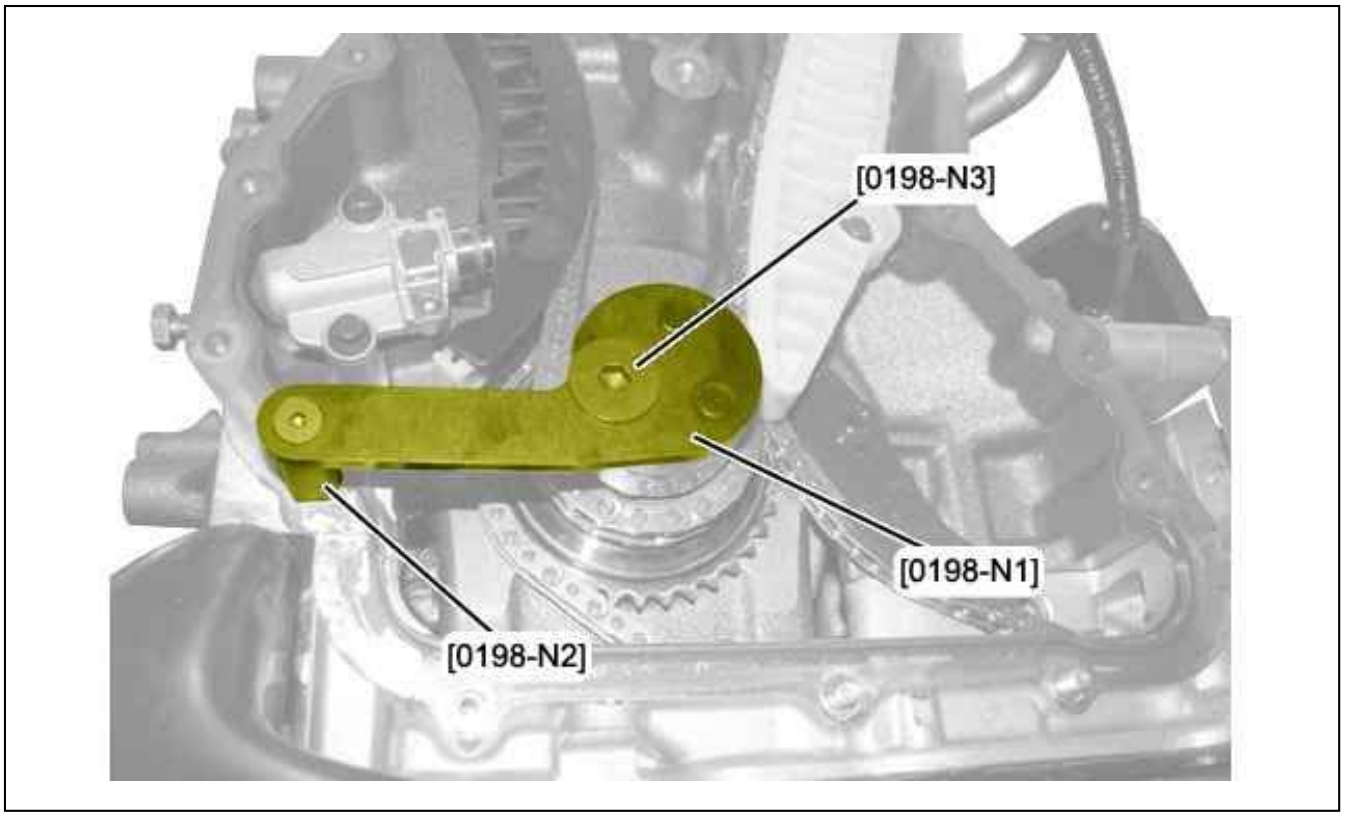

Figure : B1ED0DTD

Position :

- The tool [0198-N2] on the casing
- The tool [0198-N1] on the crankshaft
- The [0198-N3] bolt

N.B. : If the screws of the tool [0198-N2] do not position themselves correctly with the tool [0198-N2] ; Slightly move the crankshaft so that the tools line up.

If pegging is impossible, 2 solutions :

- Check the wear on the timing chain and chain guides
- Check that the tightening of the camshaft pulley bolts is correct

Replace the faulty parts if necessary.

3. Check

CAUTION : Just prior to refitting, carry out the checks below.

Check the condition of the timing chain.
Check the condition of the chain guides.
Check the condition of the chain tensioner.

4. Refitting

CAUTION : Adhere to the tightening torques.

Tightening torques :

- Engine

- Engine-gearbox assembly mounting

Remove :
- The tool [0198-B2]
- The tool [0198-N1]; [0198-N2]; [0198-N3]

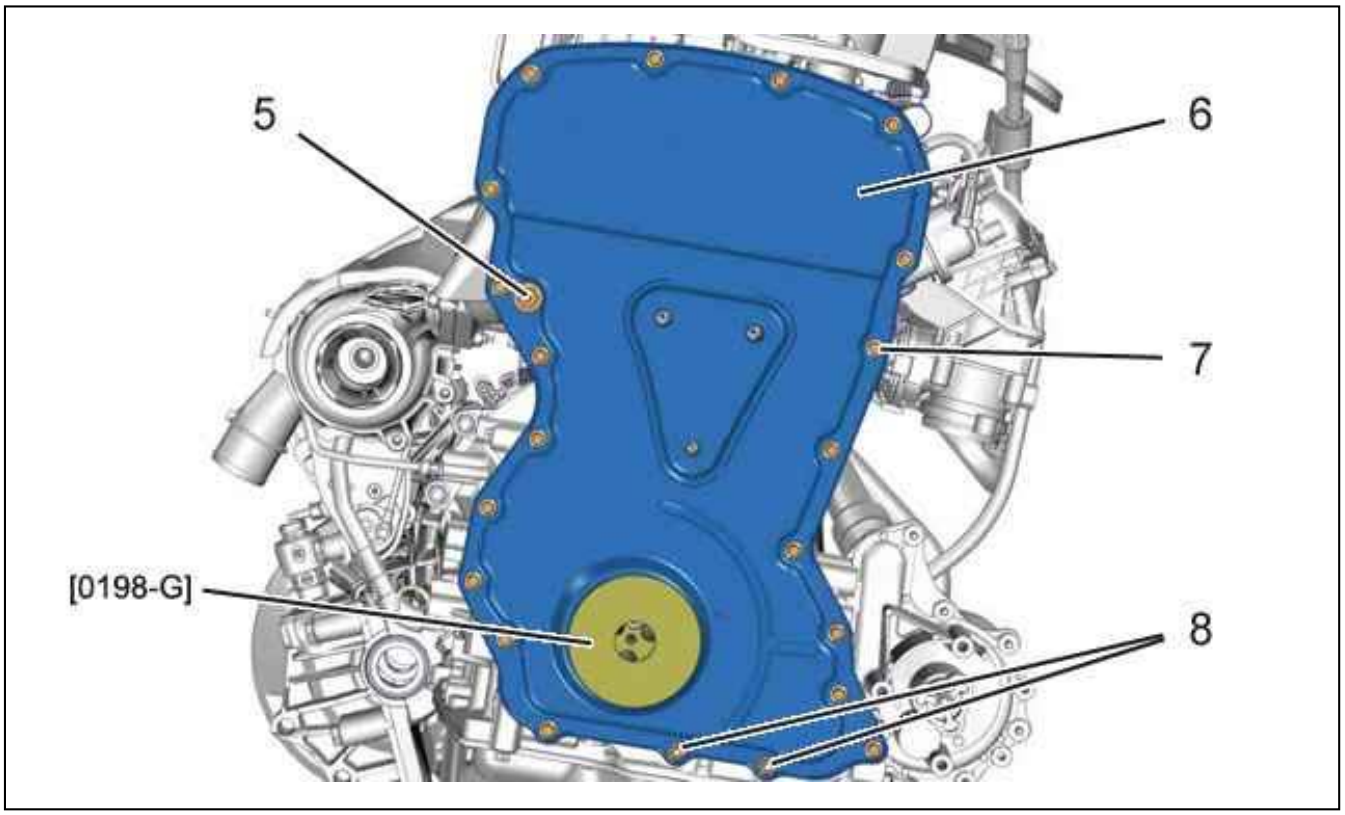

Figure : B1EG0YPD

CAUTION : Clean the gasket faces with an approved descaling product. Do not use abrasives or sharp tools on the joint faces. The seal faces should not show any traces of impacts or scratches.

CAUTION : Always replace : The oil sump (6).

CAUTION : Clean the bolt threads and taps before refitting.

Apply a bead of index "E10" sealant to the periphery of the timing cover (6).
Refit :
- The timing cover (6) (new)
- The 19 bolts (7) (without tightening)
- The 2 nuts (8) (without tightening)
- The pillar screw (5)

Centre the timing cover (6) ; Using tool [0198-G].
Tighten :
- The 19 bolts (7)
- The nuts (8)

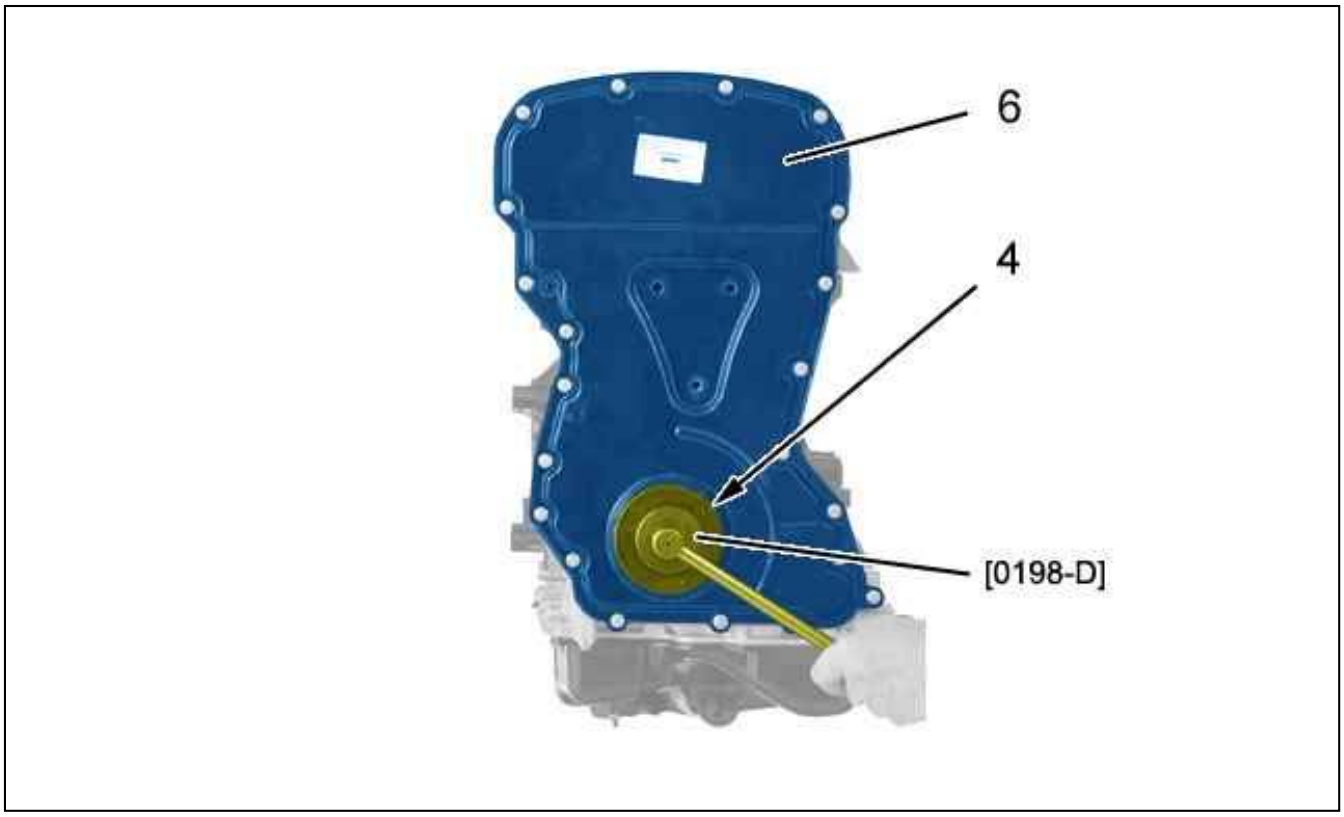

Figure : B1EG0YQD

Refit the ring seal (4) (Fitted with its fitting cone).
Engage the ring seal (4) in the timing cover (6).
Remove the fitting cone from the ring seal (4).
Lock the ring seal (4) : Give it a quarter turn clockwise ; Using tool [0198-D].

CAUTION : Superimpose the upper engine mounting on the intermediate engine mounting, in order to line up the holes ; Using a workshop jack under the oil sump.

Refit :

- The intermediate engine mounting (2)
- The engine top mounting (3)

Remove the transverse engine support bar.
Refit :

- The power steering fluid reservoir and expansion bottle assembly (1)
- The air filter housing
- The alternator and air conditioning compressor drive belt guide rollers Check the electrical operation of the equipment
- The accessory belts (according to equipment)
- The headlamps
- The front right mud guard
- The protection plates under the engine (RH side)
- The front right wheel

Return the vehicle to its wheels.
Tighten the wheel bolts.

CAUTION : Perform the operations to be carried out following reconnection of the battery.

Reconnect the battery negative terminal.
Start the engine.
Road test the vehicle.
Clear the faults in the memory.

REMOVING - REFITTING : TIMING CHAIN

ESSENTIAL : Observe the safety and cleanliness recommendations .

1. Tooling

Equipment :

- Transverse engine support bar
- Trolley jack

tool	Reference	Designation
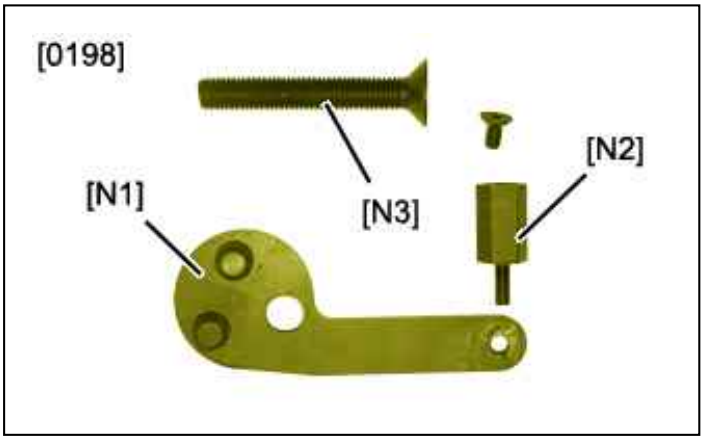 Figure : E5AB17CT	[0198-N1]	Setting plate
	[0198-N2]	Pin
	[0198-N3]	Crankshaft front screw
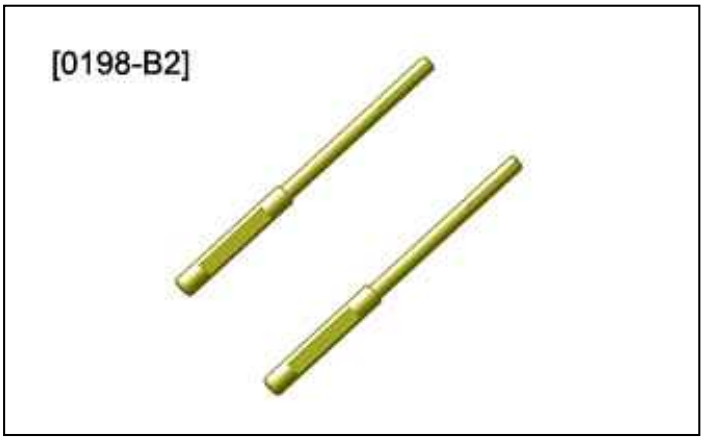 Figure : E5AG08ST	[0198-B2]	camshaft gear setting rod
	[0198-J]	roller locking pin

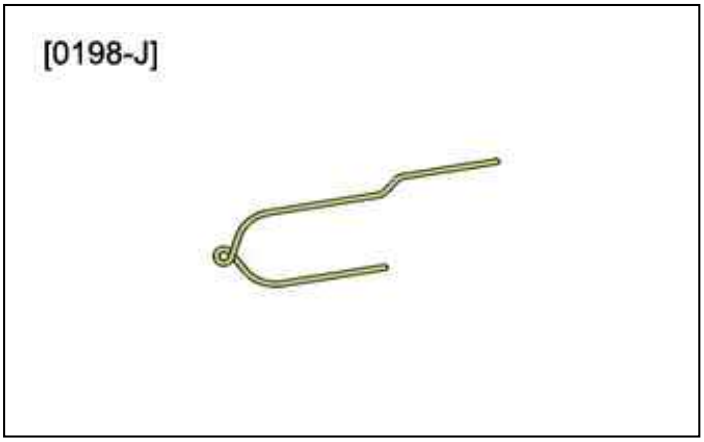 Figure : E5AB0RQT		
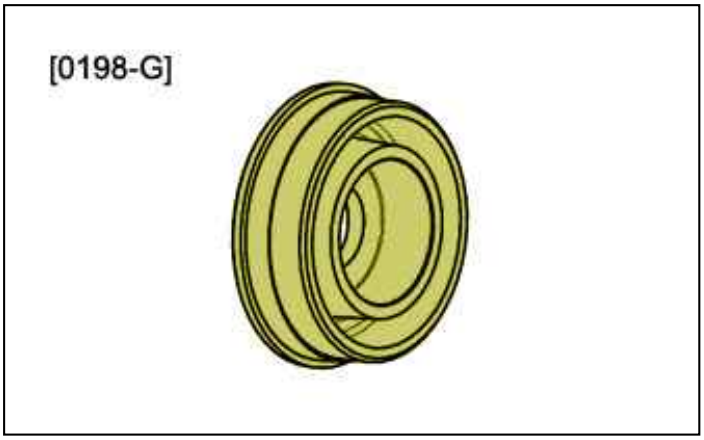 Figure : E5AG08XT	[0198-G]	Timing cover centring pin
 Figure : E5AG08UT	[0198-D]	Crankshaft seal fitting tool (timing side)
	[0198-M1]	Crankshaft drive tool
	[0198-M2]	Crankshaft drive tool bolt

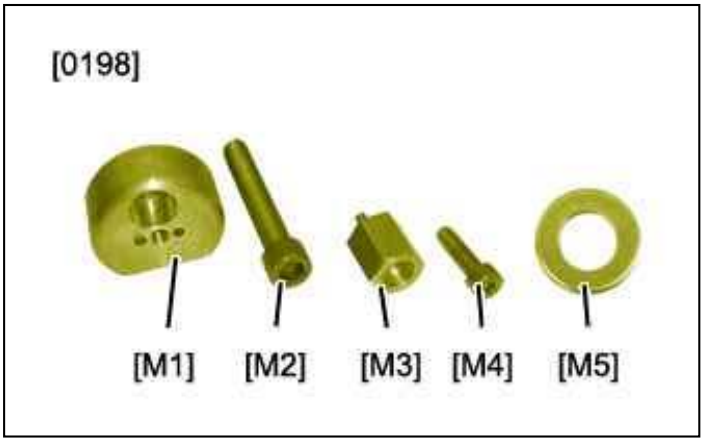

Figure : E5AG08VT

[0198-M3]	Crankshaft driver
[0198-M4]	Crankshaft drive tool bolt
[0198-M5]	Spacer

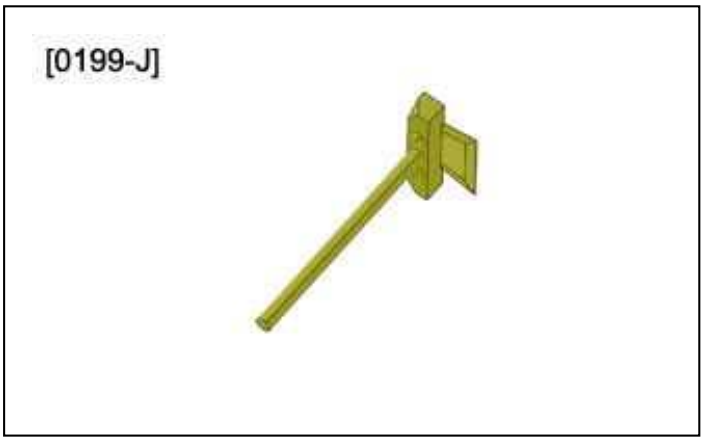

Figure : E5AB0QZT

[0199-J]	Cutting chisel

2. Removing

Place the vehicle on a 2-post lift.
Remove the front right-hand wheel.
Disconnect the battery negative terminal.
Remove :

- The protection plates under the engine (RH side)
- The front right mud guard
- The headlamps
- The accessory belts (according to equipment)
- The alternator and air conditioning compressor drive belt guide rollers Check the electrical operation of the equipment
- The air filter casing

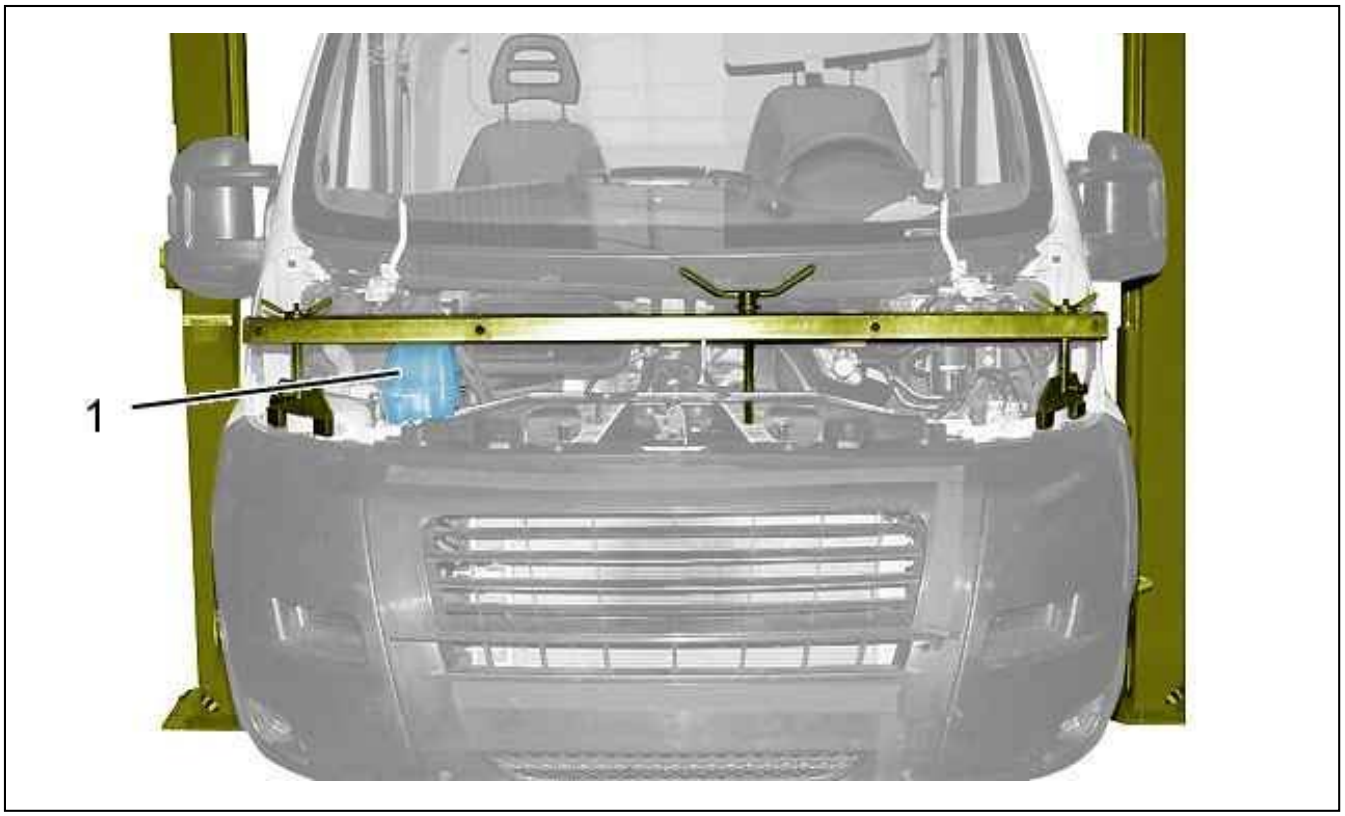

Figure : B1EG0YDD

Remove the power steering fluid reservoir and expansion bottle assembly (1).
Suspend the engine by its lifting rings ; Using the transverse engine support bar.

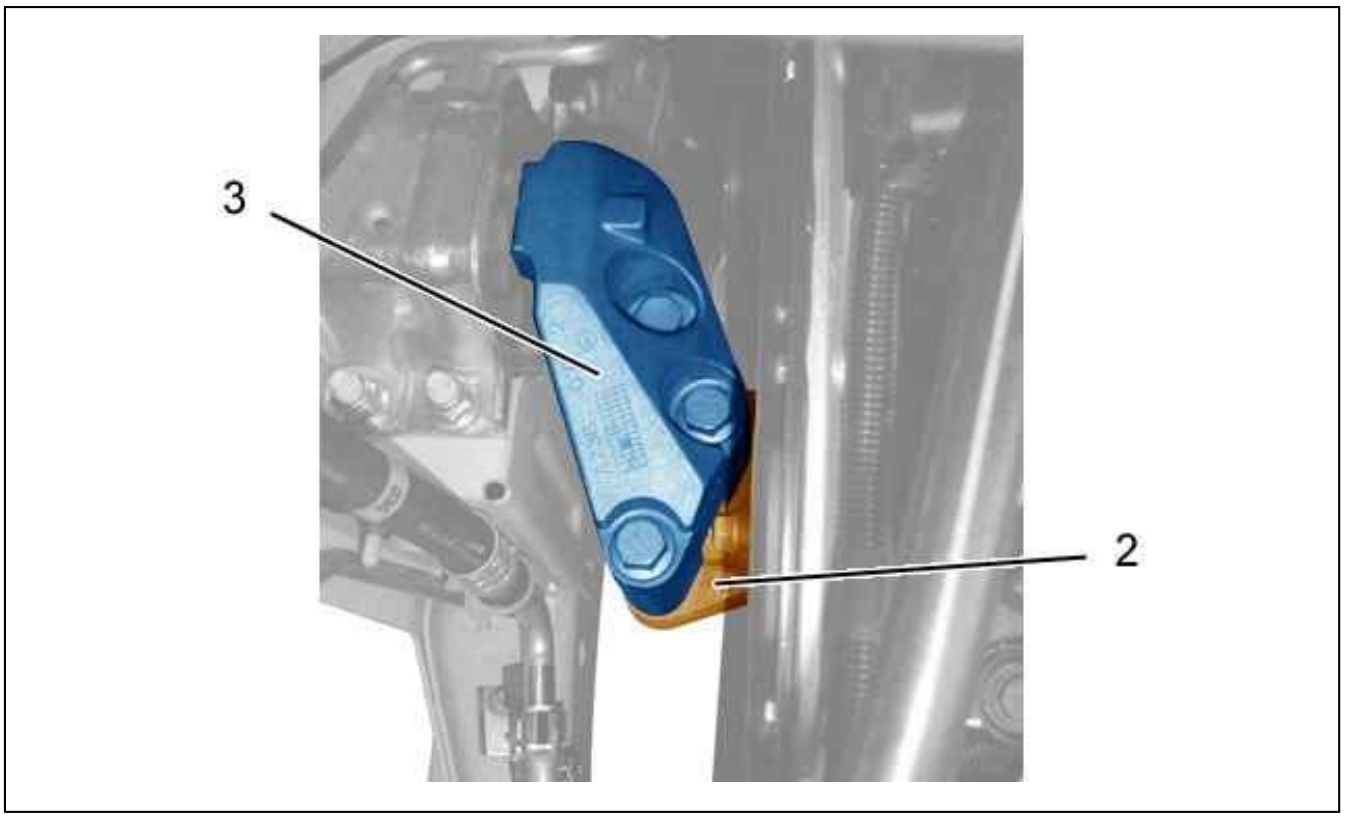

Figure : B1EG0YED

Remove :

- The engine top mounting (3)
- The intermediate engine mounting (2)

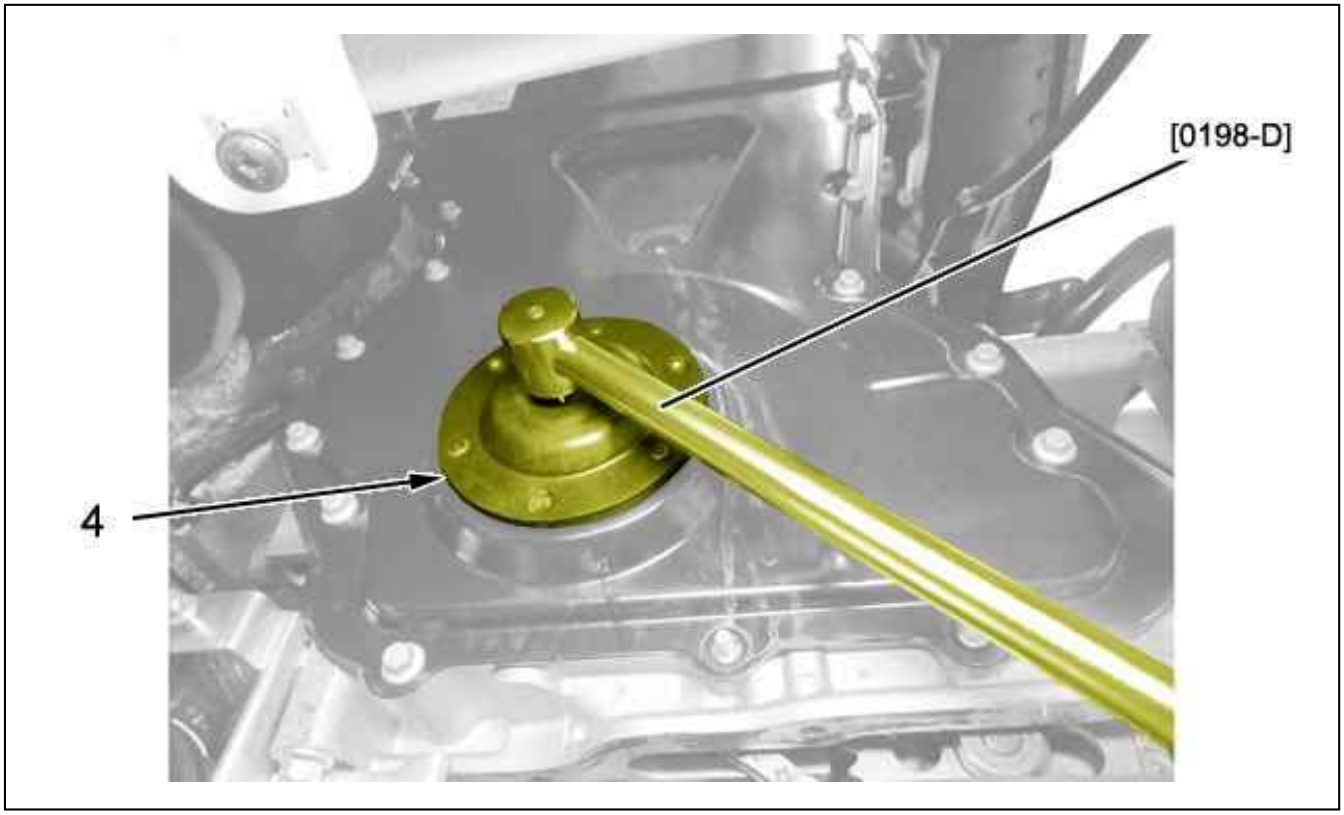

Figure : B1EG0YFD

Turn through 1/4 of a turn anticlockwise and release the ring seal (4) ; Using tool [0198-D].

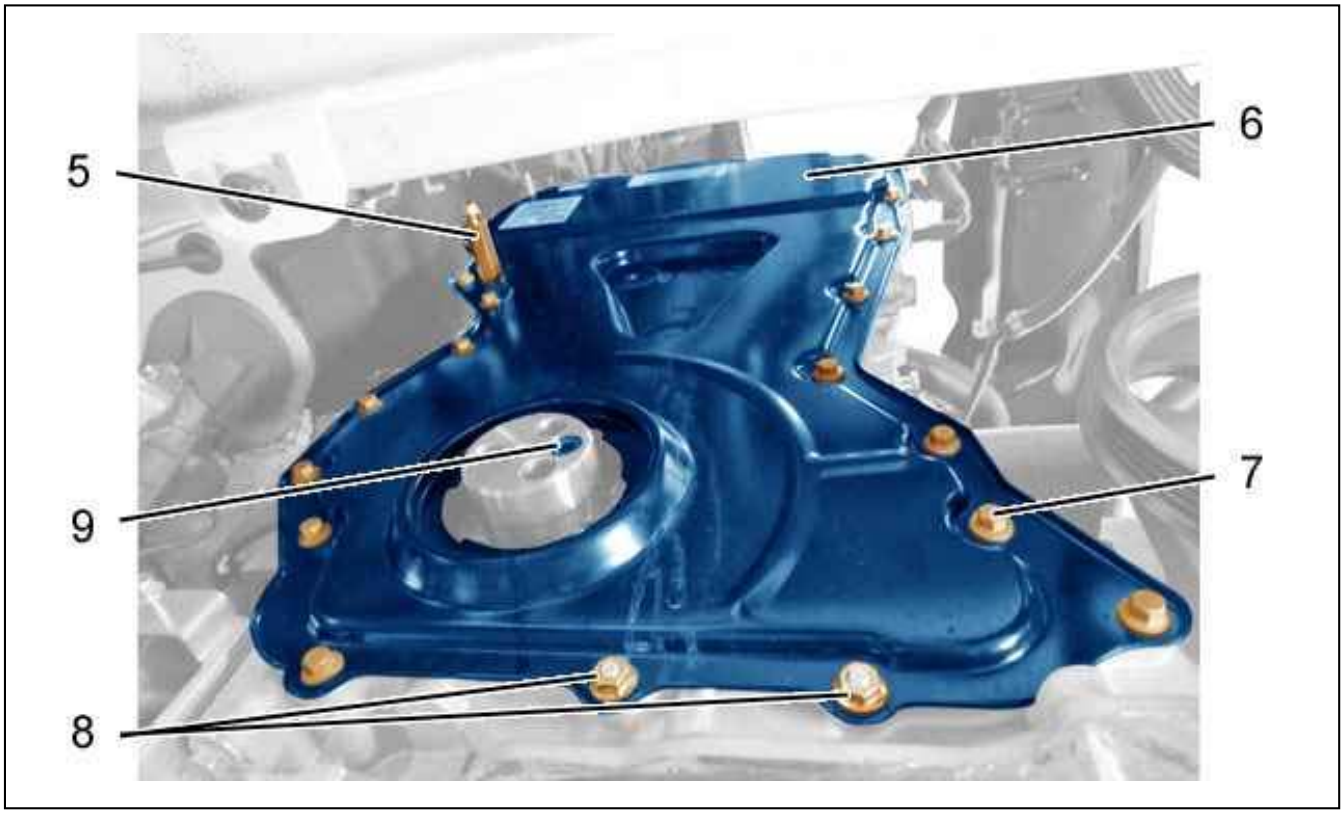

Figure : B1EG0YGD

CAUTION : Detach the timing cover (6) ; Using tool [0199-J] ; Start with the bolts at the top.

Remove :

- The pillar screw (5)
- The 19 bolts (7)
- The 2 nuts (8)
- The timing cover (6)

Remove the fixing screw (9).

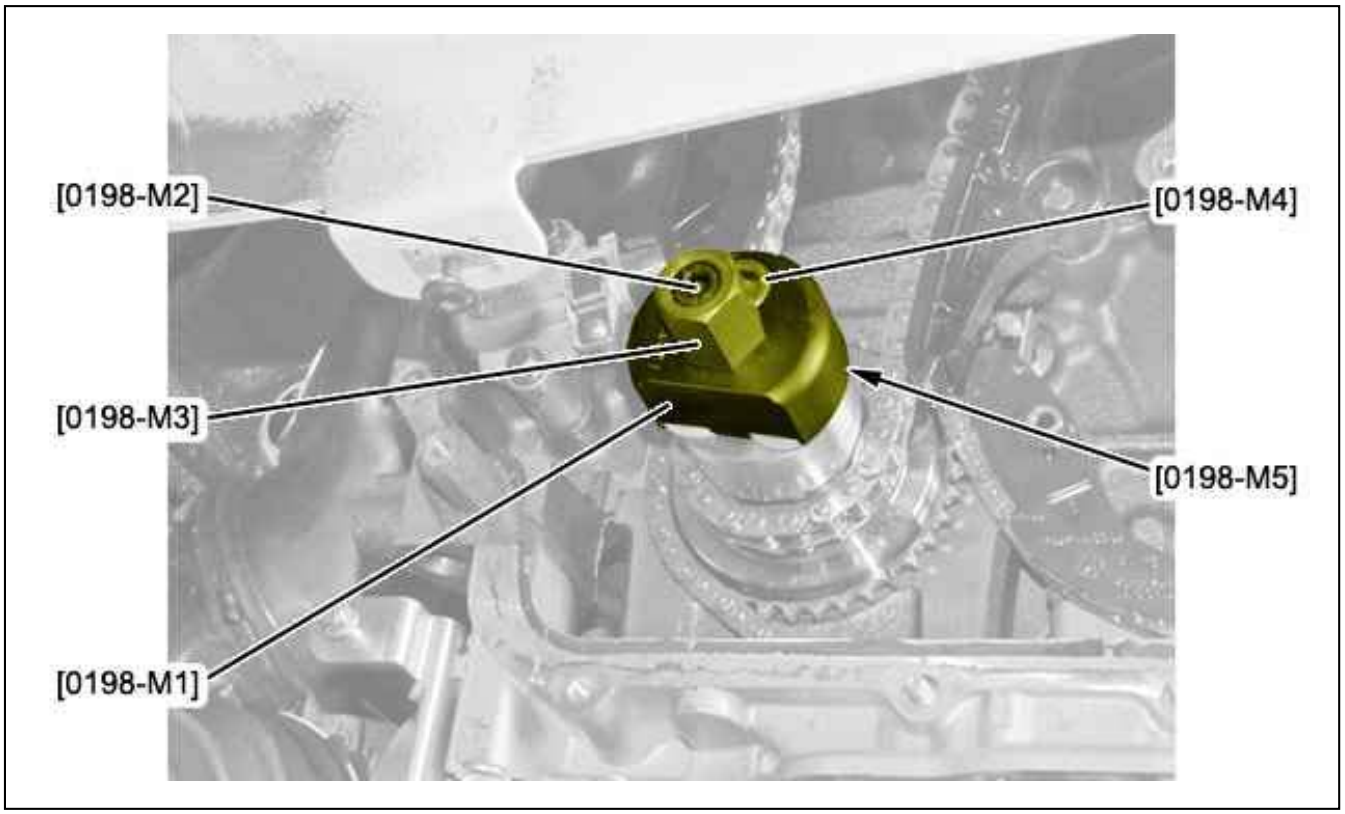

Figure : B1EG0YHD

Put the tools [0198-M1], [0198-M2], [0198-M3], [0198-M4], [0198-M5] in place under [0198-M4].

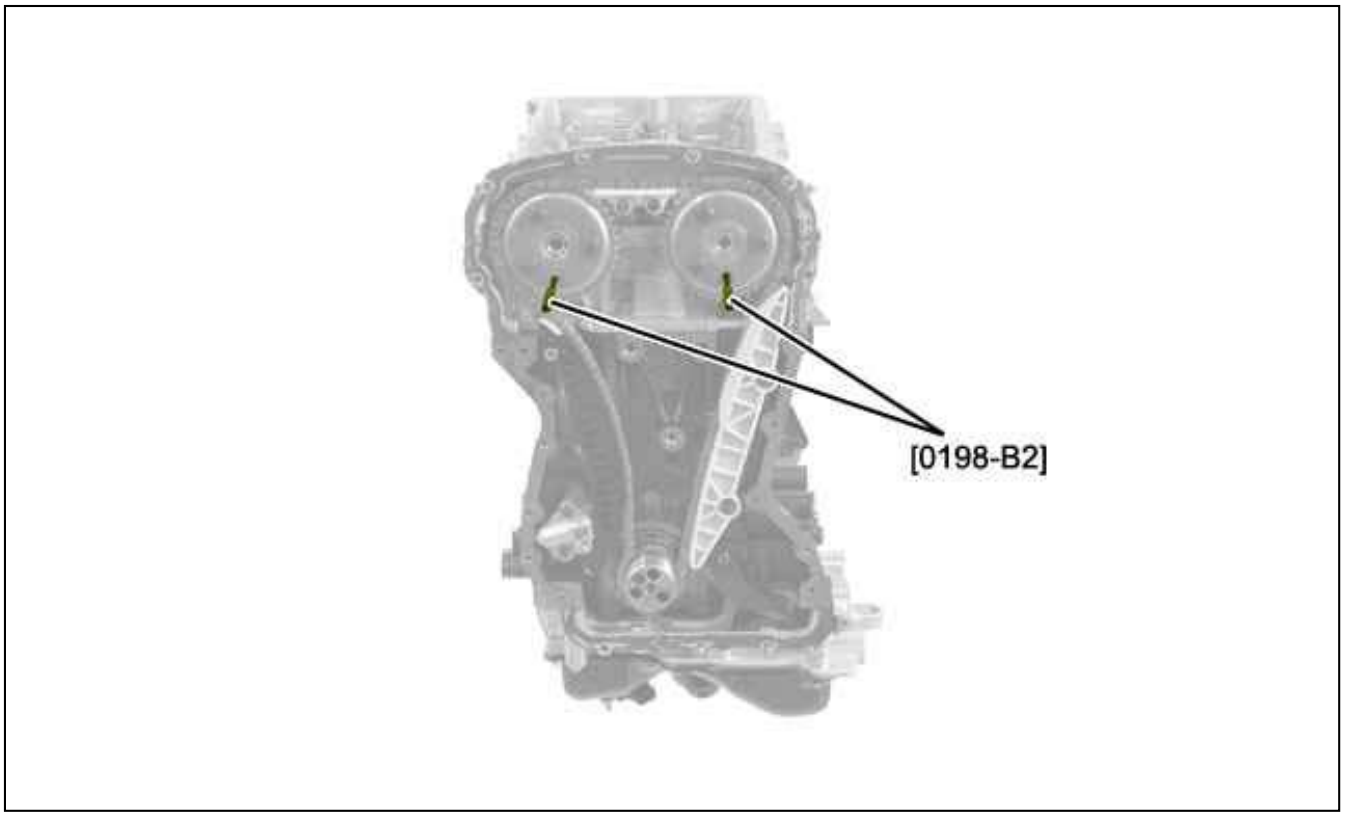

Figure : B1EG0YID

Peg the camshafts ; Using tool [0198-B2] : Turn the crankshaft ; Using the tools [0198-M1], [0198-M2], [0198-M3], [0198-M4], [0198-M5].
Remove the tools [0198-M1], [0198-M2], [0198-M3], [0198-M4], [0198-M5].

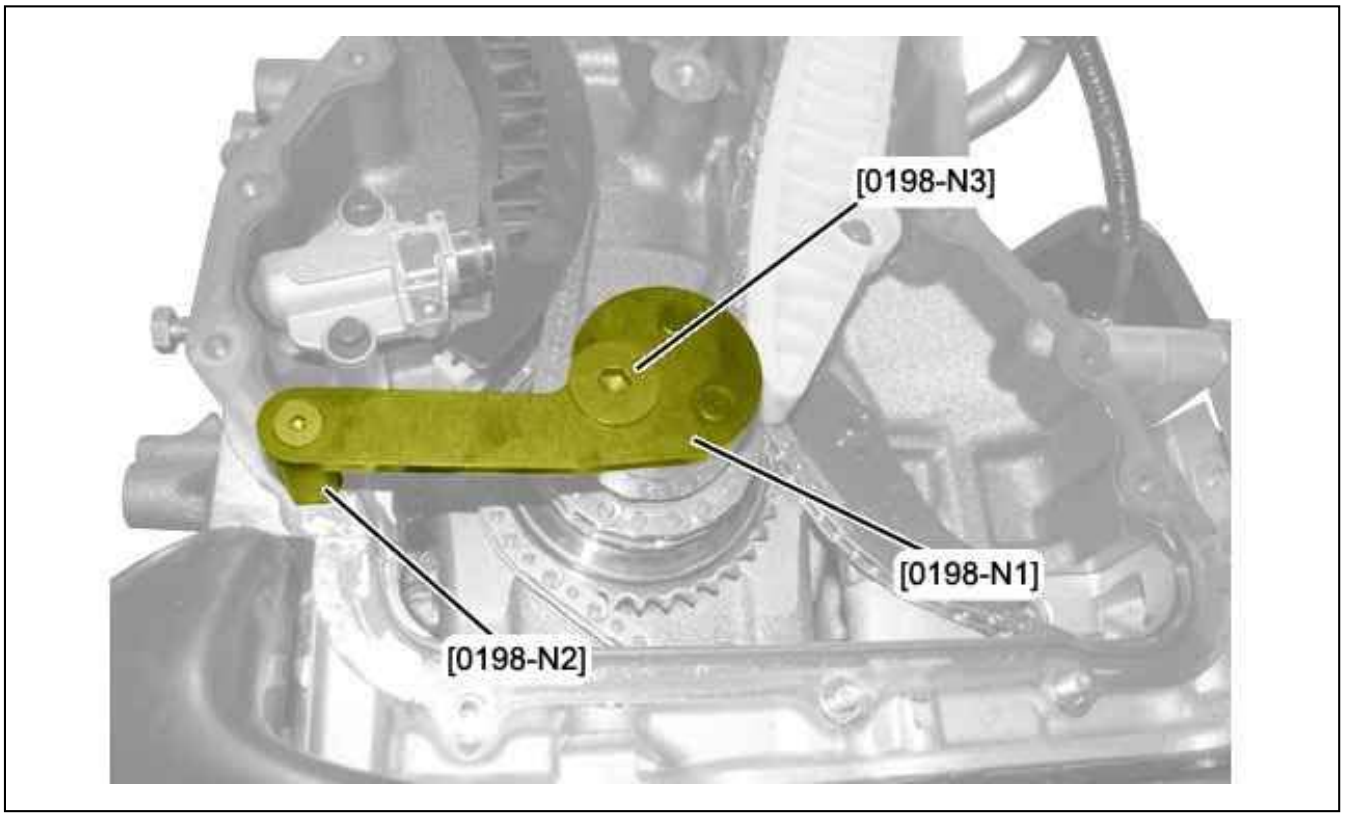

Figure : B1ED0DTD

Position :

- The tool [0198-N2] on the casing
- The tool [0198-N1] on the crankshaft
- The bolt [0198-N3]

N.B. : If the screws of the tool [0198-N2] do not position themselves correctly with the tool [0198-N2] ; Slightly move the crankshaft so that the tools line up.

If pegging is impossible, 2 solutions :

- Check the wear on the timing chain and chain guides
- Check that the tightening of the camshaft pulley bolts is correct

Replace any defective parts (if necessary).

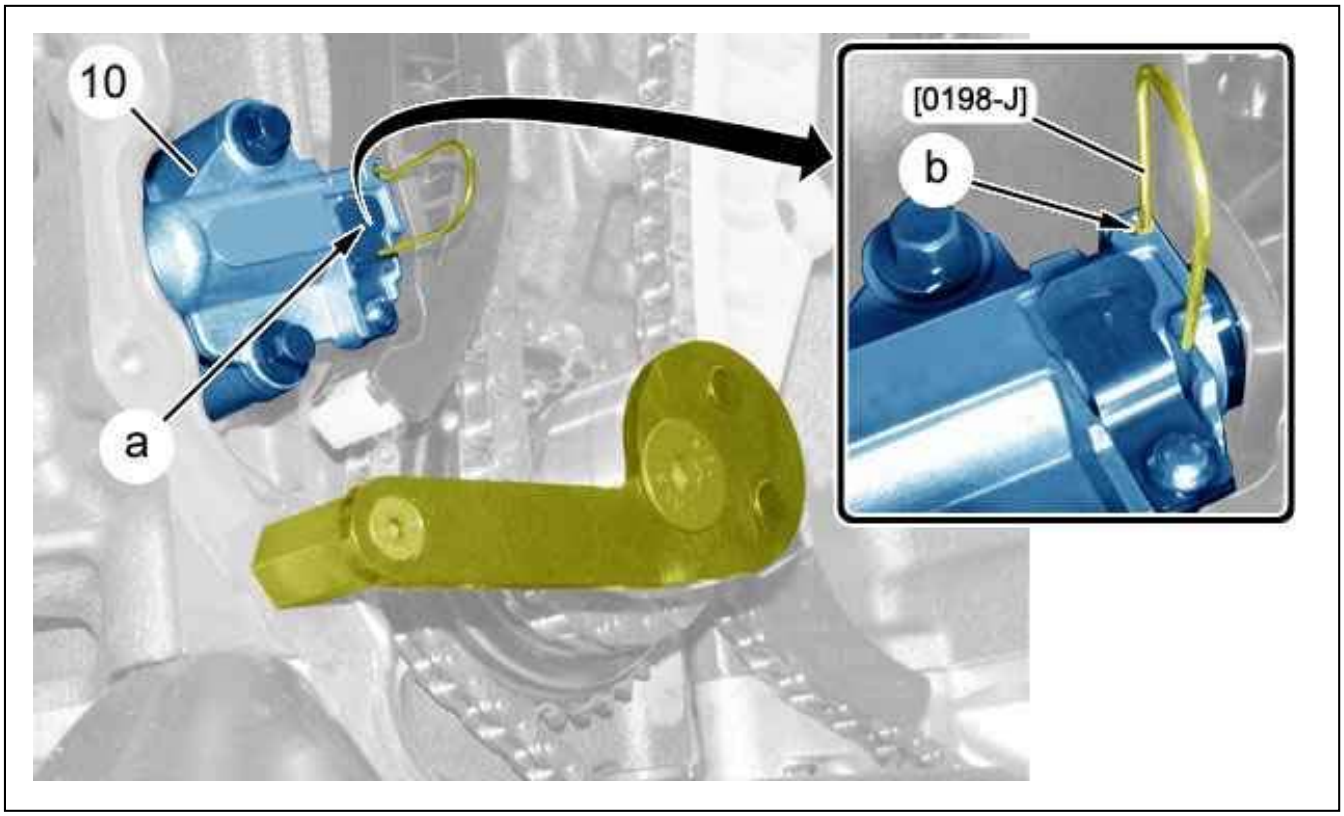

Figure : B1EG0ZHD

Move aside the chain tensioner ratchet (10) (Outwards) (at "a").
Compress the timing chain tensioner (10) (Outwards).
Insert the tool [0198-J] (at "b").

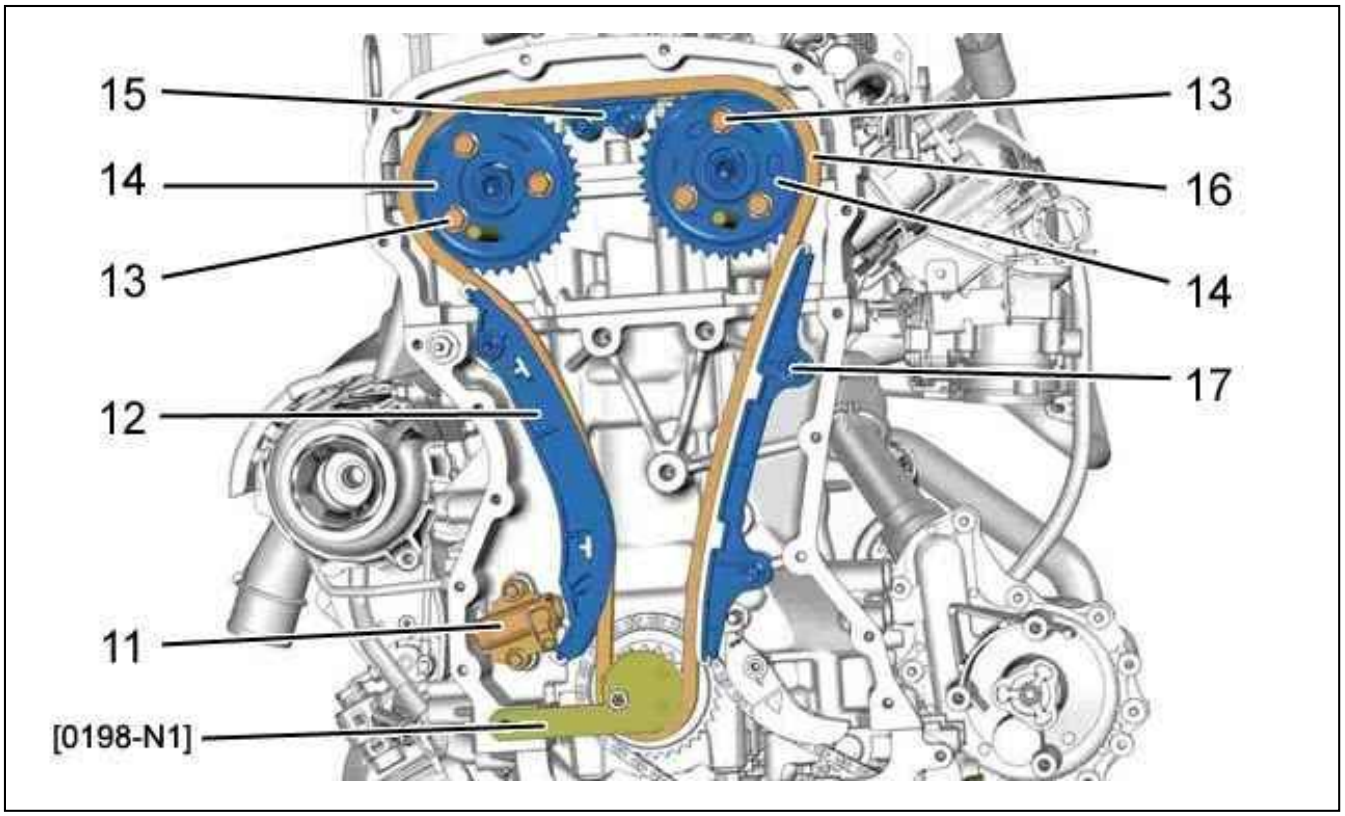

Figure : B1EG0ZID

Remove :

- The upper chain guide (15)
- The timing chain guide (17)
- The timing chain guide (12)
- The bolts (13)
- The camshaft drive sprockets (14)
- The tool [0198-N1]
- The timing chain (16)

CAUTION : If immobilising the vehicle for a prolonged period ; Refit the tool [0198-N1].

Remove the timing chain (11) tensioner (if necessary).

3. Checking

CAUTION : Just prior to refitting, carry out the checks below.

Visually check the wear condition :

- Timing chain
- Timing chain guides
- Chain tensioner

Replace any defective parts.

4. Refitting

CAUTION : Adhere to the tightening torques.

Tightening torques :

- Engine
- Engine/gearbox mountings

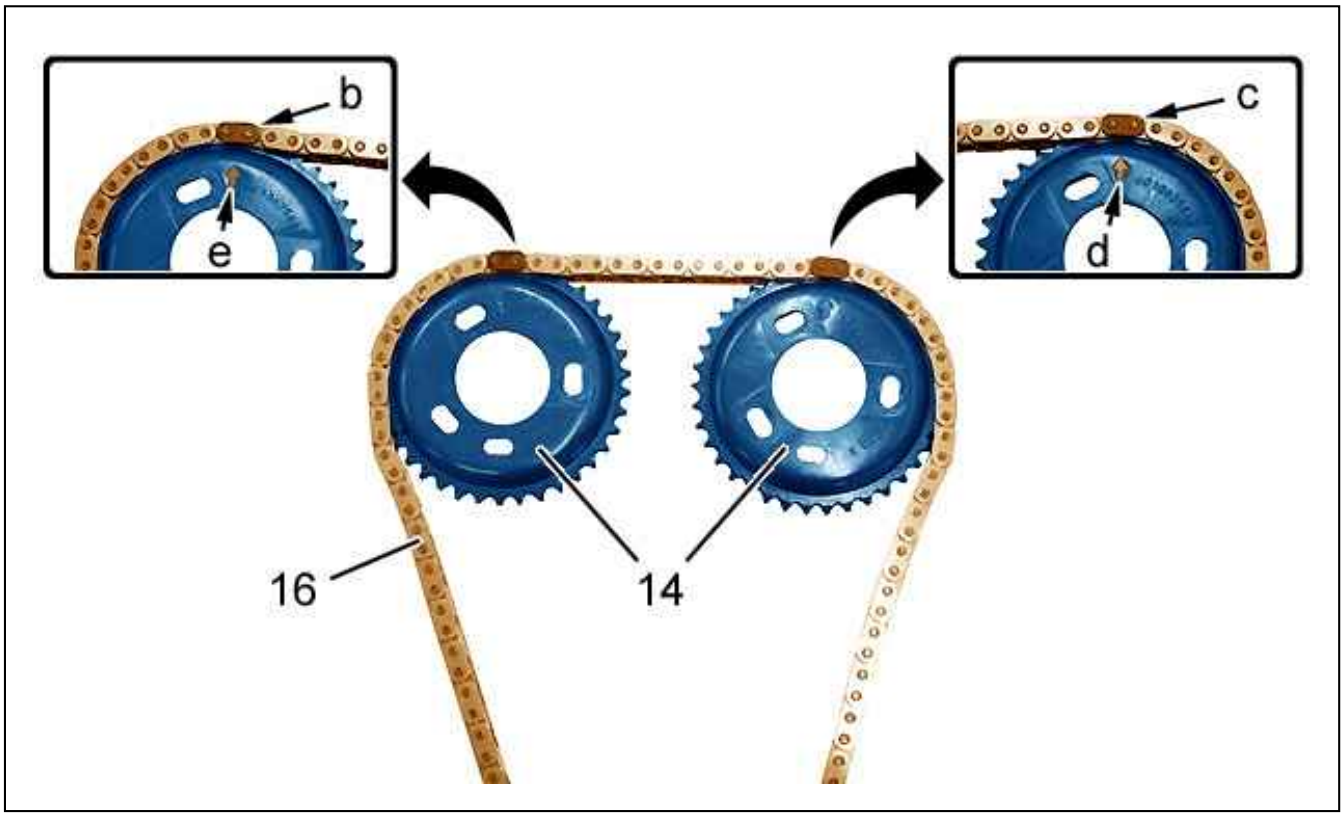

Figure : B1EG0YMD

On the bench :

- Position the timing chain (16) on the camshaft drive sprockets (14)
- Align the links marked in black "b" and "c" with the teeth marked "e" and "d" on the camshaft drive sprockets (14)

Refit the timing chain tensioner (11).

N.B. : 2 operators are required for this operation.

Refit the timing chain (16) and camshaft drive sprockets (14) assembly in order :

- Exhaust camshaft ; Guide on tool [0198-B2]
- Timing chain guide (12)
- Crankshaft double sprocket ; Fit the tool [198-N1]; [198-N2]; [198-N3]
- Induction camshaft

Refit :

- The bolts (13) (without tightening)
- The chain guide (15)
- The chain guide (17)

Remove the tool [0198-J].

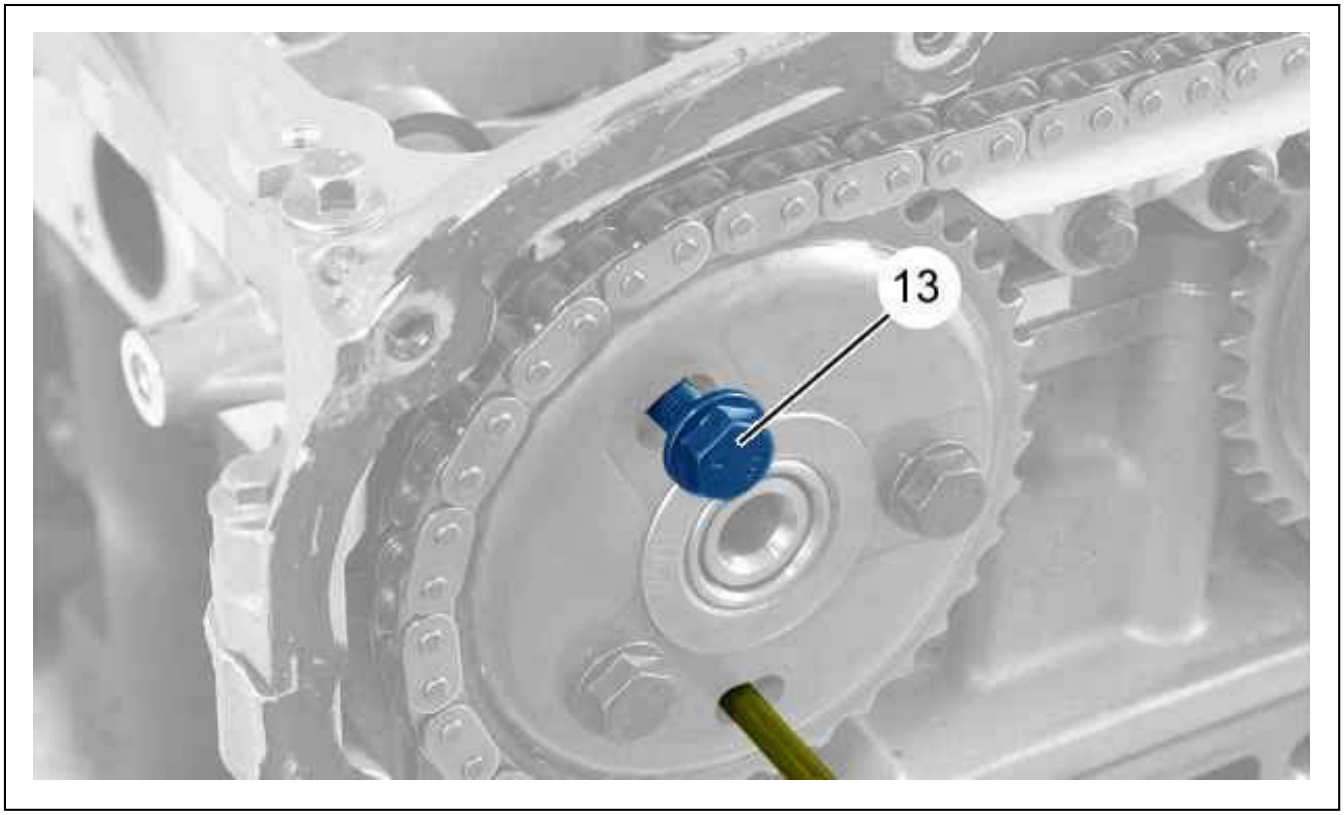

Figure : B1EG0YND

Slacken one of the screws (13).
Check that the screws (13) are not at the end of slots.
Tighten the bolts (13).
Remove :

- The tools [0198-B2]
- The tool [0198-N1]; [198-N2]; [198-N3]

Turn the crankshaft 4 turns in the normal direction of rotation ; Using the tools [0198-M1], [0198-M2], [0198-M3], [0198-M4], [0198-M5].
Check the pegging of the camshafts ; Using the tools [0198-B2].

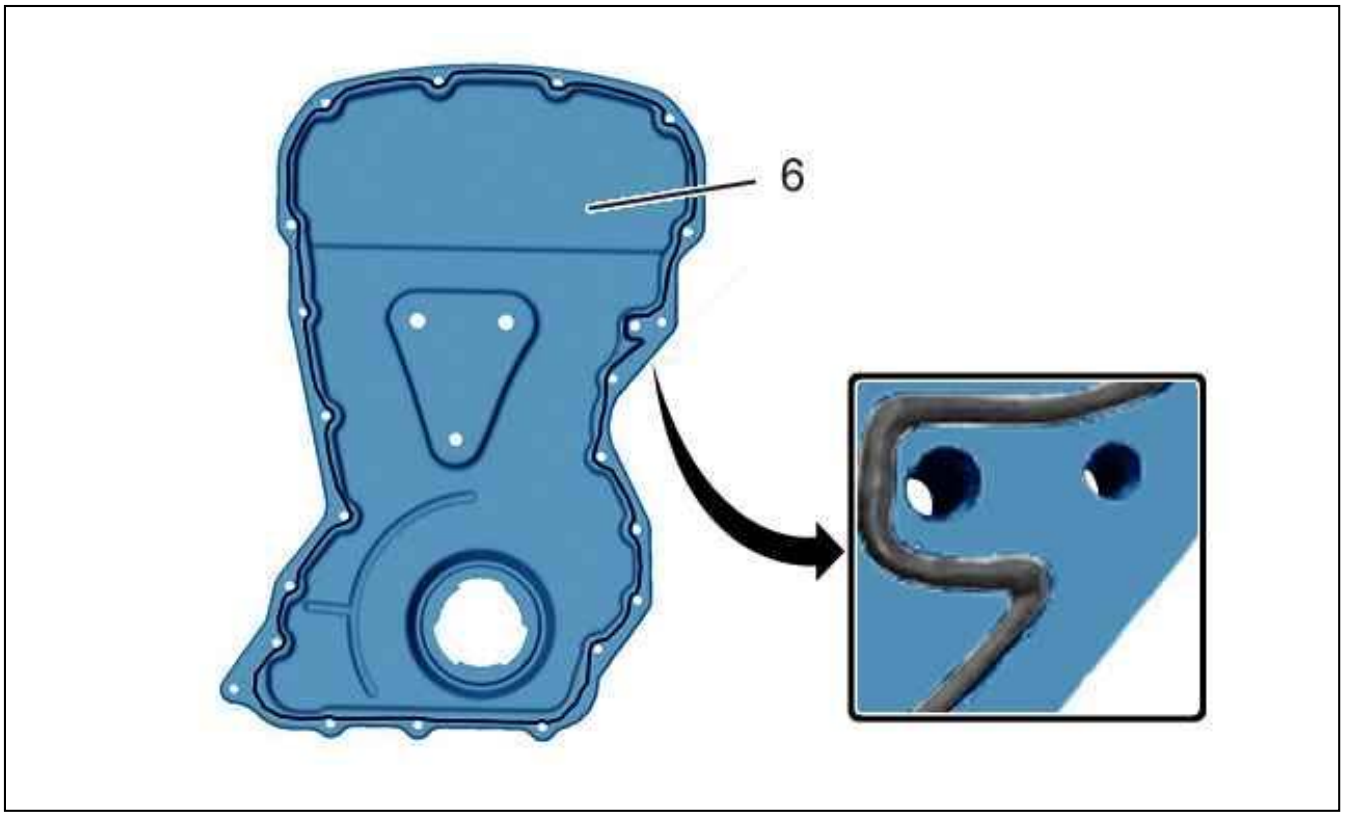

Figure : B1EG0YOD

CAUTION : Clean the gasket faces with an approved descaling product. Do not use abrasives or sharp tools on the joint faces. The seal faces should not show any traces of impacts or scratches.

CAUTION : Always replace : The oil sump (6).

CAUTION : Clean the bolt threads and taps before refitting.

Apply a bead of index "E10" sealant to the periphery of the timing cover (6).

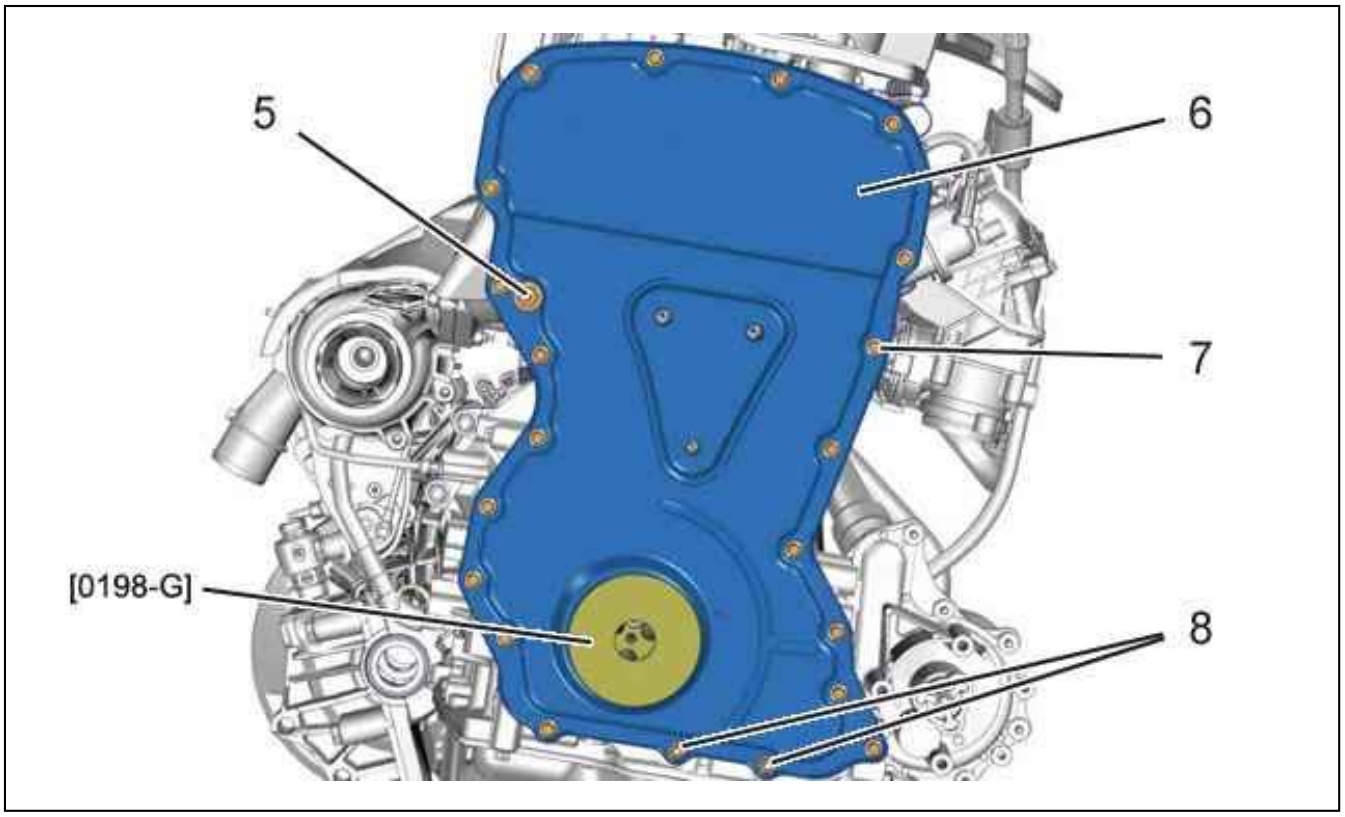

Figure : B1EG0YPD

Refit :

- The timing cover (6) (new)
- The 19 bolts (7) (without tightening)
- The 2 nuts (8) (without tightening)
- The pillar screw (5)

Centre the timing cover (6) ; Using tool [0198-G].
Tighten :

- The 19 bolts (7)
- The nuts (8)

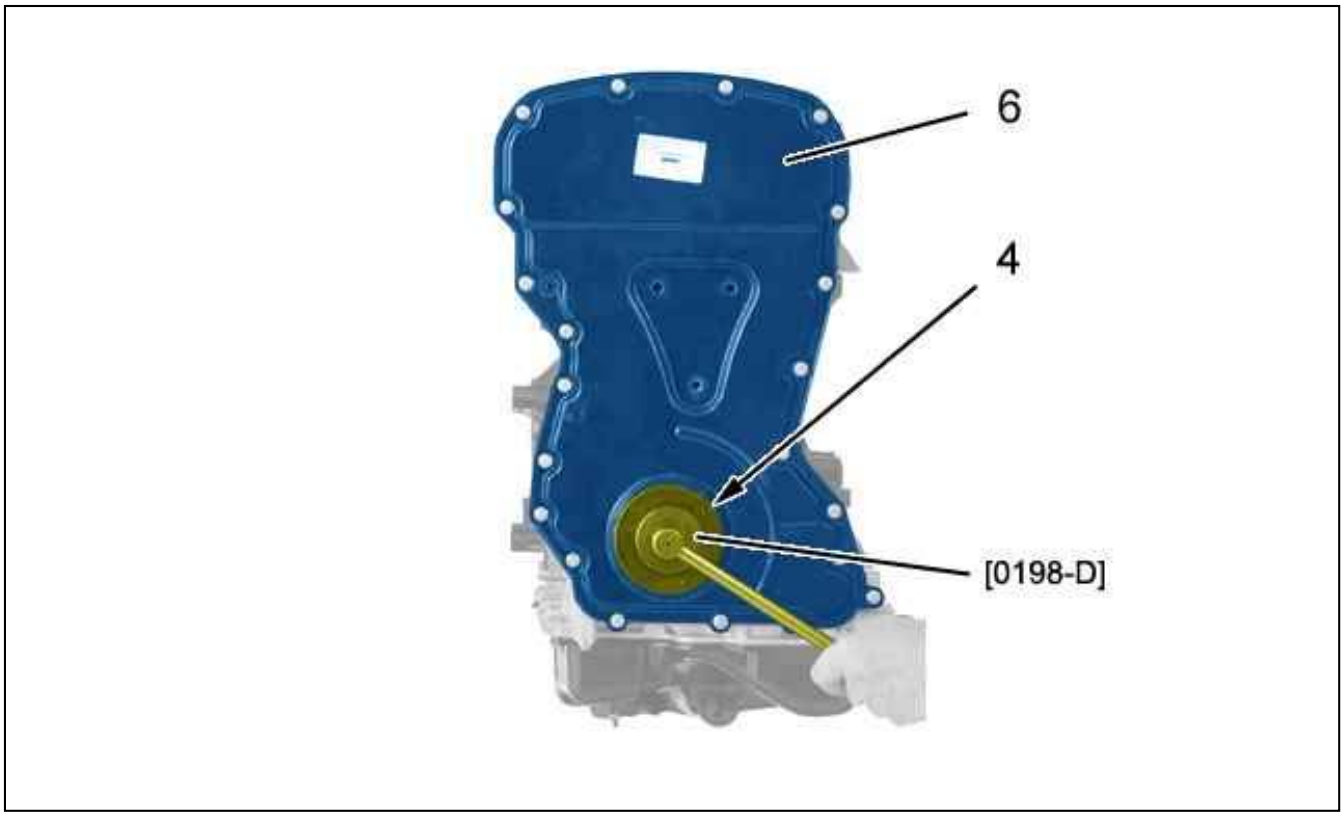

Figure : B1EG0YQD

Refit the ring seal (4) (Fitted with its fitting cone).
Engage the ring seal (4) in the timing cover (6).
Remove the fitting cone from the ring seal (4).
Turn through 1/4 of a turn clockwise to lock the ring seal (4) ; Using tool [0198-D].

CAUTION : Superimpose the upper engine mounting on the intermediate engine mounting, in order to line up the holes ; Using a workshop jack under the oil sump.

Refit :

- The intermediate engine mounting (2)
- The engine top mounting (3)

Remove the transverse engine support bar.
Refit :

- The power steering fluid reservoir and expansion bottle assembly (1)
- The air filter housing
- The alternator and air conditioning compressor drive belt guide rollers Check the electrical operation of the equipment
- The accessory belts (according to equipment)
- The headlamps
- The front right mud guard
- The protection plates under the engine (RH side)
- The front right wheel

Return the vehicle to its wheels.
Tighten the wheel bolts.

CAUTION : Perform the operations to be carried out following reconnection of the battery.

Reconnect the battery negative terminal.
Start the engine.

5. Checks

Road test the vehicle.
Clear the faults in the memory.

REMOVING - REFITTING : ENGINE OIL TEMPERATURE AND LEVEL SENSOR

ESSENTIAL : Observe the safety and cleanliness recommendations .

1. Tooling

tool	Reference	Designation
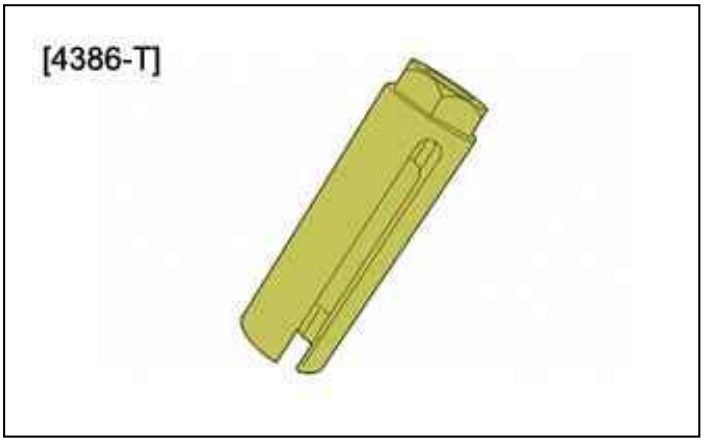 Figure : E5AB0DST	[4386-T]	Split sleeve (22 mm)

2. Location

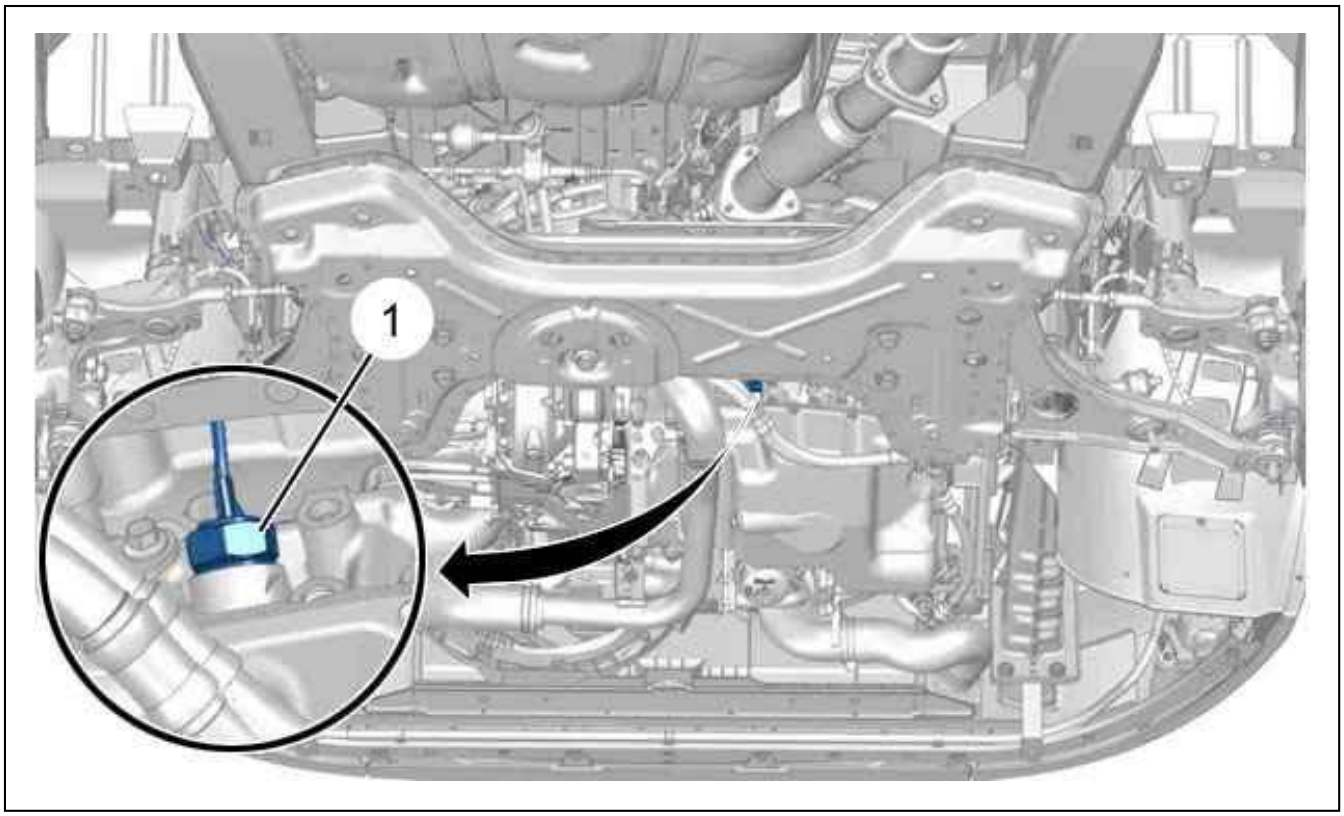

Figure : B1FG07VD

(1) Engine oil temperature and level sensor.

3. Removing

Disconnect the battery.
Lift and support the vehicle with the wheels free.
Remove the under engine protection .

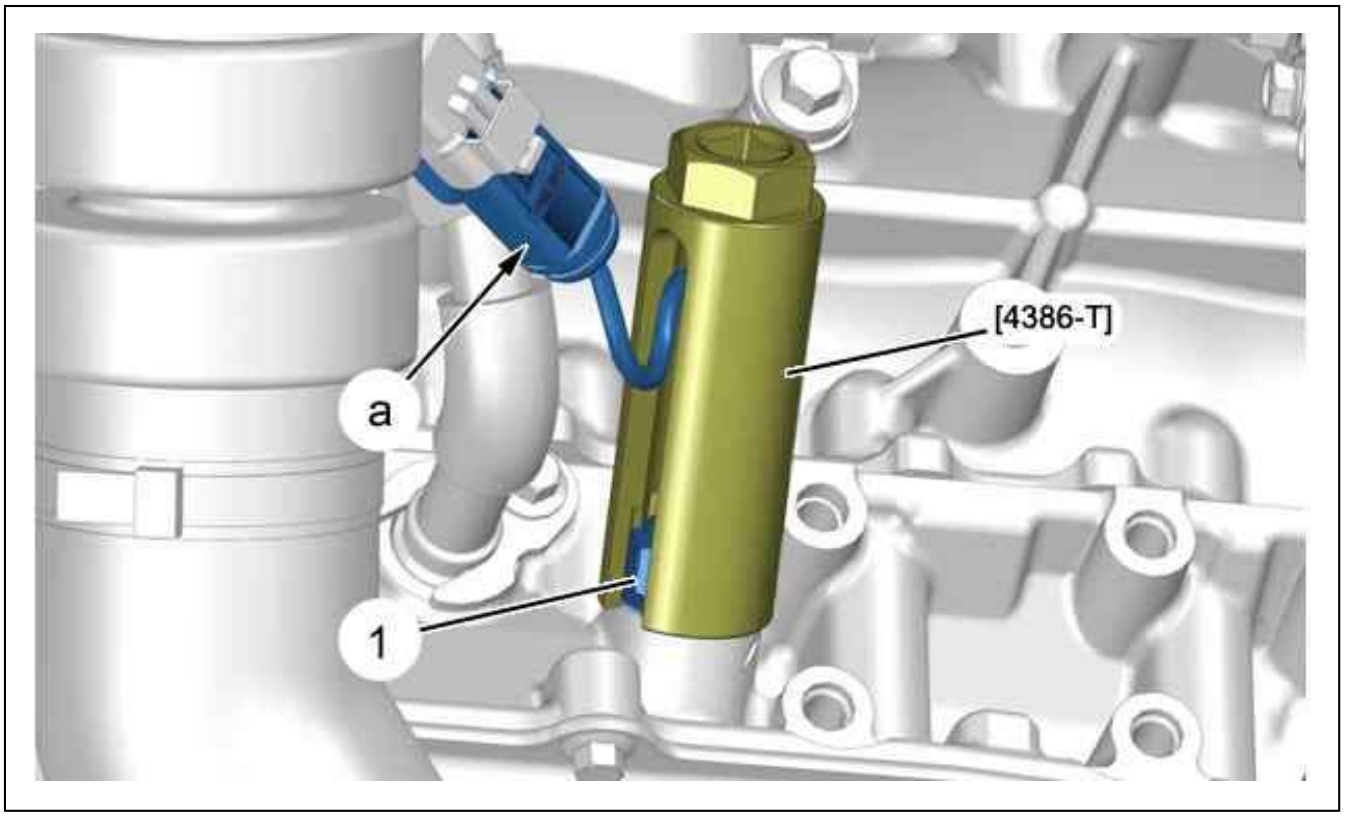

Figure : B1FG07WD

Disconnect the connector (as "a").
Remove : The engine oil level and temperature sensor (1) ; Using tool [4386-T].

N.B. : Expect oil to drain out.

4. Refitting

CAUTION : Adhere to the tightening torques .

Clean the thread of the engine oil level and temperature sensor (1).
Coat the thread of the engine oil level and temperature sensor (1) with threadlock.
Refit : The engine oil level and temperature sensor (1) (With a new seal); Using tool [4386-T].
Connect the connector (as "a").
Remove the under engine protection .
Top up the oil if necessary.

CAUTION : Perform the operations to be carried out following reconnection of the battery.

Reconnect the battery.
Start the engine.
Check the sealing of the engine oil level and temperature sensor (1).
Stop the engine.

REMOVING - REFITTING : OIL PRESSURE SENSOR

ESSENTIAL : Observe the safety and cleanliness recommendations .

1. Location

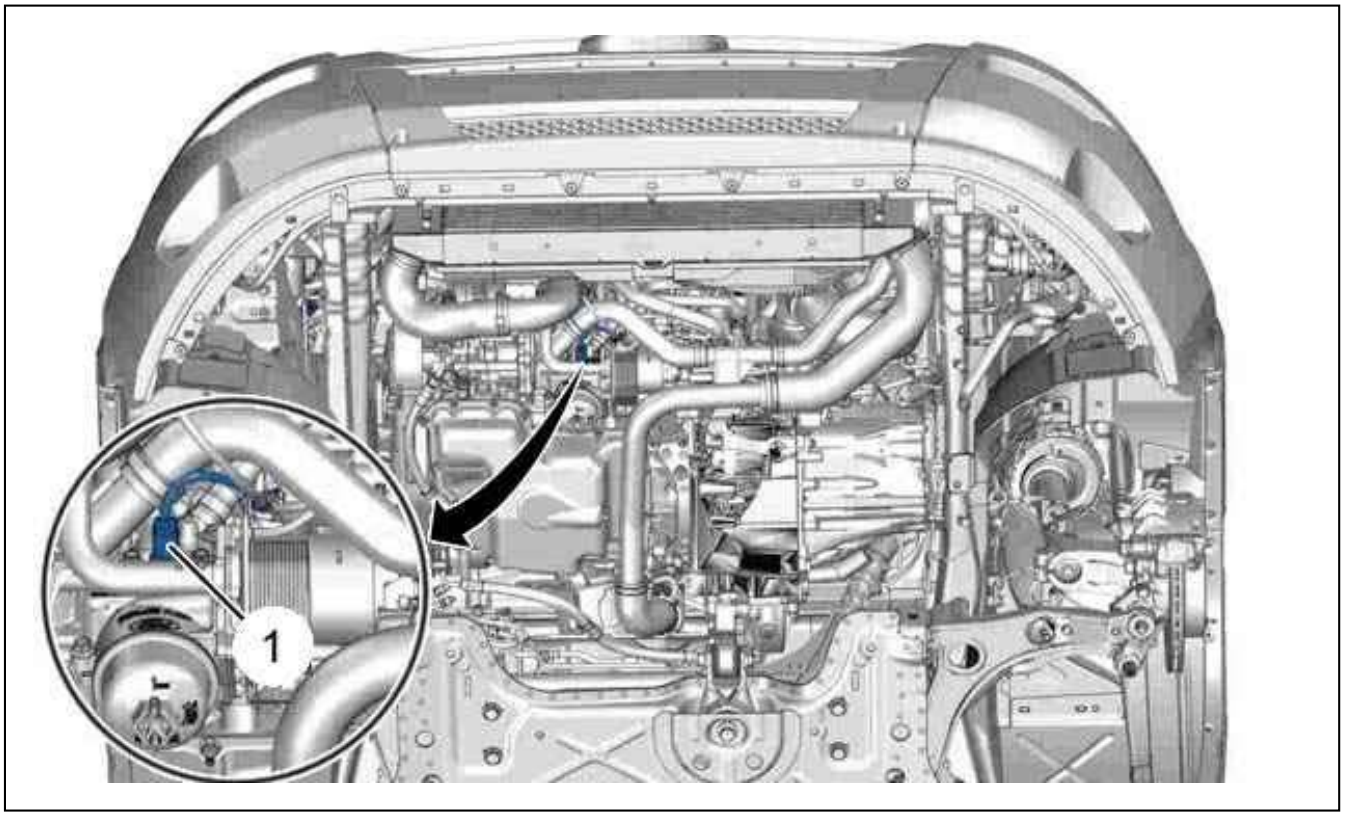

Figure : B1FG07RD

(1) Oil pressure sensor.

2. Removing

Place the vehicle on a 2-post lift.
Disconnect the battery.
Remove the under engine protection .

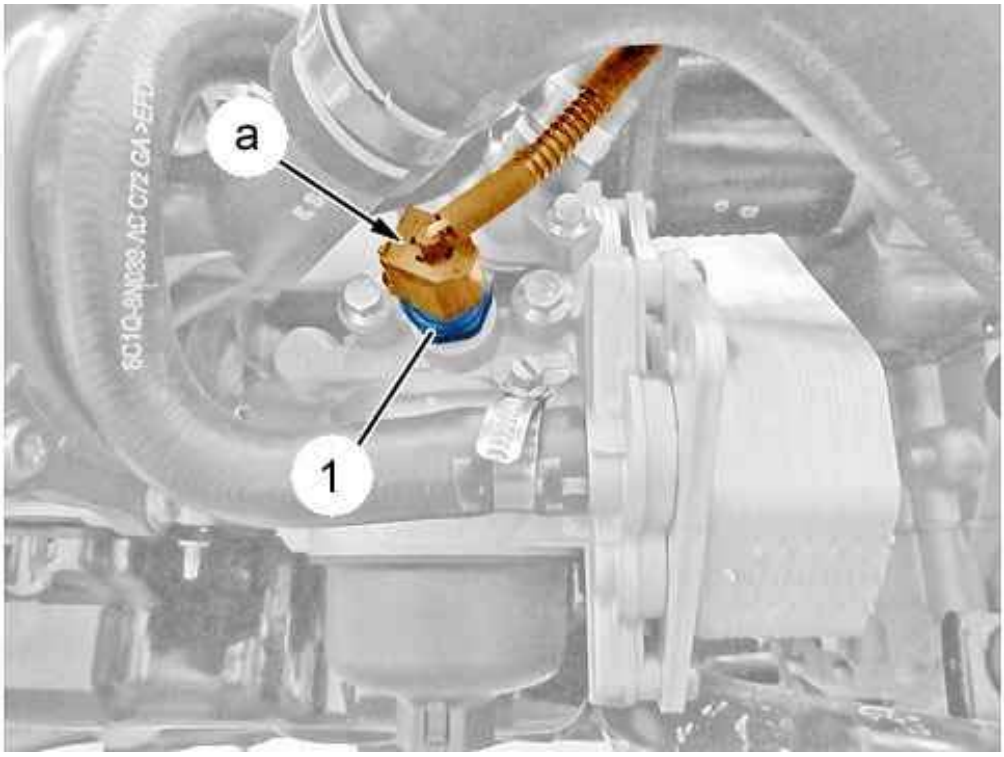

Figure : B1FG07SD

Disconnect the connector (as "a").

CAUTION : Protect the surrounding area using a cloth on removal to absorb the oil which flows out of the opening.

Remove the oil pressure sensor (1).

3. Refitting

CAUTION : Adhere to the tightening torques .

Refit the oil pressure sensor (1) (equipped with a new seal).
Reconnect the connector (as "a").
Refit the under-engine protection .

CAUTION : Check the engine oil level using the manual dipstick and top up if necessary.

CAUTION : Perform the operations to be carried out following reconnection of the battery.

Reconnect the battery.

REMOVING - REFITTING : OIL PUMP

ESSENTIAL : Observe the safety and cleanliness recommendations .

1. Tooling

Equipment :

- Dial gauge magnetic support
- dial gauge

Tool	Reference	Designation
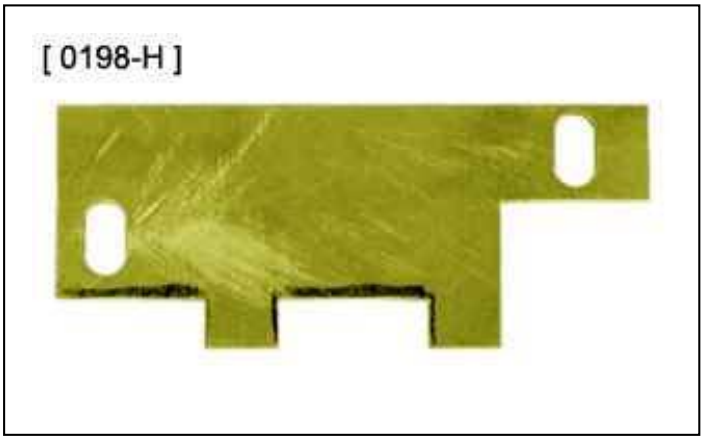 Figure : E5AB16KT	[0198-H]	Oil pump positioning gauge
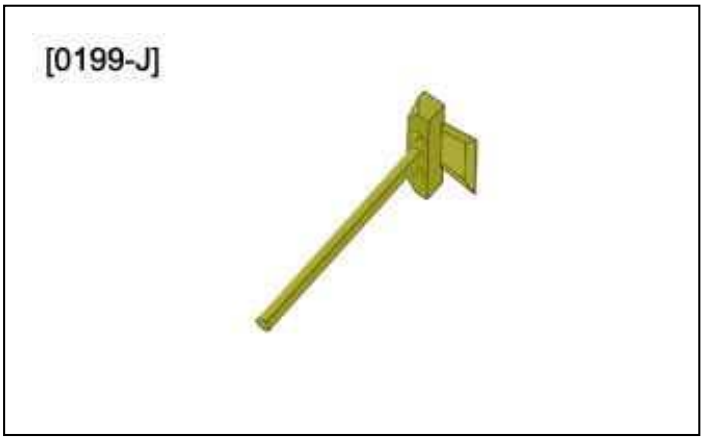 Figure : E5AB0QZT	[0199-J]	Cutting chisel

2. Removing

2.1. Preliminary operations

Put the vehicle on a hoist.
Disconnect the battery.
Remove the engine style cover (according to equipment).

Remove the protectors under the engine.
Drain the cylinder block.
Remove timing belt cover ; Using tool [0199-J].

2.2. Oil sump

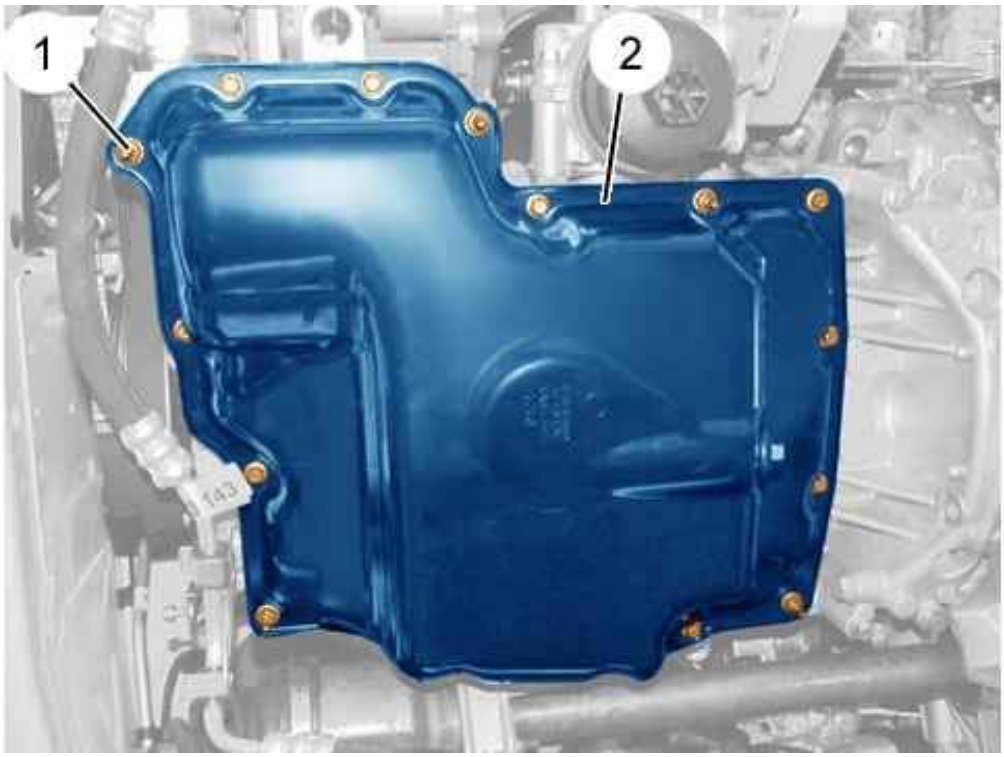

Figure : B1FG089D

Remove the 17 mountings (1).
Detach : The oil sump (2) ; Using tool [0199-J].
Remove : The oil sump (2).

2.3. Oil pump

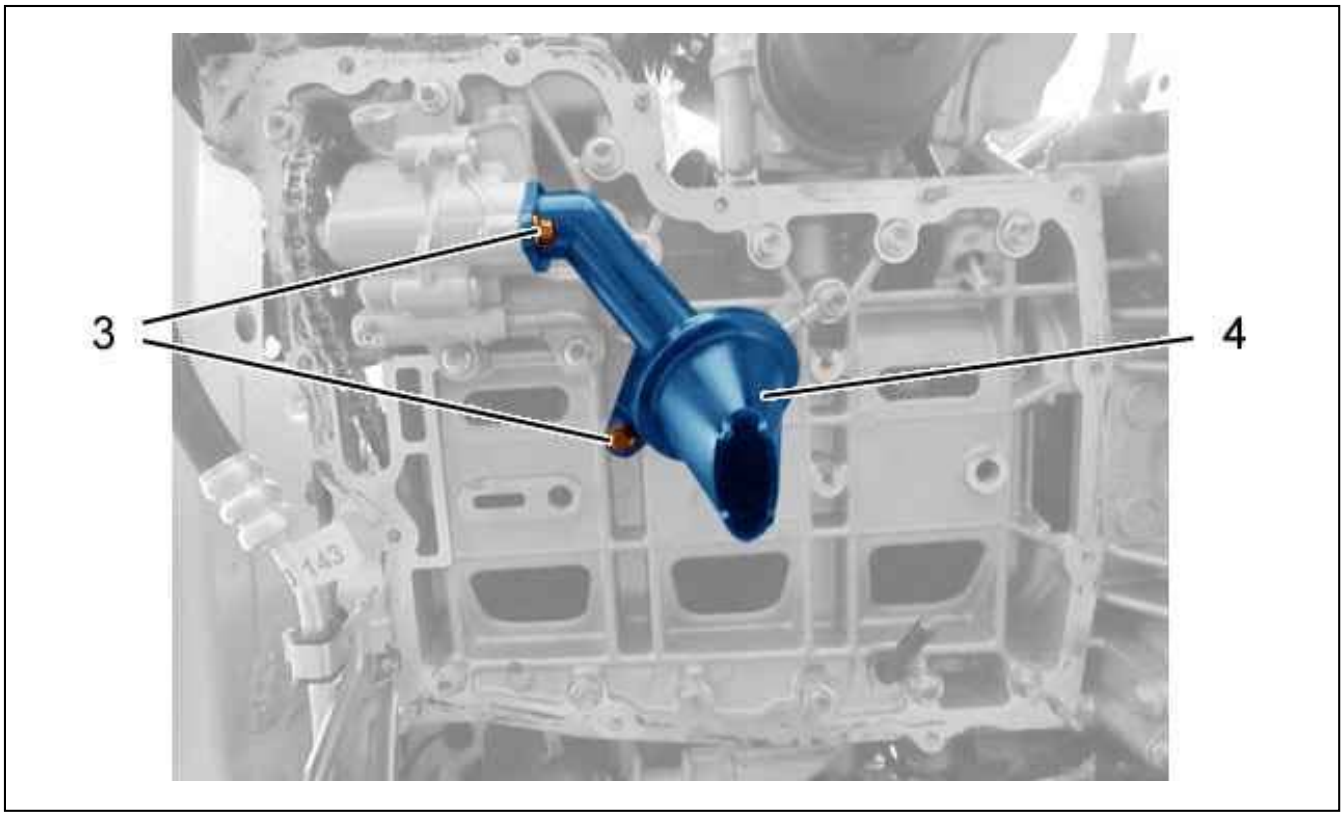

Figure : B1FG08AD

Remove :

- The 2 bolts (3)
- The oil pump strainer (4)

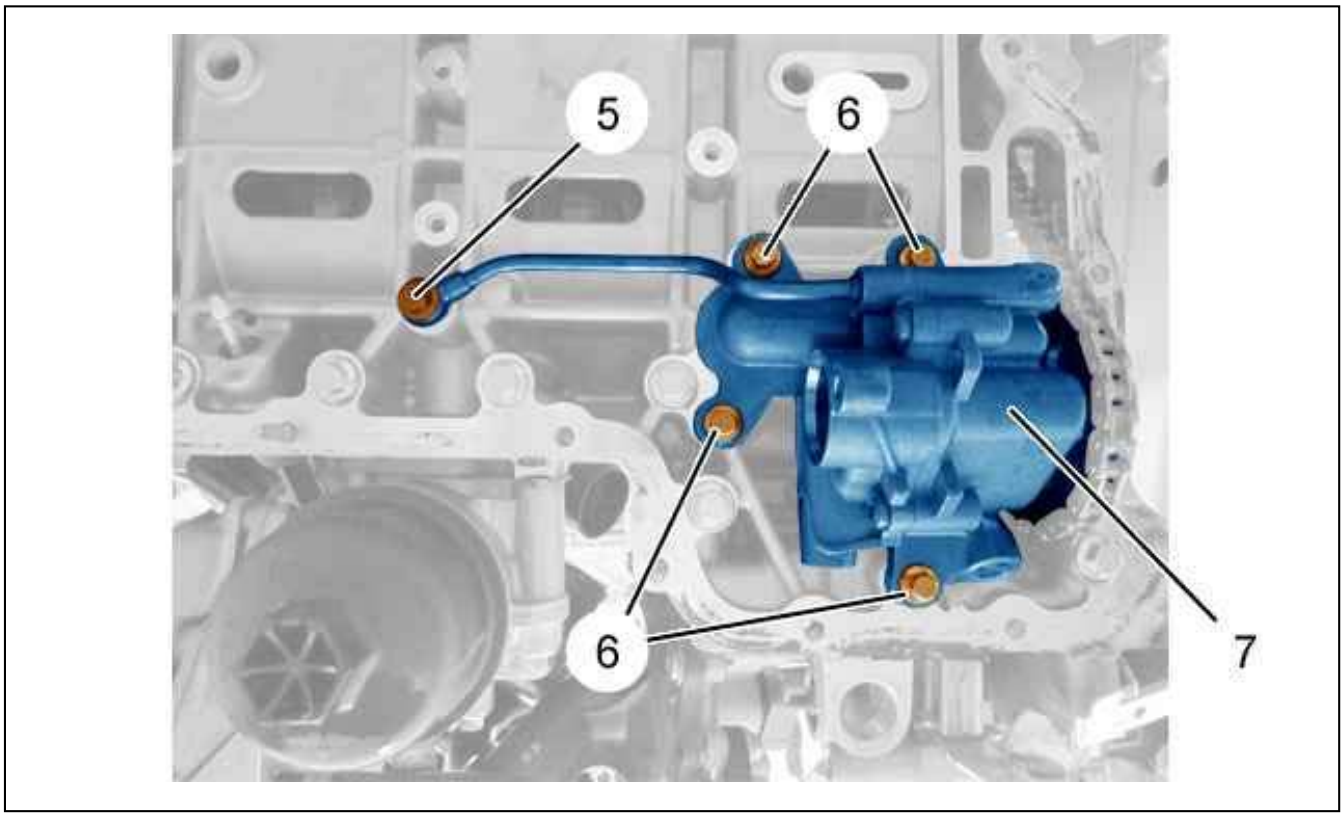

Figure : B1FG08BD

Remove :

- The (5) bolt
- The 4 oil pump (7) bolts (6)

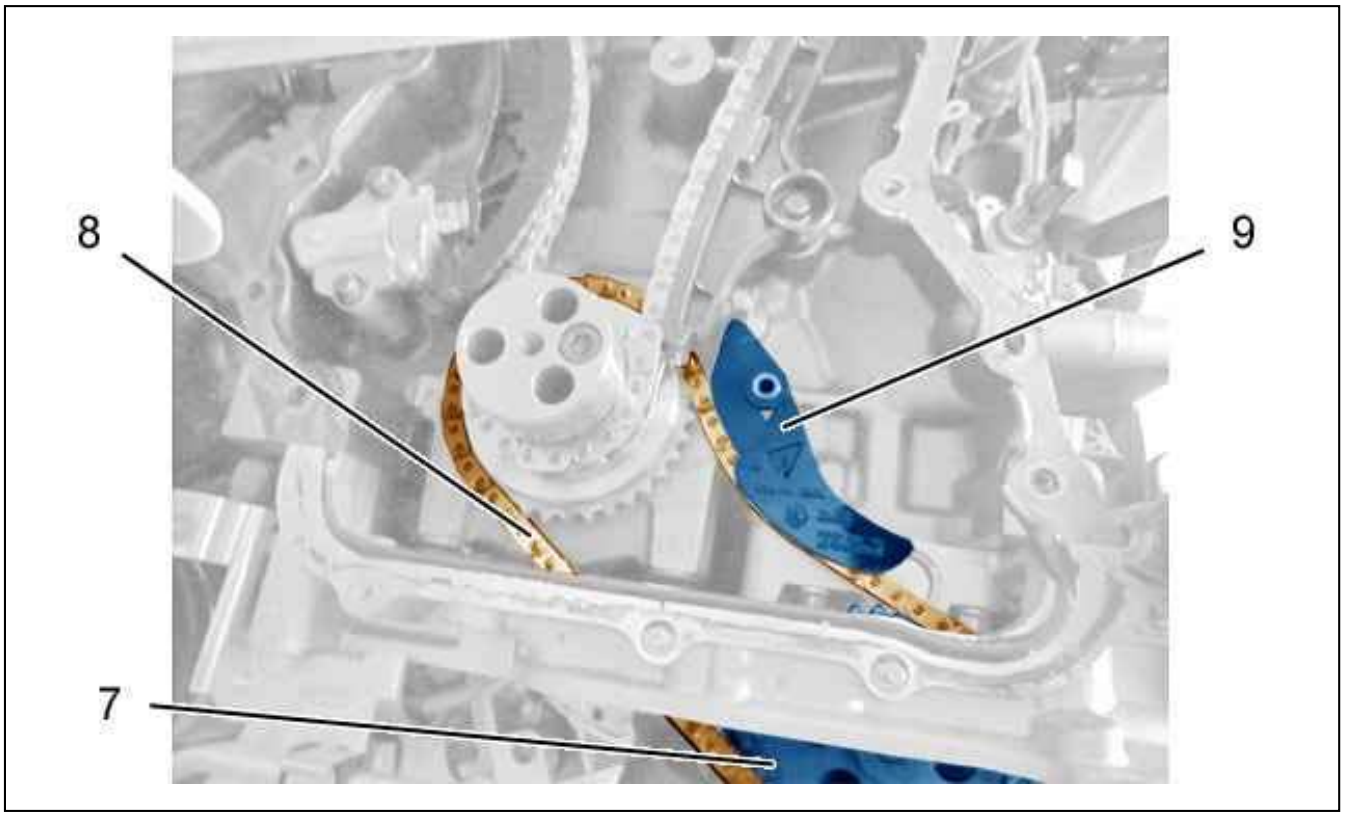

Figure : B1FG08CD

Pivot the oil pump chain (8) guide (9).
Move aside and remove the oil pump (7) from the oil pump chain (8).

3. Refitting

CAUTION : Adhere to the tightening torques .

CAUTION : Clean the gasket faces with an approved descaling product. Do not use a cutting or abrasive tool. The gasket faces must not have any traces of knocks or scores.

3.1. Oil pump

Refit :

- The oil pump (7) on the oil pump chain (8)
- The oil pump (7) in its location

Check that the oil pump chain (8) guide (9) is positioned correctly.
Refit the 4 bolts (6).

3.2. Oil pump alignment (Reused oil pump and sump)

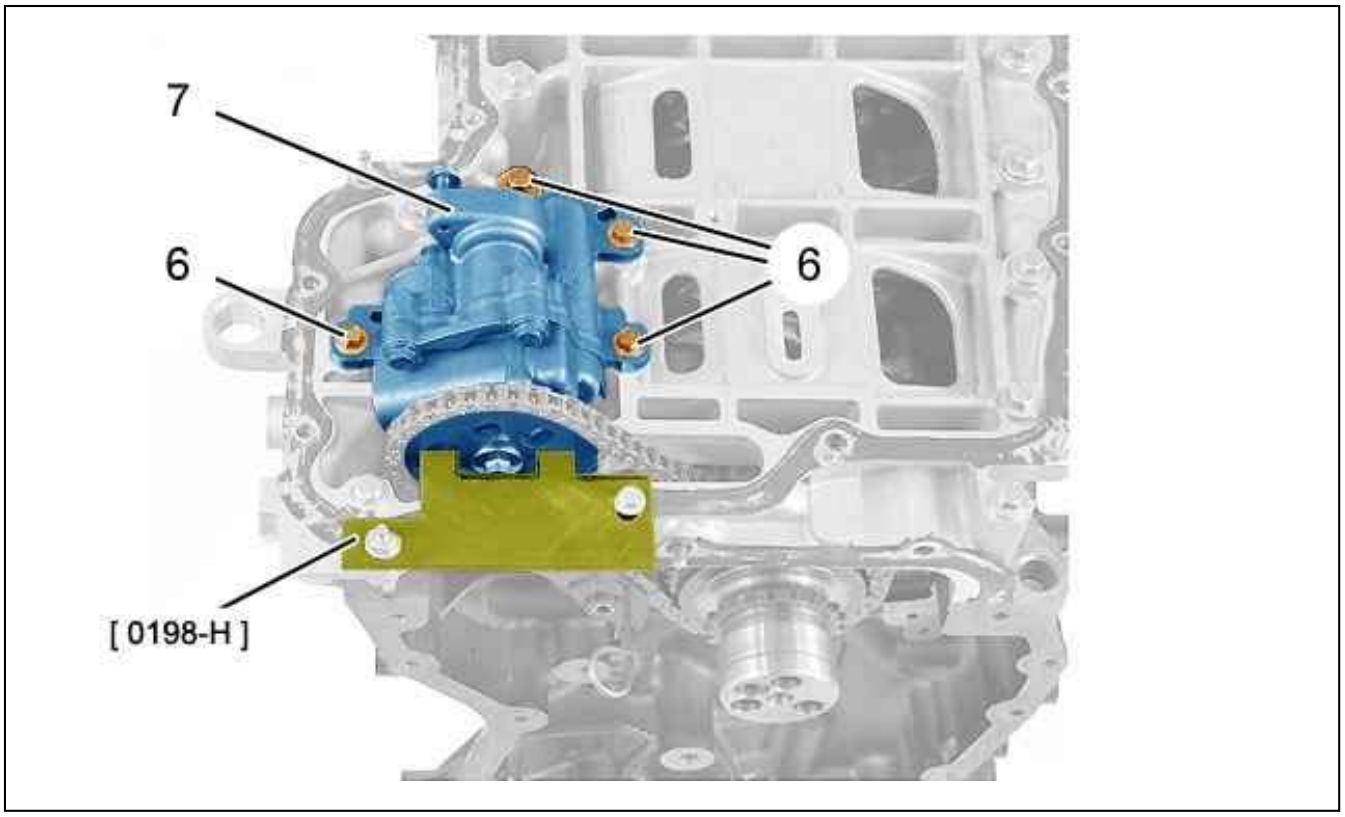

Figure : B1FG08DD

Align the oil pump (7) on the positioning gauge [0198-H] previously fitted on removal of the oil pump.
Tighten the bolts (6).
Remove the tool [0198-H].

3.3. Oil pump alignment (New oil pump or new sump)

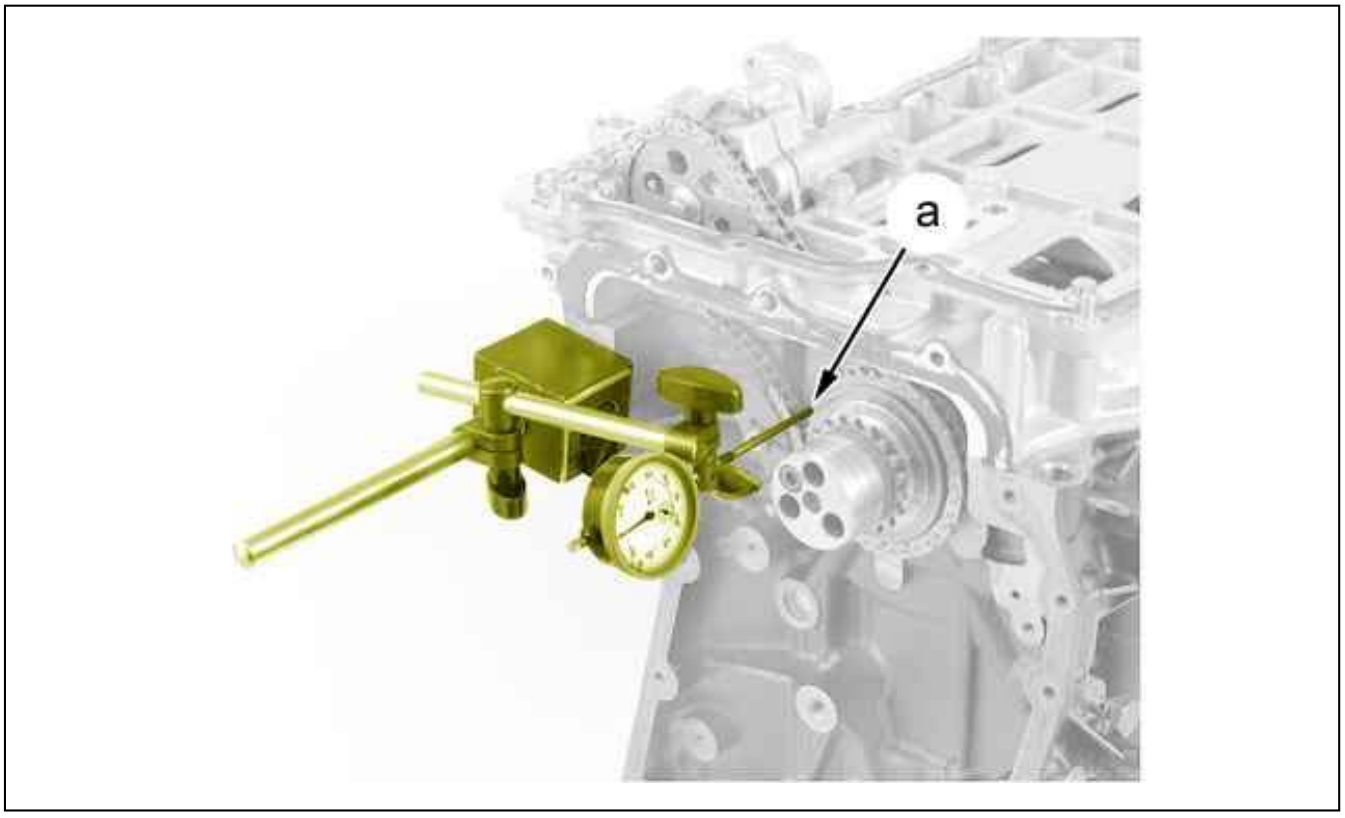

Figure : B1FG08FD

Place the magnetic support on the cylinder block.
Fix the dial gauge on the magnetic support .
Position the tip of the dial gauge (at "a").
Read value "A" on the dial gauge .

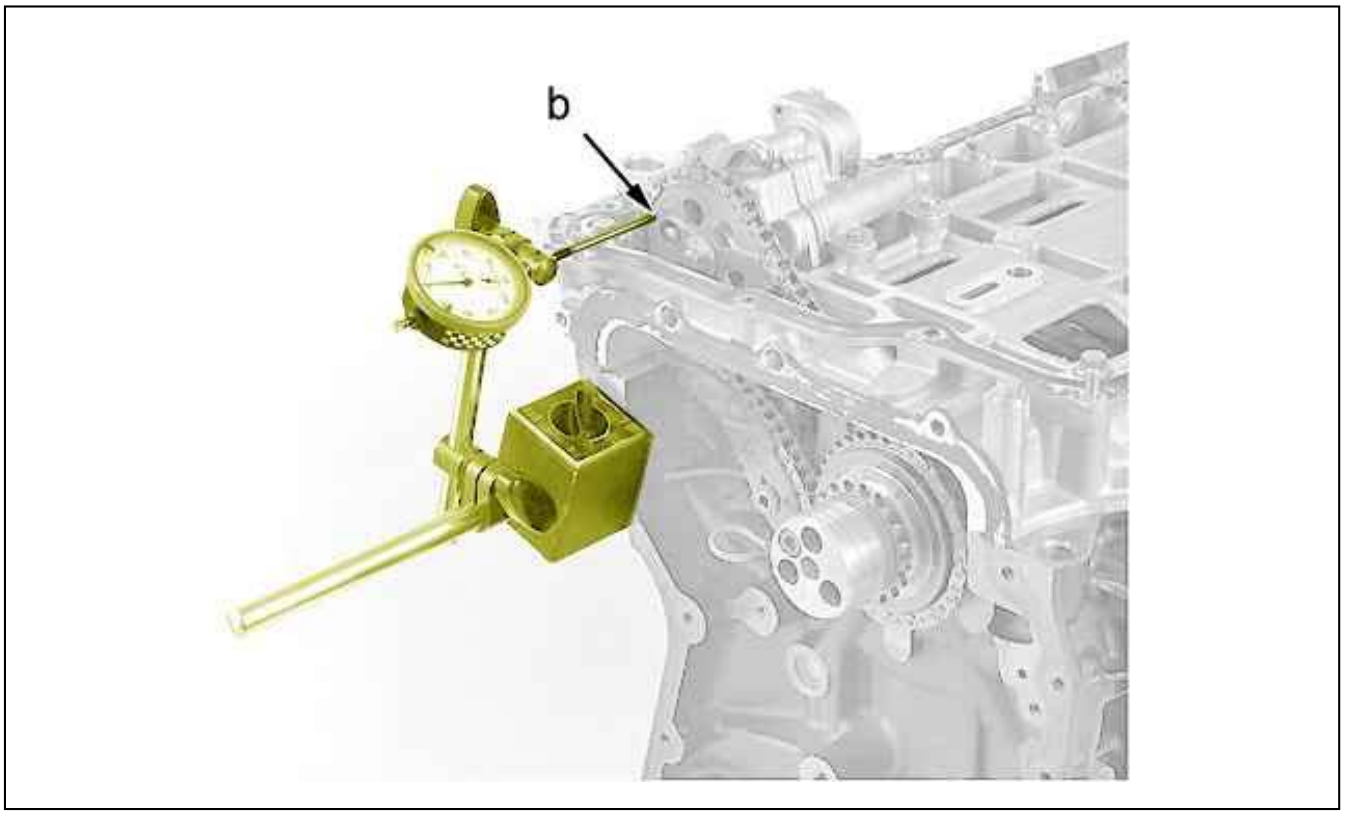

Figure : B1FG08GD

CAUTION : If the value is outside the tolerance, start the alignment of the oil pump again.

Tilt the magnetic support and the dial gauge.
Position the tip of the dial gauge on the oil pump pinion (at "b").
Move the oil pump closer or further away to obtain the value "A" ± 0,05 mm.
Slightly tighten the bolts (6).

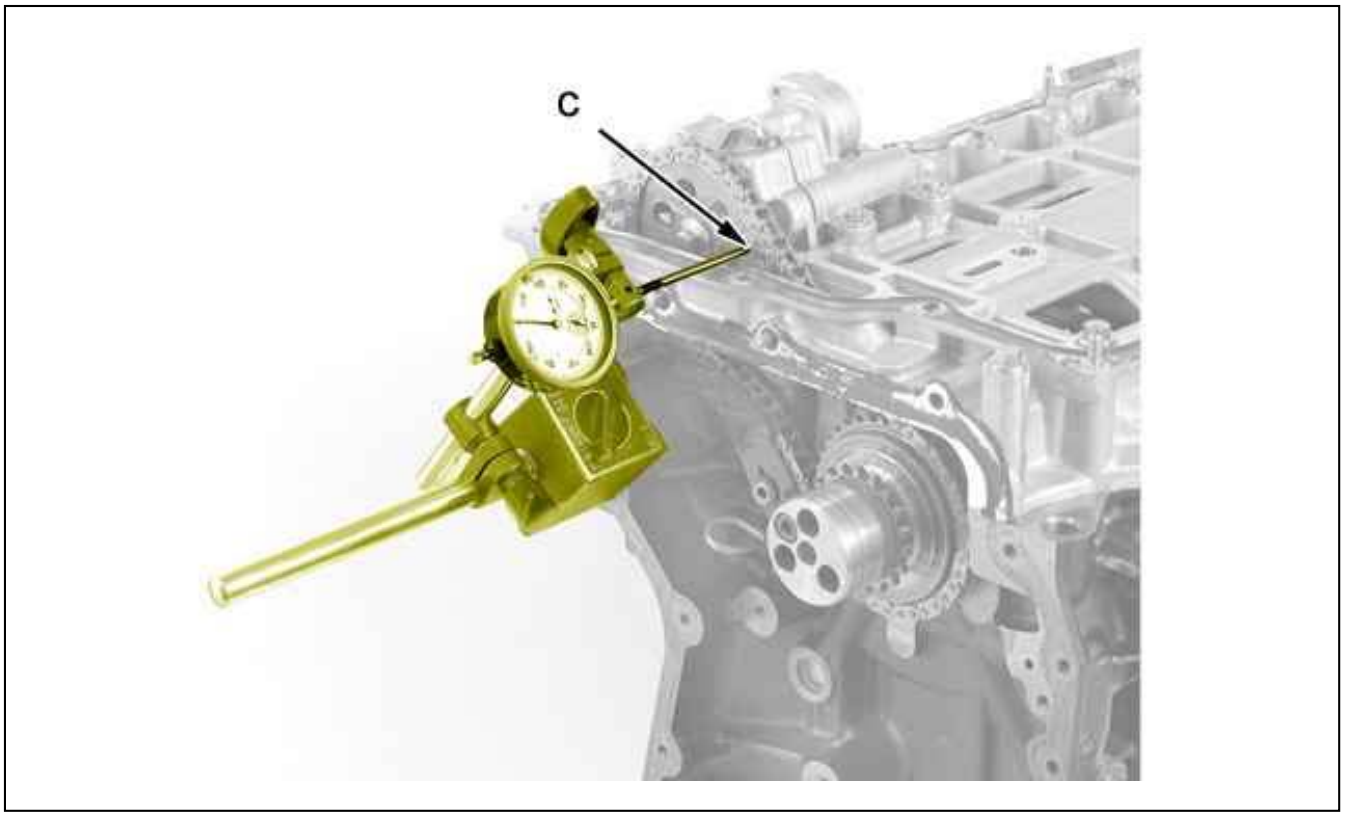

Figure : B1FG08HD

CAUTION : If the value is outside the tolerance, start the alignment of the oil pump again.

Tilt the magnetic support and the dial gauge.
Position the tip of the dial gauge (at "c") diametrically opposite the measuring point "b".
Read value "" on the dial gauge .
If the value read does not correspond to the value "A" ± 0,05 mm, move the oil pump to obtain this value.
Check the value "A" ± 0,05 mm on the previous checking point.
Tighten the bolts (6).
Remove the magnetic support and the dial gauge.
Refit :

- The bolt (5)
- The oil pump strainer (4)
- The 2 bolts (3)

3.4. Oil sump



Figure : B1FG08ID

N.B. : Apply a bead of index "E10" silicon type sealing paste to the oil sump (2) (at "d").

Refit :

- The oil sump (2)
- The mountings (1)
- The timing cover

Fill with oil.

CAUTION : Perform the operations to be carried out following reconnection of the battery.

Reconnect the battery.

3.5. Precautions to be taken before starting the vehicle

CAUTION : Do not start the vehicle without having carried out the following operations.

Disconnect the camshaft position sensor connector.
Turn the engine over with the starter motor for 15 seconds.
Connect : The camshaft position sensor connector.
Let the engine run at idle for 30 seconds before increasing the load.

N.B. : After the engine has been run, check the sealing of the components that were removed.

Clear the faults in the memory ; Using a diagnostic tool. .

3.6. Checking

Verify - Top up the engine oil level (if necessary). .
Start the engine. .

Check there are no oil leaks. .
Stop the engine.
Refit :

- The protective panel under the engine
- The engine style cover (according to equipment)
- The vehicle to its wheels

REMOVING - REFITTING : COOLANT TEMPERATURE SENSOR

ESSENTIAL : Observe the safety and cleanliness recommendations .

1. Removing

Disconnect the battery.
Drain the cooling system.

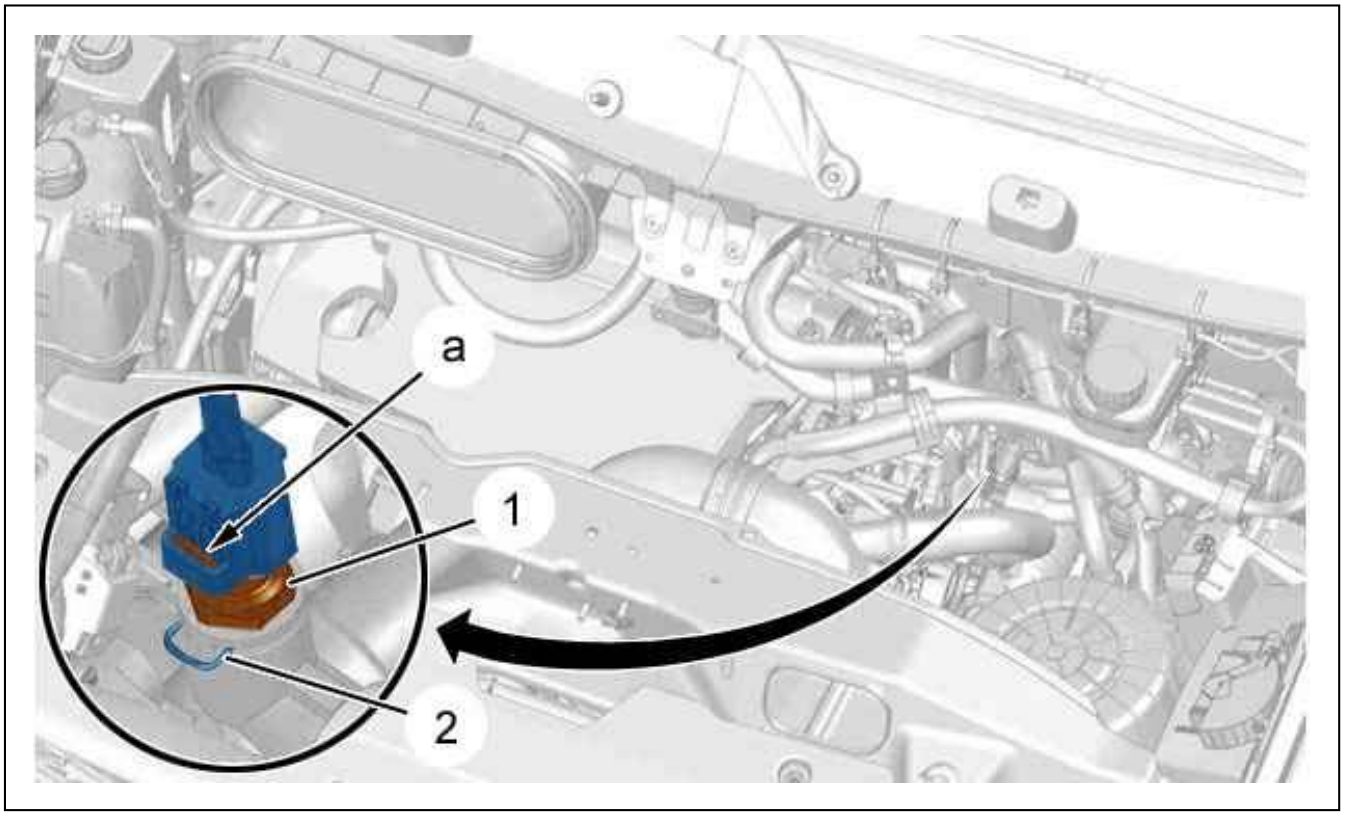

Figure : B1GG10VD

Disconnect the connector (as "a").
Remove the clip (2).
Remove the coolant temperature sensor (1).

2. Refitting

Refit the coolant temperature sensor (1) (equipped with a new seal).
Refit the clip (2).
Reconnect the connector (as "a").
Fill and bleed the cooling system.

CAUTION : Perform the operations to be carried out following reconnection of the battery.

Reconnect the battery.

REMOVING - REFITTING : ENGINE COOLING RADIATOR

ESSENTIAL : Observe the safety and cleanliness recommendations.

1. Tooling

Equipment : Drain tray.

tool	Reference	Designation
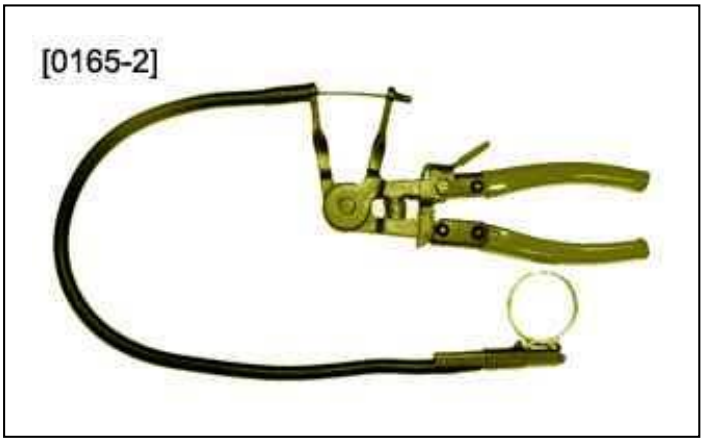 Figure : E5AI007T	[0165-2]	Cable pliers for flexible clips
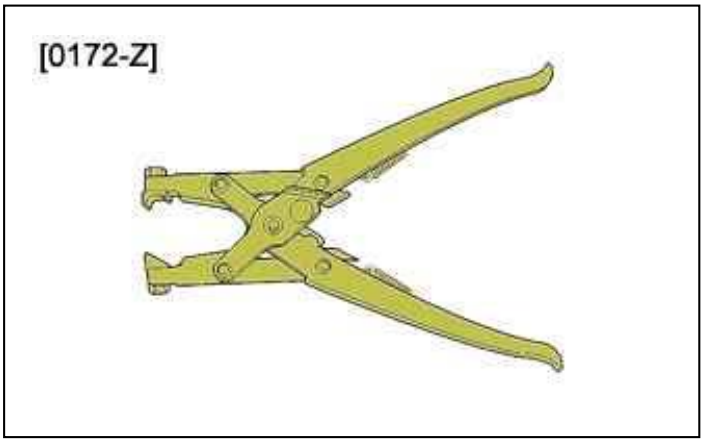 Figure : E5AI00DT	[0172-Z]	Pliers for removal/refitting Clic clips

2. Removing

Disconnect the battery negative terminal.
Drain the engine cooling circuit.
Remove :

- The upper central bumper
- The lower central bumper
- The protection plates under the engine

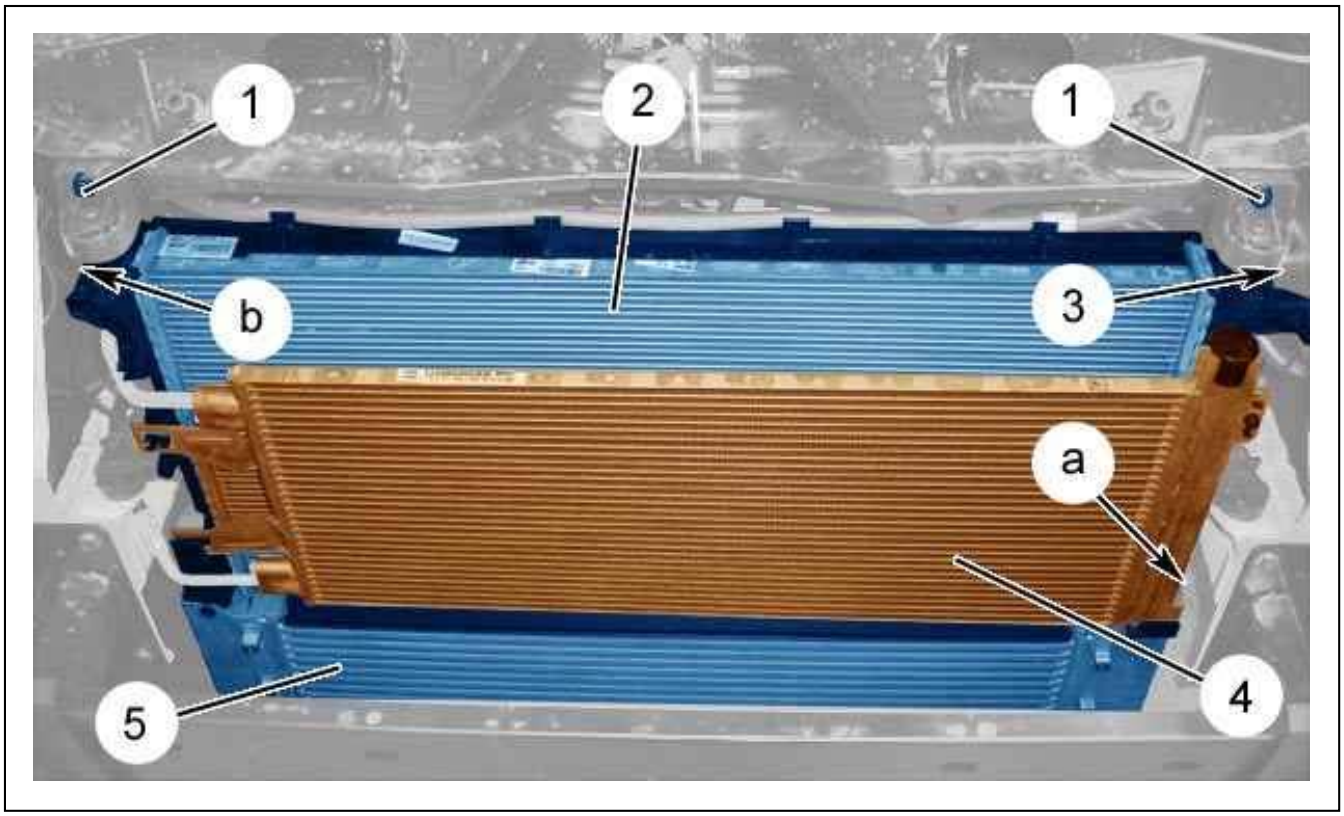

Figure : B1GP0EYD

Remove :

- The turbocharging air cooler (5)
- The pipe (3) ; Using tool [0172-Z]
- The upper and lower hoses of the cooling radiator (at "a", "b") ; Using tool [0165-2]

Unclip and move aside the air conditioning condenser (4).
Move aside the ventilation cassette.
Remove :

- The 2 bolts (1)
- The engine cooling radiator (2)

3. Refitting

Refit :

- The engine cooling radiator (2)
- The 2 bolts (1)

Reposition : The ventilation cassette.
Reclip the air conditioning condenser (4).
Refit :

- The upper and lower hoses of the cooling radiator (at "a", "b") ; Using tool [0165-2]
- The pipe (3) ; Using tool [0172-Z]
- The turbocharging air cooler (5)

CAUTION : Perform the operations to be carried out following reconnection of the battery.

Reconnect the battery.
Fill and bleed the engine cooling circuit.

Start the engine.
Check that there are no leaks.
Stop the engine.
Refit :

- The protection plates under the engine
- The lower central bumper
- The upper central bumper

REMOVING - REFITTING : COOLANT PUMP

ESSENTIAL : Observe the safety and cleanliness recommendations .

1. Tooling

tool	Reference	Designation
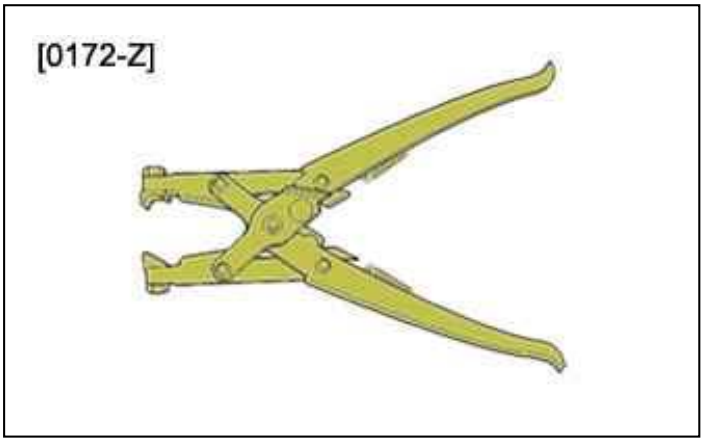 Figure : E5AB0PPT	[0172-Z]	Pliers for spring collar

2. Removing

Disconnect the battery negative terminal.
Chock and lift the vehicle on a 2 column lift.
Remove :

- The protective panel under the engine
- The right-hand protector under the engine

Drain the cooling system.

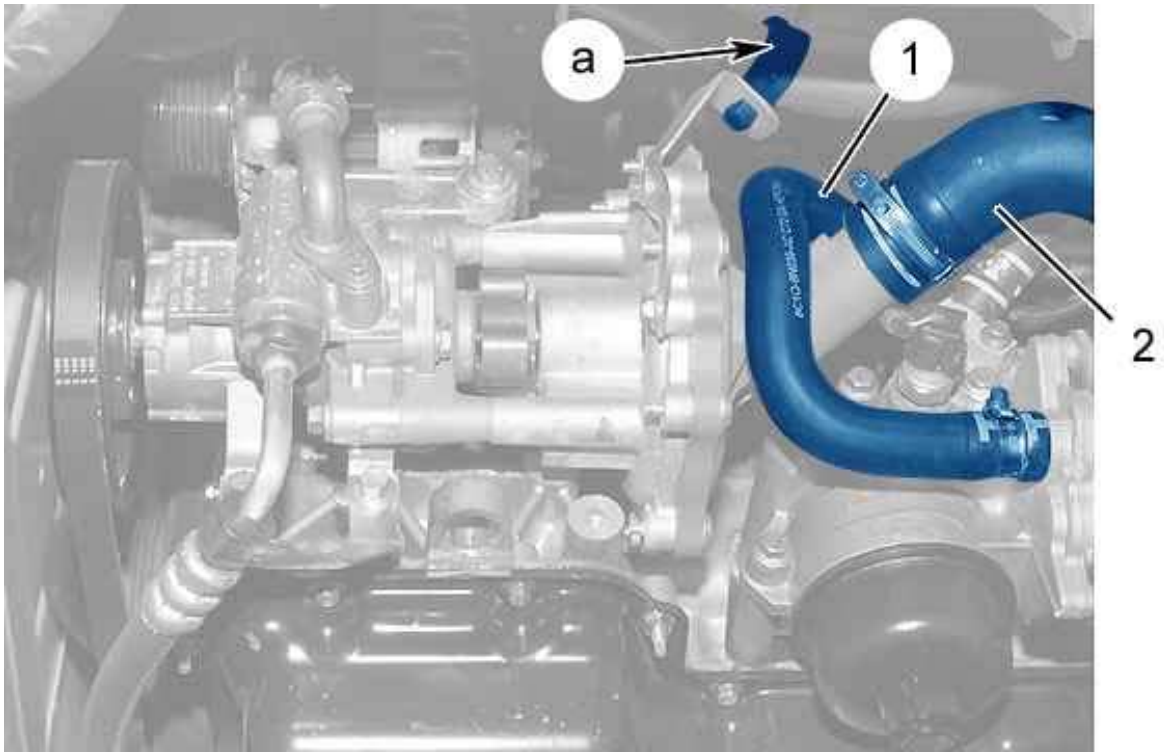

Figure : B1BPRWUD

Remove :

- The auxiliary equipment drive belt (according to equipment)
- The hoses (1) and (2) ; Using tool [0172-Z]

Unclip the pipe (at "a").

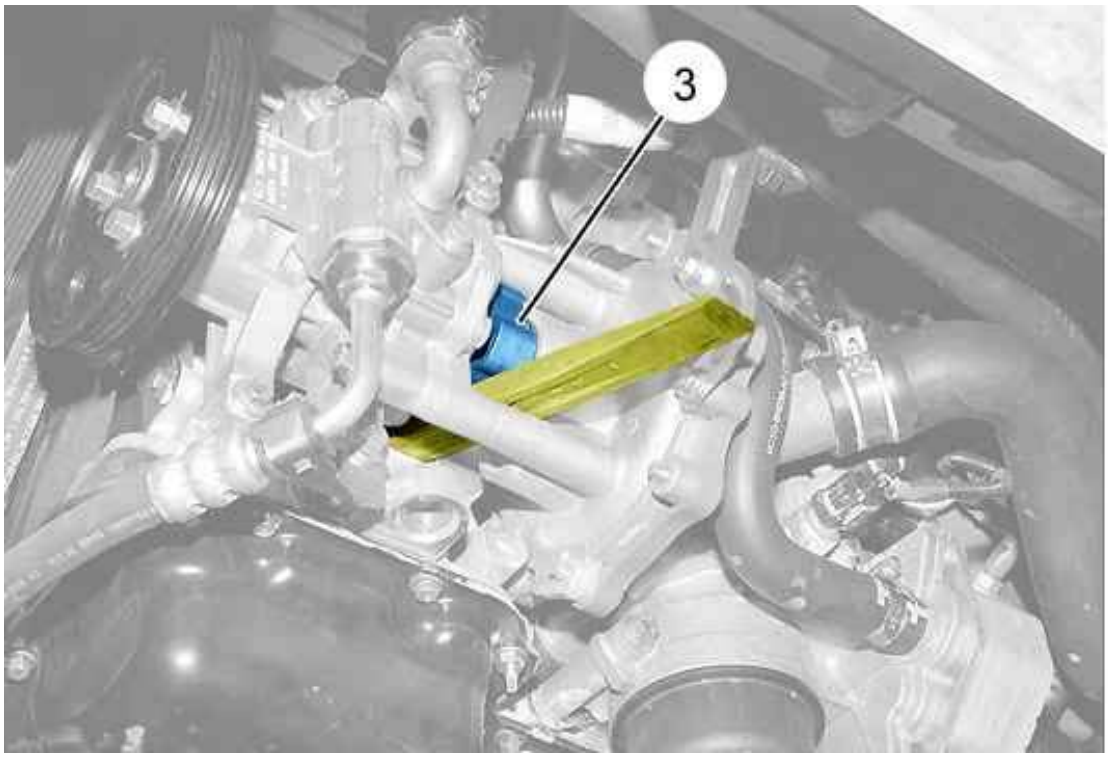

Figure : B1BPRWVD

Block rotation of the coupling (3) ; Using a bodywork chisel.

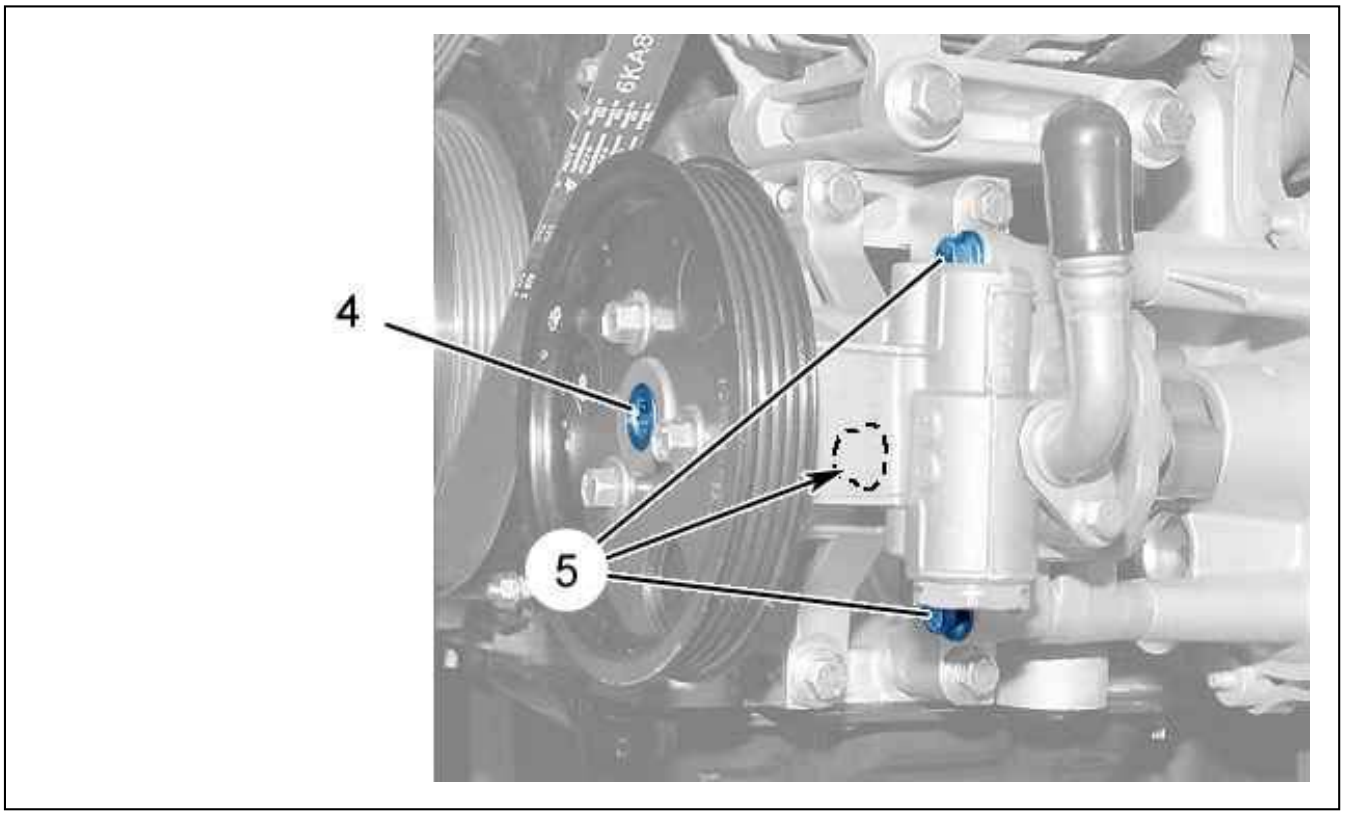

Figure : B1BPRWWD

Uncouple the coupling (3) by turning the power steering pump shaft (4) anti-clockwise.
Remove the bolts (5).

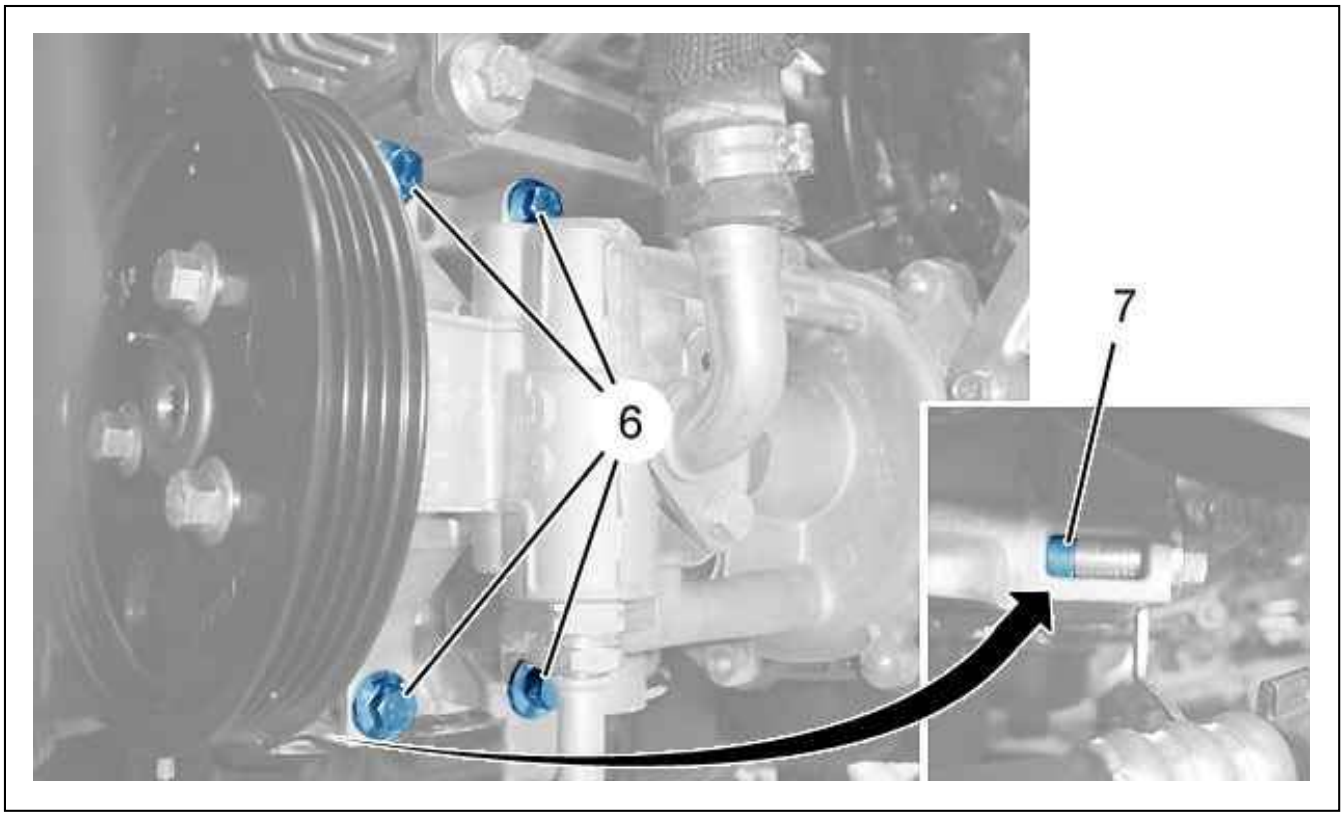

Figure : B1BPRWXD

Remove the bolts (6).
Remove the chisel.
Move the power steering pump and the centring device (7) away from the engine.
Remove the coolant pump .

3. Refitting

CAUTION : Adhere to the tightening torques .

Refit the coolant pump using a new seal.
Position the coolant pump on the power steering pump .
Couple the coupling (3) by turning the power steering pump shaft (4) clockwise.
Refit the bolts (5).
Position the power steering pump and the centring device (7) on the engine.
Refit the bolts (6).
Block rotation of the coupling (3).
Tighten the coupling (3) by turning the power steering pump shaft (4) clockwise.
Reclip the pipe (at "a").
Refit :

- The hoses (1) and (2)
- The auxiliary equipment drive belt (according to equipment)
- The right-hand protector under the engine
- The protective panel under the engine

CAUTION : Perform the operations to be carried out following reconnection of the battery.

Reconnect the battery negative terminal.

Fill and bleed the cooling system.

DRAIN AND REFILL - REFILLING - BLEEDING : COOLING SYSTEM

ESSENTIAL : Observe the safety and cleanliness recommendations .

CAUTION : Refer to the vehicle's servicing schedule for the coolant checking interval.

Check the pH of the coolant ; Using reactive strips.

N.B. : The pH value of the coolant should be between 7 and 8.

Replace the coolant if the pH value is out of tolerance.

1. Tooling

Tool	Reference	Designation
 Figure : E5AB1CNT	[01102]	Tool for filling the cooling system by vacuum
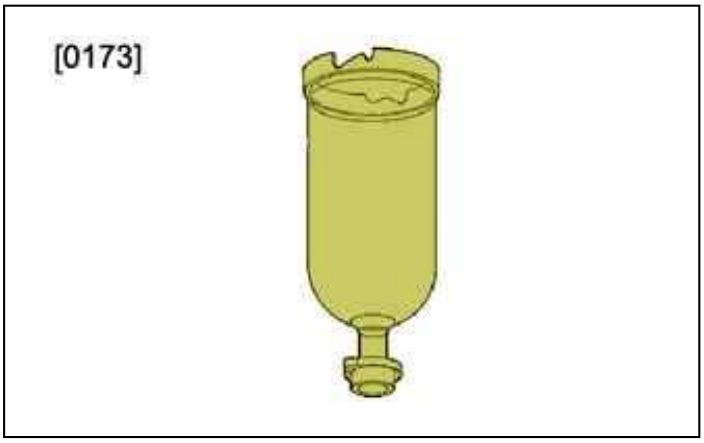 Figure : E5AB1JNT	[0173]	Bayonet filling cylinder
	[0173-B]	Adaptor / extension for bayonet filling cylinder [0173]

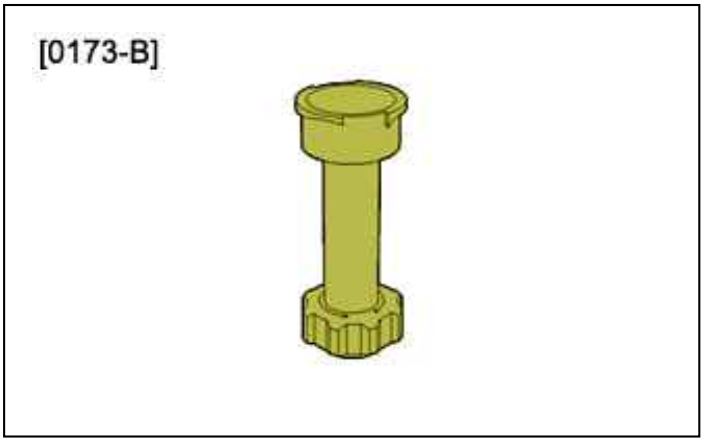

Figure : E5AI009T

[0173-C]	blocking rod for filling cylinder

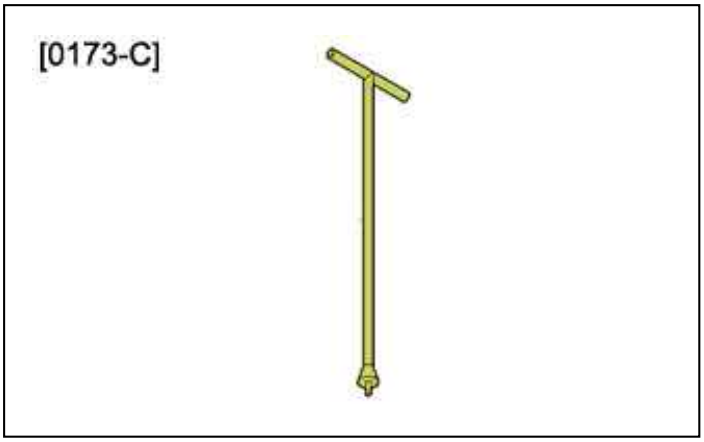

Figure : E5AI006T

[0173-2]	Screw-fit filling cylinder (without extension)

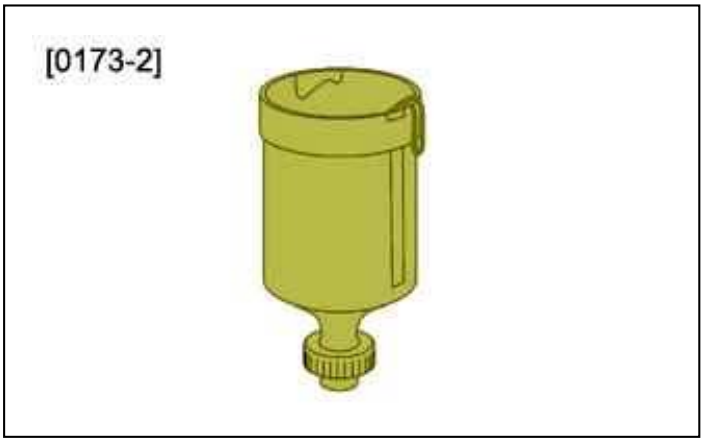

Figure : E5AB1JOT

[0165-2]	Cable pliers for flexible clips

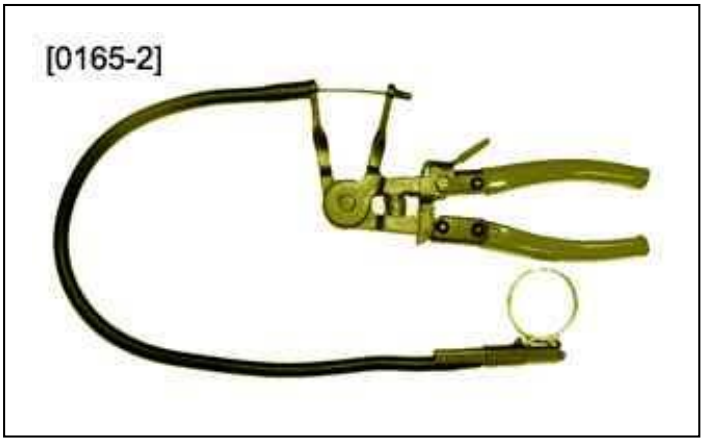

Figure : E5AB0GVT

2. Draining the cooling system

CAUTION : The draining operation is carried out with the engine cold.

Put the vehicle on a hoist.
Remove :

- The protective panel under the engine (according to equipment)
- The de-aeration chamber plug (Carefully)

N.B. : Place a clean tray underneath the engine to recover the coolant.

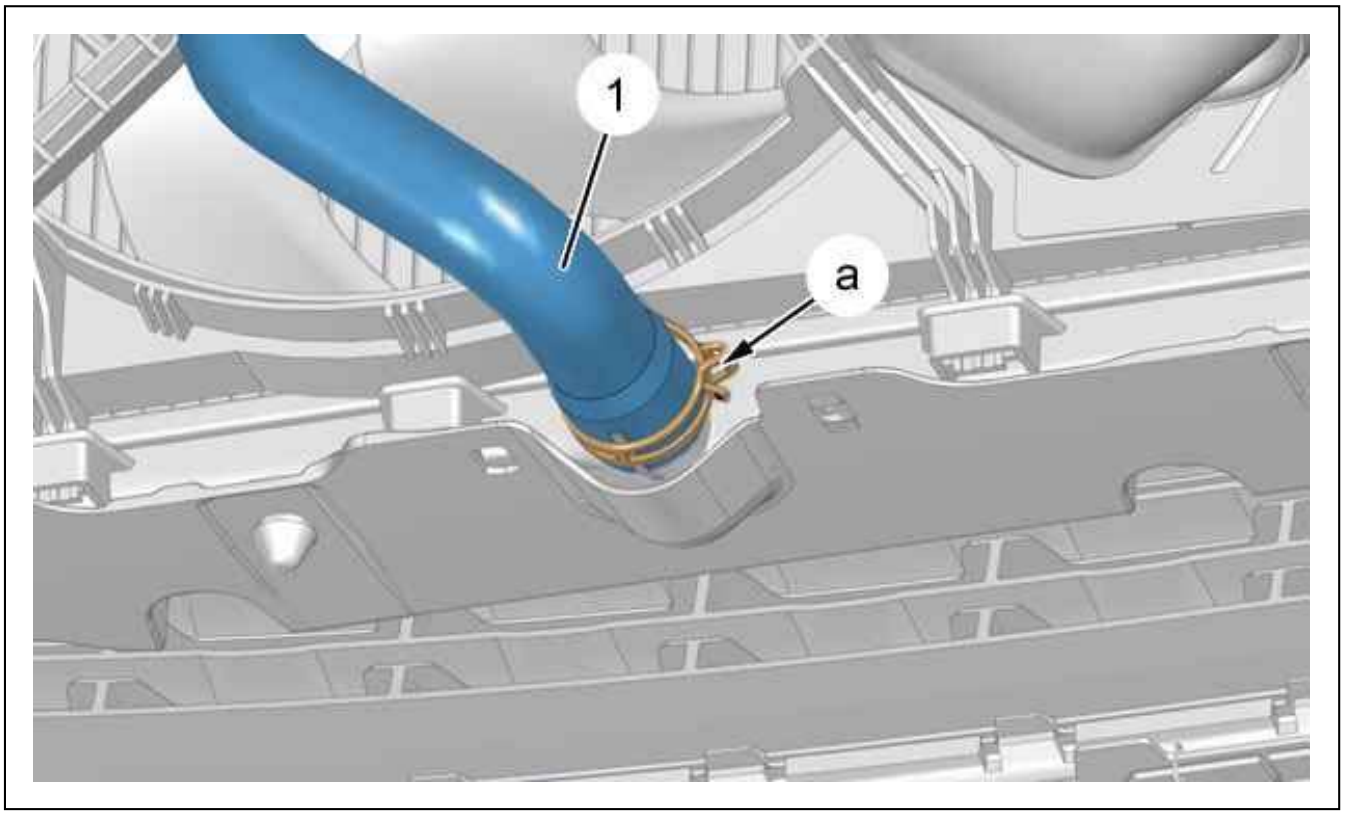

Figure : B1GI00MD

Uncouple the pipe (1) (at "a") ; Using tool [0165-2].
Open the bleed screws located on the coolant outlet housing and the heater pipe.
Allow the coolant to run out.
Drain the cylinder block (if necessary).

CAUTION : If the tool for filling the cooling system by vacuum [01102] is used, measure the quantity of coolan drained.

3. Filling the cooling system

CAUTION : If the cooling system is contaminated, rinse with clean water.

CAUTION : Always use new coolant.

CAUTION : Each filling operation must always be followed by a cooling system degas operation.

3.1. Filling the cooling system by gravity

Connect the hose (1) (at "a") ; Using tool [0165-2].

N.B. : Refit new clips .

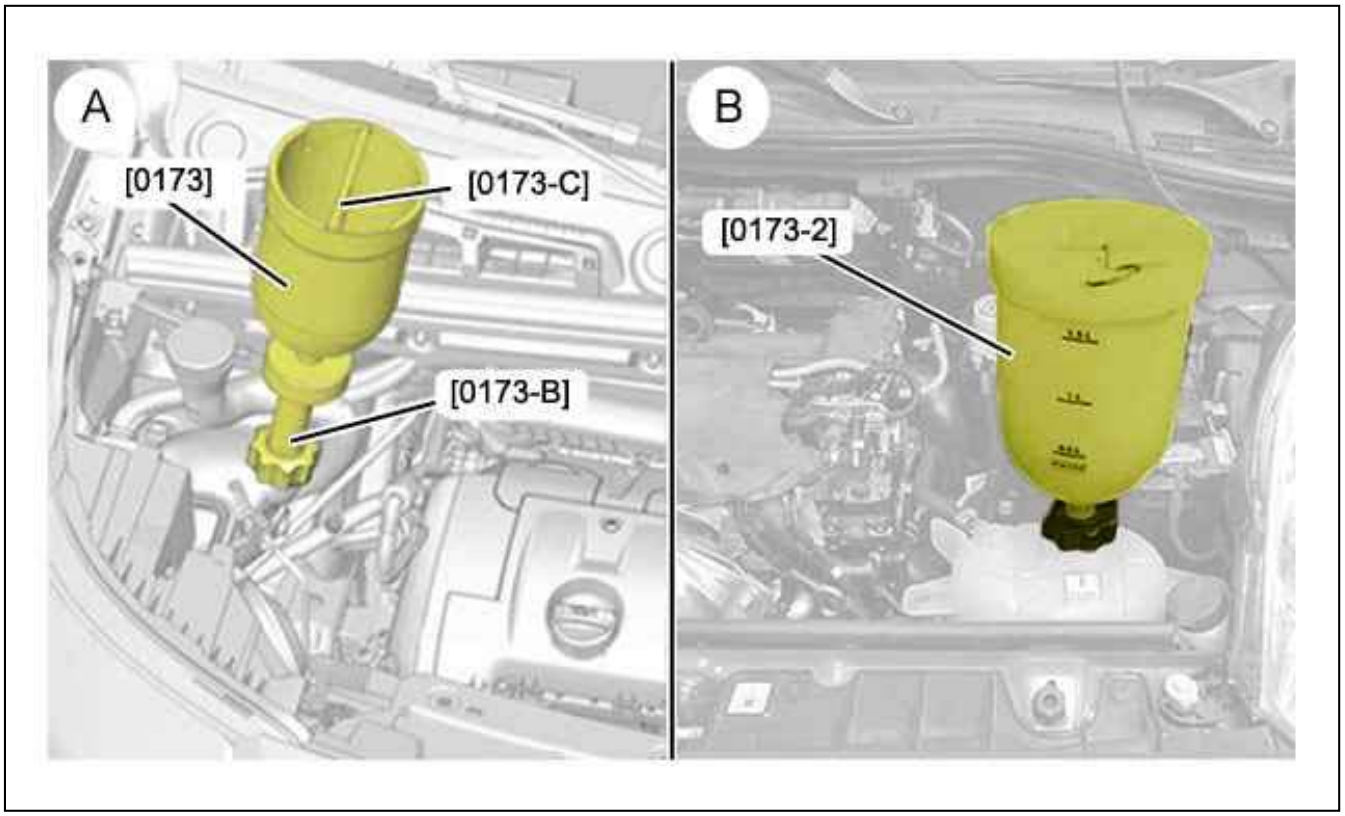

Figure : B1GI09DD

"A" : Fitting with filling cylinder offset ; Using the tools [0173], [0173-B], [0173-C].
"B" : Fitting with filling cylinder direct ; Using tool [0173-2].
Fit the filling cylinder , blank and adaptor assembly on the expansion chamber (according to assembly).
Open the rod on the filling cylinder .
Slowly fill the cooling system with clean coolant.

Close the bleed screw when the fluid is flowing freely without any air bubbles.

N.B. : The filling cylinder should be filled to the 1 litre mark for correct bleeding of the heater matrix.

3.2. Filling using the tool for filling the cooling system by vacuum

CAUTION : Always use new coolant.

Connect the hose (1) (at "a") ; Using tool [0165-2].

N.B. : Refit new clips .

Close the bleed screw .
Put the equipment for filling by vacuum [01102] in place on the expansion bottle .

CAUTION : To avoid entry of air into the circuit, provide for 20 % additional coolant.

Prepare a receptacle of coolant containing the quantity of fluid drained + 20 %.

N.B. : The receptacle must be positioned slightly lower than the equipment for filling by vacuum.

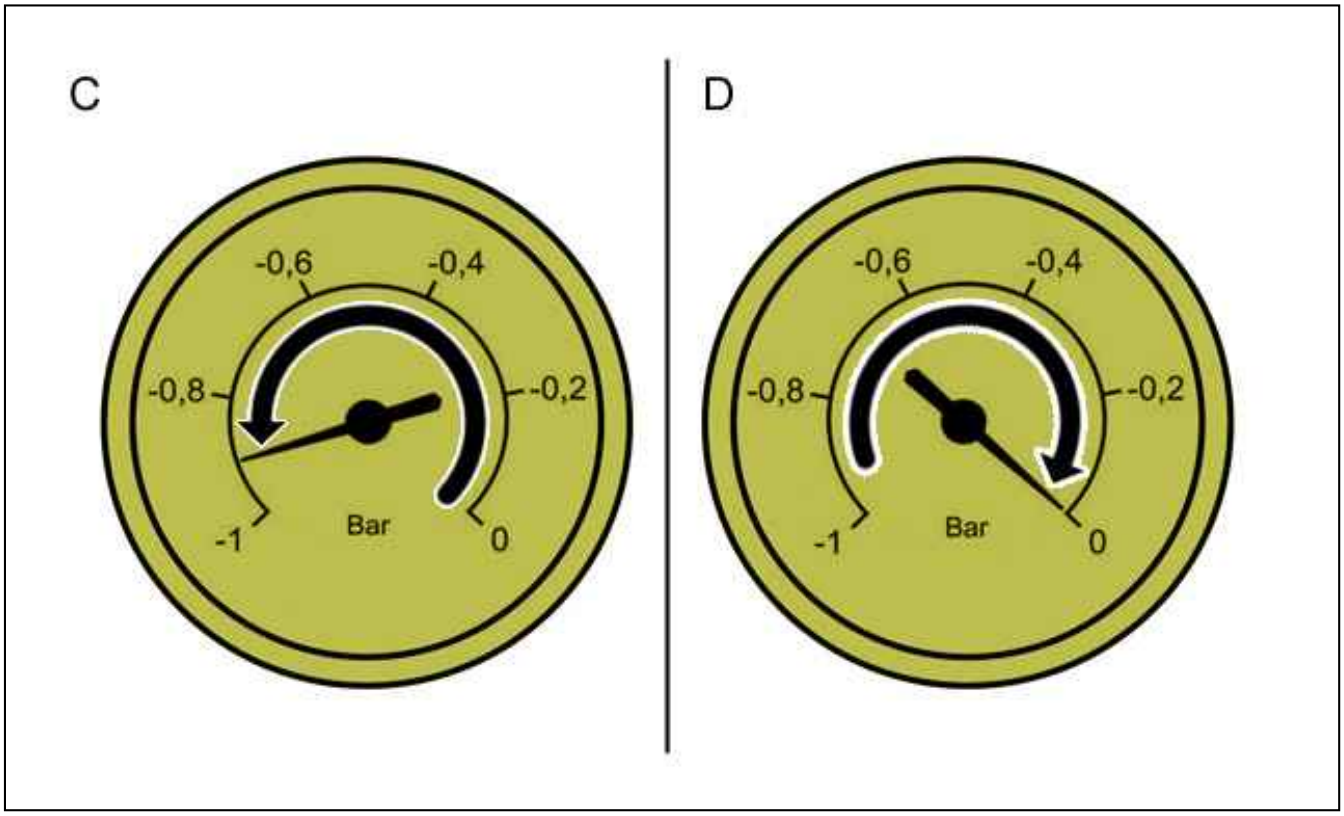

Figure : B1GI09CD

Place the cooling circuit under a vacuum to reach -0,9 bar (diagram "C") :

- Wait 10 seconds and check that the value obtained does not drop
- Fill the cooling circuit completely and wait for the return to 0 bar (diagram "D")

N.B. : The quantity of coolant filled should correspond to the quantity of fluid drained.

Repeat the operation until the cooling system is full (if necessary).

CAUTION : Remove the equipment for filling by vacuum [01102] and rinse the assembly with clean water.

4. Degassing and checking the cooling system

Fit the charging cylinder , closer and adaptor assembly on the expansion bottle, in the case of draining using the tool for filling by vacuum [01102].
Open the rod on the filling cylinder .
Start the engine.

N.B. : The air conditioning control should not operate during this phase.

4.1. Toutes motorisations sauf norme de dépollution EURO 6

Keep the engine speed at 1500 - 2000 rpm, up to the second cooling cycle (cooling fan(s) cutting in and out).

CAUTION : Check that there are no coolant leaks.

4.2. Diesel engine Euro 6

The cutting in of the fan assembly for 10 seconds indicates the switch to after sales degas mode.
Accelerate to an engine speed above 2300 rpm for more than 10 seconds to switch to degas mode.
Maintain the engine speed at 2500 rpm until the fan assembly cuts in again.

4.3. Degassing and checking the cooling system (continued)

CAUTION : Check that the level of coolant in the filling cylinder is sufficient.

Stop the engine.

ESSENTIAL : Do not remove the filling cylinder while the engine is hot.

Leave the engine to cool.
Blank the filling cylinder using the blocking rod .
Remove the filling cylinder , plug and adapter assembly.
Check the coolant level when cold.
Top up the coolant to the "max" level (Cold).

CAUTION : Do not fill the system past the max mark.

Refit and tighten the cap on the header tank .

CAUTION : Check that the cooling system filler cap is locked (For bayonet cap).

Refit :

- The protective panel under the engine (according to equipment)
- The vehicle to its wheels

TIGHTENING TORQUES : COMPONENTS OF THE FUEL CIRCUIT

1. Fuel tank unit

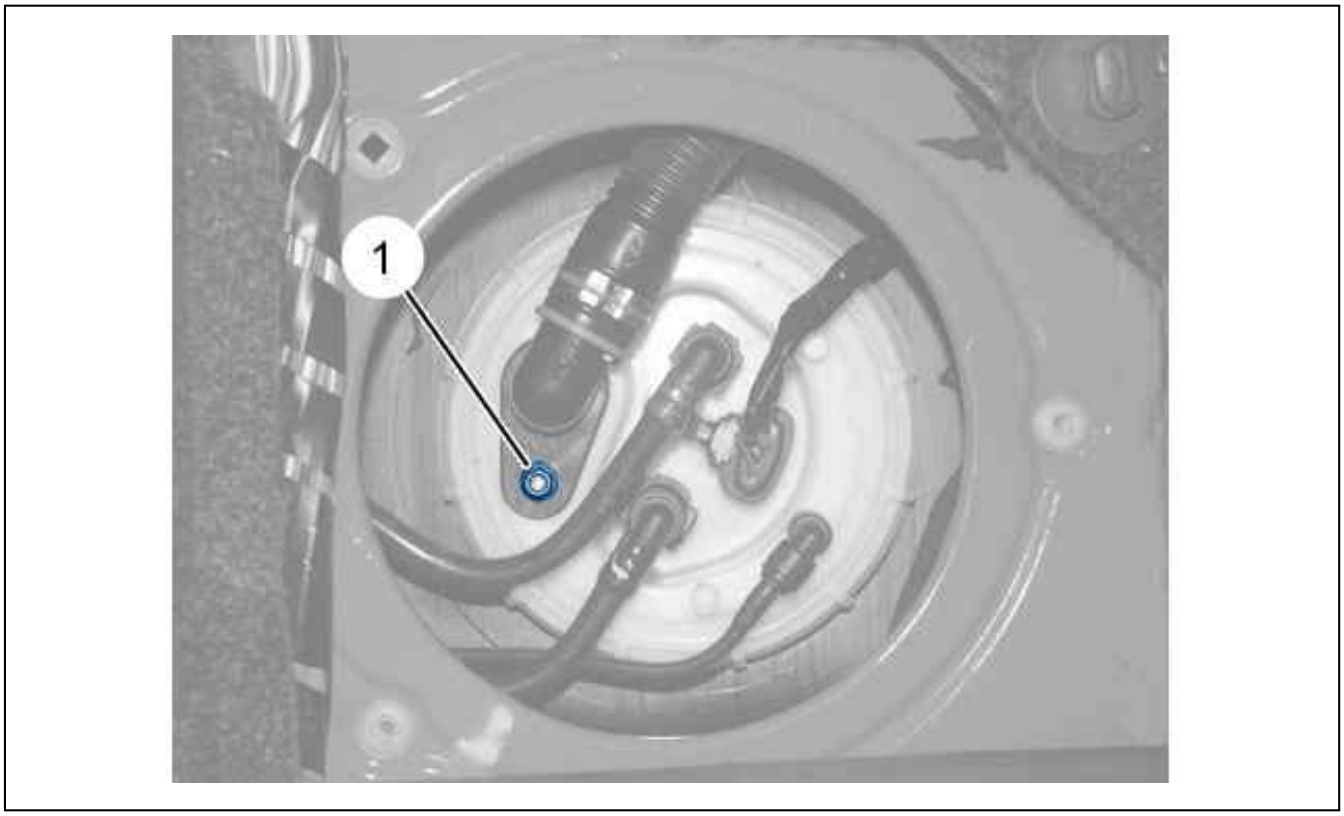

Figure : B1HB0TBD

Reference	Description	Tightening torque
(1)	Breather tube fixing nut	0,4 da.Nm

2. Fuel tank

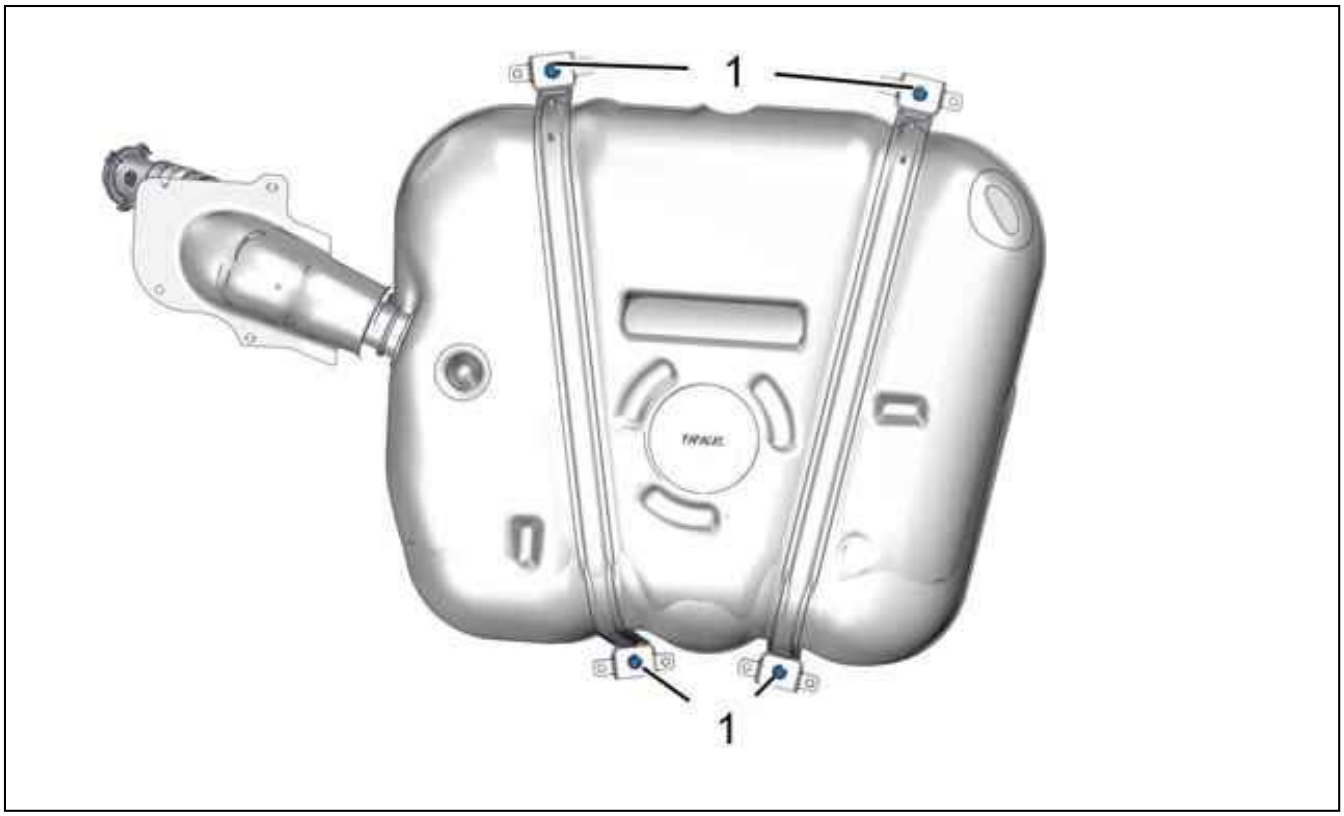

Figure : B1HB0TED

Reference	Description	Tightening torque
(1)	Fuel tank fixing nuts	3,5 da.Nm

CHECK : TURBOCHARGER PRESSURE

ESSENTIAL : Observe the safety and cleanliness recommendations .

1. Tooling

Tool	Reference	Designation
 Figure : E5AB0X8T	[0171-A] [4073-T]	pressure gauge for checking the turbocharging pressure
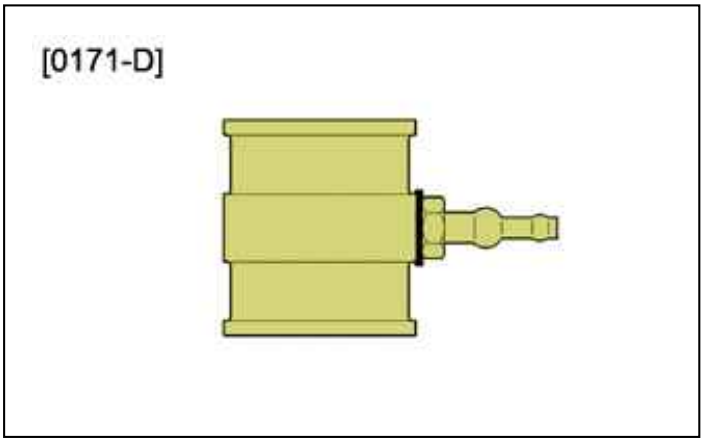 Figure : E5AD025T	[0171-D]	connecting sleeve for checking the turbocharging pressure
	[0171-E] [4219-T]	Adaptor sleeve

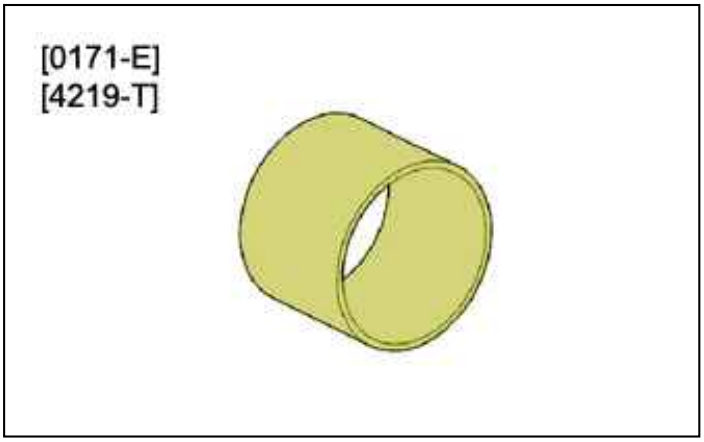

Figure : E5AD026T

2. Removing

ESSENTIAL : Respect the safety and cleanliness recommendations that are specific to high pressure diesel injection (HDi) engines .

Place the vehicle on a 2-post lift.
Remove :

- The protective panel under the engine
- The right-hand protector under the engine

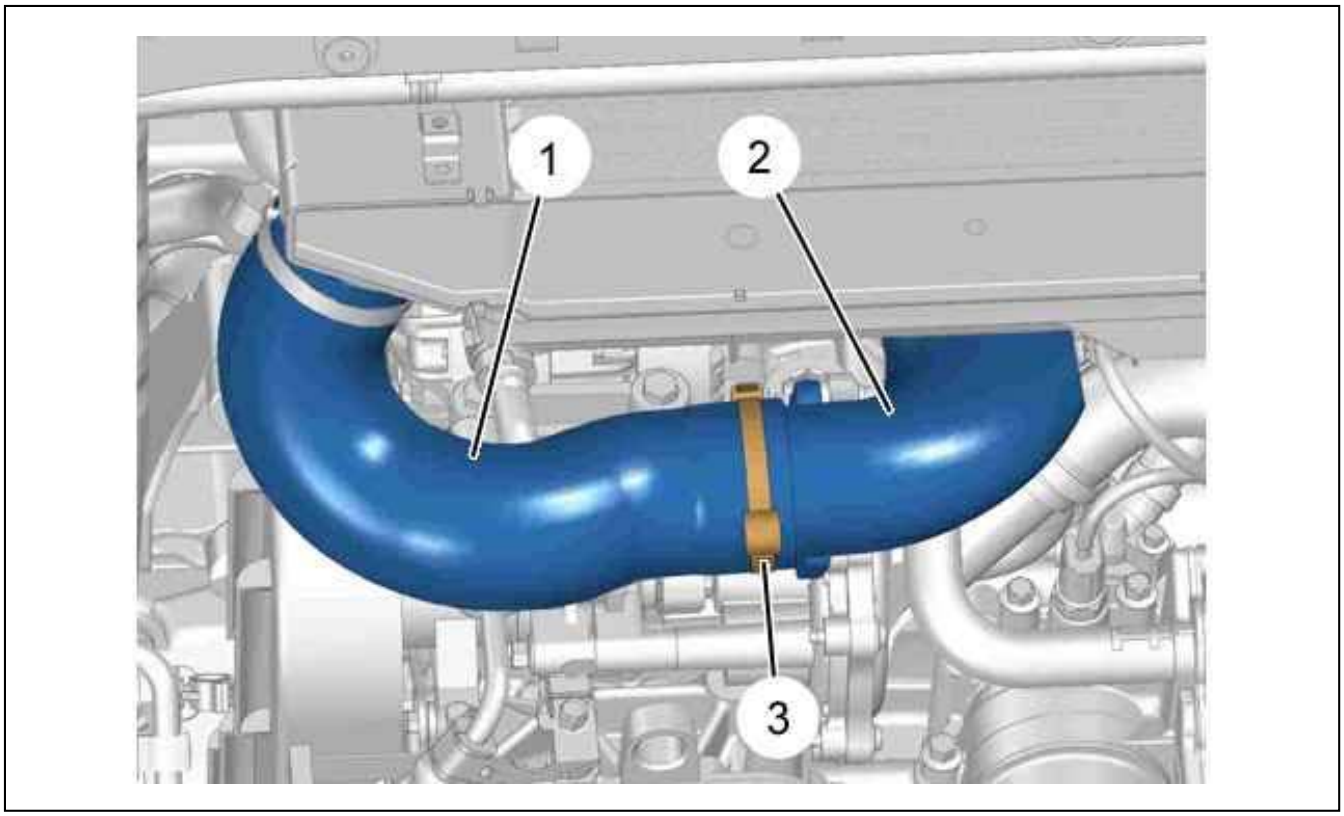

Figure : B1HDZJOD

Remove the collar (3).
Uncouple the pipe (1) from the air duct (2).

3. Check

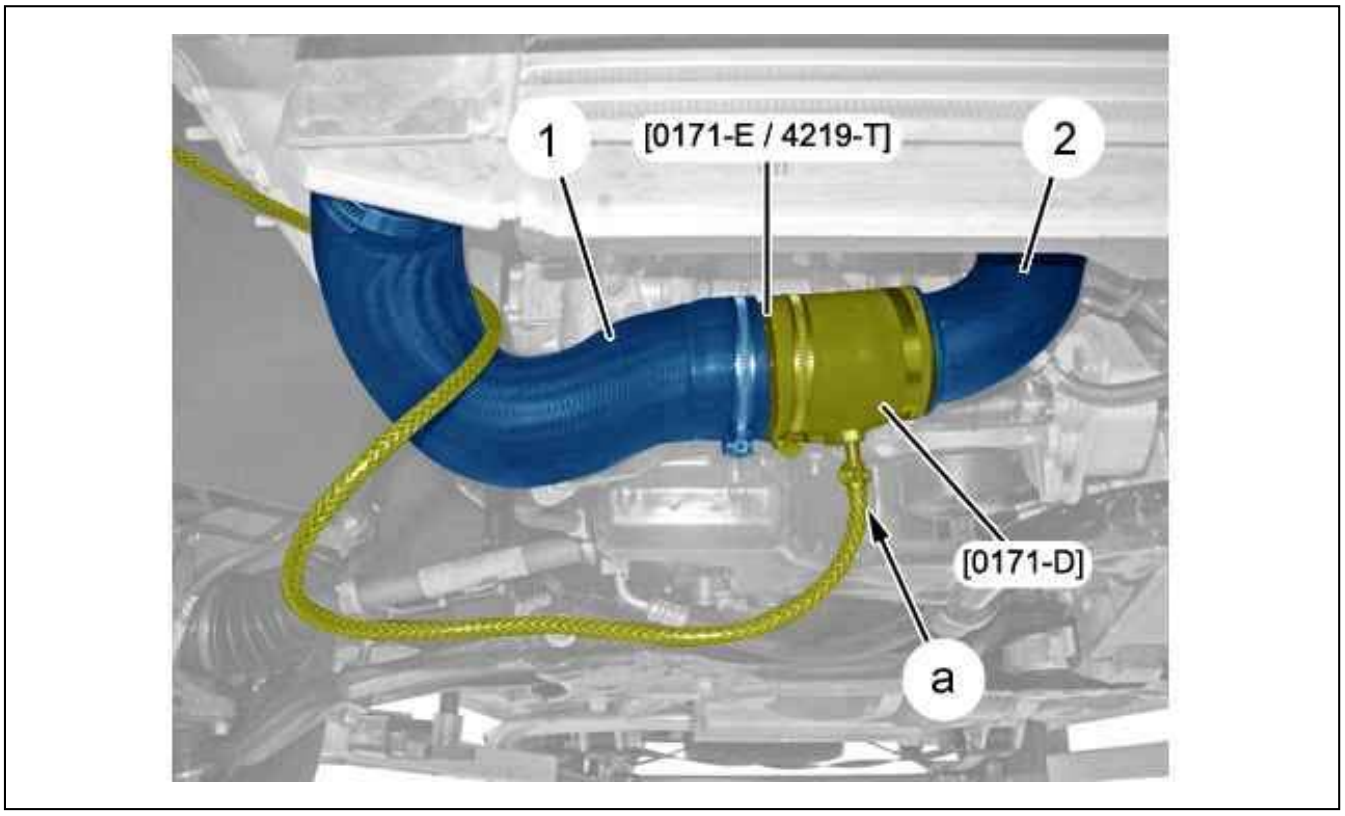

Figure : B1HDZJPD

Insert the checking sleeve [0171-D], fitted with the adaptor sleeve [0171-E / 4219-T], between the air hose (1) and the a duct (2).
Connect the pressure gauge [0171-A / 4073-T] to the checking sleeve [0171-D] using a pipe (at "a").
Place the pressure gauge [0171-A / 4073-T] inside the vehicle.

CAUTION : Observe the following checking conditions : Engine at operating temperature ; Vehicle in working order.

Start the engine.
Gradually accelerate.
Accelerate the engine to full load.
Check the pressure .
Remove tools [0171-A / 4073-T], [0171-D]and [0171-E / 4219 - T].

4. Refitting

Refit :

- The pipe (1)
- The air duct (2)

CAUTION : Replace the clip (3).

Refit :

- The clip (3) (neuf)
- The right-hand protector under the engine
- The protective panel under the engine

Return the vehicle to its wheels.

CHECK : FUEL HIGH PRESSURE SUPPLY CIRCUIT

ESSENTIAL : Observe the safety and cleanliness recommendations .

CAUTION : Before carrying out any work on the high pressure fuel supply circuit, read the faults memory and carry out the actuator tests available in the diagnostic tool .

1. Tooling

tool	Reference	Designation
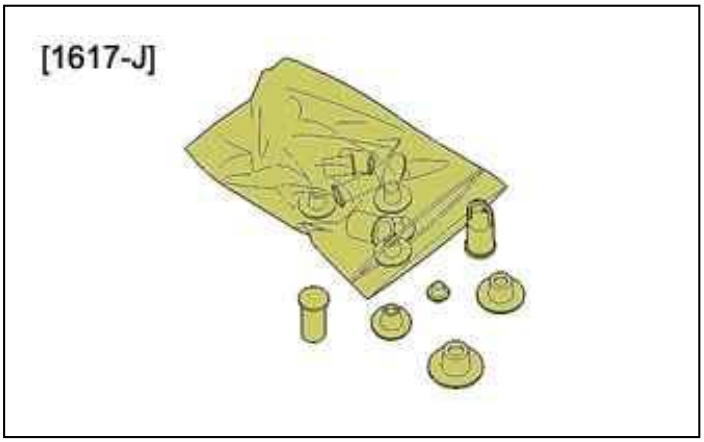 Figure : E5AB0FMT	[1617-J]	[/] plugs kit
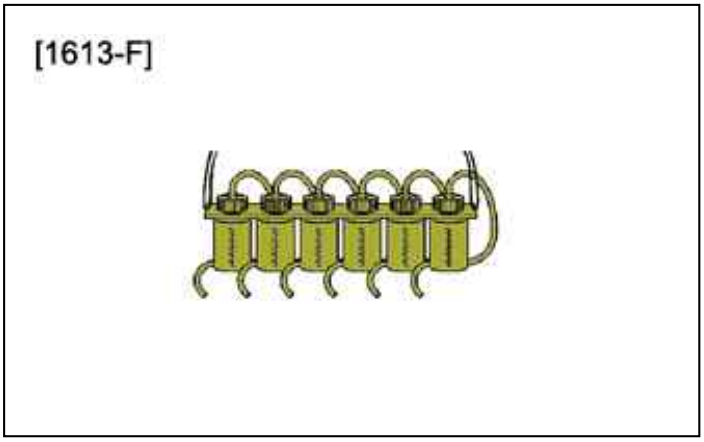 Figure : E5AD012T	[1613-F]	containers for return of diesel injector leaks
	[1613-G]	container for measuring the high pressure fuel injection pump return flow

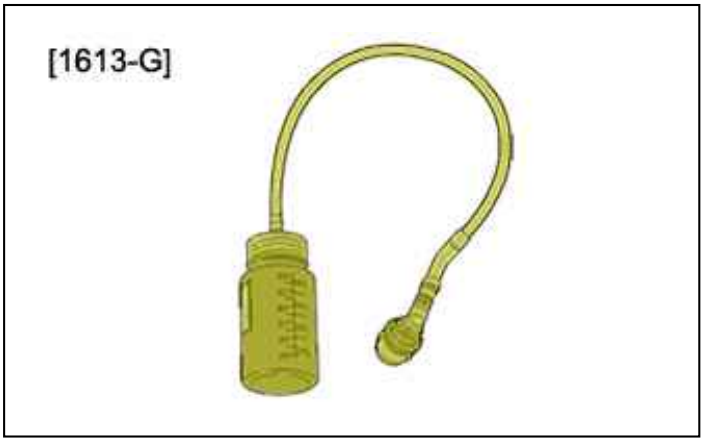 Figure : E5AB0I3T		
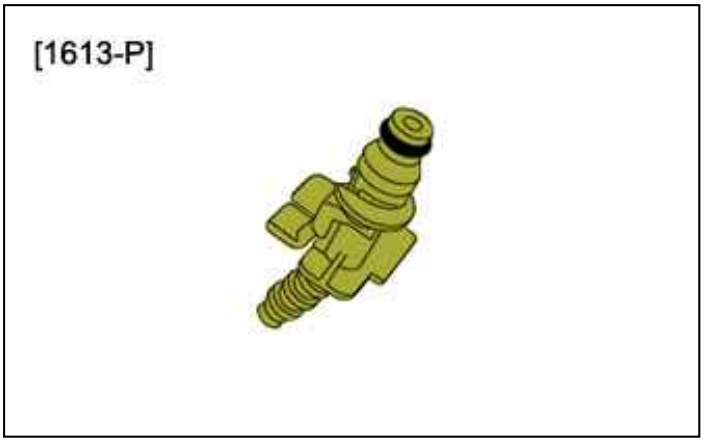 Figure : E5AD013T	[1613-P]	union for return of leaks on DELPHI diesel injector

2. Removing

Remove the engine style cover .

3. Preliminary checks

3.1. Low pressure fuel circuit

Check the following components :

- The quantity of fuel in the tank : 15 litres minimum
- Fuel quality (if in doubt over the fuel quality, use an auxiliary tank with a filter, filled with fuel which you know where it came from)
- That there are no leaks on the high pressure fuel circuit
- The low pressure fuel supply circuit (filter clogged, condition of the pipes, no air bubbles) : Refer to the low pressure fuel circuit checking method

3.2. Electrical circuit

Remove the engine style cover .
Check the elements which could cause system malfunctions :

- The battery charge
- The deactivation of the engine immobiliser
- The condition of the connectors and electrical harnesses

- The classification of the injectors ; Using the diagnostic equipment

4. Checking the fuel high pressure circuit

4.1. Check : Fuel pressure regulation

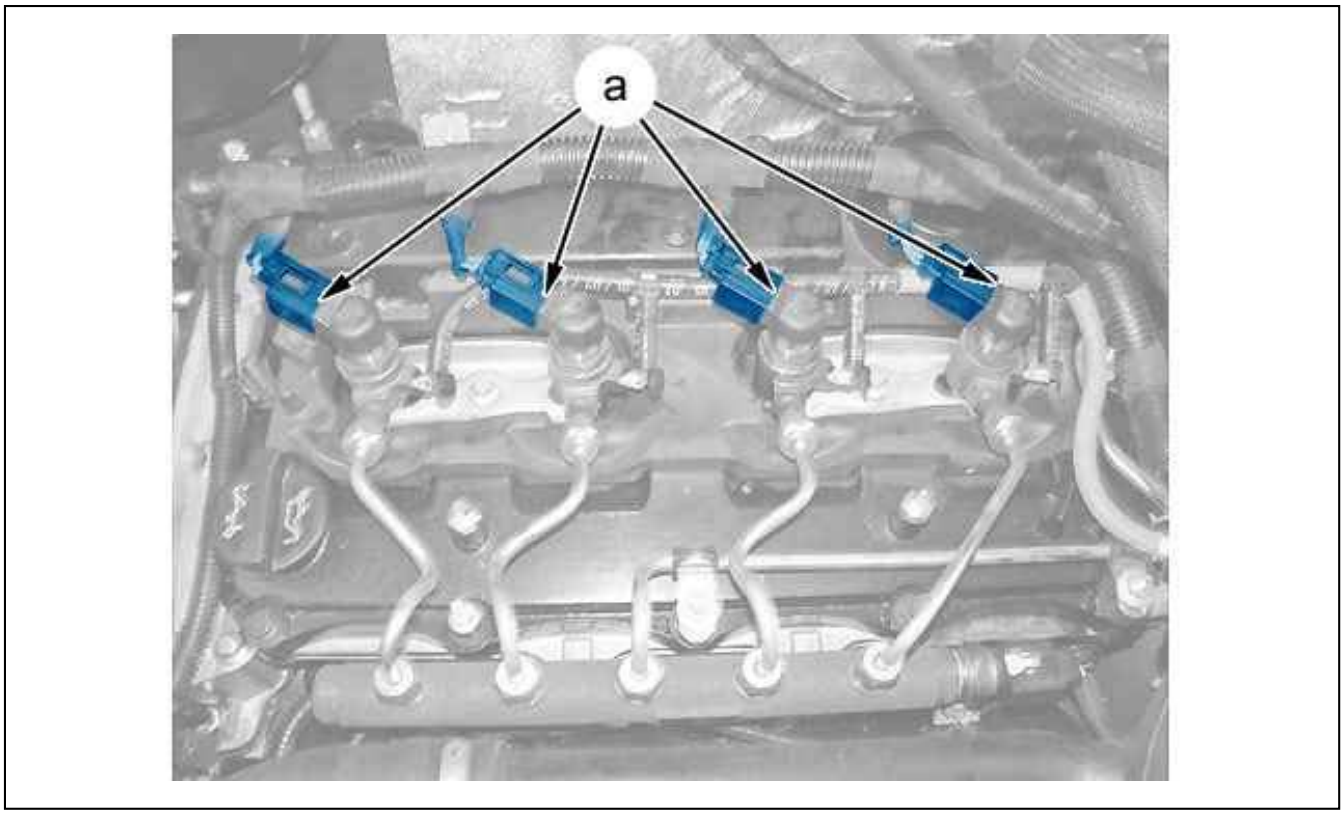

Figure : B1HDZL2D

Disconnect injectors (at "a").
Connect the diagnostic tool to the vehicle's diagnostic socket ; Select in succession the following menus :

- Parameter Measurements menu
- Fuel circuit information
- Fuel pressure ordered - Measured fuel pressure

Operate the starter for 5 seconds ; Read the maximum values of the ordered and measured pressures on the diagnostic tool simultaneously.

CAUTION : The ordered and measured pressures must be identical (± 40 bars) and 120 bars minimum.

N.B. : If the pressures read are identical, the system is providing sufficient pressure to start and operate normally Confirm the preliminary checks, otherwise contact the technical assistance platform.

N.B. : If the pressures read are different, the system does not have the pressure required : Check the leak return from the pump and from the injectors.

Connect the connectors (at "a").

4.2. Check the high pressure pump

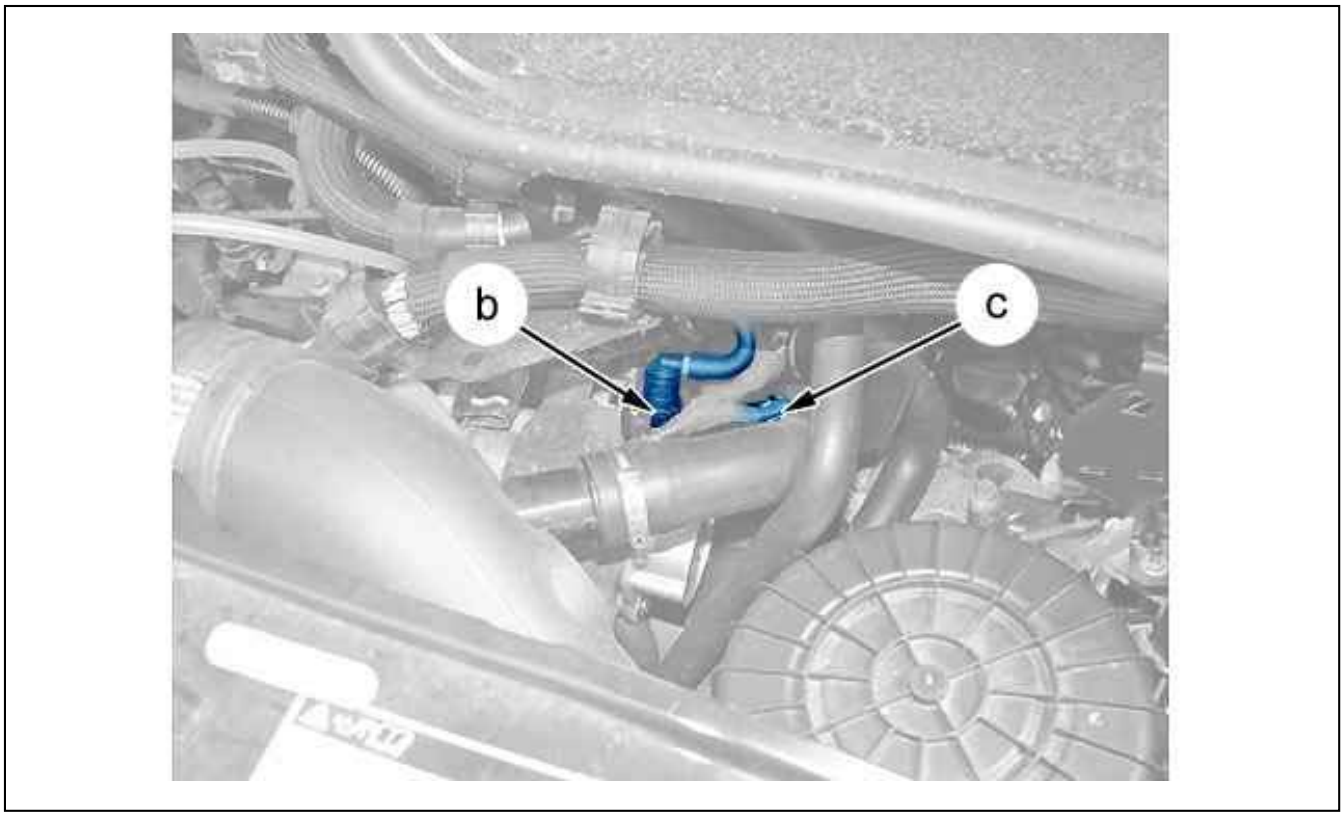

Figure : B1HDZL3D

Disconnect the fuel pressure regulator (at "c").
Uncouple connection (at "b").
Couple the tool [1613-G] on the high pressure fuel pump (at "b").

CAUTION : Close the union ; Using tool [1617-J].

Abide by the following conditions :

- Fuel pressure regulator disconnected (at "c")
- Unions on the low pressure fuel return pipe plugged

Operate the starter motor for 15 seconds.

CAUTION : The maximum volume collected should not exceed 25 ml.

N.B. : In the case of a volume which exceeds this value, replace the high pressure pump then repeat the check.

CAUTION : Carefully clean, plug and store the tool used.

Remove the tool [1613-G].
Disconnect the fuel pressure regulator (at "c").
Connect the union (at "b").

4.3. Injector check

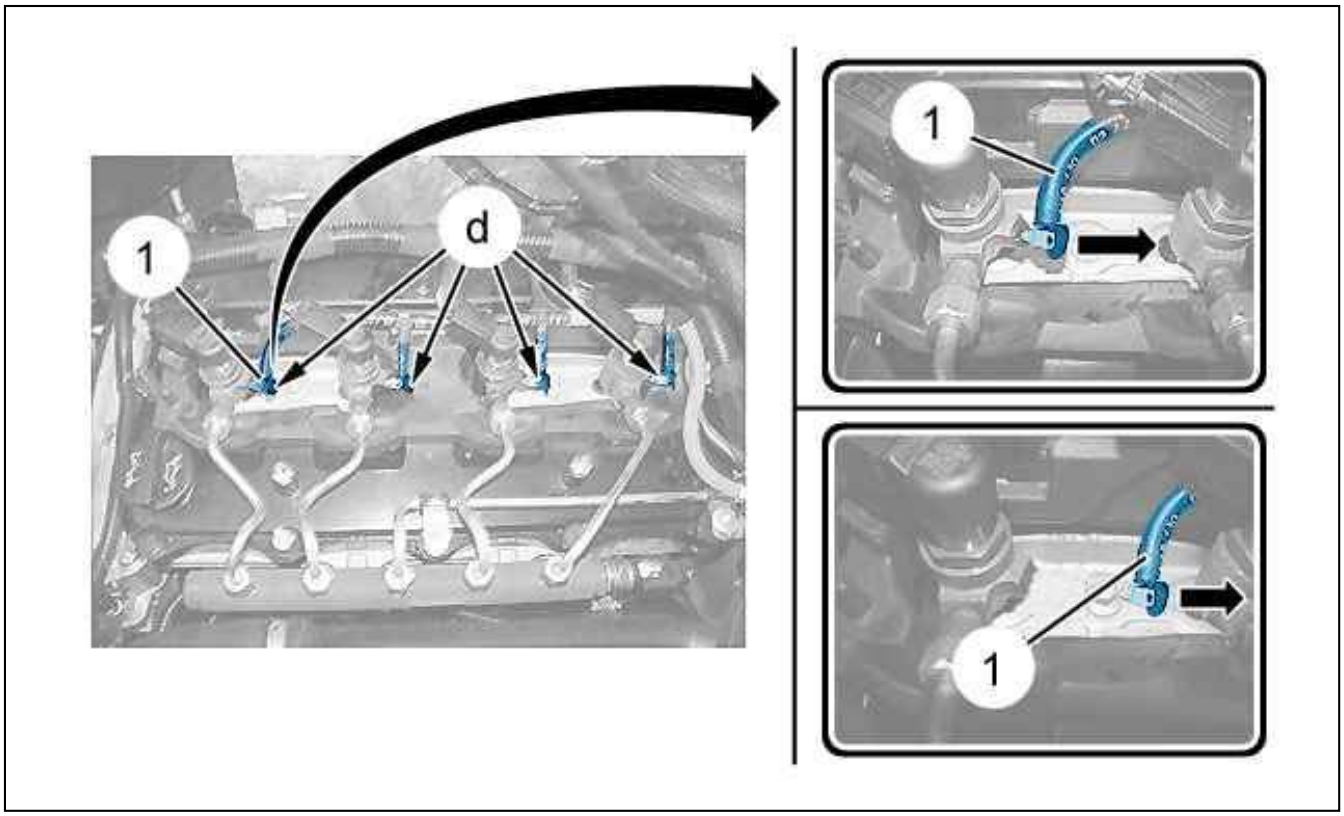

Figure : B1HDZL4D

Uncouple the low pressure fuel return pipe (1) from the injector on the timing side towards the high pressure pump (at "d") :

- Pull the locking tab rearwards
- Extract the fuel return click-fit union ; Carefully

CAUTION : Immediately plug the injector unions on the low pressure fuel return pipe (1) ; Using the plugs [1617-J].

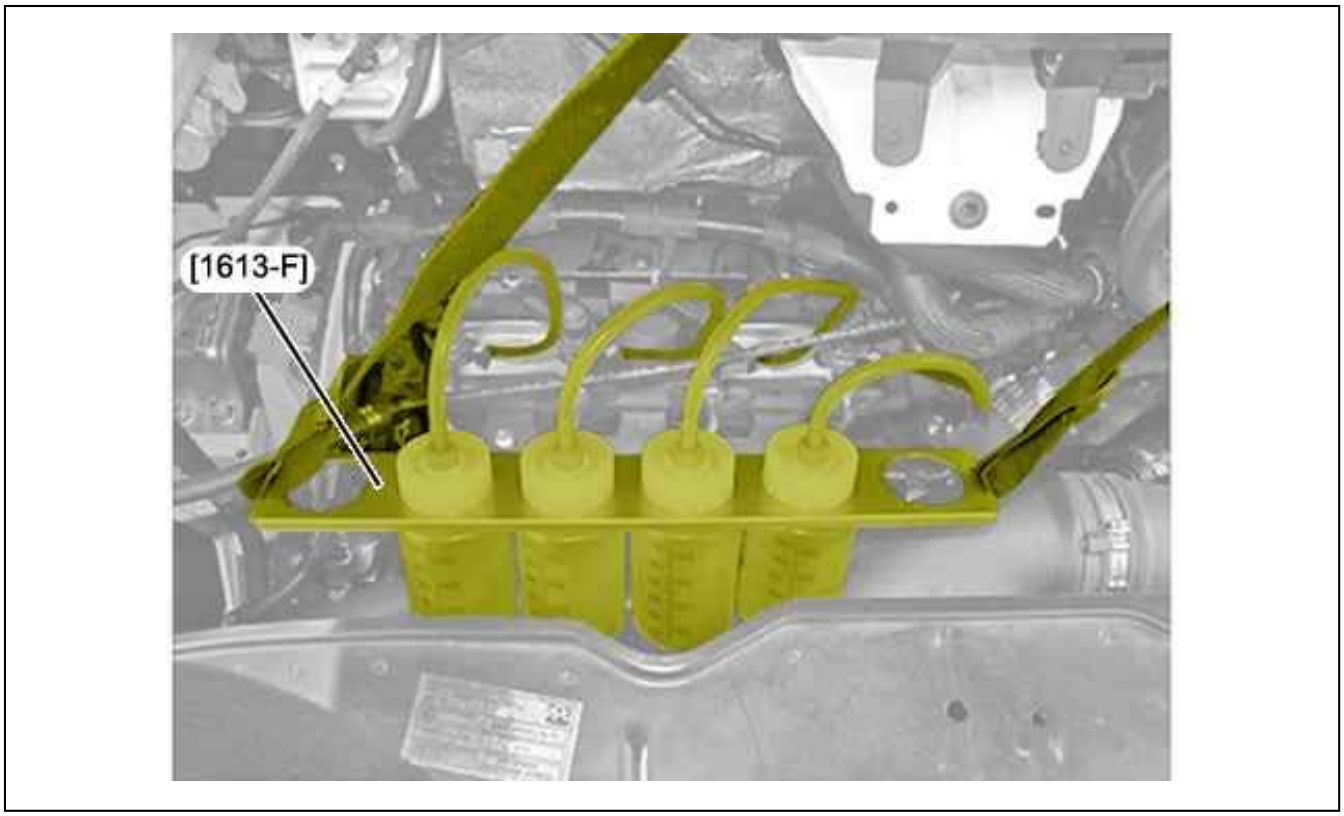

Figure : B1HDZL5D

CAUTION : Check the condition of the O-rings on the unions [1613-P] (replace if necessary).

Couple the 4 unions [1613-P] on the injectors (at "d") :

- Check that the tab is open (Pull rearwards)
- Insert the union fully home
- Push the locking tab
- Pull gently on the union to check that it is in place

Hook the container holder bar [1613-F] on the bonnet.
Abide by the following conditions :

- Injectors connected (at "a")
- Unions on the low pressure fuel return pipe (1) plugged

Method of operation :

- The engine starts : Allow the engine to idle for 5 minutes
- The engine will not start : Operate the starter motor for 15 seconds

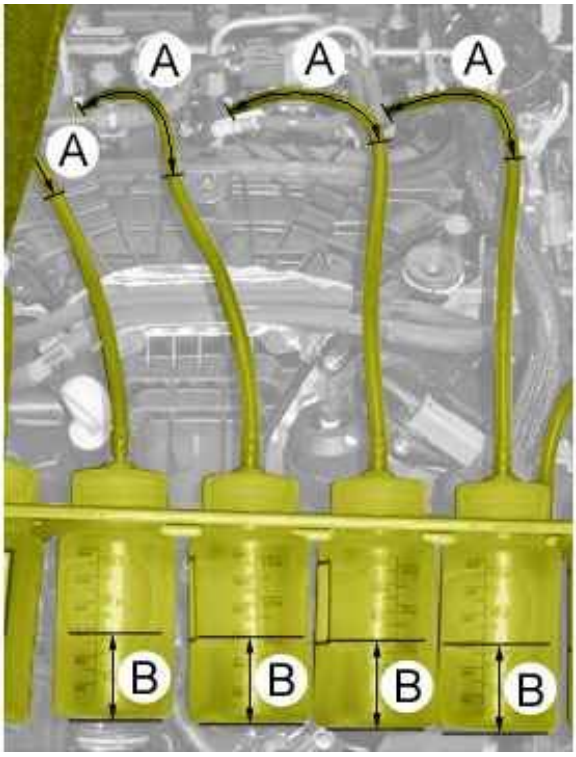

Figure : B1HDZ9CD

"A" : Volume collected (Engine not running).
"B" : Volume collected (engine running).

CAUTION : The maximum volume collected must not exceed 60 ml per container (engine running) or 24 cm length ir each pipe of inside diameter 4 mm (engine not running).

N.B. : If one or more injectors exceed this value, replace them then repeat the check.

CAUTION : Clean, cap and carefully store the tools used.

Remove the tools [1613-F], [1613-P].

CAUTION : Always replace the low pressure fuel return pipe (1) ; Risk of leaks.

Pre-position the low pressure fuel pipe (1) on the injectors.
Couple up the low pressure fuel return pipe (1) :

- Check that the tabs are open (Pull rearwards)
- Insert the unions fully in the order injector N°1, 2, 3, 4
- Push the locking tabs
- Pull carefully on the unions to check they are in place

N.B. : Injector N° 4 (timing side).

5. Refitting

Refit the engine style cover .

6. Final check

Carry out :

- Clearing of the faults memory ; Using the diagnostic equipment
- A road test
- Reading of the faults memory ; Using the diagnostic equipment

CHECK : LOW PRESSURE FUEL SUPPLY CIRCUIT

ESSENTIAL : Observe the safety and cleanliness recommendations .

1. Tooling

tool	Reference	Designation
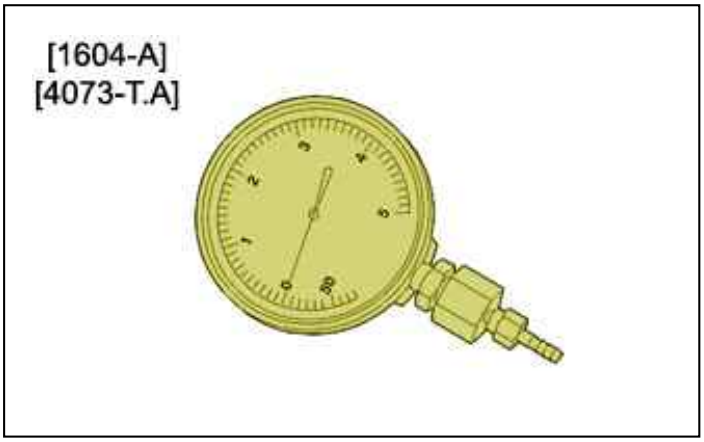 Figure : E5AB0TFT	[1604-A] [4073-T.A]	pressure gauge for checking the turbocharging pressure
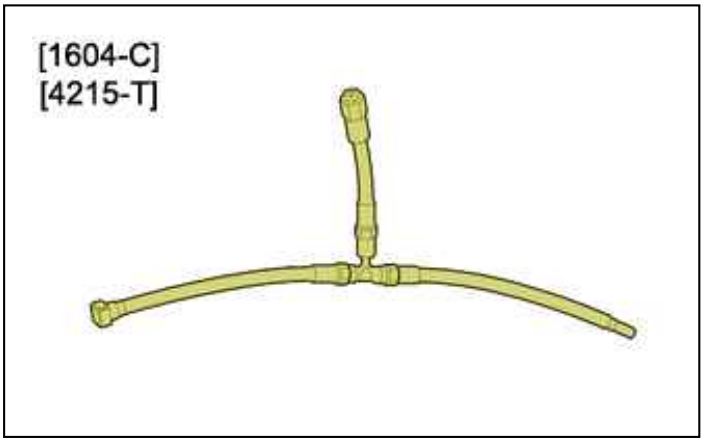 Figure : E5AB0TGT	[1604-C] [4215-T]	10 mm diameter union for low pressure take-off

2. Check

ESSENTIAL : Respect the safety and cleanliness recommendations that are specific to high pressure diesel injection (HDi) engines .

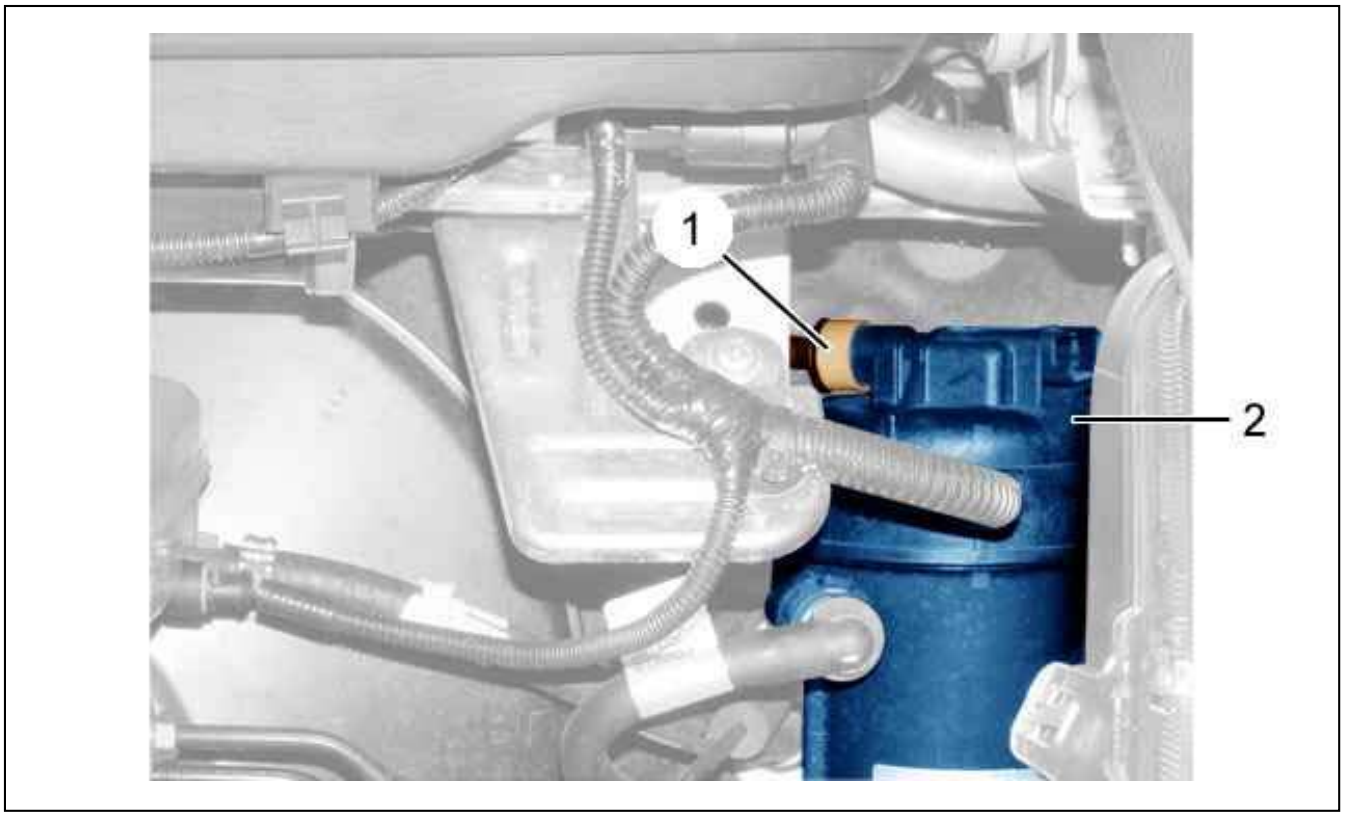

Figure : B1HP2F7D

Uncouple the fuel pipe (1) from the fuel filter (2).
Unclip the fuel filter (2) from its support.

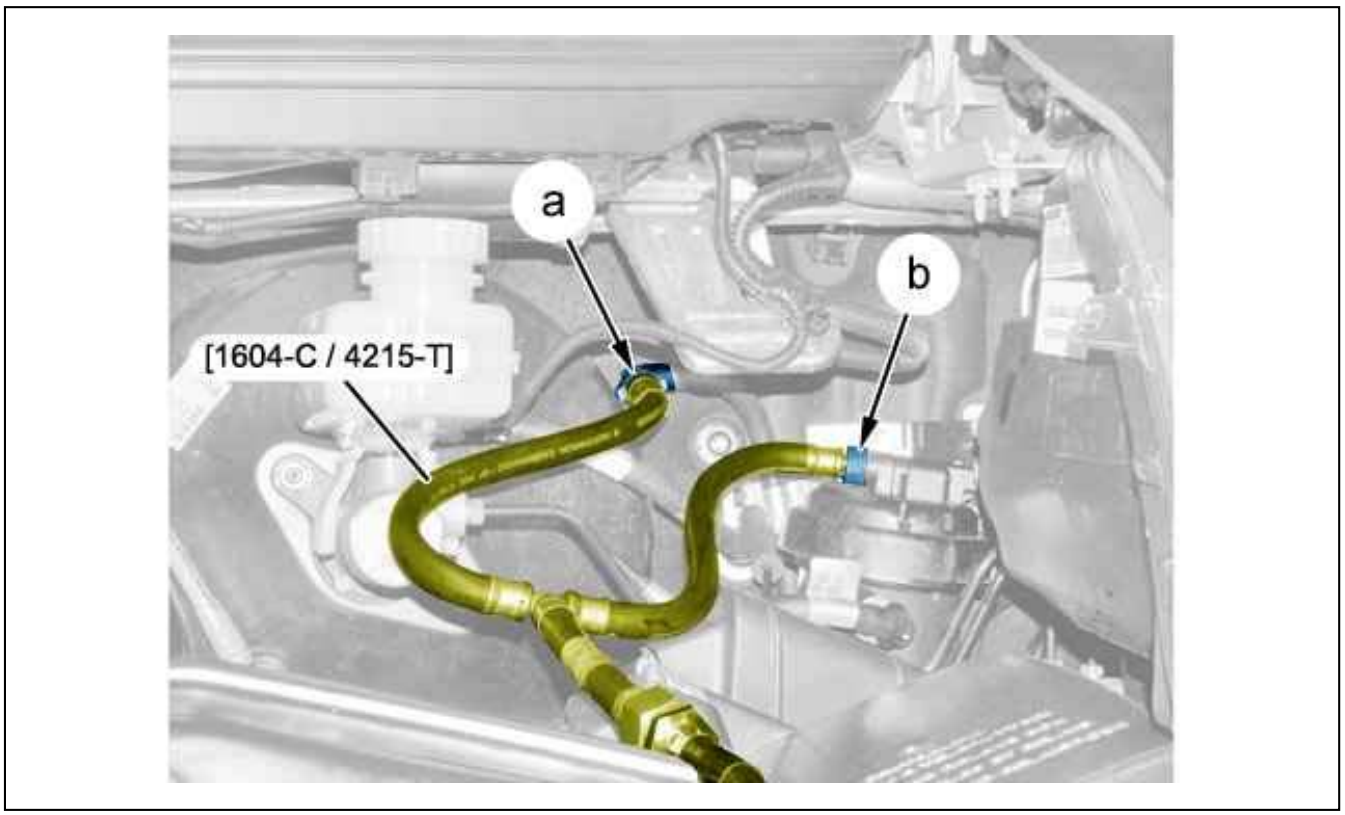

Figure : B1HDZKOD

Connect the tool [1604-C / 4215-T] between the priming pump and the fuel filter at "b" on the fuel filter inlet and at "a" or

the fuel pipe.

N.B. : This connection makes it possible to ascertain the pressure of the scavenge pump.

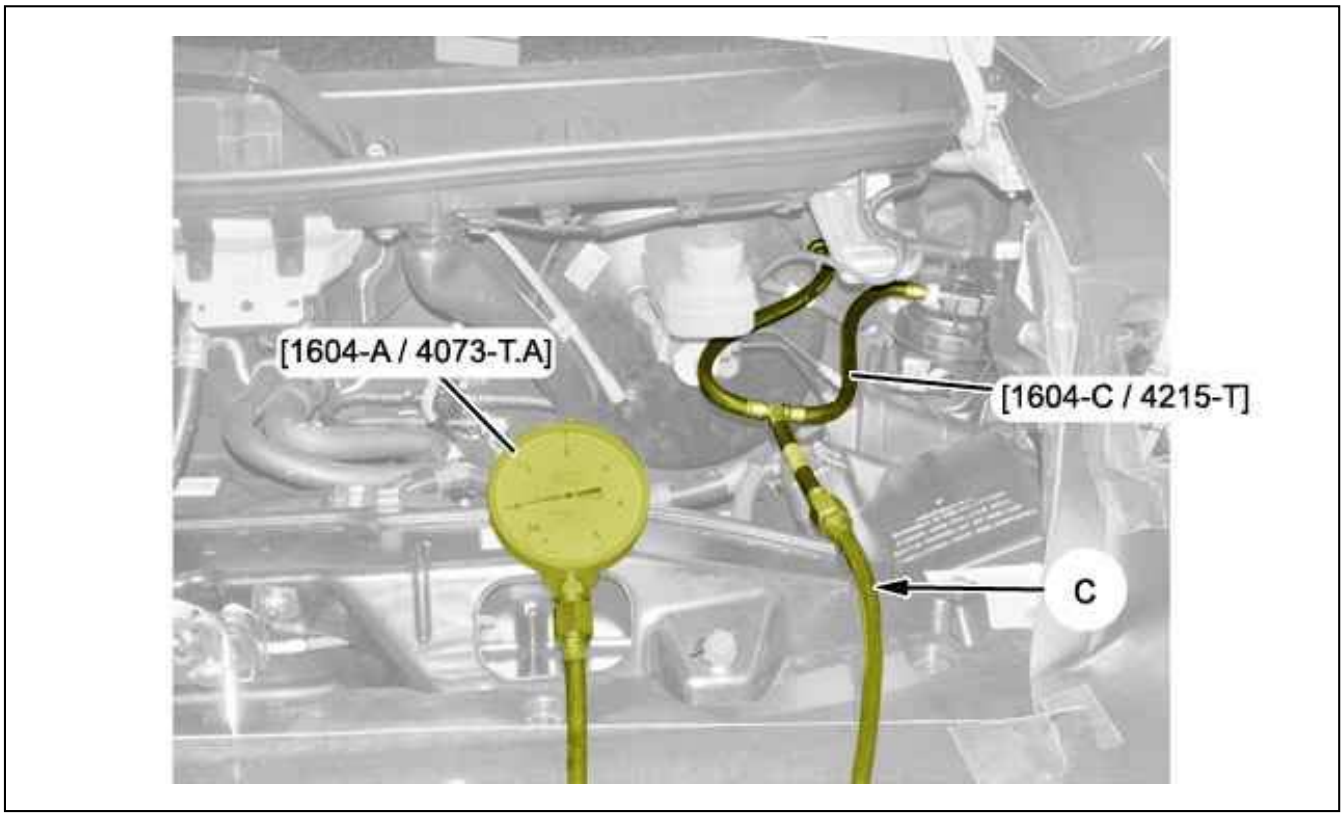

Figure : B1HDZGHD

Ensure that the tool 1604-A / 4073-T.A is clean.
Connect the pressure gauge [1604-A / 4073-T.A] to the tool [1604-C / 4215-T] using a pipe (at "c").
Position the pressure gauge [1604-A / 4073-T.A] in the vehicle.
Start the engine.
Engine running at idle speed.
Compare the pressure values taken on the pressure gauge with the ones in the table .

REMOVAL - REFITTING : ENGINE ECU

ESSENTIAL : Ensure that the precautions relating to safety and cleanliness are adhered to .

CAUTION : Before adding or replacing any parts, ensure that the customer has not lost their confidential card.

1. Location

The engine ECU is situated under the bonnet, on the left-hand side close to the air filter.

2. Removal

Disconnect the battery.

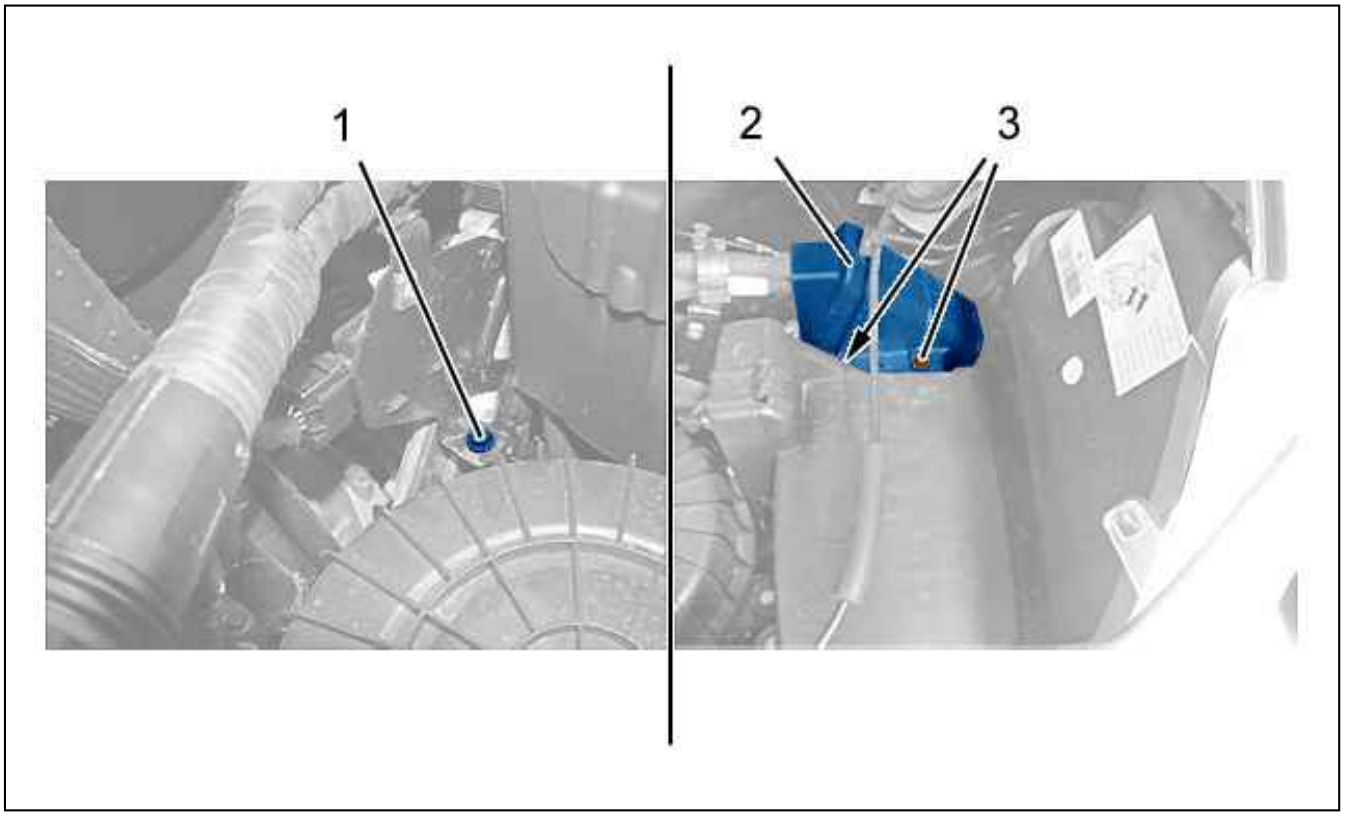

Figure : B1HG372D

Unscrew nut (1).
Take down :

- The nuts (3)
- The cover (2) of the engine management ECU unit

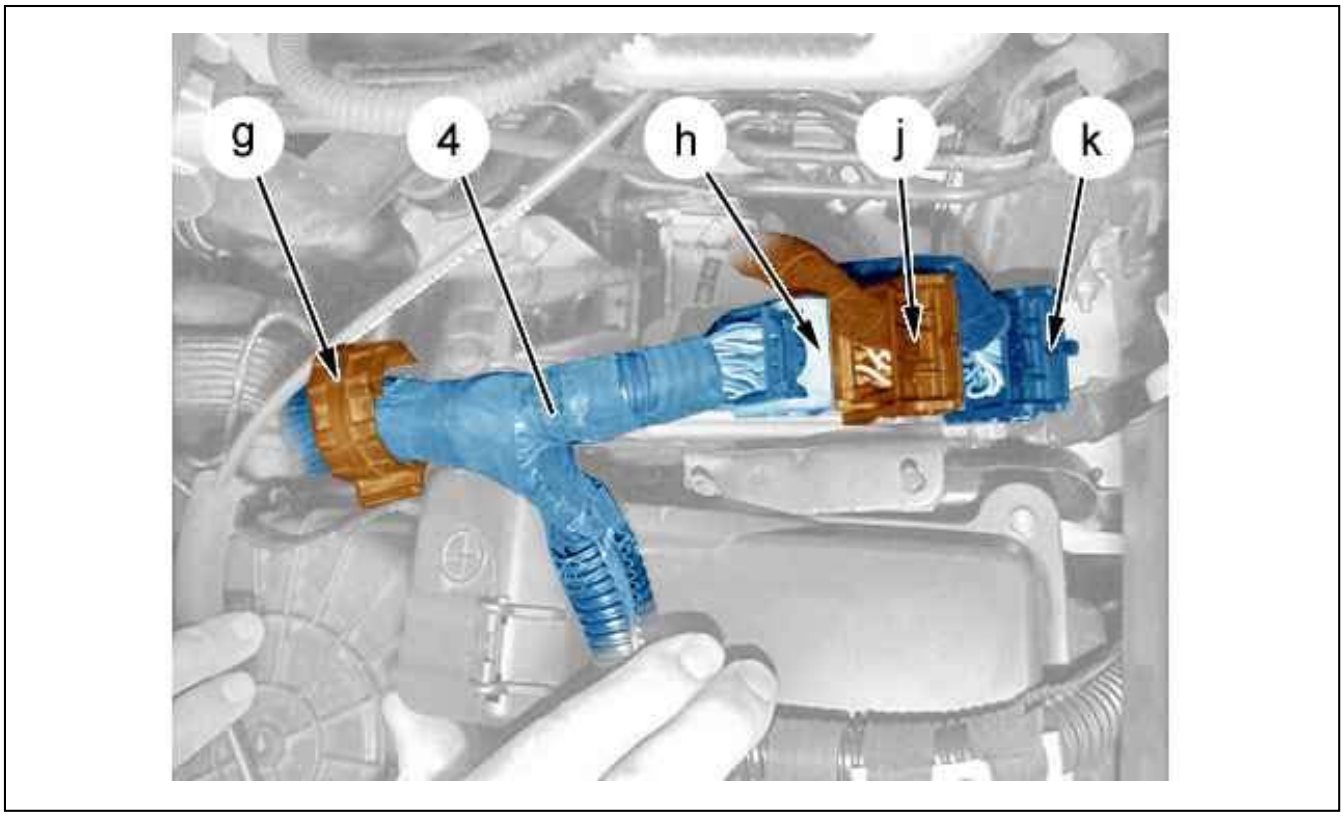

Figure : B1HG3HLD

Disengage the electric engine harness (4) (at "g").

N.B. : Release the locking clips from the connectors of the engine ECU (at "h", "j", "k").

Disconnect the connectors of the engine ECU (at "h", "j", "k").
Lift the engine ECU assembly with its mounting.

3. Common operations

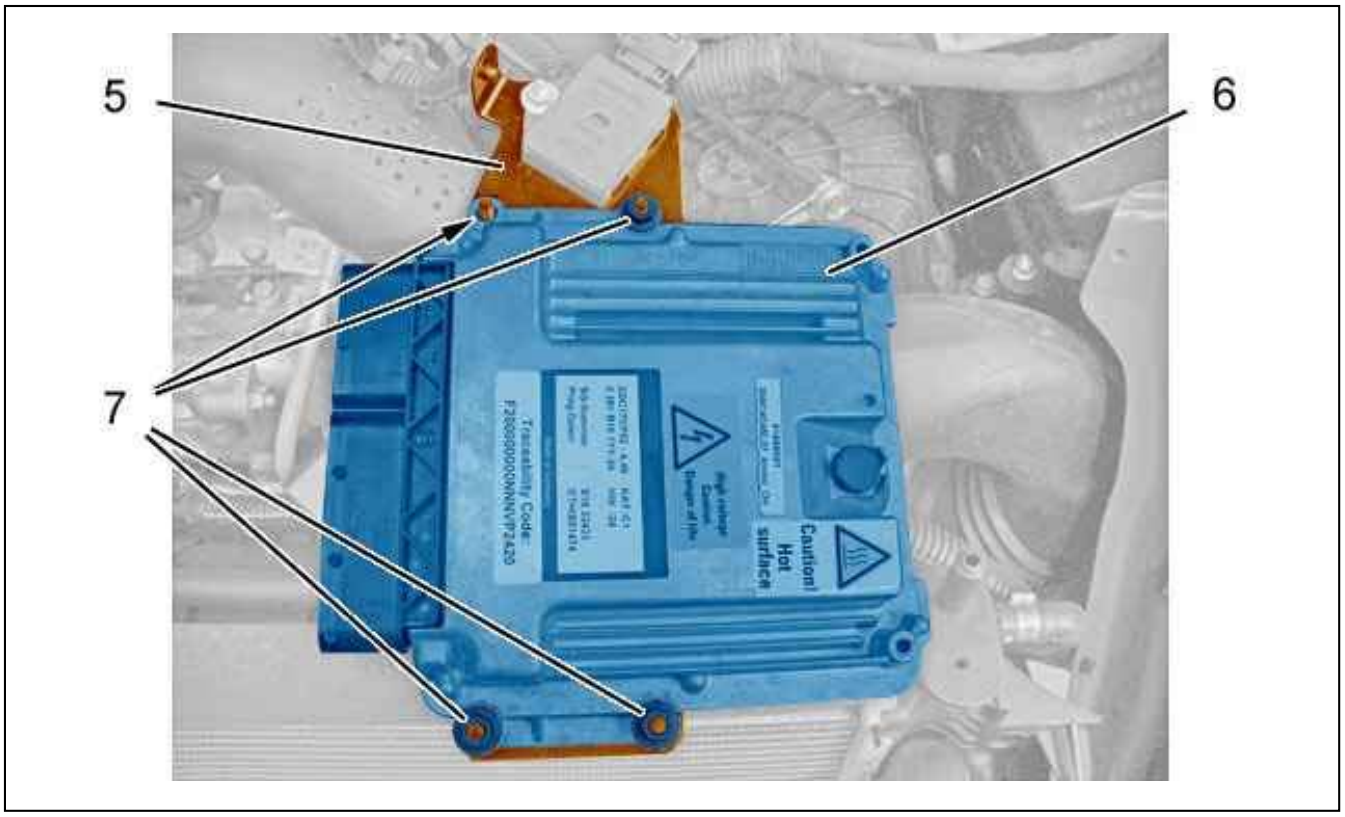

Figure : B1HG3HMD

Remove the nuts (7).
Remove the engine management ECU (6) from its mounting (5).

4. Refitting

Fit :

- The engine management ECU (6) on its support (5)
- The nuts (7)

Reposition the engine ECU assembly (6) and its mounting (5).
Reconnect the connectors of the engine management ECU (6) (at "h", "j", "k").
Clip the locking clips on the connectors of the engine ECU (6) (at "h", "j", "k").
Position the engine harness (4) (at "g").

5. Refitting (continued)

Fit :

- The cover (2) of the engine management ECU unit (6)
- The nuts (3)

Retighten the nut (1).

CAUTION : Perform the operations to be carried out following reconnection of the battery.

Connect the battery.

6. Operations to be carried out : After replacing the engine management ECU

CAUTION : Systematically perform the operations below after replacing an engine ECU (6).

CAUTION : Swapping an engine ECU (6) between two vehicles results in it being impossible to start either vehicle.

When changing an engine ECU (6), it is necessary to use the diagnostic tool to run the procedure for replacing an engir ECU (6) from the "replacement parts" menu.
Conditions to be met to carry out the procedure :

- Be in possession of the access code to the built-in systems interface (written on the customer’s confidential card)
- Be in possession of a new engine ECU (6)
- Use the diagnostic tool

7. Engine management ECU downloading

Updating of the software of the engine ECU (6) is by downloading (Engine ECU (6)) (ECU fitted with a flash EPROM)).

N.B. : This operation is performed using diagnostic equipment.

Perform the downloading of the engine ECU (6) (if necessary).

8. Procedures for returning under warranty

Disconnecting the engine ECU (6) automatically locks it up.

CAUTION : If returning the component under warranty, return the engine ECU (6) together with the access code.

REMOVING - REFITTING : DIESEL INJECTORS

ESSENTIAL : Observe the safety and cleanliness recommendations .

1. Tooling

Equipment : leak detector .

tool	Reference	Designation
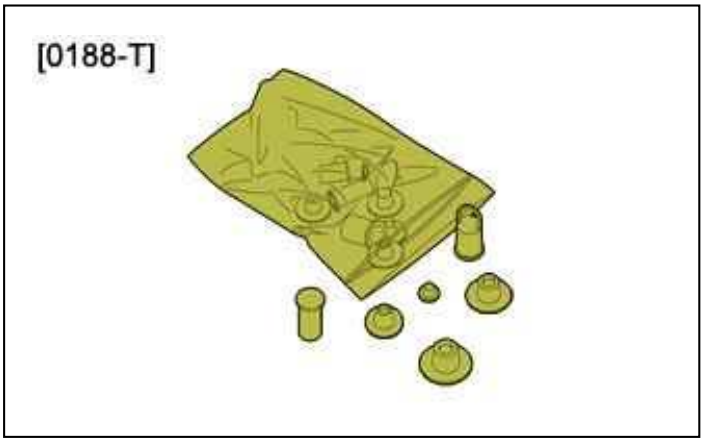 Figure : E5AB06IT	[0188-T]	plugs kit
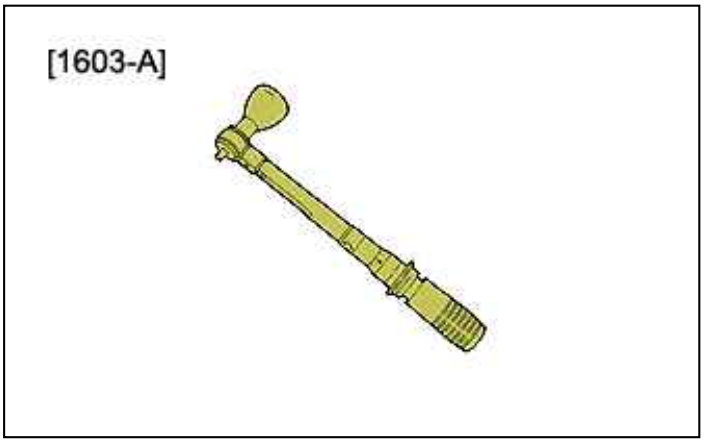 Figure : E5AG07KT	[1603-A]	Torque wrench
	[1603-E]	Extension

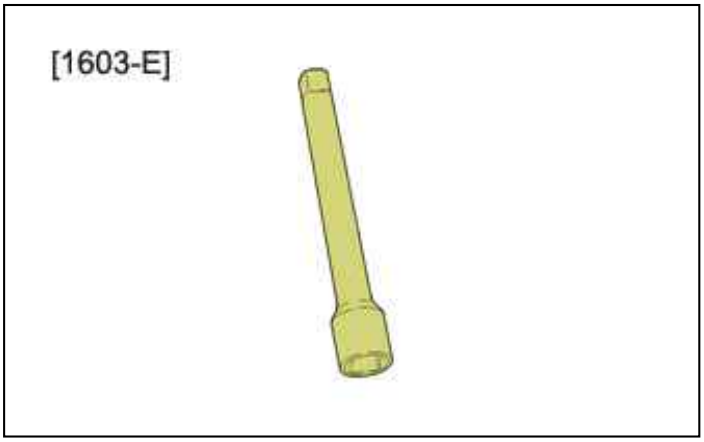 Figure : E5AG07XT		
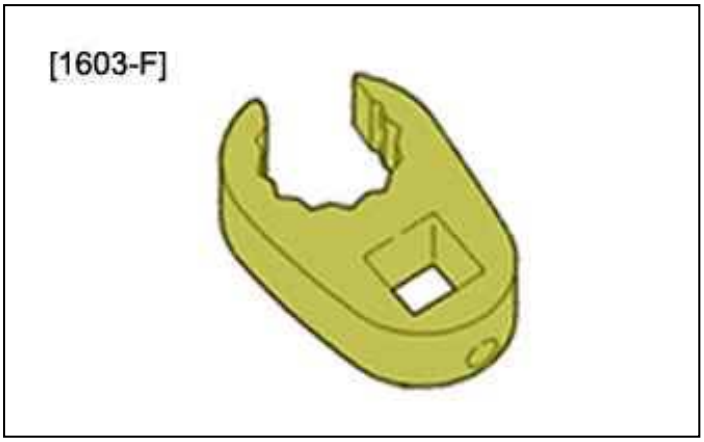 Figure : E5AG07LT	[1603-F]	pipe spanner
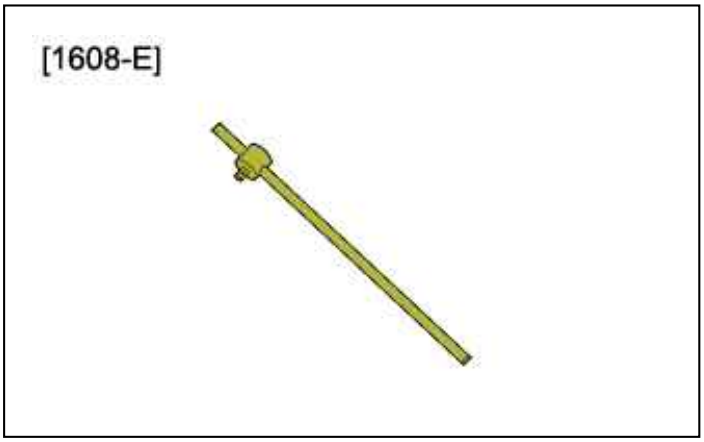 Figure : E5AB0C9T	[1608-E]	T piece extension
	[1608-C]	Adaptor for tightening diesel injector

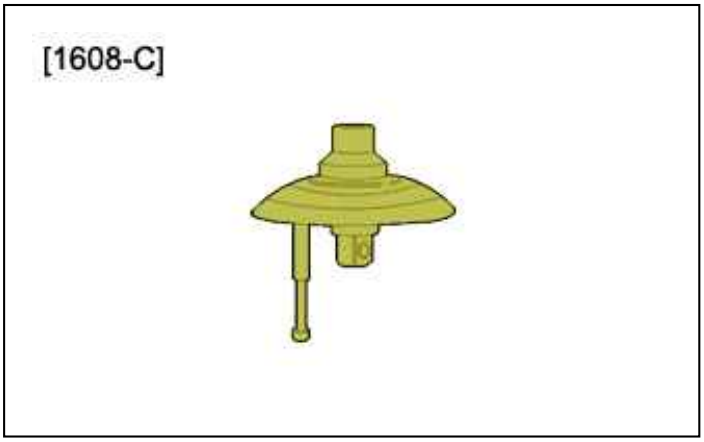

Figure : E5AB0CBT

2. Removing

Disconnect the battery.

Remove :

- The front upper bumper (If the vehicle has the air conditioning function)
- The front crossmember (Upper) (If the vehicle has the air conditioning function)
- The engine style cover

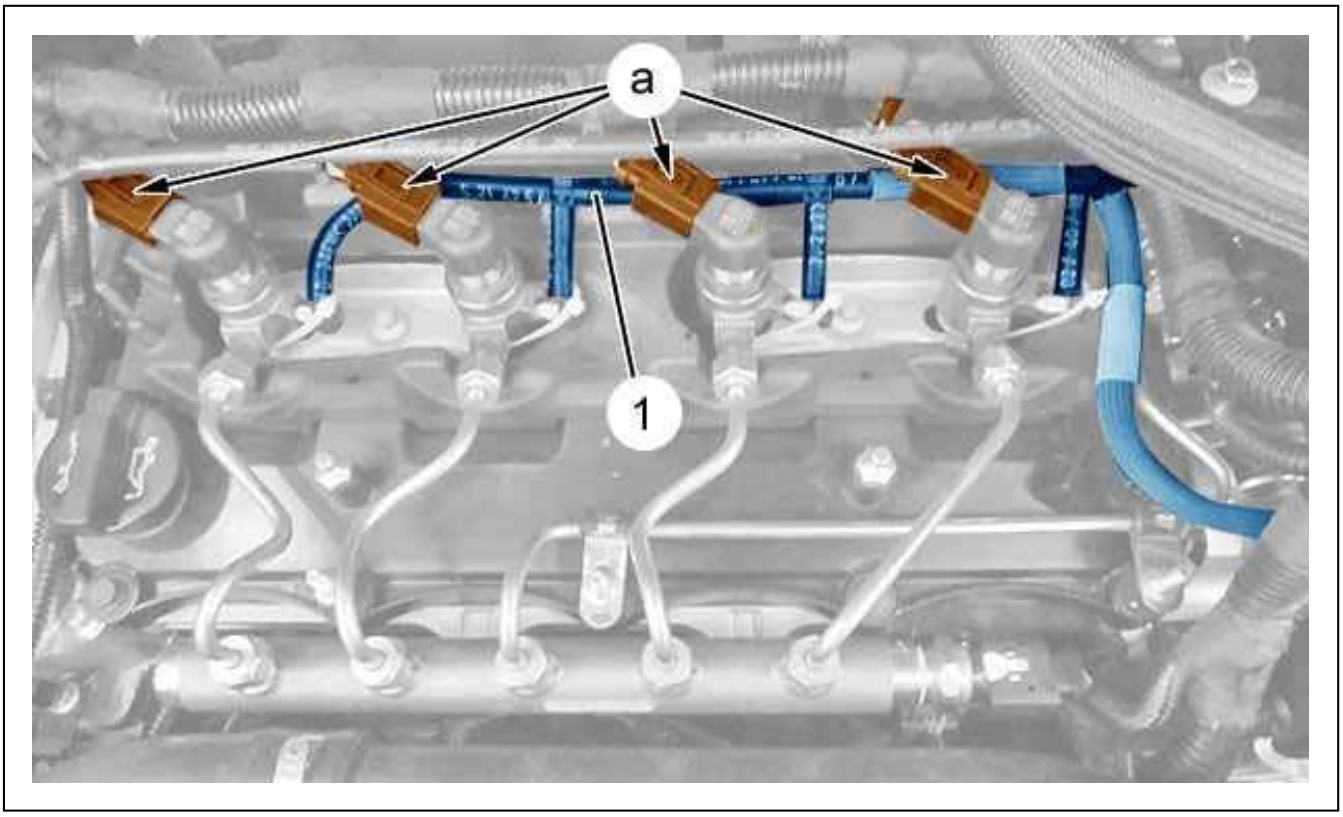

Figure : B1HG3DZD

Remove :

- The fuel return pipe clips (1)
- The fuel return pipe (1)

CAUTION : Blank all the apertures of the fuel high pressure circuit ; Using tool [0188-T].

Disconnect the connectors (at "a").
Remove the harness support on the lifting eye.

CAUTION : Clean the high pressure unions before slackening .

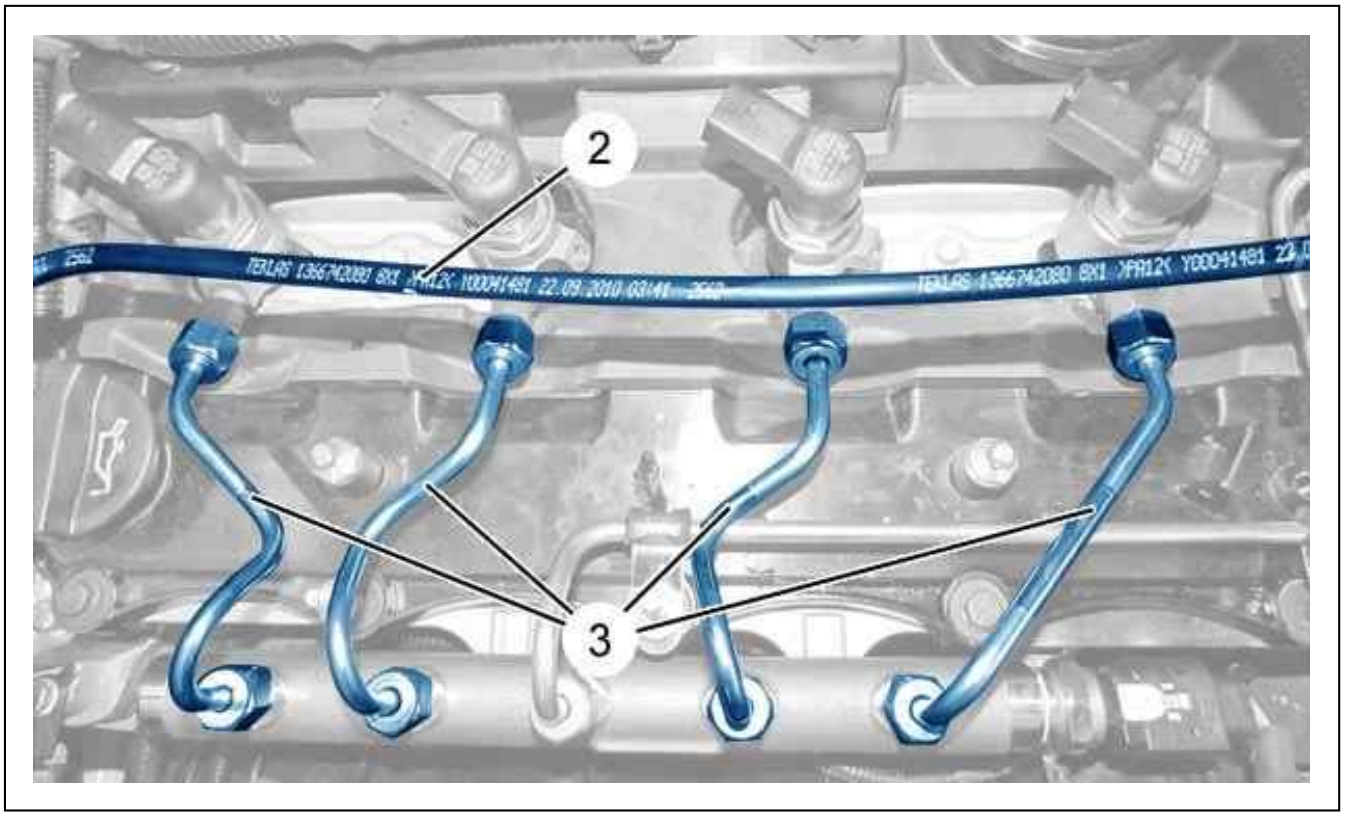

Figure : B1HG3E0D

CAUTION : Plug the unions on the diesel injector and fuel high pressure common injection rail ; Using the tools [0188-T].

Unscrew :

- The unions on the diesel injectors
- The pipe connectors on the fuel high pressure common injection rail

Remove the high pressure supply pipes (3).
Move aside the rigid pipe (2).

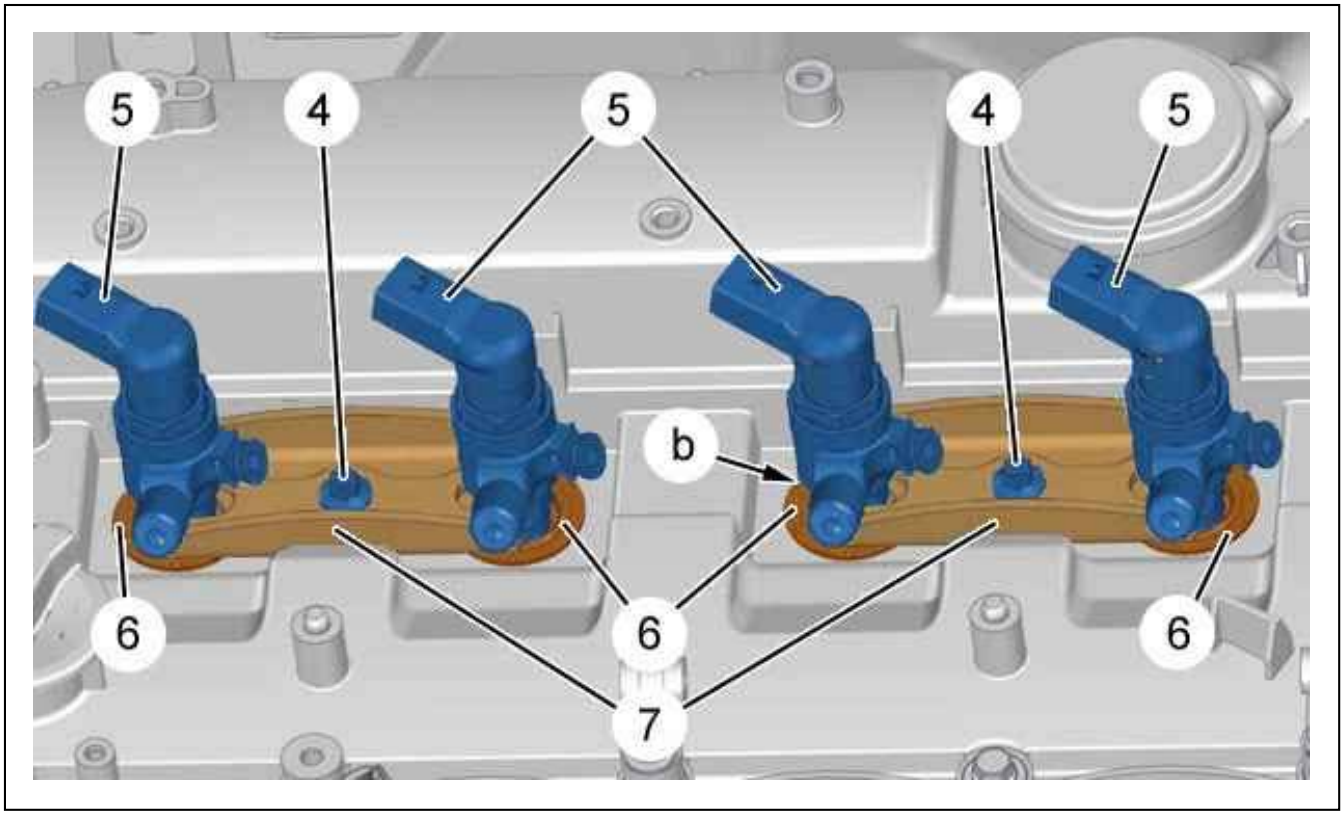

Figure : B1HG3E1D

CAUTION : Mark the location of the diesel injectors (if the injectors are to be reused).

Remove :

- The bolts (4)
- The clamps (7)
- The diesel injectors (5)
- The centring rings (6) on the cylinder head cover
- The copper seals

Plug the diesel injector wells.

N.B. : If it is impossible to remove the diesel injector, remove the stud fixing the clamp (6). Move the diesel injector by lifting it at "b" ; Using a flat spanner (at "b").

CAUTION : In the case of the removal of a single injector : Replace the seal and the ring of the other injector retained by the same flange.

3. Refitting

CAUTION : Adhere to the tightening torques .

CAUTION : Replace the removed diesel injection high pressure pipe(s).

Preparing a diesel injector :

- Fit the centralising bush (6) (new)
- The copper seal (new)

Remove the diesel injector well blanks.

CAUTION : Refit the diesel injectors observing the marks made on removal (if the injectors are to be reused).

Refit :

- The diesel injectors (5)
- The clamps (7)
- The (new) screws (4) (without tightening)

CAUTION : Replace the fuel high pressure pipes.

Fit the new high pressure fuel supply pipes (3) :

- Fit the diesel injector pipes for cylinders 1 and 2
- Tighten the unions on the diesel injectors and on the fuel high pressure common rail by hand to the end of the thread
- Pre-tighten the screw (4) of the flange of the injectors on cylinders 1 and 2 ⓘ ; Using the tools [1603-A], [1603-E], [1603-F]

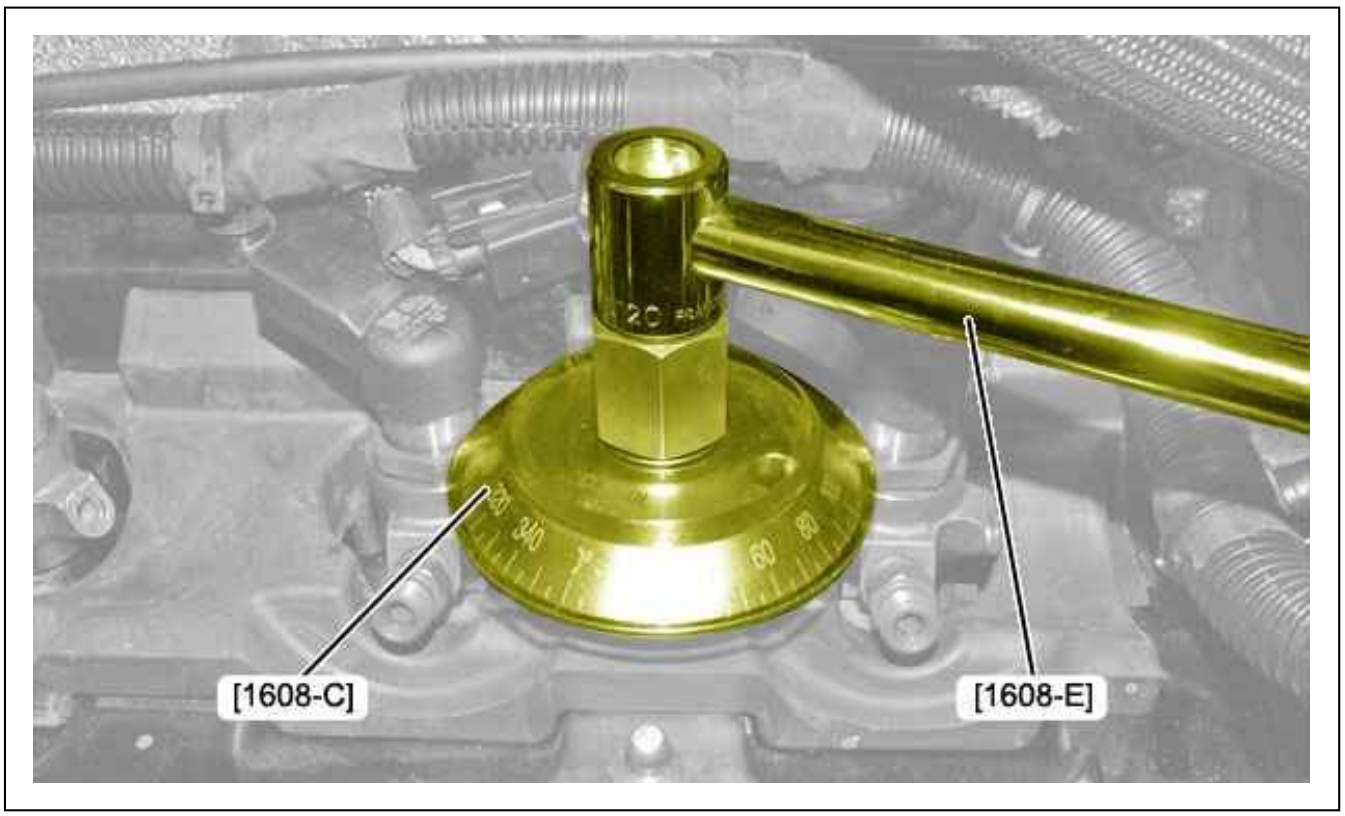

Figure : B1HG3E2D

Tighten :

- The bolts (4) ⓘ ; Using the tools [1608-E], [1608-C]
- The unions on the diesel injectors ; Using the tools [1603-A], [1603-E], [1603-F]
- The pipe connectors on the fuel high pressure common injection rail ; Using the tools [1603-A], [1603-E], [1603-F

Repeat the operation for cylinders 3 and 4.

CAUTION : Replace the clips fixing the fuel return pipe (1) after every removal.

Refit :

- The fuel return pipe (1)

- The new clips (Fuel return pipe (1))
- The harness support on the lifting bracket

Connect the connectors (at "a").
Refit :

- The engine style cover
- The front crossmember (Upper) (If the vehicle has the air conditioning function)
- The front upper bumper (If the vehicle has the air conditioning function)

CAUTION : Perform the operations to be carried out following reconnection of the battery.

Reconnect the battery.

4. Diesel injectors - cylinders pairing (new)

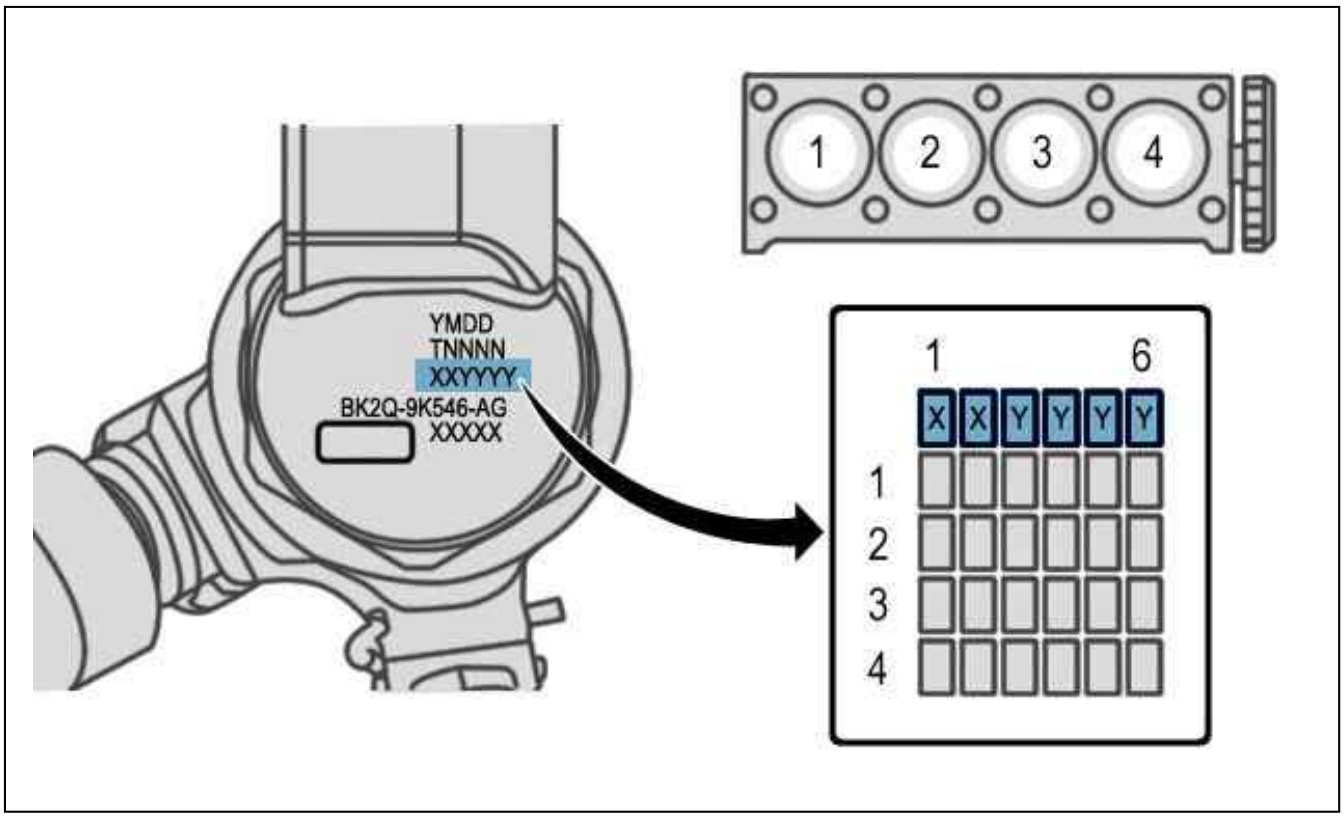

Figure : B1HG3E3D

Allocate the injectors to the cylinders, in accordance with the injectors code ; Using the diagnostic equipment.
Programme the injectors ; Using the diagnostic equipment.

5. Bleed procedure / Checking for leaks

CAUTION : It is necessary to perform the "replacement of the metering pump" procedure in the RP (Replacemen Parts) menu ; Using the diagnostic tool.

CAUTION : Spray the leak detector product on the fuel high pressure common rail.

Allow the product to dry.
Switch on the ignition 10 times in succession over a period of 5 seconds, without starting the engine, this to prime the

fuel circuit.
Prime the vaporiser circuit ; Using the diagnostic tool.
Initialise the fuel high pressure pump ; Using the diagnostic equipment.
Start the engine.
Check the absence of leaks.
Carry out a road test.
Check the absence of leaks.

REMOVING - REFITTING : ENGINE SPEED SENSOR

ESSENTIAL : Observe the safety and cleanliness recommendations .

1. Removing

Disconnect the battery.

CAUTION : Before starting any operation close to the exhaust line, wait the latter to cool down.

CAUTION : Removing the engine speed sensor always necessitates replacing it with a new sensor (Pad for adjusting the air gap, single use only).

Remove :

- The air filter housing
- The turbocharger air inlet duct

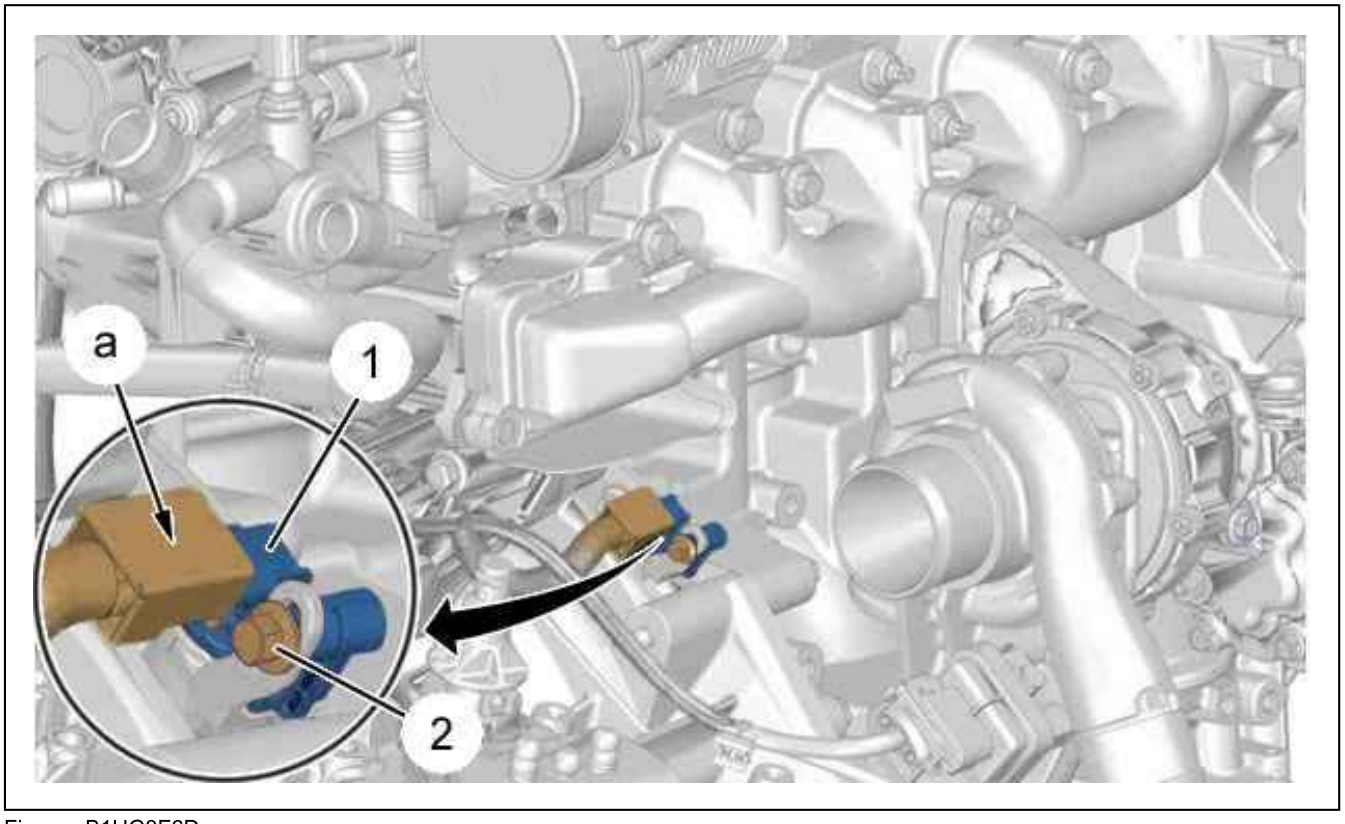

Figure : B1HG3F6D

Disconnect the connector (at "a").
Remove :

- The (2) bolt
- The engine speed sensor (1)

2. Refitting

CAUTION : Adhere to the tightening torques .

CAUTION : Position the end of the engine speed sensor (1) (the adjusting pad) on one of the teeth of the flywheel, no between two teeth.

Refit :

- The engine speed sensor (1)
- The bolt (2)

Connect the connector (at "a").
Refit :

- The turbocharger air inlet duct
- The air filter housing

CAUTION : Perform the operations to be carried out following reconnection of the battery.

Reconnect the battery.

REMOVING - REFITTING : ENGINE SPEED SENSOR

ESSENTIAL : Observe the safety and cleanliness recommendations .

1. Removing

Disconnect the battery.

CAUTION : Before starting any operation close to the exhaust line, wait the latter to cool down.

CAUTION : Removing the engine speed sensor always necessitates replacing it with a new sensor (Pad for adjusting the air gap, single use only).

Remove :

- The air filter housing
- The turbocharger air inlet duct

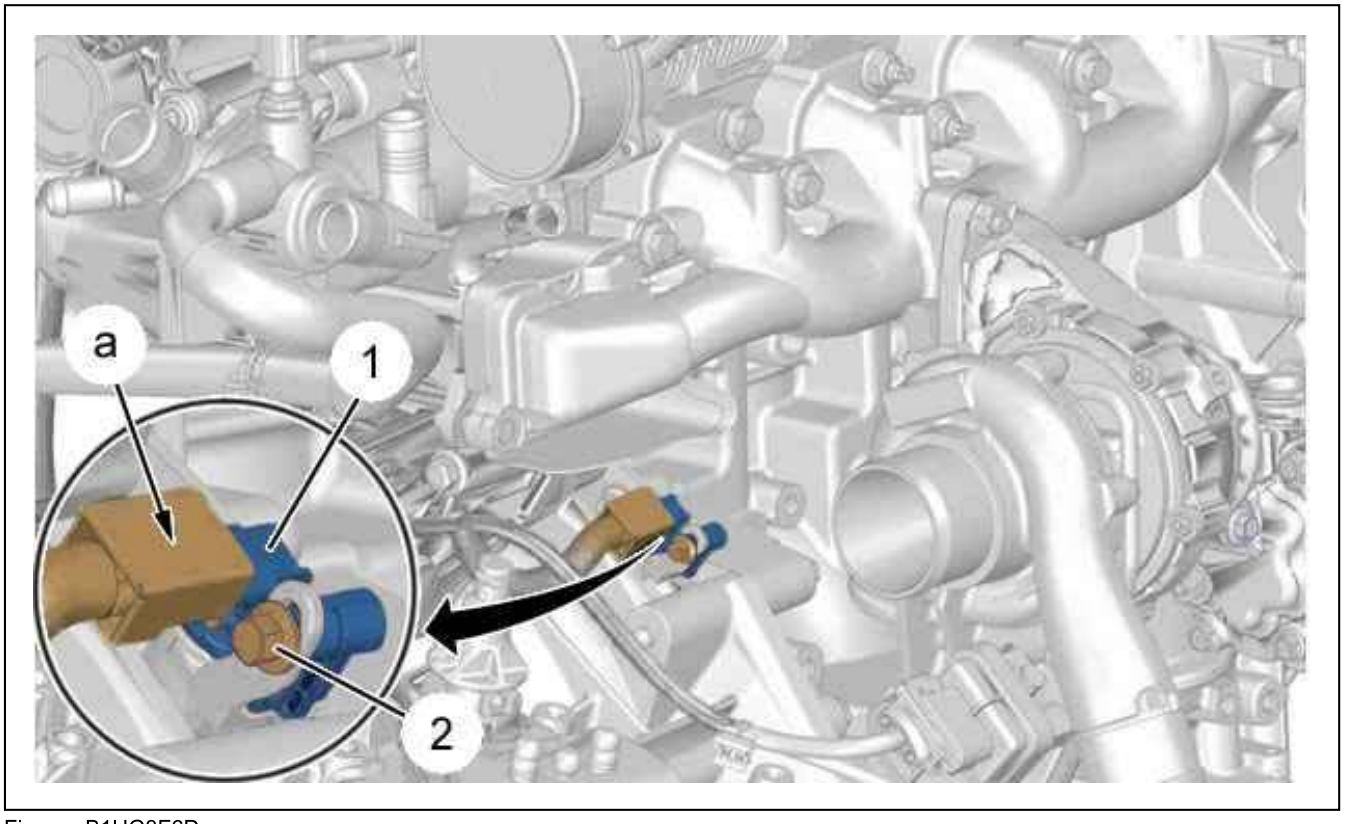

Figure : B1HG3F6D

Disconnect the connector (at "a").
Remove :

- The (2) bolt
- The engine speed sensor (1)

2. Refitting

CAUTION : Adhere to the tightening torques .

CAUTION : Position the end of the engine speed sensor (1) (the adjusting pad) on one of the teeth of the flywheel, no between two teeth.

Refit :

- The engine speed sensor (1)
- The bolt (2)

Connect the connector (at "a").
Refit :

- The turbocharger air inlet duct
- The air filter housing

CAUTION : Perform the operations to be carried out following reconnection of the battery.

Reconnect the battery.

REMOVING - REFITTING : CYLINDER REFERENCE SENSOR

ESSENTIAL : Observe the safety and cleanliness recommendations .

1. Removing

Disconnect the battery negative terminal.
Remove :

- Scuttle closing panel (vehicle equipped with air conditioning)
- The engine style cover

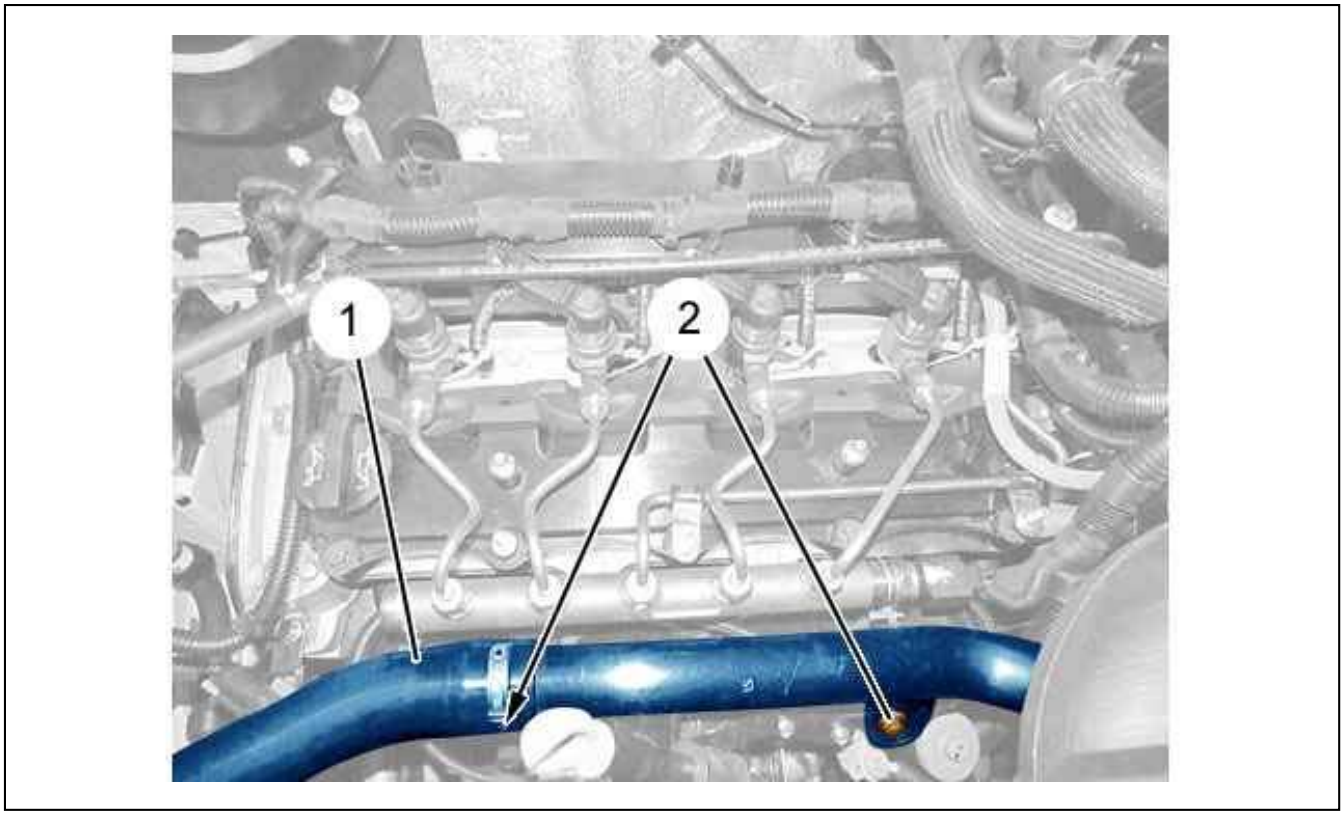

Figure : B1HG3H7D

Remove the 2 bolts (2).
Release : The cooling radiator inlet pipe (1).

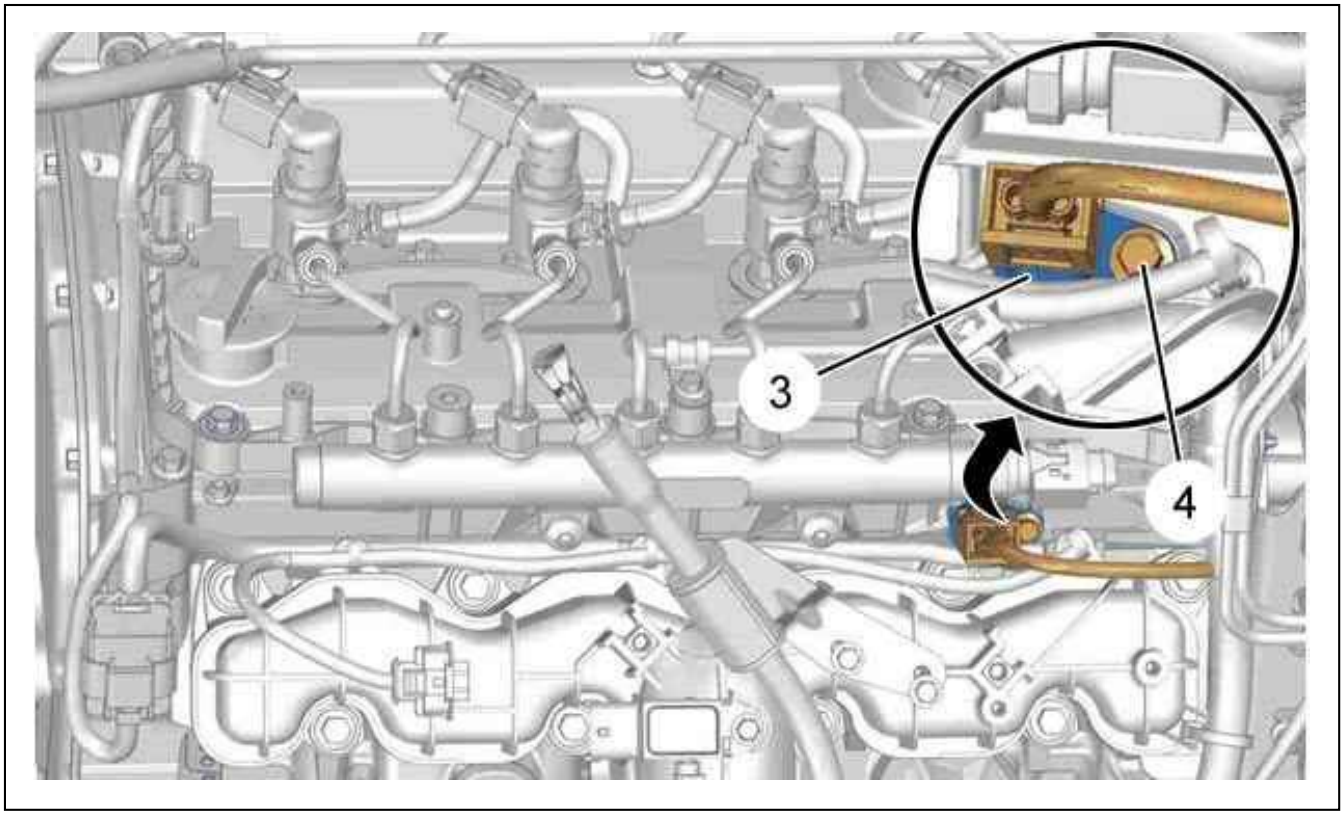

Figure : B1HG3H8D

Remove :

- The bolt (4)
- The cylinder reference sensor (3)

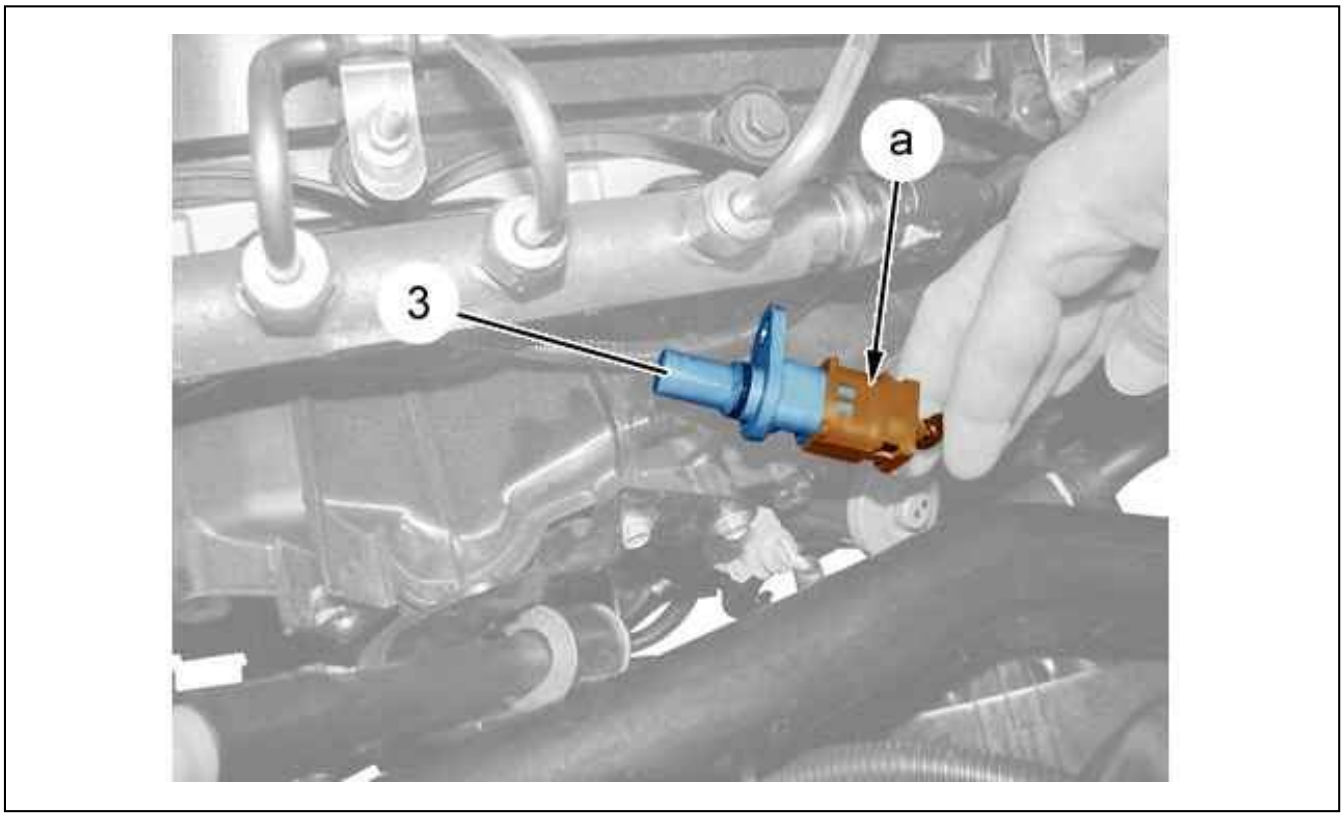

Figure : B1HG3H9D

Disconnect connector of the cylinder (3) reference sensor (at "a").

2. Refitting

CAUTION : Adhere to the tightening torques .

Connect The connector of the cylinder reference sensor(as "a").
Refit :

- The cylinder reference sensor (3)
- The bolt (4)
- The cooling radiator inlet pipe (1)
- The 2 bolts (2)
- The engine style cover
- The scuttle closing panel (vehicle equipped with air conditioning)

CAUTION : Perform the operations to be carried out following reconnection of the battery.

Reconnect the battery negative terminal.

REMOVING - REFITTING : TURBOCHARGER

ESSENTIAL : Observe the safety and cleanliness recommendations .

1. Removing

ESSENTIAL : Respect the safety and cleanliness recommendations that are specific to high pressure diesel injection (HDi) engines .

CAUTION : Do not separate the pressure regulation valve from the turbocharger or slacken its fixings.

Place the vehicle on a 2-post lift.
Disconnect the battery negative terminal.

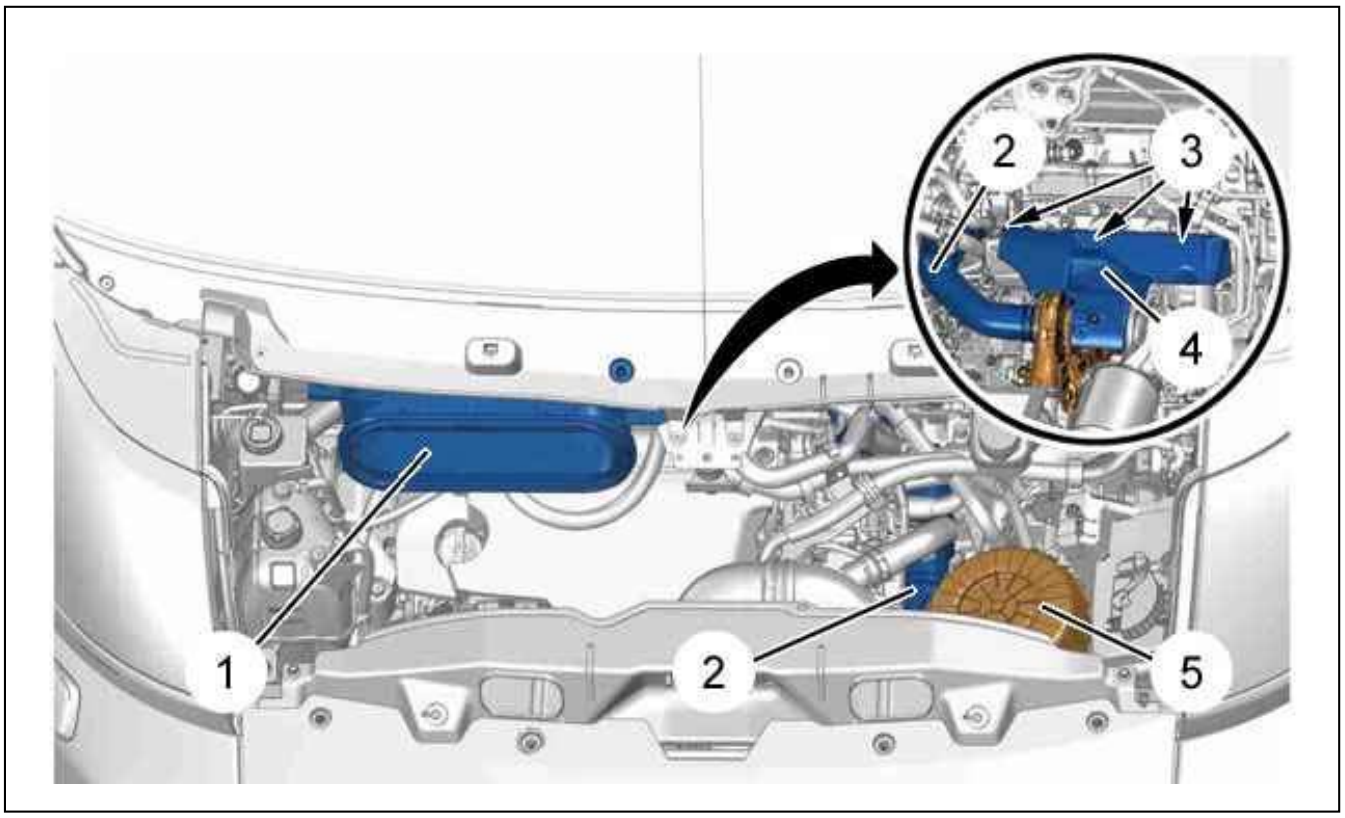

Figure : B1HG3FQD

Remove :

- The scuttle manifold (1)
- The air filter housing (5)
- The turbocharger inlet duct (2)
- The upper bolts (3) of the heat shield (4)
- The heat shield (4)
- The pre-catalytic converter

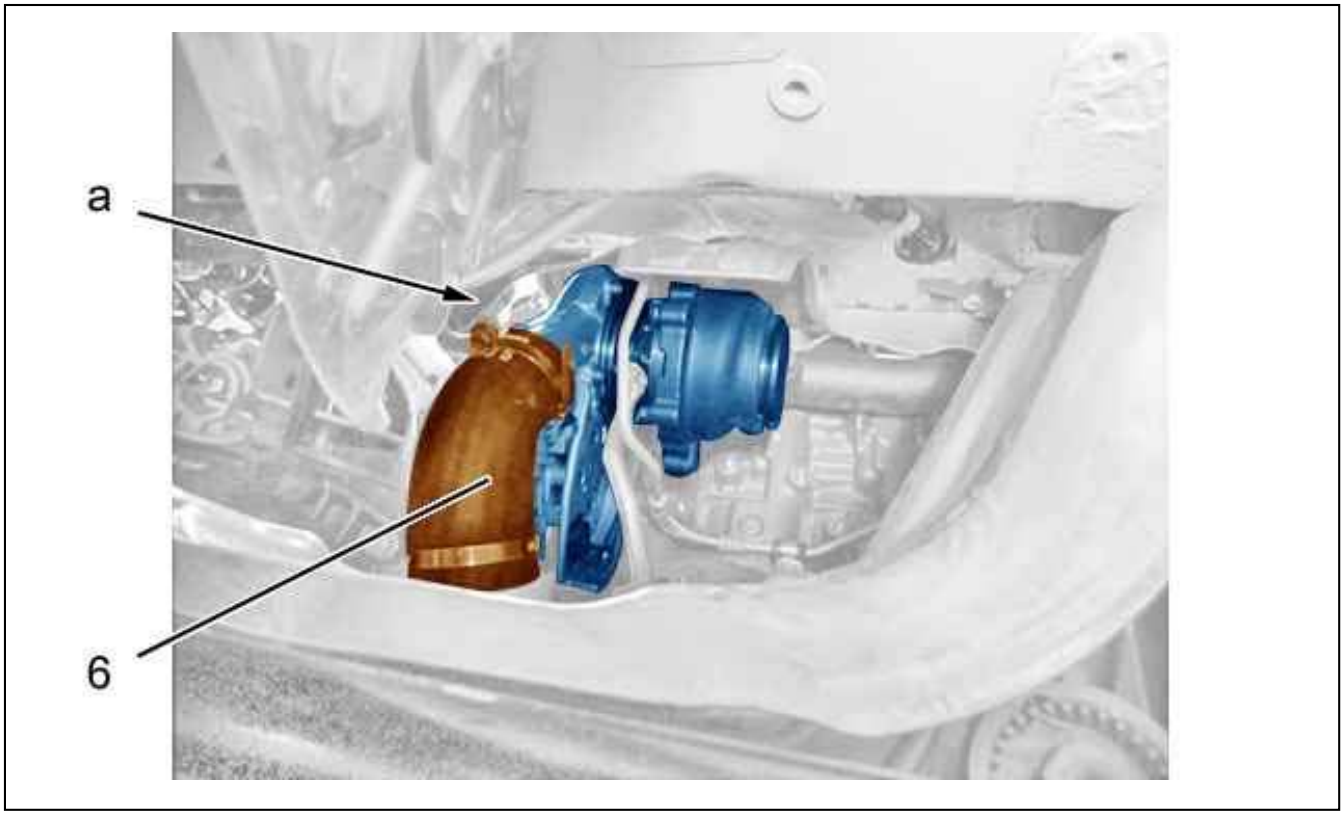

Figure : B1HG3FRD

Remove : The air outlet pipe (6) of the turbocharger .
Disconnect the connector (at "a").

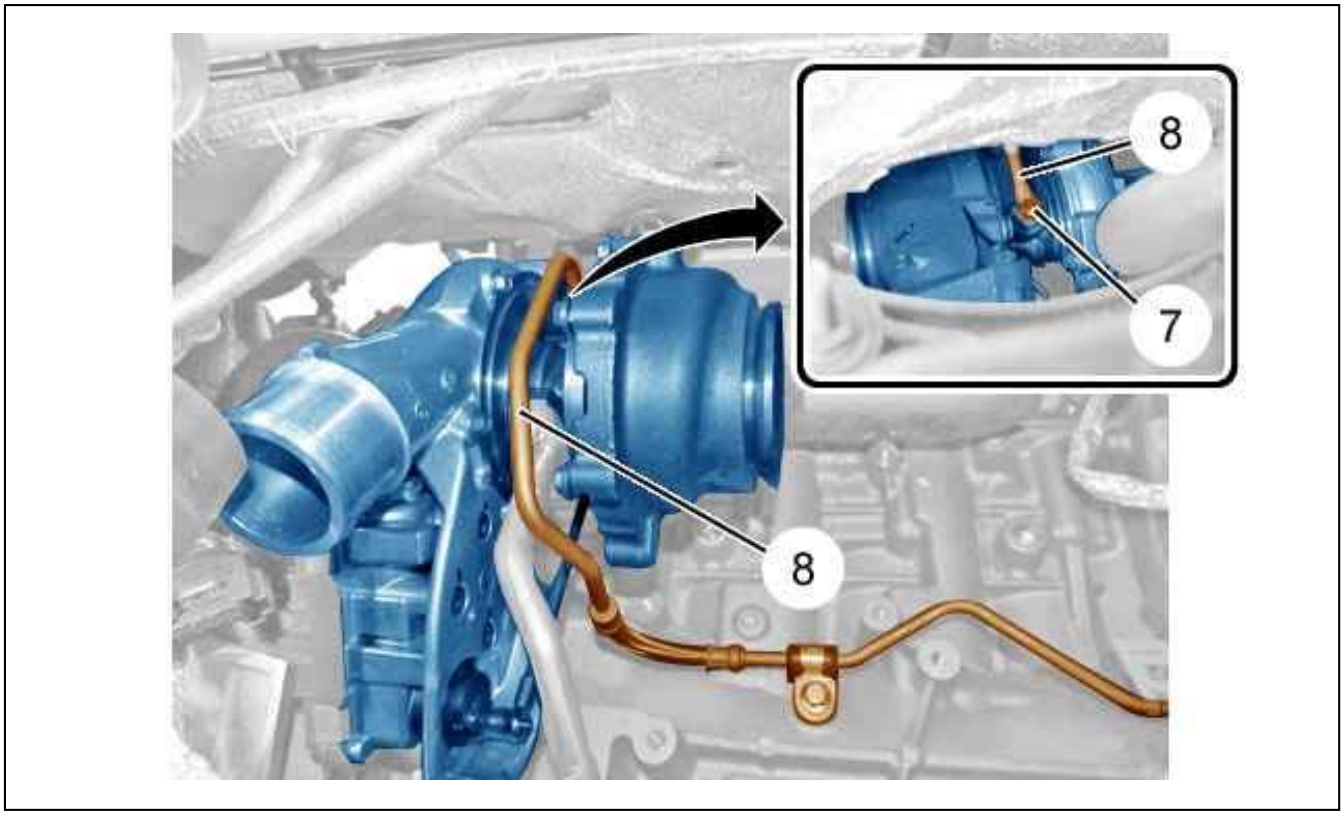

Figure : B1HG3FSD

From above the vehicle :

- Uncouple : The turbocharger oil supply pipe (8) bolt (7) (On the turbocharger)
- Release : The turbocharger oil supply pipe (8)

CAUTION : Blank the lubrication and oil return ducts on the dual turbocharger and the engine.

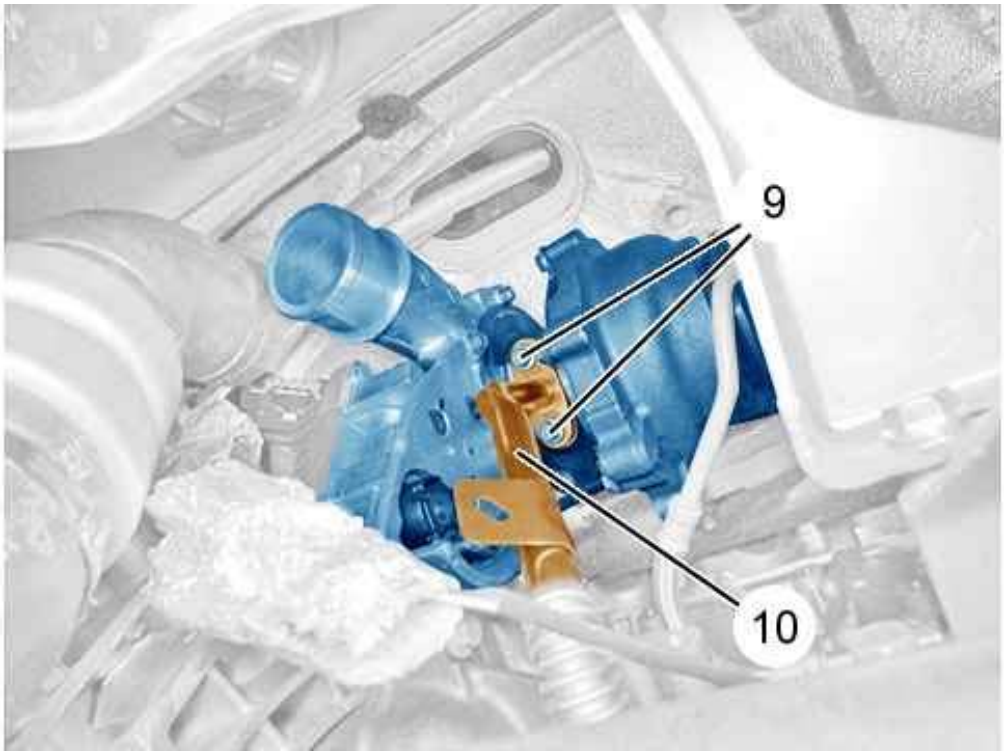

Figure : B1HG3FTD

From below the vehicle :

- Uncouple : The turbocharger oil return pipe (10) bolts (9) (On the turbocharger)
- Release : The turbocharger oil return pipe (10)

CAUTION : Blank the lubrication and oil return ducts on the dual turbocharger and the engine.

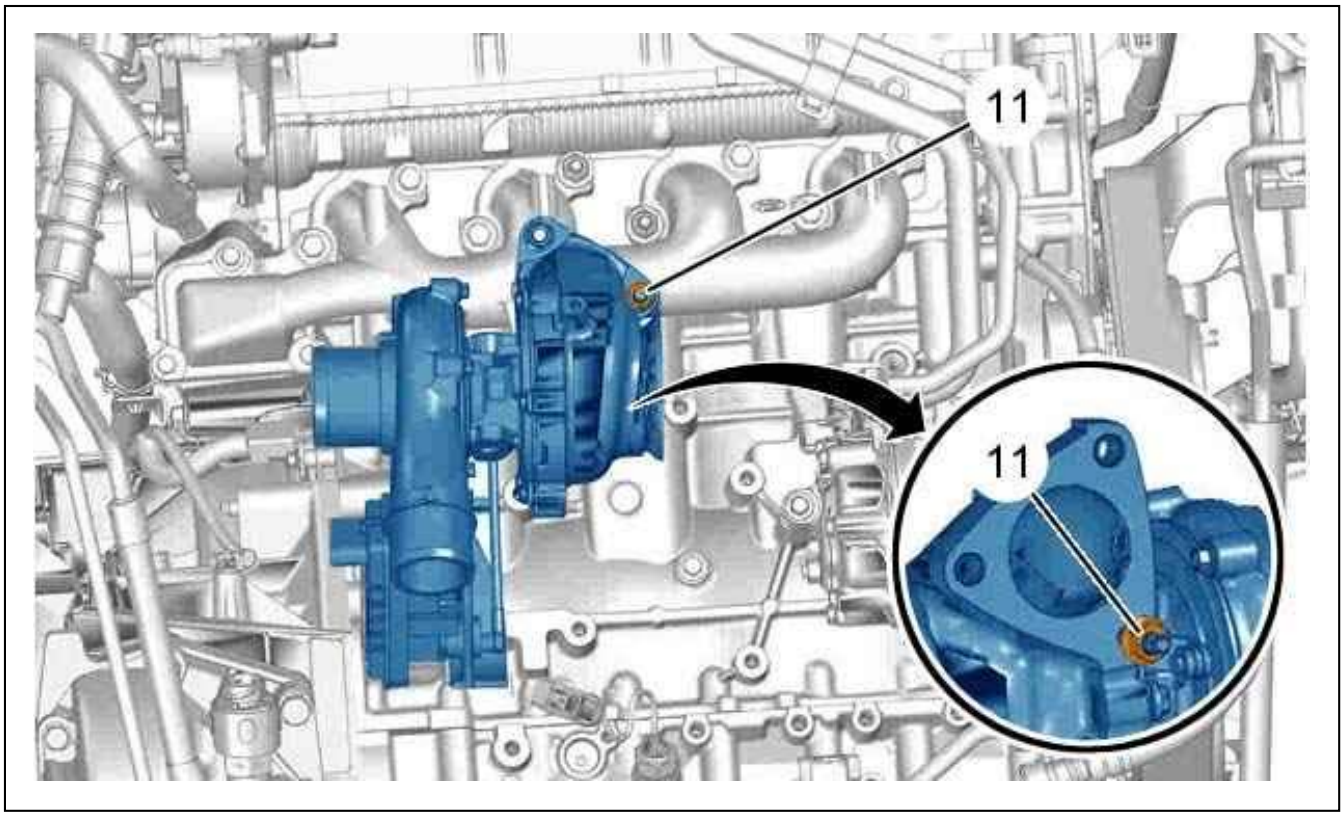

Figure : B1HG3FUD

From below the vehicle : Remove the turbocharger lower nuts (11).

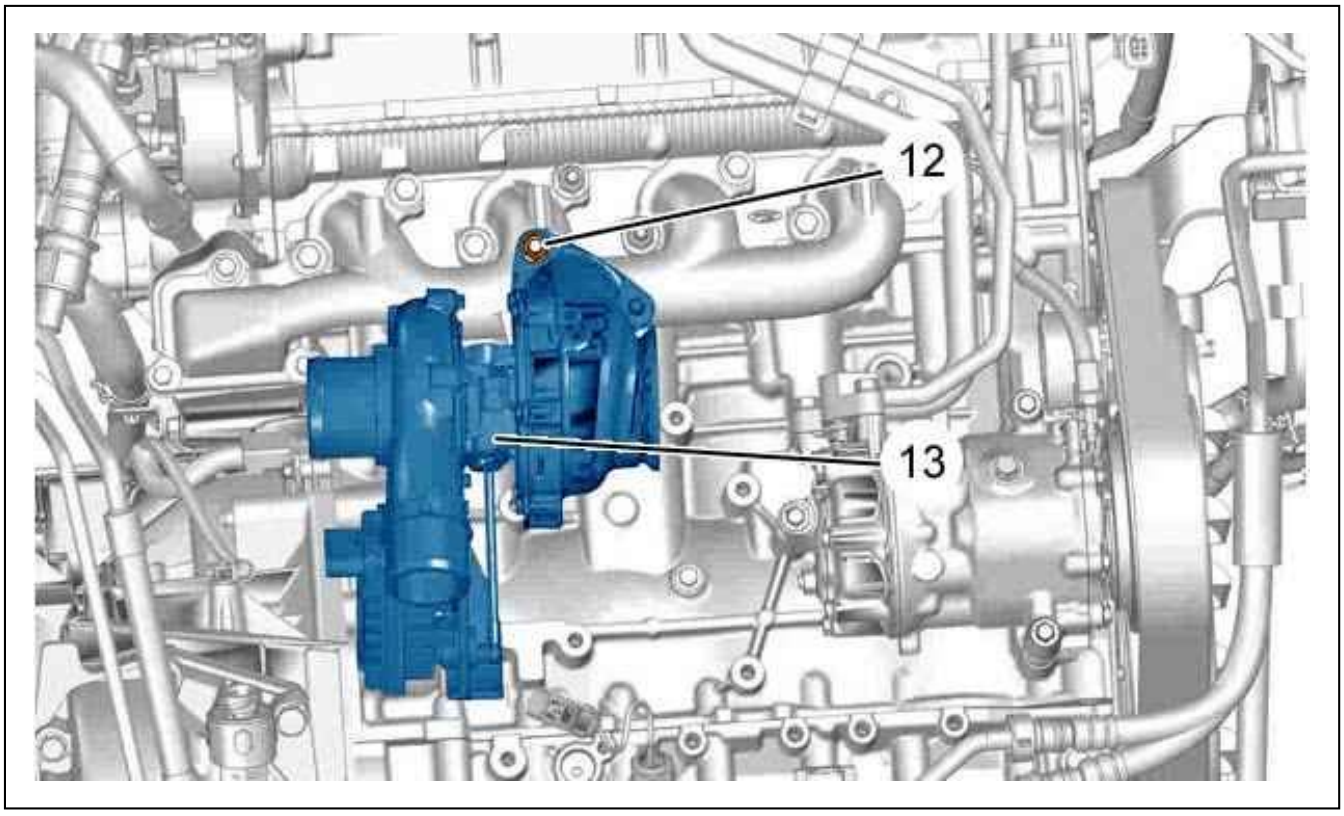

Figure : B1HG3FVD

From above the vehicle.
Remove :

- The upper nut (12)
- The turbocharger (13)

Extract the turbocharger (13) via the pre-catalyst location.

2. Refitting

CAUTION : If the turbocharger mounting studs are removed, refit them coated with LOCTITE FRENETANCH.

CAUTION : Adhere to the tightening torques .

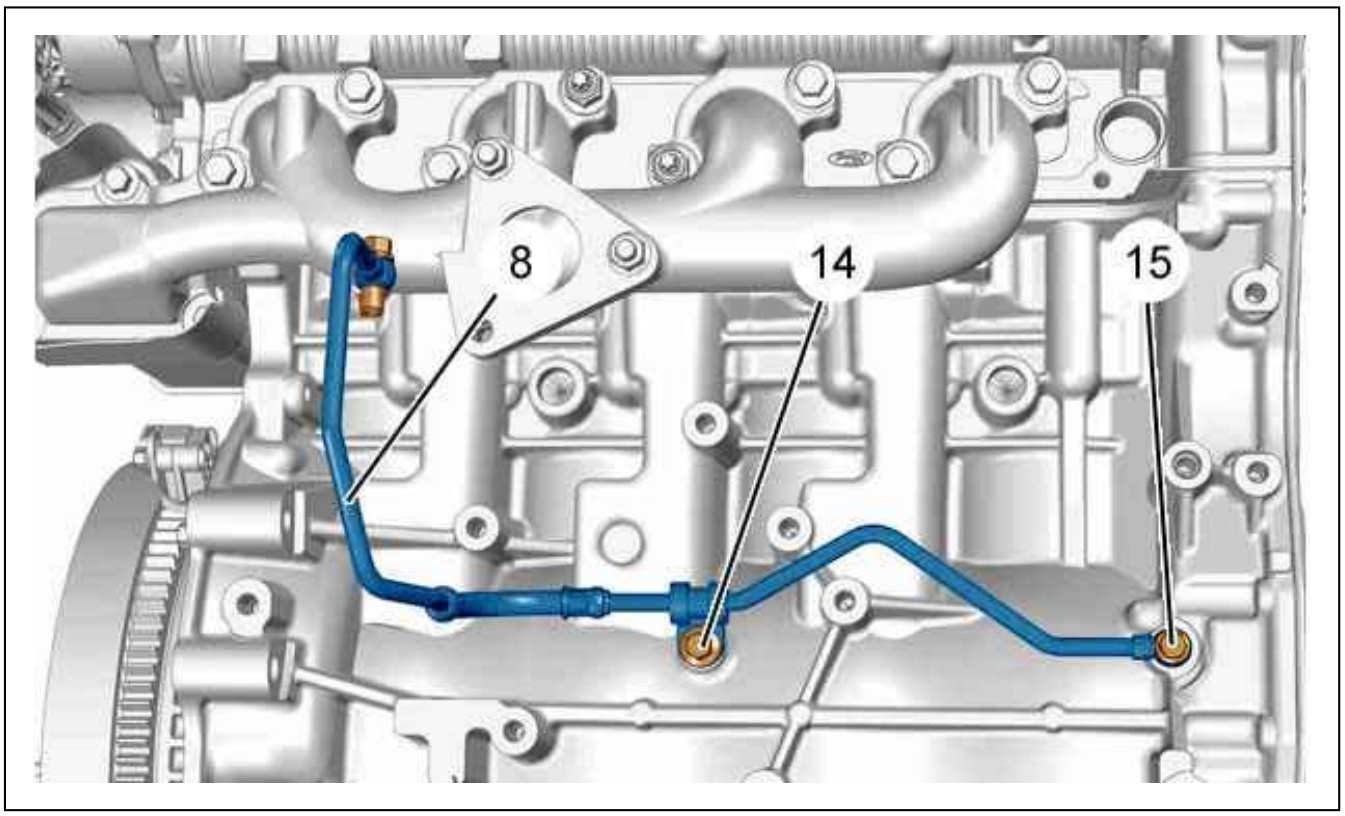

Figure : B1HG3FWD

CAUTION : Always replace the lubrication pipe (8) fitted with its seals.

Replace : The turbocharger oil supply pipe (8) (13).
Tighten the hollow bolt (15) until it is touching.
Tighten bolt (14) until it is touching.
Fit the turbocharger (13).
Refit :

- The upper nut (12)
- The turbocharger (11) lower nuts (13)
- The turbocharger oil return pipe (10) (13)
- The turbocharger oil return pipe (10) bolts (9) (13)
- The turbocharger oil supply pipe (8) (13)
- The turbocharger oil supply pipe (8) bolt (7) (13)

Reconnect the connector (at "a").

CAUTION : Check that there are no foreign bodies in the air ducts.

Refit : The air outlet pipe (6) of the turbocharger (13).
Refit :

- The pre-catalytic converter
- The heat shield (4)
- The upper bolts (3) of the heat shield (4)
- The turbocharger inlet duct (2)
- The air filter housing (5)
- The scuttle manifold (1)

CAUTION : Perform the operations to be carried out following reconnection of the battery.

Reconnect the battery negative terminal.

3. Precautions to be taken before starting the vehicle

CAUTION : Do not start the vehicle without having carried out the following operations.

Disconnect the camshaft position sensor connector.
Turn the engine over with the starter motor for 15 seconds.
Connect the camshaft position sensor connector.
Let the engine run at idle for 30 seconds before increasing the load.
After switching on, check the sealing of the various unions.
Clear the faults in the memory ; Using a diagnostic tool.

REMOVING - REFITTING : AIR INLET MANIFOLD

ESSENTIAL : Observe the safety and cleanliness recommendations .

1. Removing

Disconnect the battery.

Remove the engine compartment front panel crossmember .

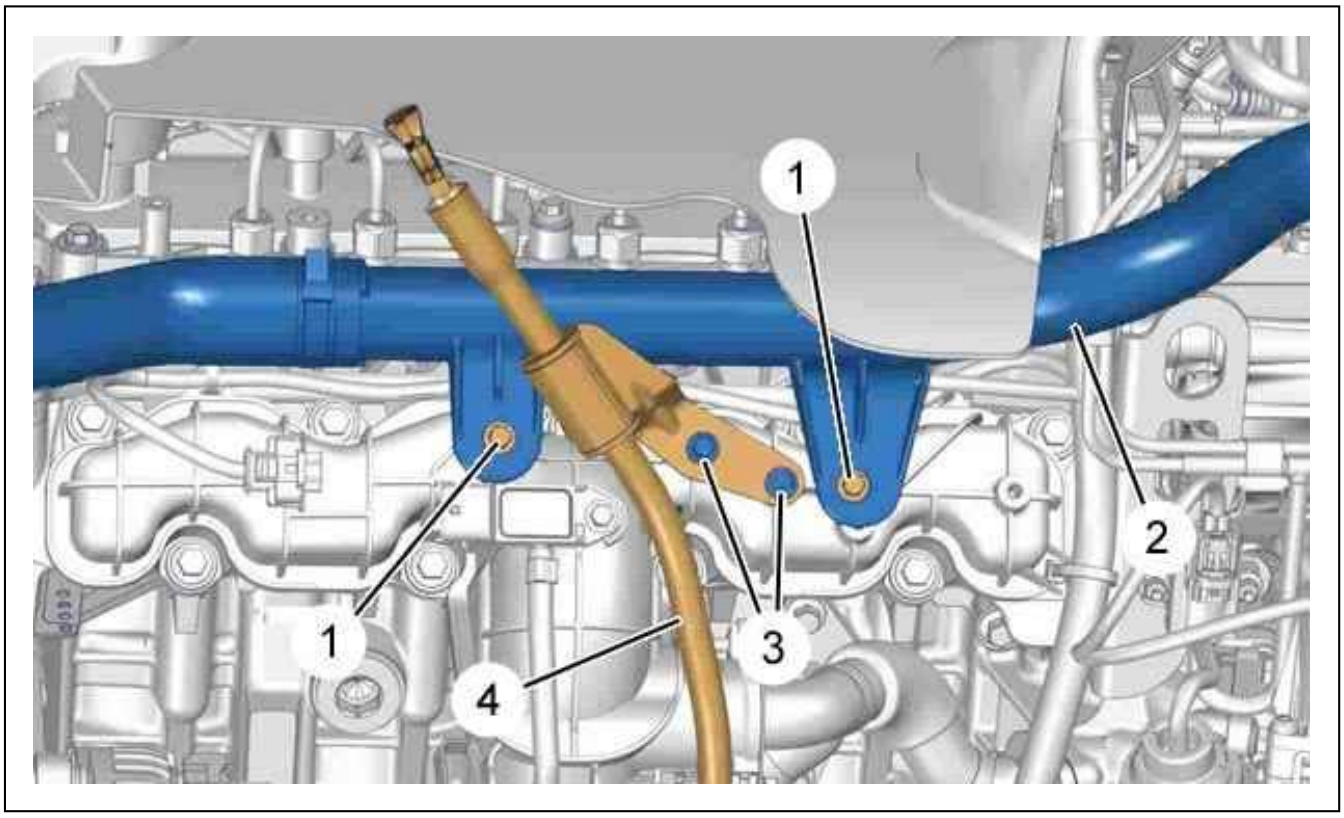

Figure : B1HG3FXD

Remove :

- The bolts (1)
- The bolts (3)

Release :

- The tube (2)
- The dipstick (4)

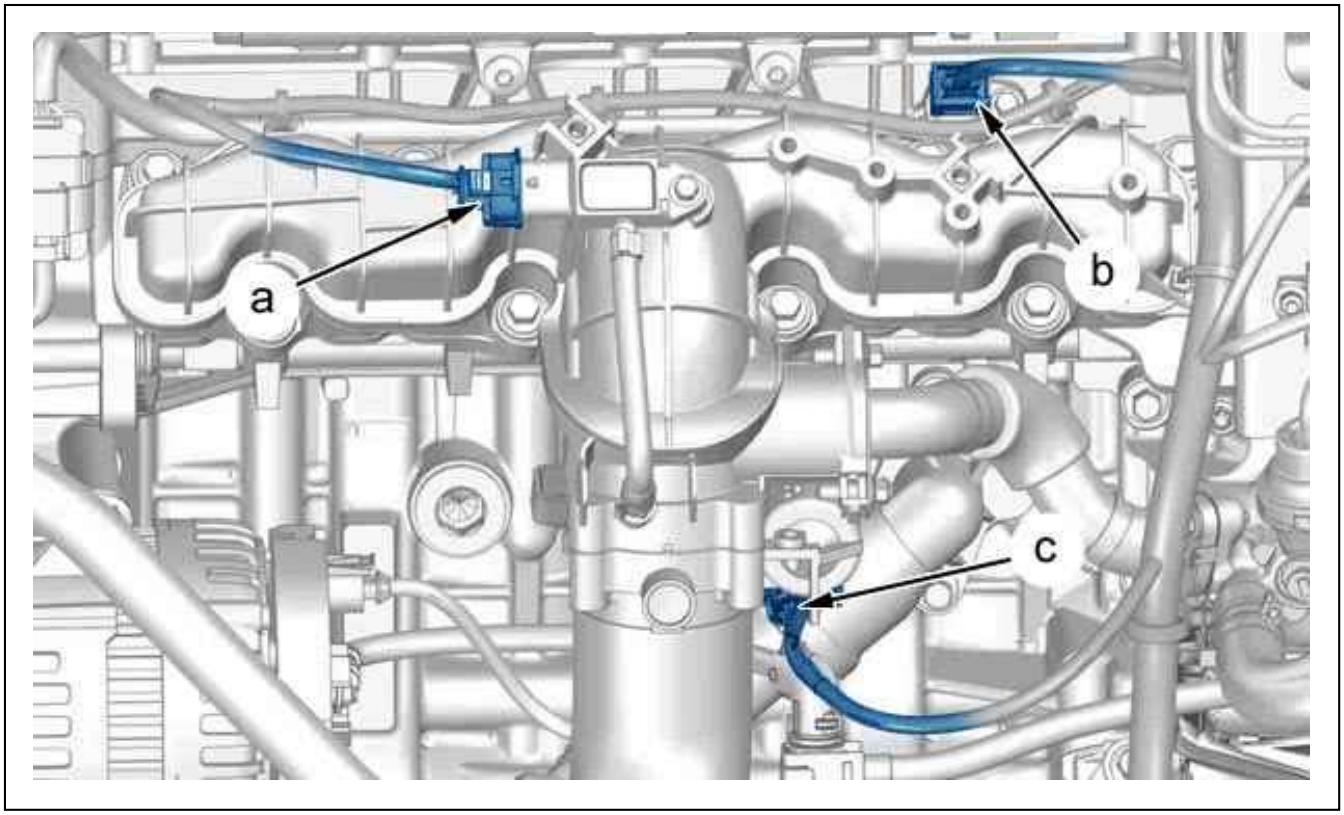

Figure : B1HG3FYD

Disconnect the connectors (at "a", "b", "c").
Release : The electrical harness attaching to the air inlet manifold .

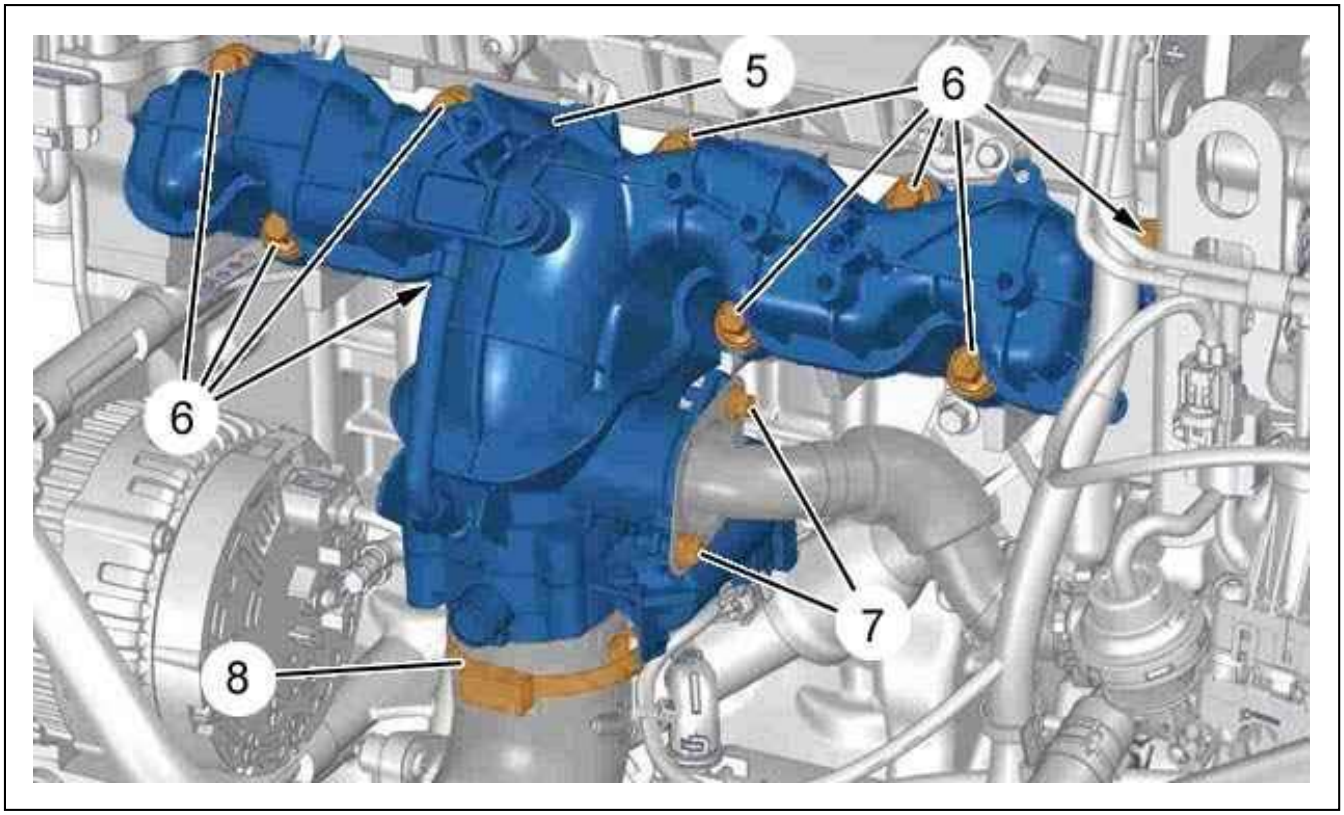

Figure : B1HG3FZD

Remove :

- The bolts (7)
- The bolts (6)
- The clip (8)
- The inlet manifold (5)

2. Refitting

CAUTION : Adhere to the tightening torques .

CAUTION : Always replace seals which have been removed.

Refit :
- The inlet manifold (5)
- The clip (8)
- The bolts (6)
- The bolts (7)

Position : The electrical harness attaching to the air inlet manifold (5).
Connect the connectors (at "a", "b", "c").
Position :
- The dipstick (4)
- The tube (2)

Refit :
- The bolts (3)
- The bolts (1)
- The engine compartment front panel crossmember

CAUTION : Perform the operations to be carried out following reconnection of the battery.

Reconnect the battery.

REMOVING - REFITTING : FUEL TEMPERATURE SENSOR

ESSENTIAL : Observe the safety and cleanliness recommendations .

CAUTION : Before removing any high pressure fuel sensor or actuator, carry out the diagnostics using the specific tools.

1. Tooling

Equipment :

- Leak detector
- Degreasing product (Type SODIMAC)
- Cleaning tray
- Brush
- Vacuum extractor

tool	Reference	Designation
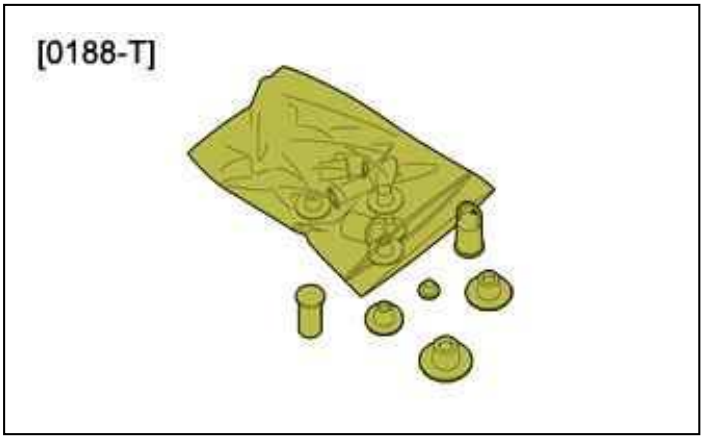 Figure : E5AB06IT	[0188-T]	plugs kit

2. Removing

Disconnect the battery.

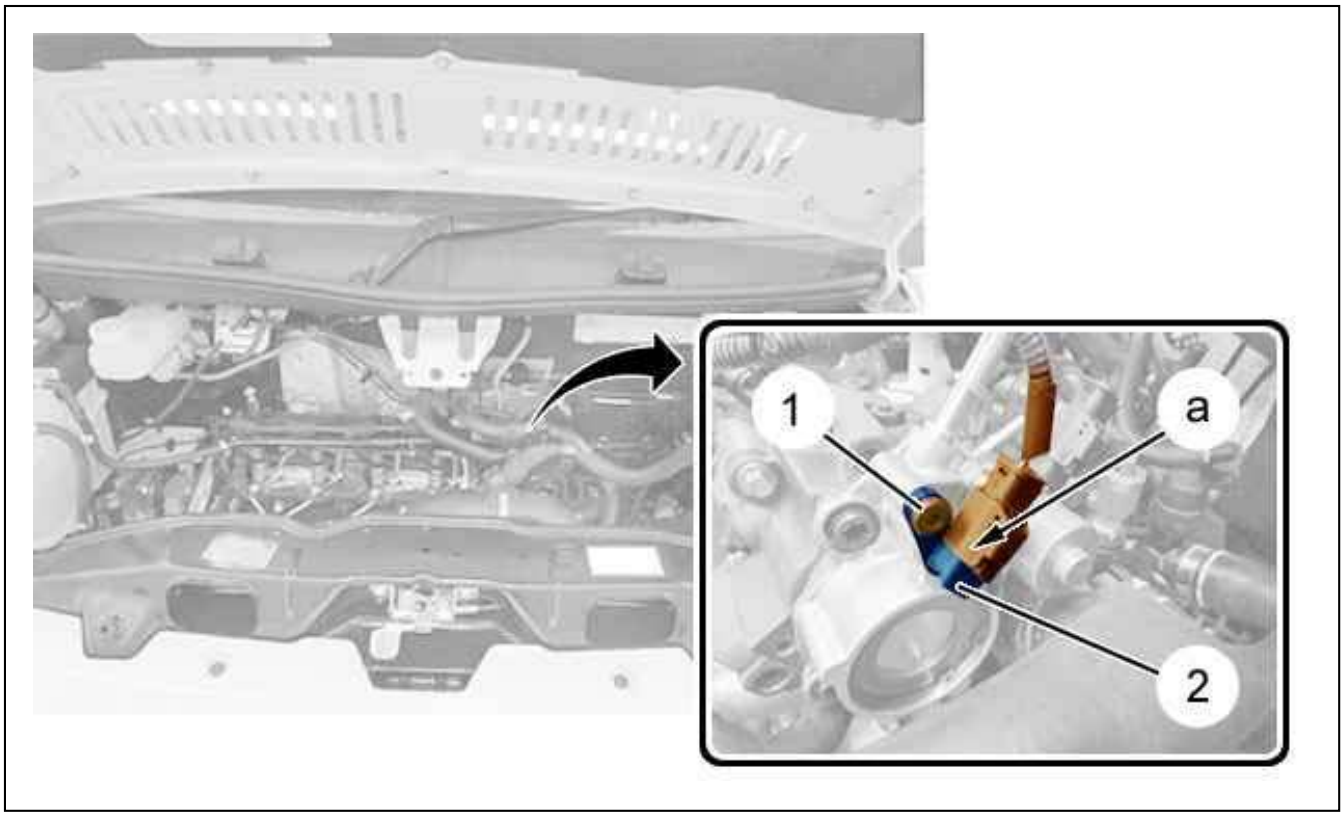

Figure : B1HG3GDD

CAUTION : To prevent any risk of contamination of the fuel circuit, only remove the fuel temperature sensor (2) wher the new component is available.

CAUTION : Protect the surrounding area from any spray of fuel.

Disconnect the connector (at "a").

CAUTION : Block the apertures of the high pressure fuel pump ; Using tool [0188-T].

Remove :

- The (1) bolt
- The fuel temperature sensor (2)

N.B. : When loosening, rotate it several times to break the paint.

CAUTION : Clean and vacuum up the impurities and particles of paint.

3. Refitting

CAUTION : Always replace seals which have been removed (new).

CAUTION : Fit the new fuel temperature sensor immediately, in order to prevent any risk of contaminating the fue circuit.

Lubricate the O-ring seal of the fuel temperature sensor (2) using the product provided in the kit.

CAUTION : Check that the copper seal on the fuel temperature sensor (2) is present and in good condition.

Refit :

- The fuel temperature sensor (2)
- The bolt (1)

Connect the connector (at "a").

CAUTION : Perform the operations to be carried out following reconnection of the battery.

Reconnect the battery.

REMOVING - REFITTING : PRESSURE REGULATOR ON FUEL HIGH PRESSURE PUMP

ESSENTIAL : Observe the safety and cleanliness recommendations .

CAUTION : Before removing any high pressure fuel sensor or actuator, carry out the diagnostics using the specific tools.

1. Tooling

Equipment :

- Leak detector
- Degreasing product (type SODIMAC)
- Cleaning tray
- Brush
- Vacuum extractor
- Diagnostic tool

tool	Reference	Designation
[0188-T] 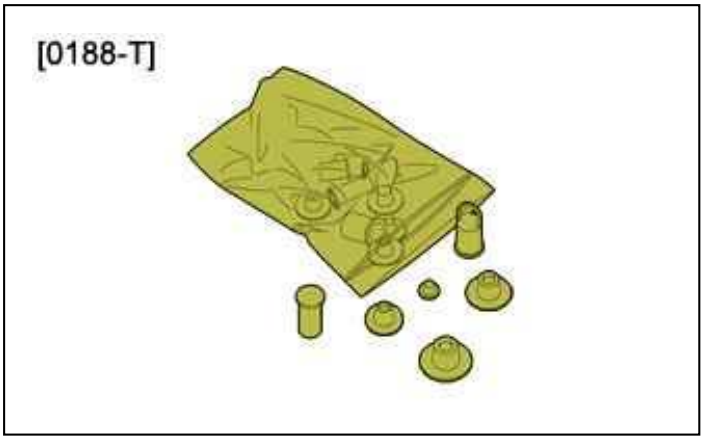 Figure : E5AB06IT	[0188-T]	plugs kit

2. Removing

Disconnect the battery.

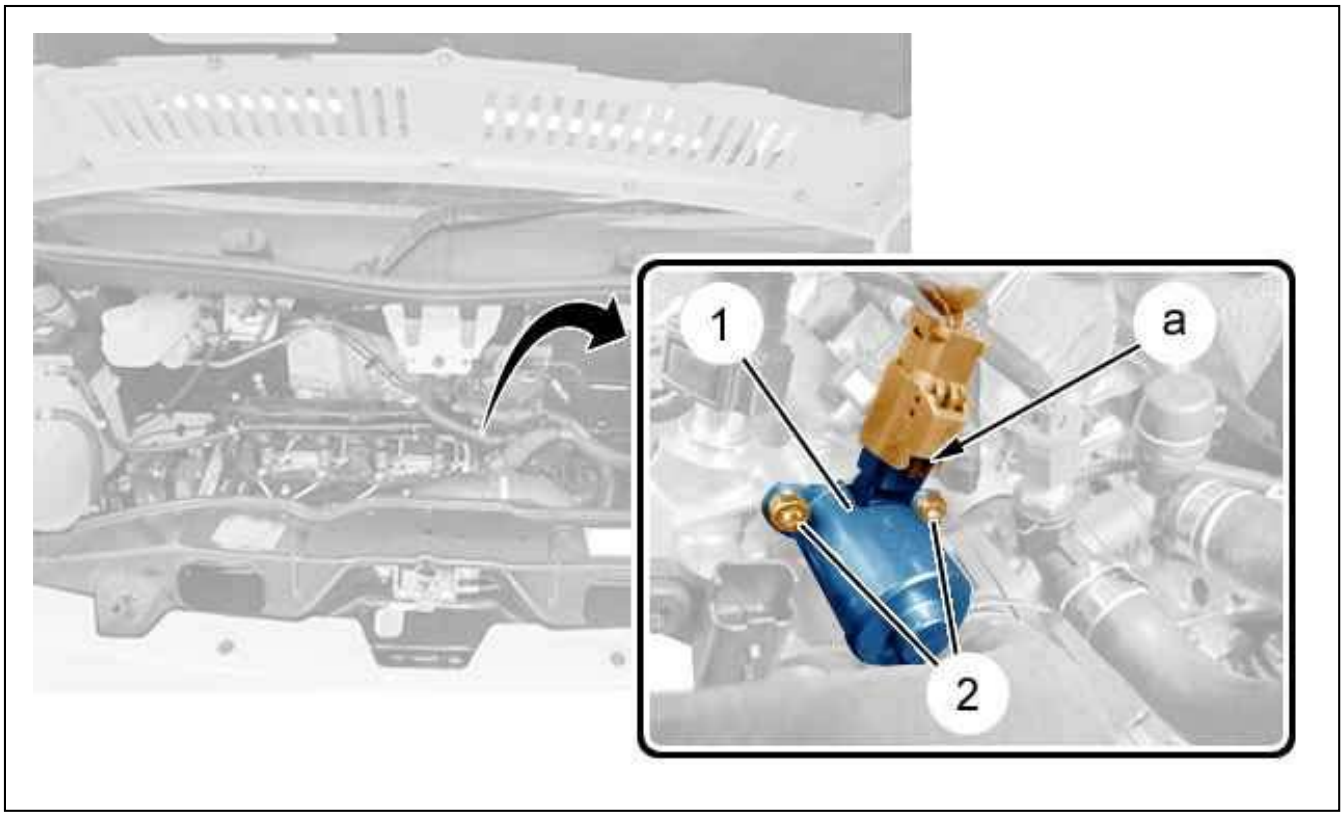

Figure : B1HG3MMD

Disconnect the connector (at "a").

CAUTION : Block the apertures of the high pressure fuel pump ; Using tool [0188-T].

CAUTION : To prevent any risk of contaminating the fuel circuit, only remove the fuel temperature sensor when the new component is available.

CAUTION : Protect the surrounding area from any spray of fuel.

Remove :

- The bolts (2)
- The fuel high pressure regulator (1)

N.B. : When loosening, rotate it several times to break the paint.

CAUTION : Clean and vacuum up the impurities and particles of paint.

3. Refitting

CAUTION : Always replace seals which have been removed (new).

CAUTION : Fit the new fuel temperature sensor immediately, in order to prevent any risk of contaminating the fuel circuit.

Lubricate the O-ring of the fuel temperature sensor with the dispenser supplied in the kit.

CAUTION : Checked the presence and condition of the copper seal on the fuel temperature sensor.

Refit :

- The fuel pressure regulator (1) (With a new seal)
- The bolts (2)

Connect the connector (at "a").

CAUTION : Perform the operations to be carried out following reconnection of the battery.

Reconnect the battery.

4. Learning - Checking for leaks

CAUTION : It is necessary to perform the "replacement of the metering pump" procedure in the RP (Replacemen Parts) menu ; Using the diagnostic tool.

CAUTION : With the aid of a leak detector ARDROX 9D1 BRENT, spray the fuel high pressure regulator (1).

Allow the product to dry.
Remove the protectors under the engine (front).
Prime the vaporiser circuit ; Using the diagnostic tool.
Switch on the ignition 10 times in succession over a period of 5 seconds, without starting the engine, this to prime the fuel circuit.
Start the engine.
Check there are no leaks.
Accelerate up to an engine speed of 4000 rpm.
Check there are no leaks.
Carry out a road test.
Check there are no leaks.
Replace any defective parts (if necessary).

REMOVING - REFITTING : HIGH PRESSURE FUEL PUMP

ESSENTIAL : Observe the safety and cleanliness recommendations .

CAUTION : Before removing any high pressure fuel sensor or actuator, carry out the diagnostics using the specific tools.

1. Tooling

Equipment : leak detector .

tool	Reference	Designation
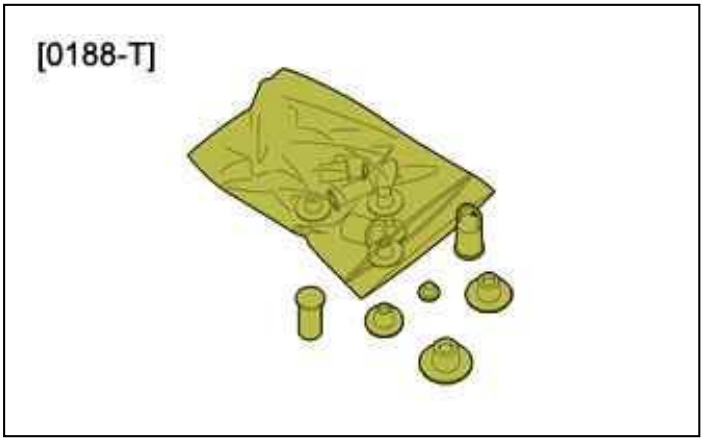 Figure : E5AB06IT	[0188-T]	plugs kit
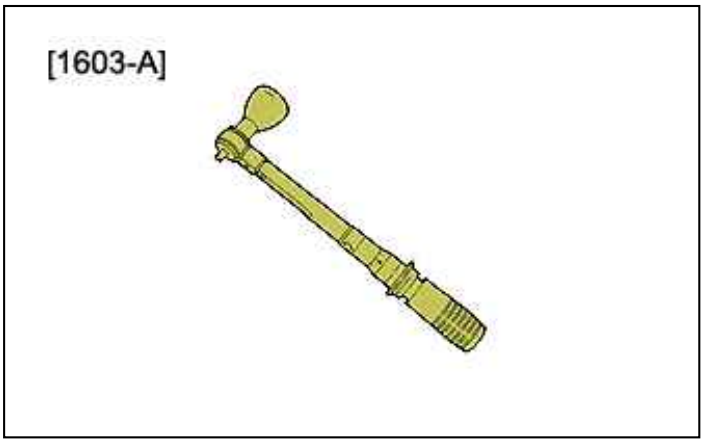 Figure : E5AG07KT	[1603-A]	Torque wrench
	[1603-E]	Extension

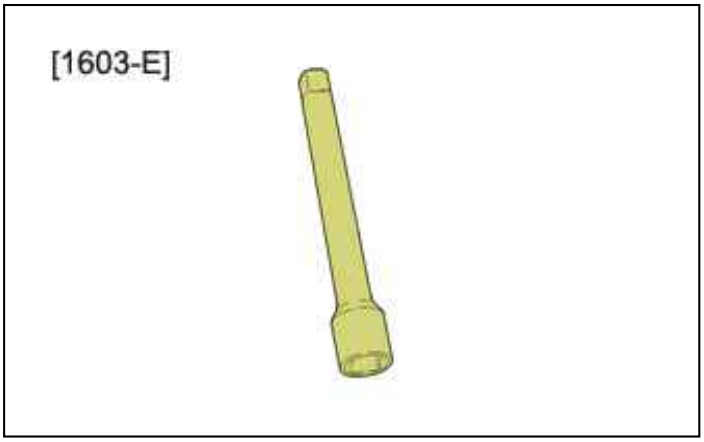 Figure : E5AG07XT		
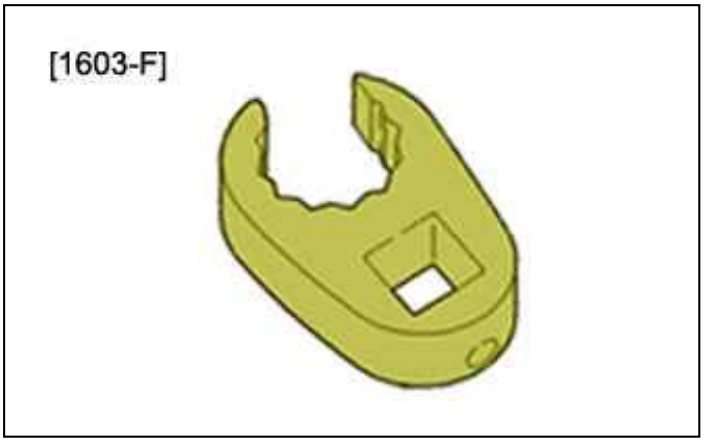 Figure : E5AG07LT	[1603-F]	pipe spanner

2. Removing

Disconnect the battery.
Remove :

- The air filter housing
- The front upper bumper (If the vehicle has the air conditioning function)
- The front panel upper crossmember (If the vehicle has the air conditioning function)
- The engine style cover

Drain the cooling system.
Move aside the coolant outlet housing.

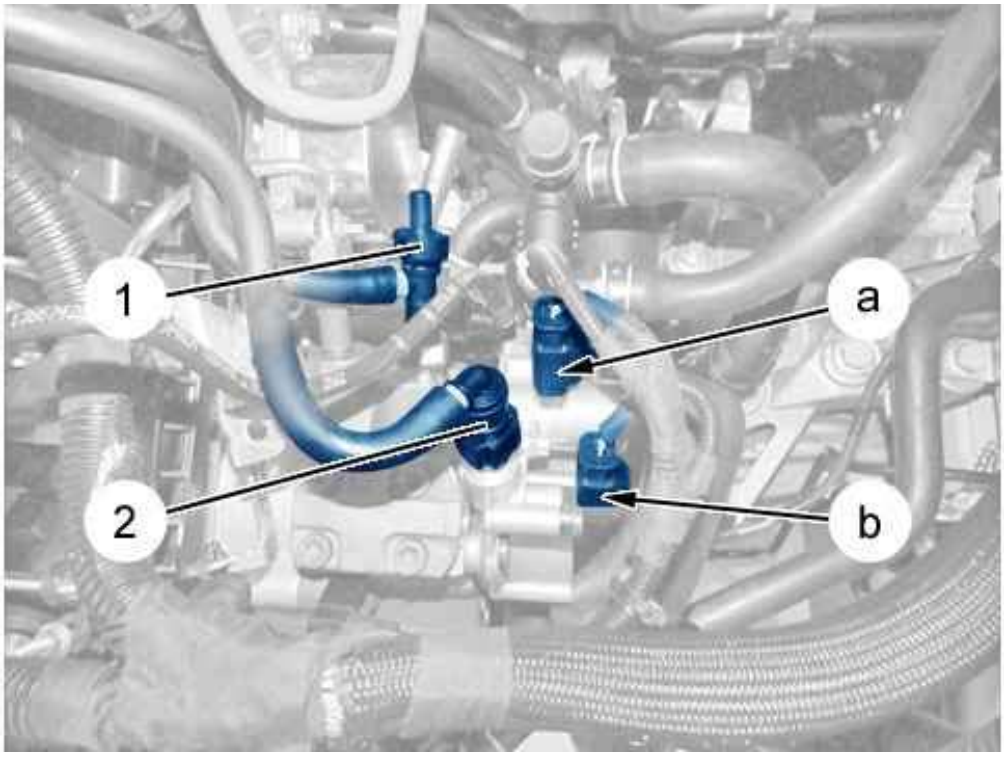

Figure : B1HG3E9D

Disconnect the connectors (at "a", "b").

CAUTION : Plug the low pressure unions after uncoupling.

Uncouple :

- The fuel supply pipe (2)
- The fuel return pipe (1)

CAUTION : Clean the high pressure union before slackening .

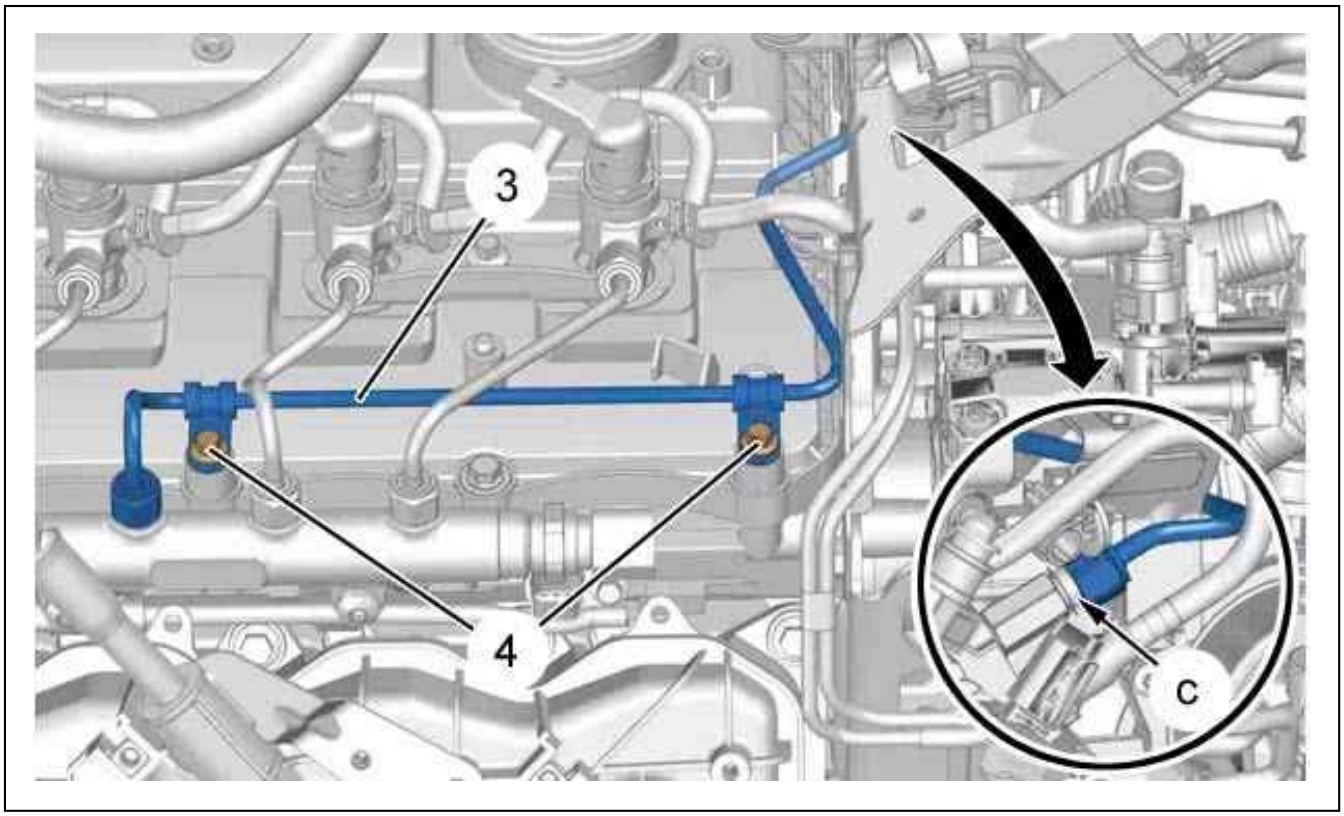

Figure : B1HG3EAD

Remove the bolts (4).
Apply a counter-torque (at "c").
Slacken the high pressure unions from the supply pipe .
Remove the high pressure supply pipe (3).

CAUTION : Plug the orifices of the high pressure pump ; Using tool [0188-T].

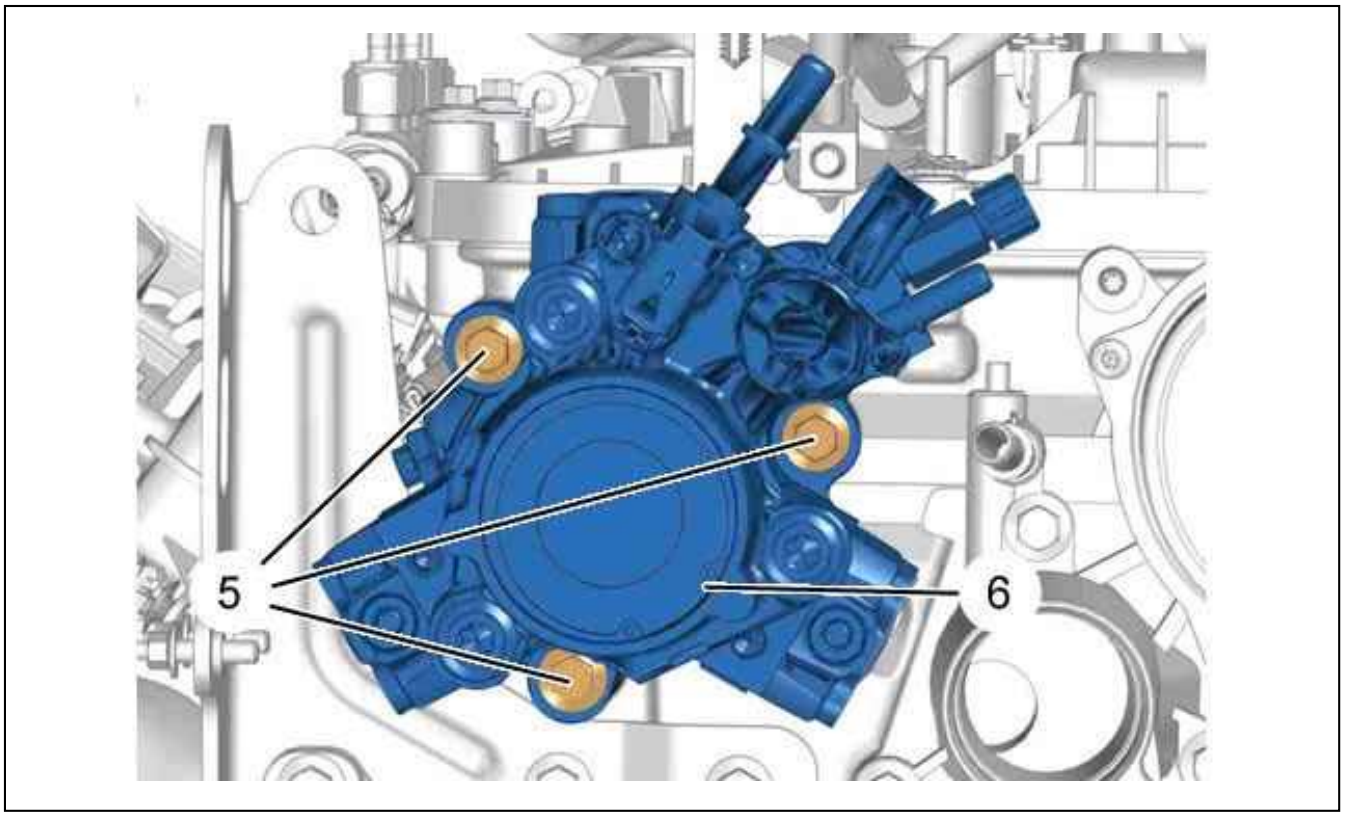

Figure : B1HG3EBD

Remove :

- The bolts (5)
- The fuel high pressure pump (6)

3. Refitting

CAUTION : Adhere to the tightening torques .

CAUTION : Refit a high pressure pipe (3) (new).

Refit :

- The fuel high pressure pump (6) (equipped with a new seal)
- The bolts (5)

Tighten the bolts (5).
Refit :

- The high pressure supply pipe (3)
- The bolts (4)

Do up the high pressure unions by hand.

3.1. Tightening torque : High pressure fuel unions

Apply a counter-torque (at "c").
Using tools [1603-A], [1603-F] and [1603-E] :

- Pre-tighten : The high pressure connectors
- Tighten : The high pressure connectors

3.2. Refitting (continued)

Couple up :

- The fuel return pipe (1)
- The fuel supply pipe (2)

Connect the connectors (at "a", "b").
Position : The thermostat .
Fill and bleed the cooling system.
Refit :

- The engine style cover
- The front panel upper crossmember (If the vehicle has the air conditioning function)
- The front upper bumper (If the vehicle has the air conditioning function)
- The air filter housing

CAUTION : Perform the operations to be carried out following reconnection of the battery.

Reconnect the battery.

4. Bleed procedure / Checking for leaks

CAUTION : It is necessary to perform the "replacement of the metering pump" procedure in the RP (Replacemen Parts) menu ; Using the diagnostic tool.

CAUTION : Spray the leak detector product on the unions of the high-pressure fuel pipes (3).

Allow the product to dry.
Switch on the ignition 10 times in succession over a period of 5 seconds, without starting the engine, this to prime the fuel circuit.
Prime the vaporiser circuit ; Using the diagnostic tool.
Start the engine.
Check the absence of leaks.
Initialise the fuel high pressure pump ; Using the diagnostic equipment.
Carry out a road test.
Check the absence of leaks.

REMOVING - REFITTING : FUEL HIGH PRESSURE COMMON INJECTION RAIL

ESSENTIAL : Observe the safety and cleanliness recommendations .

1. Tooling

Equipment :

- leak detector
- Diagnostic tool

Tools	Reference	Designation
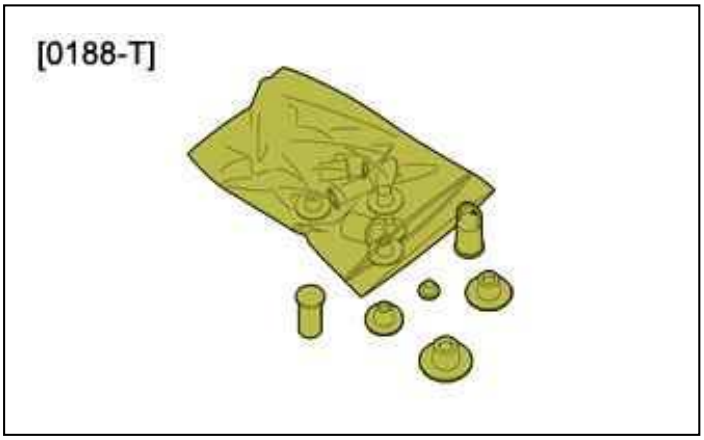 Figure : E5AB06IT	[0188-T]	plugs kit
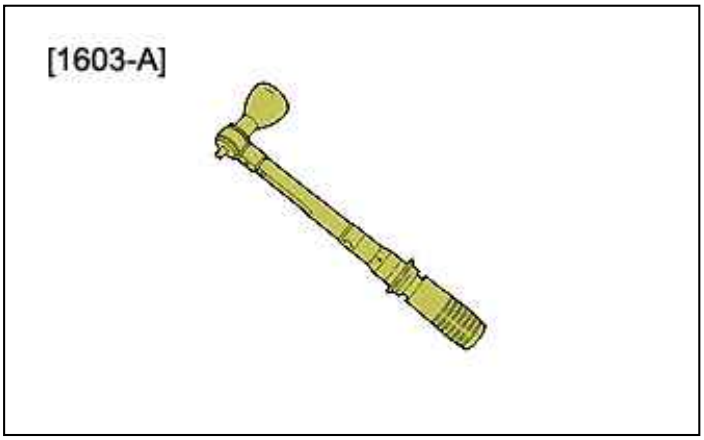 Figure : E5AG07KT	[1603-A]	Torque wrench
	[1603-E]	Extension

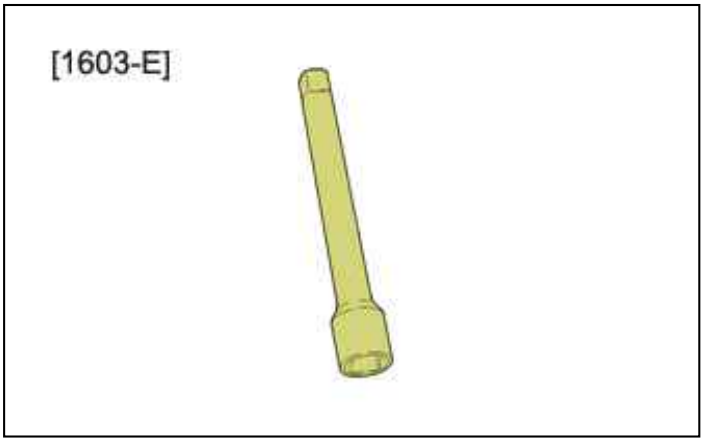 Figure : E5AG07XT		
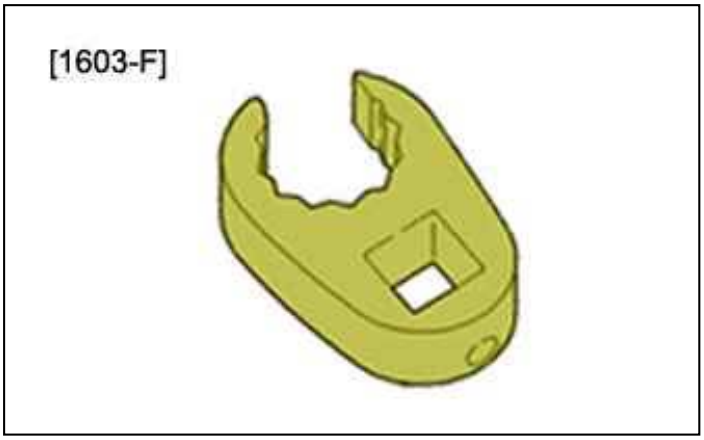 Figure : E5AG07LT	[1603-F]	pipe spanner

2. Removing

Disconnect the battery negative terminal.
Remove :

- The front upper bumper (vehicle equipped with air conditioning)
- The front panel upper crossmember (vehicle equipped with air conditioning)
- The engine style cover

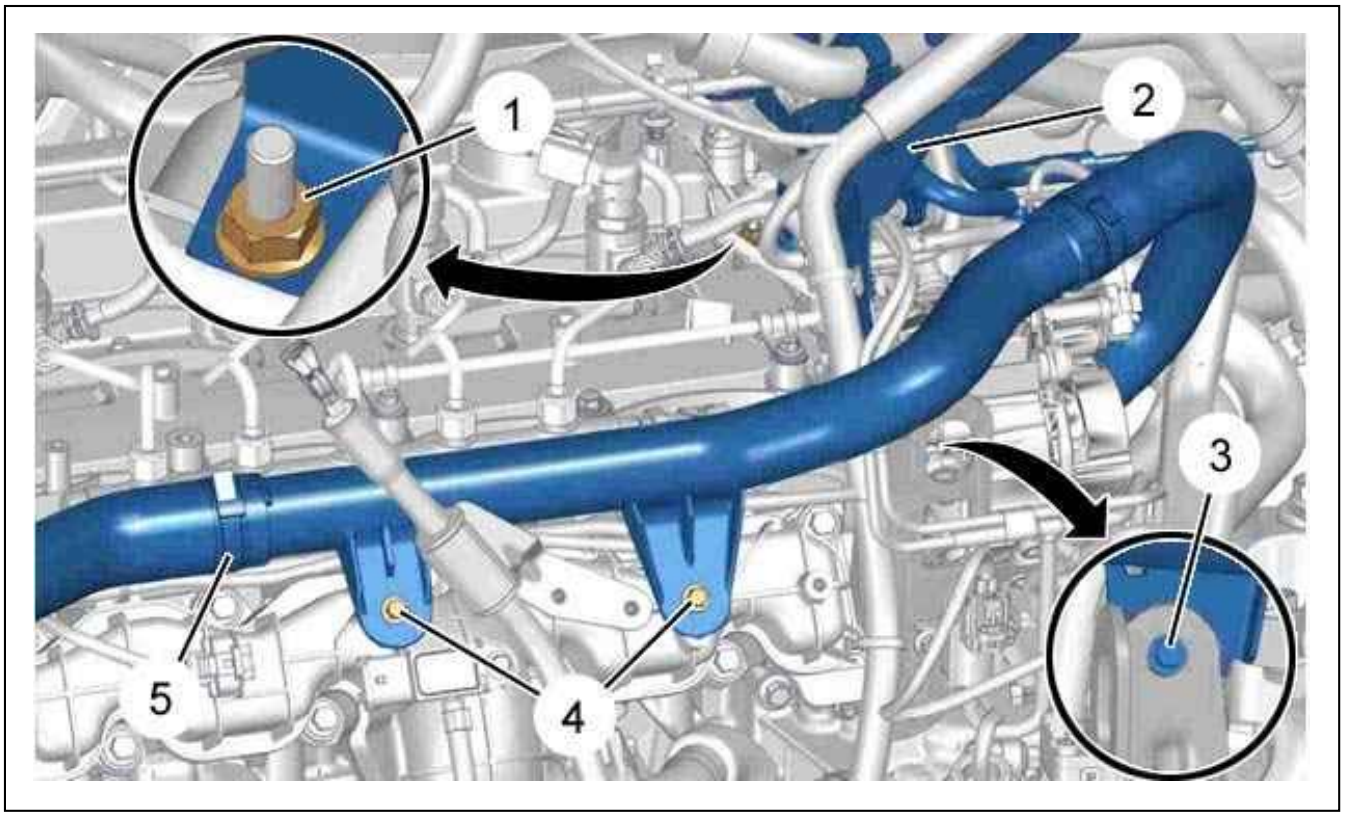

Figure : B1HG3EDD

Remove :

- The (3) bolt
- The nut (1)
- The bolts (4)

Release :

- The harness bracket (2)
- The coolant pipe (5)

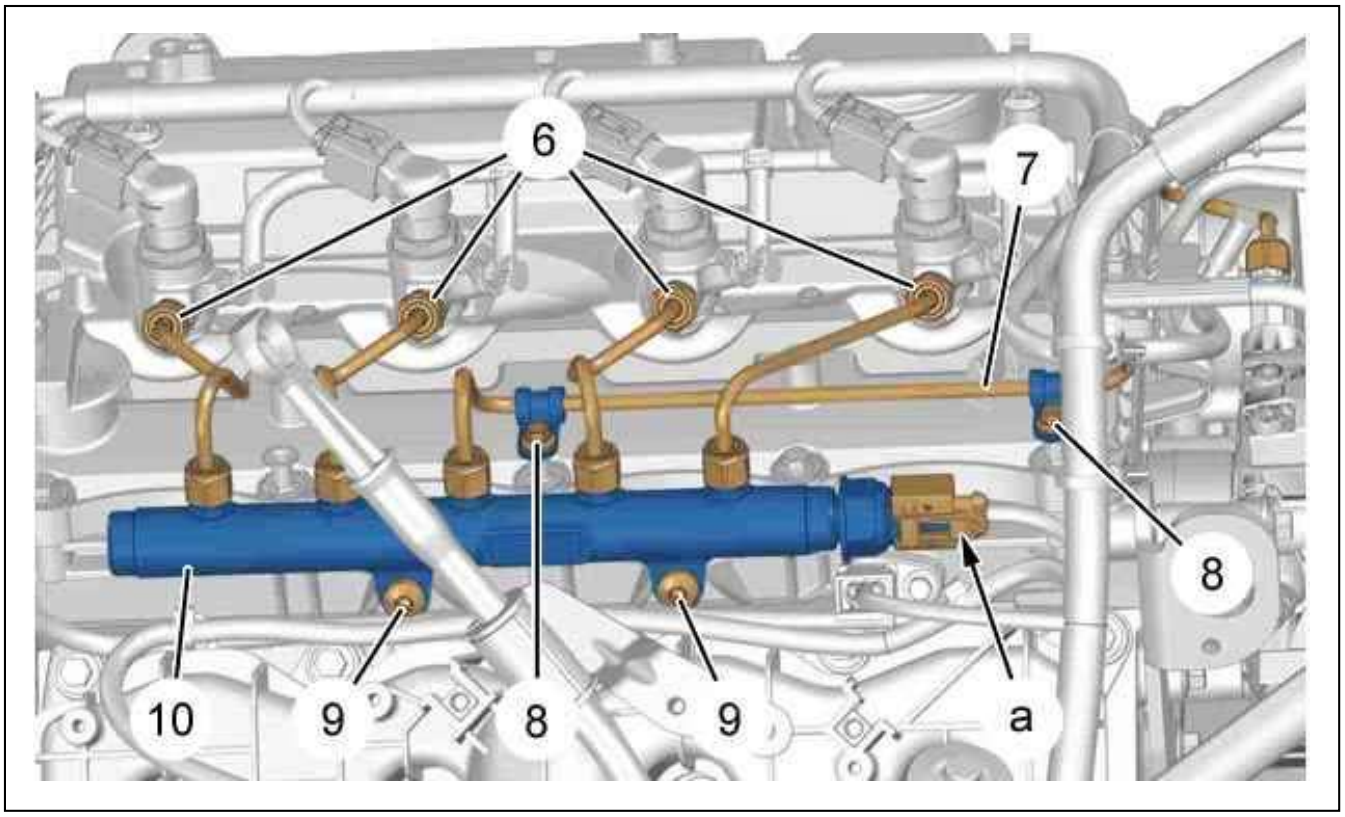

Figure : B1HG3HDD

Disconnect the fuel high pressure sensor (at "a").

CAUTION : Clean the high pressure unions before slackening (see the relevant operation).

CAUTION : Plug the unions on the diesel injector and fuel high pressure common injection rail ; Using the tools [0188-T].

Unscrew :

- The unions of the high pressure fuel pipes (6) ; Using the tools [1603-A], [1603-F], [1603-E]
- The high pressure fuel supply pipe (7) unions ; Using the tools [1603-A], [1603-F], [1603-E]

Remove :

- The high pressure fuel supply pipes (6)
- The bolts (8)
- The high pressure fuel supply pipe (7)
- The bolts (9)
- The fuel high pressure common injection rail (10)

3. Refitting

CAUTION : Adhere to the tightening torques .

CAUTION : Replace the removed diesel injection high pressure pipe(s).

Refit :

- The fuel high pressure common injection rail (10)
- The bolts (9) (without tightening)

- The high pressure supply pipe (7) (new)

Fully tighten manually to the end of the thread : The high pressure supply pipe (7) (new).
Refit and fully tighten manually bolts (8).
Tighten the high pressure fuel supply pipe (7) (new) ; Using the tools [1603-A], [1603-F], [1603-E].
Tighten the bolts (8) to torque.
Fit the new high pressure fuel supply pipes (6) (Cylinders 1 and 2).
Fully tighten manually to the end of the thread : The unions of the high pressure fuel pipes (6) (new).
Fit the new high pressure fuel supply pipes (6) (Cylinders 3 and 4).
Fully tighten manually to the end of the thread : The unions of the high pressure fuel pipes (6) (new).
Tighten The high pressure fuel pipe unions (6) (new) ; Using the tools [1603-A], [1603-F], [1603-E].
Tighten the bolts (9) to torque.
Connect the fuel high pressure sensor (at "a").
Position :

- The coolant pipe (5)
- The harness support (2) on the lifting bracket

Refit :

- The bolts (4)
- The nut (1)
- The bolt (3)
- The engine style cover
- The front upper bumper (vehicle equipped with air conditioning)
- The front panel upper crossmember (vehicle equipped with air conditioning)

CAUTION : Perform the operations to be carried out following reconnection of the battery.

Reconnect the battery.

4. Bleed procedure / Checking for leaks

CAUTION : It is necessary to perform the "replacement of the metering pump" procedure in the RP (Replacemen Parts) menu ; Using the diagnostic tool.

CAUTION : Spray the leak detector product on the unions of the high-pressure fuel pipes .

Allow the product to dry.
Switch on the ignition 10 times in succession over a period of 5 seconds, without starting the engine, this to prime the fuel circuit.
Prime the vaporiser circuit ; Using the diagnostic tool.
Initialise the high pressure pump ; Using the diagnostic equipment.
Start the engine.
Check the absence of leaks.
Carry out a road test.
Check the absence of leaks.

REMOVING - REFITTING : AIR INLET FLOW METER

ESSENTIAL : Observe the safety and cleanliness recommendations .

1. Location

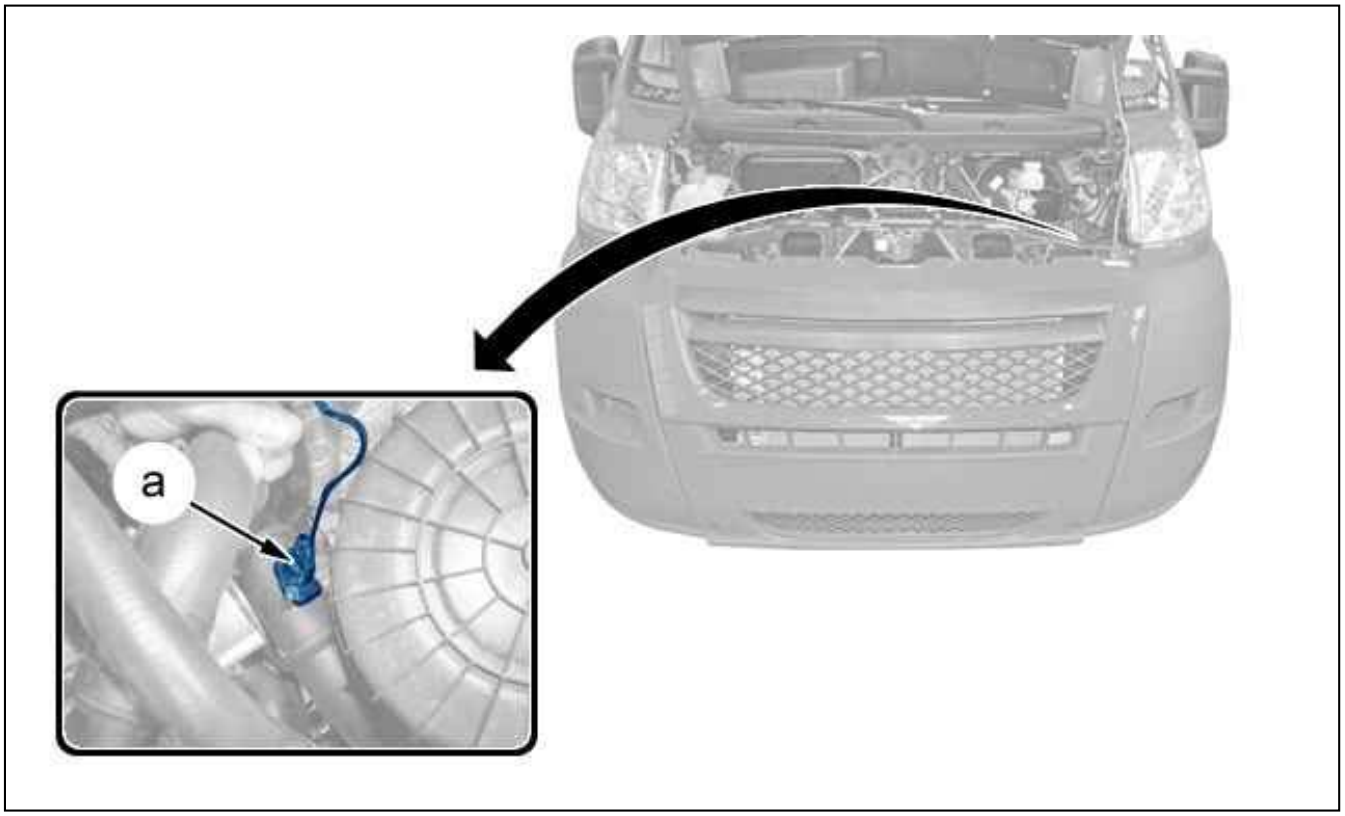

Figure : B1HG3HED

The air flowmeter is located on the turbocharger air inlet duct (at "a").

2. Removing

Disconnect the battery.

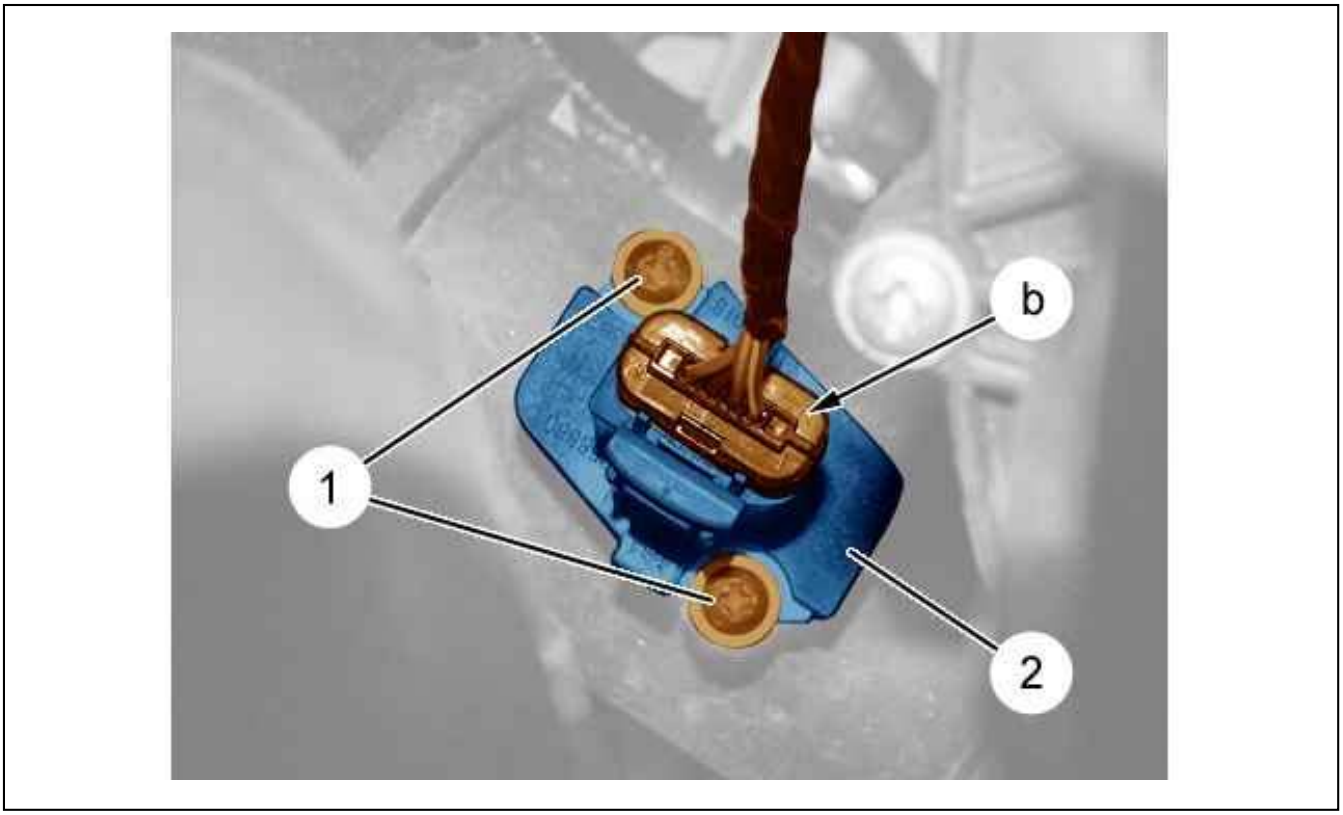

Figure : B1HG3HFD

Disconnect the connector (at "b").
Remove :

- The 2 bolts (1)
- The flow meter (2)

3. Refitting

Refit :

- The flow meter (2)
- The 2 bolts (1)

Reconnect the connector (at "b").

CAUTION : Perform the operations to be carried out following reconnection of the battery.

Reconnect the battery.

REMOVING - REFITTING : AIR METERING UNIT

ESSENTIAL : Observe the safety and cleanliness recommendations .

1. Removing

Disconnect the battery.

CAUTION : Protect the engine cooling radiator to prevent damage to the fins.

Remove the air inlet manifold .

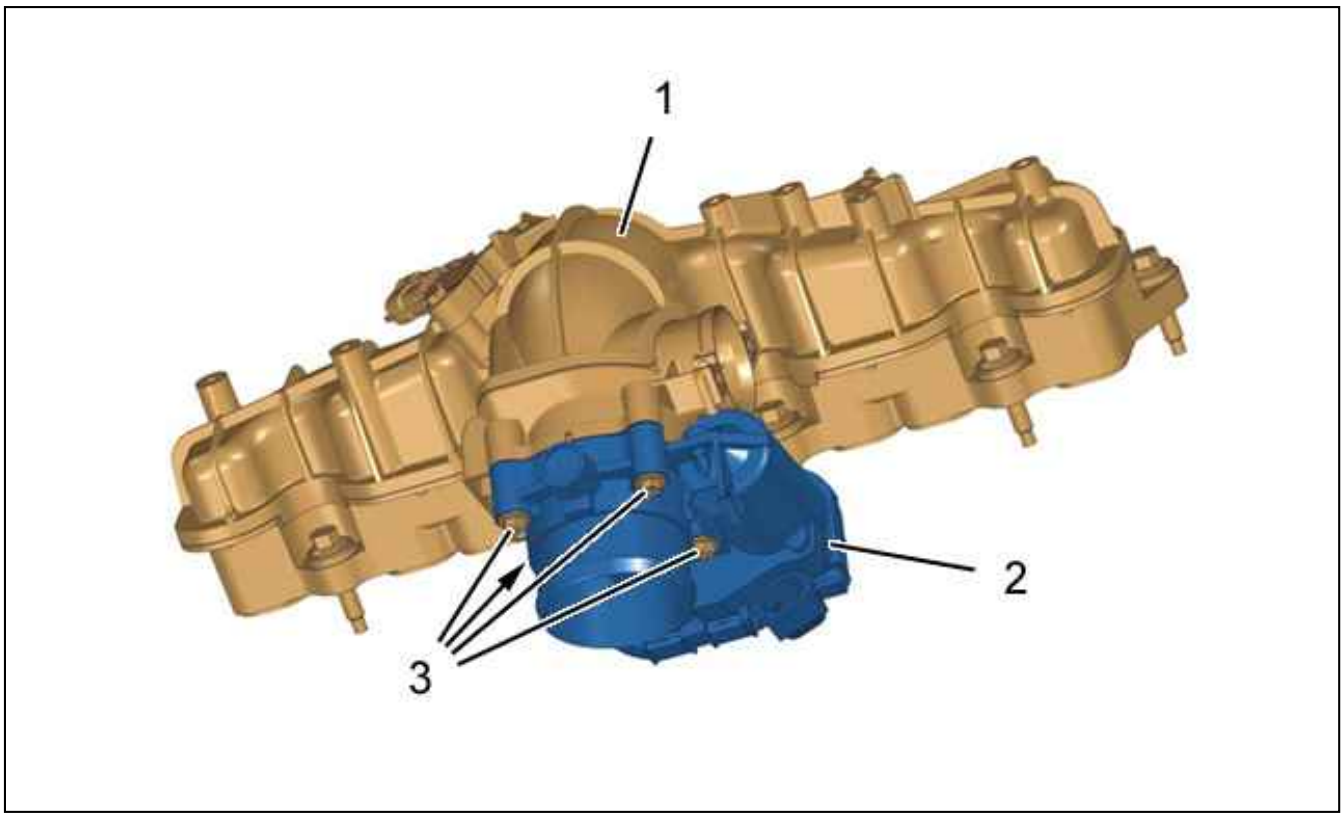

Figure : B1HG3HBD

Remove :

- The 4 bolts (3)
- The air mixer unit (2)

2. Refitting

CAUTION : Adhere to the tightening torques .

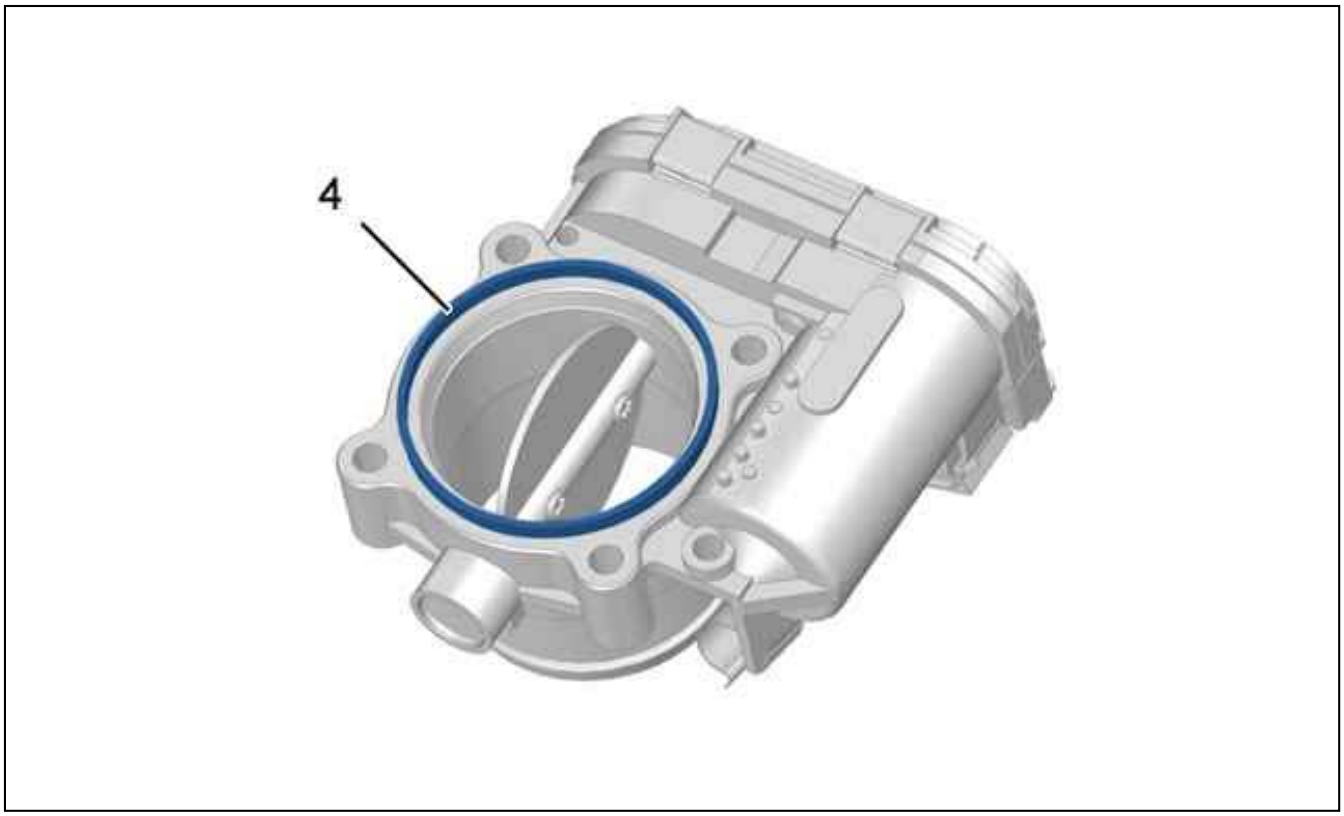

Figure : B1HG3HCD

CAUTION : Check the condition of the seal (4) ; Exchange it if necessary.

Position :

- The seal (4) on the inlet air mixer unit (2)
- The inlet air mixer unit (2) on the air inlet manifold (1)

Refit :

- The 4 bolts (3)
- The inlet manifold

CAUTION : Perform the operations to be carried out following reconnection of the battery.

Reconnect the battery.

REMOVING - REFITTING : FUEL PUMP AND GAUGE ASSEMBLY

ESSENTIAL : Observe the safety and cleanliness recommendations .

ESSENTIAL : Respect the safety and cleanliness recommendations that are specific to high pressure diesel injection (HDi) engines .

CAUTION : For cleanliness reasons, it is recommended to remove the pump-gauge assembly with a fuel level as low as possible.

1. Tooling

Equipment : Apparatus for draining fuel tanks.

tool	Reference	Designation
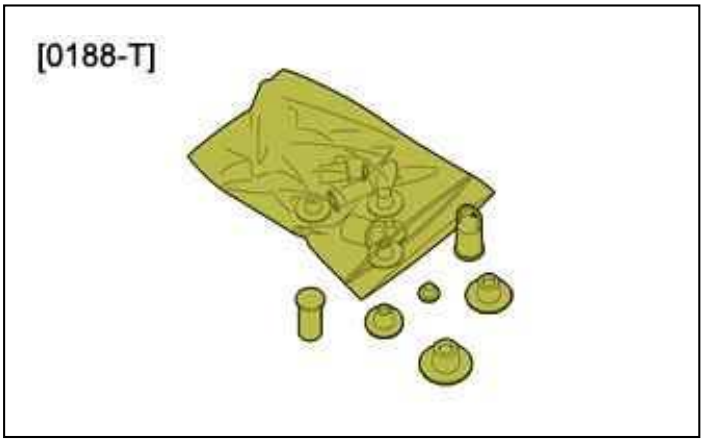 Figure : E5AB06IT	[0188-T]	plugs kit
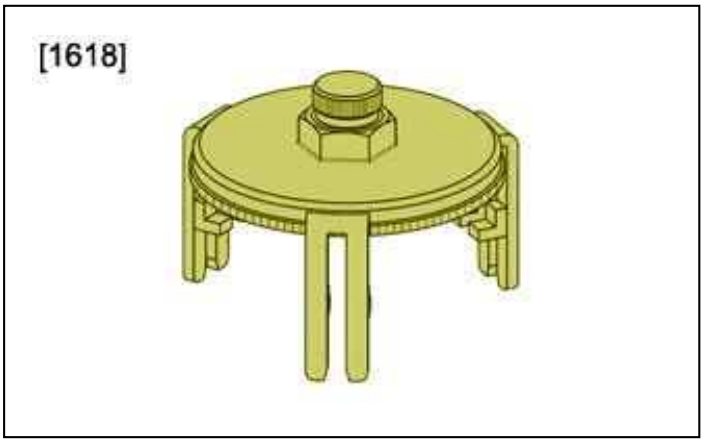 Figure : E5AB09PT	[1618]	Tool for fuel tank ring nut

2. Removing

CAUTION : After switching off the ignition, wait 15 minutes before disconnecting the battery (to guarantee that the initialisations of the various ECUs are memorised).

Disconnect the battery negative terminal.
Drain the fuel tank (if necessary) ; Using the apparatus for draining fuel tanks.



Figure : C5GP0Q2D

Remove the sound-deadening (1).

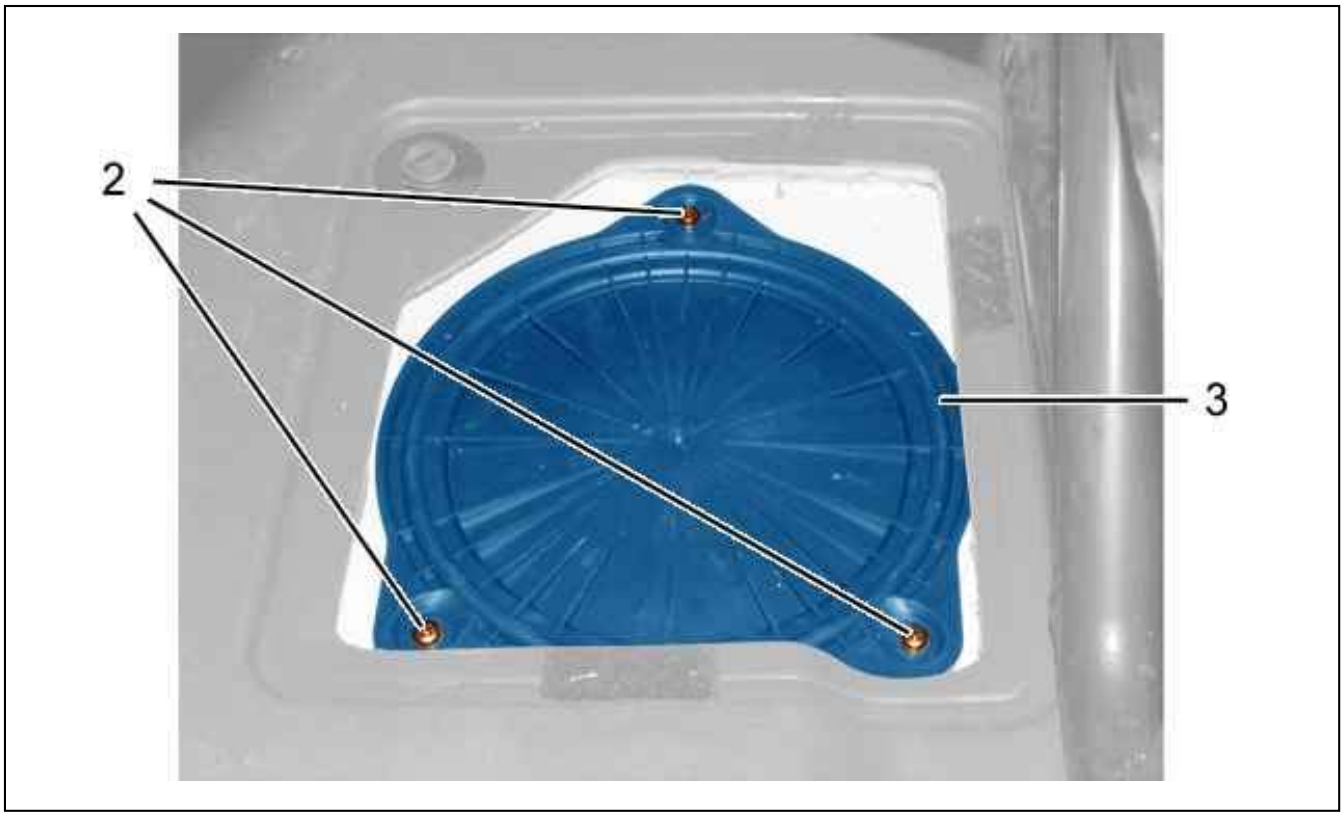

Figure : B1HP2ETD

Remove :

- The bolts (2)
- The access flap (3)

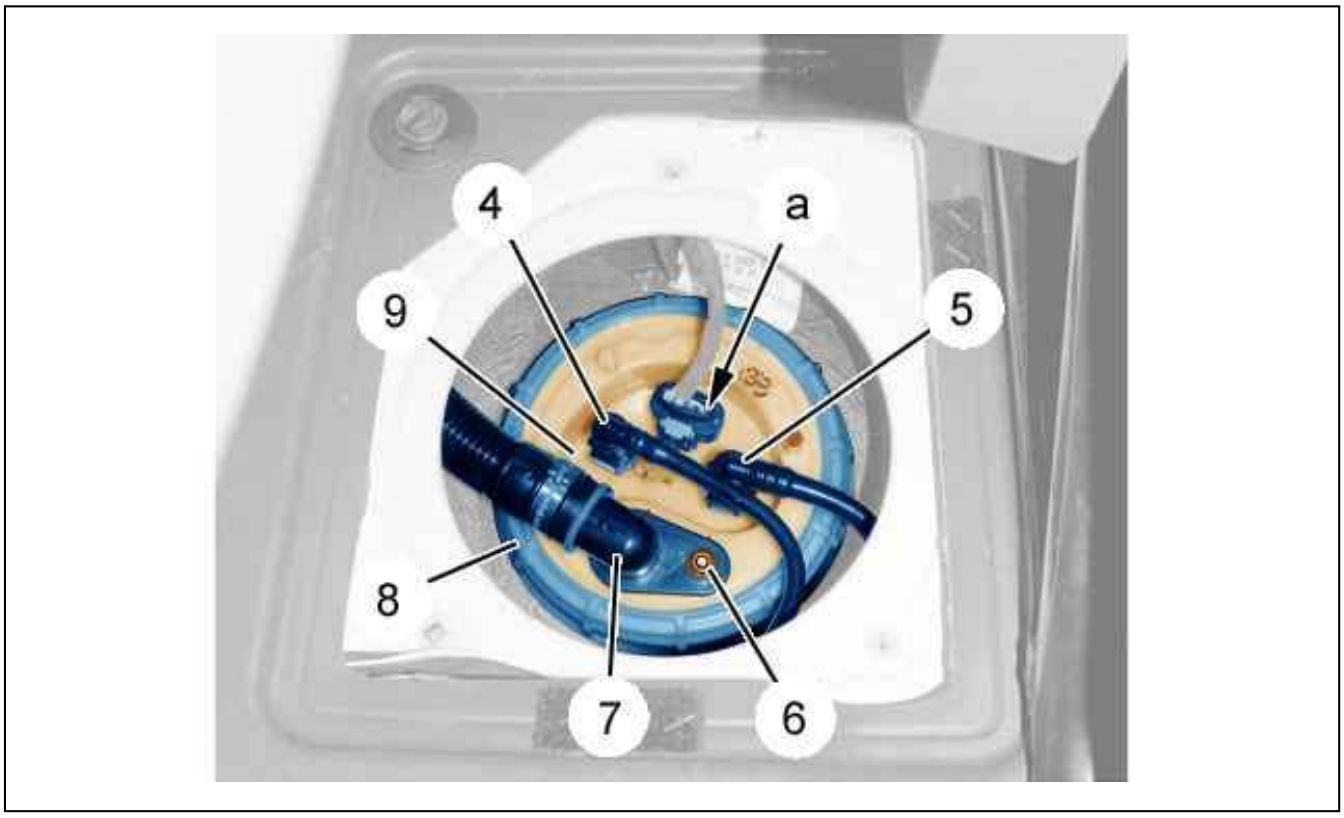

Figure : B1HP2EUD

Disconnect the connector (at "a").
Uncouple :

- The pipe (4)
- The pipe (5)

CAUTION : When uncoupling a pipe, plug the openings ; Using the tools [0188-T].

CAUTION : Plug the pipes on the tank unit assembly ; Using the tools [0188-T].

Remove :

- The nut (6)
- The breather pipe (7)

CAUTION : Protect the fuel gauge well periphery and fuel pump with absorbent paper.

Make a mark on the bush (8) and the fuel gauge and pump assembly (9) before slackening.

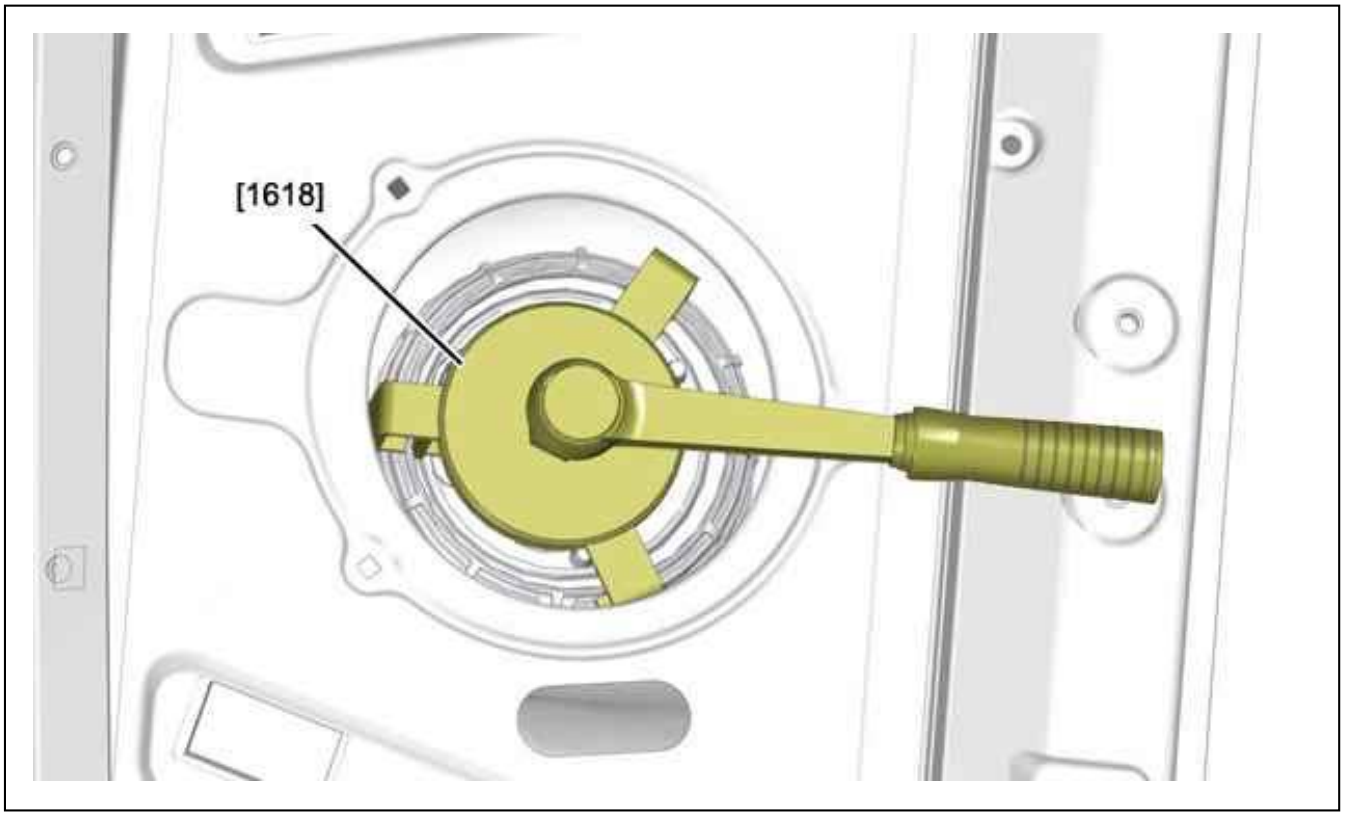

Figure : B1HG3ECD

Loosen the sleeve (8) ; Using tool [1618].
Remove the bush (8).

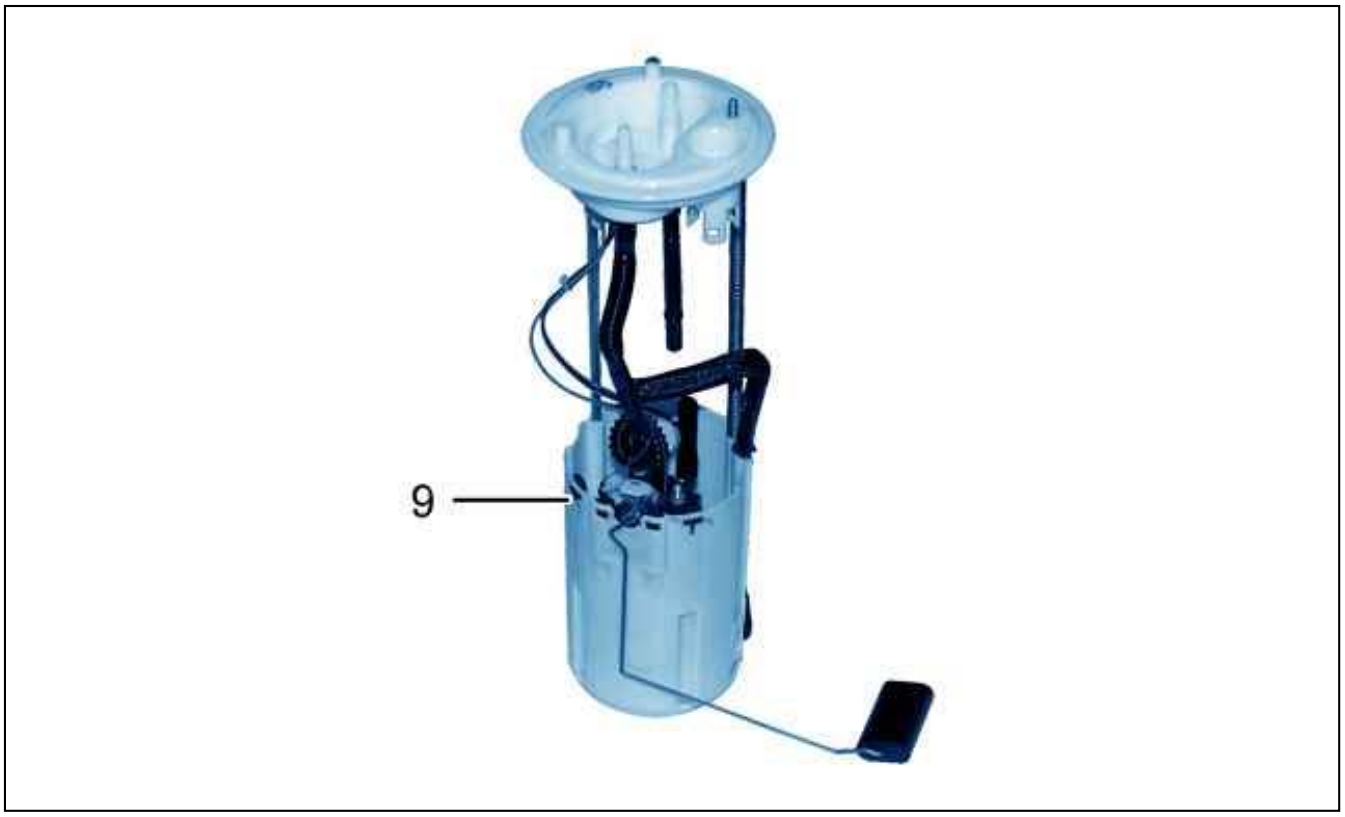

Figure : B1HP2EWD

Remove the fuel sender and pump (9) unit.

CAUTION : Immediately place a tray under the fuel pump and gauge assembly (9).

Remove the seal .

CAUTION : Following removal of the fuel pump and gauge assembly (9): Immediately do up the ring nut on the tank sc as to prevent any deformation of the pick-up unit (Risk of fuel leak).

3. Refitting

Systematically replace the seal .

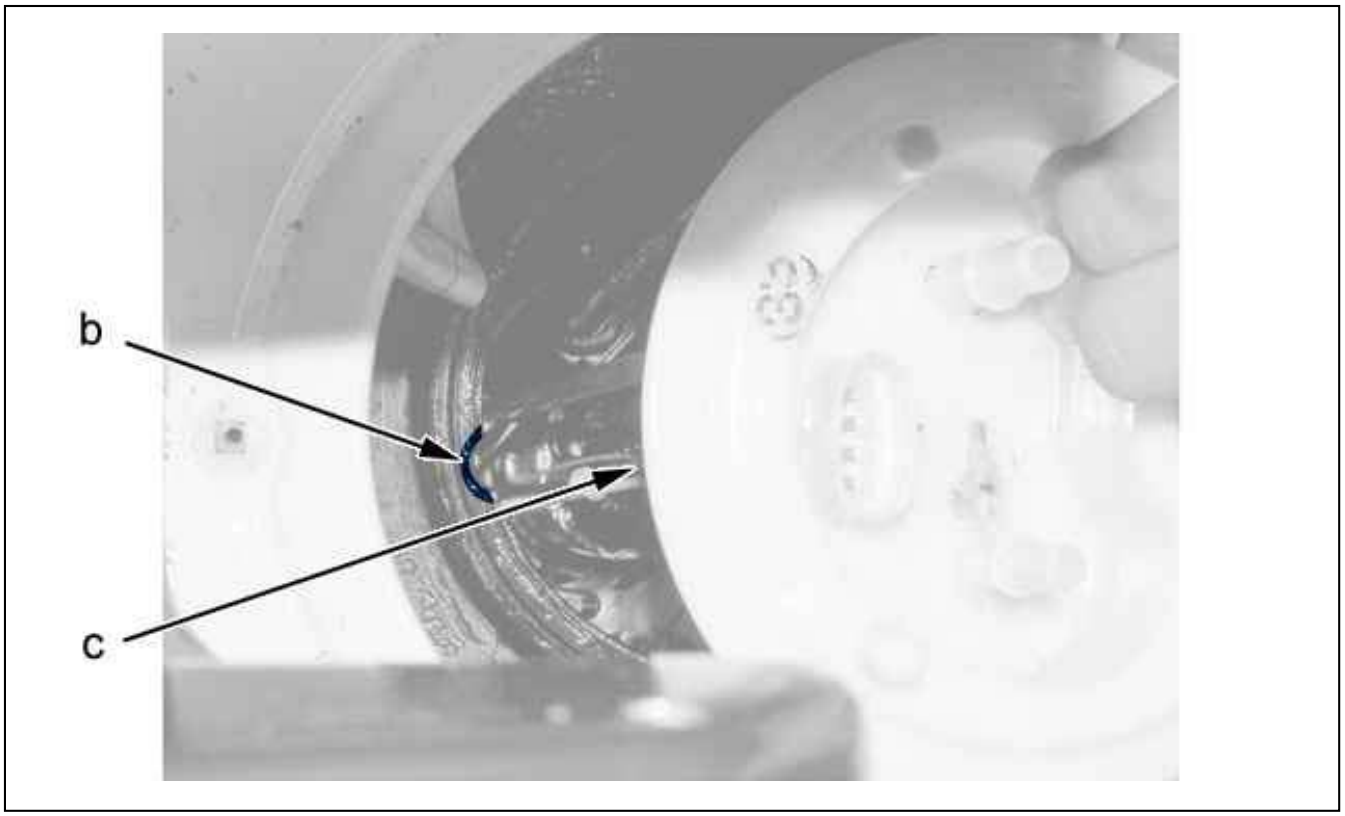

Figure : B1HP2EXD

Refit :

- The tank unit and fuel pump assembly (9) (refer to the Note)
- The bush (8)

N.B. : Align the tab "c" with the notch "b".

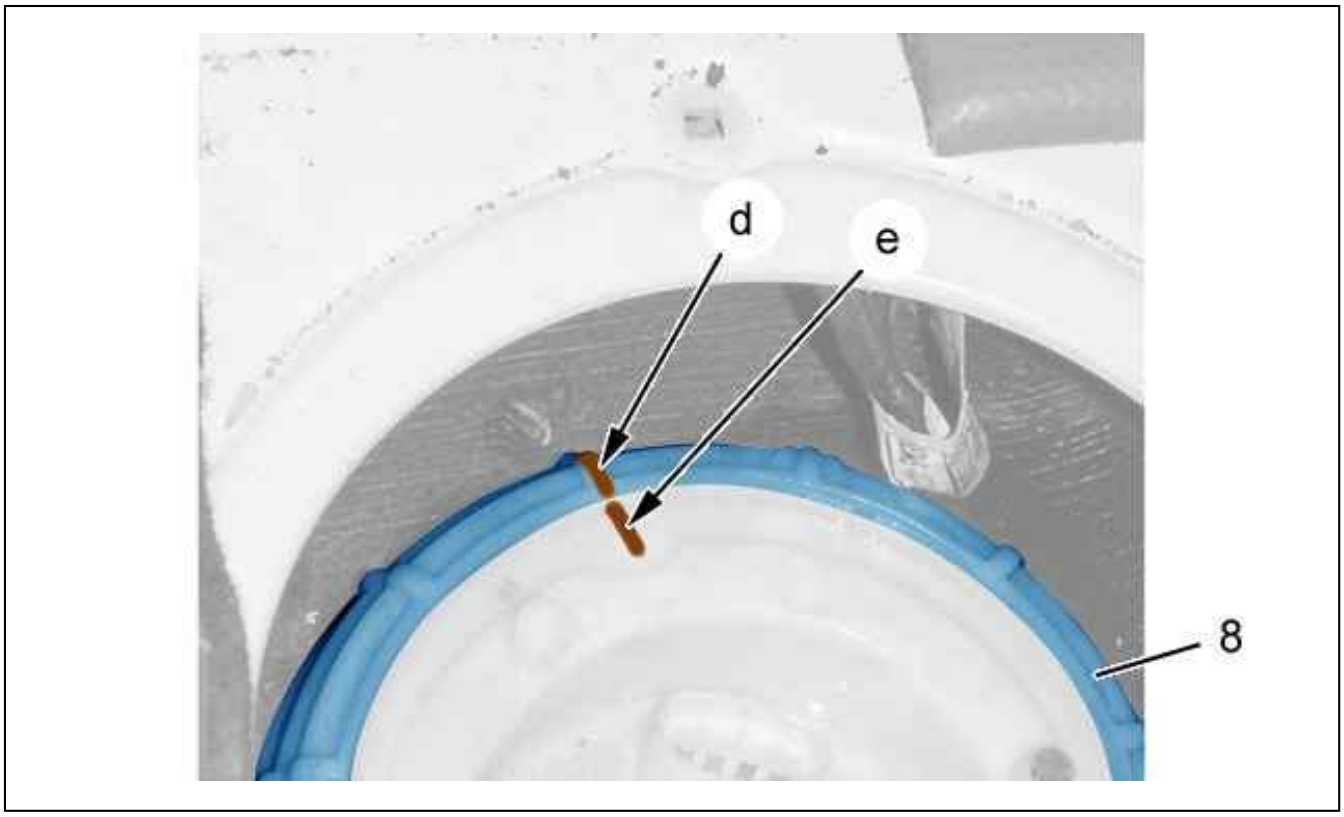

Figure : B1HP2EYD

Tighten the bush (8) ; Using the tool [1618] until the marks " d " and " e " are aligned.
Clean up any splashes of fuel.
Refit :

- The breather pipe (7)
- The nut (6)

Couple up :

- The pipe (5)
- The pipe (4)

Reconnect the connector (at "a").
Refit :

- The access flap (3)
- The bolts (2)
- The soundproofing (1)

CAUTION : Perform the operations to be carried out following reconnection of the battery.

Reconnect the battery.
Switch on the ignition 10 times in succession over a period of 5 seconds, without starting the engine, this to prime the fuel circuit.
Check that the fuel gauge works.

REMOVING - REFITTING : FUEL TANK

ESSENTIAL : Observe the safety and cleanliness recommendations .

1. Tooling

Equipment :

- Apparatus for draining fuel tanks
- Component lift
- Diagnostic tool

tool	Reference	Designation
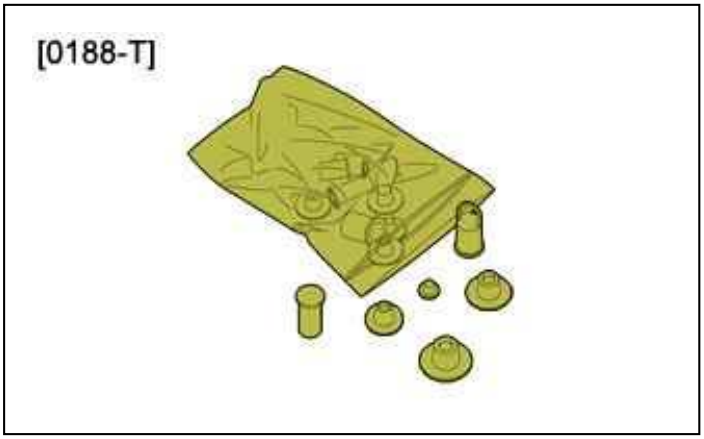 Figure : E5AB06IT	[0188-T]	plugs kit
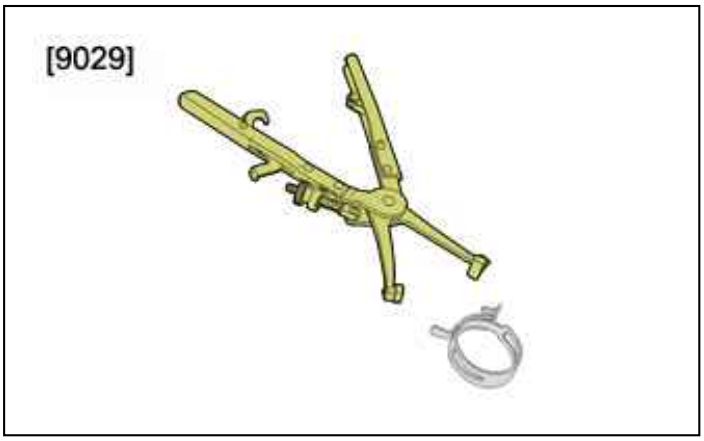 Figure : E5AB0CGT	[9029-T]	Pliers for removing elastic clips

2. Removing

Place the vehicle on a 2-post lift.

ESSENTIAL : Respect the safety and cleanliness recommendations that are specific to high pressure diesel

injection (HDi) engines .

CAUTION : After switching off the ignition, wait 15 minutes before disconnecting the battery (to guarantee that the initialisations of the various ECUs are memorised).

Disconnect the battery.
Drain the fuel tank ; Using the apparatus for draining fuel tanks.



Figure : C5GP0Q0D

Remove the sound-deadening (1).

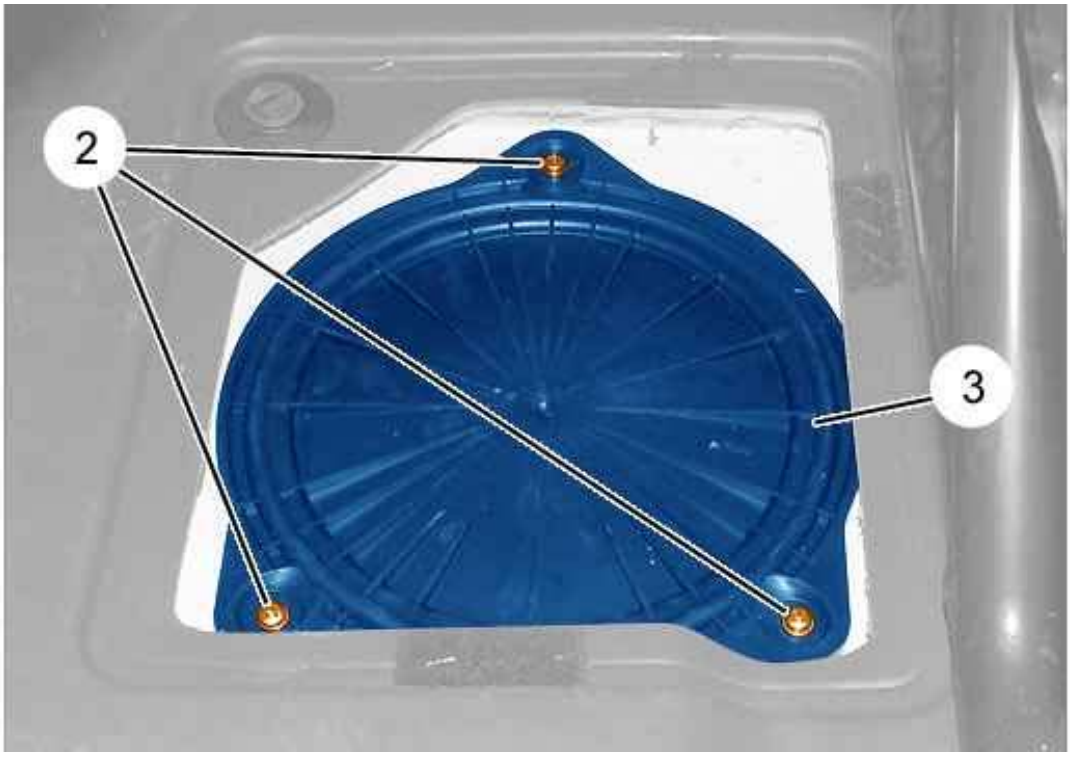

Figure : C5GP0Q1D

Remove :

- The bolts (2)
- The access flap (3)

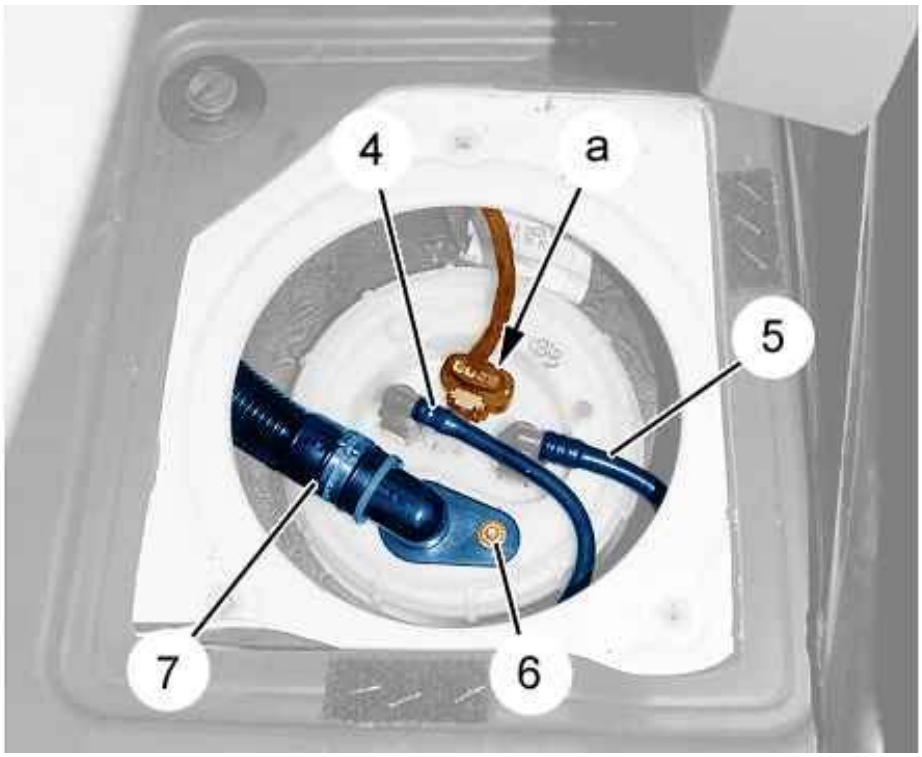

Figure : B1HP2DXD

Disconnect the connector (at "a").
Uncouple :

- The pipe (4)
- The pipe (5)

CAUTION : Plug the openings when you uncouple a duct ; Using tool [0188-T].

CAUTION : Plug the pipes on the tank unit assembly ; Using tool [0188-T].

Remove the nut (6).
Uncouple the venting pipe (7) from the fuel tank.

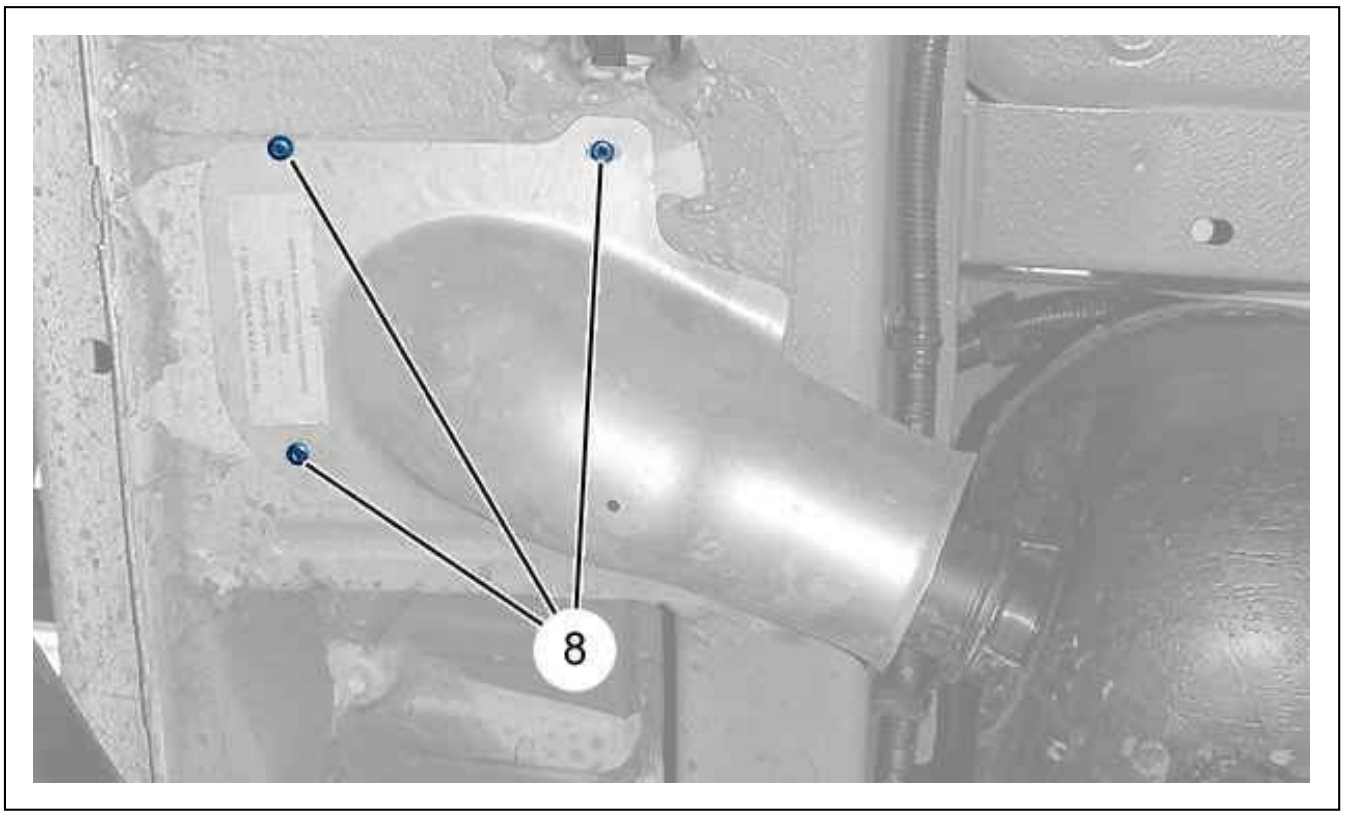

Figure : B1HP2DYD

Drill the heads of the 3 rivets (8).

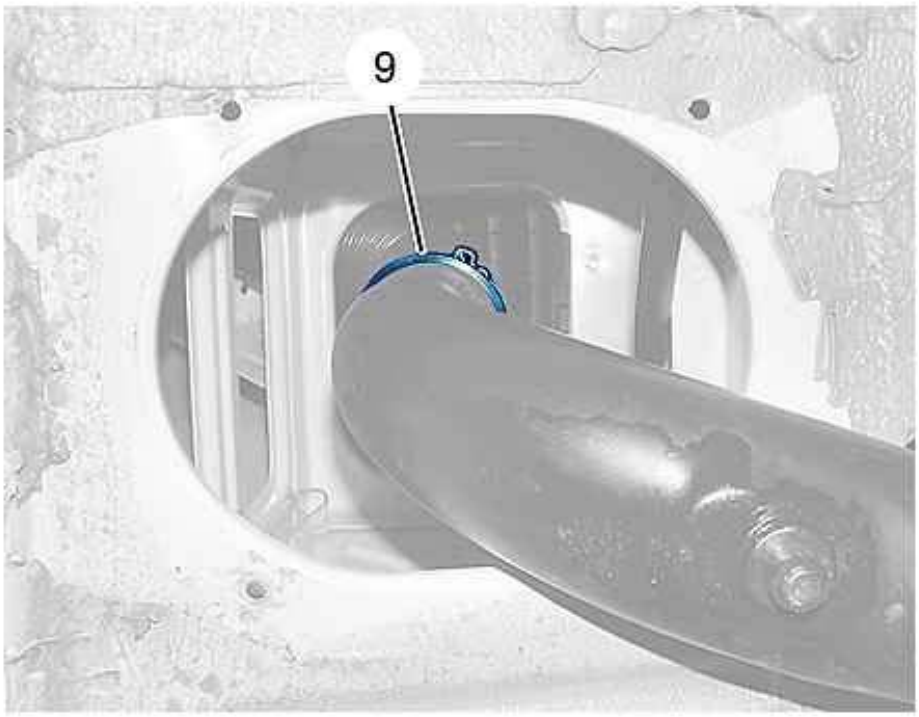

Figure : B1HP2DZD

Remove the clip (9) from the fuel tank filler neck ; Using tool [9029-T].

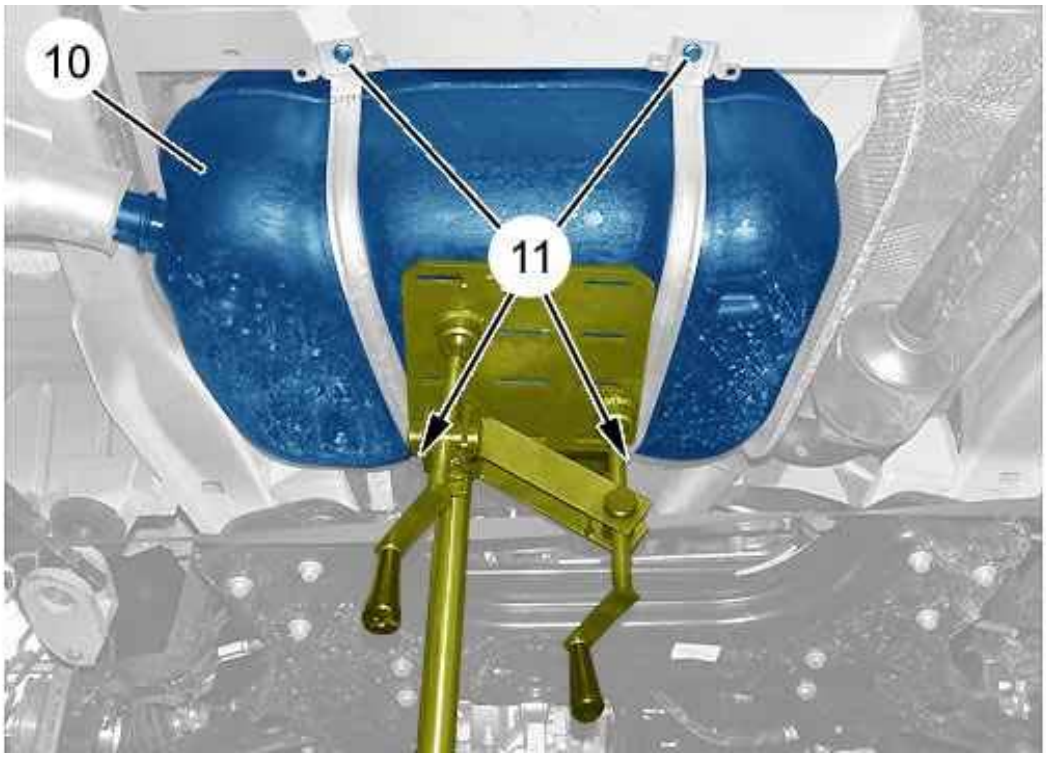

Figure : B1HP2E0D

Position a component lift under the fuel tank (10).
Remove :

- The bolts (11)
- The fuel tank (10)

3. Refitting

CAUTION : Adhere to the tightening torques .

Refit :
- The fuel tank (10)
- The bolts (11)

Remove the unit lifting jack.
Refit the clip (9) on the fuel tank filler neck (10) ; Using tool [9029-T].
Refit new rivets (8).
Couple the venting pipe (7) on the fuel tank (10).
Tighten the nut (6).
Remove the tool [0188-T].
Couple up :
- The pipe (5)
- The pipe (4)

Connect the connector (at "a").
Refit :
- The access flap (3)
- The bolts (2)
- The soundproofing (1)

Fill the fuel tank (10) ; Using the apparatus for draining fuel tanks.

CAUTION : Perform the operations to be carried out following reconnection of the battery.

Reconnect the battery.

4. Priming of the EURO 4 fuel circuit

CAUTION : Prime the fuel circuit by actioning the ignition key several times to the ignition+ position.

Check that the fuel gauge works.
Return the vehicle to its wheels.

5. Priming of the EURO 5 fuel circuit

CAUTION : It is necessary to perform the "replacement of the metering pump" procedure in the RP (Replacemen Parts) menu ; Using the diagnostic tool.

Prime the vaporiser circuit ; Using the diagnostic tool.
Switch on the ignition 10 times in succession over a period of 5 seconds, without starting the engine, this to prime the fuel circuit.
Check that the fuel gauge works.
Return the vehicle to its wheels.

REMOVING - REFITTING : FUEL FILTER

ESSENTIAL : Observe the safety and cleanliness recommendations .

1. Tooling

Equipment :

- Cleaner for diesel fuel filter bowls (index "N3")
- Brush
- Cleaning tray

tool	Reference	Designation
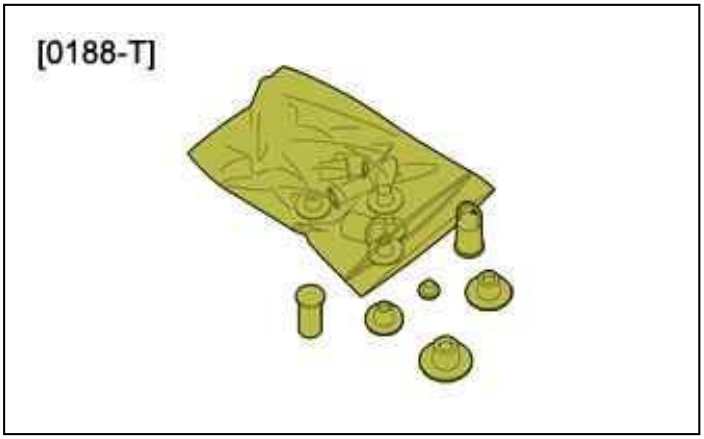 Figure : E5AB06IT	[0188-T]	plugs kit
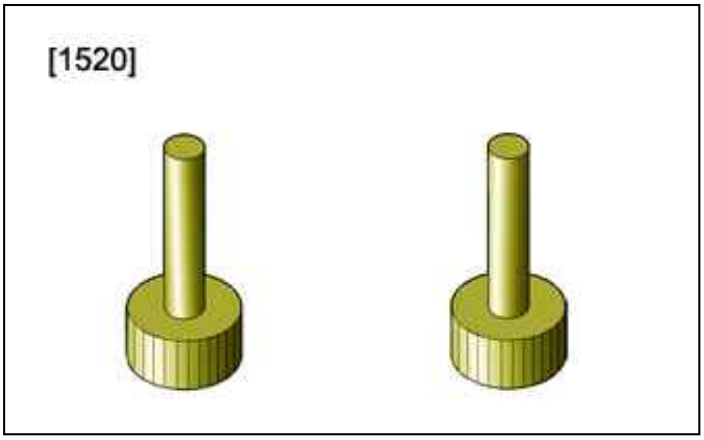 Figure : E5AB0A7T	[1520]	Blanking cover for snap-on unions
	[5726-T]	Connector for diesel filter draining

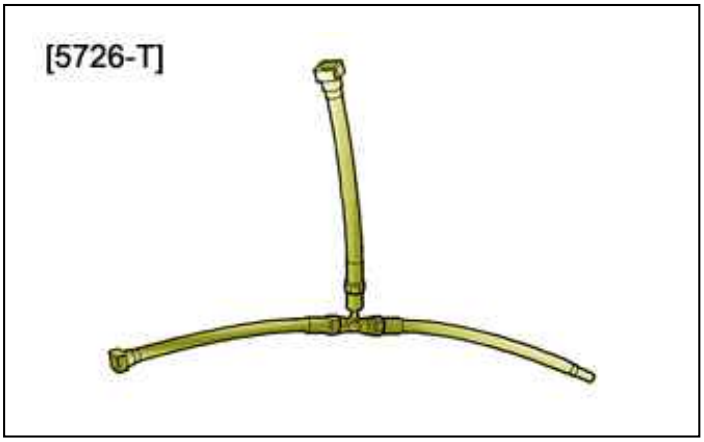 Figure : E5AB0ZAT		
 Figure : E5AB0ZBT	[1604-M]	Adaptor for union for bleeding the diesel filter

2. Removing

Disconnect the battery.
Remove the front protection under the engine.

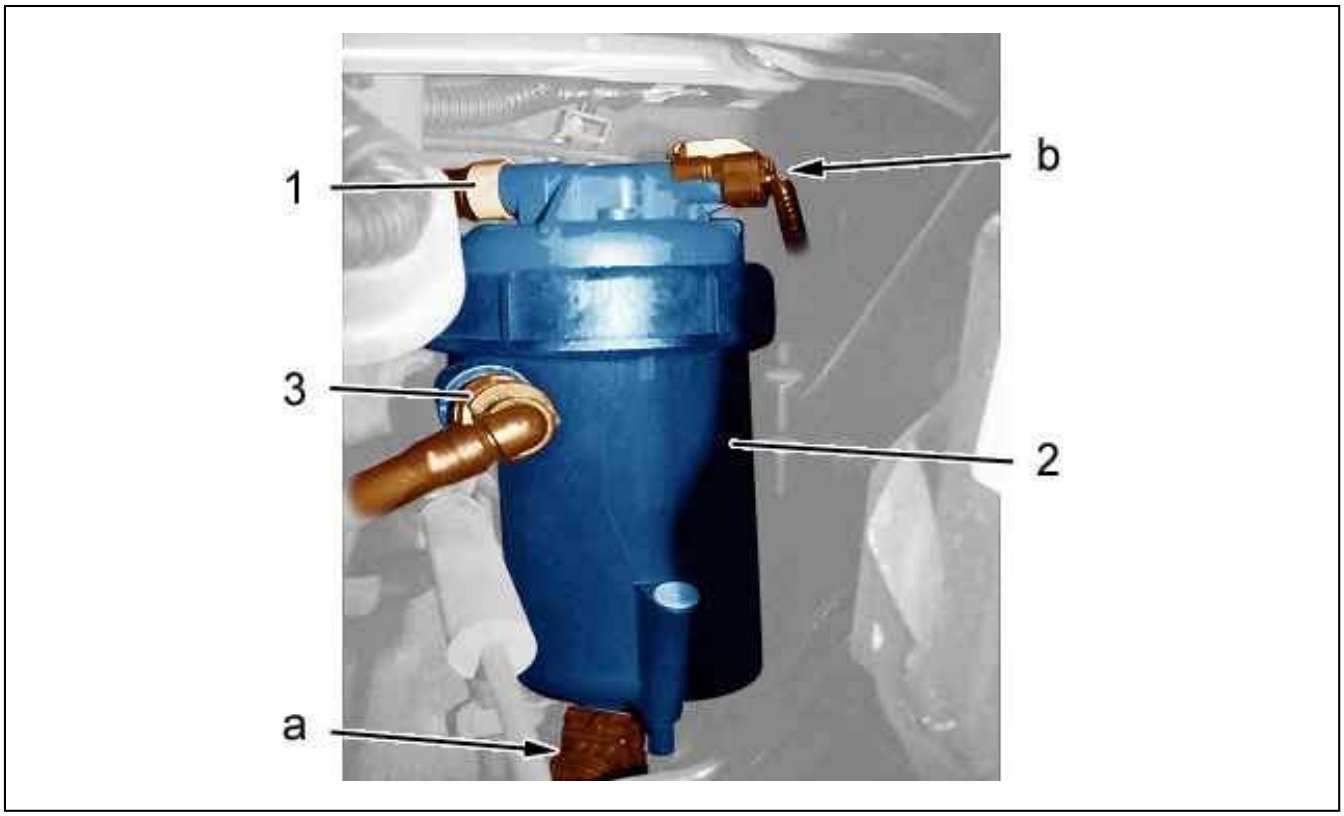

Figure : B1HG2R8D

Pour the diesel filter bowls cleaning product index "N3" into the cleaning tray.
Clean the unions of the pipes (1), (3) on the fuel filter (2) ; Using a paint brush .

CAUTION : Plug the orifices when uncoupling a pipe ; Using tool [0188-T].

Uncouple - Blank off the tubes (1), (3).

CAUTION : Plug the ducts on the fuel filter (2) ; Using the tools [1520].

Unplug :

- The connector (at "a")
- The connector (at "b") (according to equipment)

Unclip the fuel filter assembly (2) (towards the top).
Remove the fuel filter (2).

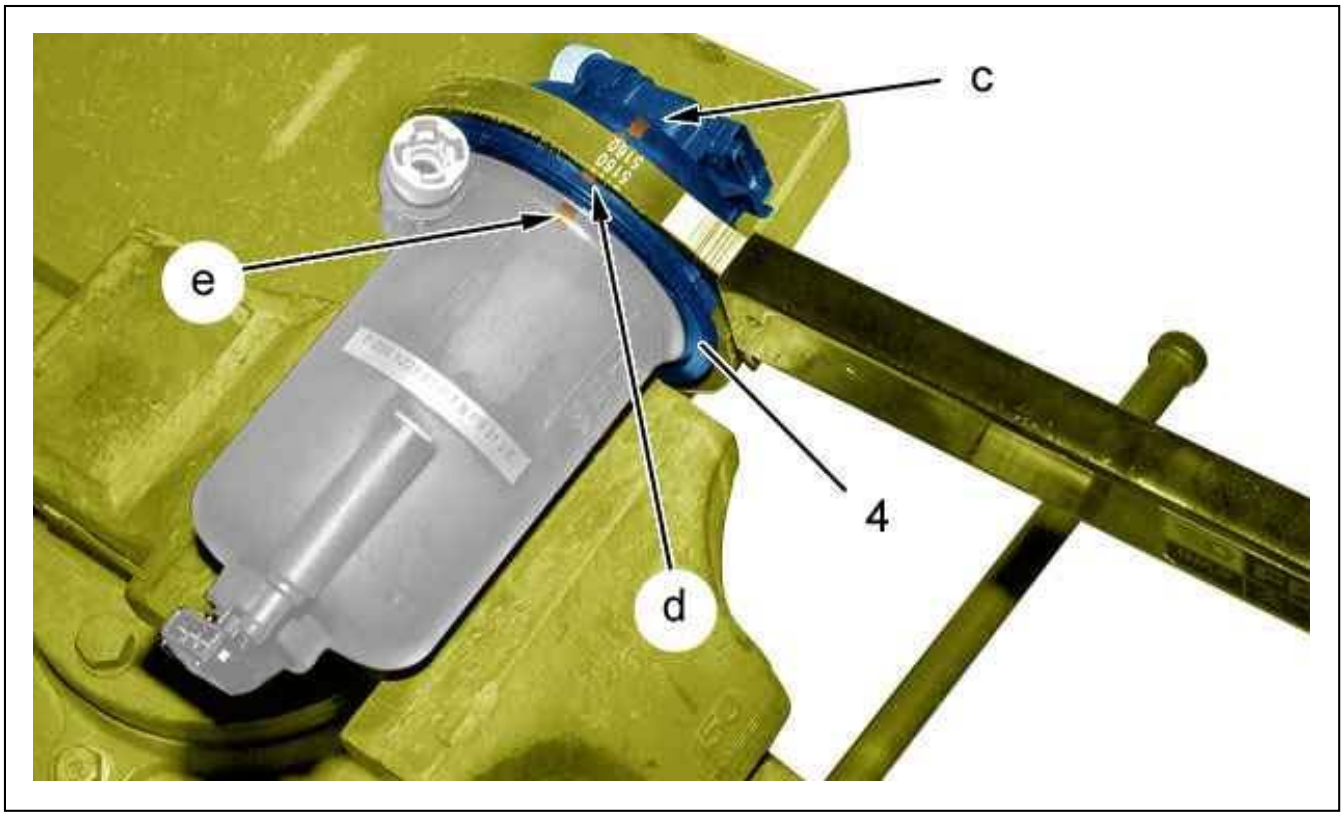

Figure : B1HG2R9D

Mark a reference (at "d") on the ring (4) between the references (At "c" and "e") .
Loosen the sleeve (4) ; Using a pipe wrench (on a workbench).
Remove the filter element.

3. Cleaning the fuel filter

Pour the diesel filter bowls cleaning product index "N3" into the cleaning tray.
Clean the fuel filter (2) ; Using a paint brush .
Drain the fuel filter (2).
Dry and wipe the fuel filter (2) ; Using a lint-free cloth (available from Replacement Parts).

4. Refitting

CAUTION : Open the sachet containing the new filter element just before refitting.

Fit the new filter element .
Tighten the sleeve (4) until the marks " c ", " d " and " e " are aligned ; Using a pipe wrench.
Refit : The fuel filter (2).
Connect :

- The connector (at "a")
- The connector (at "b") (according to equipment)

Remove :

- The tool [0188-T] from pipes (1) and (3)
- Tool [1520] from the pipes of the fuel filter (2)

Connect the pipe (1).

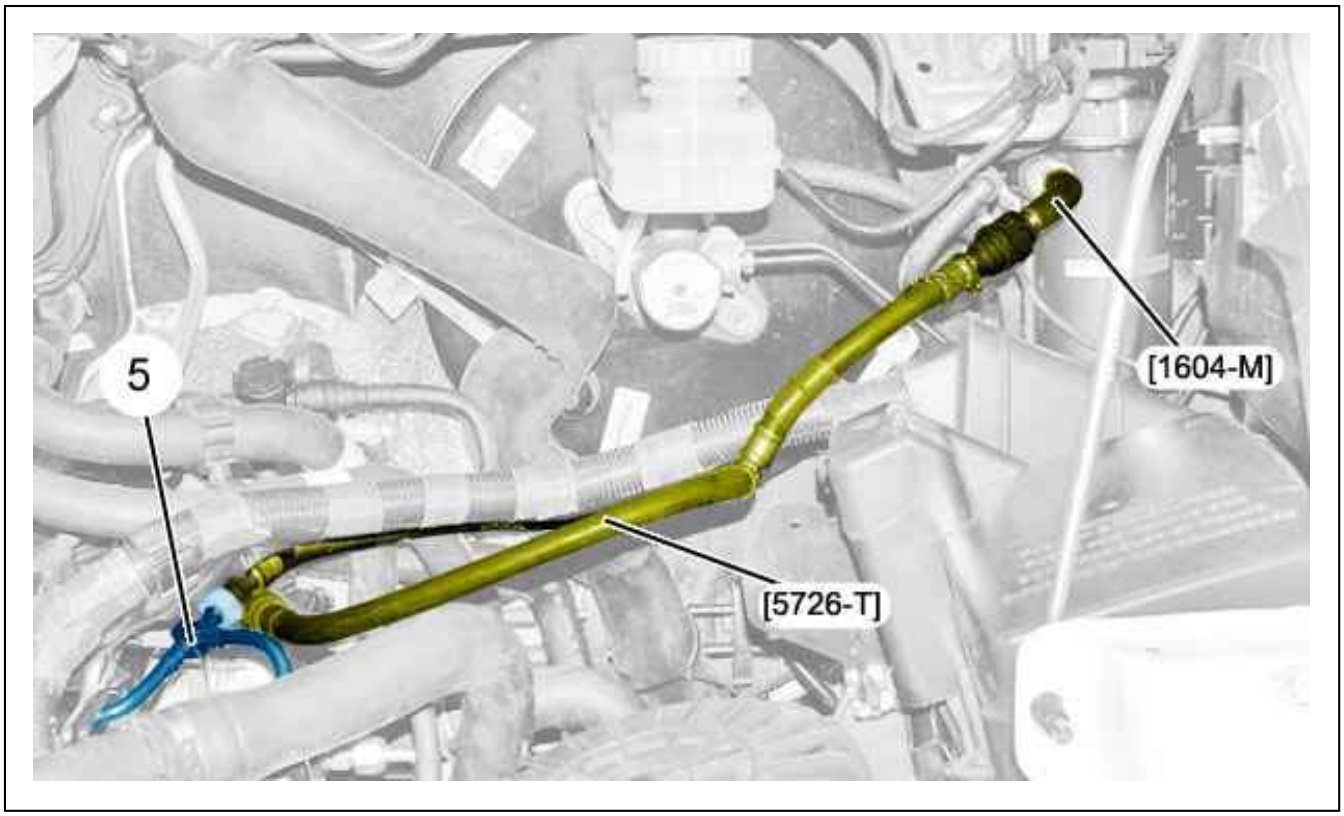

Figure : B1HG2RAD

Connect the male union (Ø 10 mm) of the tool [1604-M] in place of the pipe (3).
Uncouple the fuel return pipe (5).
Insert the unions (Ø 8 mm) of tool [5726-T] instead of the fuel return pipe (5).
Couple together the unions (10 mm diameter) of the tools [5726-T] and [1604-M].

CAUTION : Perform the operations to be carried out following reconnection of the battery.

Reconnect the battery.
Switch on the ignition 10 times in succession without starting to prime the fuel circuit.
Remove tools [5726-T] and [1604-M].
Couple up :

- The tube (3)
- The fuel return pipe (5)

5. Bleed procedure / Checking for leaks

Start the engine.
Check the absence of leaks.

CAUTION : Declutch and accelerate fully at the same time for 3 minutes.

N.B. : The engine speed is limited to 2500 rpm in clutch anti-centrifugation strategy and the fuel pressure is regulated.

Check the absence of leaks.
Carry out a road test.
Check the absence of leaks.

6. Bleed during service (presence of water)



Figure : B1HG2RBD

Place a draining tray under the engine.
Couple a translucent pipe reaching as far as the drain tray (at "f") (if necessary).
Open the bleed screw (6).
Switch on the ignition 10 times in succession over a period of 5 seconds, without starting the engine, this to prime the fuel circuit.
Close the bleed screw (6).
Uncouple and remove the translucent pipe (If necessary).
Refit the under-engine protection .

REMOVING - REFITTING : TURBOCHARGER AIR COOLER

ESSENTIAL : Observe the safety and cleanliness recommendations.

1. Tooling

Equipment : Drain tray.

tool	Reference	Designation
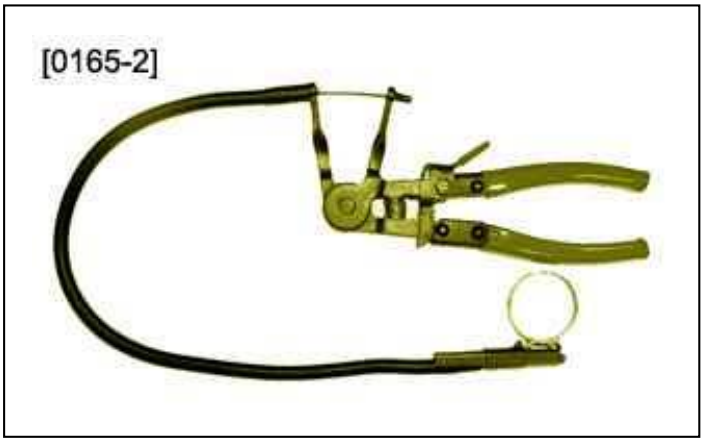 Figure : E5AI007T	[0165-2]	Cable pliers for flexible clips

2. Removing

Place the vehicle on a 2-post lift.

Remove :

- The grille (see the relevant operation)
- The central front bumper

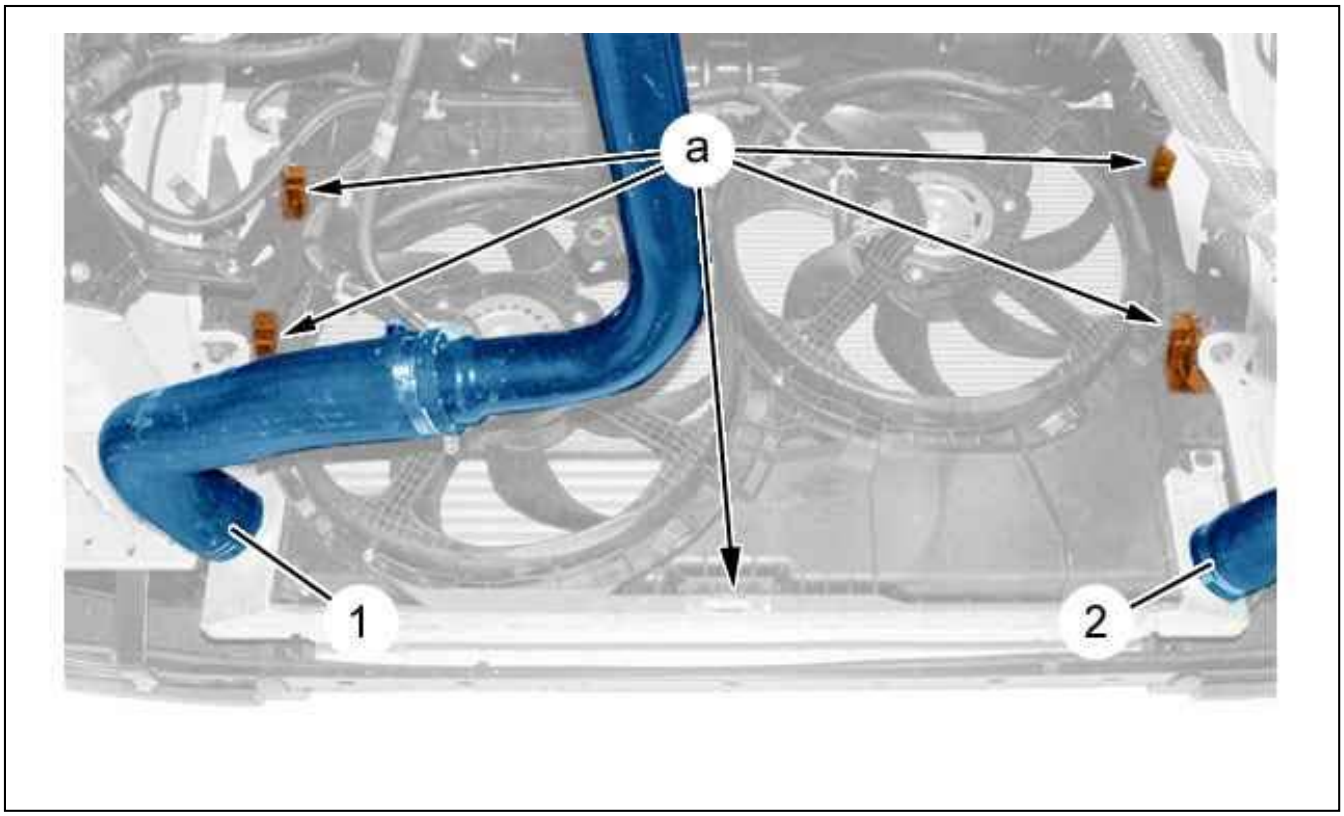

Figure : B1GP0JSD

N.B. : Place a draining tray under the engine.

Uncouple :

- The ducts (1), (2) from the turbocharger air cooler ; Using tool [0165-2]
- The radiators assembly (at "a")

Pull the radiators assembly upwards.

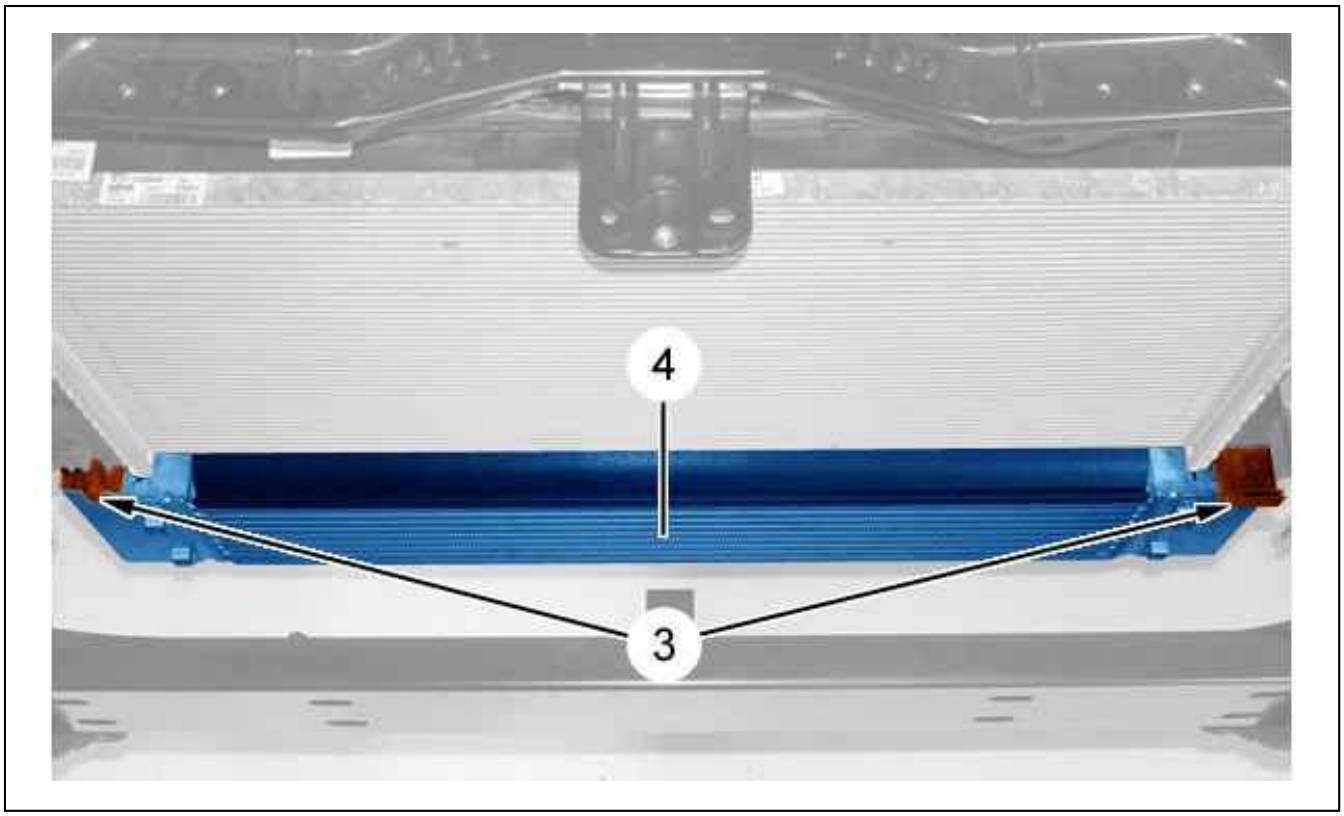

Figure : B1GP0JTD

Remove :

- The screws and the centring pins (3) from the turbocharger air cooler (4)
- The turbocharging air cooler (4)

3. Refitting

Refit :

- The turbocharging air cooler (4)
- The screws and the centring pins (3) from the turbocharger air cooler (4)
- The radiators assembly

Couple up :

- The radiators assembly (at "a")
- The ducts (1), (2) from the turbocharger air cooler (4) ; Using tool [0165-2]

N.B. : Replace all of the removed spring clips (if necessary).

Refit :

- The central front bumper
- The grille (see the relevant operation)
- The vehicle to its wheels

DRAIN - REFILL : FUEL TANK

ESSENTIAL : Observe the safety and cleanliness recommendations .

CAUTION : Depending on the vehicle, use the method that is most appropriate.

1. Tooling

Equipment : station for draining and filling fuel tanks (see garage equipement catalogue).

tool	Reference	Designation
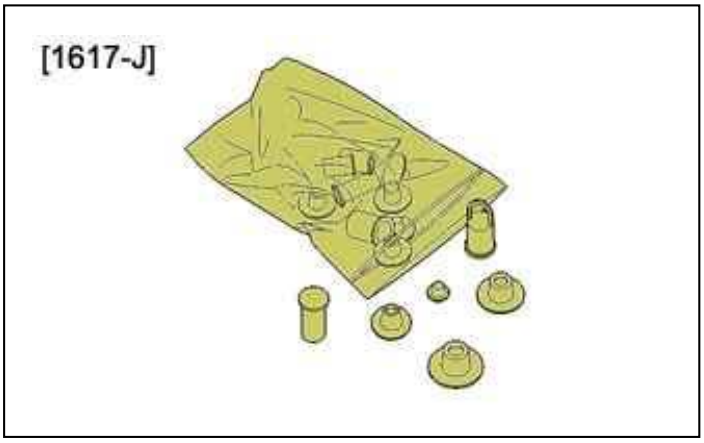 Figure : E5AB0FMT	[1617-J]	Set of plugs HDI
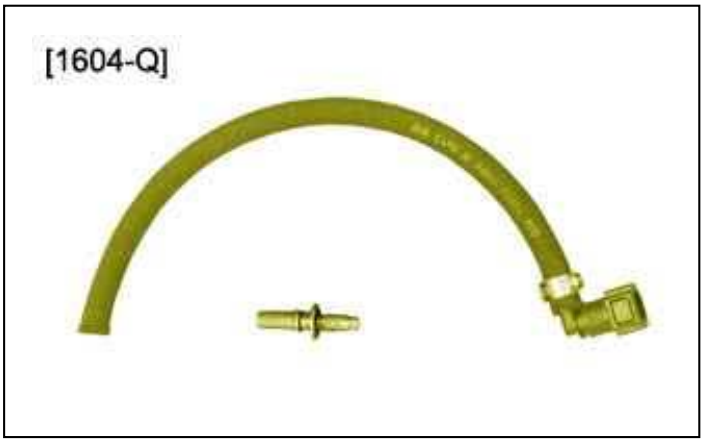 Figure : E5AB15YT	[1604-Q]	8 mm diameter union for low pressure take-off

2. Draining the fuel tank via the filler neck

CAUTION : Make sure you will observe the operating instructions of the drain unit.

CAUTION : Use a clean receptacle to collect the fuel.

2.1. Draining the fuel tank

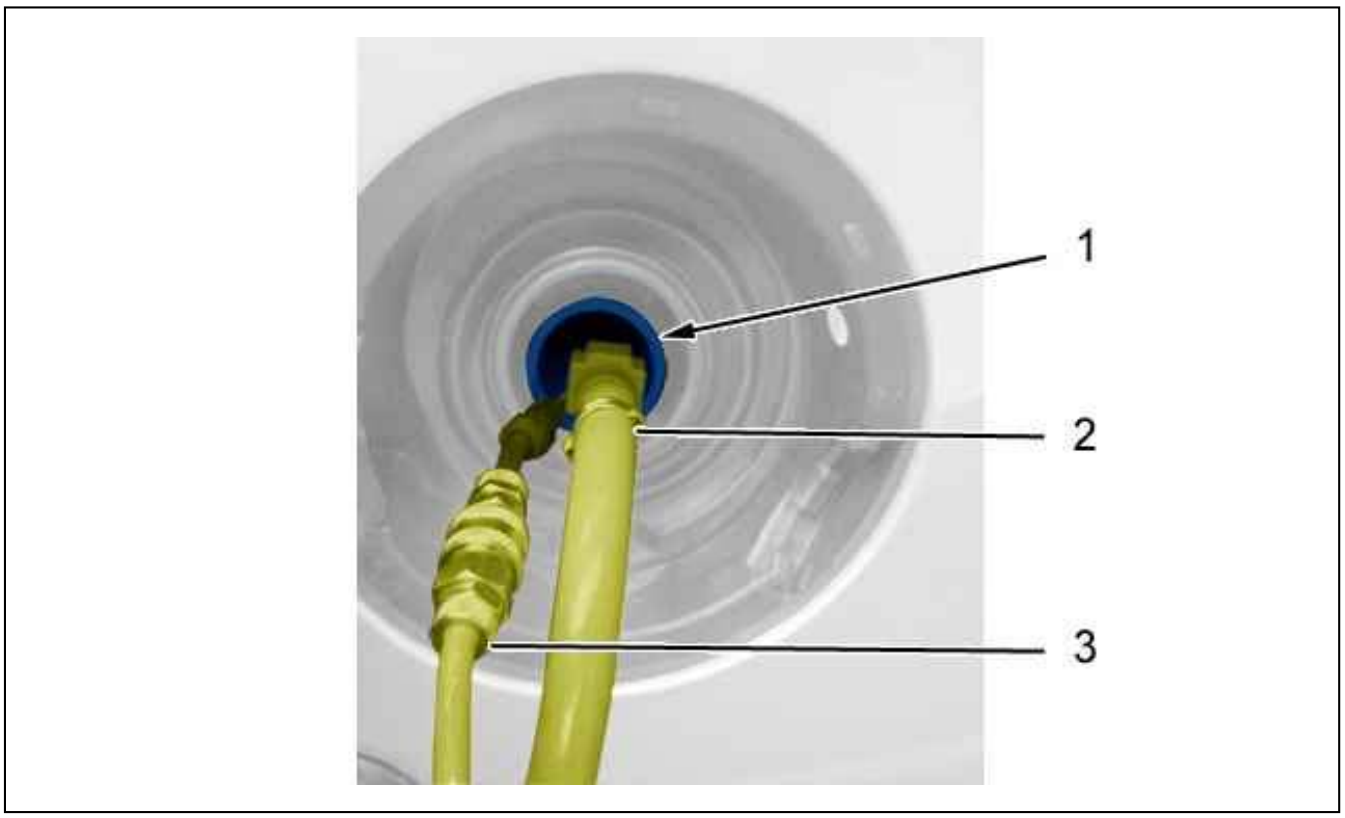

Figure : B1HI00KD

CAUTION : This operation should be carried out with the ignition switched off in order not to interfere with the functioning of the fuel gauge.

Connect plunger pipe (1) to suction pipe (2).
Position suction pipe (2) in fuel tank filler neck .
Couple up The fuel vapour re-induction pipe (3).
Suction the fuel ; Using the equipment .
Uncouple The fuel vapour re-induction pipe (3).
Remove the suction pipe (2) from the fuel tank filler neck (1).
Disconnect plunger pipe (1) from suction pipe (2).

2.2. Fuel filling

CAUTION : If the fuel recovered is polluted, use the strainer when filling.

Fill the tank ; Using the equipment .

3. Draining the fuel tank through the opening of the fuel pump and gauge assembly

3.1. Draining the fuel tank

CAUTION : Protect the vehicle’s carpets and seats.

ESSENTIAL : Open the vehicle’s windows and doors while draining the fuel tank.

Remove the fuel pump gauge module .

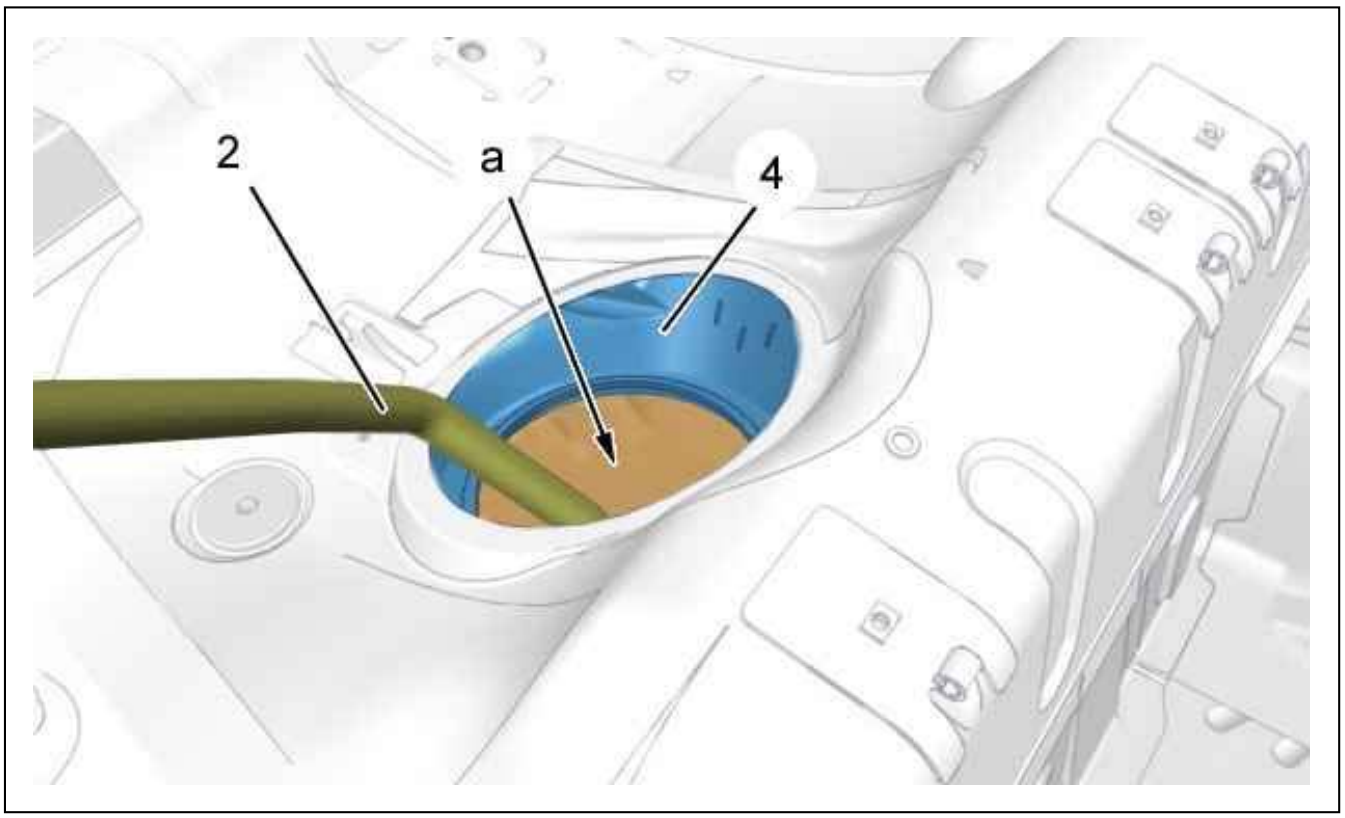

Figure : B1HI00ID

ESSENTIAL : Suction the fuel vapours from the pipe (3) ; Connect the vehicle to an approved gas extractor for this type of operation.

Position the suction pipe (2) via the opening of the fuel pump gauge module (at "a").
Drain the fuel tank (4) ; Using the equipment .

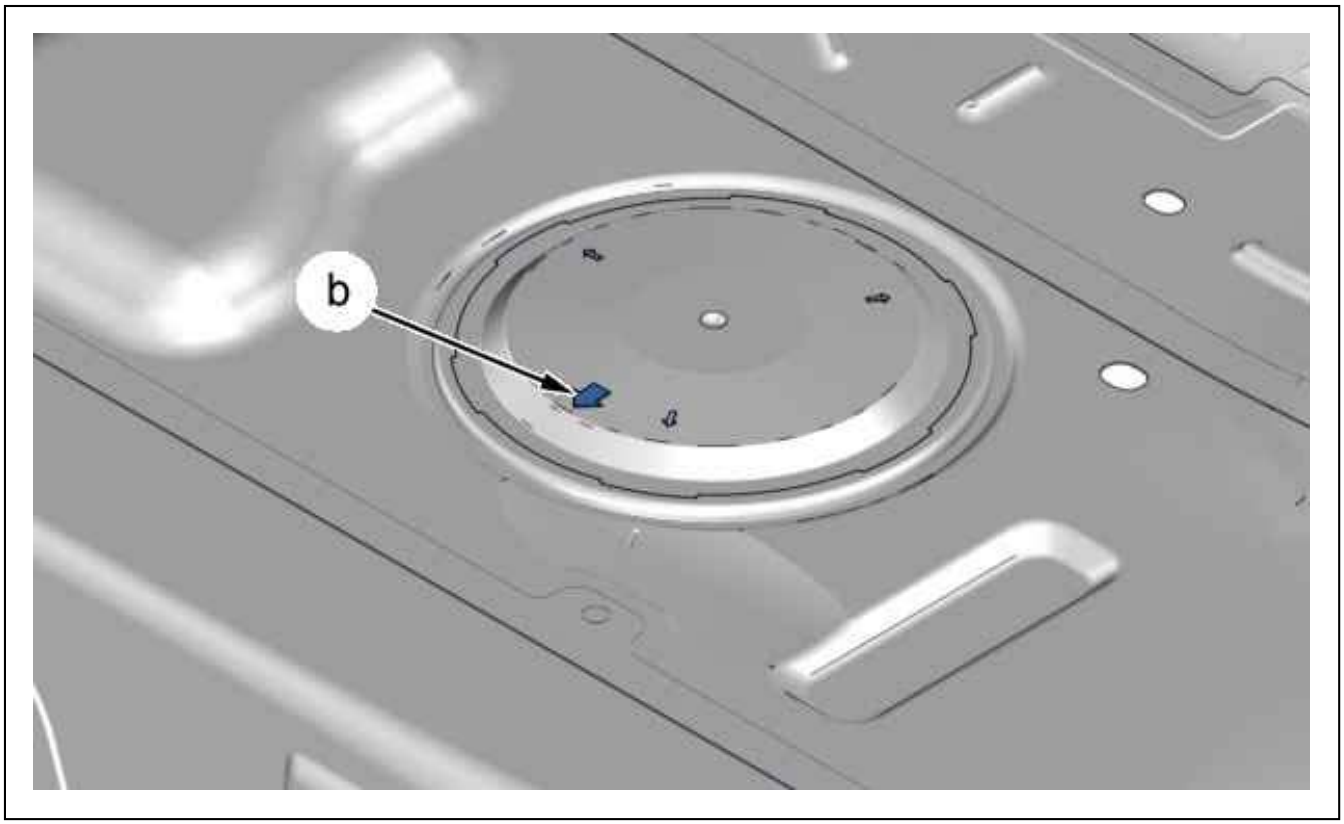

Figure : B1HI00UD

CAUTION : Repositioning of the access cap to the fuel pump-gauge assembly Towards the front of the vehicle (following the arrow) (at "b").

Refit the fuel gauge and pump assembly.

3.2. Special features of vehicles fitted with a two-compartment fuel tank

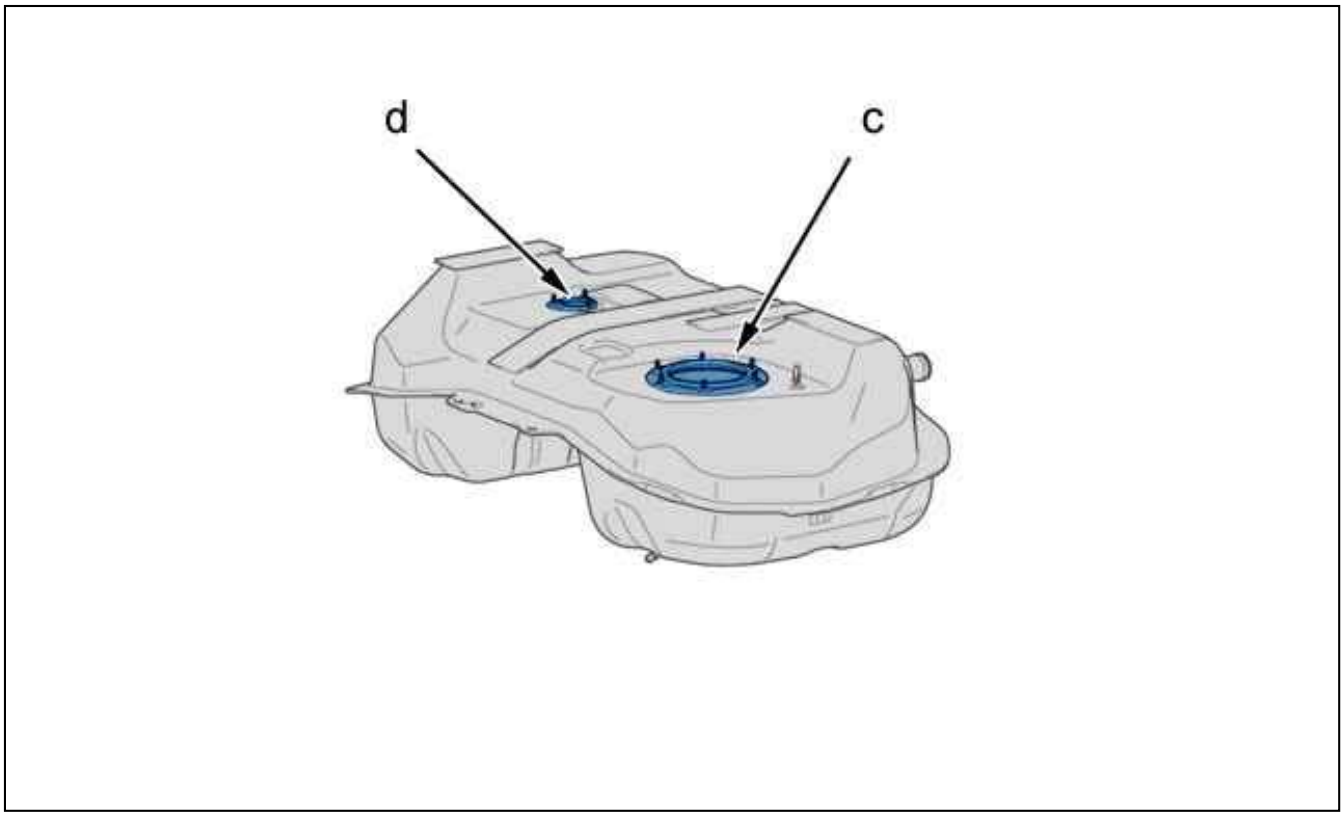

Figure : B1HI00VD

For certain vehicles, the 2 compartments of the fuel tank must be drained.
Remove the fuel pump gauge module .
Drain the reservoir (at "c", "d") ; Using the equipment .
Refit the 2 fuel pump/gauge module assemblies.

3.3. Fuel filling

CAUTION : If the fuel recovered is polluted, use the strainer when filling.

Fill the tank ; Using the equipment .

4. Draining the fuel tank via the injection rail supply (petrol)

4.1. Draining the fuel tank

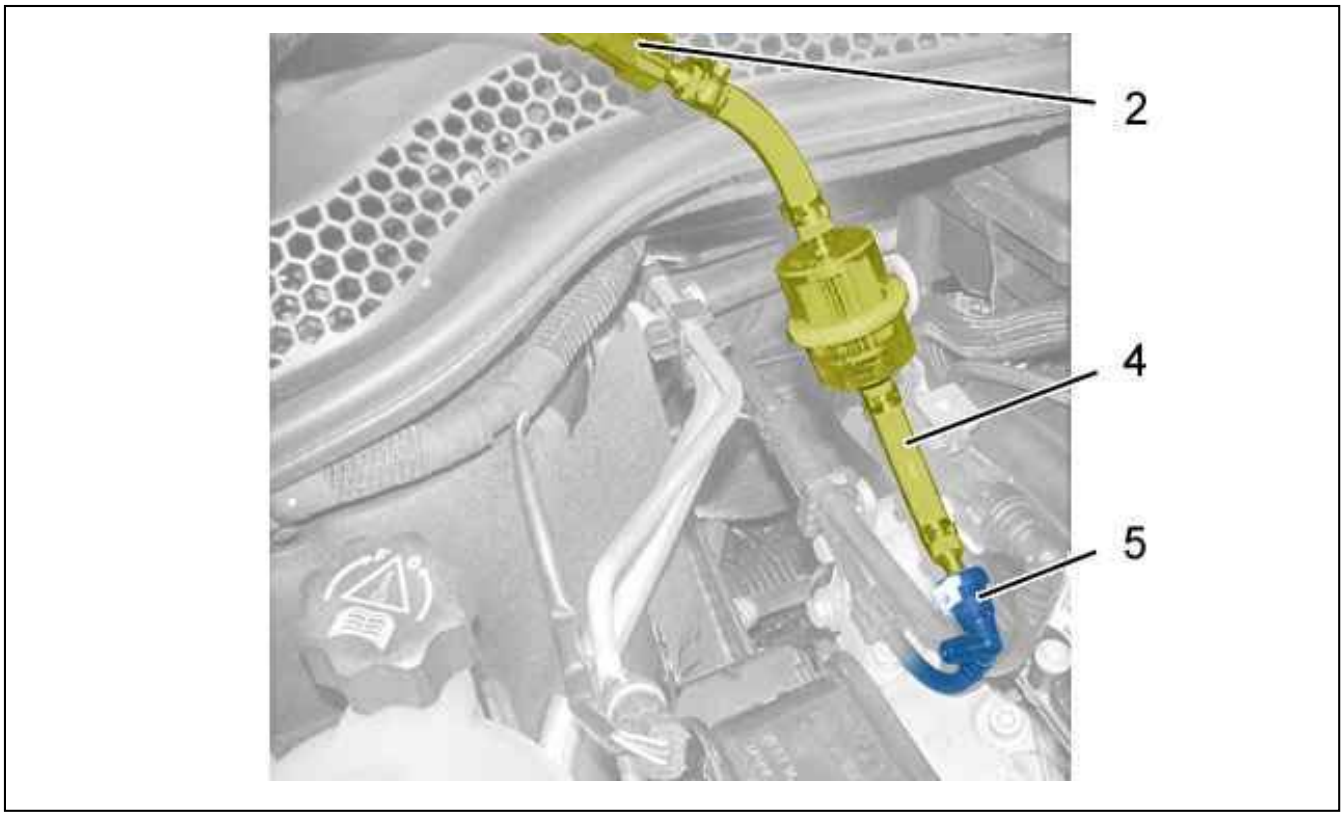

Figure : B1HI00LD

CAUTION : Drop the pressure in the fuel supply circuit.

Disconnect fuel injection rail supply hose (5) from the fuel injection rail.
Connect suction pipe (2) to union (4).
Connect union (4) to fuel injection rail supply hose (5).
Suction the fuel ; Using the equipment .
Disconnect union (4) from fuel injection rail supply hose (5).
Disconnect suction pipe (2) from union (4).
Connect fuel injection rail supply hose (5) to the fuel injection rail.

4.2. Fuel filling

CAUTION : If the fuel recovered is polluted, use the strainer when filling.

Fill the tank ; Using the equipment .

5. Draining the fuel tank by supplying the fuel high-pressure pump (engine 4N13)

5.1. Draining the fuel tank

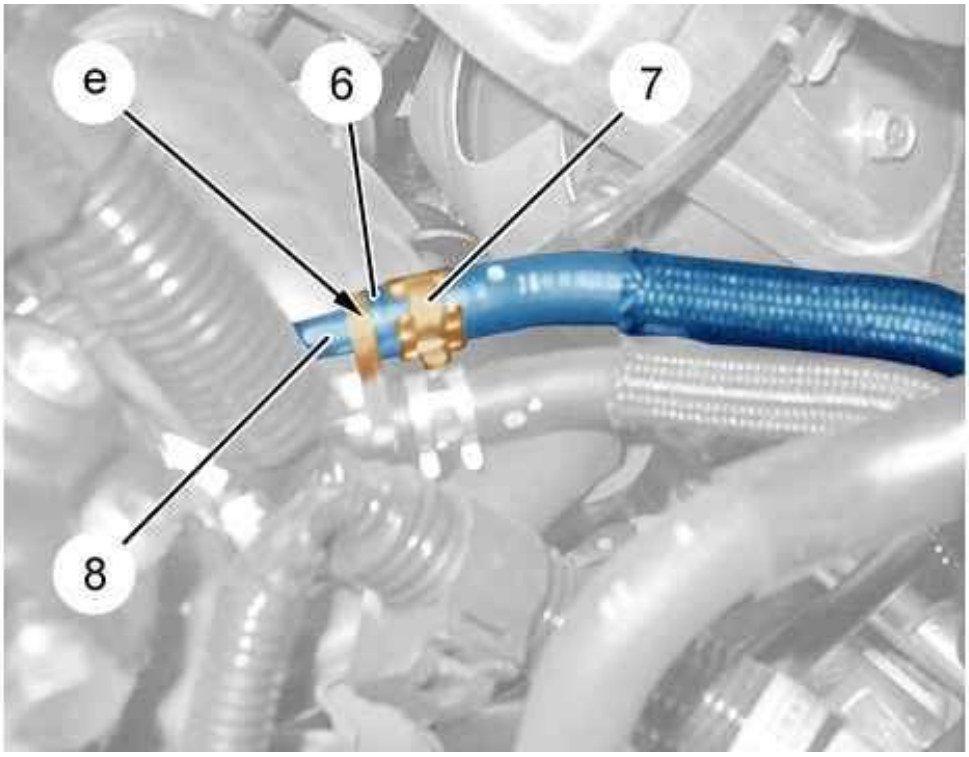

Figure : B1HI00WD

Remove the air filter housing .
Protect the surrounding area from any spray of fuel.
Push back the collar (7).
Uncouple the fuel supply pipe (6) (at "e").
Connect hose (6) to the end of the tool [1604-Q].
Put the clip (7) in place.
Block the pipe (8) ; Using tool [1617-J].

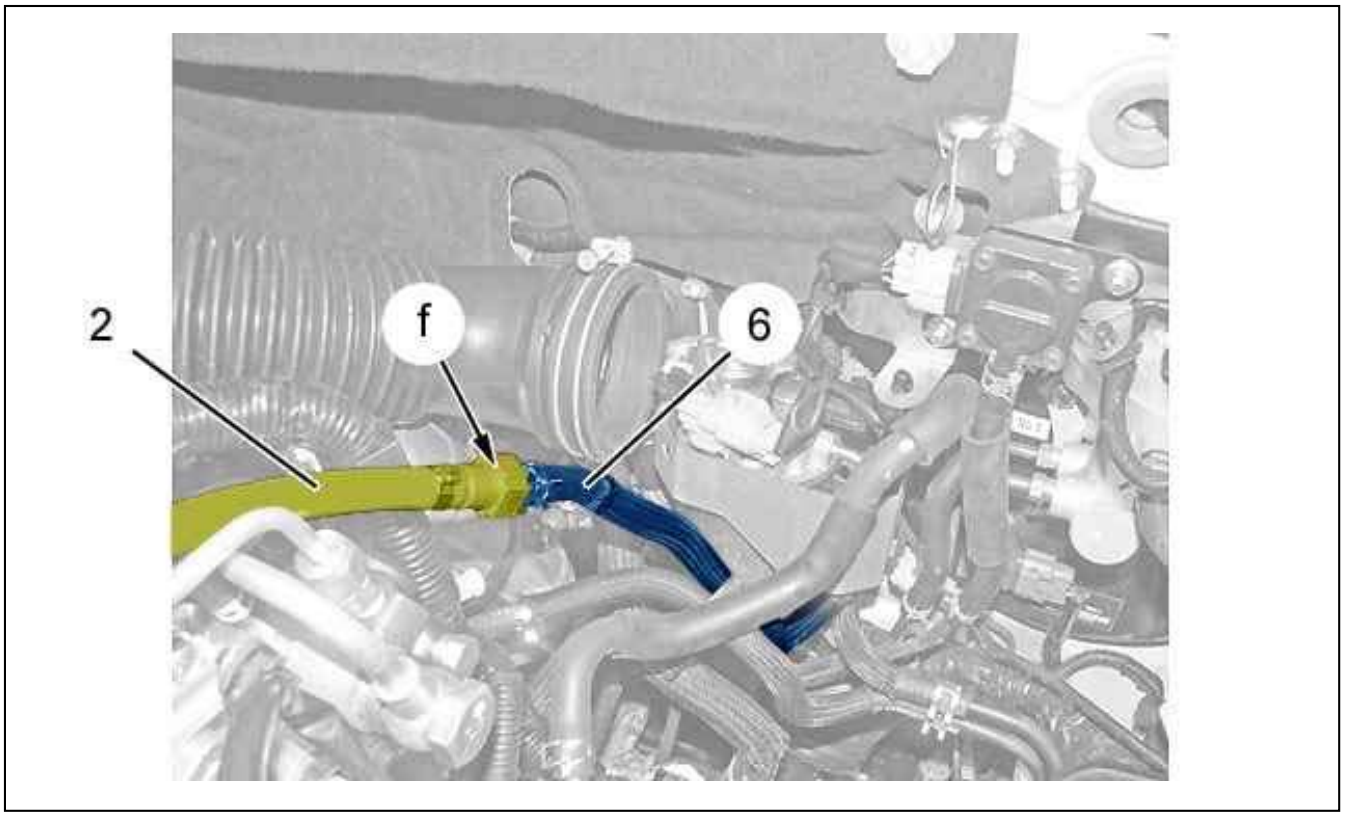

Figure : B1HI00XD

Connect suction pipe (2) to fuel supply hose (6) (at "f").
Suction the fuel ; Using the equipment .
Disconnect suction pipe (2) from fuel supply hose (6) (at "f").
Remove the tool [1617-J] from the pipe (8).
Push back the collar (7).
Disconnect hose (6) from the end of the tool [1604-Q].
Connect the fuel supply pipe (6) (at "f").
Put the clip (7) in place.
Refit the air filter housing .

5.2. Fuel filling

CAUTION : If the fuel recovered is polluted, use the strainer when filling.

Fill the tank ; Using the equipment .

6. Draining the fuel tank (DV6C, DV6D, DV6E, DV6UC, DV6CM, DV6DM, DV6DUM et DV6EM et DV4C version)

6.1. Draining the fuel tank

Protect the surrounding area from any spray of fuel.
Uncouple the fuel supply pipe (Fuel filter outlet).

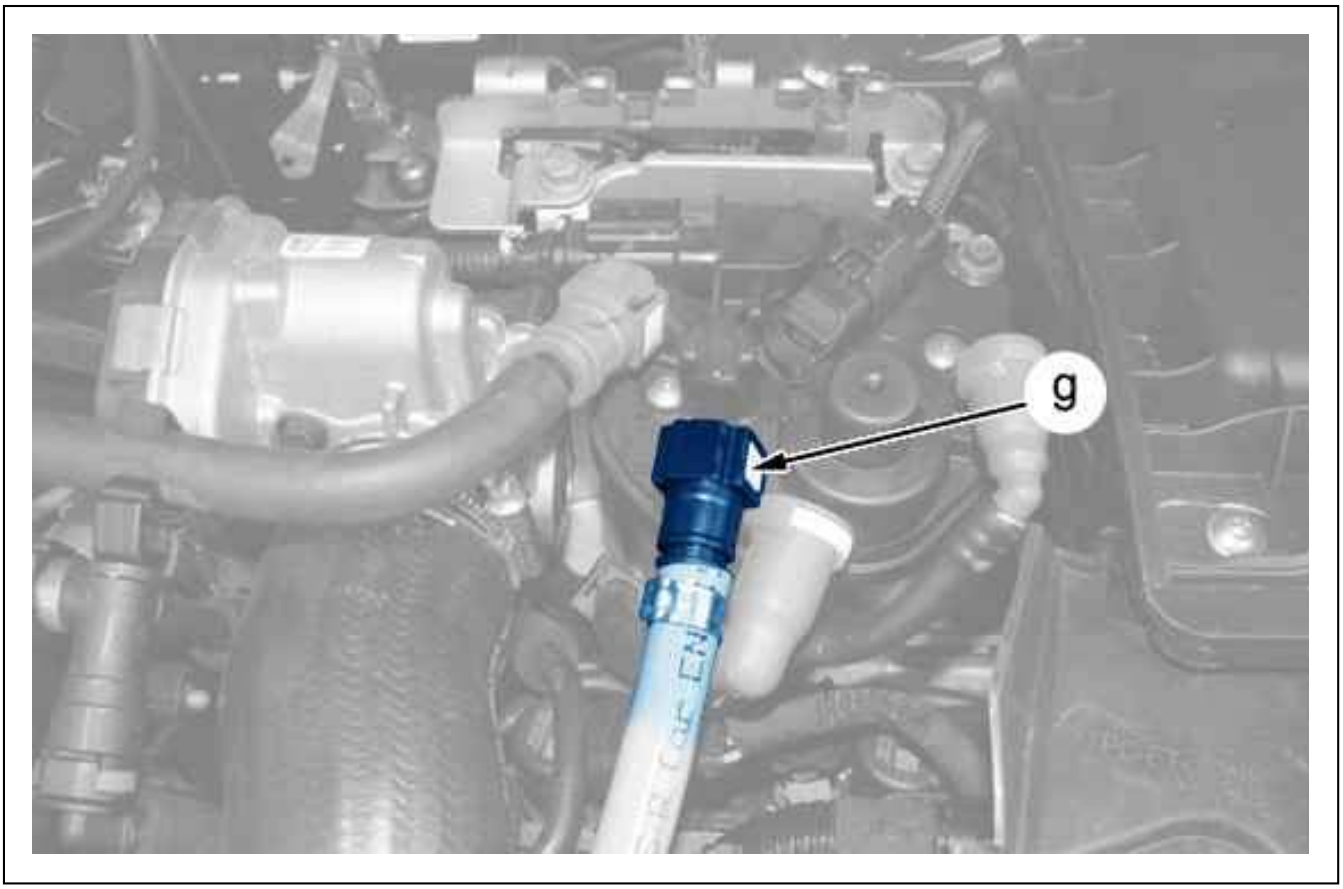

Figure : B1HI00YD

Couple up the filling station click-fit union (at "g").
Suction the fuel ; Using the equipment .
Uncouple the filling station click-fit union (at "g").
Connect the fuel supply pipe .

6.2. Fuel filling

CAUTION : If the fuel recovered is polluted, use the strainer when filling.

Fill the tank ; Using the equipment .

7. Special features of vehicles fitted with a particle filter

CAUTION : The fuel recovered is not compatible with engine versions that do not have particle filters.

The fuel which is retrieved contains an additive for particulate emission filter requirements.
The quantity of additive injected into the fuel tank corresponds to the quantity of fuel and is defined by the fuel additive adding ECU.
Put back all of the fuel recovered.
If the fuel taken during the draining operation is not re-usable (water or impurities present), proceed as follows :

- Place the cap on the fuel tank
- Switch on the ignition for 5 seconds (minimum)
- Switch off the ignition
- Remove the plug
- Refill the tank

N.B. : This operation enables the fuel additive adding ECU to inject the quantity of additive corresponding to the quantity of diesel added.

CLEANING : FUEL HIGH PRESSURE COMMON INJECTION RAIL UNIONS

ESSENTIAL : Observe the safety and cleanliness recommendations .

1. Tooling

Equipment :

- Degreasing product (type SODIMAC)
- Brush
- Cleaning tray
- Vacuum extractor
- Round end-piece

2. Preliminary operations

ESSENTIAL : Respect the safety and cleanliness recommendations that are specific to high pressure diesel injection (HDi) engines .

Disconnect the battery negative terminal.
Protect the alternator.

3. Method of operation

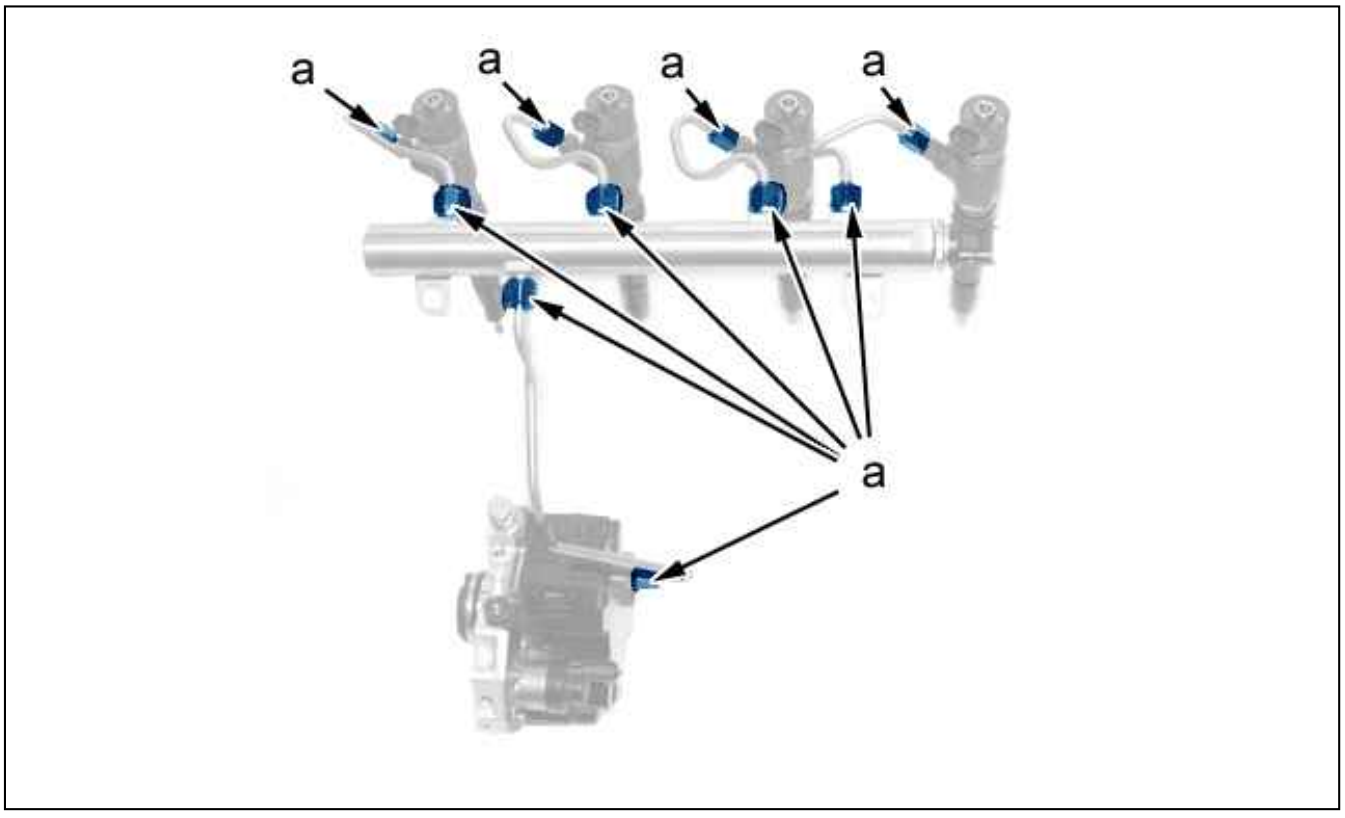

Figure : B1HP2V7D

Clean the repair areas (as "a") :

- Pour the degreaser into the cleaning tray
- Dip the brush in the degreasing product
- Clean the zones "a" while using the suction device at the same time ; Using a suction device fitted with a round adaptor

Clean the suction device after use.
Remove the alternator protector.

CAUTION : Perform the operations to be carried out following reconnection of the battery.

Reconnect the battery.

CLEANING : FUEL HIGH PRESSURE COMMON INJECTION RAIL UNIONS

1. Tooling

Equipment :

- Degreasing product SODIMAC N°35
- Brush
- Cleaning tray
- Vacuum extractor
- Round end-piece

2. Preliminary operations

Disconnect the battery negative terminal.
Protect the alternator.

3. Method of operation

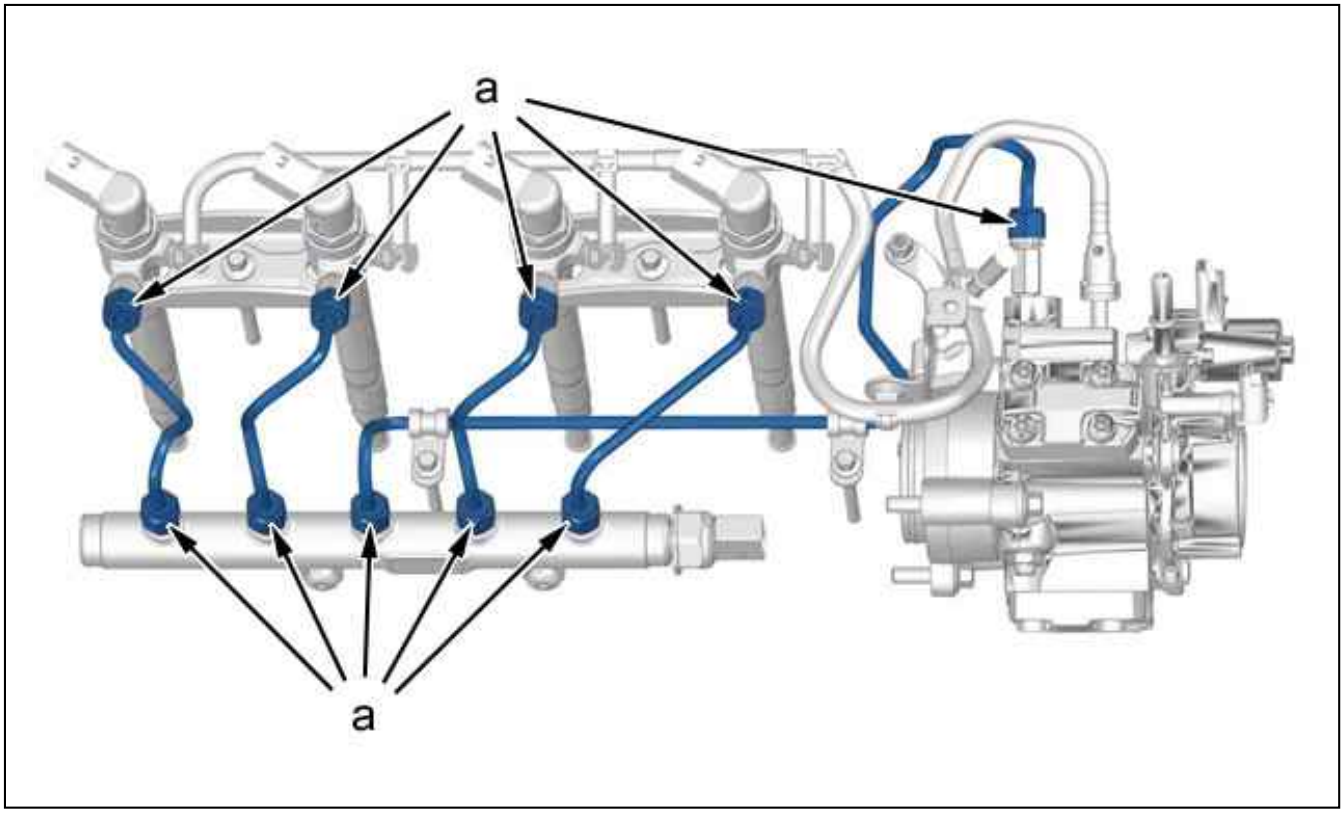

Figure : B1HK1003D

Clean the repair areas (at "a") :

- Pour the degreasing product SODIMAC N°35 into the cleaning tray
- Soak the brush in the degreasing product SODIMAC N°35 or equivalent
- Clean the zones "a" while using the suction device at the same time ; Using the vacuum cleaner and the round end piece
- Clean the suction device after use

TIGHTENING TORQUES : EXHAUST SYSTEM

CAUTION : Observe the tightening torque values.

1. exhaust silencer

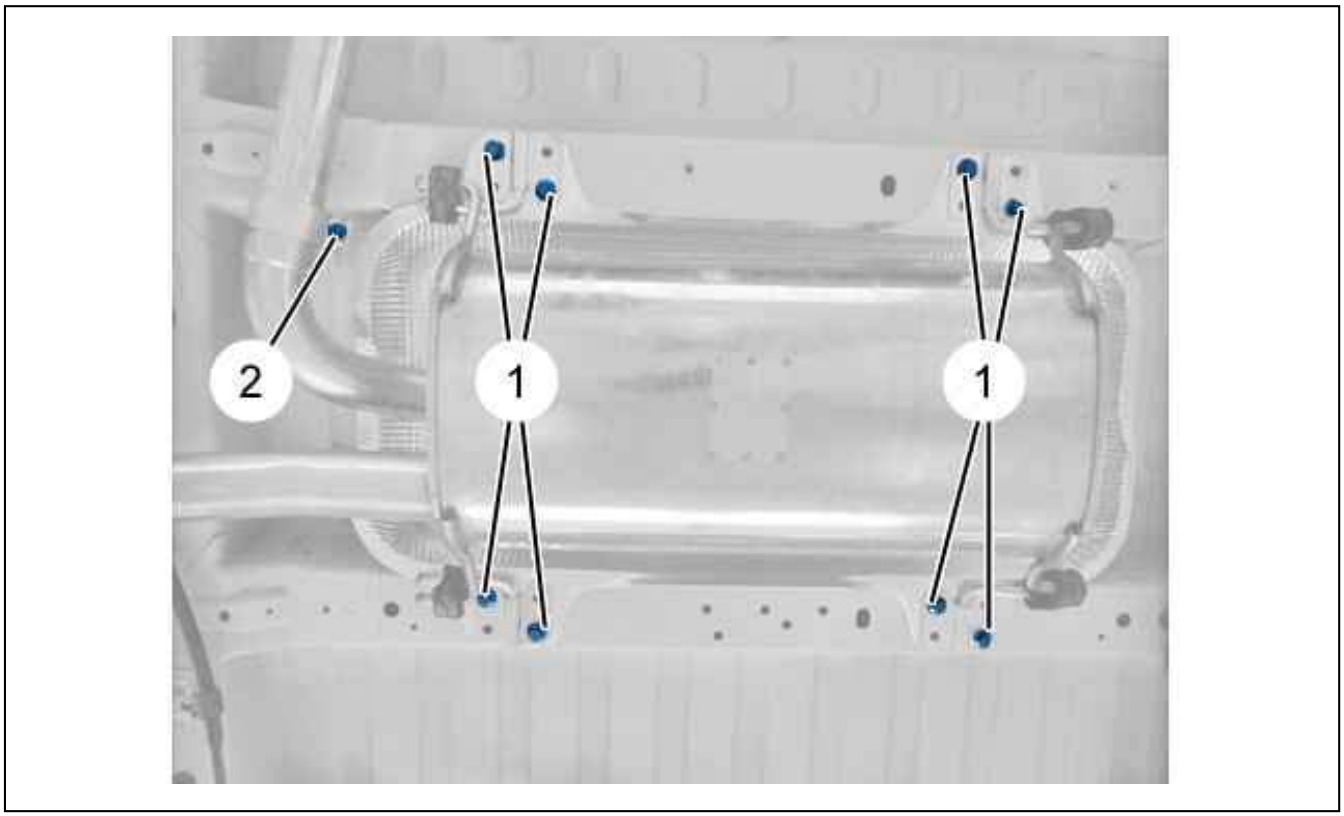

Figure : B1JB0ETD

Reference	Description	Tightening torque (daNm)
(1)	fixing screws : Rear silencer mounting	2,6 daNm
(2)	fixing screws : Exhaust clip	4,5 daNm

2. Catalytic converter / Particle filter

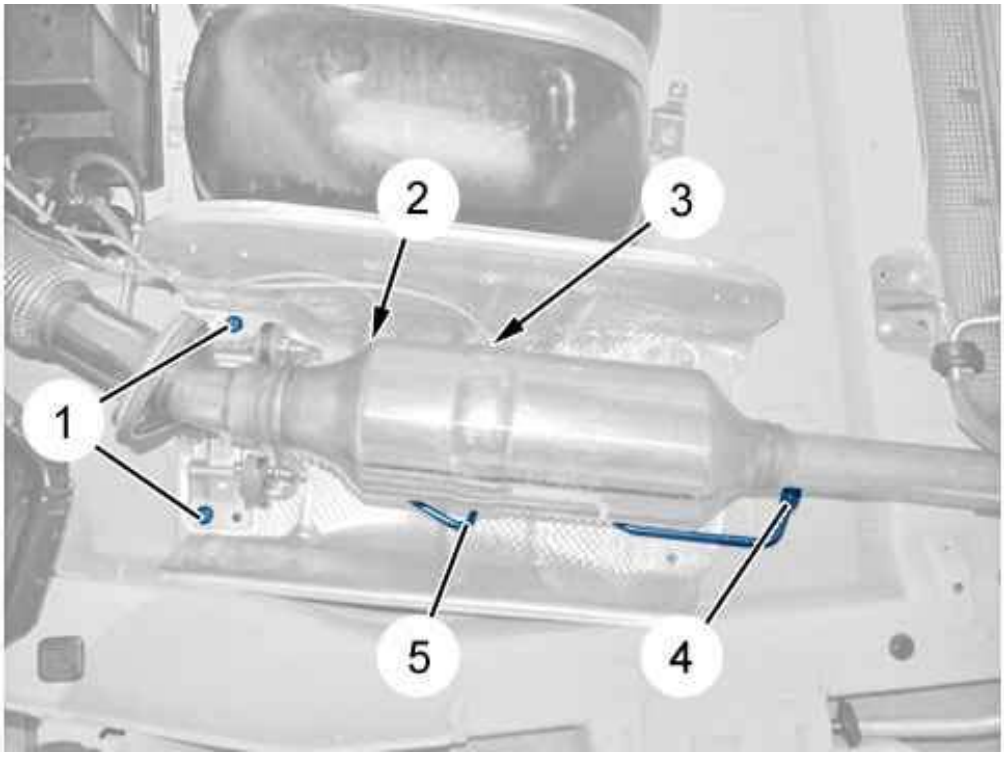

Figure : B1JB0EUD

Reference	Description	Tightening torque (daNm)
(1)	Hanger fixing bolt	2,6 daNm
(2)	Temperature sensor (upstream)	4,5 daNm
(3)	Temperature sensor (downstream)	4,5 daNm
(4)	Pressure take-off (downstream)	2 daNm
(5)	Pressure take-off (upstream)	2 daNm

3. Pre-catalyser

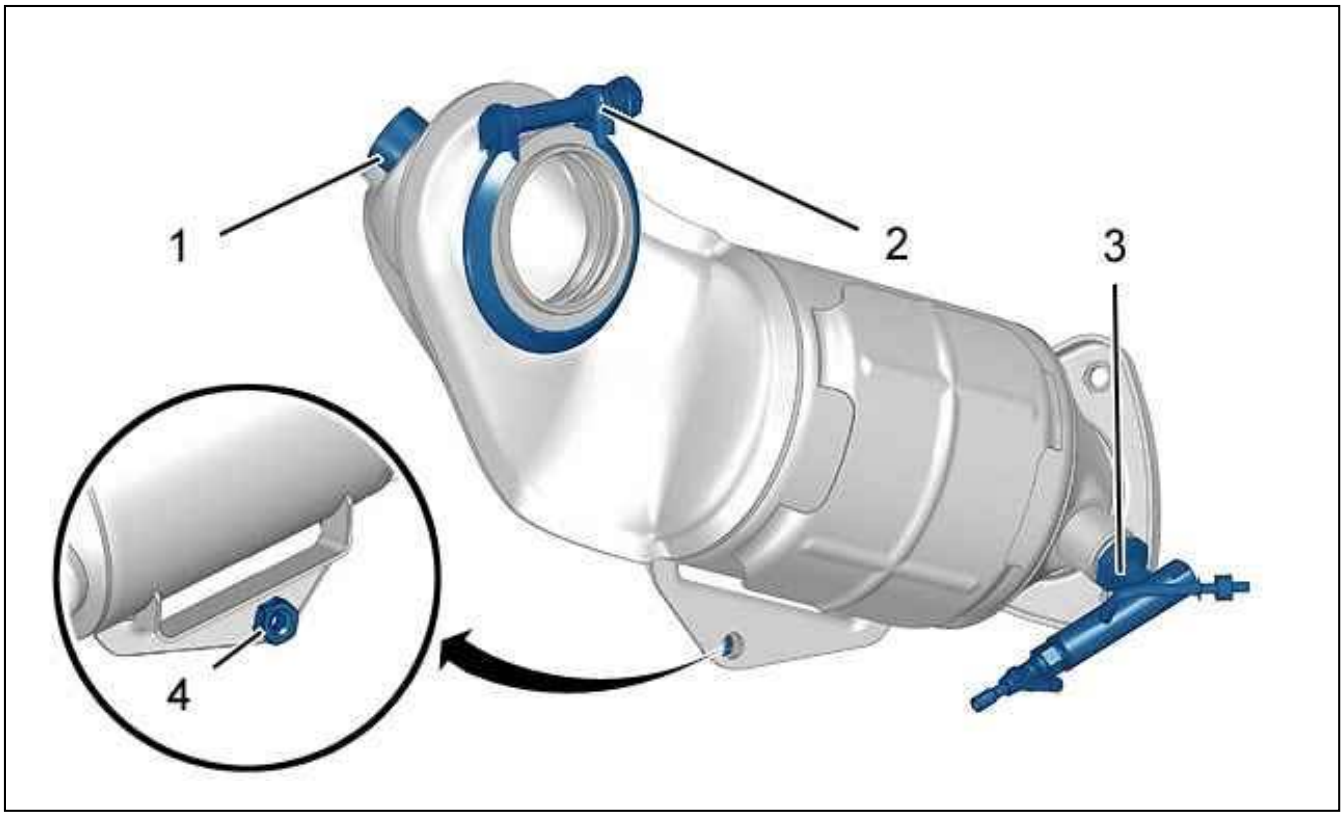

Figure : B1JB0EVD

Reference	Description	Tightening torque (daNm)
(1)	Oxygen sensor	4,5 daNm
(2)	Turbocharger clip	2,3 daNm
(3)	Vaporiser	4,8 daNm
(4)	Fixing of pre-catalyser	2,5 daNm

4. Intermediate exhaust fixing

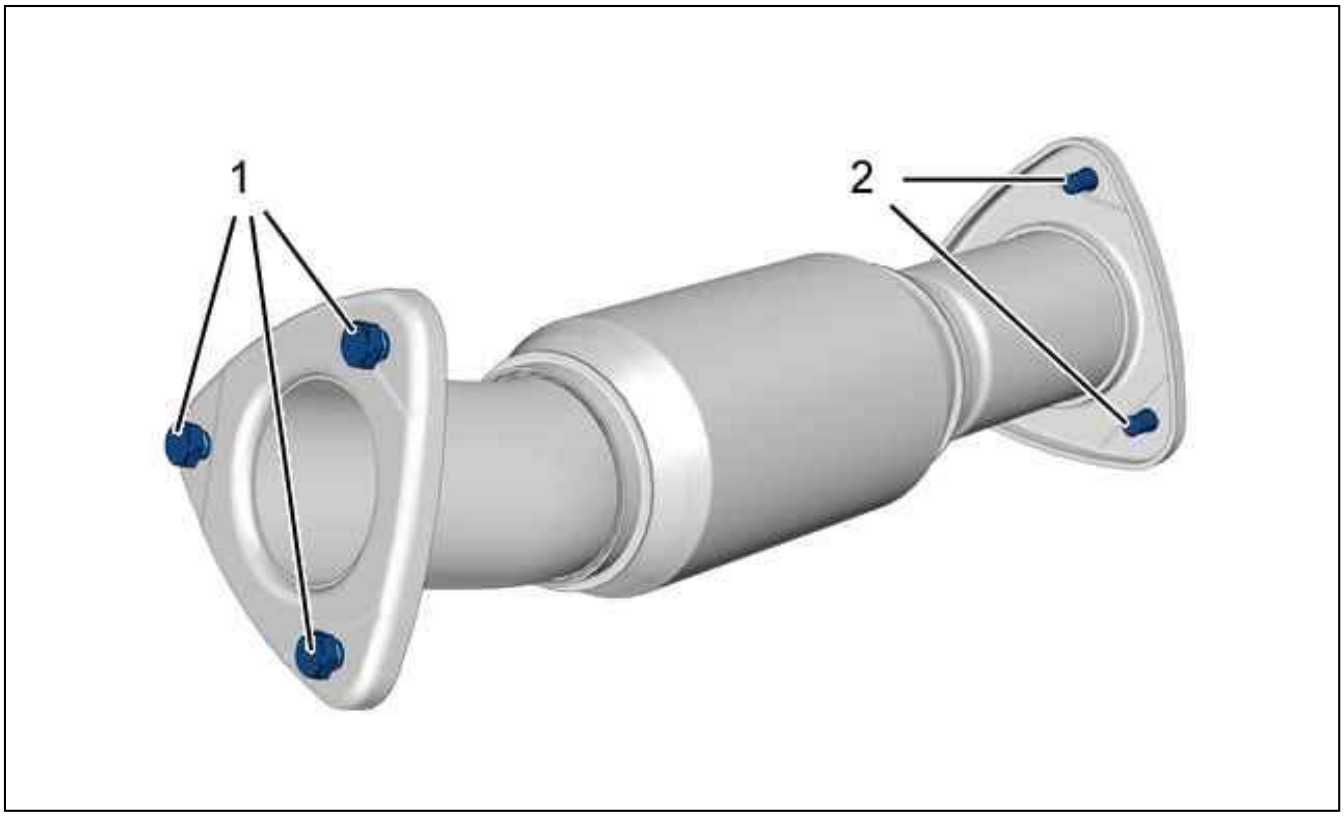

Figure : B1JB0EWD

Reference	Description	Tightening torque (daNm)
(1)	Fixing of intermediate exhaust on pre-catalyser	2,5 daNm
(2)	Fixing of intermediate exhaust on catalytic converter / particle filter	2,5 daNm

REMOVING - REFITTING : EXHAUST SYSTEM

ESSENTIAL : Observe the safety and cleanliness recommendations .

1. Tooling

Equipment : Component lift.

tool	Reference	Designation
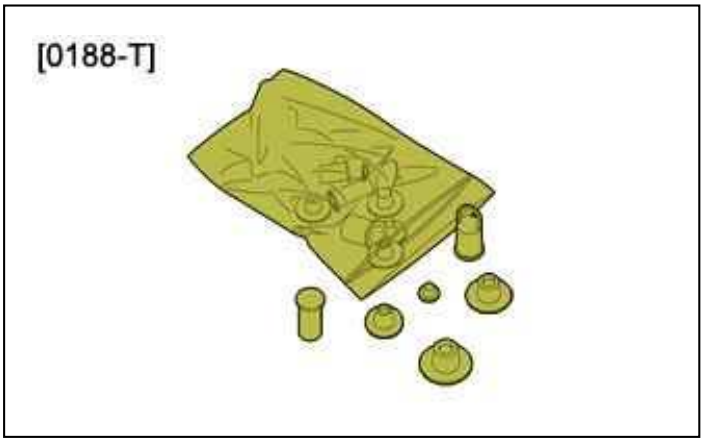 Figure : E5AB06IT	[0188-T]	plugs kit

2. Precautions to be taken

ESSENTIAL : Before carrying out any work on the exhaust system, wait for it to cool down.

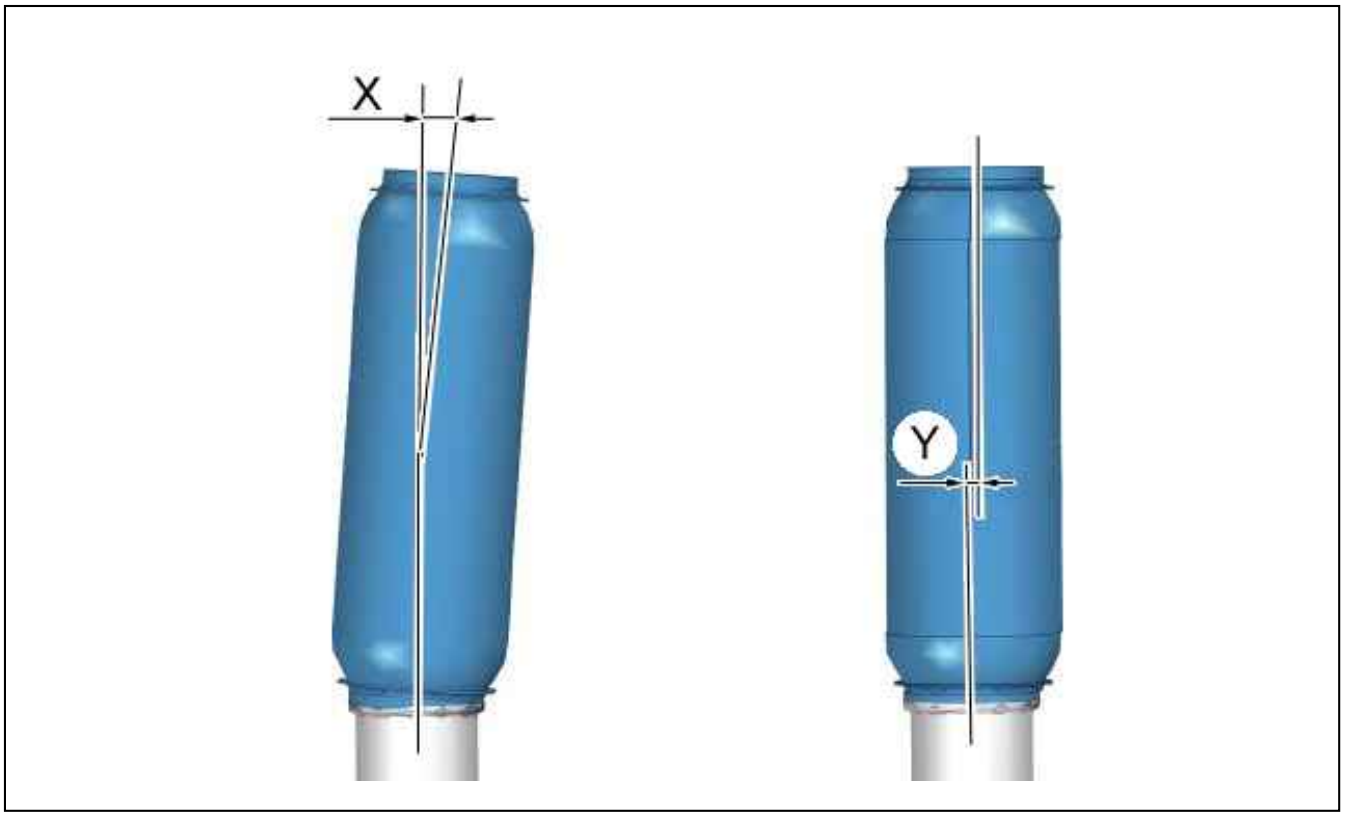

Figure : B1JG036D

Respect the precautions to be taken before repair :

- The front flexible pipe should be protected against any external mechanical interference
- The front flexible pipe should not come into contact with any corrosive products
- Do not deform the front flexible hose by more than 20° angular (X), 20 mm axial and 25 mm in shear (Y)
- Do not deform the front flexible hose by more than 3° angular (X), 0 mm axial and 3 mm in shear (Y) (Front flexible pipe in place)

CAUTION : Failure to observe these precautions results in a reduction of the service life of the front hose ; The uncoupling or removal of the exhaust line is essential for operations requiring lifting of the power train.

3. Replacement : exhaust silencer

3.1. Removing

Place the vehicle on a 2-post lift.

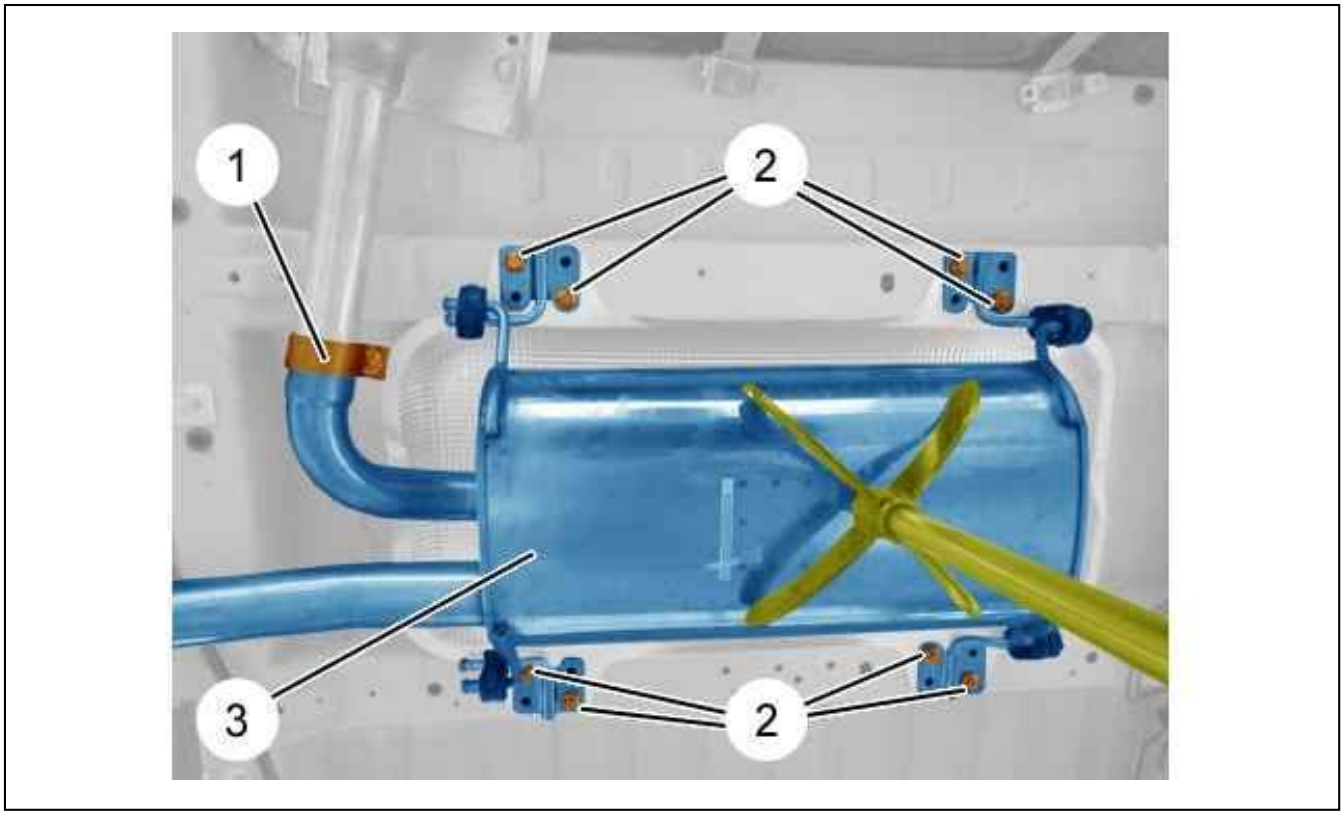

Figure : B1JG0MHD

Slacken the clip (1).
Place the component lift under the exhaust silencer (3).
Remove :

- The bolts (2) of the silencer flexible mountings (Exhaust silencer (3))
- The exhaust silencer (3) and its heat shield

3.2. Refitting

CAUTION : Adhere to the tightening torques .

Refit :

- The exhaust silencer (3) and its heat shield
- The bolts (2) of the silencer flexible mountings (Exhaust silencer (3))

Tighten the clip (1).

4. Replacement of the particle emission filter

4.1. Removing

Place the vehicle on a 2-post lift.
Disconnect the battery.

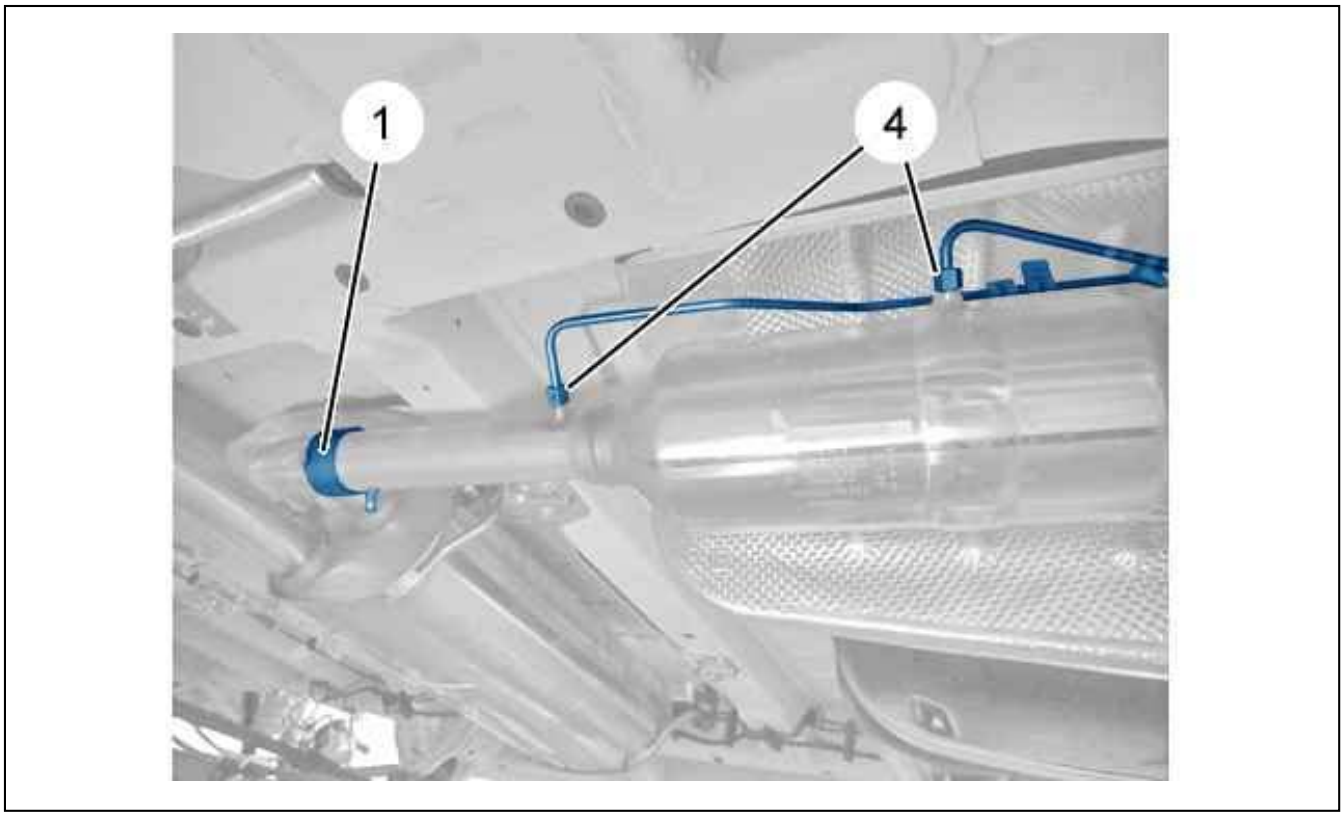

Figure : B1JG0MID

Remove the collar (1).

CAUTION : Note the direction and pairing of the pressure take-off pipes (4)(Metal pipes).

Uncouple : The pressure take-off pipes (4)(Metal pipes).

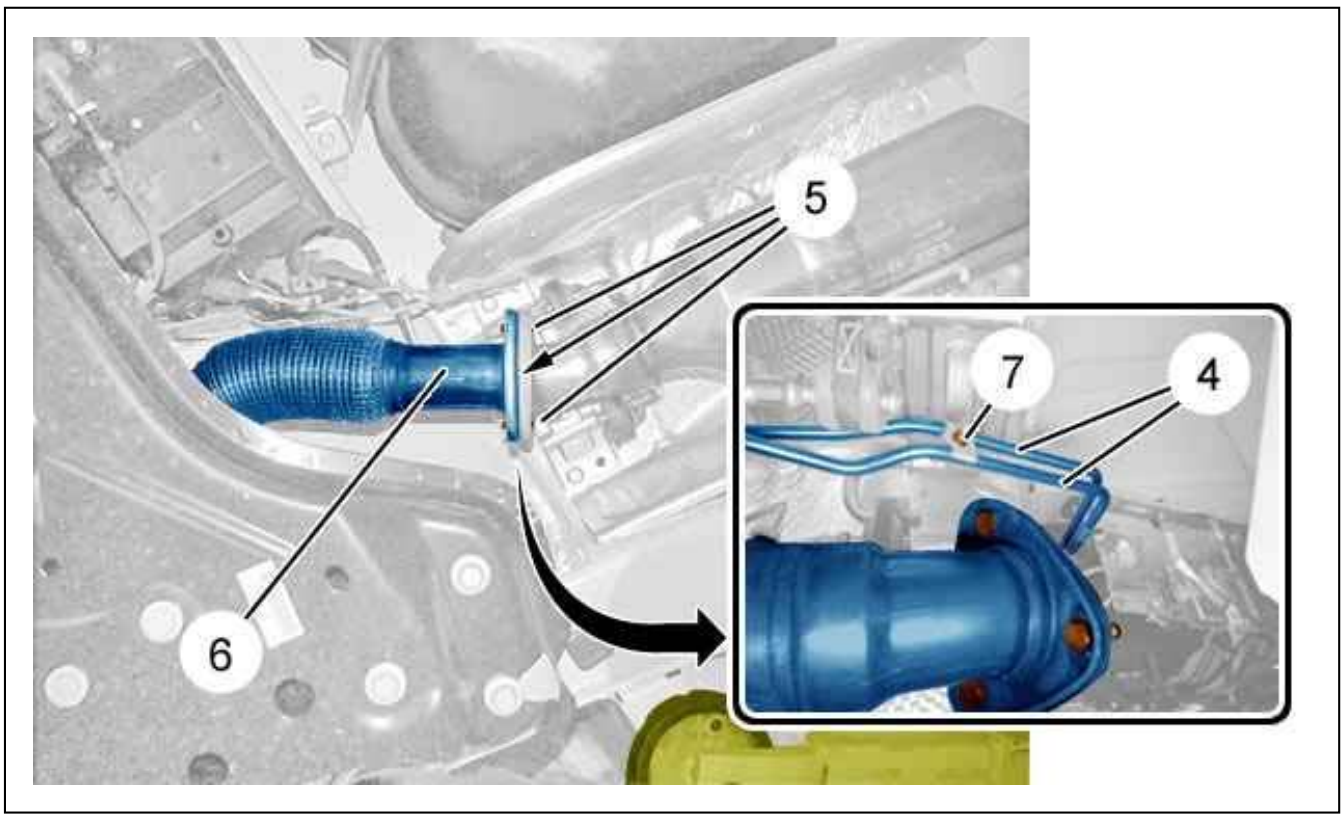

Figure : B1JG0MJD

Remove :

- The bolts (5) (Intermediate exhaust pipe (6))
- The nut (7)

Release :

- The intermediate exhaust pipe (6)
- The pressure take-off pipes (4) (Metal pipes)

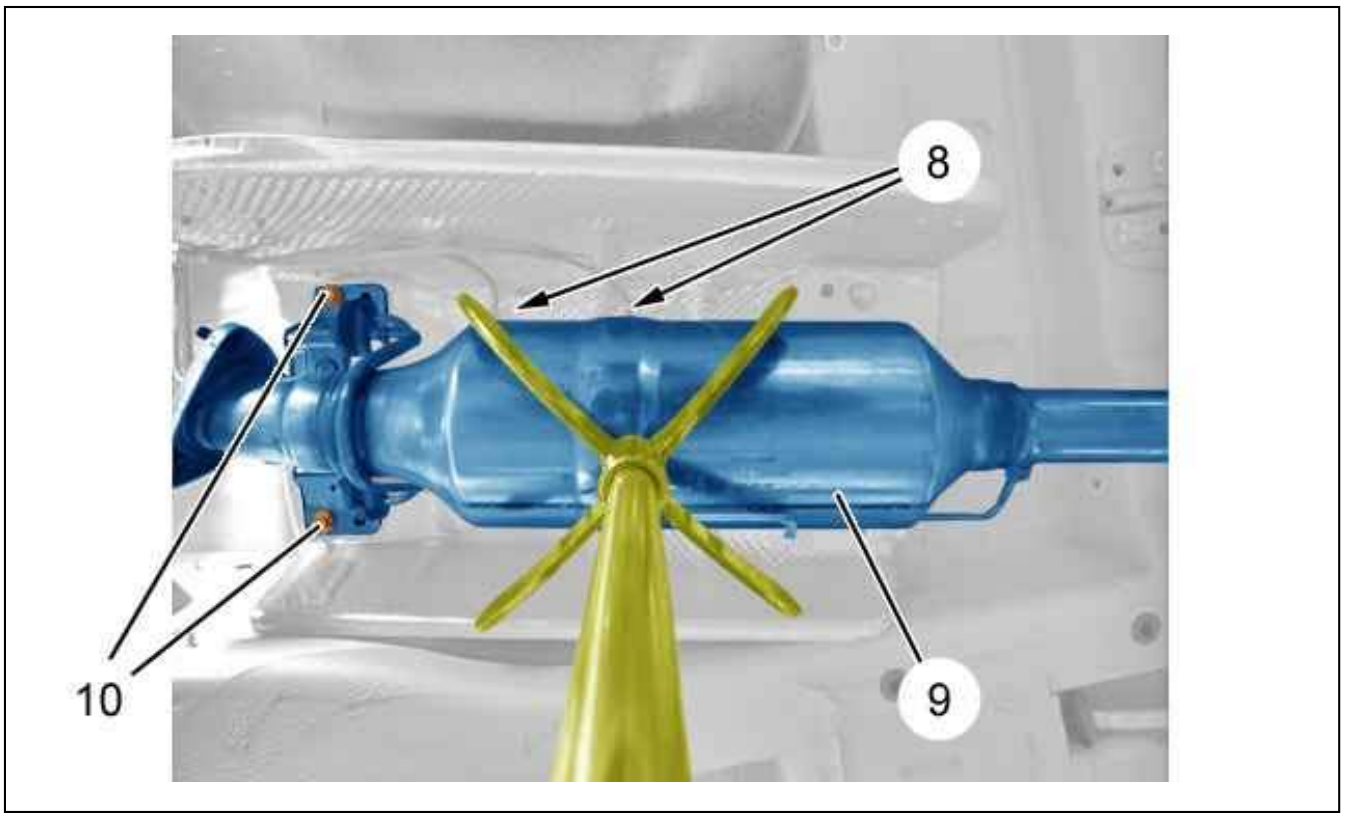

Figure : B1JG0MKD

CAUTION : Note the direction and pairing of the temperature sensors (8).

Uncouple : The temperature sensors (8).
Support the particle emission filter (9) ; Using a component lift.
Remove the nuts (10) from the exhaust flexible mountings.
Slowly lower the component lift.
Remove the particulate emission filter (9).
Close using tool [0188-T] :

- The pressure take-off pipes (4) (Metal pipes)
- The temperature sensors (8)

4.2. Refitting

CAUTION : Adhere to the tightening torques .

Refit ; Using the component lift :

- The particle emission filter (9)
- The nuts ((10)) of the exhaust hangers

Remove the tools [0188-T] from the following pipes :

- The pressure take-off pipes (4) (Metal pipes)
- The temperature sensors (8)

CAUTION : Couple up the temperature sensors (8) in accordance with the direction and pairing noted on removal.

Couple up : The temperature sensors (8).

CAUTION : Always replace the seals of the intermediate exhaust pipe (6).

Refit :

- The intermediate exhaust pipe (6)
- The bolts (5) (Intermediate exhaust pipe (6))
- The nut (7)

CAUTION : Couple up the pressure take-off pipes (4) (metal pipes) in accordance with the direction and pairing noted on removal.

Couple up : The pressure take-off pipes (4) (Metal pipes).
Refit the clip (1).

CAUTION : Perform the operations to be carried out following reconnection of the battery.

Reconnect the battery.

5. Replacement : Intermediate exhaust pipe

5.1. Removing

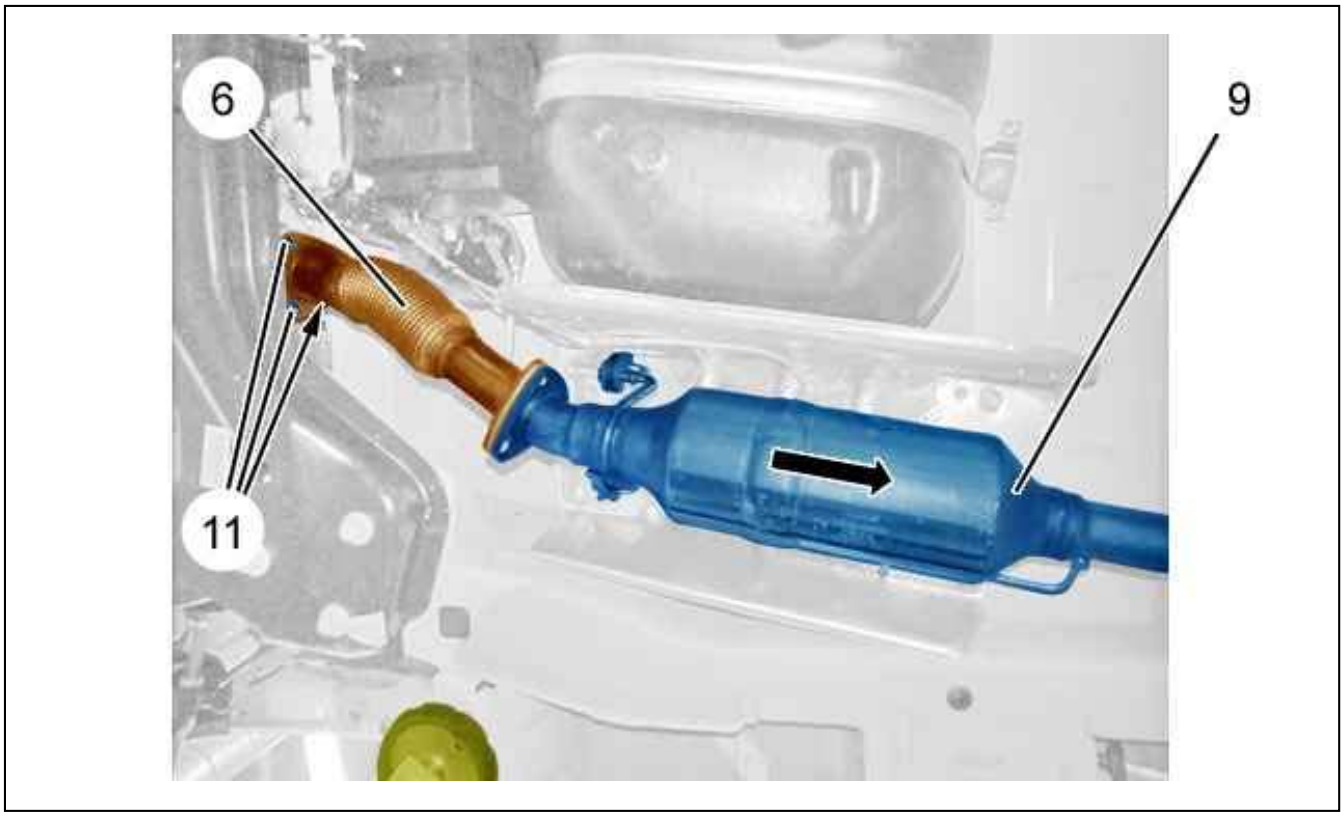

Figure : B1JG0MLD

Remove the bolts (5) (Intermediate exhaust pipe (6)).
Move the particle emission filter (9) and exhaust silencer (3) assembly back slightly to gain access to the intermediate exhaust pipe (6) (In the direction of the arrow).
Remove :

- The nuts (11)
- The intermediate exhaust pipe (6)

5.2. Refitting

CAUTION : Adhere to the tightening torques .

CAUTION : Always replace the seals of the exhaust hose (12).

Refit :

- The intermediate exhaust pipe (6)
- The nuts (11)
- The bolts (5) (Intermediate exhaust pipe (6))

REMOVING - REFITTING : PRE-CATALYSER

ESSENTIAL : Observe the safety and cleanliness recommendations .

1. Removing

ESSENTIAL : Respect the safety and cleanliness recommendations that are specific to high pressure diesel injection (HDi) engines .

Place the vehicle on a 2-post lift.
Disconnect the battery.
Remove :

- The oxygen sensor (From above the vehicle)
- The exhaust front flexible pipe (From below the vehicle)

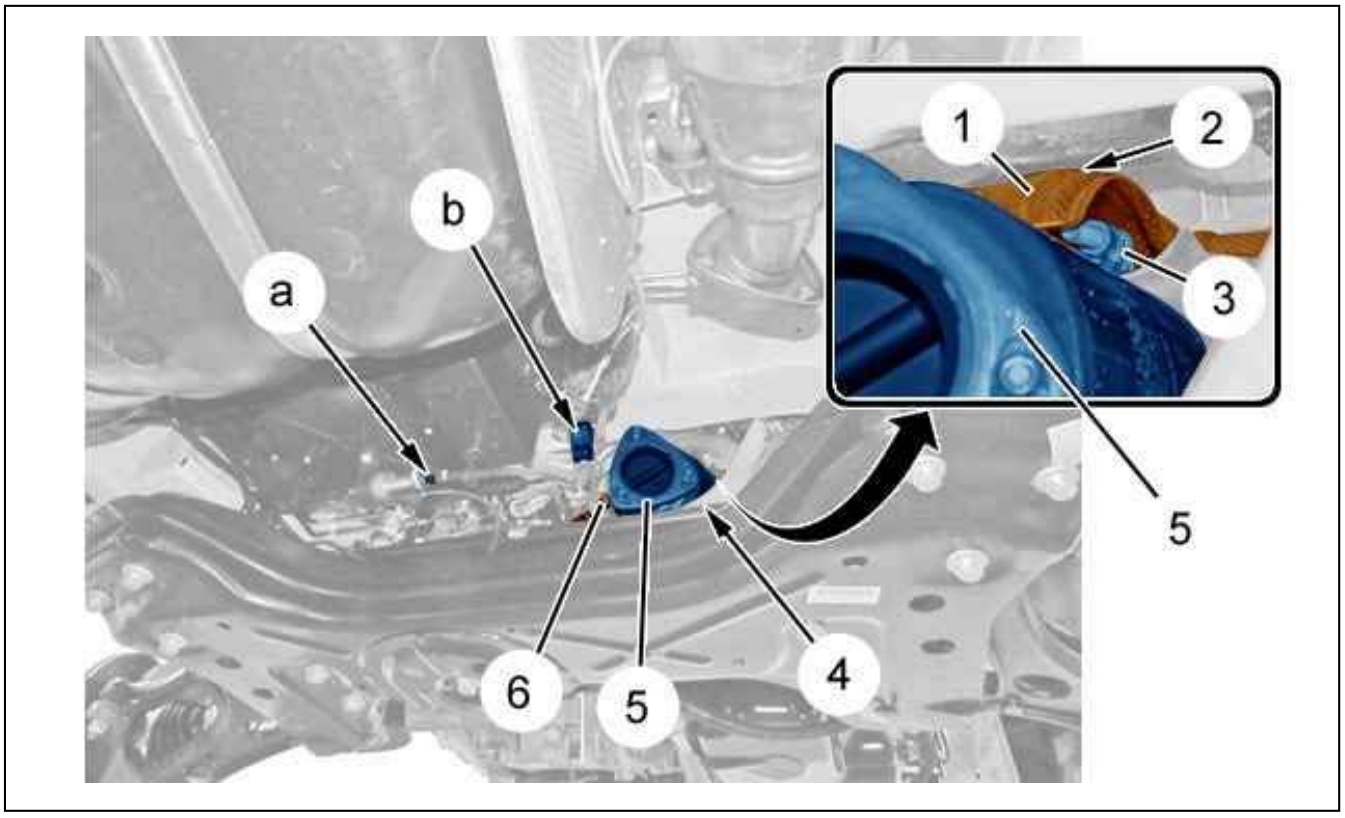

Figure : B1JG0OGD

Remove : The heat shield lower bolt (2).
Slightly move aside : The heat shield (1).
Remove :

- The exhaust clip (3)
- The pre-catalyst (5) retaining bolt (4)

Unplug : The vaporiser (6) (at "b").
Uncouple : The fuel pipe (at "a").
Remove the pre-catalytic converter (5).

2. Refitting

CAUTION : Adhere to the tightening torques .

CAUTION : Replace the pre-catalyser gaskets (5).

Refit :

- The pre-catalyst seals (new)
- The pre-catalytic converter (5)
- The pre-catalyst (5) retaining bolt (4)
- The exhaust clip (3)

Refit : The heat shield (1).
Refit : The heat shield lower bolt (2).
Couple up : The fuel pipe (at "a").
Reconnect : The vaporiser (6) (at "b").
Refit :

- The exhaust front flexible pipe
- The oxygen sensor

CAUTION : Perform the operations to be carried out following reconnection of the battery.

Reconnect the battery.

REMOVING - REFITTING : FUEL INJECTION VAPORISER AT THE EXHAUST

ESSENTIAL : Observe the safety and cleanliness recommendations .

1. Tooling

Equipment : Diagnostic tool.

Tool	Reference	Designation
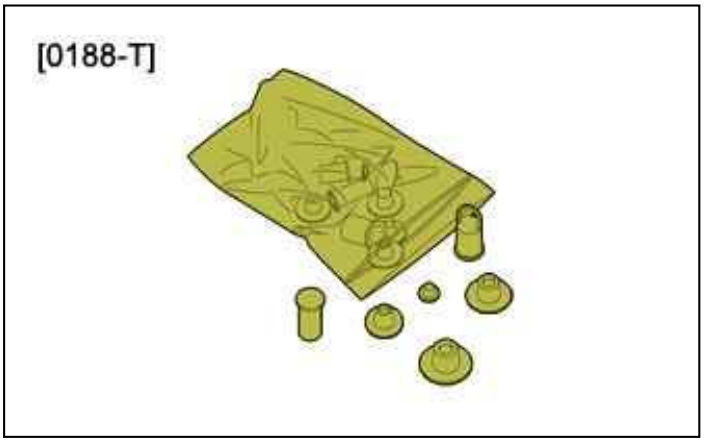 Figure : E5AB06IT	[0188-T]	plugs kit

2. Location

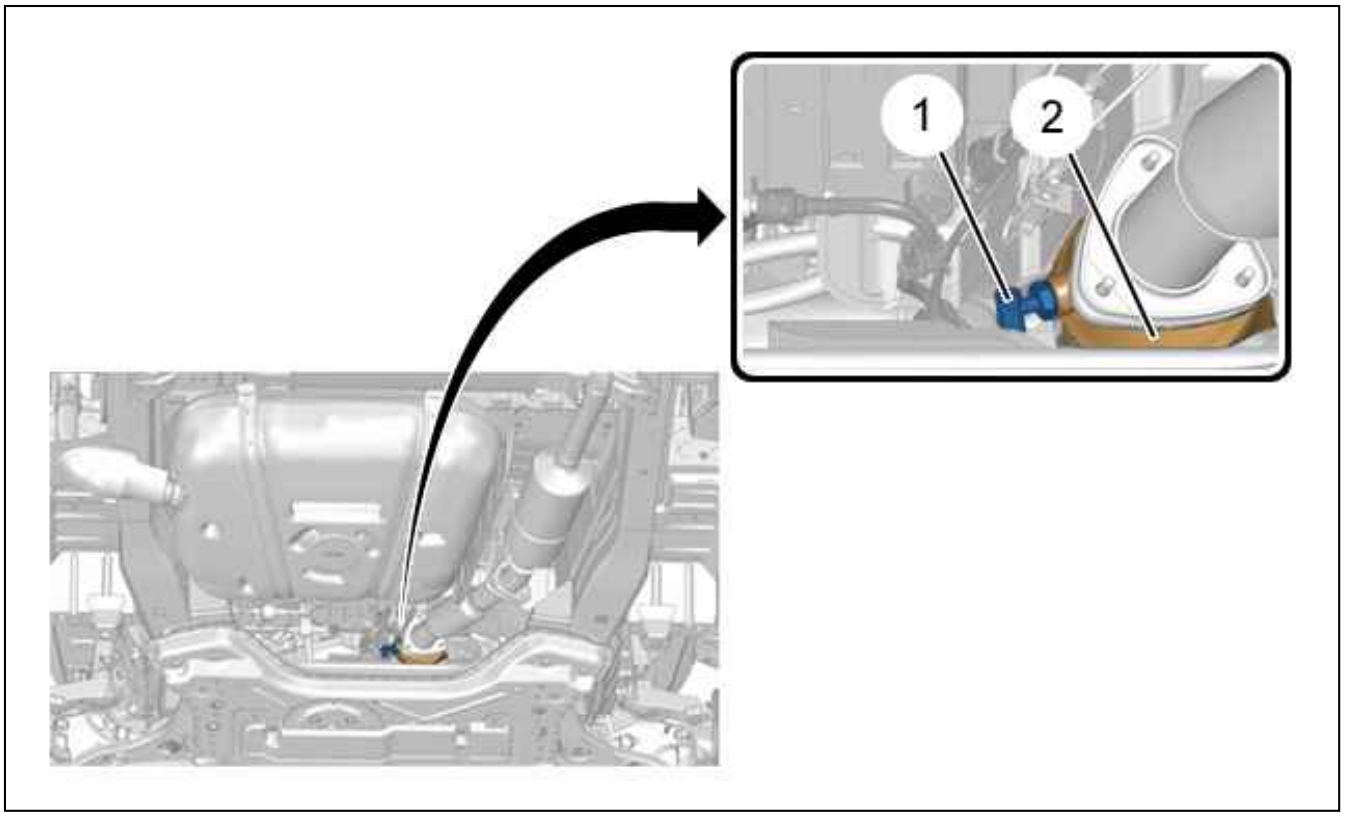

Figure : B1JG0NID

The vaporiser (1) is to be found on the precatalyst (2).

3. Removing

Place the vehicle on a 2-post lift.
Disconnect the battery.

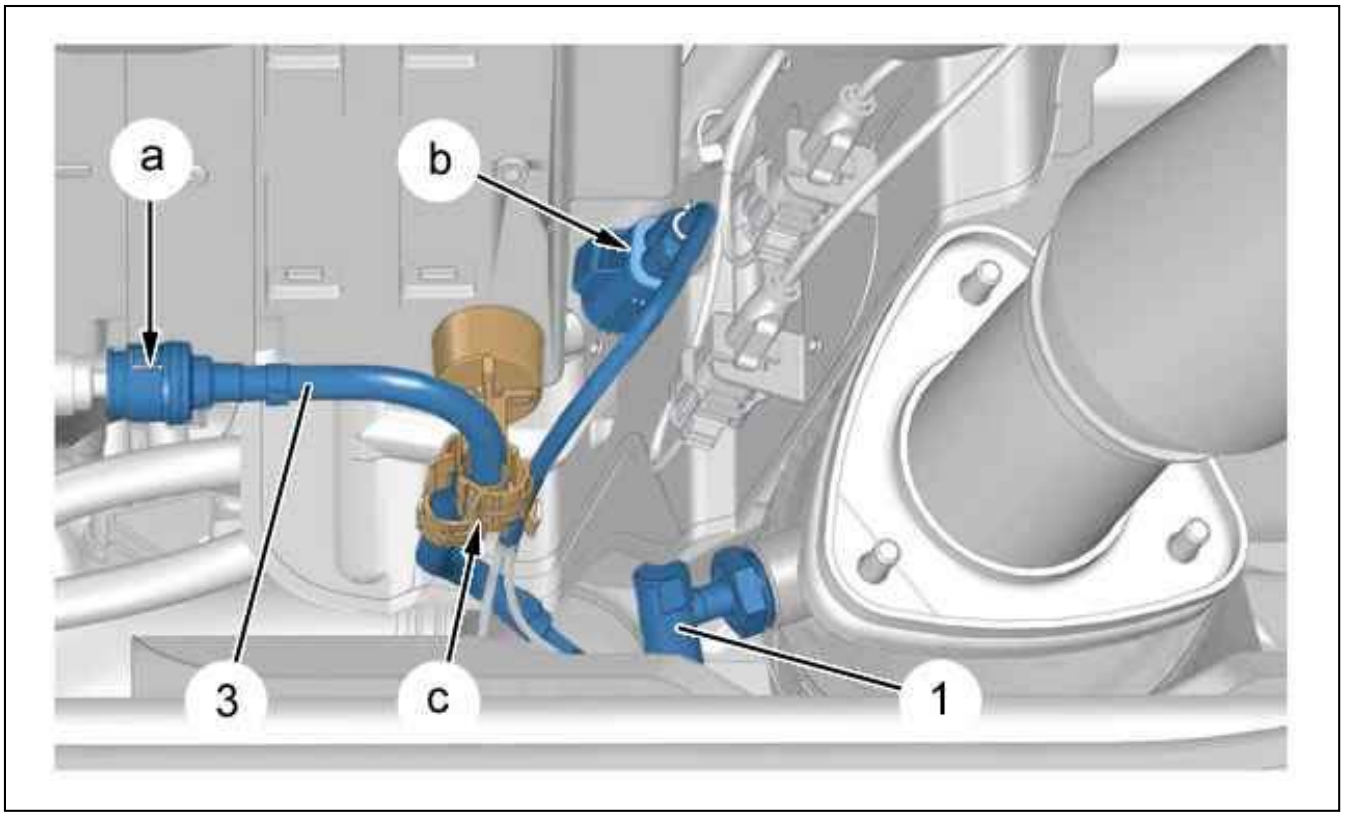

Figure : B1JG0NJD

CAUTION : Blank all the apertures of the fuel high pressure circuit ; Using tool [0188-T].

Disconnect the connector (at "b").
Unclip the pipe (3) (at "c").
Uncouple the pipe (3) (at "a").
Remove : The vaporiser (1).

4. Refitting

CAUTION : Adhere to the tightening torques .

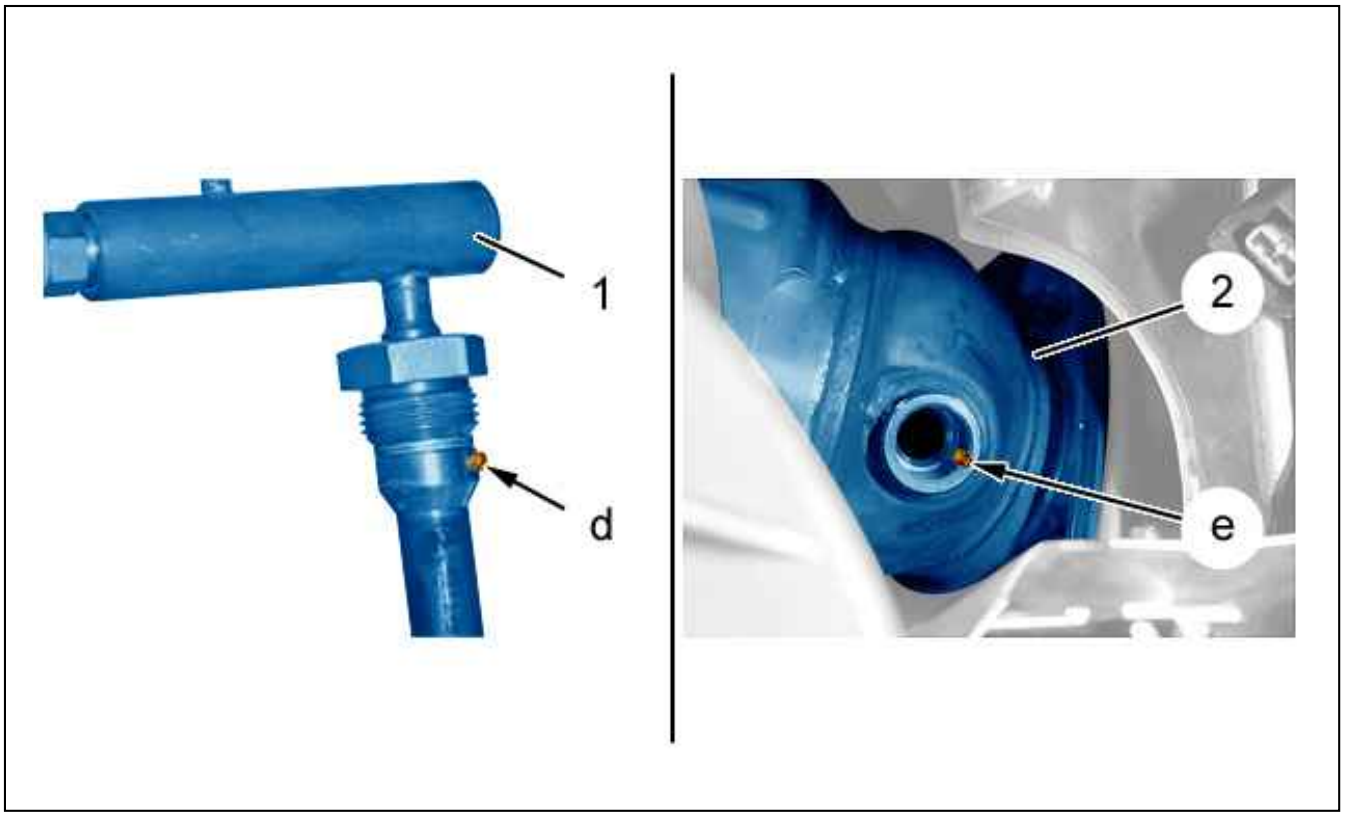

Figure : B1JG0NKD

Position the boss ("d") on the vaporiser (1) in the spline of the precatalyst (2) (at "e").
Refit : The vaporiser (1).
Clip the pipe (3) (at "c").
Connect the connector (at "b").
Couple the pipe (3) (at "a").

CAUTION : Perform the operations to be carried out following reconnection of the battery.

Reconnect the battery.
Clear the memory of faults ; Using the diagnostic equipment.

5. Repriming the vaporiser

CAUTION : After having performed a repair or a replacement either of the vaporiser, of the metering pump or of the pipe linking the metering pump to the vaporiser, it is necessary to perform the "metering pump replacement" procedure in the RP (replacement parts) menu ; Using the diagnostic tool.

Prime the vaporiser circuit ; Using the diagnostic tool.

REMOVING - REFITTING : OXYGEN SENSOR

ESSENTIAL : Observe the safety and cleanliness recommendations .

CAUTION : For any operation on an oxygen sensor : The oxygen sensor connector must be cleaned dry. It is strictly prohibited to use solvents or contact greases for cleaning the connectors of the upstream and downstream oxygen sensors.

1. Tooling

tool	Reference	Designation
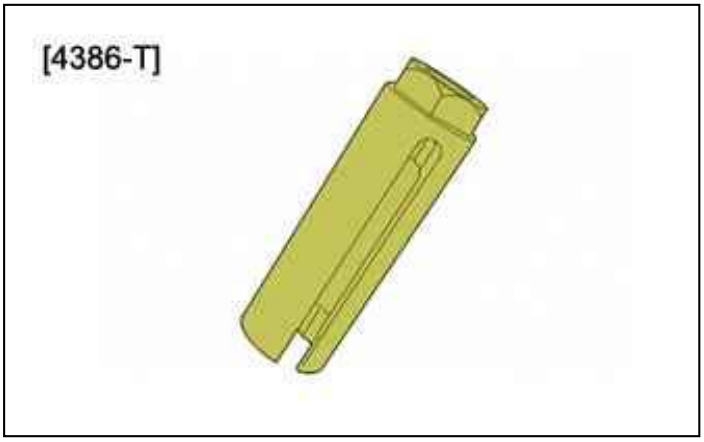 Figure : E5AB0DST	[4386-T]	slit socket 22 mm

2. Location

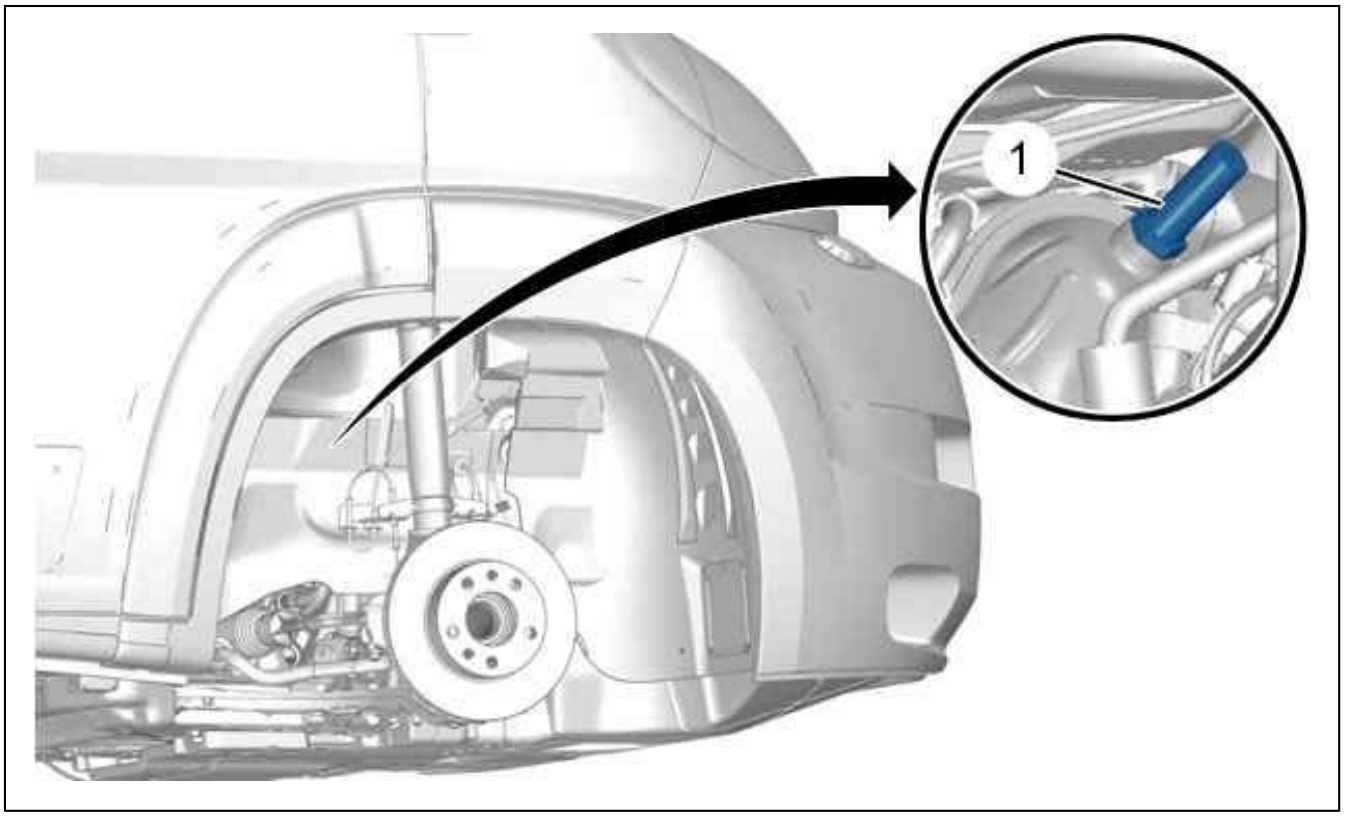

Figure : B1JG0LRD

(1) Oxygen sensor.

3. Removing

ESSENTIAL : Respect the safety and cleanliness requirements relating to the particle filter .

ESSENTIAL : Wait a minimum of one hour before any operation on the exhaust line and the turbocharger.

Place the vehicle on a 2-post lift.
Disconnect the negative terminal of the service battery.
Remove :

- The front right wheel
- The front right mud guard

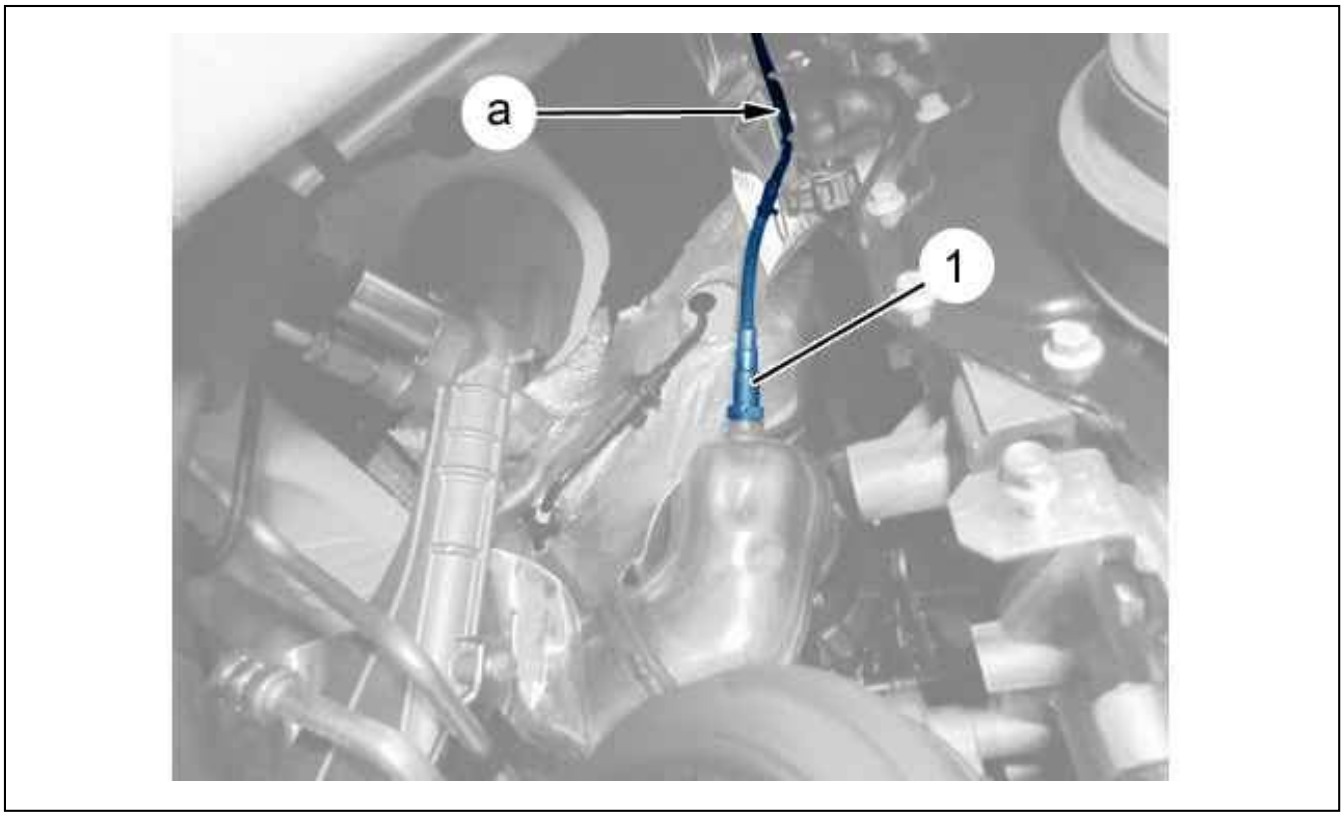

Figure : B1JG0LTD

Unplug : The connector of the oxygen sensor (1) (at "a").
Remove the oxygen sensor (1) ; Using tool [4386-T].

4. Refitting

CAUTION : Adhere to the tightening torques .

Refit the oxygen sensor (1) ; Using tool [4386-T].
Connect : The connector of the oxygen sensor (1) (at "a").
Refit :

- The front right mud guard
- The front right wheel

CAUTION : Perform the operations that are required following a reconnection of the ancillaries battery.

Reconnect the ancillaries battery.

5. Check

Start the engine.
Check :

- The absence of exhaust gas leaks
- The operation of the oxygen sensor (1) ; Using the diagnostic equipment

Stop the engine.

REMOVING - REFITTING : EXHAUST MANIFOLD

ESSENTIAL : Observe the safety and cleanliness recommendations .

1. Removing

ESSENTIAL : Respect the safety and cleanliness recommendations that are specific to high pressure diesel injection (HDi) engines .

CAUTION : Do not separate the pressure regulation valve from the turbocharger or slacken its fixings.

Place the vehicle on a 2-post lift.
Disconnect the battery negative terminal.
Remove the turbocharger .

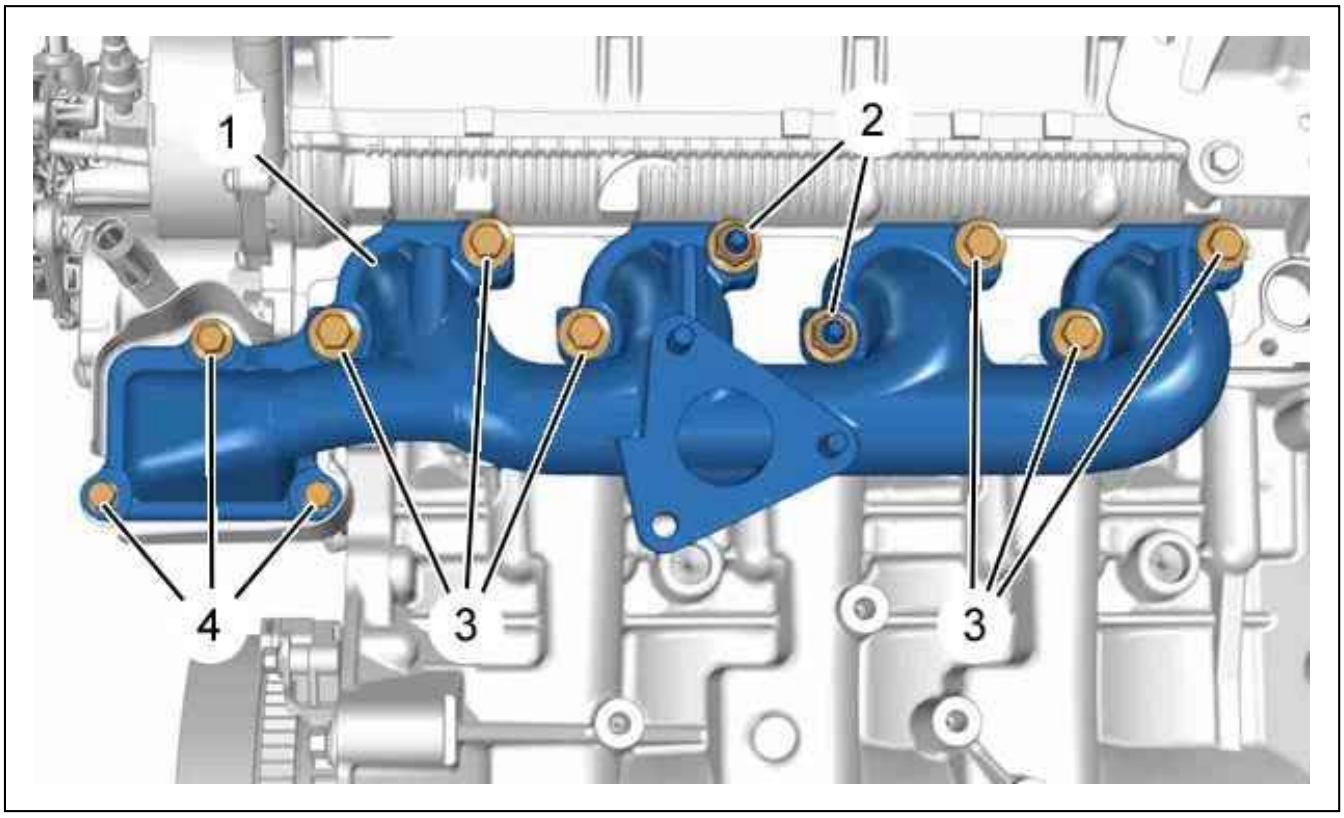

Figure : B1JG0LVD

Remove :

- The screws (4) of the EGR electrovalve cooler
- The bolts (3)
- The nuts (2)
- The exhaust manifold (1)

2. Refitting

CAUTION : If the turbocompressor fixing studs have been removed, refit them coated with LOCTITE FRENETANCH.

CAUTION : Adhere to the tightening torques .

CAUTION : Fit a centring pin on the exhaust manifold .

Refit the exhaust manifold (1).

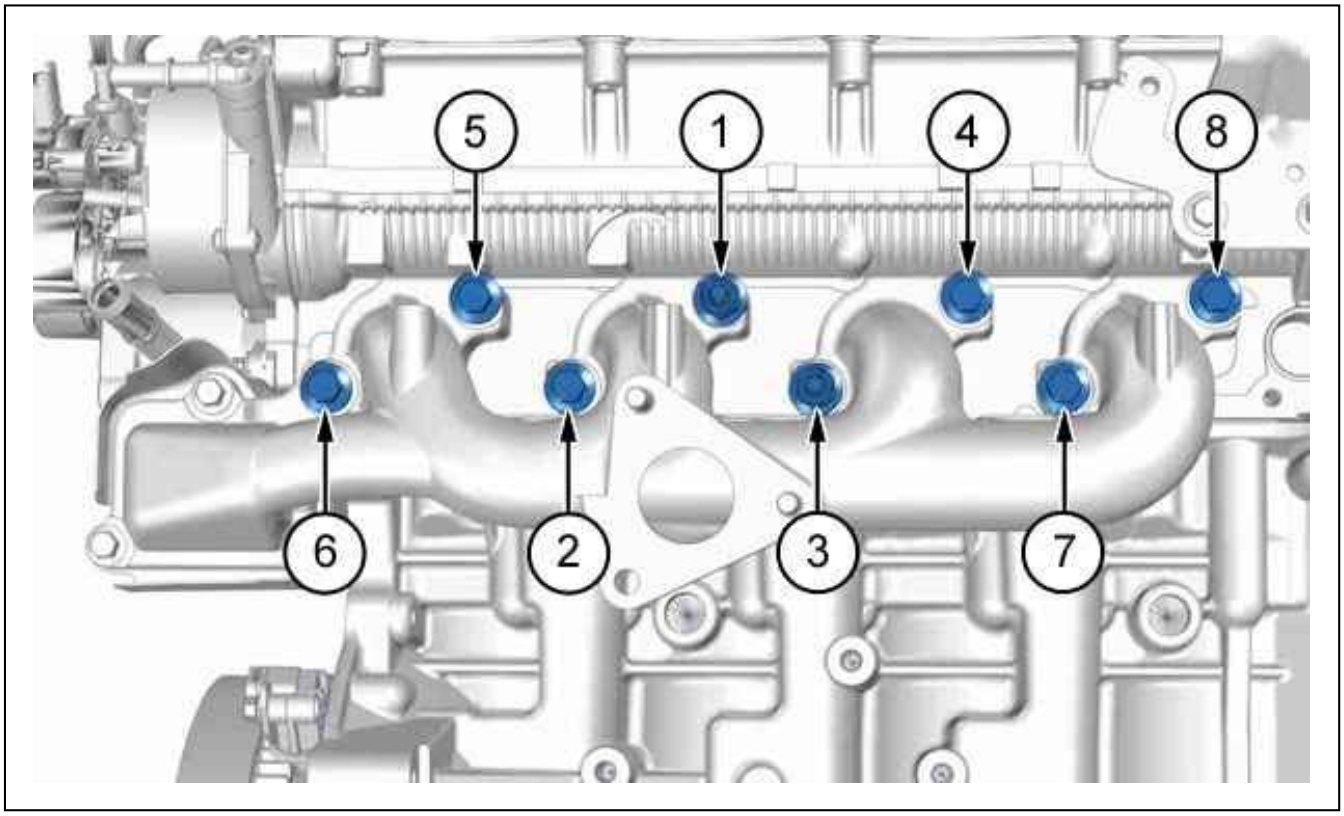

Figure : B1JG0LWD

CAUTION : Follow the tightening sequence.

Refit :

- The nuts (2)
- The bolts (3)
- The screws (4) of the EGR electrovalve cooler

Fit the turbocharger .

CAUTION : Check that there are no foreign bodies in the air ducts.

CAUTION : Perform the operations to be carried out following reconnection of the battery.

Reconnect the battery negative terminal.

REMOVING - REFITTING : EXHAUST GAS RECYCLING SOLENOID VALVE

ESSENTIAL : Observe the safety and cleanliness recommendations .

1. Tooling

A diagnostic tool.

2. Removing

ESSENTIAL : Respect the safety and cleanliness recommendations that are specific to high pressure diesel injection (HDi) engines .

Disconnect the battery negative terminal.

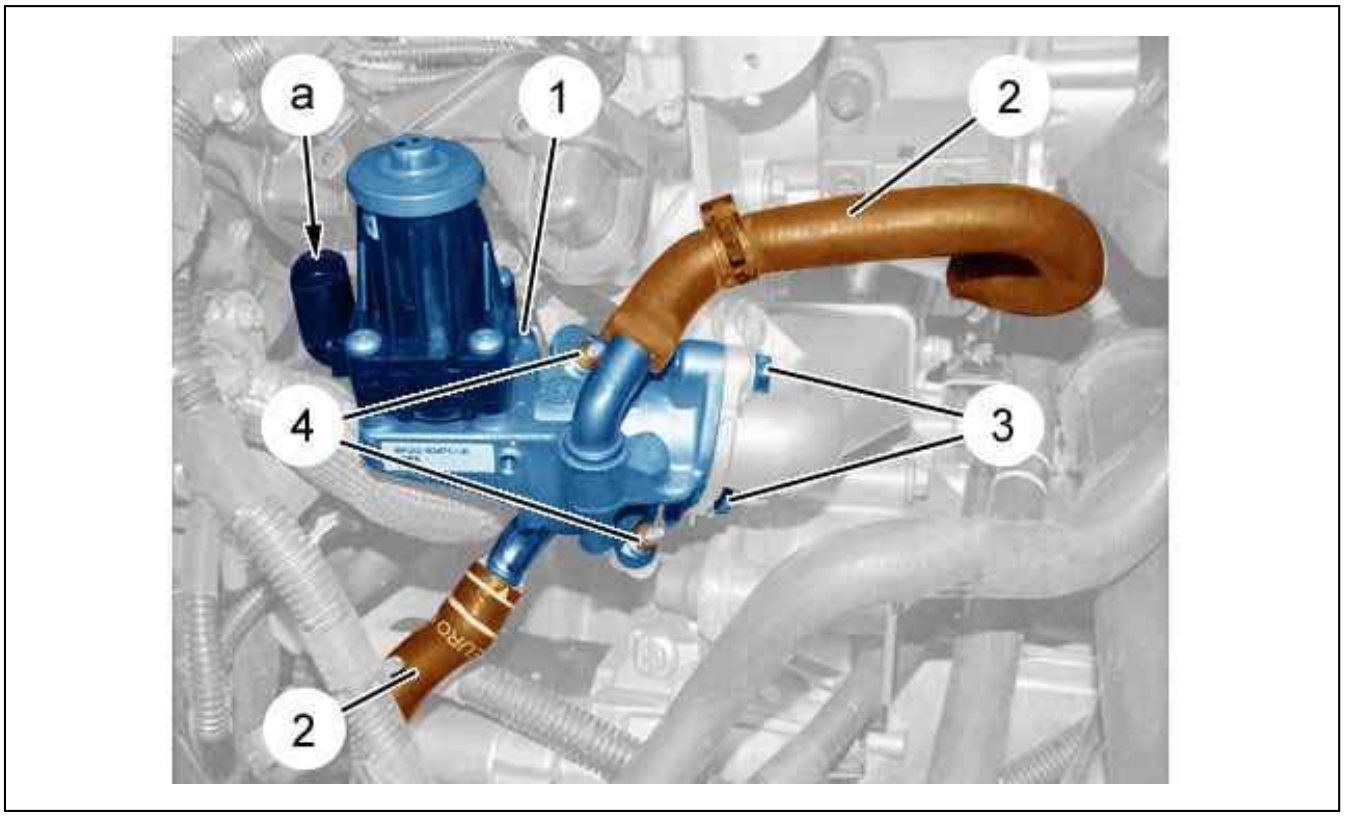

Figure : B1KG0FCD

Remove :

- The upper central bumper
- The front panel upper crossmember

Disconnect the connector (at "a").
Drain the cooling system.
Disconnect the pipes (2).
Remove :

- The bolts (4), (3)

- The EGR electrovalve (1)
- The seals of the EGR electrovalve (1)

3. Refitting

CAUTION : Replace the seals of the EGR electrovalve (1).

CAUTION : Adhere to the tightening torques .

Refit :

- The seals of the EGR electrovalve (1) (new)
- The EGR electrovalve (1)
- The bolts (4), (3)

Join the hoses (2).
Reconnect the connector (at "a").
Refit :

- The front panel upper crossmember
- The upper central bumper

Fill and bleed the cooling system.

CAUTION : Perform the operations to be carried out following reconnection of the battery.

Reconnect the battery negative terminal.

4. Learning

Programme the exhaust gas recirculation (EGR) valve ; Using the diagnostic tool.
Road test the vehicle.

REMOVAL - REFITTING : EXHAUST GAS PRESSURE SENSOR PRESSURE TAKE-OFF

ESSENTIAL : Observe the safety and cleanliness instructions .

1. Tooling

Tool	Reference	Description
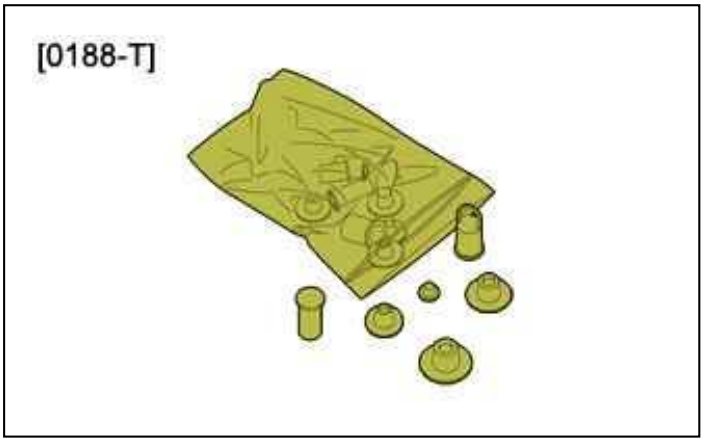 Figure : E5AB06IT	[0188-T]	Set of plugs HDI
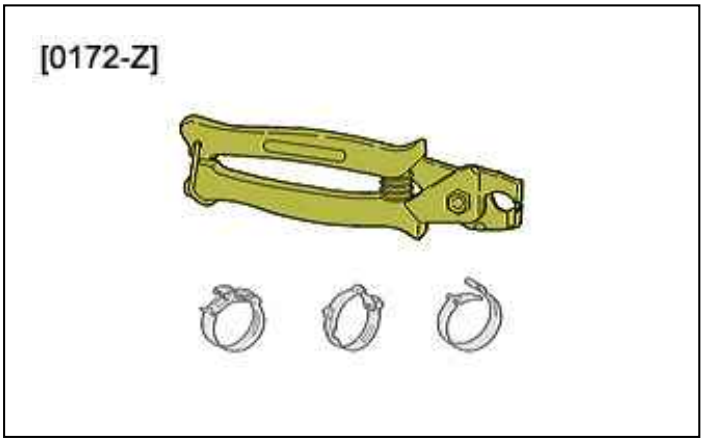 Figure : E5AB0OAT	[0172-Z]	pliers for removing "clic" clips

2. Removal

Lift and support the vehicle with the wheels free.
Disconnect the battery.

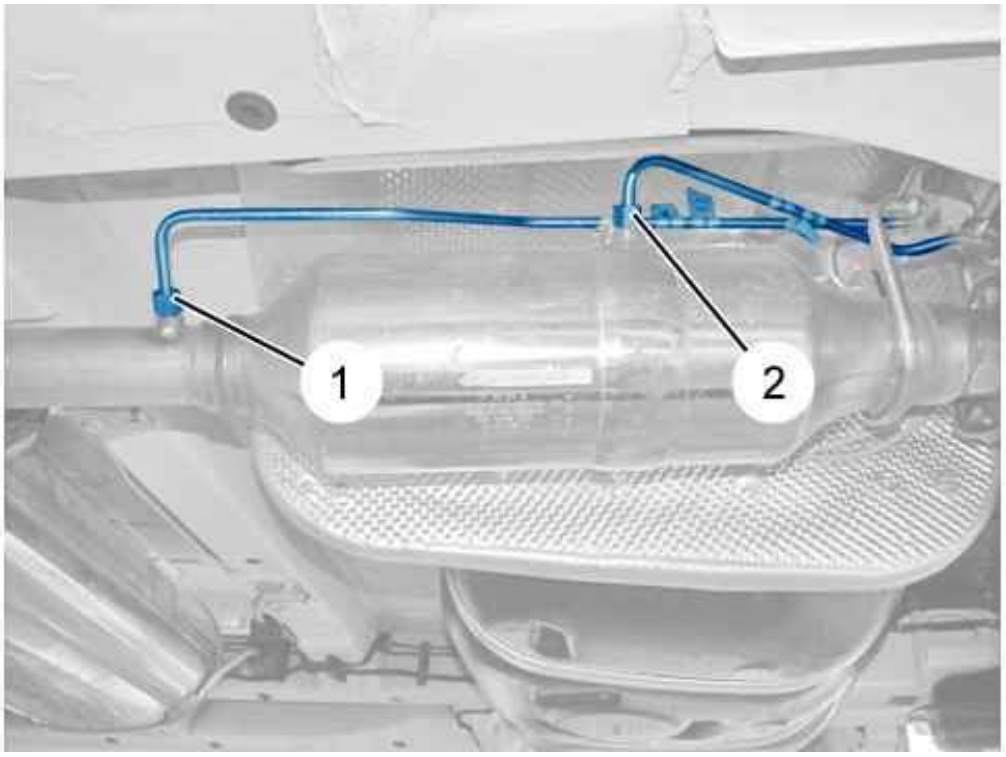

Figure : B1KG0FKD

Uncouple :

- The downstream pressure take-off pipe (1)
- The upstream pressure take-off pipe (2)

Block the downstream pressure take-off pipe (1) and the upstream pressure take-off pipe (2) ; Using the set of plugs [0188-T].

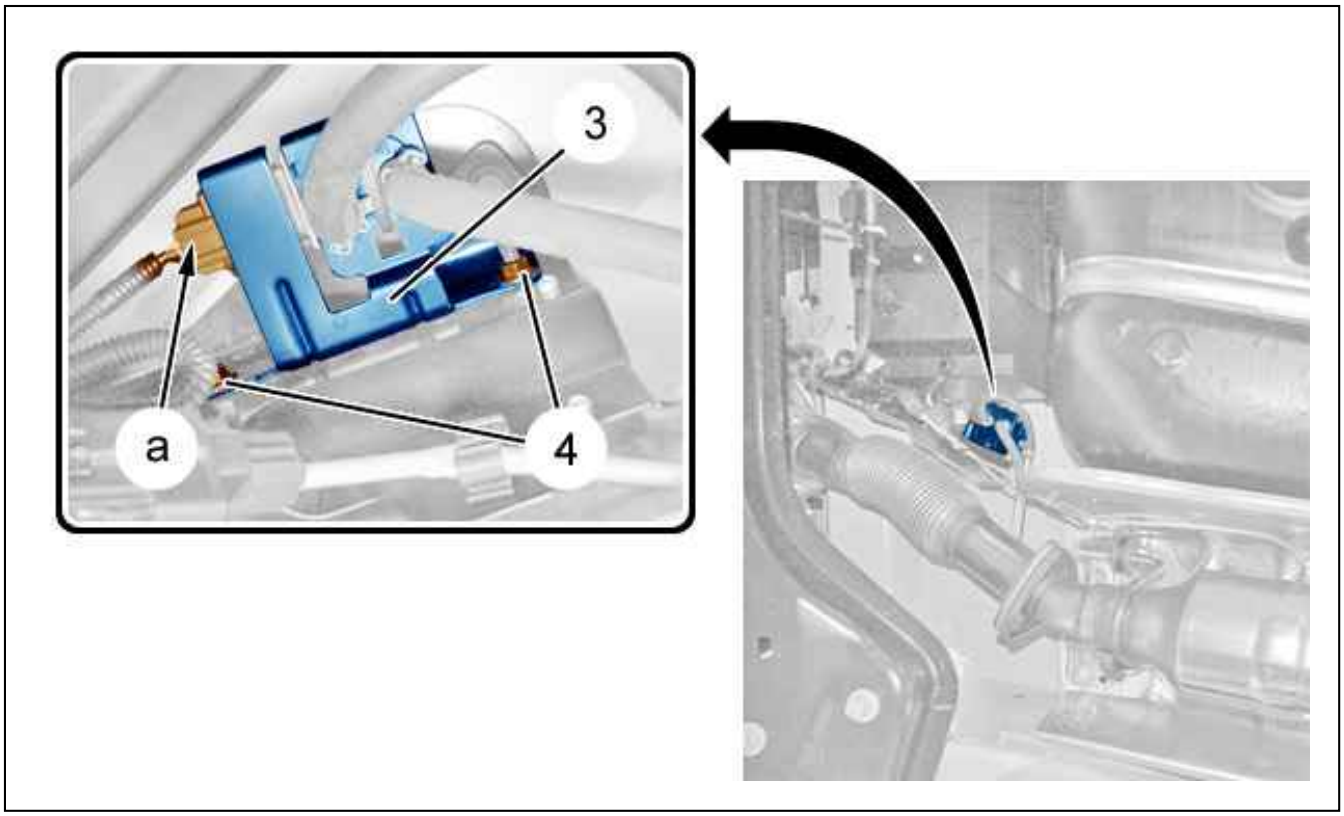

Figure : B1KG0FLD

Disconnect the connector (at "a").
Remove the nuts (4) of the exhaust gas pressure sensor support (3).

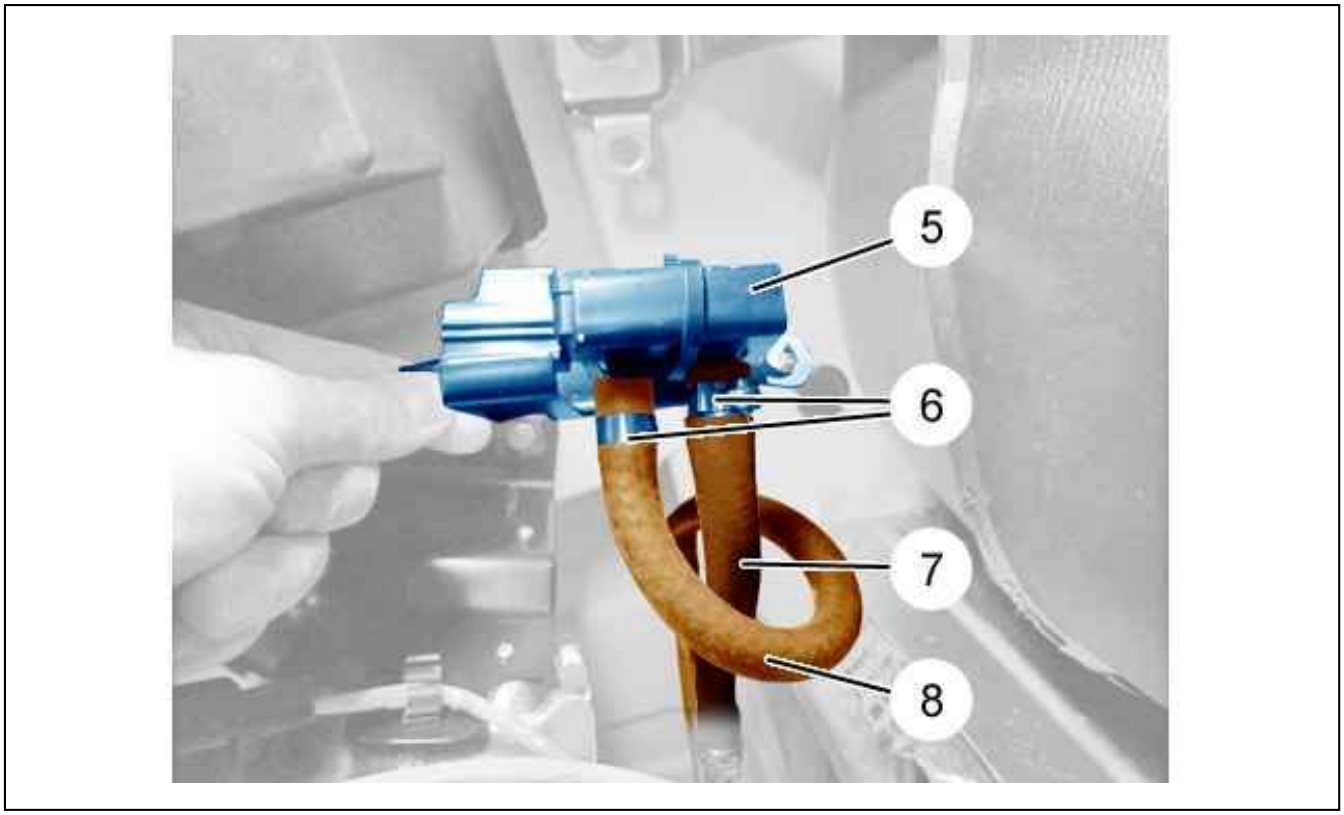

Figure : B1KG0FMD

CAUTION : Mark the orientation and the matching of the flexible pressure take-off pipes (7) and (8) on the exhaust gas pressure sensor (5) before uncoupling them.

Take down :

- The clips (6) ; Using the tool [0172-Z]
- The downstream pressure take-off pipe (7) from the exhaust gas pressure sensor (5)
- The upstream pressure take-off pipe (8) from the exhaust gas pressure sensor (5)

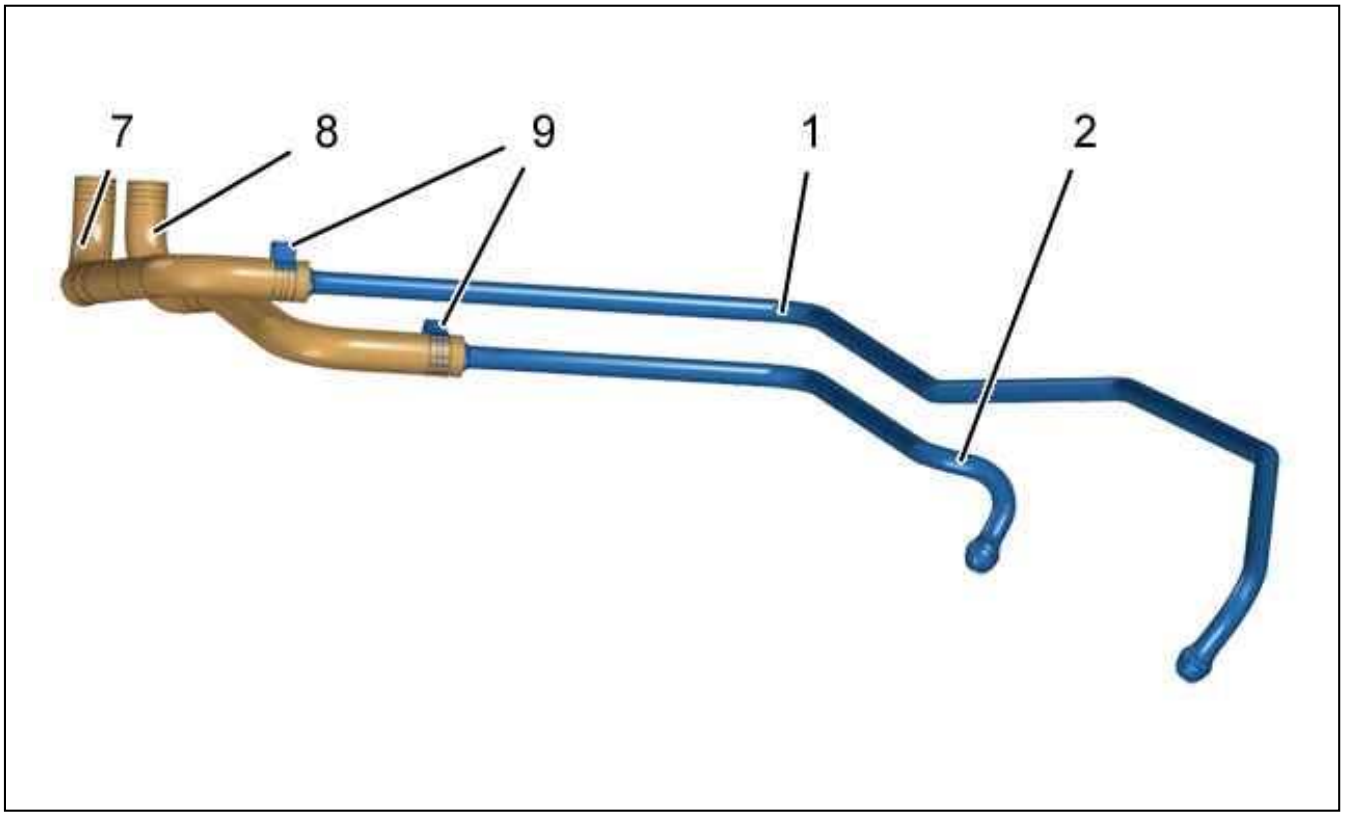

Figure : B1KG0FND

CAUTION : Mark the orientation and the matching of the flexible pressure take-off pipes (7), (8) on the upstream pressure take-off pipe (2) and the downstream pressure take-off pipe (1), before uncoupling them.

Remove the clips (9) ; Using the tool [0172-Z].
Uncouple the flexible pressure take-off pipes (7) and (8) from the downstream pressure take-off pipe (1) and the upstream pressure take-off pipe (2).
Close ; Using the set of plugs [0188-T] :

- The downstream pressure take-off pipe (1)
- The upstream pressure take-off pipe (2)
- The flexible pressure take-off pipes (7), (8)

3. Refitting

CAUTION : Adhere to the tightening torques .

CAUTION : Replace the "clic" clips that you have removed with new "clic" clips.

Remove the closers [0188-T].

CAUTION : Couple the flexible pressure take-off pipes (7, 8) on the upstream pressure take-off pipe (2) and on the downstream pressure take-off pipe (1), with respect to the orientation and the matching marked at removal.

Fit :

- The clips (9) (new) ; Using the tool [0172-Z]
- The pressure take-off pipes (1), (2)

Tighten the unions of the downstream pressure take-off pipe (1) and the upstream pressure take-off pipe (2).
Couple the downstream pressure take-off pipe (1) and the upstream pressure take-off pipe (2) on the exhaust gas pressure sensor (5) (in the positions marked when you removed them).
Fit :

- The clips (6) (new) ; Using the tool [0172-Z]
- The exhaust gas pressure sensor support (3)
- The nuts (4)

Reconnect the connector (at "a").

CAUTION : Perform the operations that are necessary after a battery reconnection.

Reconnect the battery.

4. Checks

Start the engine.
Check for exhaust gas leaks.
Check the functioning of the differential pressure sensor (5) and of the exhaust gas temperature sensors.

REMOVAL - REFITTING : EXHAUST GAS PRESSURE SENSOR PRESSURE TAKE-OFF

ESSENTIAL : Observe the safety and cleanliness instructions .

1. Tooling

Tool	Reference	Description
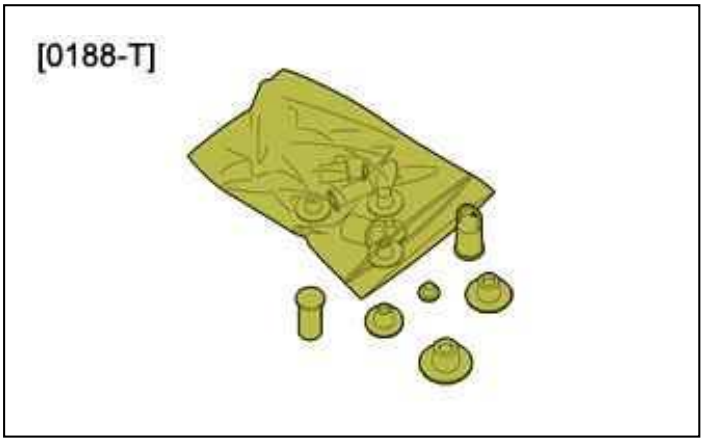 Figure : E5AB06IT	[0188-T]	Set of plugs HDI
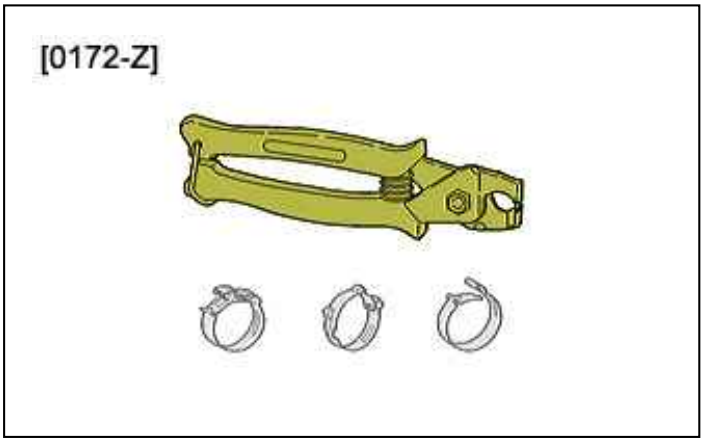 Figure : E5AB0OAT	[0172-Z]	pliers for removing "clic" clips

2. Removal

Lift and support the vehicle with the wheels free.
Disconnect the battery.

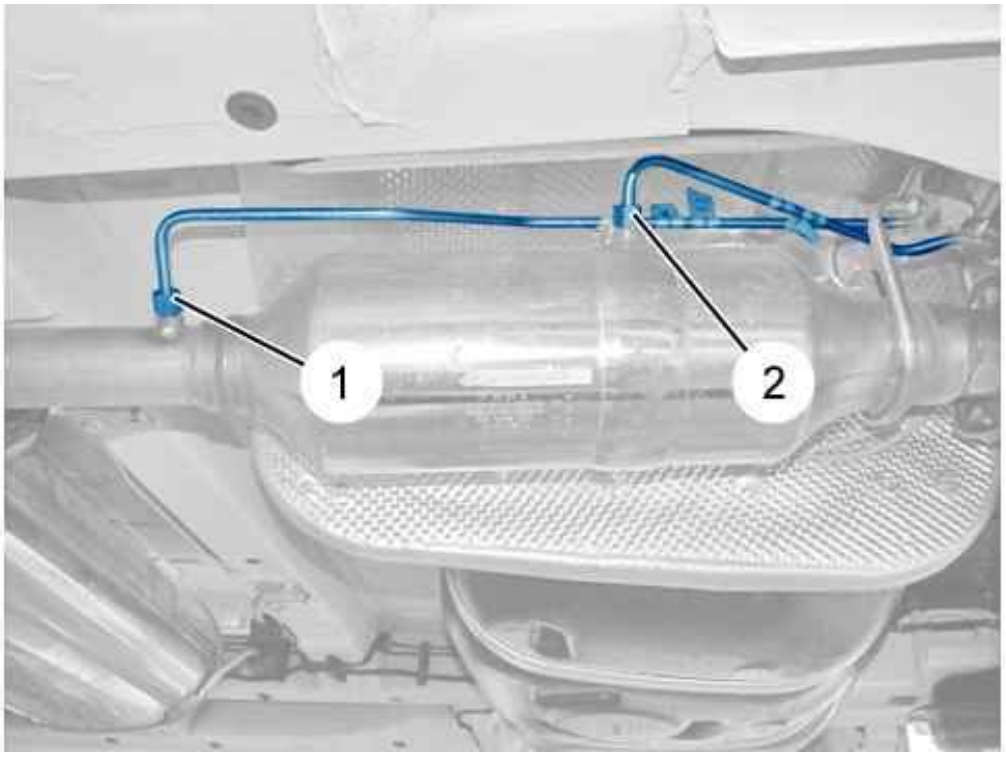

Figure : B1KG0FKD

Uncouple :

- The downstream pressure take-off pipe (1)
- The upstream pressure take-off pipe (2)

Block the downstream pressure take-off pipe (1) and the upstream pressure take-off pipe (2) ; Using the set of plugs [0188-T].

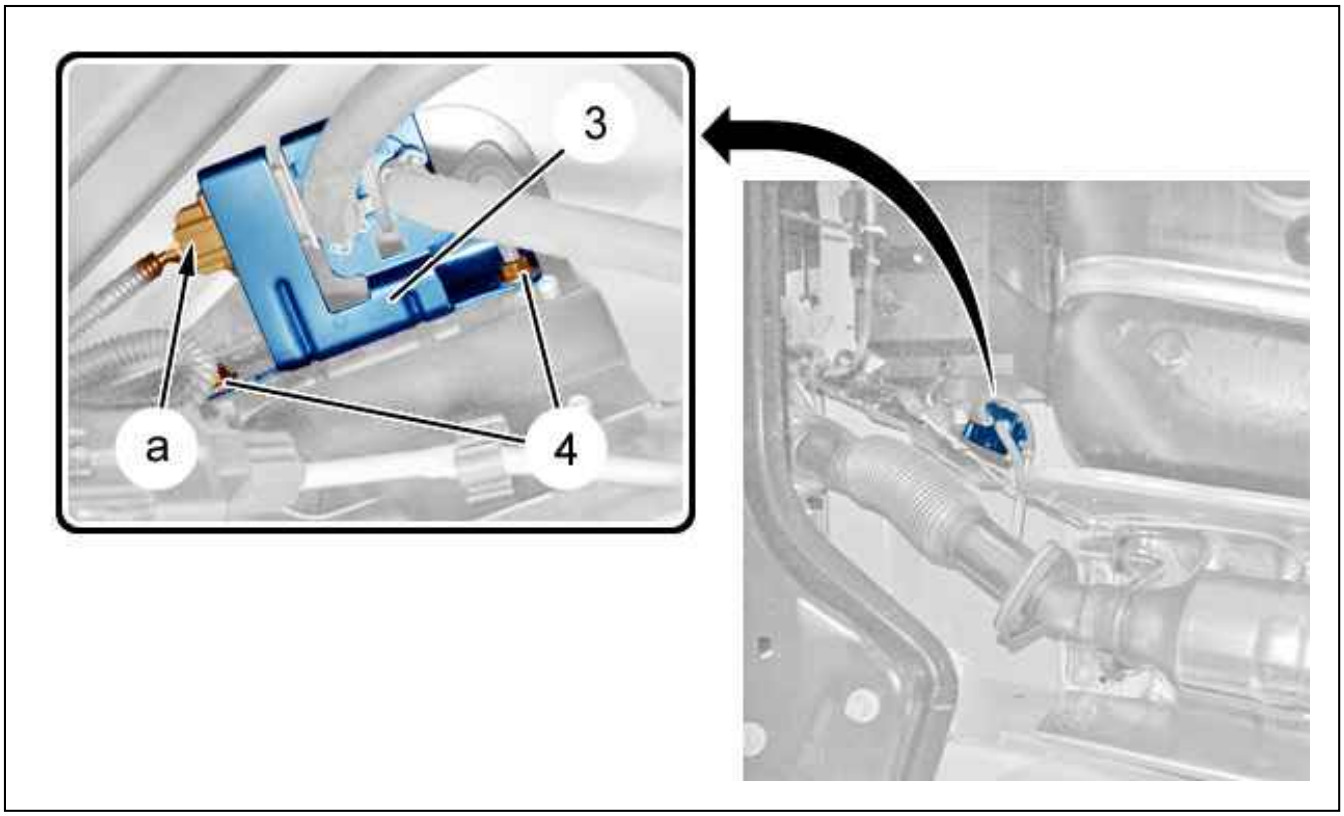

Figure : B1KG0FLD

Disconnect the connector (at "a").
Remove the nuts (4) of the exhaust gas pressure sensor support (3).

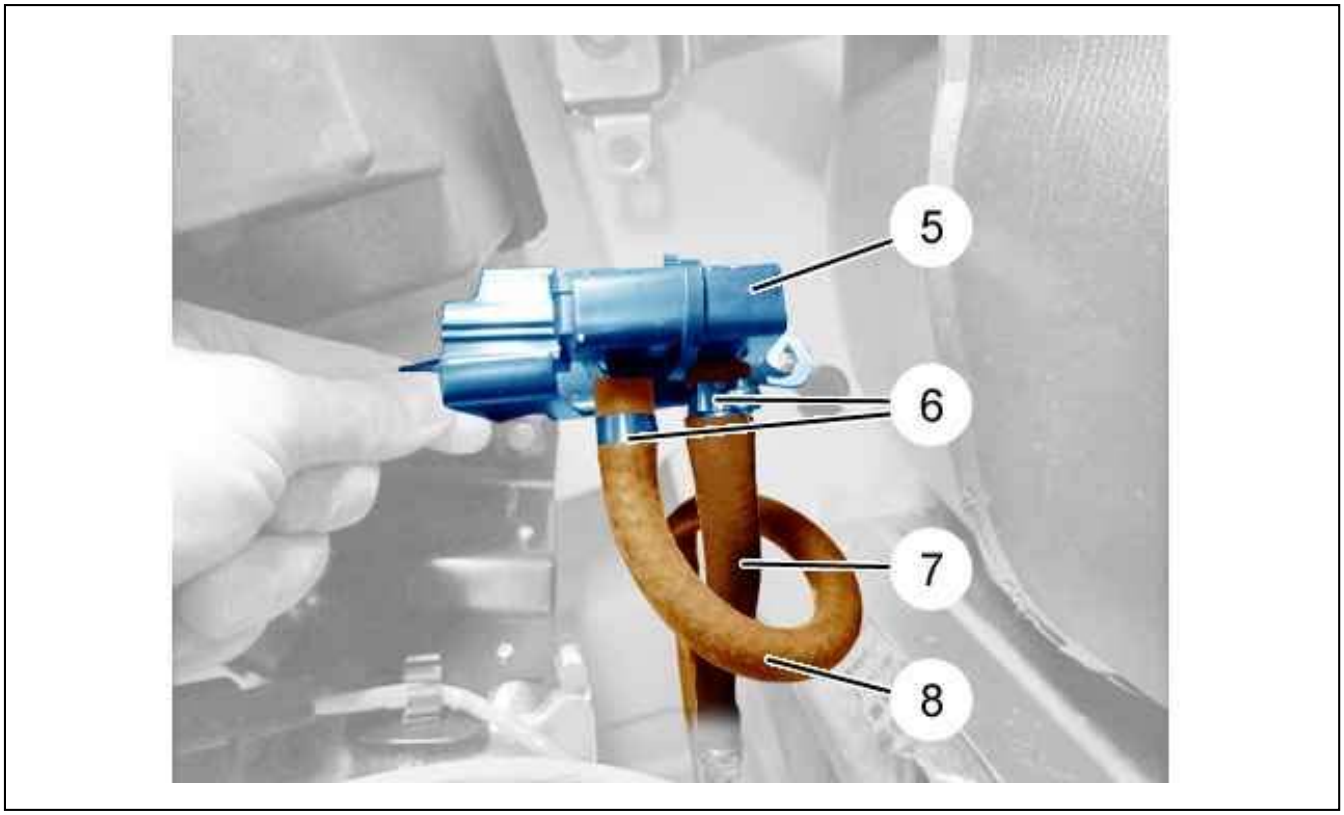

Figure : B1KG0FMD

CAUTION : Mark the orientation and the matching of the flexible pressure take-off pipes (7) and (8) on the exhaust gas pressure sensor (5) before uncoupling them.

Take down :

- The clips (6) ; Using the tool [0172-Z]
- The downstream pressure take-off pipe (7) from the exhaust gas pressure sensor (5)
- The upstream pressure take-off pipe (8) from the exhaust gas pressure sensor (5)

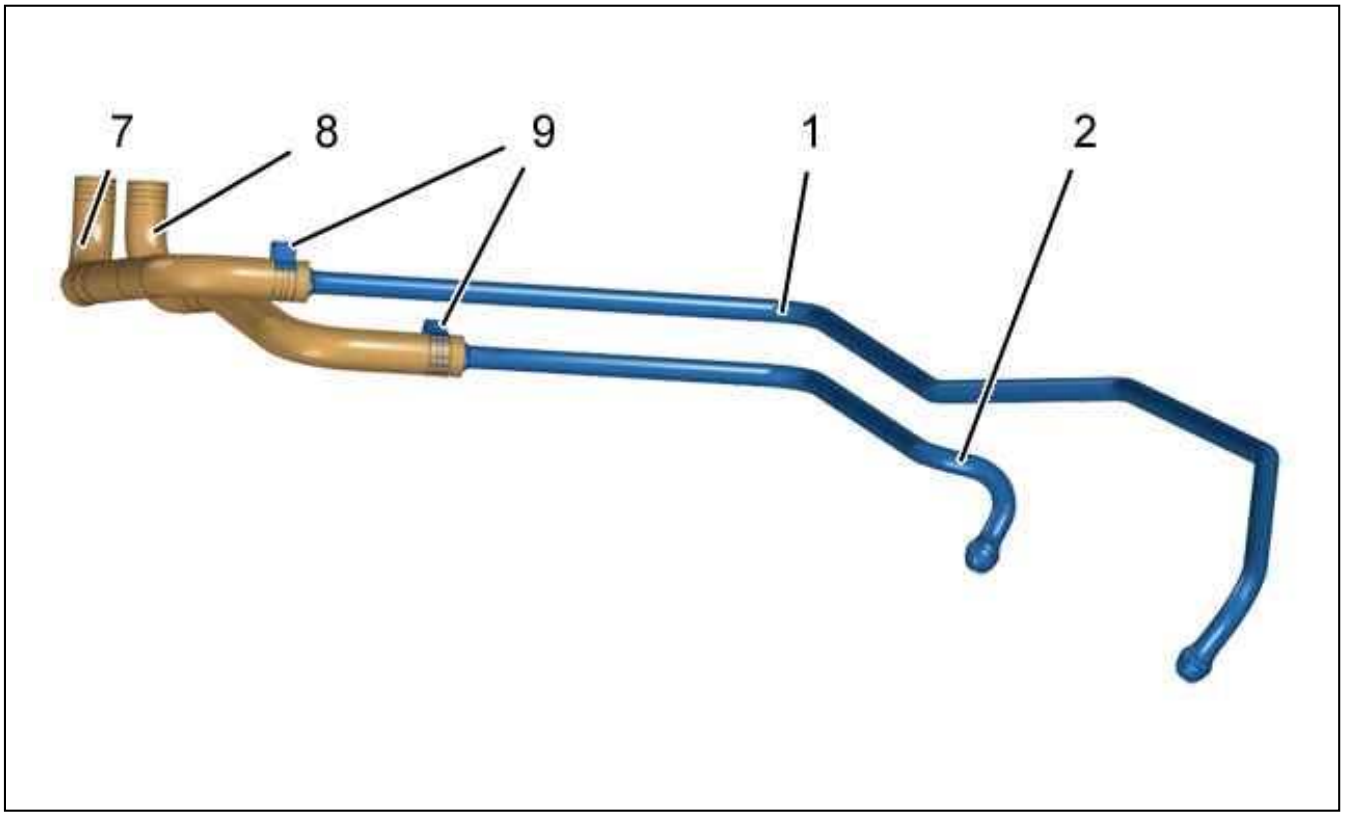

Figure : B1KG0FND

CAUTION : Mark the orientation and the matching of the flexible pressure take-off pipes (7), (8) on the upstream pressure take-off pipe (2) and the downstream pressure take-off pipe (1), before uncoupling them.

Remove the clips (9) ; Using the tool [0172-Z].
Uncouple the flexible pressure take-off pipes (7) and (8) from the downstream pressure take-off pipe (1) and the upstream pressure take-off pipe (2).
Close ; Using the set of plugs [0188-T] :

- The downstream pressure take-off pipe (1)
- The upstream pressure take-off pipe (2)
- The flexible pressure take-off pipes (7), (8)

3. Refitting

CAUTION : Adhere to the tightening torques .

CAUTION : Replace the "clic" clips that you have removed with new "clic" clips.

Remove the closers [0188-T].

CAUTION : Couple the flexible pressure take-off pipes (7, 8) on the upstream pressure take-off pipe (2) and on the downstream pressure take-off pipe (1), with respect to the orientation and the matching marked at removal.

Fit :

- The clips (9) (new) ; Using the tool [0172-Z]
- The pressure take-off pipes (1), (2)

Tighten the unions of the downstream pressure take-off pipe (1) and the upstream pressure take-off pipe (2).
Couple the downstream pressure take-off pipe (1) and the upstream pressure take-off pipe (2) on the exhaust gas pressure sensor (5) (in the positions marked when you removed them).
Fit :

- The clips (6) (new) ; Using the tool [0172-Z]
- The exhaust gas pressure sensor support (3)
- The nuts (4)

Reconnect the connector (at "a").

CAUTION : Perform the operations that are necessary after a battery reconnection.

Reconnect the battery.

4. Checks

Start the engine.
Check for exhaust gas leaks.
Check the functioning of the differential pressure sensor (5) and of the exhaust gas temperature sensors.

REMOVING - REFITTING : EXHAUST GAS TEMPERATURE SENSORS

ESSENTIAL : Observe the safety and cleanliness recommendations .

1. Removing

Put the vehicle on a hoist.
Disconnect the battery.

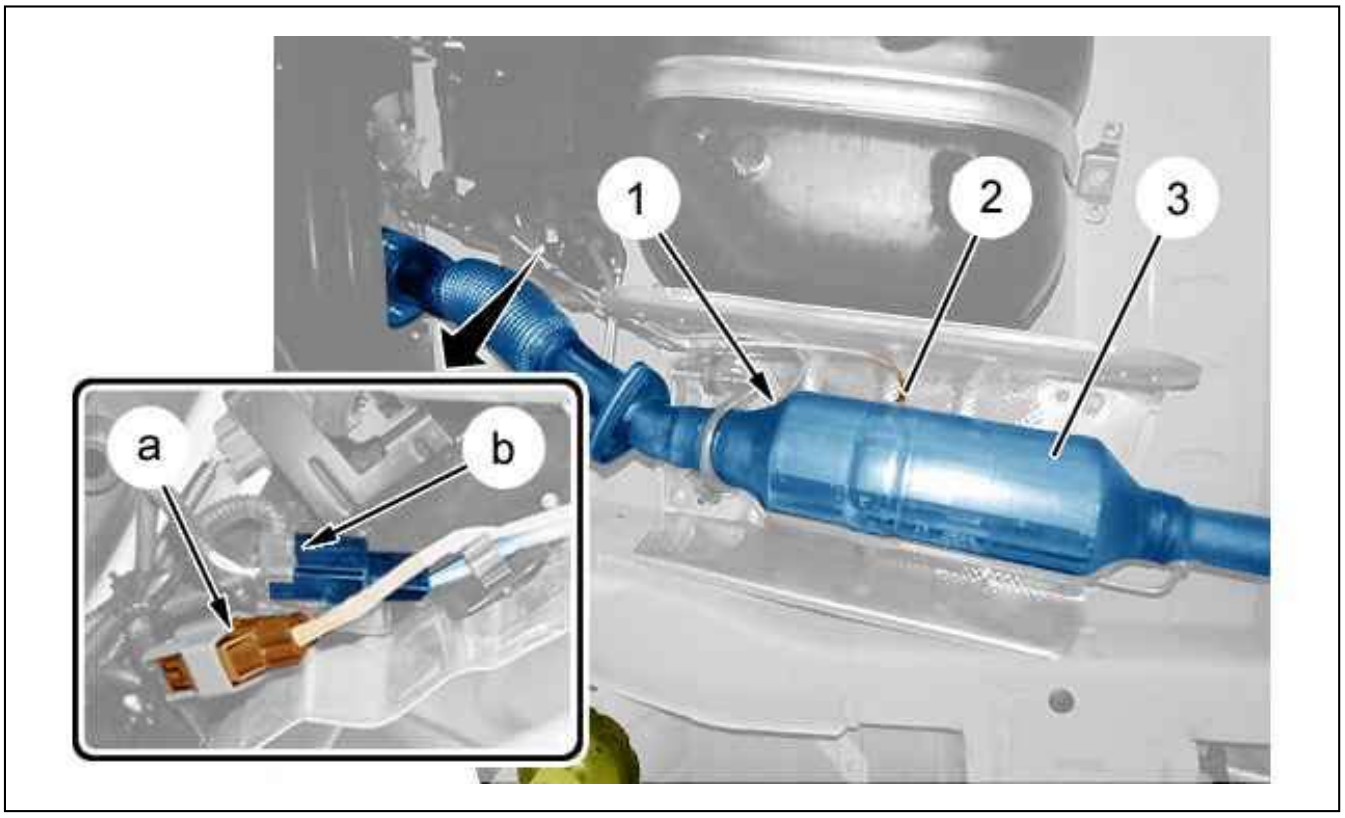

Figure : B1KG0FOD

ESSENTIAL : Before carrying out any work on the exhaust system, wait for it to cool down.

Uncouple :

- The upstream exhaust gas temperature sensor (1) from the catalytic converter/particle emission filter assembly (3
- The downstream exhaust gas temperature sensor (2) from the catalytic converter/particle emission filter assembl (3)

Unplug :

- The downstream exhaust gas temperature sensor (2) connector (at "a")
- The upstream exhaust gas temperature sensor (1) connector (at "b")

Remove :

- The upstream exhaust gas temperature sensor (1)
- The downstream exhaust gas temperature sensor (2)

2. Refitting

CAUTION : Adhere to the tightening torques .

Refit :

- The upstream exhaust gas temperature sensor (1)
- The downstream exhaust gas temperature sensor (2)

Reconnect :

- The downstream exhaust gas temperature sensor (2) connector (at "a")
- The upstream exhaust gas temperature sensor (1) connector (at "b")

Couple up :

- The upstream exhaust gas temperature sensor (1) on the catalytic converter/particle emission filter assembly (3)
- The downstream exhaust gas temperature sensor (2) on the catalytic converter/particle emission filter assembly (3)

CAUTION : Perform the operations to be carried out following reconnection of the battery.

Reconnect the battery.
Clear the memory of faults ; Using the diagnostic equipment.

REMOVING - REFITTING : EXHAUST GAS PRESSURE SENSOR

ESSENTIAL : Observe the safety and cleanliness recommendations .

1. Tooling

tool	Reference	Designation
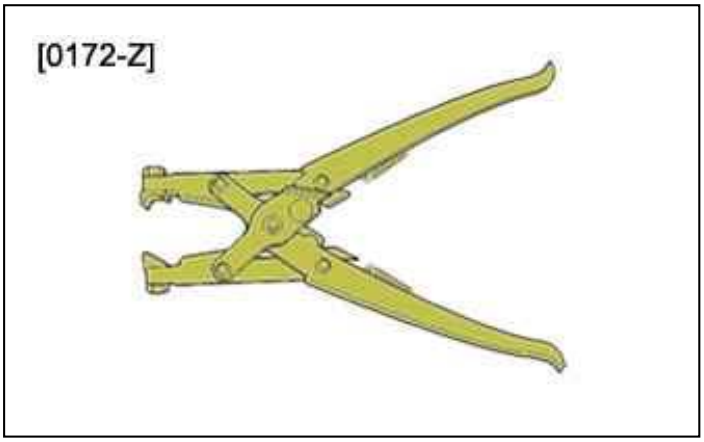 Figure : E5AB0PPT	[0172-Z]	Pliers for removing CLIC clips

2. Removing

Lift and support the vehicle with the wheels free.
Disconnect the battery.

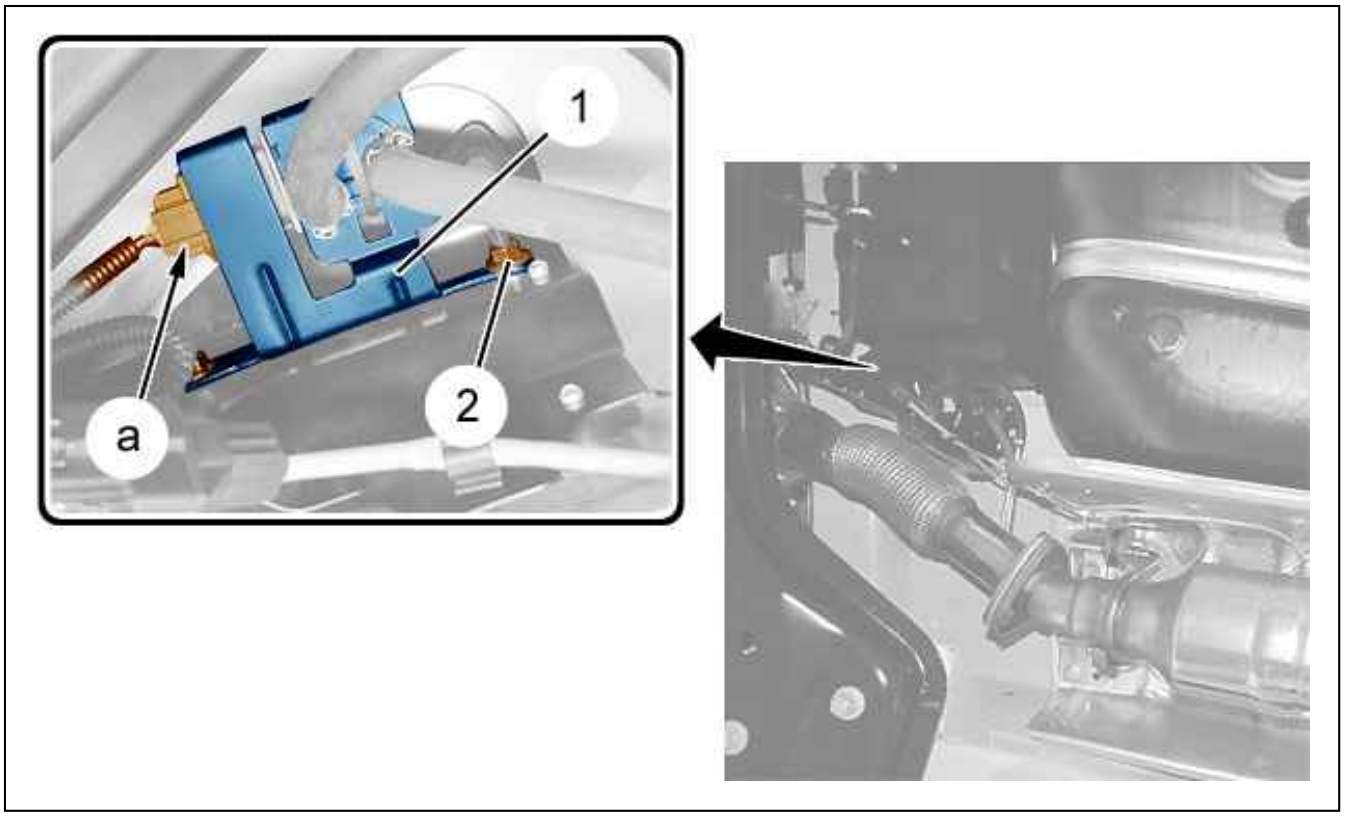

Figure : B1KG0GBD

Disconnect the connector (at "a").
Remove the nuts (2) of the exhaust gas pressure sensor support (1).
Release the exhaust gas pressure sensor holder (1) from the body.

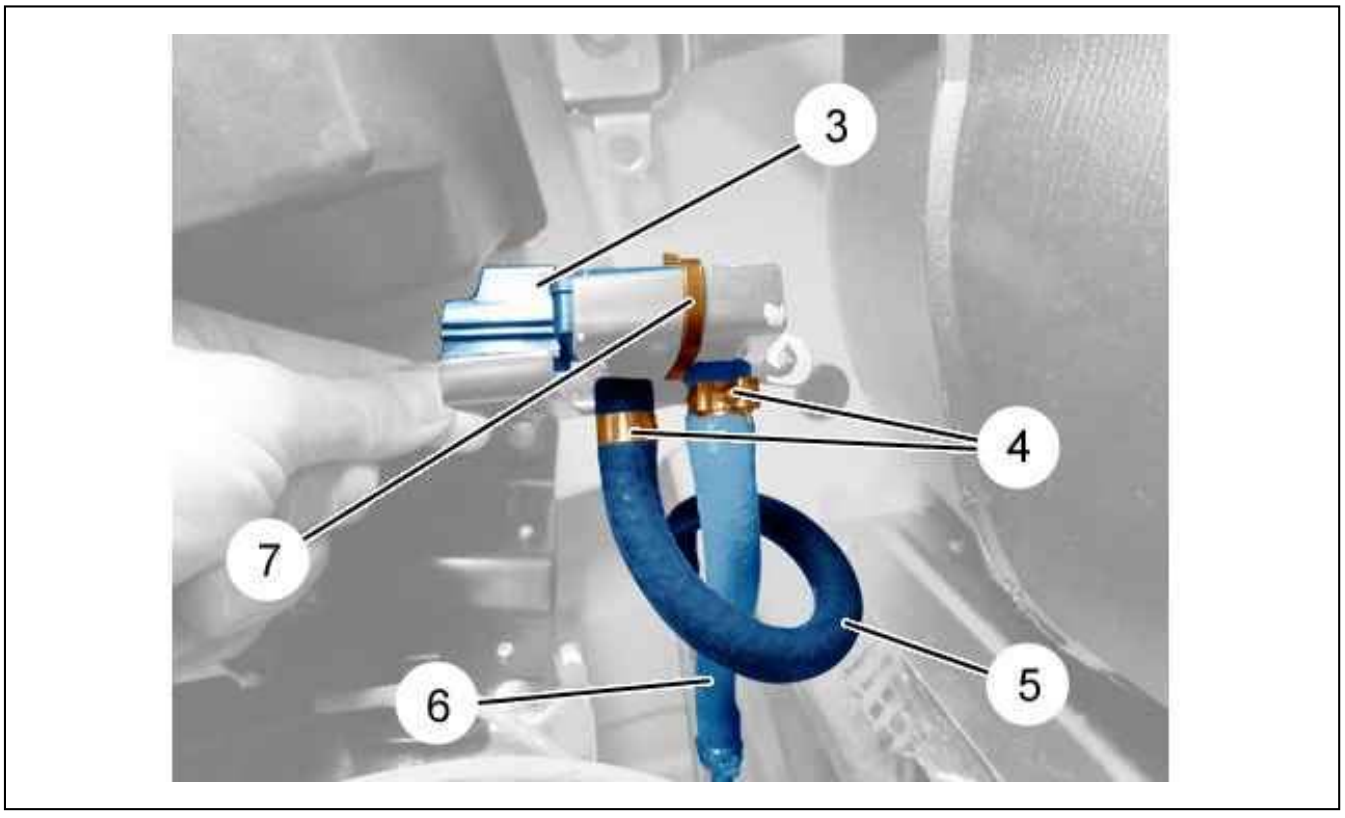

Figure : B1KG0GCD

CAUTION : Mark the positioning of the pipes (5), (6) on the exhaust gas pressure sensor (3) before disconnecting them.

Remove :

- The clips (4) ; Using tool [0172-Z]
- The downstream pressure take-off pipe (6) from the exhaust gas pressure sensor (3)
- The upstream pressure take-off pipe (5) from the exhaust gas pressure sensor (3)
- Plastic strap (7)
- The exhaust gas pressure sensor (3)

3. Refitting

Refit :

- The upstream pressure take-off pipe (5) from the exhaust gas pressure sensor (3)
- The downstream pressure take-off pipe (6) from the exhaust gas pressure sensor (3)
- The clips (4) ; Using tool [0172-Z]
- The exhaust gas pressure sensor (3) to the exhaust gas pressure sensor holder (1)
- Plastic strap (7)
- The exhaust gas pressure sensor holder (1) fitted on the body
- The nuts (2)

Connect the connector (at "a").

CAUTION : Perform the operations to be carried out following reconnection of the battery.

Reconnect the battery.
Clear the memory of faults ; Using the diagnostic equipment.

FORCED REGENERATION : PARTICLE FILTER (TECHNICAL NOTE)

ESSENTIAL : Observe the safety and cleanliness recommendations.

ESSENTIAL : Wait at least one hour before carrying out any work on the exhaust line.

1. Tooling

Diagnostic tool.

2. Forced regeneration of the particle emission filter

ESSENTIAL : Respect the safety and cleanliness recommendations that are specific to high pressure diesel injection (HDi) engines.

ESSENTIAL : Where the recommended installation is not available, carry out the forced regeneration of the particle filter outside the workshop, on an area of hard standing and remote from any inflammable materials. Make the work area secure. Ensure that no one passes or stands behind the vehicle during the forced regeneration. Put the vehicle in the "high" position (vehicle with hydraulic suspension). Check that there are no aerosols or inflammable products inside the boot. Wear heat-resistant gloves. Connect the vehicle to an approved gas extractor for this type of operation.

CAUTION : Check that the level of fuel in the tank is sufficient (minimum 20 litres).

CAUTION : Check the following fluid levels : Engine oil ; Coolant.

CAUTION : Check : The tightness of the turbocharging hoses (Risk of uncoupling).

ESSENTIAL : Remove the under-engine protection.

Start the engine and allow it to warm up (65°C minimum).
Connect the diagnostic tool on the vehicle’s central socket.
Carry out :

- Fault reading (Engine ECU)
- Fault clearing

Trigger the particle emission filter forced regeneration cycle ; Using the diagnostic equipment.
After the regeneration cycle : Allow the engine to run at idle, with the bonnet open, to help the cooling.
Stop the engine.

ESSENTIAL : Wait at least one hour before carrying out any work on the exhaust line. Wear heat-resistant gloves.

Refit the under-engine protection .

REMOVAL - REFITTING : CATALYTIC CONVERTER/PARTICLE FILTER ASSEMBLY

ESSENTIAL : Observe the safety and cleanliness instructions .

1. Removal

ESSENTIAL : Respect the safety and cleanliness requirements relating to the particle filter .

Put the vehicle on a hoist.
Disconnect the battery.

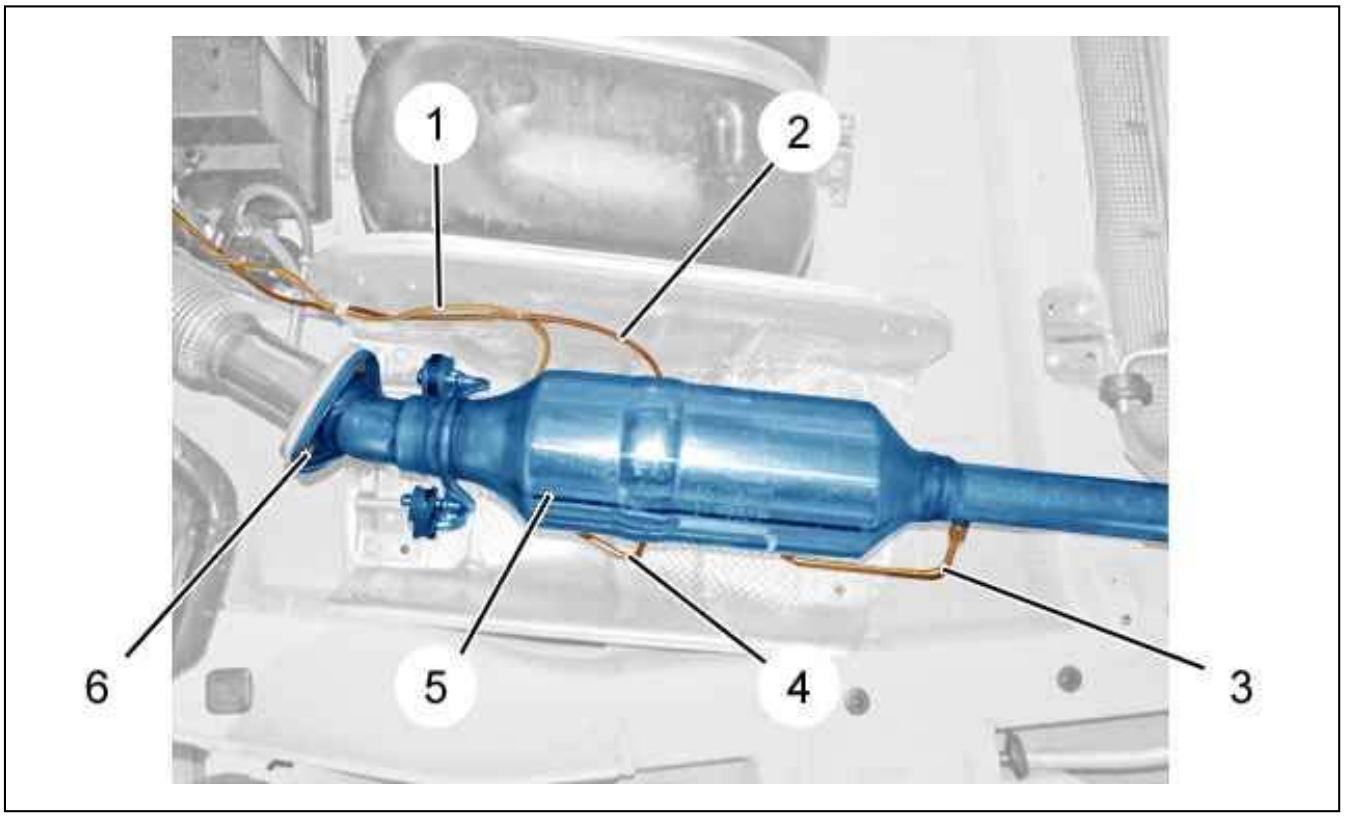

Figure : B1KG0FED

CAUTION : Note the locations and orientations of the exhaust gas pressure take-off tubes (3), (4) and temperature sensors (1), (2) on the particle filter/catalytic converter assembly (5).

Uncouple :

- The exhaust gas pressure take-off tubes (3), (4)
- The exhaust gas temperature sensors (1) , (2)
- The 3 bolts (6)

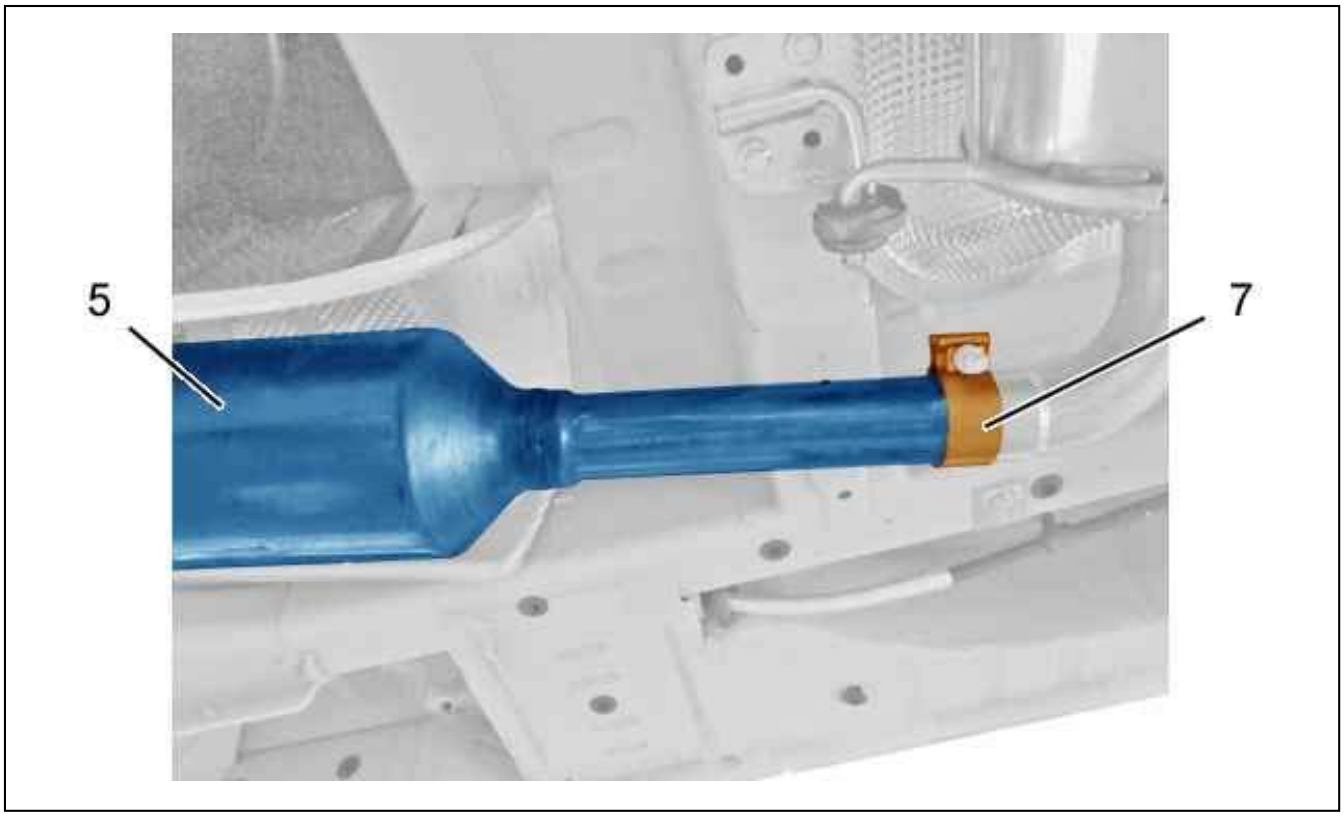

Figure : B1KG0FFD

Remove :

- The sleeve (7)
- The particle filter/catalytic converter assembly (5)

2. Refitting

CAUTION : Adhere to the tightening torques .

Check the condition of the hangers and fixings.

N.B. : Replace any defective parts (if necessary).

CAUTION : Carry out a pre-fitting to guarantee the correct positioning of the catalytic converter/particle emission filte assembly (5) and the rear silencer .

Position the sleeve (7) on the catalytic converter/particle emission filter assembly (5).
Refit the catalytic converter/particulate emission filter assembly (5) .
Refit :

- The 3 bolts (6)
- The exhaust gas temperature sensors (1), (2)
- The exhaust gas pressure take-off tubes (3), (4)

CAUTION : Perform the operations to be carried out following reconnection of the battery.

Connect the battery.

3. Checks

Start the engine.
Check :

- The absence of exhaust gas leaks
- That the exhaust gas temperature sensors (1), (2) are working ; Using the diagnostic tool

Return the vehicle to its wheels.

MODIFICATION : OXYGEN SENSOR

1. Application

Vehicles all types : Petrol injection engines.

2. Description

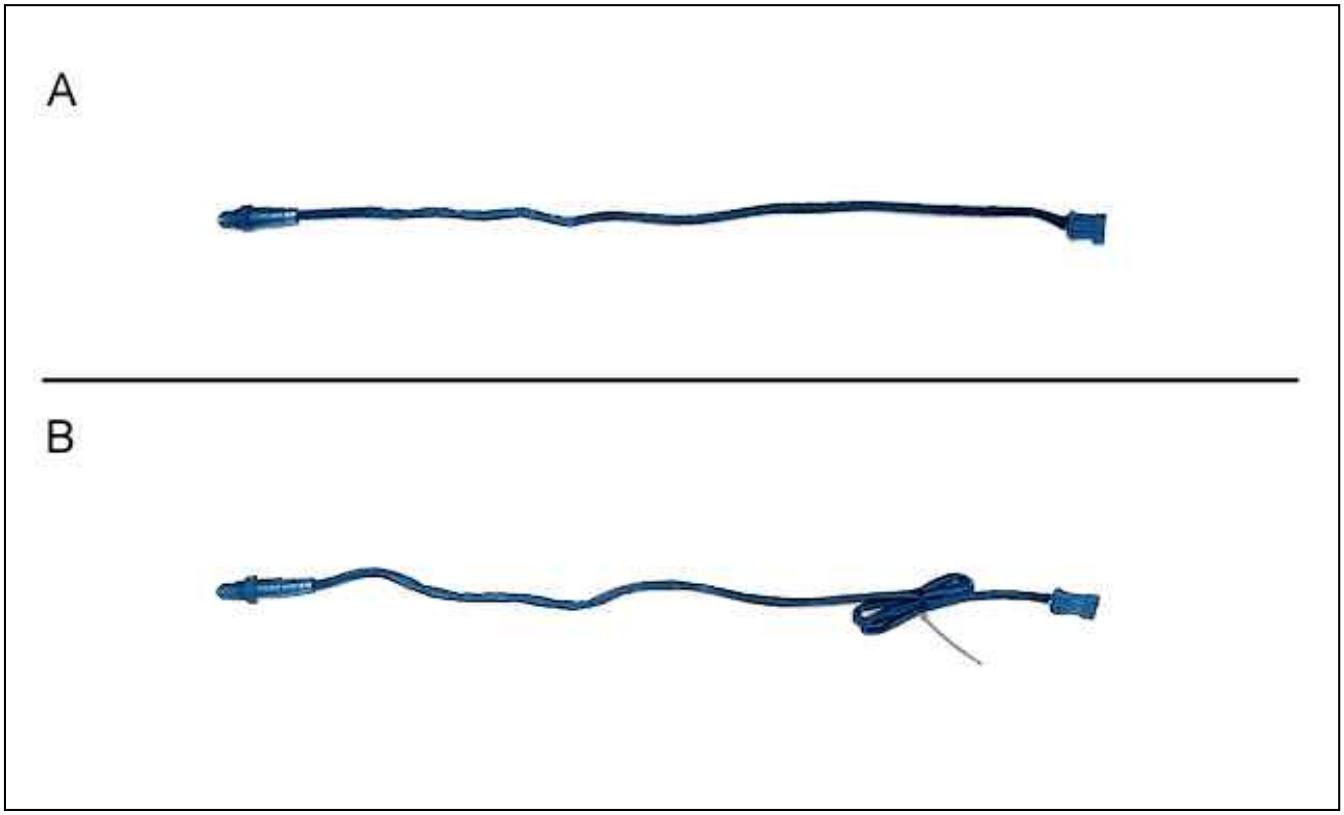

Figure : B1KT001D

Modification of the length of the oxygen sensor electrical harness.
"A" Old oxygen sensor.
"B" New oxygen sensor (Lengthened electrical harness).

3. Replacement Parts

Only the new parts will be available from the Replacement Parts Division once stocks have been exhausted.

4. Repair

The method for replacing the oxygen sensor is unchanged.

CAUTION : The electrical harness must always stay well out of range of the exhaust line . Secure the excess length o electrical harness with a zip strap.

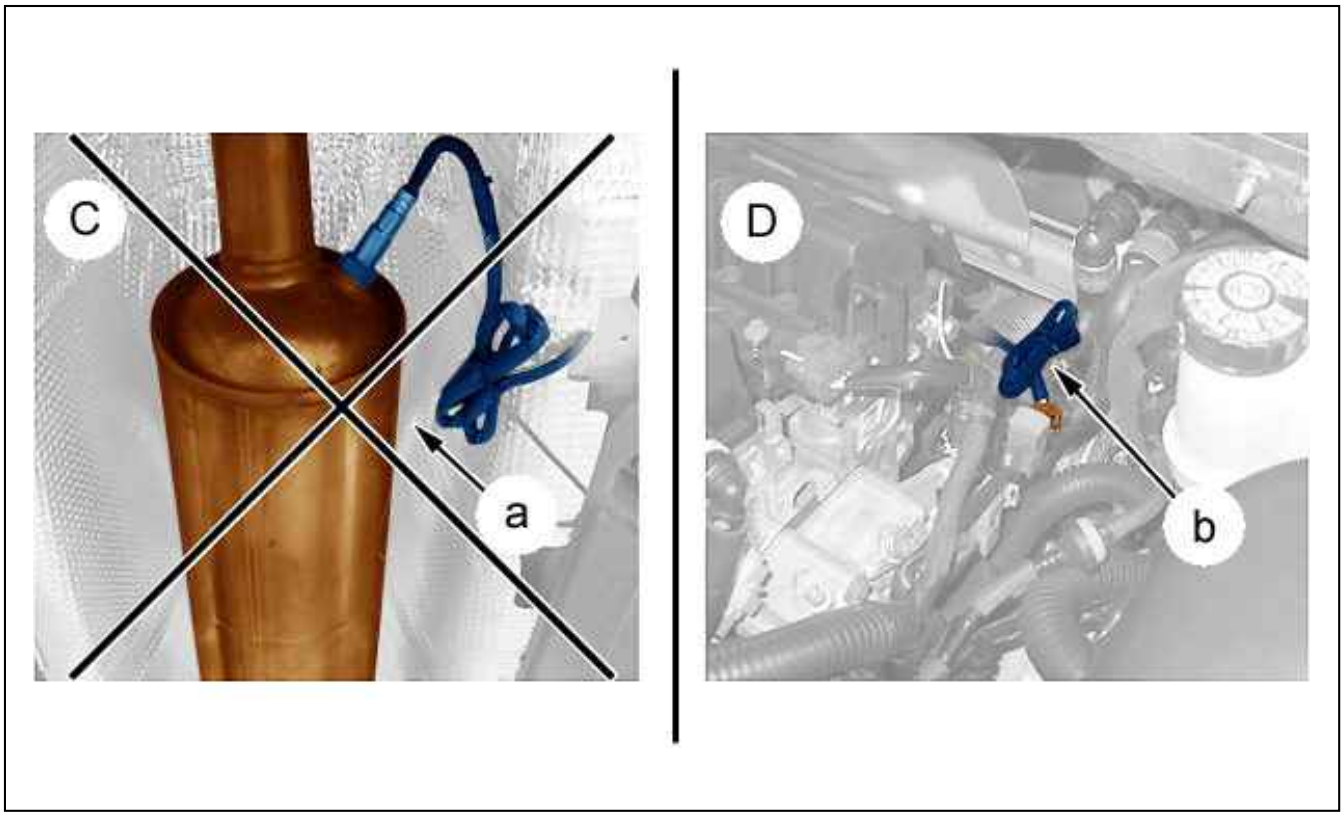

Figure : B1KT002D

"C" Assembly not correct : The excess electrical harness is secured close to the exhaust line (at " a").
"D" Assembly correct : Secure the excess electrical harness close to the connector (at " b").

REMOVING - REFITTING : INLET AIR PRESSURE/TEMPERATURE SENSOR

ESSENTIAL : Observe the safety and cleanliness recommendations .

1. Location



Figure : B1HG37AD

The inlet air pressure/temperature sensor is located under the inlet air distributor (at "a").

2. Removing

Disconnect the battery.

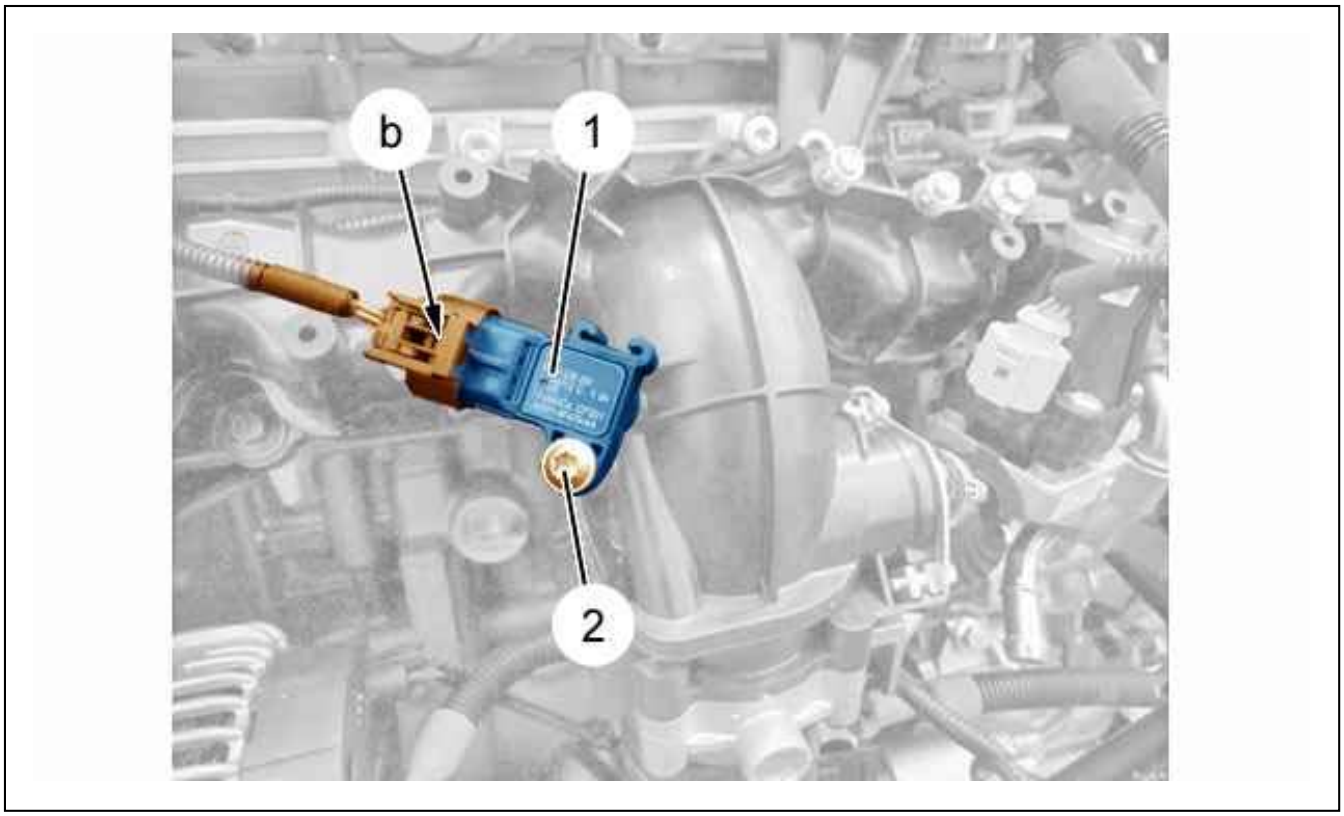

Figure : B1HG3F5D

Disconnect the connector (at "b").
Remove :

- The nut (2)
- The inlet air pressure/temperature sensor (1)

3. Refitting

CAUTION : Adhere to the tightening torques .

Refit :

- The inlet air pressure/temperature sensor (1)
- The nut (2)

Reconnect the connector (at "b").

CAUTION : Perform the operations to be carried out following reconnection of the battery.

Reconnect the battery.

CHARGE : STARTING BATTERY

New vehicles delivered to customers now have a hydrometer which permits direct displaying of the charge status.

1. Application

This procedure applies to all ready-to-use batteries.
They are fitted on new vehicles or sold as Replacement Parts (boutique, warehouse, gondola end…).
The batteries must guarantee quality and reliability which meet the requirements of our customers.
They are an addition to the new vehicle preparation ranges distributed for each model of the range.

2. Recommended tools

Approved charging equipment : See garage equipment catalogue or, failing this, obtain a limited voltage charger.
Approved battery cable.

3. General principles for charging batteries

Comply with the maximum voltage indications and the nominal current level in relation to the type and size of the battery :

- Never apply an excessive voltage or current
- Use a charger suited to the battery and the type of charge required
- Do not use a rapid charger or, if the charger has this function, use the normal charge function
- Check the condition of the battery

N.B. : The effectiveness of the charge depends on the condition of the battery.

4. Precautions to be taken

Do not charge :

- A faulty battery (White hydrometer)
- A battery coated with sulphate (Depositing of a superficial layer of lead sulphate on the plates)
- A warm battery (Risk of thermal racing and damage)

5. Charging procedure

5.1. Preliminary operations

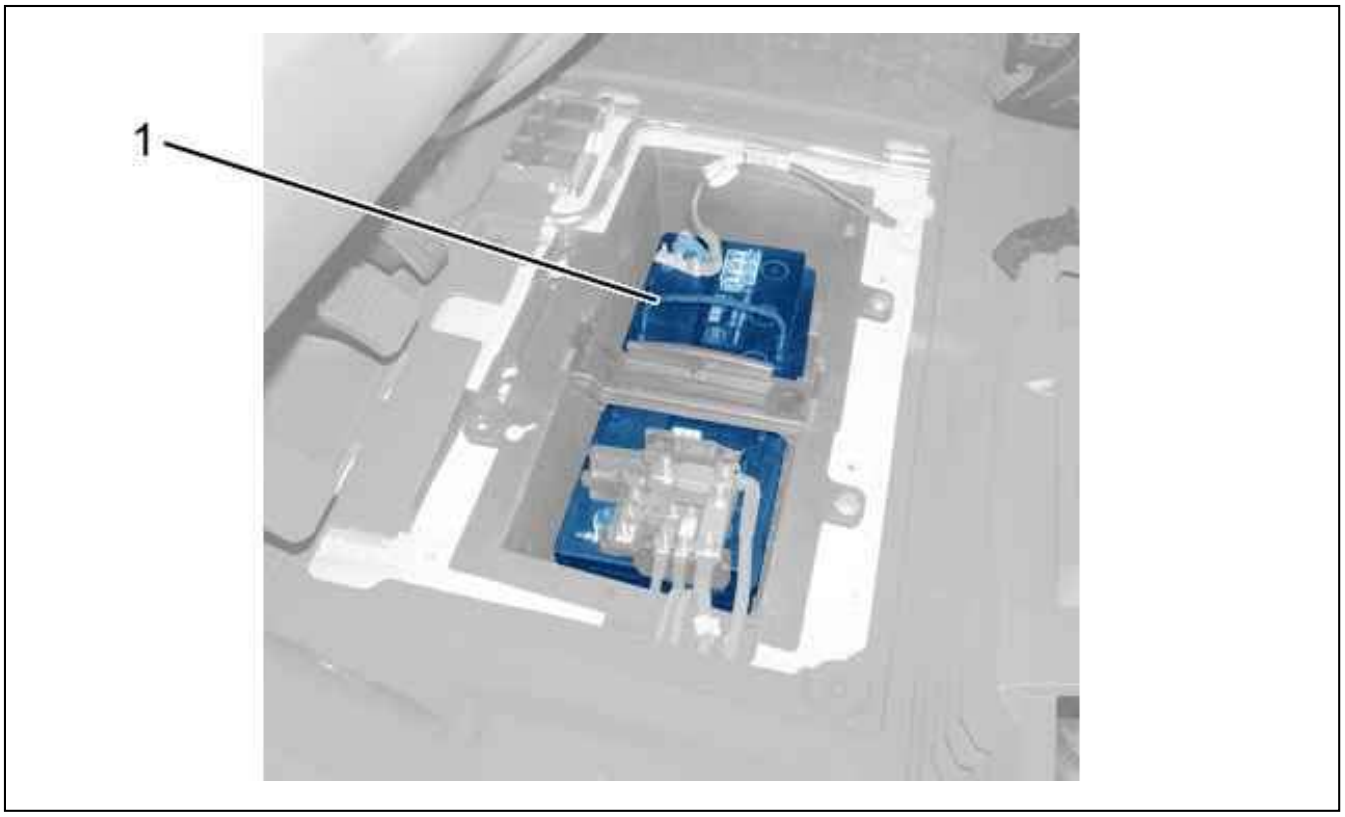

Figure : D1CP03JD

Remove the battery (1) located underneath the passenger compartment floor.

CAUTION : If the hydrometer is white, the battery is faulty : Replace the battery.

Check the conformity of the battery :

- Sealing of the case
- Absence of electrolyte leaks
- Absence of apparent signs of impact or cracks
- Status of the hydrometer

N.B. : Date of manufacture (If the battery was manufactured more than 6 months ago : Replace the battery).

5.2. Charging

Follow the operating instructions given by the manufacturer of the charger .
Check the clamps and terminals are clean . If the terminals are covered with sulphate (whitish or greenish deposit), strip and clean them.
The recharging operation must be carried out in a ventilated environment away from naked flames or any sources of sparks to prevent any risk of explosion and fire.
Do not recharge a frozen battery; it must first be thawed out to prevent the risk of an explosion; if it has frozen, have the battery checked before recharging by a specialist; they will check that the internal components have not been damaged and that the casing is not cracked, which would mean that toxic and corrosive acid could leak.
In the case of batteries with topping of up of the electrolyte only :

- Connect the battery to the charger starting with the positive cable
- Check the level (15 mm above the plates) and top up with distilled water (if necessary)

CAUTION : In the case of batteries which do not require maintenance, removal of the caps and topping up with fluid is strictly prohibited.

5.3. Automatic charger

Use the normal charging programme (Rapid charging prohibited).

5.4. Charger with limited voltage

Adjust the charging current to 1/20 of the capacity (example: 45Ah provides a charging current of 2,25A) for a charging time of 6 to 12 hours.

5.5. Limited voltage charger

Charge with a voltage limited to 14,8 V for 12 hours with a current limited to 1/4 of the capacity.

5.6. Precautions to be taken (Battery charge)

Monitor the progress of the charge regularly, ensuring in particular that the battery does not get excessively warm or does not start to bubble.
When the charge is complete, first switch off the charger and then disconnect the battery.

6. Check following charging

Check the colour of the hydrometer :

- If it is green : The battery is correct
- Refit the battery on the vehicle
- If it is not green : An additional charge is necessary, until the hydrometer turns green, without exceeding the time defined
- After 2 unsuccessful charging cycles, the battery is faulty
- Replace the battery

7. Fast starting

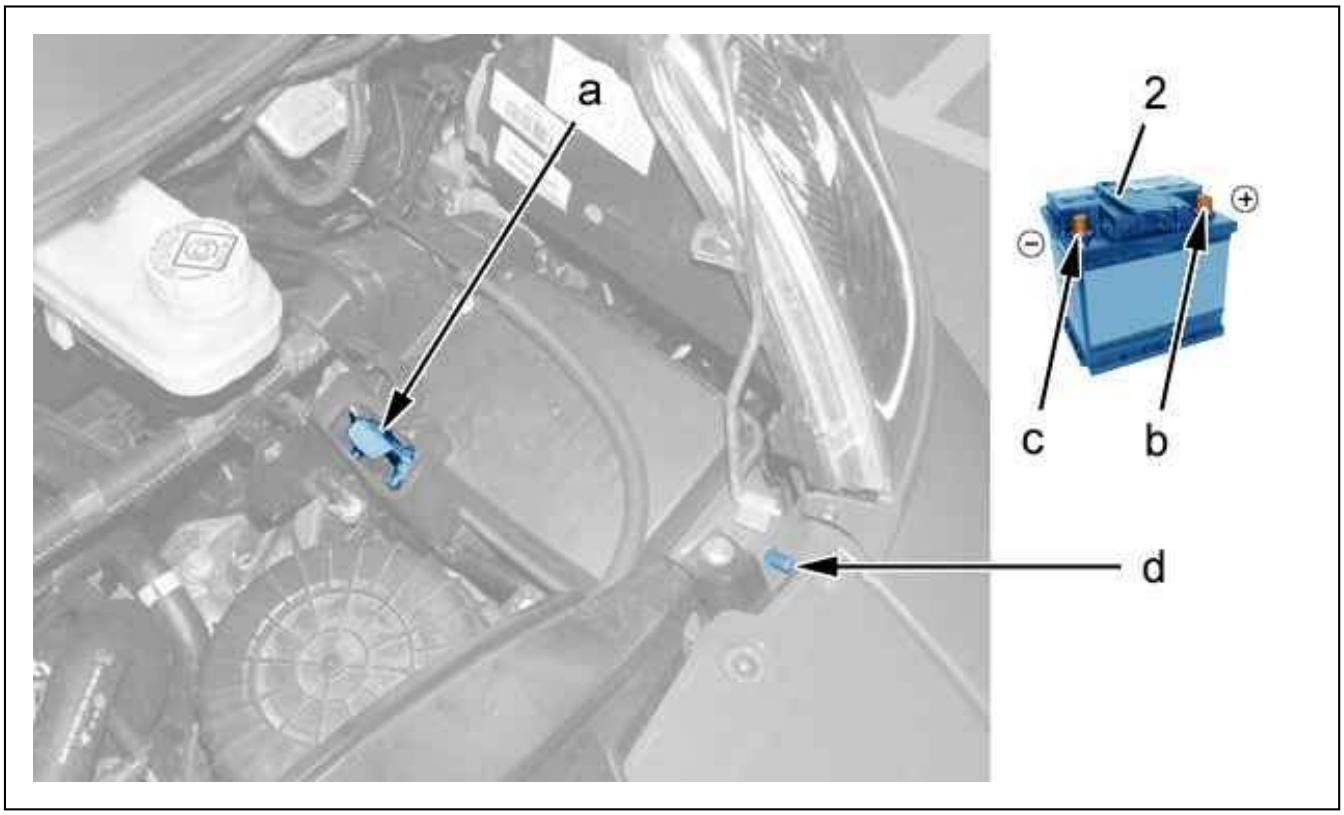

Figure : B1BPSPBD

Open the bonnet.

CAUTION : Scrupulously comply with the order of the following instructions.

Connect the red cable to the metal part of the positive terminal (+) (in "a") on the jump battery (2) (as "b").
Connect the black or green cable to the metal part of the negative terminal (-) (in "d") of the jump battery (2) (as "c").
Operate the starter ; Let the engine turn over.
Wait until it returns to idle and disconnect the cables.

MAINTENANCE : RECOMMENDED INGREDIENTS, YEAR 2006

1. Standards in force

The classification of the engine oils is established by the following recognised bodies :

- S.A.E. : Society of Automotive Engineers
- API : American Petroleum Institute
- ACEA : Association des Constructeurs Europeens d'Automobiles

2. S.A.E. standards

2.1. Engine oil grade selection table

The choice of engine oil grade depends on the climate of the country.

2.2. Préconisation des grades de viscosités

Choice of the various grades of viscosity remains dependent on use of the vehicle in the types of climate defined in the diagram below . Par exemple, l'utilisation du grade 10W 40 se limite aux pays tempérés (de -17 °C à +37 °C) ou à clima chaud.

N.B. : For any other application, the grade has to be chosen as a function of the climatic zone of the country where the vehicle is to be used.

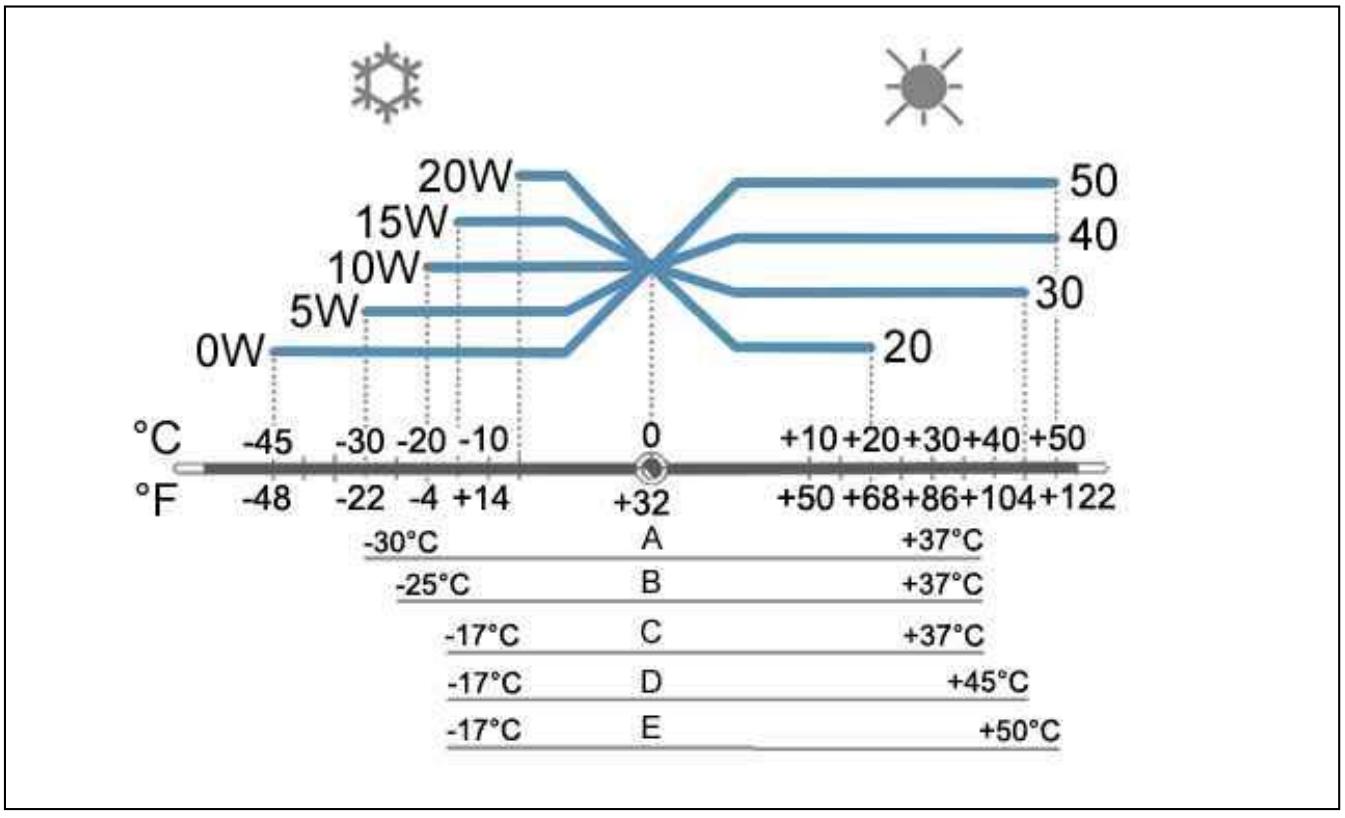

Figure : E4AP00BD

A : Very cold.
B : Cold.
C : Moderate.

D : Hot .
E : Very hot.

3. ACEA standards

3.1. Petrol and diesel mixed oils recommended by PSA

The meaning of the first letter does not change, it always refers to the engine type :

- A = Petrol and petrol/LPG dual fuel engines
- B = diesel engines

The next figure does change and refers to the following types of oil :

- 3 = High performance oils
- 4 = Oils specific to certain direct injection diesel engines
- 5 = Oils with very high performance, favouring lower fuel consumption

Examples :

- ACEA A3/B3 : Huiles mixtes hautes performances et bicarburation essence/GPL
- ACEA A5/B5 : Blended oils with very high performance, for all engines, favouring fuel economy

CAUTION : Since 2004, the ACEA has imposed mixed oils : A1/B1 , A3/B3, A3/B4, A5/B5. Therefore, all lubricants recommended by PSA are mixed ; There are no longer any oils specific to petrol or diesel.

3.2. Introduction of low ash content oils (LOW SAPS)

Oils with low ash content reduce the amount of particles entering the exhaust and so help lengthen the life of the particle filter.
The ash content changes from 1,3 % in current oils to 0,8 % in these new oils (maximum permitted values).

N.B. : LOW SAPS (Sulphated Ash Phosphorus Sulphur).

New specifications ACEA :

- C3 : Moderate ash content
- C2 : Moderate ash content and fuel economy
- C1 : Very low ash content and fuel economy

The C2 oil, specific to PSA, corresponds to a request to reduce the ash within a reasonable cost limit while maintaining fuel economy requirements.
The C2 oil is a petrol and diesel mixed oil with energy economy particularly suited to engines fitted with a particle filter.

4. API oil standards

The meaning of the first letter does not change, it always refers to the engine type :

- S = Petrol and petrol/LPG dual fuel engines
- C = diesel engines

The second letter corresponds to the evolution level of the oil (in rising order).
Example : The standard SL is stricter than the standard SJ and corresponds to an improved level of performance.

5. Qualité des huiles moteur

The engine lubrication oils are classified in line with 3 quality levels :

- Mineral oil or level 1 PSA
- Semi-synthetic oil or level 2 PSA
- Synthetic oil or level 3 PSA

ESSENTIAL : To ensure that the engines retain their performance, it is essential that only high quality engine oil is used : Level 2 PSA minimum (synthetic or semi-synthetic oils).

CAUTION : L'huile minérale ne peut être utilisée que sur les véhicules équipés de la motorisation type 384F.

CAUTION : For vehicles sold from model year 1999 (7/98), in accordance with the normal maintenance plan, the use of an approved semi-synthetic oil is imperative.

6. Nouvelle huile à économie de carburant et antipollution

Cette huile contribue aux objectifs d'économie d'énergie et de réductions des émissions polluantes visés par le groupe concerne plus particulièrement les véhicules diesel équipés de filtres à particules.

N.B. : Se référer au Chapitre 8 : restrictions pour toutes applications avec cette huile.

CAUTION : L'huile à Économie d'Énergie 5W30, au périmètre d'application restreint, notamment sur moteurs HD avec filtre à particules et moteurs à essence XU10J4RS, EW10J4S, EW12J4, EW12E4, EW10A, EW7A est retirée progressivement de la commercialisation.

7. Recommendations(in normal driving conditions)

Les moteurs PSA sont lubrifiés en première monte avec de l'huile TOTAL ACTIVA/QUARTZ INEO ECS, aux propriétés Économie de carburant et Antipollution.
Respecter les intervalles de vidanges standards :

- For vehicles with maintenance interval of 30 000 km (20 000 miles), use exclusively one of the oils TOTAL ACTIVA / QUARTZ 7000, 9000 or INEO ECS or any other oils with equivalent specifications. The specifications these oils are higher than those defined by standard ACEA A3/B3 or API SL/CF . Failing this, you should follow the maintenance schedules for severe operating conditions
- In the case of Diesel vehicles with Particle Filter, for lasting optimum operation of the PEFs, the use of low ash content oil TOTAL ACTIVA INEO ECS for France and TOTAL QUARTZ INEO ECS outside France is particularly recommended (Or any other oils with equivalent specifications)

France				
-	Recommended oil *	Description	ACEA standards	API oil standard
Petrol and diesel engines	ACTIVA INEO ECS	Synthetic anti-pollution 5W-30	C2 and A5/B5	-
	ACTIVA Energy 9000 0W-30	Synthetic 0W-30	A3/B4	SL/CF
	ACTIVA 9000 5W-40	Synthetic 5W-40	A3/B4	SL/CF
	ACTIVA 7000	Semi-synthetic 10W-40	A3/B3	SL/CF
	ACTIVA Diesel 7000 10W40			
	ACTIVA 5000 15W40**	Mineral 15W40	-	SL

* : Or any other oils with equivalent specifications.
** : For 384F type engine only.

Other countries				
-	Recommended oil *	Description	ACEA standards	API oil standards
Petrol and diesel	QUARTZ INEO ECS	Synthetic anti-pollution 5W-	C2 and A5/B5	-

engines		30		
	QUARTZ Energy 9000 0W-30	Synthetic 0W-30	A3/B4	SL/CF
	QUARTZ 9000 5W-40	Synthetic 5W-40	A3/B4	SL/CF
	QUARTZ 7000	Semi-synthetic 10W-40	A3/B3	SL/CF
	QUARTZ Diesel 700010W-40			
	QUARTZ 5000 15W40 **	Mineral 15W40	-	SL

* : Or any other oils with equivalent specifications.
** : For 384F type engine only.

8. Restrictions

N.B. : Reading of the engine specifications.

On reception, identify the vehicle by its commercial description.
Read the legislative code on the vehicle identification plate from the 3rd, 4th and 5th characters.

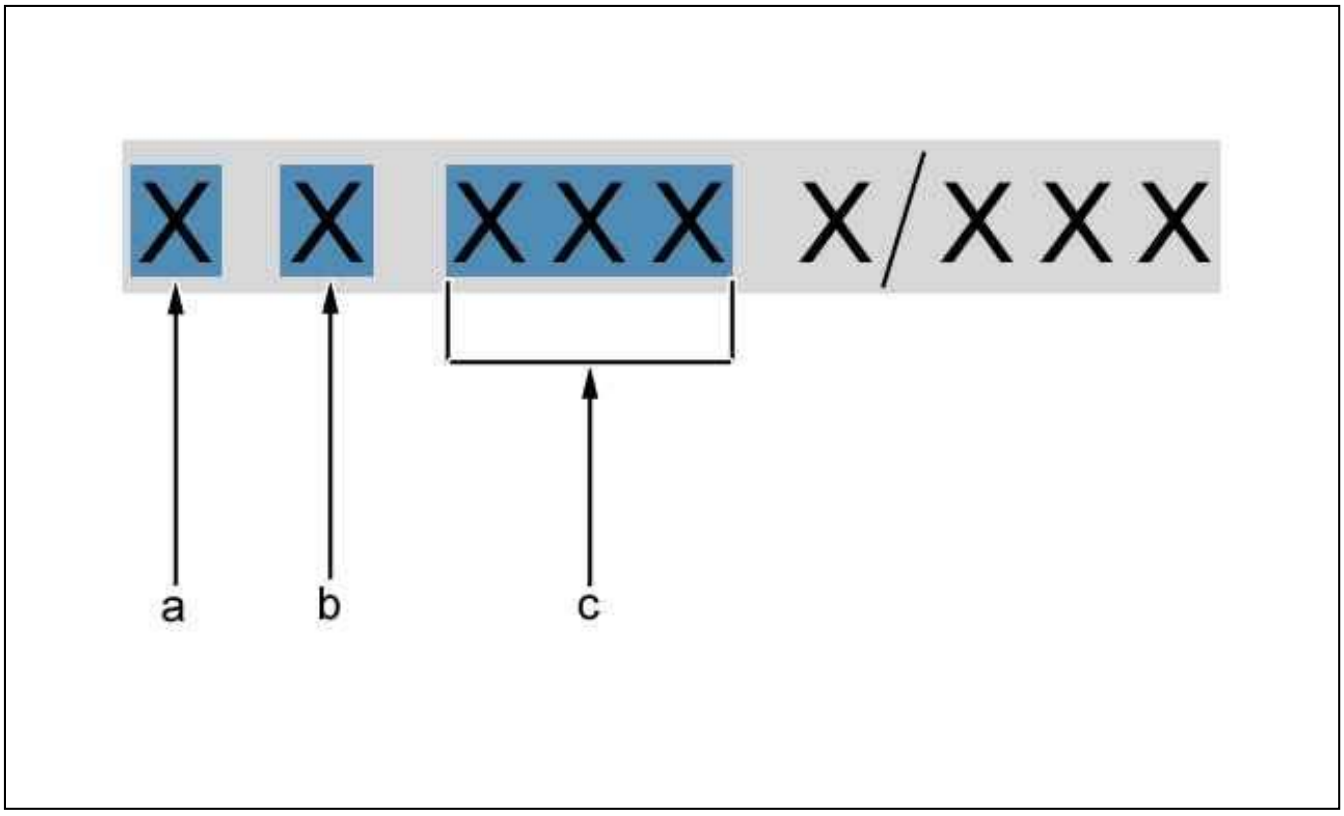

Figure : B1FP06ED

a : Family (vehicle).
b : Shape.
c : engine (legislation type).
With the engine legislative code and the country in which the work is to be carried out, identify the engine oil recommendations.

CAUTION : Category ACEA 5W30 C2 oil must not be used in engines earlier than 2000 (7/99) model year.

8.1. TU/ET engines

Engine type	Engine identification	0W40 oil	5W40 oil	10W40 oil	0W30 oil	5W30 oil	5W30 C2 oil
TU1	HFX / HFY / HFZ	OK	OK	OK	OK	OK	OK
TU3/ET3	KFW / KFV / K6D / K6E / KFU /	OK	OK	OK	OK	OK	OK
TU5	NFV / NFS / NFU / N6A / NFT / N6B	OK	OK	OK	OK	OK	OK

8.2. EW engines

Engine type	Engine identification	0W40 oil	5W40 oil	10W40 oil	0W30 oil	5W30 oil	5W30 C2 oil
EW7J4	6FZ	OK	OK	OK	OK	OK	OK
EW7A	6FY	OK	OK	OK	-	-	-
EW10J4	RFN / RFM /RFP/ RFR	OK	OK	OK	OK	OK	OK
EW10A	RFJ	OK	OK	OK	-	-	-
EW10J4S	RFK	-	OK	-	-	-	-
EW12J4	3FZ	OK	OK	OK	-	-	-
EW12E4	3FY	OK	OK	OK	-	-	-

8.3. ES engine

Engine type	Engine identification	0W40 oil	5W40 oil	10W40 oil	0W30 oil	5W30 oil	5W30 C2 oil
ES9A	XFU / XFV	OK	OK	OK	OK	OK	OK

8.4. XU engine

Engine type	Engine identification	0W40 oil	5W40 oil	10W40 oil	0W30 oil	5W30 oil	5W30 C2 oil
XU10J4RS	RFS	-	OK	-	-	-	-

8.5. TOYOTA engine

Engine type	Engine identification	0W40 oil	5W40 oil	10W40 oil	0W30 oil	5W30 oil	5W30 C2 oil	15W40 oil
384F	CFA	OK	OK	OK	OK	OK	OK	OK

8.6. dv engines

Engine type	Engine identification	0W40 oil	5W40 oil	10W40 oil	0W30 oil	5W30 oil	5W30 C2 oil
DV4TD	8HT / 8HZ / 8HX	OK	OK	OK	OK	OK	OK
DV4TED4	8HV / 8HY	OK	OK	OK	OK	OK	OK
DV6ATED4	9HX	OK	OK	OK	OK	OK	OK
DV6TED4	9HY	OK	OK	OK	OK	OK	OK
DV6TED4 with particle filter	9HZ	OK	OK	OK	-	-	OK

8.7. DW engines

Engine type	Engine identification	0W40 oil	5W40 oil	10W40 oil	0W30 oil	5W30 oil	5W30 C2 oil
DW10TD	RHY /RHV / RHU	OK	OK	OK	OK	OK	OK
DW10ATED	RHZ	OK	OK	OK	OK	OK	OK
DW10ATED4	RHW	OK	OK	OK	OK	OK	OK

DW10ATED with particle filter	RHS/	OK	OK	OK	-	-	OK
DW10ATED4 with particle filter	RHT/ RHM	OK	OK	OK	-	-	OK
DW10BTED	RHX	OK	OK	OK	OK	OK	OK
DW10BTED4 with particle filter	RHR / RHL	OK	OK	OK	-	-	OK
DW12BTED4 with particle filter	4HP / 4HR / 4HS / 4HT	OK	OK	OK	-	-	OK
DW12UTED	4HY	OK	OK	OK	OK	OK	OK
DW12TED4 with particle filter	4HW / 4HX	OK	OK	OK	-	-	OK
DW8	WJZ	OK	OK	OK	OK	OK	OK
DW8B	WJY / WJX	OK	OK	OK	OK	OK	OK

8.8. DT engine

Engine type	Engine identification	0W40 oil	5W40 oil	10W40 oil	0W30 oil	5W30 oil	5W30 C2 oil
DT17	UHZ	OK	OK	OK	-	-	OK

8.9. SOFIM engines

Engine type	Engine identification	0W40 oil	5W40 oil	10W40 oil	0W30 oil	5W30 oil	5W30 C2 oil
F28DT	8140.43S / 8140.23	OK	OK	OK	OK	OK	OK
F28DTGV	8140.43 N	OK	OK	OK	OK	OK	OK

9. Engine oils

9.1. France

-	All-purpose mixed oil
Metropolitan France	TOTAL ACTIVRAC S.A.E. standards : 10W40

-	TOTAL ACTIVA	TOTAL ACTIVA diesel
-	Mixed oils for all engines	Oil specifically for diesel engine
Metropolitan France	INEO ECS 5W30 / 9000 Energy 0W30 / 9000 5W40 / 7000 10W40	7000 10W40
New Caledonia	9000 5W40 / 7000 15W50 / 7000 10W40	7000 15W50 / 7000 10W40
Guadeloupe		
Saint Martin		
Reunion		
Martinique		
Guyana		
Tahiti		
Mauritius		
Mayotte		
INEO ECS 5W30 : Huiles mixtes à bas taux de cendres pour tous moteurs permettant une économie de carburant et des effets antipollution		

9.2. Europe

-	TOTAL QUARTZ	TOTAL QUARTZ diesel

-	Mixed oils for all engines	Oil specifically for diesel engines
Germany	INEO ECS 5W30 / 9000 Energy 0W30 / 9000 5W40 / 7000 10W40	7000 10W40
Austria	INEO ECS 5W30 / 9000 Energy 0W30 / 9000 5W40 / 7000 10W40	7000 10W40
Belgium	INEO ECS 5W30 / 9000 Energy 0W30 / 9000 5W40 / 7000 10W40	7000 10W40
Bosnia	INEO ECS 5W30 / 9000 Energy 0W30 / 9000 5W40 / 7000 10W40	7000 10W40
Bulgaria	INEO ECS 5W30 / 9000 Energy 0W30 / 9000 5W40 / 7000 10W40	7000 10W40
Cyprus	INEO ECS 5W30 / 9000 Energy 0W30 / 9000 5W40 / 7000 10W40 / 7000 15W50	7000 10W40
Croatia	INEO ECS 5W30 / 9000 Energy 0W30 / 9000 5W40 / 7000 10W40	7000 10W40
Denmark	INEO ECS 5W30 / 9000 Energy 0W30 / 9000 5W40 / 7000 10W40	7000 10W40
Spain	INEO ECS 5W30 / 9000 Energy 0W30 / 9000 5W40 / 7000 10W40/ 7000 15W50	7000 10W40
Estonia	INEO ECS 5W30 / 9000 Energy 0W30 / 9000 5W40 / 7000 10W40	7000 10W40
Finland	INEO ECS 5W30 / 9000 Energy 0W30 / 9000 5W40 / 7000 10W40	7000 10W40
Great Britain	INEO ECS 5W30 / 9000 Energy 0W30 / 9000 5W40 / 7000 10W40	7000 10W40
Greece	INEO ECS 5W30 / 9000 Energy 0W30 / 9000 5W40 / 7000 10W40/ 7000 15W50	7000 10W40
Holland	INEO ECS 5W30 / 9000 Energy 0W30 / 9000 5W40 / 7000 10W40	7000 10W40
Hungary	INEO ECS 5W30 / 9000 Energy 0W30 / 9000 5W40 / 7000 10W40	7000 10W40
Italy	INEO ECS 5W30 / 9000 Energy 0W30 / 9000 5W40 / 7000 10W40	7000 10W40
Ireland	INEO ECS 5W30 / 9000 Energy 0W30 / 9000 5W40 / 7000 10W40	7000 10W40
Iceland	INEO ECS 5W30 / 9000 Energy 0W30/ 9000 5W40/ 7000 10W40	7000 10W40
Latvia	INEO ECS 5W30 / 9000 Energy 0W30 / 9000 5W40 / 7000 10W40	7000 10W40
Lithuania	INEO ECS 5W30 / 9000 Energy 0W30 / 9000 5W40 / 7000 10W40	7000 10W40
Macedonia	INEO ECS 5W30 / 9000 Energy 0W30 / 9000 5W40 / 7000 10W40	7000 10W40
Malta	INEO ECS 5W30 / 9000 Energy 0W30 / 9000 5W40 / 7000 10W40 / 7000 15W50	7000 10W40
Moldavia	INEO ECS 5W30 / 9000 Energy 0W30 / 9000 5W40 / 7000 10W40	7000 10W40
Norway	INEO ECS 5W30 / 9000 Energy 0W30 / 9000 5W40 / 7000 10W40	7000 10W40
Poland	INEO ECS 5W30 / 9000 Energy 0W30 / 9000 5W40 / 7000 10W40	7000 10W40
Portugal	INEO ECS 5W30 / 9000 Energy 0W30 / 9000 5W40 / 7000 10W40	7000 10W40
Czech Republic	INEO ECS 5W30 / 9000 Energy 0W30 / 9000 5W40 / 7000 10W40	7000 10W40
Roumania	INEO ECS 5W30 / 9000 Energy 0W30 / 9000 5W40 / 7000 10W40 / 7000 15W50	7000 10W40
Russia	INEO ECS 5W30 / 9000 Energy 0W30 / 9000 5W40 / 7000 10W40	7000 10W40
Slovenia	INEO ECS 5W30 / 9000 Energy 0W30 / 9000 5W40 / 7000 10W40	7000 10W40
Slovakia	INEO ECS 5W30 / 9000 Energy 0W30/ 9000 5W40/ 7000 10W40	7000 10W40
Sweden	INEO ECS 5W30 / 9000 Energy 0W30 / 9000 5W40 / 7000 10W40	7000 10W40
Switzerland	INEO ECS 5W30 / 9000 Energy 0W30 / 9000 5W40 / 7000 10W40	7000 10W40
Turkey	INEO ECS 5W30 / 9000 Energy 0W30 / 9000 5W40 / 7000 10W40 / 7000 15W50	7000 10W40
Ukraine	INEO ECS 5W30 / 9000 Energy 0W30 / 9000 5W40 / 7000 10W40	7000 10W40
Serbia-Montenegro	INEO ECS 5W30 / 9000 Energy 0W30 / 9000 5W40 / 7000 10W40	7000 10W40

INEO ECS 5W30 : Huiles mixtes à bas taux de cendres pour tous moteurs permettant une économie de carburant et

des effets antipollution

9.3. Oceania

-	TOTAL QUARTZ	TOTAL QUARTZ diesel
-	Mixed oils for all engines	Oil specifically for diesel engines
Australia	INEO ECS 5W30 / 9000 5W40 / 7000 10W40	7000 10W40
New Zealand		
INEO ECS 5W30 : Huiles mixtes à bas taux de cendres pour tous moteurs permettant une économie de carburant et des effets antipollution		

9.4. Africa

-	TOTAL QUARTZ	TOTAL QUARTZ diesel
-	Mixed oils for all engines	Oil specifically for diesel engines
Algeria	9000 5W40 / 7000 10W40 / 7000 15W50 / 5000 15W40 / 5000 20W50	7000 10W40 / 5000 15W40
South Africa		
Benin		
Burkina		
Burundi		
Cameroon		
Central African Republic		
Congo		
Ivory Coast		
Djibouti		
Egypt		
Érythrée		
Ethiopia		
Gabon		
Gambia		
Ghana		
Guinea		
Kenya		
Madagascar		
Malawi		
Mali		
Mauritania		
Mozambique		
Morocco		
Nigeria		
Niger		
Uganda		
Rwanda		
Somalia		

Senegal		
Tunisia		
Tanzania		
Chad		
Togo		
Zambia		
Zimbabwe		

9.5. Central and South America

-	TOTAL QUARTZ	TOTAL QUARTZ diesel
-	Mixed oils for all engines	Oil specifically for diesel engines
Argentina	9000 5W40 / 7000 10W40 / 7000 15W50 / 5000 15W40 / 5000 20W50	7000 10W40 / 5000 15W40
Brazil		
Chile		
Cuba		
Costa Rica		
Haiti		
Jamaica		
Mexico		
Paraguay		
Puerto Rico		
Uruguay		

9.6. South East Asia

-	TOTAL QUARTZ	TOTAL QUARTZ diesel
-	Mixed oils for all engines	Oil specifically for diesel engines
China	INEO ECS 5W30 / 9000 5W40 / 7000 10W40 / 5000 10W40 / 7000 15W50 / 7000 5W30	7000 10W40 / 5000 15W40
South Korea	INEO ECS 5W30 / 9000 5W40 / 7000 10W40	
Hong Kong	INEO ECS 5W30 / 9000 5W40 / 7000 15W50	
India	9000 5W40 / 7000 15W50	
Indonesia	9000 5W40 / 7000 15W50	
JAPAN	INEO ECS 5W30 / 9000 5W40 / 7000 10W40 / 7000 15W50	
Malaysia	9000 5W40 / 7000 15W50	
Pakistan		
Philippines		
Singapore		
Taiwan	9000 5W40 / 7000 10W40 / 7000 15W50	
Thailand	9000 5W40 / 7000 15W50	
Vietnam		
Cambodia		

INEO ECS 5W30 : Huiles mixtes à bas taux de cendres pour tous moteurs permettant une économie de carburant et des effets antipollution

9.7. Middle East

-	TOTAL QUARTZ	TOTAL QUARTZ diesel
-	Mixed oils for all engines	Oil specifically for diesel engines
Saudi Arabia	9000 5W40 / 7000 15W50 / 5000 15W40 / 5000 20W50	7000 10W40 / 5000 15W40
Bahrain		
Dubai		
United Arab Emirates		
Iran	9000 5W40 / 7000 10W40 / 7000 10W50 / 5000 15W40 / 5000 20W50	
Israel	9000 5W40 / 7000 15W50 / 5000 15W40 / 5000 20W50	
Jordan		
Kuwait		
Lebanon		
Oman		
Qatar		
Syria		
Yemen		

10. gearbox oil

Type of gearbox	Country	Type of oil
Manual gearbox and piloted manual gearbox	All countries	TOTAL TRANSMISSION BV 75W80 (reference PR 9730 A2)
		Special oil (reference PR : 9736 41)
MCP piloted gearbox actuator	All countries	Special oil (reference PR : 9979.A4)
Gearboxes Type MMT	All countries	Special oil (reference PR : 9730.A8)
MB3 automatic gearbox	All countries	TOTAL FLUIDE ATX
		TOTAL FLUIDE AT 42
		Special oil (reference PR : 9730 A6)
4HP20 and AL4 automatic gearboxes	All countries	Special oil (reference PR : 9736 22)
AM6 automatic gearbox	All countries	Special oil (reference PR : 9980 D4)
Transfer box - Rear axle	All countries	TOTAL TRANSMISSION X4 (reference PR : 9730 A7)

11. Power steering fluid

power assisted steering	Country	Type of oil
All vehicles up to CITROËN C5 and PEUGEOT 307 exclusive (except 206 with electric pump unit)	All countries	TOTAL FLUIDE ATX : Special oil (part n PR : 9730 A6)
All vehicles from CITROËN C5 and PEUGEOT 307 (206 with electropump assembly)	All countries	TOTAL FLUIDE LDS : Special oil (PR No 9979 A3 or 9730 A5)
All vehicles	Very cold	TOTAL FLUIDE DA : Special oil RP

	country	reference 9730 A5

12. Engine coolant

	-	part no PR	
Country	Packaging	GLYSANTIN G33	REVKOGEL 2000
All countries	2 litres	9979 70	9979 72
	5 litres	9979 71	9979 73
	20 litres	9979 76	9979 74
	210 litres	9979 77	9979 75

Fluid with protection to : -35 °C.

13. Brake fluid

Synthetic brake fluid			
Country	Brake fluid	Packaging	part no PR
All countries	Brake fluid : DOT4	0,5 litre	9979 05
		1 litre	9979 06
		5 litres	9979 07

14. Hydraulic circuit

All countries	Standard	Packaging	Reference citroën
TOTAL FLUIDE LDS	Orange colour	1 litre	9979 A3
TOTAL LHM PLUS	Coloured green	1 litre	9979 A1
TOTAL LHM PLUS Very Cold Climate	Coloured green	1 litre	9979 A2

CAUTION : TOTAL FLUIDE LDS oil cannot be mixed with TOTAL LHM PLUS oil.

15. Screen washer fluid

Country	Packaging	part no PR	part no PR	part no PR
All countries	Concentrated : 250 ml	9980 33	ZC 9875 953U	9980 56
	Fluid ready for use : 1 litre	9980 06	ZC 9875 784U	-
	Fluid ready for use : 5 litres	9980 05	ZC 9885 077U	ZC 9875 279U

16. Greasing

Country	Type	NLGI standards
All countries	TOTAL MULTIS 2	2
	TOTAL PETITS MECANISMES	-

N.B. : NLGI : National Lubricating Grease Institute.

REMOVING - REFITTING : HYDRAULIC VALVE BLOCK (ABS/ESP)

ESSENTIAL : Observe the safety and cleanliness recommendations .

1. Tooling

Pedal press.
Diagnostic tool.

2. Removing

Disconnect the battery.
Position the pedal press on the brake pedal in order to stem the flow of brake fluid when disconnecting the brake lines.
Remove :

- The front LH headlamp
- The rubber protection (according to equipment)

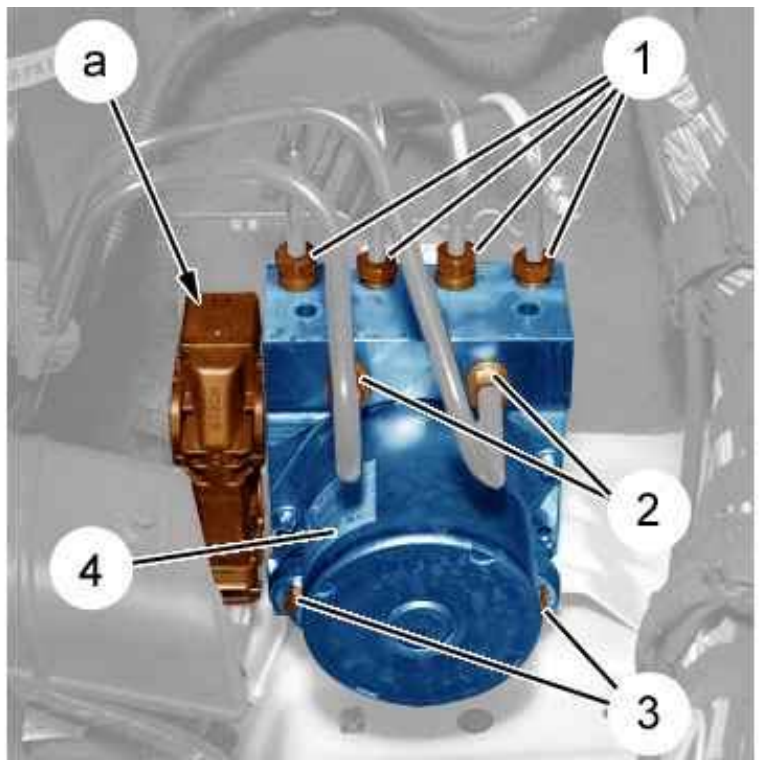

Figure : B3FG1YLD

Disconnect the connector (at "a").
Disconnect the connectors (1) and (2) (beware of escaping fluid).

N.B. : Do not apply force to the hydraulic pipes.

Unscrew the nuts (3).
Remove the hydraulic valve block (4).

CAUTION : Plug the inlets and outlets of the hydraulic valve block (4) to prevent any foreign bodies getting in.

3. Refitting

CAUTION : Remove the plugs from the apertures of the hydraulic valve block before fitting the brake pipes.

N.B. : The hydraulic valve block (4) is delivered full of brake fluid .

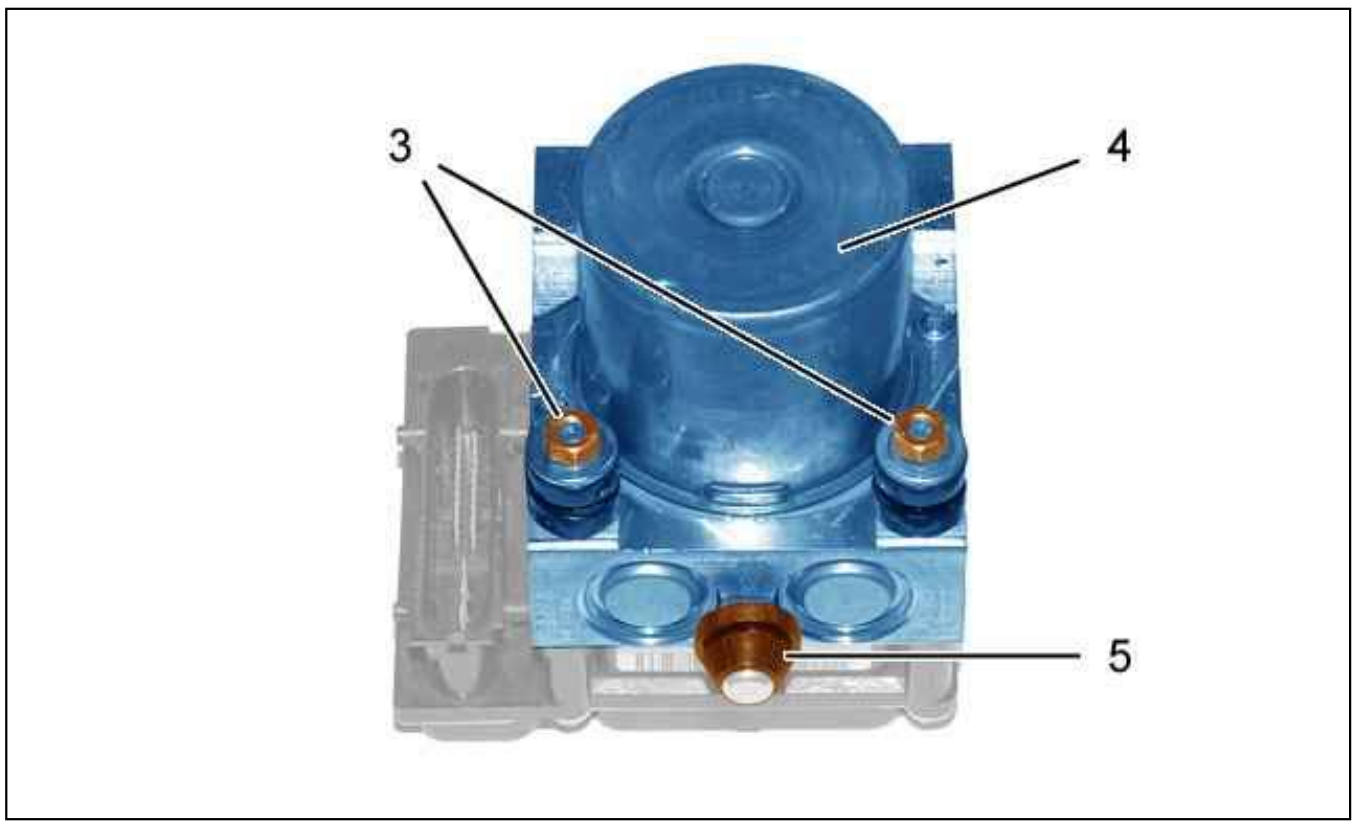

Figure : B3FP7MZD

Check that the rubber pad (5) is present (according to equipment).
Refit the hydraulic valve block (4) onto its support.
Engage the rubber pad (5) in its support (according to equipment).

CAUTION : Adhere to the tightening torques .

Tighten the nuts (3).
Recouple unions (2) and (1).
Connect the connector (at "a").
Refit :

- The rubber protection (according to equipment)
- The front LH headlamp

Remove the pedal push .

CAUTION : Perform the operations to be carried out following reconnection of the battery.

Reconnect the battery.
Bleed the brake system .

3.1. Vehicle with ESP

Connect the diagnostic tool to the vehicle’s diagnostic socket.
Carry out an global test.
Start communication by ECU.
To calibrate the steering wheel angle sensor, go to the replacement parts menu, longitudinal acceleration sensor, calibration of the longitudinal acceleration sensor.
To calibrate the longitudinal acceleration sensor, go to the replacement parts menu, switch module at the steering wheel, calibration of the steering wheel angle sensor (CAV).

3.2. Refitting (continued)

Carry out :

- Perform a road test
- Reading of the fault codes

TECHNICAL NOTE : BLEEDING THE BRAKE SYSTEM

CAUTION : The use of DOT4 brake fluid for the brake circuits is compulsory.

CAUTION : During the bleeding operation : Keep the fluid topped up in the reservoir and complete it.

N.B. : Use only clean fluid free from bubbles. Avoid any introduction of impurities into the hydraulic system.

1. Bleeding the primary braking circuit

CAUTION : Do not switch on the ignition at any time during the operation.

N.B. : Bleed the primary circuit until clean, non-foaming brake fluid is obtained.

There are 2 procedures for bleeding the primary brake circuit.

1.1. Bleeding the primary braking circuit (With the bleeding device)

Bleed the circuit following the instructions for use of the equipment.

1.2. Bleeding the primary braking circuit (without brake bleeding equipment)

N.B. : Two operators are necessary.

Couple a transparent tube on the bleed screw .
Press the brake pedal slowly.
Open the bleed screw .
Hold the pedal fully down.
Close the bleed screw .
Allow the brake pedal to return naturally.
Repeat the operation until the fluid running out is clean and free from air bubbles.
Proceed in the same way for the other wheels.

N.B. : Check that the wheels rotate freely when the parking brake is released .

1.3. Checking : Bleeding the primary braking circuit

At the end of the bleed programme, check and top up, if necessary, the brake fluid level.
Check the travel of the brake pedal (no extension).
If the travel is long and spongy, repeat the bleed procedure.
Start the engine.
Check the travel of the brake pedal (no extension) ; Road test the vehicle (if necessary).
If brake pedal travel is not correct ; Bleed the secondary brake circuit.

2. Bleed the secondary brake circuit

Bleeding of the secondary braking circuit is done with a diagnostic tool.
This procedure is only carried out if the primary brake circuit has been bled.
Continue the procedure for bleeding of the hydraulic circuit as defined by the diagnostic tool.
At the end of the bleed programme, check and top up, if necessary, the brake fluid level.
Check the brake pedal travel (no extension), otherwise repeat the bleeding procedure.

CHECKING AND ADJUSTING VALUES : BRAKING SYSTEM

ESSENTIAL : Observe the safety and cleanliness recommendations .

1. Brake disc - Brake drum - Brake pads - Brake shoes

Refer to the method "Checking : Front brake disc - Rear brake disc - Rear brake drum - Brake pads - Brake shoes".

2. Vacuum pump

N.B. : Engine idling.

Vehicle	RELAY (U9)
Engine version	SOFIM F30DT
Oil temperature	80 ± 2°C

Vacuum supplied by the vacuum pump : Between 850 mbar and 1 bar in less than 30 seconds.

3. Braking system compensator (Checking values)

Vehicle not affected.

4. Checking of the brake fluid

CAUTION : Brake fluid is highly corrosive to paintwork. If any is projected onto the bodywork, clean the surface immediately.

4.1. Tooling

Brake fluid tester (*)		
make	Reference	Type
SURETEST	TLF	Measures the boiling point of the brake fluid
DOW AUTOMOTIVE	BETATEST	
FACOM TOOLS	DF 16	
EBT	06.1	Measures the specific gravity of the brake fluid

(*) Non-exhaustive list, refer to the catalogue "Tools and Equipment".

4.2. Checking

Remove the brake fluid reservoir filter.

ESSENTIAL : Any contamination of the brake fluid is forbidden. The brake fluid should be clear and free from sediments or floating substances.

Check the fluid, following the instructions provided by the equipment supplier.

Checking values	
Brake fluid	Boiling point (minimum humidity)
DOT3	140 °C
DOT4	155 °C
DOT5	180 °C
DOT5.1	190 °C

N.B. : If the value checked is lower than the value for the "minimum humidity" boiling point, or within a tolerance of + 10 % of this value, replace the brake fluid (See the corresponding operation).

ESSENTIAL : Use only approved and recommended hydraulic fluids.

N.B. : The fluids DOT3, DOT4 and DOT5.1 are compatible.

CAUTION : The fluid DOT5 is not compatible with DOT3, DOT4 and DOT5.1.

TIGHTENING TORQUES : BRAKING SYSTEM

1. Front brake

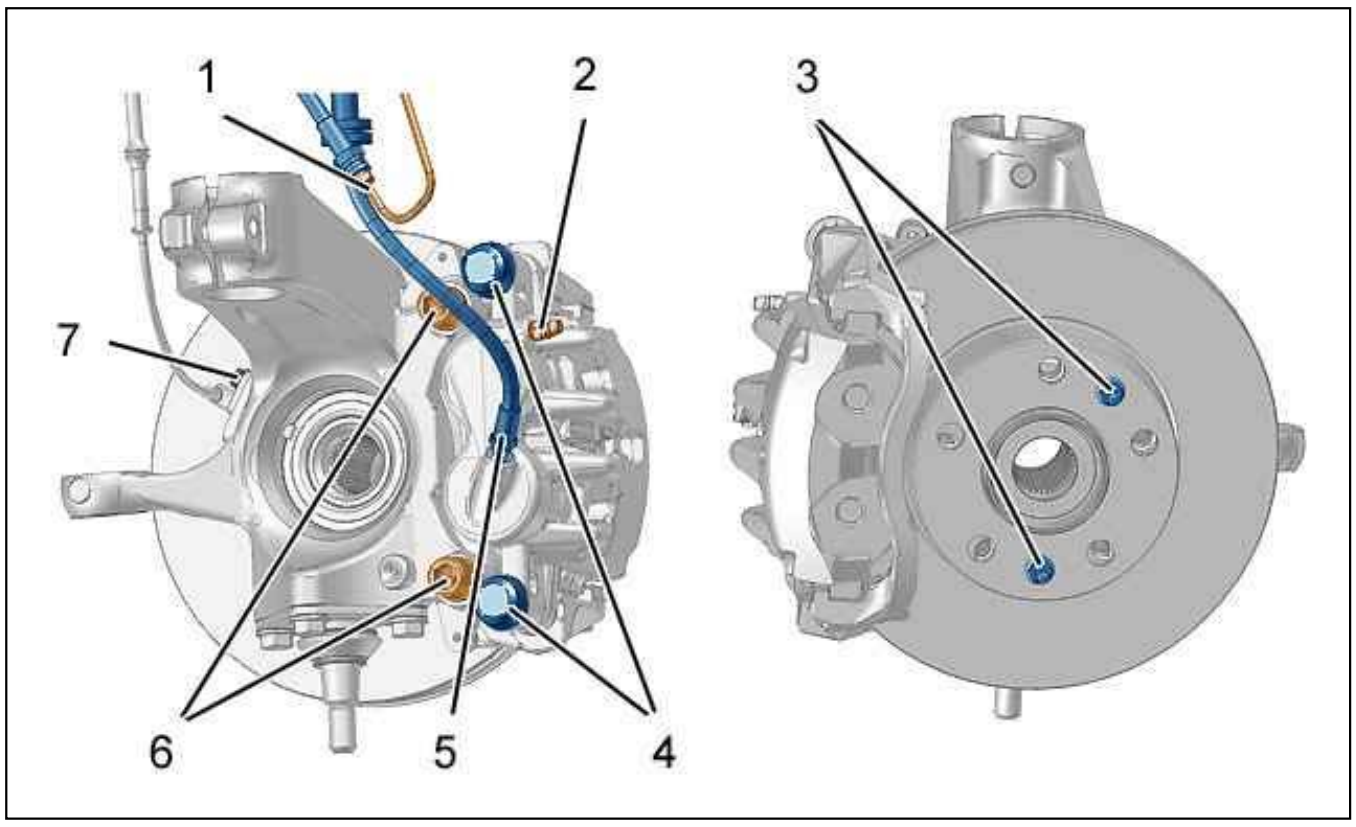

Figure : B3FP7N2D

Reference	Designation	Tightening torque
(1)	union - Brake pipe on hose	1,6 daNm
(2)	bleed screw(s)	1,8 daNm
(3)	bolts - Front brake disc	1,2 daNm
(4)	bolts - front brake caliper	3,4 daNm
(5)	union - Hose on caliper	1,6 daNm
(6)	bolts - Front brake caliper support	21 daNm
(7)	bolts - Front wheel sensor	0,8 daNm

2. Master cylinder + brake servo

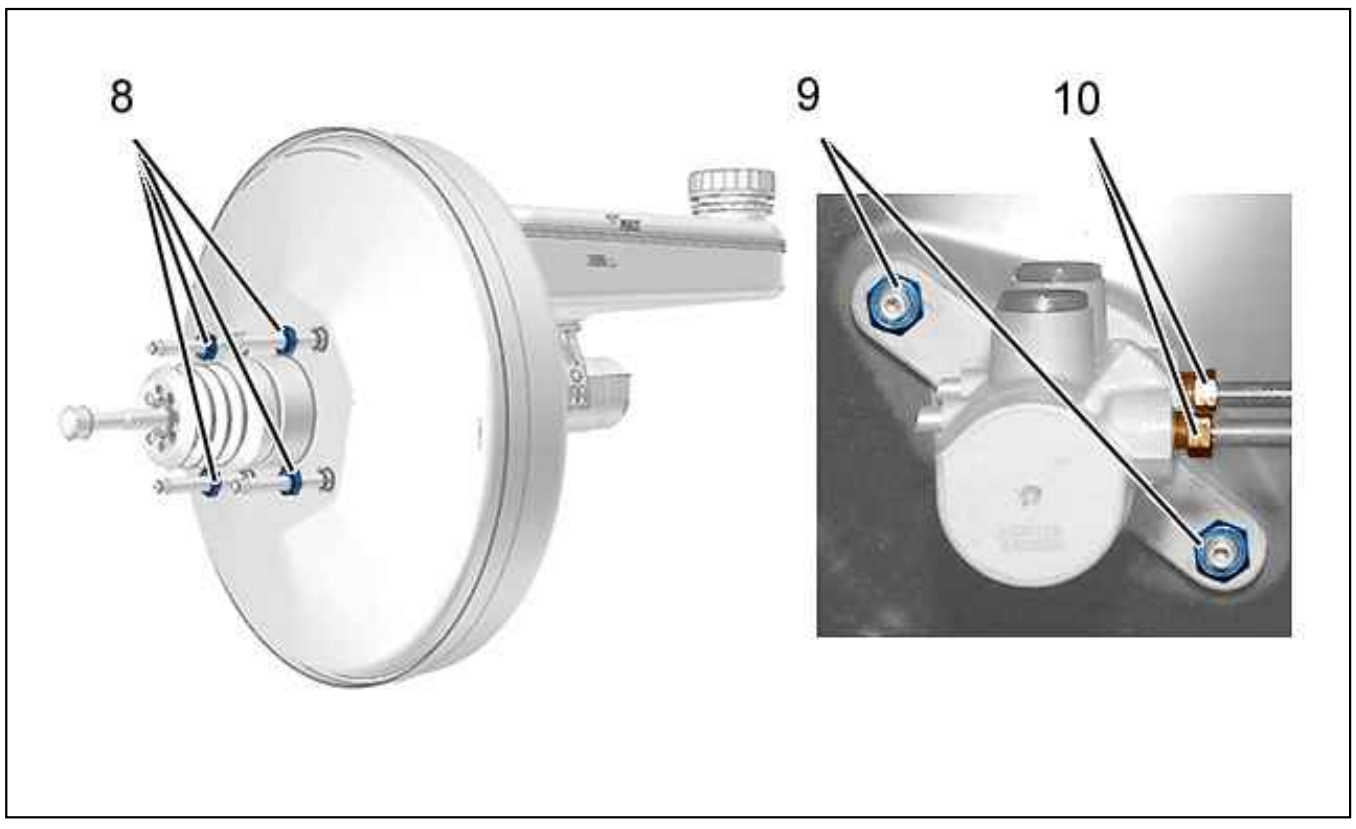

Figure : B3FP7N3D

Reference	Designation	Tightening torque
(8)	bolts - Brake servo on bulkhead	2,2 daNm
(9)	nuts - Master cylinder on brake servo	2 daNm
(10)	Connections	1,6 daNm

3. ABS/ESP hydraulic block

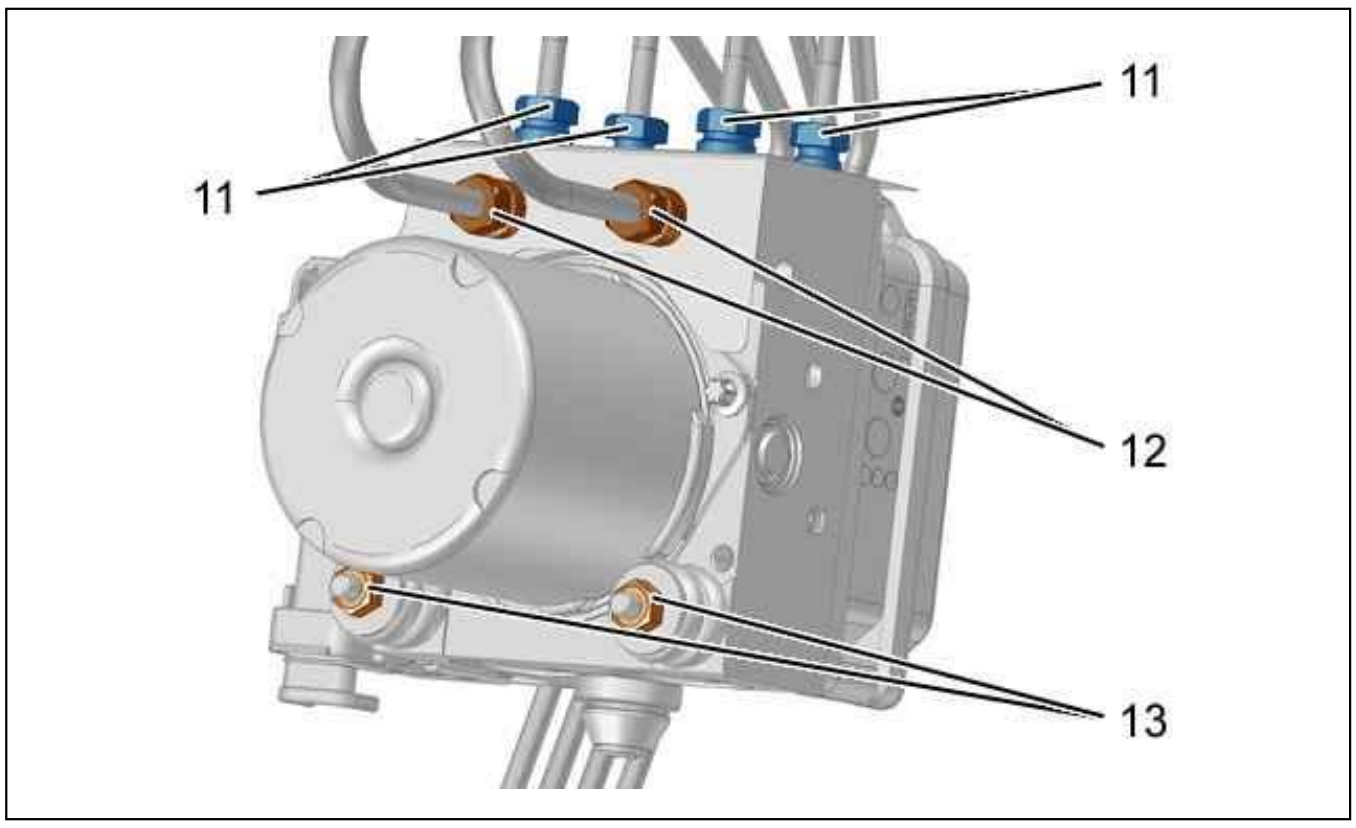

Figure : B3FP7N4D

Reference	Designation	Tightening torque
(11)	Connections	1,6 daNm
(12)	Connections	1,6 daNm
(13)	nuts - Hydraulic block on its support	0,8 daNm

4. Parking brake

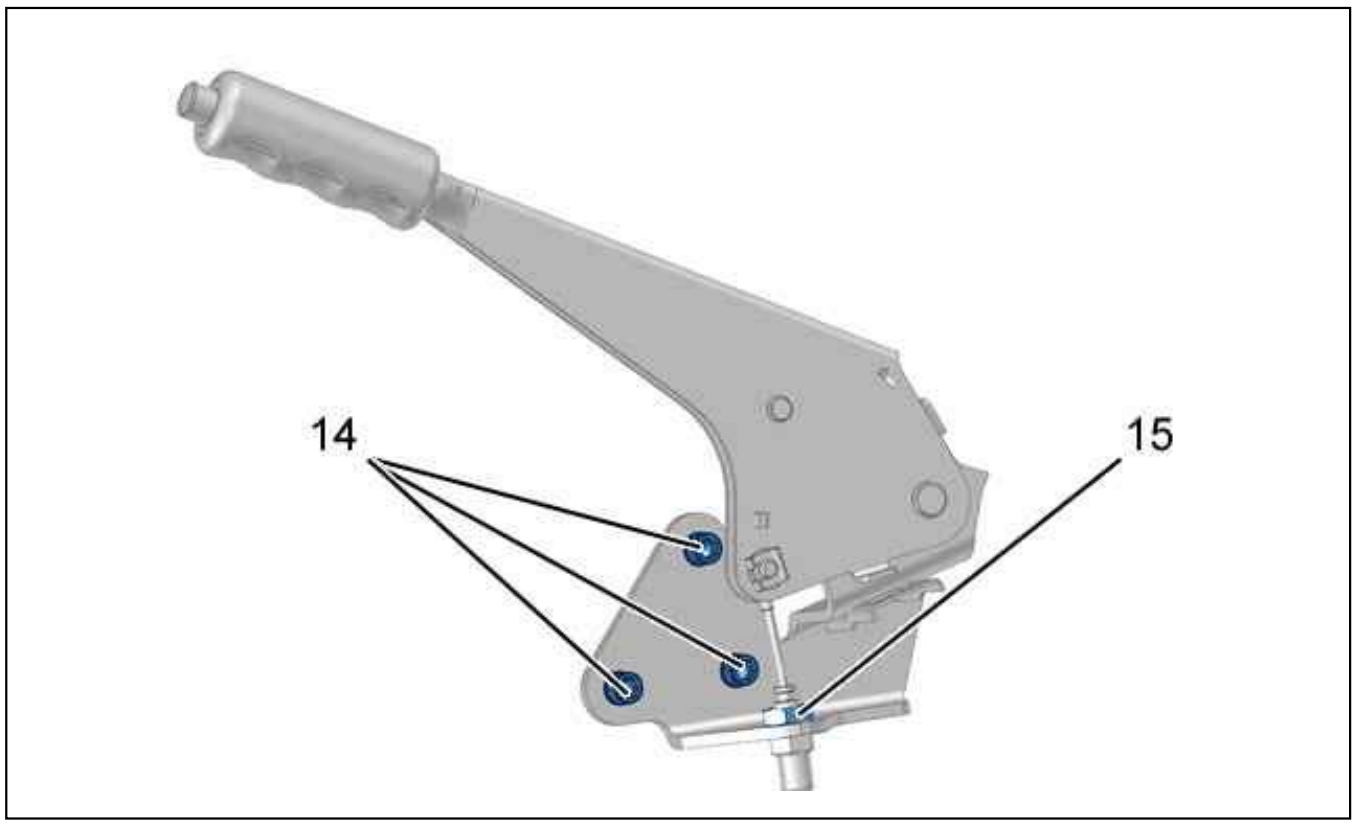

Figure : B3FP7N5D

Reference	Designation	Tightening torque
(14)	bolts - Handbrake lever	2 daNm
(15)	nut - Handbrake cable	3,5 daNm

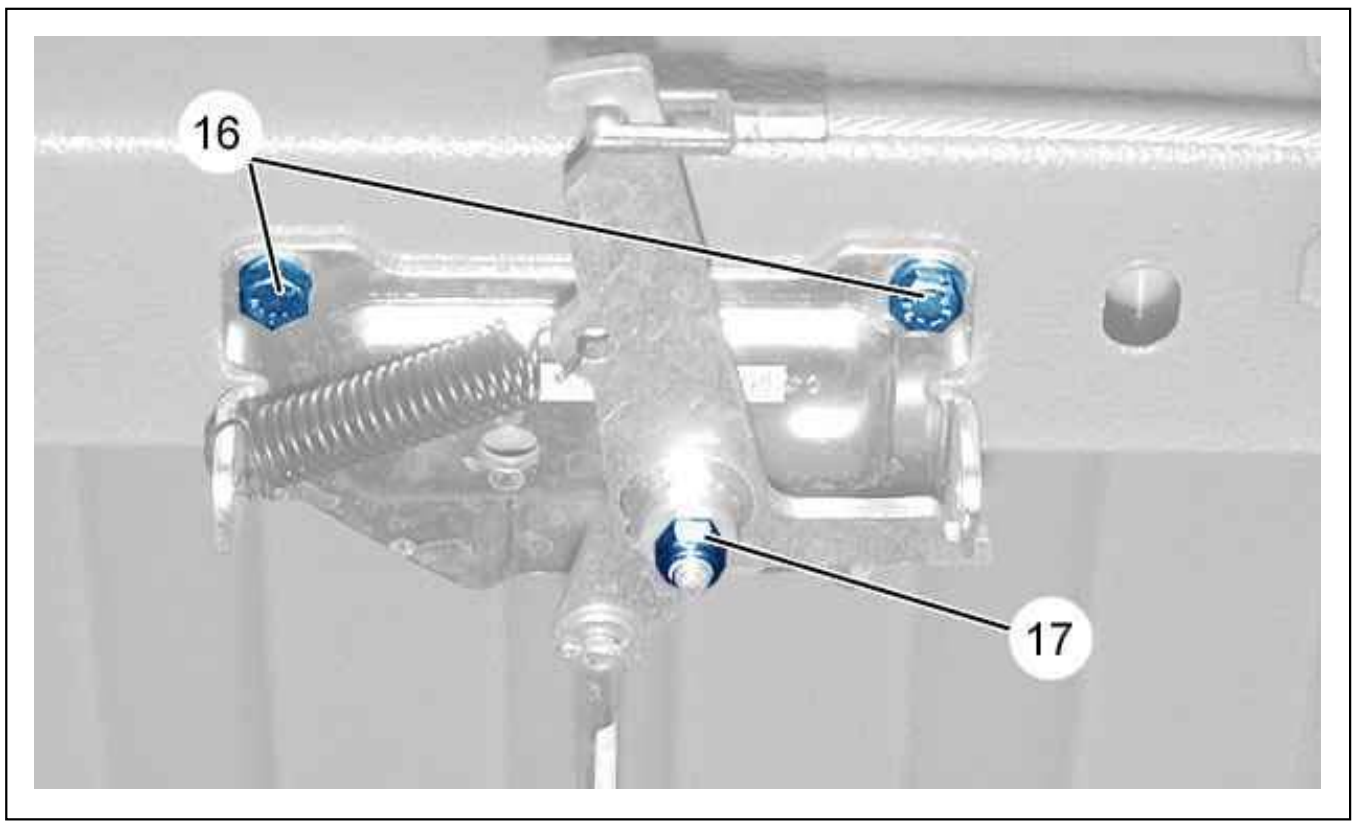

Figure : C5DP06YD

Reference	Designation	Tightening torque
(16)	bolts - Handbrake transfer plate	2 daNm
(17)	nut - Handbrake transfer lever	1,5 daNm

5. Rear brake

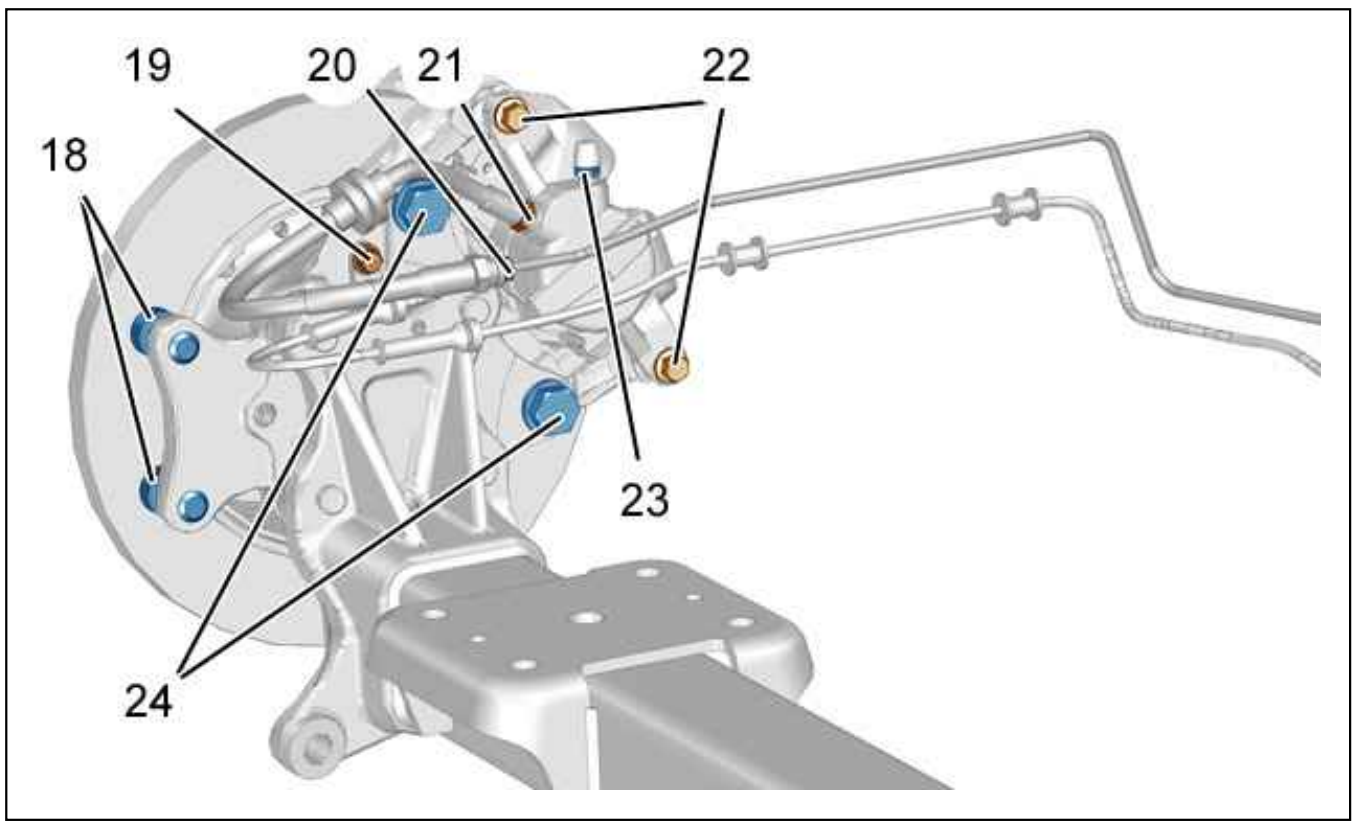

Figure : B3FP7N6D

Reference	Designation	Tightening torque
(18)	bolts - Handbrake shoes support	20 daNm
(19)	bolts - Rear wheel sensor	0,8 daNm
(20)	union - Brake pipe on hose	1,6 daNm
(21)	union - Hose on caliper	1,6 daNm
(22)	bolts - rear brake caliper	3 daNm
(23)	bleed screw(s)	1,8 daNm
(24)	bolts - Rear brake caliper yoke	16 daNm

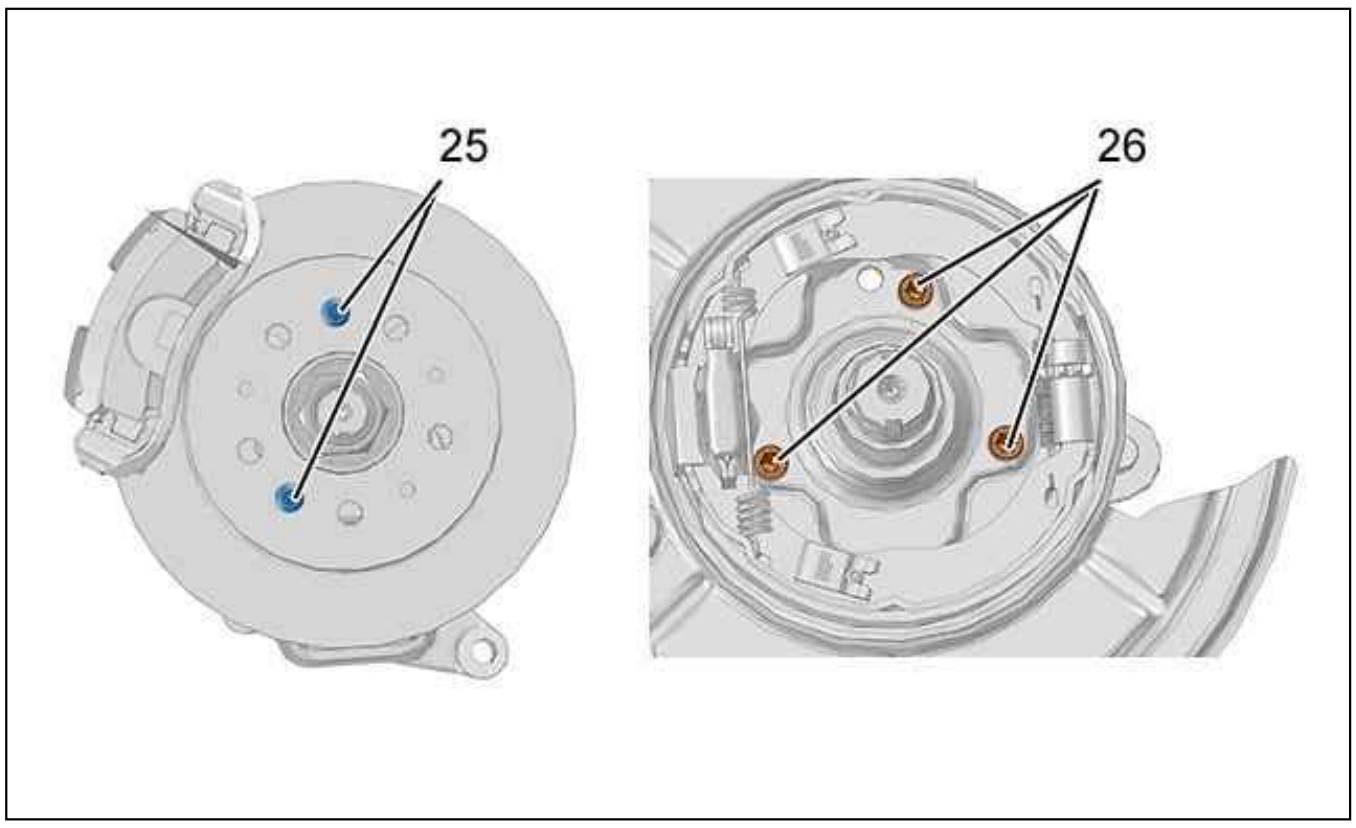

Figure : B3FP7N7D

Reference	Designation	Tightening torque
(25)	bolts - Rear brake disc	1,2 daNm
(26)	Handbrake on rear stub axle fixing	2,5 daNm

6. Gyrometer/accelerometer sensor

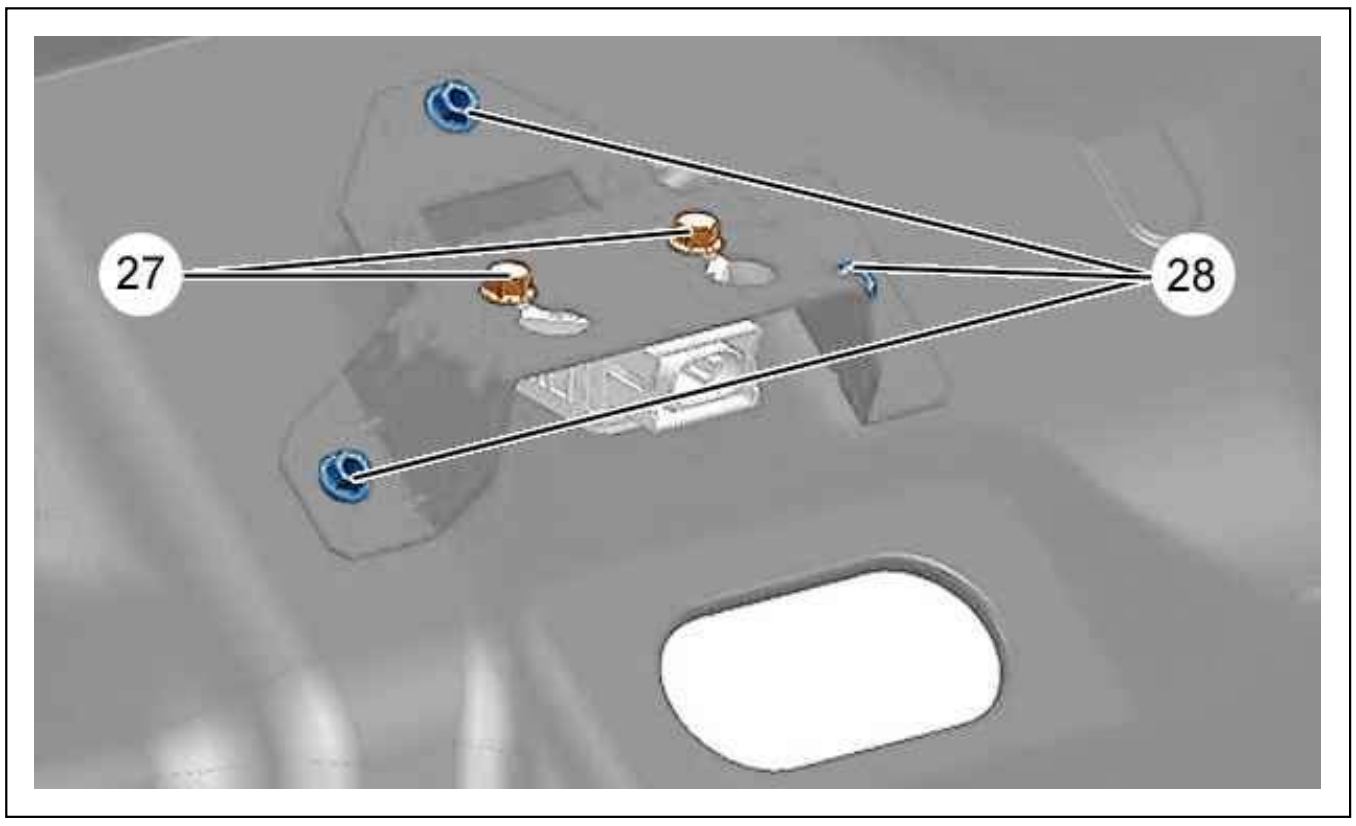

Figure : C5DP06ZD

Reference	Designation	Tightening torque
(27)	Accelerometer gyrometer sensor on support	0,6 daNm
(28)	Sensor support on body	0,6 daNm

7. Vacuum pump

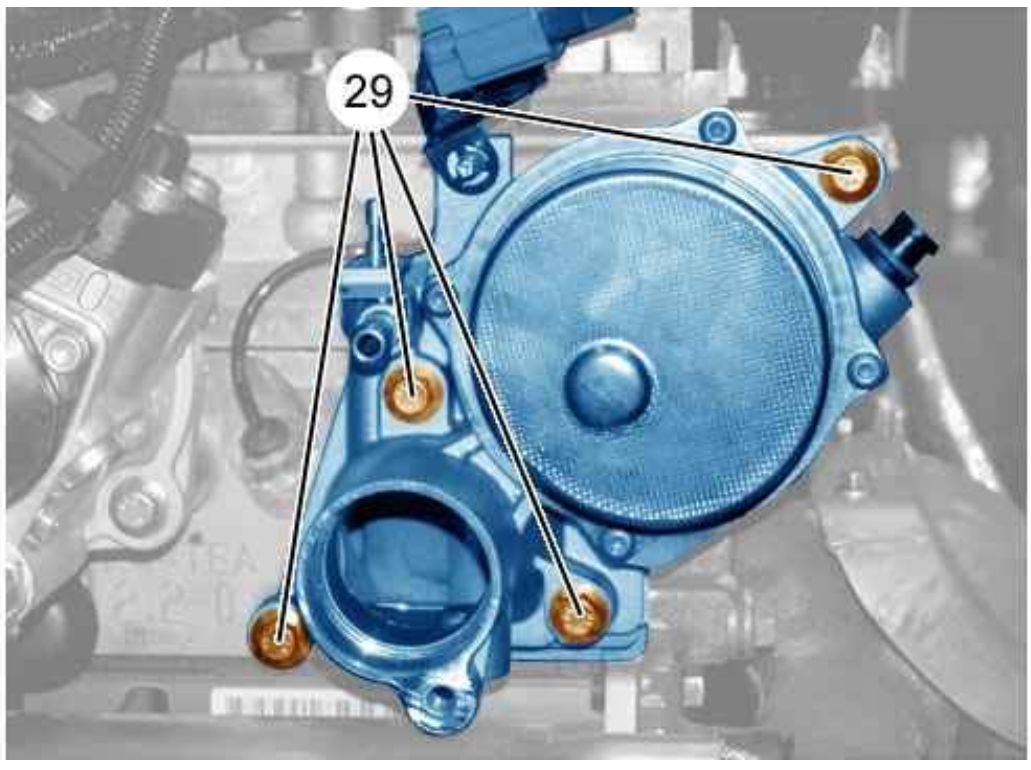

Figure : B3FB05YD

Reference	Designation	Tightening torque
(29)	Vacuum pump	2,2 daNm

GENERAL SPECIFICATIONS : BRAKING SYSTEM

1. Main braking circuit

1.1. all versions

Diagonally split braking circuit with ABS and EBA.
Disc brakes at the front and at the rear :

- The front brake discs are ventilated
- The rear brake discs are non-ventilated

The principal brake compensator and limiter functions are provided by the ABS brake force distribution system.
Key :

- ABS : Anti-lock brakes
- REF : Electronic braking distribution
- AFU (EBA) : Emergency Braking Assistance

The front brake pads are fitted with a wear indicator on the inner left pad .

1.2. Depending on the versions

Braking system with ABS and ASR.
Braking system with ESP, ASR and hill start assistance.
Key :

- ESP : Dynamic stability control
- Traction control : Traction control

Hill start assistance function : Assists the driver on moving off in forward gear or reverse when the vehicle is on a gradient of more than 2 %.
The hill start assistance is activated automatically when the brake pedal is pressed and the following conditions are met :

- The vehicle is stationary
- The gradient is more than 2 %
- The clutch pedal is pressed

1.3. Front brake specification

-	Gross vehicle weight: GVW	3000 kg / 3300 kg	3500 kg (Light)	3500 kg (Heavy)	4000 kg
Front brake discs	Type	Ventilated brake discs			
	Diametre (mm)	280	280	300	300
	Thickness (mm)	24	28	24	32
	Minimum thickness (mm)	21,9	25,9	21,9	29,9
Front brake calipers	make	BREMBO			
	Piston diameter (mm)	44 / 48	46 / 52	46 / 52	46 / 52
Brake linings	make	BREMBO			
	Material	GALFER 7201 / FERODO 4469			

1.4. Rear brake specification

-	Gross vehicle weight: GVW	3000 kg / 3300 kg	3500 kg (Light)	3500 kg (Heavy)	4000 kg
Rear brake discs	Type	Non-ventilated brake discs			
	Diametre (mm)	280	280	280	300
	Thickness (mm)	16			
	Minimum thickness (mm)	14,2			
Rear brake calipers	make	BOSCH			
	Piston diameter (mm)	48			
Brake linings	make	BOSCH			
	Material	GALFER 3409 / FERODO 4479			

1.5. Brake fluid reservoir

The brake fluid reservoir supplies the braking circuit and the clutch circuit .
Brake fluid quality : DOT 4.
Capacity of the brake circuit : 0,6 litre.

1.6. Master cylinder

Gross vehicle weight: GVW	3000 kg / 3300 kg	3500 kg (Light)	3500 kg (Heavy)	4000 kg
Diameter (In mm)	25,4	27	27	27

N.B. : The diameter is indicated underneath the master cylinder .

1.7. Brake servo

Gross vehicle weight: GVW	3000 kg / 3300 kg	3500 kg (Light)	3500 kg (Heavy)	4000 kg
make	BOSCH			
Diameter (inches)	11			

1.8. ABS or ESP hydraulic braking block

ABS hydraulic block as standard or ESP (According to versions).

make	Type	Remarks

BOSCH	ABS REF 8.0	Located on the front LH chassis member : 12 electrovalves - 4 regulation channels
	ESP 8.0	

N.B. : The HHC (Hill Holder Control) function is incorporated in the ESP ECU.

2. Parking brake

The handbrake is incorporated in the rear discs .

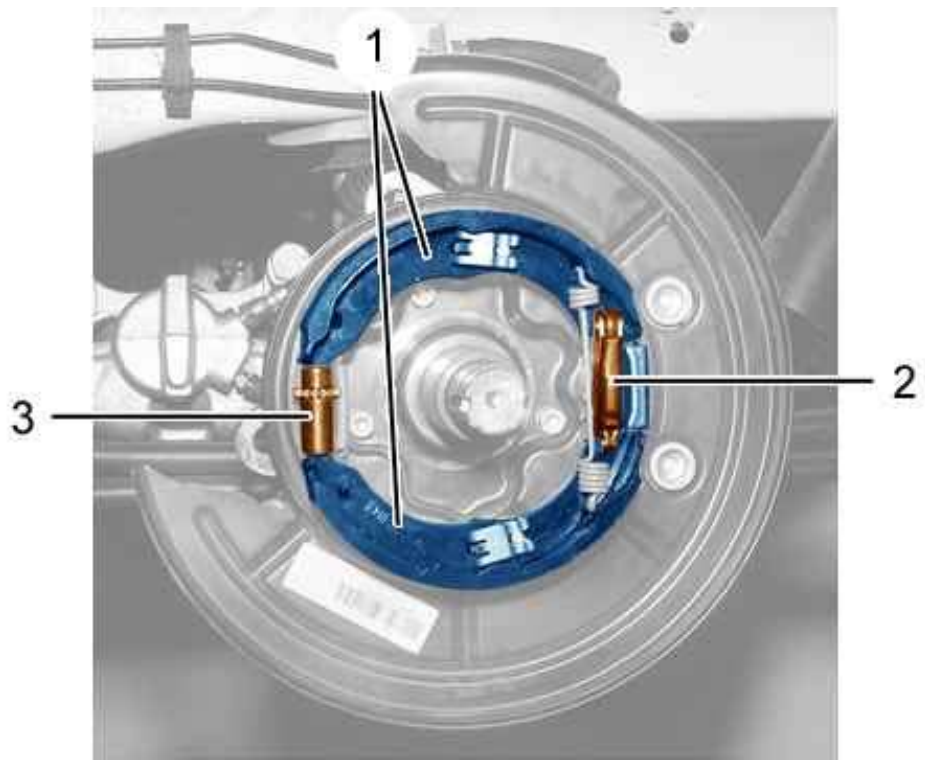

Figure : B3FP7NTD

(1) Brake linings.
(2) Control lever .
(3) Pads adjustment screw .

CHECKING AND ADJUSTING VALUES : BRAKING SYSTEM

1. Front brakes

-	Gross vehicle weight: GVW	3000 kg / 3300 kg	3500 kg (Light)	3500 kg (Heavy)	4000 kg
Front brake discs	Type	Ventilated brake discs			
	Diametre (mm)	280	280	300	300
	Thickness (mm)	24	28	24	32
	Minimum thickness (mm)	21,9	25,9	21,9	29,9
Front brake calipers	make	BREMBO			
	Piston diameter (mm)	44 / 48	46 / 52	46 / 52	46 / 52
Brake linings	make	BREMBO			
	Material	GALFER 7201 / FERODO 4469			

2. Rear brakes

-	Gross vehicle weight: GVW	3000 kg / 3300 kg	3500 kg (Light)	3500 kg (Heavy)	4000 kg
Rear brake discs	Type	Non-ventilated brake discs			
	Diametre (mm)	280	280	280	300
	Thickness (mm)	16			
	Minimum thickness (mm)	14,2			
Rear brake calipers	make	BOSCH			
	Piston diameter (mm)	48			
Brake linings	make	BOSCH			
	Material	GALFER 3409 / FERODO 4479			

3. Vacuum pump pressure

Engine oil temperature	Engine speed (rpm)	Minimum vacuum (mbars)	Maximum time (in seconds) required to reach the minimum vacuum
80°C ± 5°C	800	500	3
	800	700	9
	800	800	14
	4000	500	1,5
	4000	700	2,5
	4000	800	4

CHECKING : BRAKING SYSTEM (TECHNICAL NOTE)

ESSENTIAL : Observe the safety and cleanliness recommendations .

1. Foreword

This document describes a brake wear checking method, it can be printed, as can the associated methods, at the request of the customer.

2. Tooling

CAUTION : The kit [0805] is not available from replacement parts. As a replacement, a dial gauge magnetic support can be used which will guarantee the measurements.

Equipment : Dial gauge magnetic support .

Tool	Reference	Designation
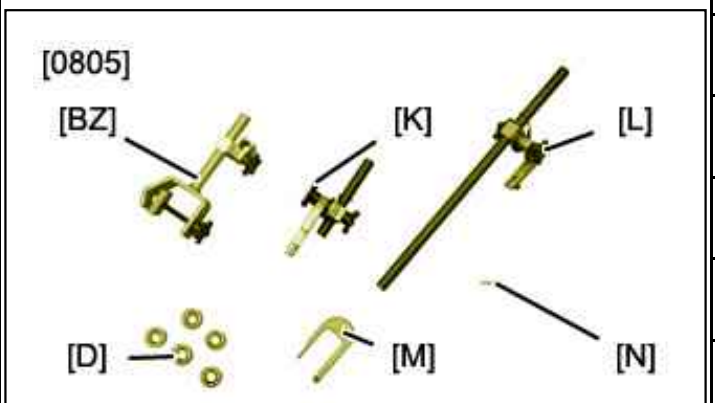 Figure : E5AB1CCT	[0805]	Disc/hub run-out checking tool
	[0805-BZ]	caliper
	[0805-K]	Disc check bracket + Ventilated disc fork
	[0805-L]	Disc check bracket
	[0805-D]	Non-ventilated disc fork
	[0805-M]	Spacer
	[0805-N]	dial gauge extension
 Figure : E5AB1CDT	[2437-T]	Dial gauge
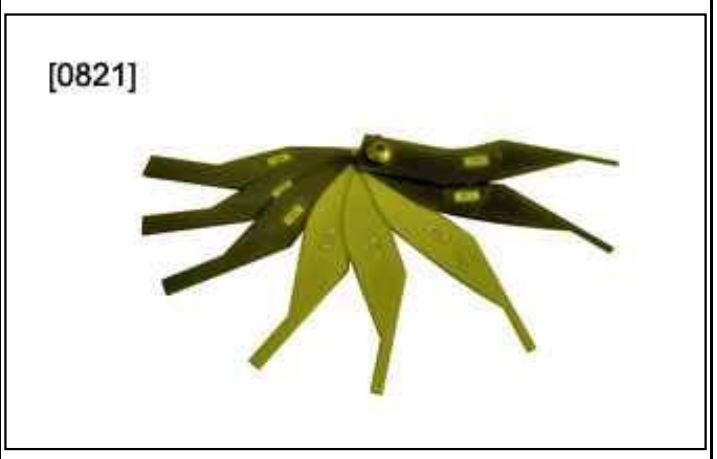 Figure : E5AB1JZT	[0821]	Set of shims

3. Front brake disc

Check the tightening torques of the wheels.
Raise and support the vehicle on a 2 -post lift.

3.1. Checking the brake disc run-out (wheel fitted) (First possibility)

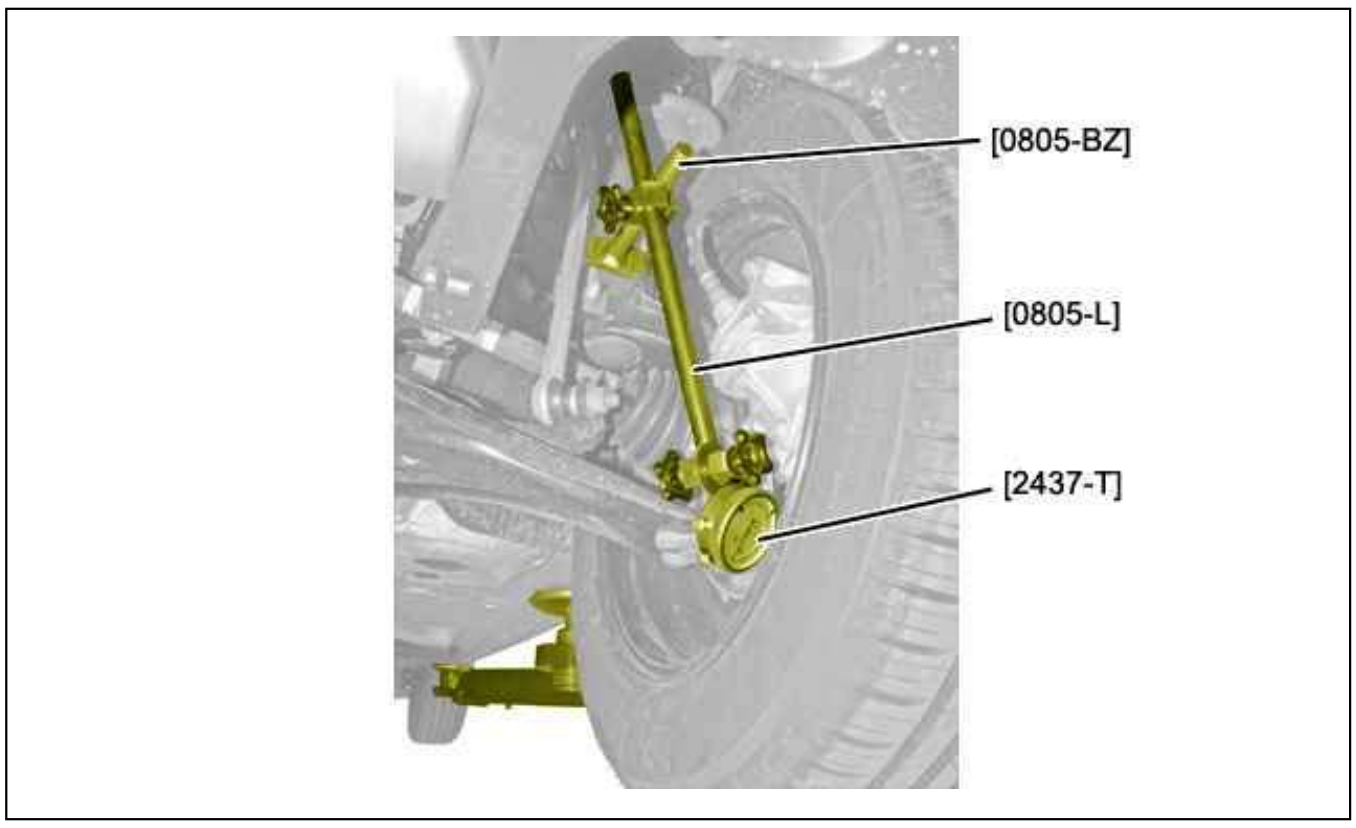

Figure : B3FD05CD

Fix :

- The assembly [0805-BZ], [0805-L] on the damper
- The dial gauge [2437-T] on the tool [0805-L]

Place the tip of the dial gauge [2437-T] in contact 10 mm from the periphery of the brake disc (the tip under the action of the spring).

CAUTION : To check the front brake disc run-out, turn the disc by means of the driveshaft.

Carry out :

- A dial gauge zero reset
- A full turn of the brake disc

Permissible brake disc assembly run-out on the hub : Less than 0,05 mm.

3.2. Checking the brake disc run-out (wheel fitted) (Second possibility)

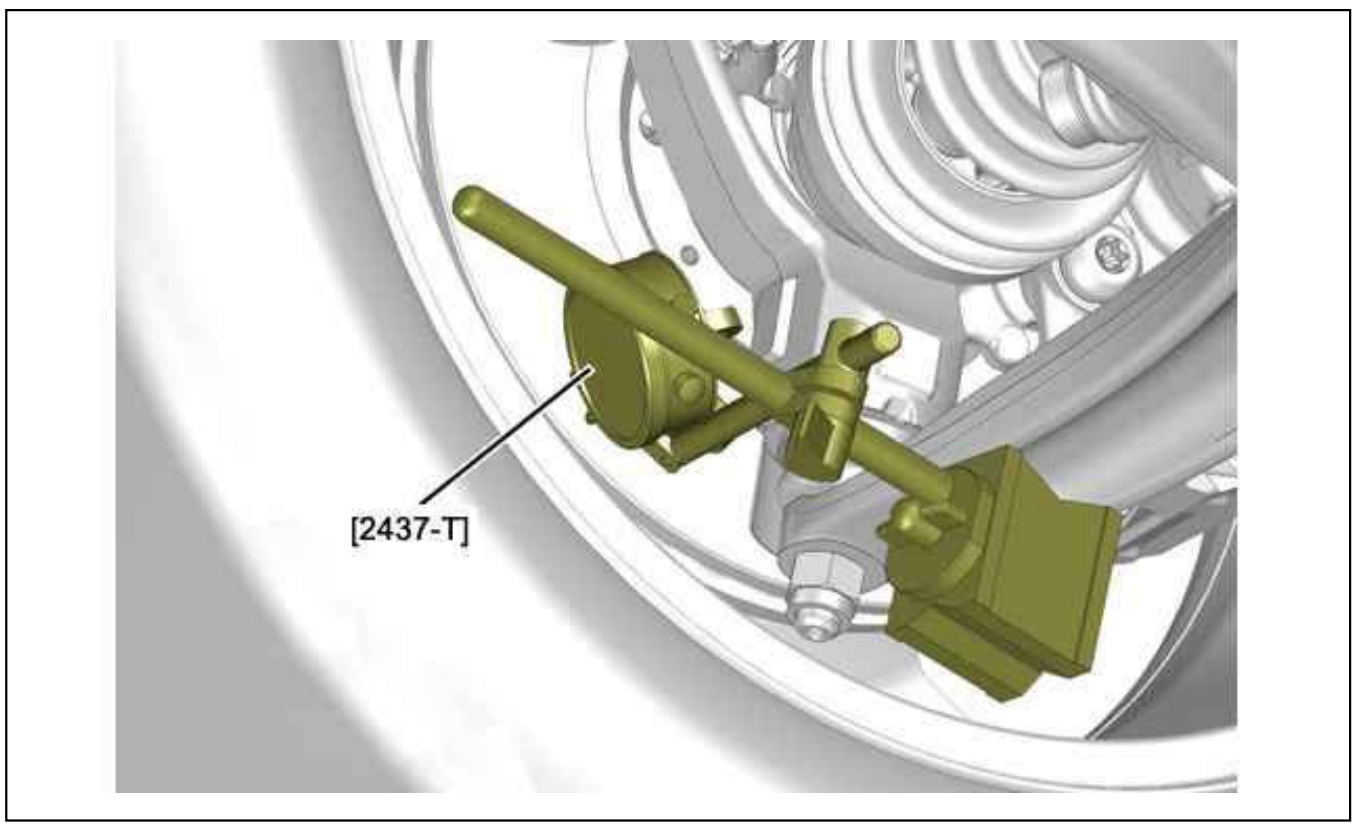

Figure : B3FD05DD

Fix the magnetic support on the lower suspension arm.
Fix the dial gauge [2437-T] on the magnetic support .
Place the tip of the dial gauge [2437-T] in contact 10 mm from the periphery of the brake disc (the tip under the action of the spring).

CAUTION : To check the front brake disc run-out, turn the disc by means of the driveshaft.

Carry out :

- A dial gauge zero reset
- A full turn of the brake disc

Permissible brake disc assembly run-out on the hub : Less than 0,05 mm.

3.3. Checking the variation in the thickness of the brake disc (Wheel removed) (First possibility)

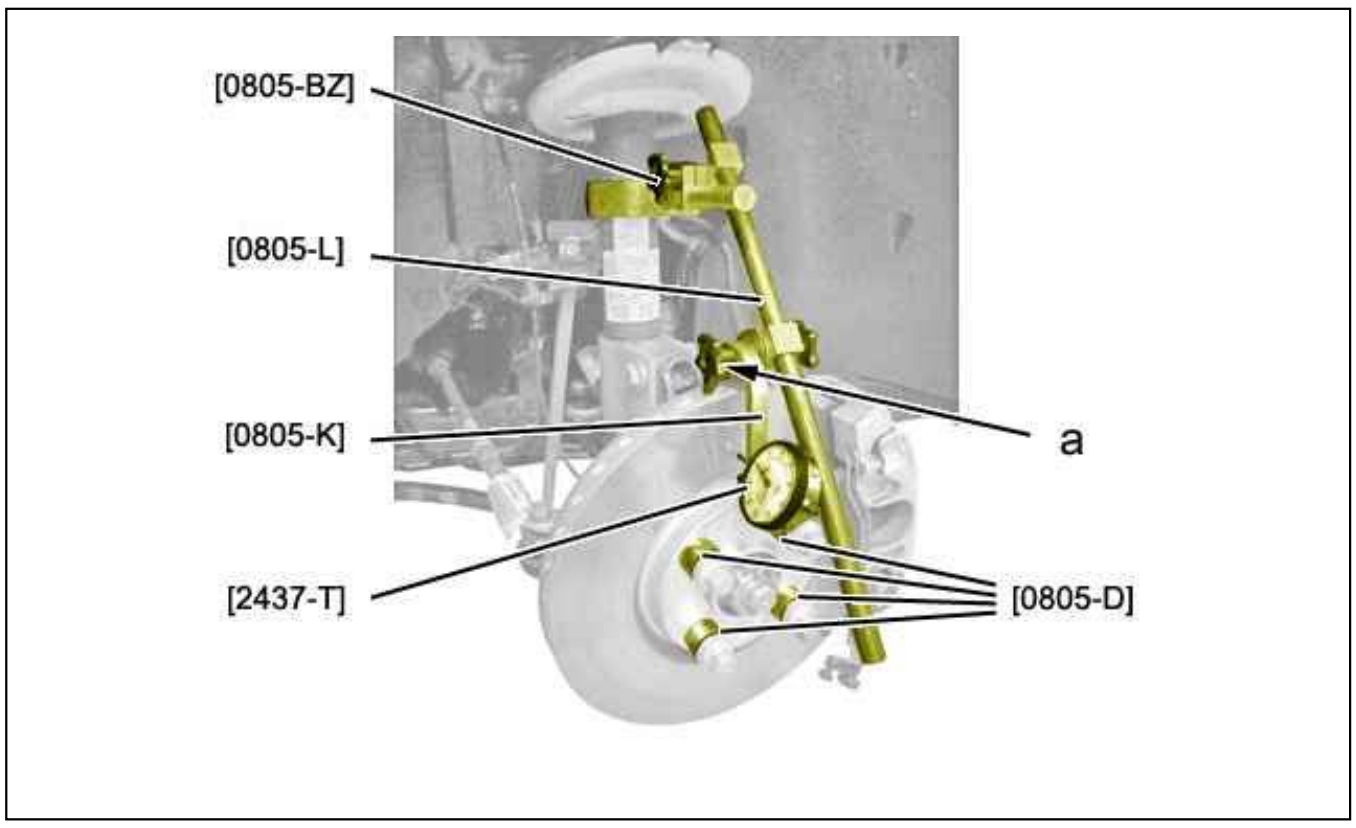

Figure : B3FD05ED

Refit and tighten the wheel bolts fitted with the tool [0805-D].
Fix :

- The assembly [0805-BZ], [0805-L] on the damper
- The dial gauge [2437-T] on the tool [0805-K]

Loosen the tool [0805-K] (at "a").
Place the tip of the dial gauge [2437-T] in contact 5 mm from the periphery of the brake disc (the tip under the action of the spring).

CAUTION : To check the variation in the thickness of the front brake disc, turn the brake disc by means of the driveshaft.

Carry out :

- A dial gauge zero reset
- A full turn of the brake disc

Permissible variation in the thickness of the brake disc over the same circumference 0,01 mm.

3.4. Checking the variation in the thickness of the brake disc (Wheel removed) (Second possibility)

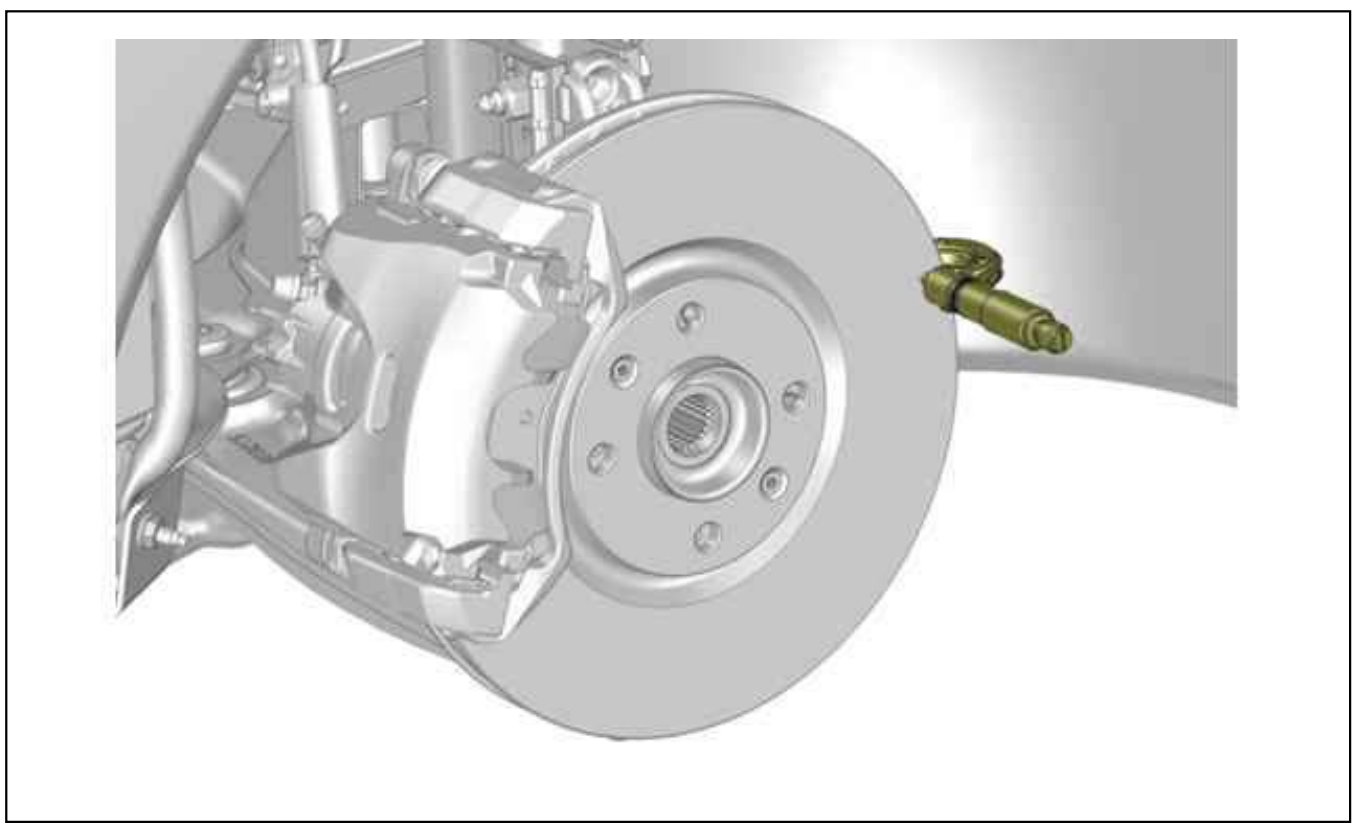

Figure : B3FD05FD

Check the variation in the thickness over the circumference of the brake disc at eight points 5 mm from the periphery of the brake disc ; Using a micrometer (Capacity: 0 - 50 mm).
Permissible variation in the thickness of the brake disc over the same circumference 0,01 mm.

3.5. Checking the thickness of the front brake disc (wheel removed)

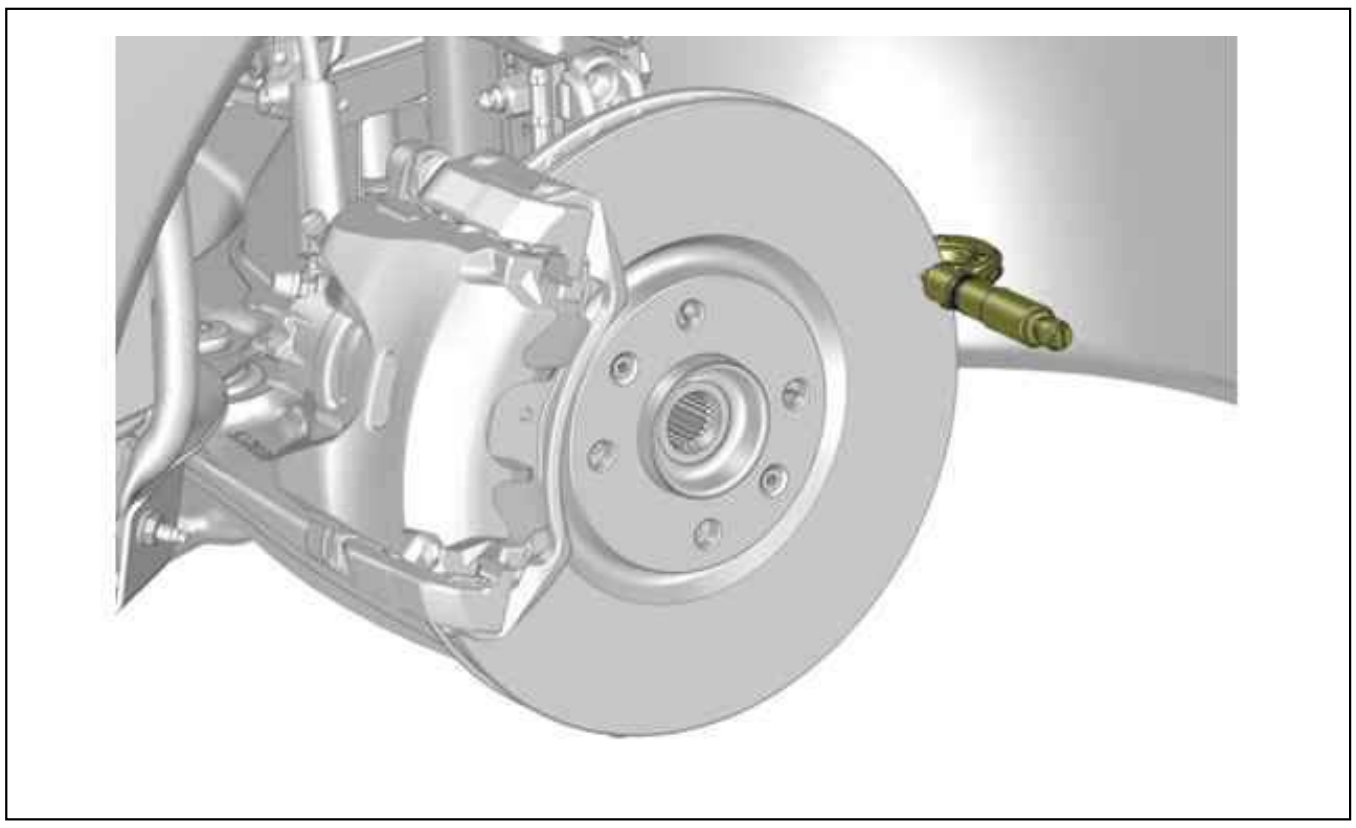

Figure : B3FD05FD

Measure the thickness of the brake discs on the friction surfaces ; Using a micrometer (Capacity: 0 - 50 mm). See the table below.

Front discs			
Special feature	Nominal diameter of a new disc	Thickness of a new disc	Minimum permitted thickness
Solid disc	247 mm	10 mm	8 mm
	247 mm	13 mm	11 mm
	266 mm	13 mm	11 mm
Ventilated disc	247 mm	20,4 mm	18,4 mm
	257 mm	20,4 mm	18,4 mm
	257 mm	22 mm	20 mm
Ventilated disc (C-Zero)	257 mm	17 mm	15,4 mm
Ventilated disc	266 mm	20,4 mm	18,4 mm
	266 mm	22 mm	20 mm
	280 mm	24 mm	22 mm
	280 mm	28 mm	26 mm
	281 mm	26 mm	24 mm
	283 mm	26 mm	24 mm
	284 mm	22 mm	20,2 mm
	285 mm	28 mm	26 mm
	288 mm	28 mm	26 mm
	294 mm	24 mm	22,4 mm
	294 mm	26 mm	24,4 mm
	300 mm	24 mm	22 mm
	300 mm	32 mm	30 mm
	302 mm	26 mm	24 mm
	304 mm	28 mm	26 mm
	309 mm	32 mm	30 mm
	310 mm	32 mm	30 mm
	330 mm	30 mm	28 mm
	340 mm	30 mm	28 mm

4. Front hub

4.1. Checking the run-out : First possibility

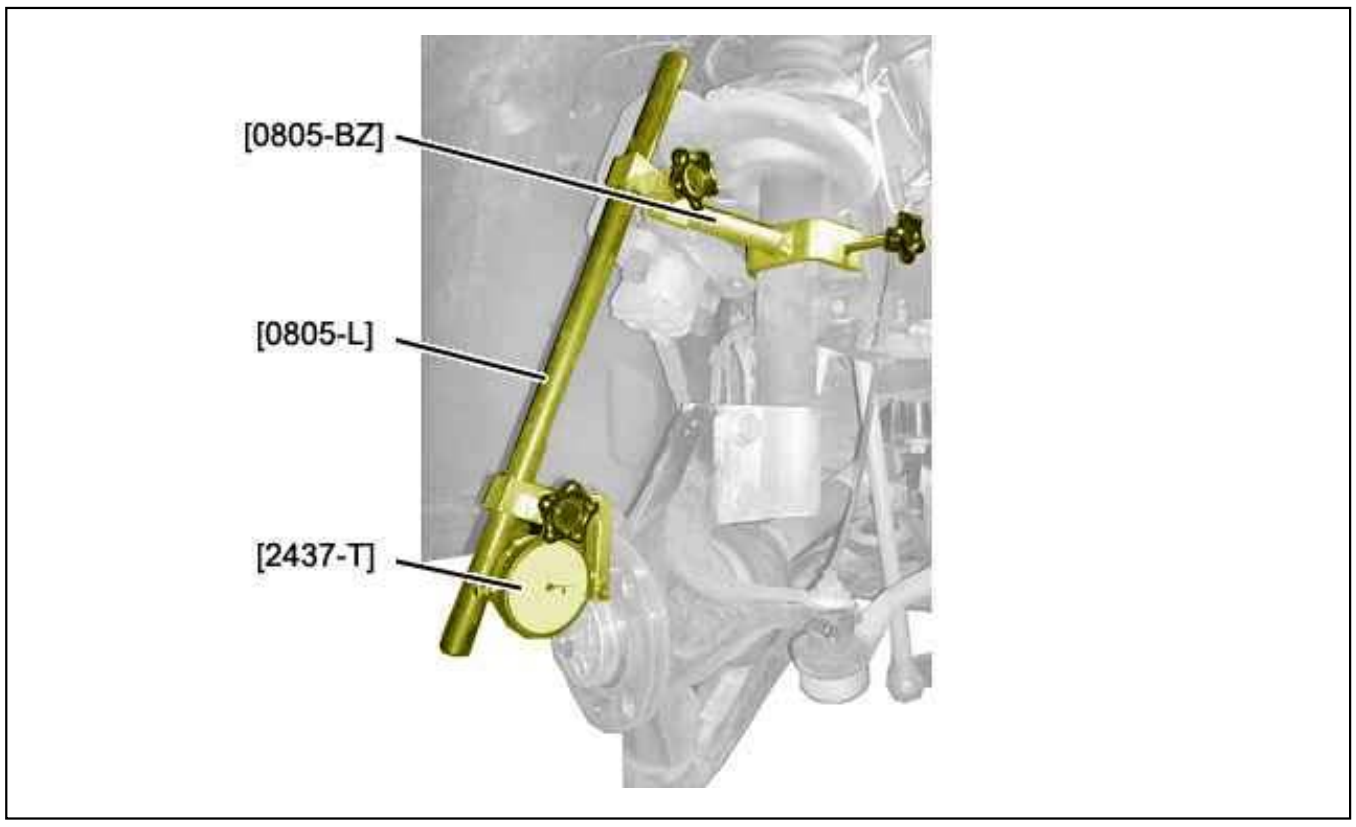

Figure : B3FD05ID

Check the tightening torque of the driveshaft nut.
Use an abrasive cloth to clean the contact surface of the brake hub/disc.
Fix :

- The assembly [0805-BZ], [0805-L] on the damper
- The dial gauge [2437-T] on the tool [0805-L]

Place the tip of the dial gauge [2437-T] in contact as close as possible to the outer edge of the front hub (the tip under the action of the spring).

CAUTION : To check the run-out of the front hub, turn the hub by means of the driveshaft.

Carry out :

- A dial gauge zero reset
- A complete revolution of the front hub

Permissible run-out of the front hub : Less than 0,013 mm.

4.2. Checking the run-out : Second possibility

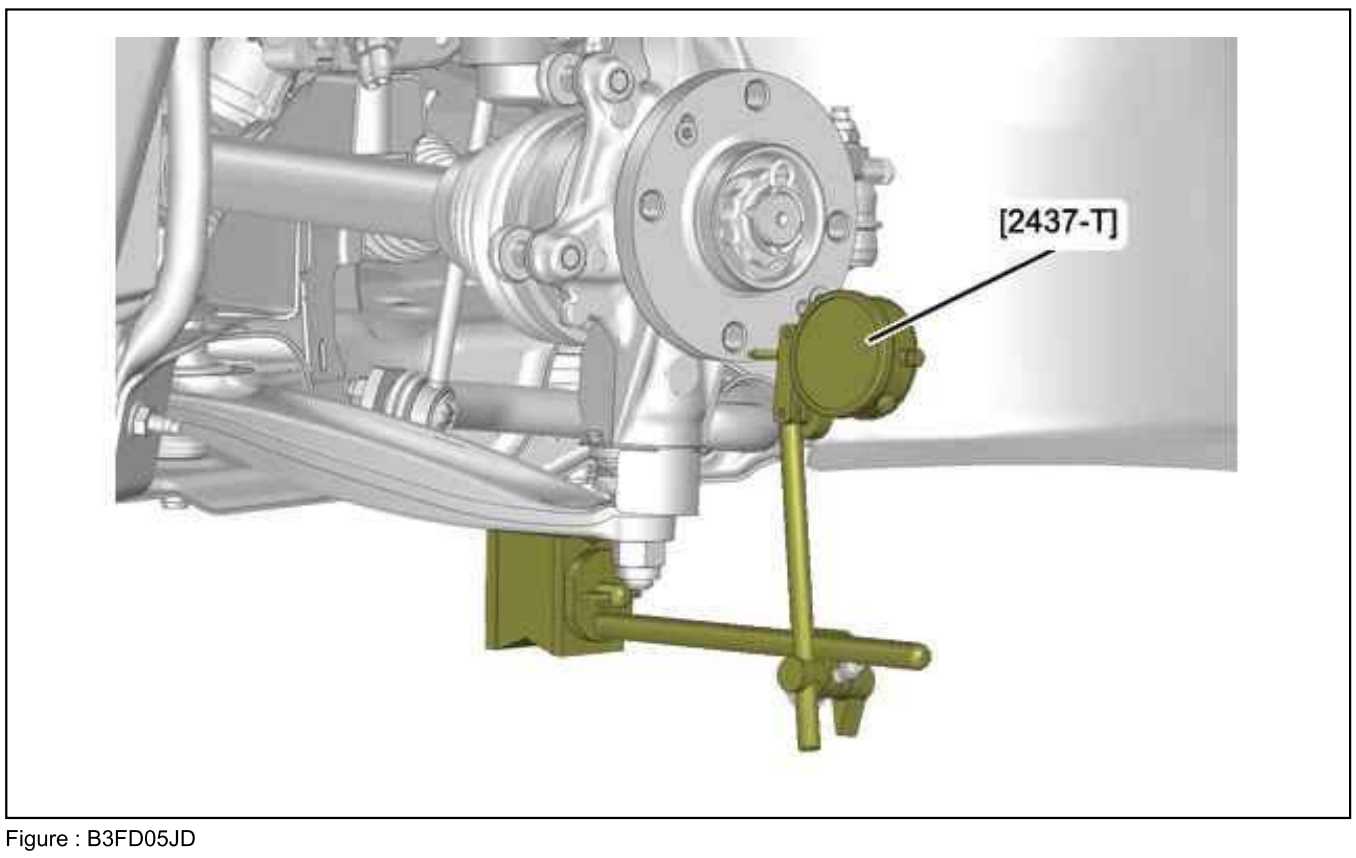

Figure : B3FD05JD

Fix :

- The magnetic support on the lower suspension arm
- The dial gauge [2437-T] on the magnetic support

Place the tip of the dial gauge [2437-T] in contact as close as possible to the outer edge of the front hub (the tip under the action of the spring).

CAUTION : To check the run-out of the front hub, turn the hub by means of the driveshaft.

Carry out :

- A dial gauge zero reset
- A complete revolution of the front hub

Permissible run-out of the front hub : Less than 0,013 mm.

5. Checking the thickness of the rear brake disc (wheel removed)

Slacken the parking brake .

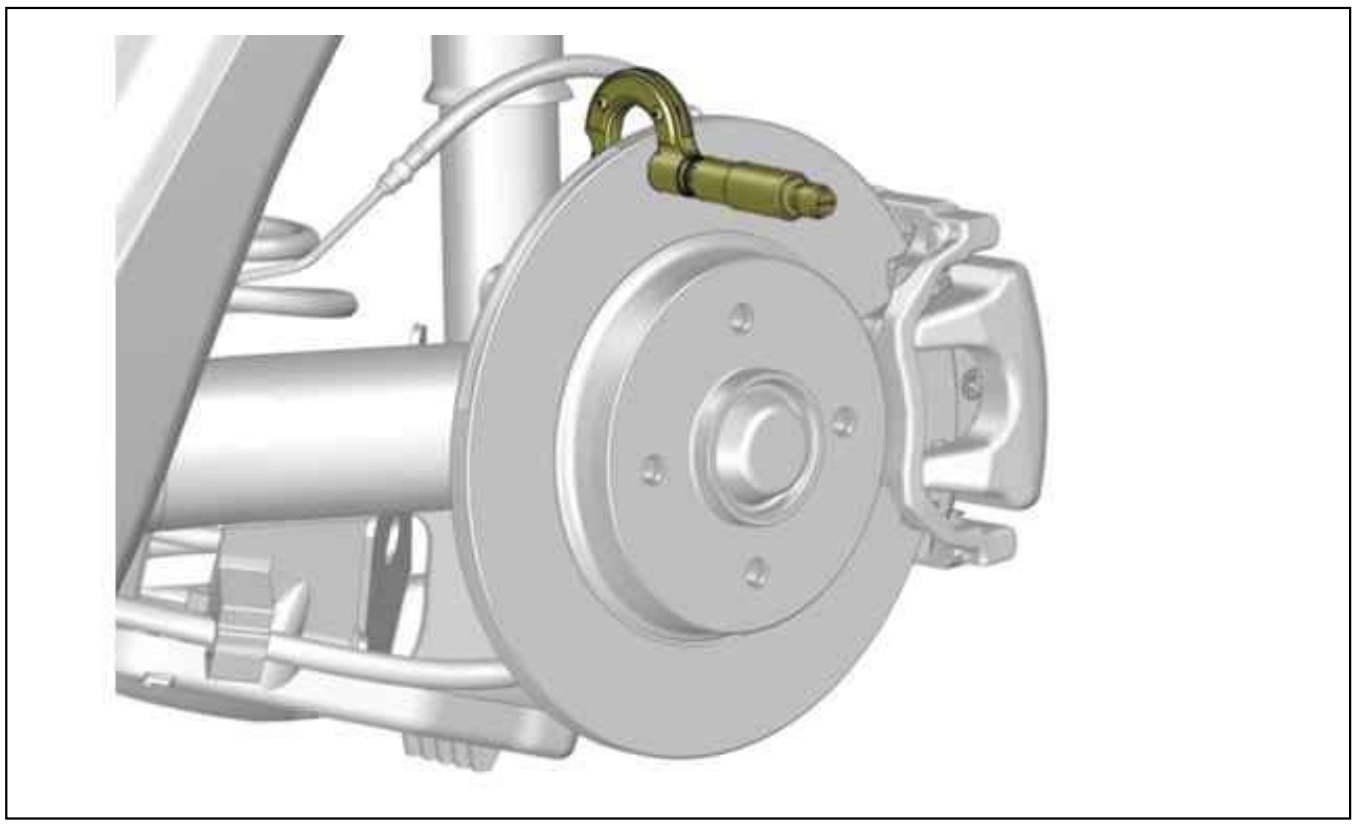

Figure : B3FD05KD

Measure the thickness of the brake discs on the friction surfaces ; Using a micrometer (Capacity: 0 - 50 mm).
See the table below.

Rear discs			
Special feature	Nominal diameter of a new disc	Thickness of a new disc	Minimum permitted thickness
Solid disc	247 mm	8 mm	6 mm
Solid disc hub	249 mm	9 mm	7 mm
	268 mm	12 mm	10 mm
Solid disc	272 mm	12 mm	10 mm
	274 mm	14 mm	12 mm
	280 mm	16 mm	14 mm
	290 mm	10 mm	8 mm
	290 mm	12 mm	10 mm
	290 mm	14 mm	12 mm
	300 mm	16 mm	14 mm
	302 mm	10 mm	8,4 mm
Ventilated disc	302 mm	22 mm	20 mm

6. Rear brake drum check

Slacken the parking brake .
Remove :

- The wheel
- The brake drum

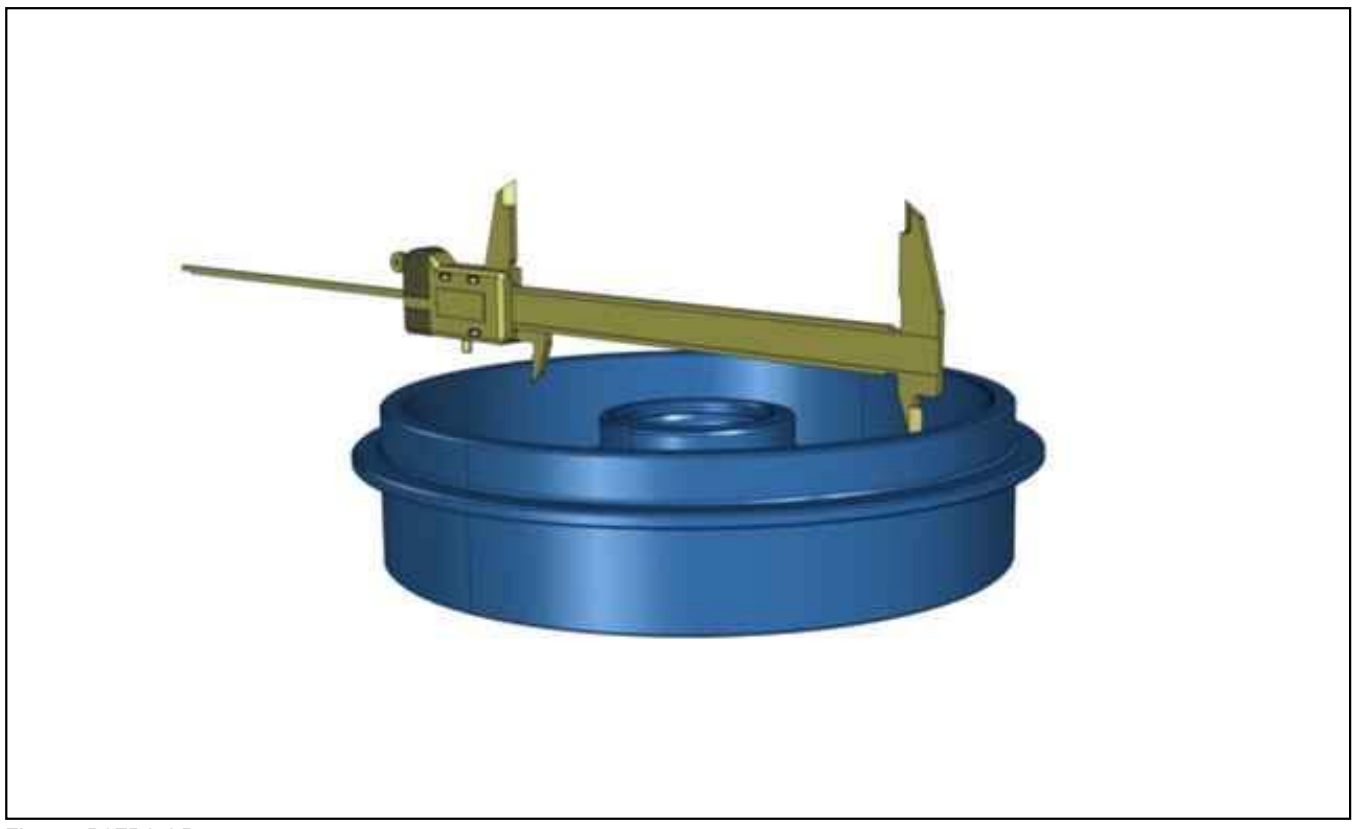

Figure : B3FD05LD

Measure the internal diameter of the brake drums on the friction surface ; Using sliding calipers .
See the table below.

Rear brake drum		
Drum	Nominal diameter of a new drum	Maximum permitted diameter
7’’	180 mm	182 mm

8''	203 mm	204,4 mm
8" (C-Zero)	203 mm	205 mm
9''	228,6 mm	229,8 mm
10''	254,15 mm	256 mm

Refit :

- The brake drum
- The wheel

7. Check of the thickness of the brake pad linings and brake shoe linings

Check the wear of the brake pads : Using tool [0821].

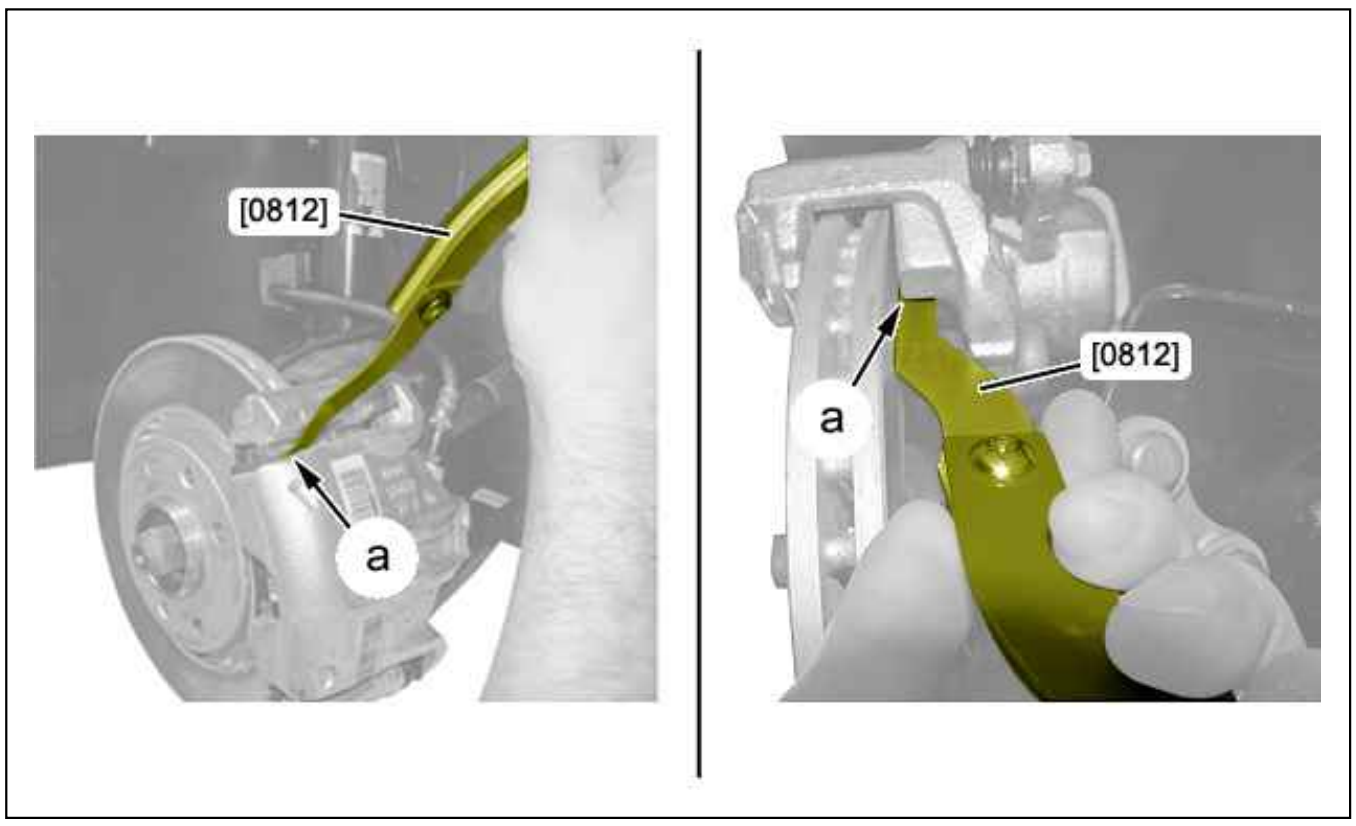

Figure : B3FD05UD

N.B. : Take several measurements at the points accessible using the tool [0821] (inside and outside) : For example at "a".

Vehicle	Minimum thickness of the brake pad linings (front)	Minimum thickness of the brake pad linings (rear)	Minimum thickness of the brake shoe linings
C-ZERO (S4)	2 mm	-	1 mm
C1 (B0)	1 mm	-	1 mm
C2 (A6)	2 mm	2 mm	1 mm
C3 (A8)			
C3 (A31)			
C3 Pluriel (A42)			
C3 (A51)			
DS3 (A55)			
C3 PICASSO (A58)	2 mm	2 mm	-
C-ELYSEE (M43)	2 mm	-	1 mm
C4 (B53)	2 mm	2 mm	-
C4 PICASSO (B58)			
C4 PICASSO B78			
C4 (B7) -DS4			
C QUATRE L Russia (B7R)			
CITROEN C5 (X3)	2 mm	2 mm	1 mm
CITROEN C5 (X4)			
CITROEN C5 (X7)	3 mm	3 mm	-
CITROEN C5 (XW)			
DS5 (B81)	2 mm	2 mm	-
C6 (X6)	2 mm	2 mm	-
C8(VV)	3 mm	2 mm	-
C4 Aircross (J4)	2 mm	2 mm	1 mm
C-Crosser (I4)	2 mm	2 mm	1 mm
NEMO (MCV)	2 mm	2 mm	1 mm
BERLINGO (M49)	2 mm	-	1 mm
BERLINGO (M59)	2 mm	-	1 mm
BERLINGO (B9)	2 mm	2 mm	1 mm
DISPATCH - SYNERGIE (U6)			
JUMPY 3 (G9)			
JUMPER 2 (U5)	2 mm	2 mm	1 mm
JUMPER 3 (U9)	2 mm	2 mm	1 mm

CHECK : REAR BRAKE DISCS

ESSENTIAL : Observe the safety and cleanliness recommendations.

1. Recommended tools

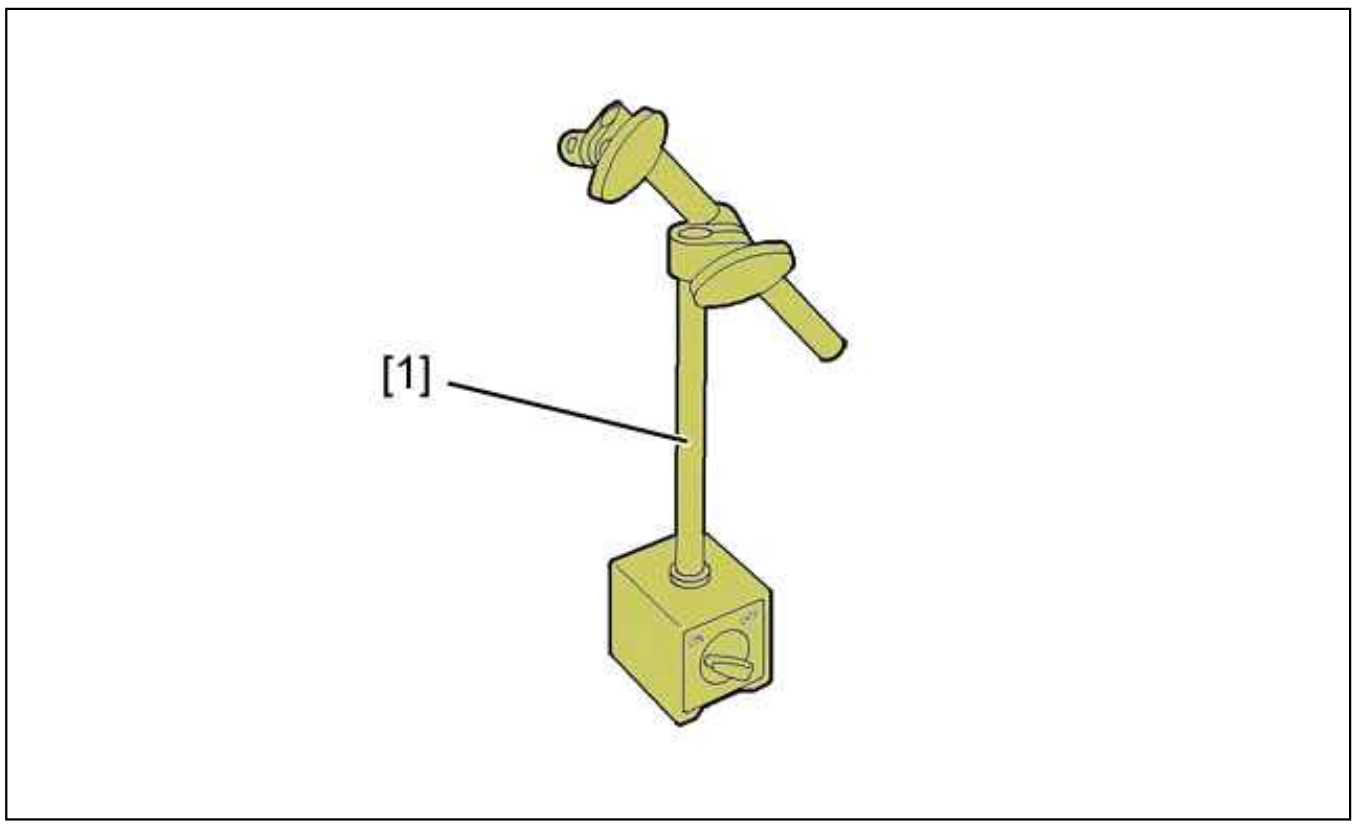

Figure : E5AP2XGD

[1] dial gauge magnetic support.

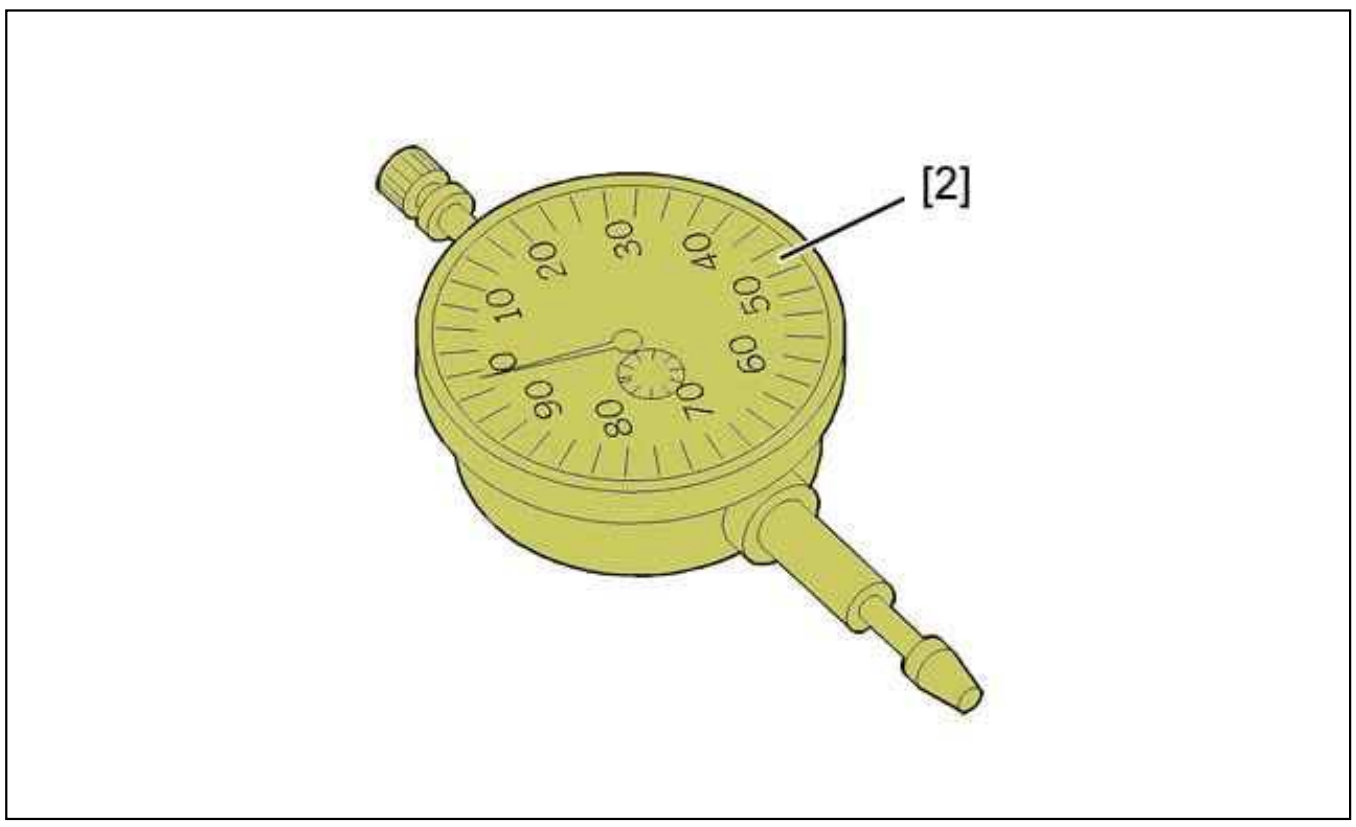

Figure : E5AP2XHD

[2] dial gauge 2437-T.

2. Preliminary operation

Untighten the rear wheel bolts.
Raise and support the vehicle, with the rear wheels hanging free.
Remove the rear wheels.

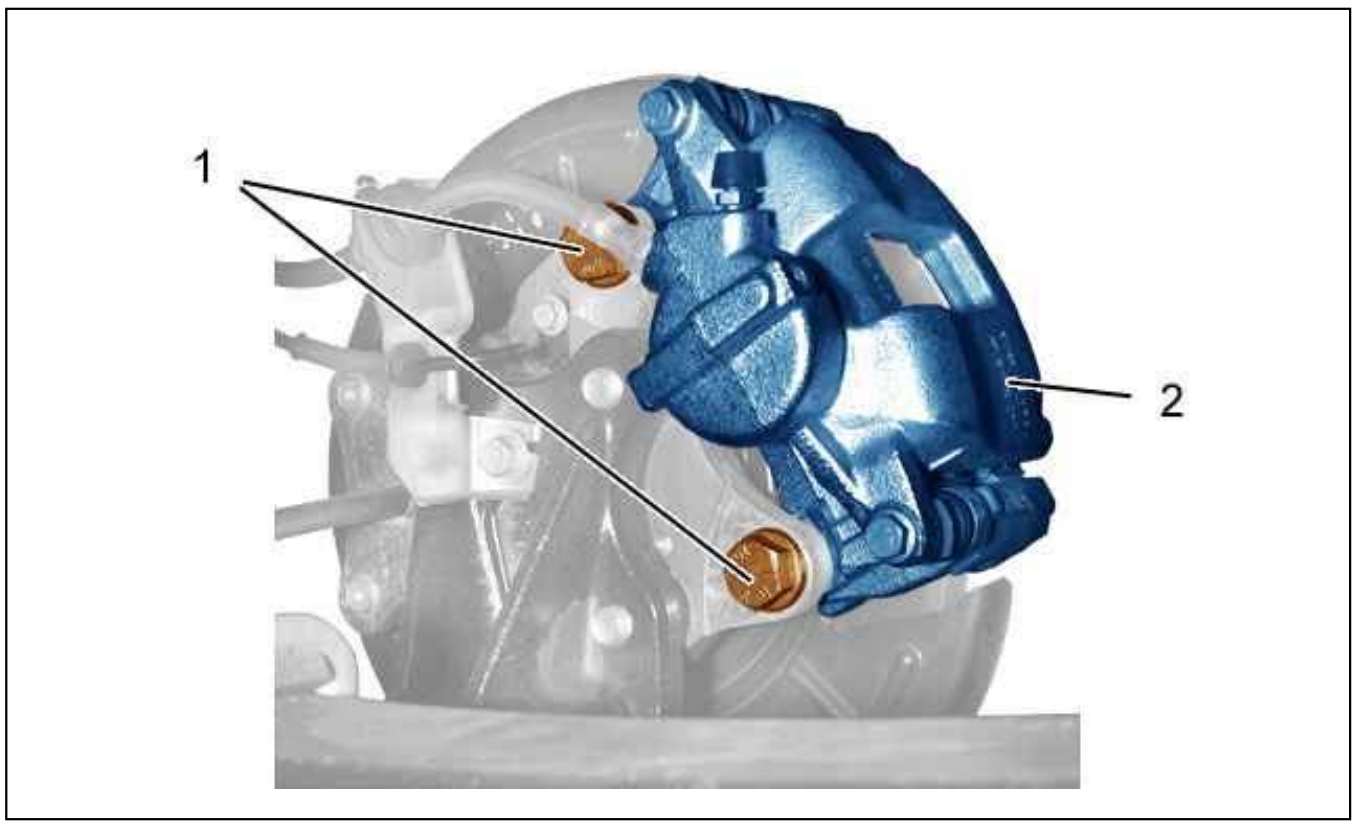

Figure : B3FP7KND

Remove :

- The rear brake pads (see the relevant operation)
- The bolts (1)

Move aside and suspend the brake caliper (2).

3. Checking the thickness

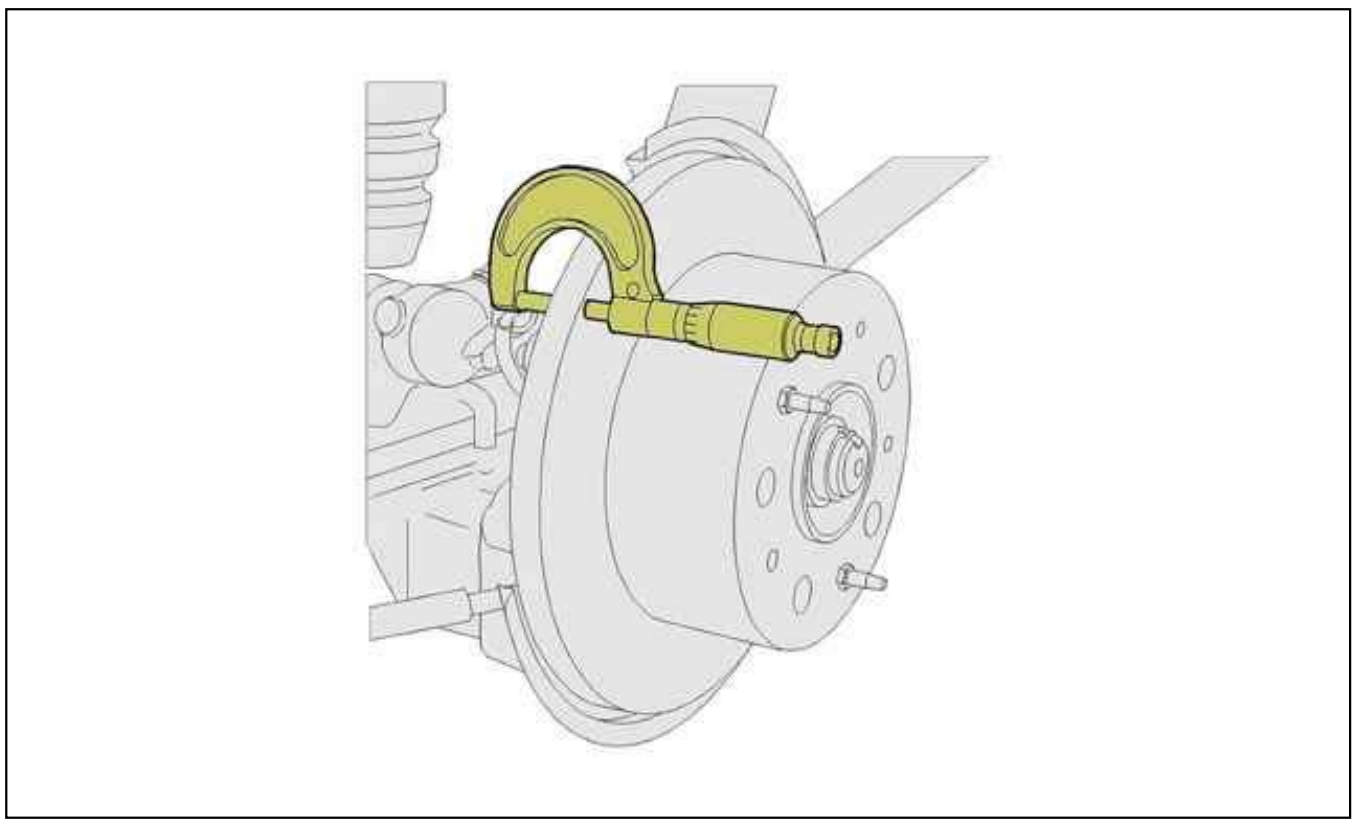
Figure : B3FP7KPD

Use a 0/50 mm micrometer.
Max. thickness variation on one circumference = 0,025 mm .
Nominal thickness : 15,9/16,2 mm .
Min. permissible thickness (wear) : 14,2 mm .
Always replace the discs that are not as thick as the value shown.
In the case of damage or deep scratches, the surfaces of the disc may be ground.
Minimum permitted thickness after grinding : 14,55 mm .

4. Checking the run-out

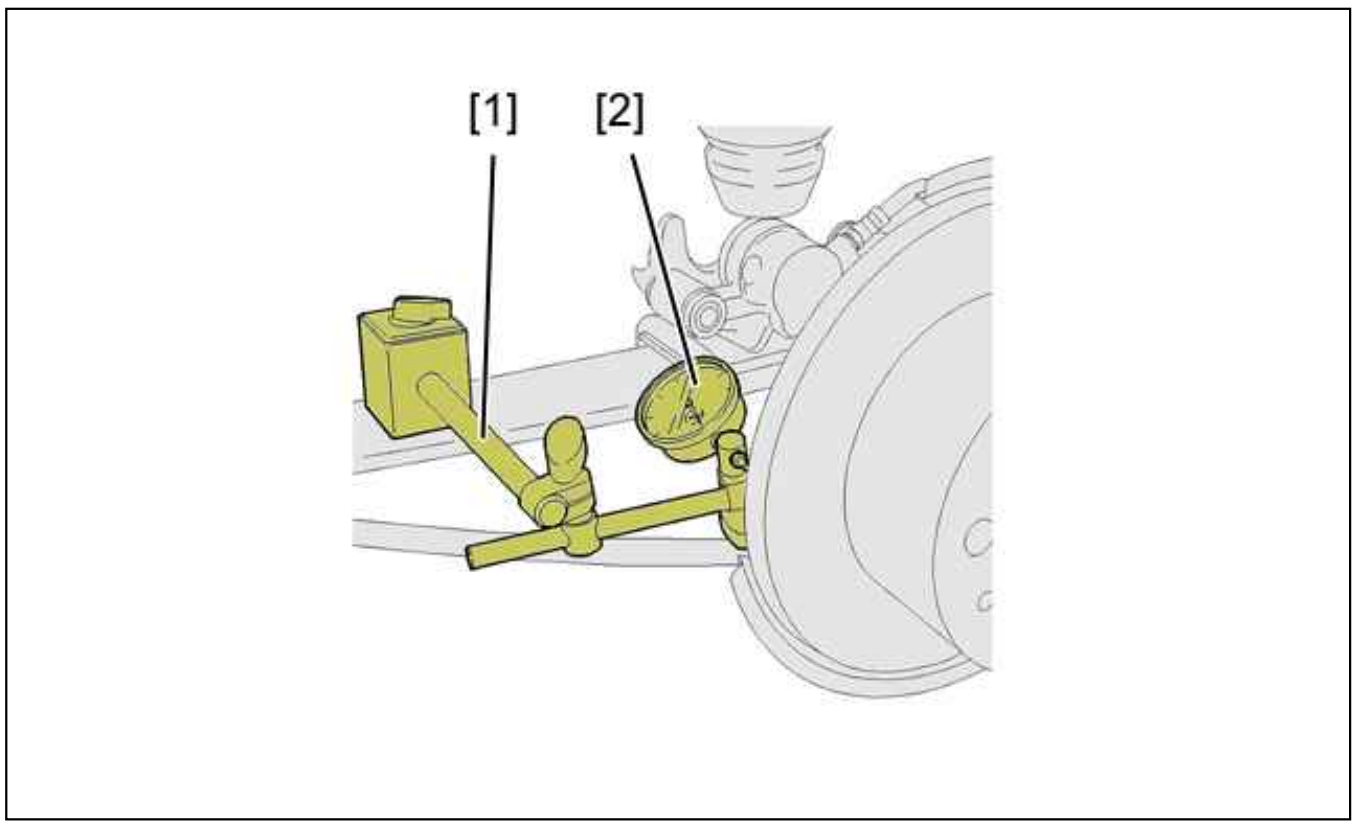

Figure : B3FP7KQD

Fix the magnetic support [1] on the spring leaf.
Attach the dial gauge [2] to the magnetic bracket [1].
The brake disc run-out check is carried out at approximately 2 mm from the outside diameter.
Turn the brake disc by a full rotation.
Maximum run-out = 0,030 mm .

5. Brake disc inside diameter check

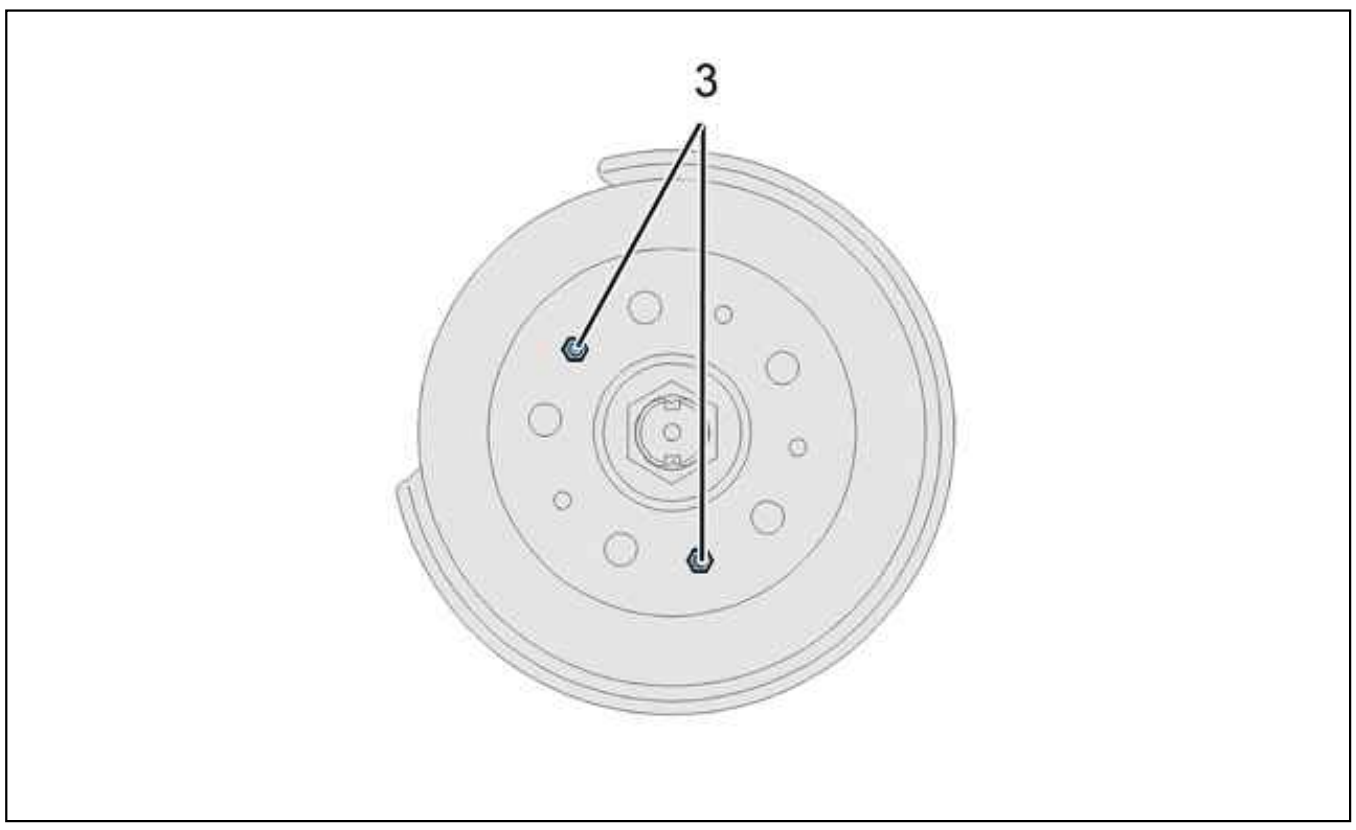

Figure : B3FP7K7D

Remove :

- The bolts (3)
- The rear brake disc

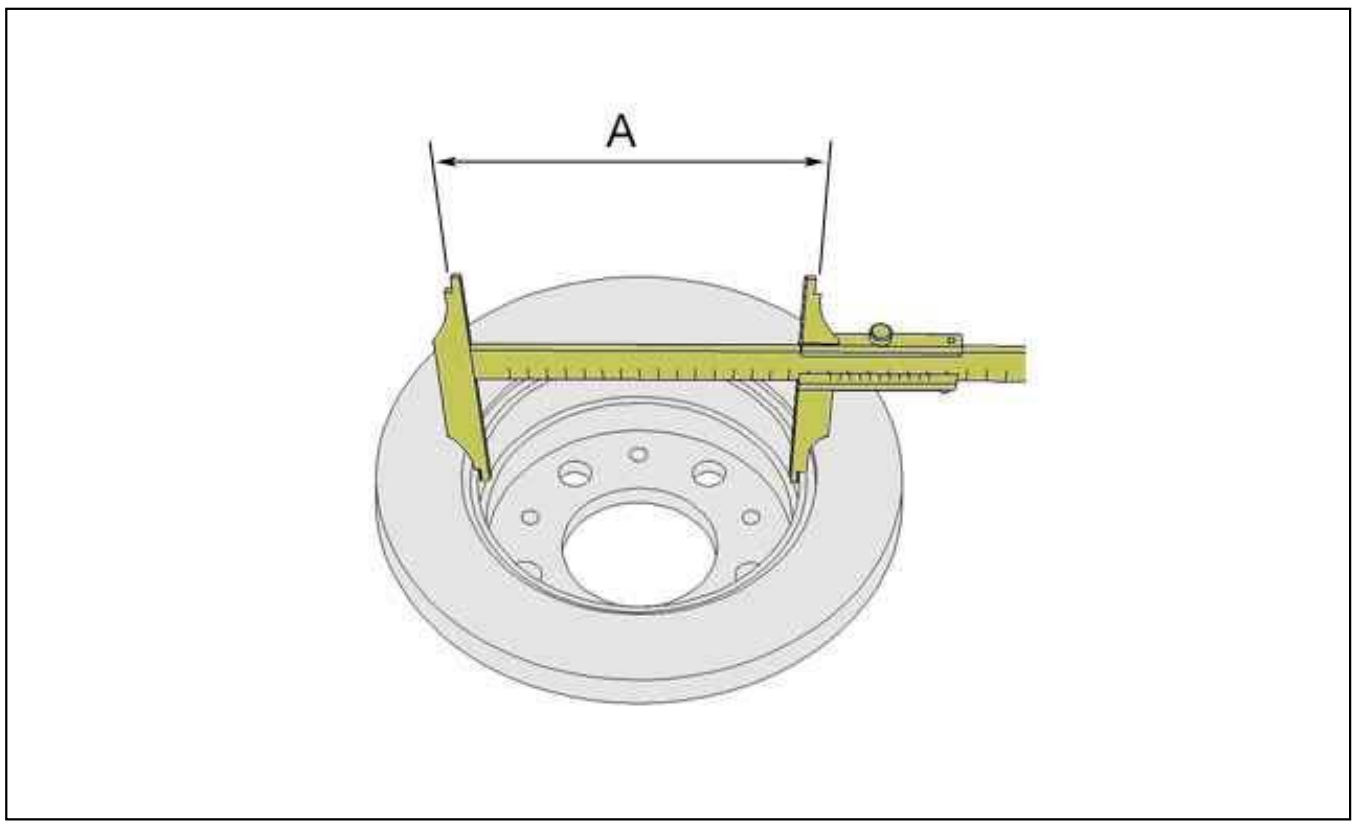

Figure : B3FP7KRD

A : Disc brake bore diameter :

- Nominal diameter : 172/172,15 mm
- Maximum permitted diameter after wear : 173 mm

Brake shoe lining : Min. permissible thickness = 1,5 mm .

6. Additional operations

Refit :

- The rear brake disc
- The bolts (3)

Tighten the bolts (3) to 1,2 ± 0,1 daN.m.
Position the brake caliper (2).
Refit the bolts (1) (new) (pre-coated with a thread locking product).
Tighten the bolts (1) to 16 ± 0,5 daN.m.
Fit the brake pads (see the relevant operation).
Apply the brakes, with the engine running, several times before driving the vehicle.
Check the operation of the brakes.
Refit the rear wheels.
Return the vehicle to its wheels.
Tighten the wheel bolts .

CHECK : FRONT BRAKE DISCS

ESSENTIAL : Observe the safety and cleanliness recommendations.

1. Recommended tools

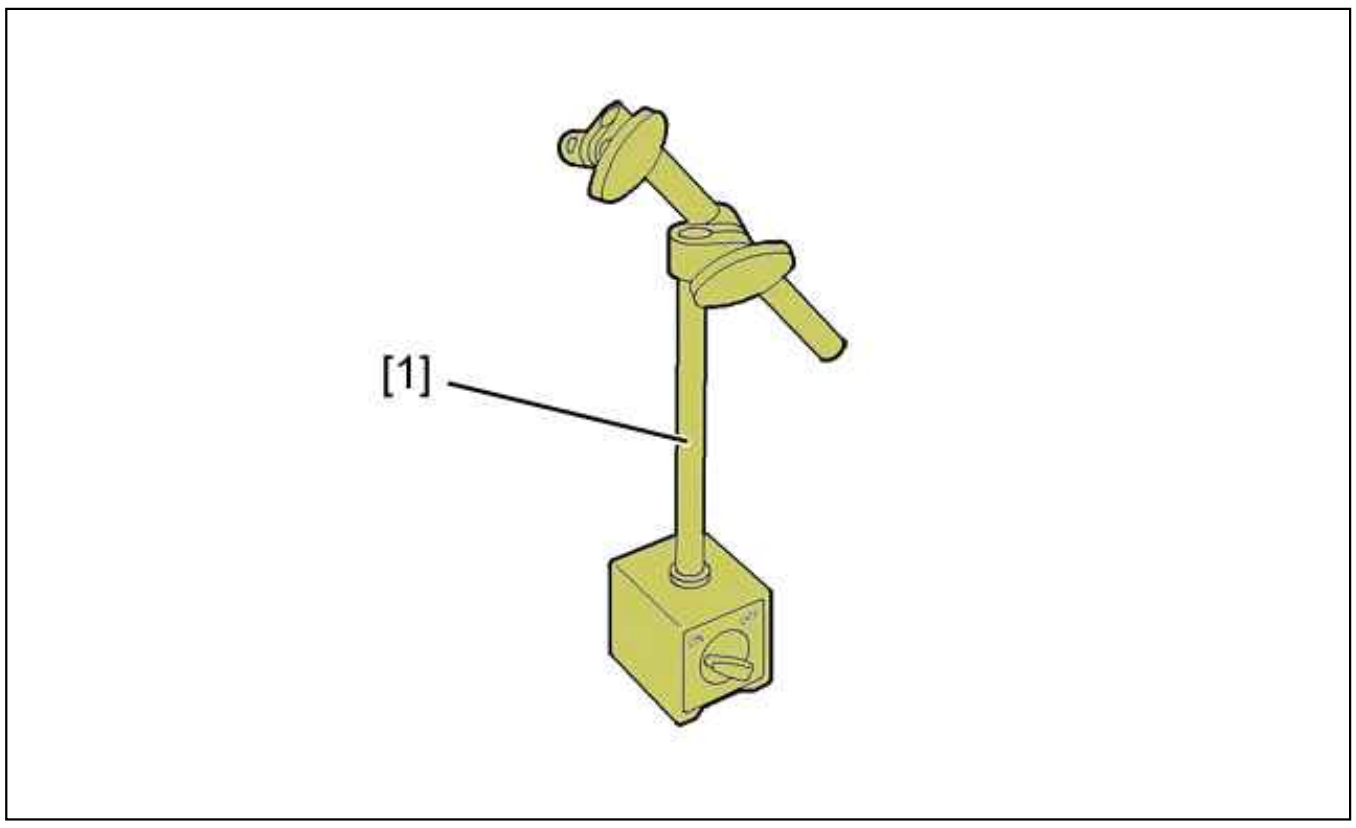

Figure : E5AP2XGD

[1] dial gauge magnetic support.

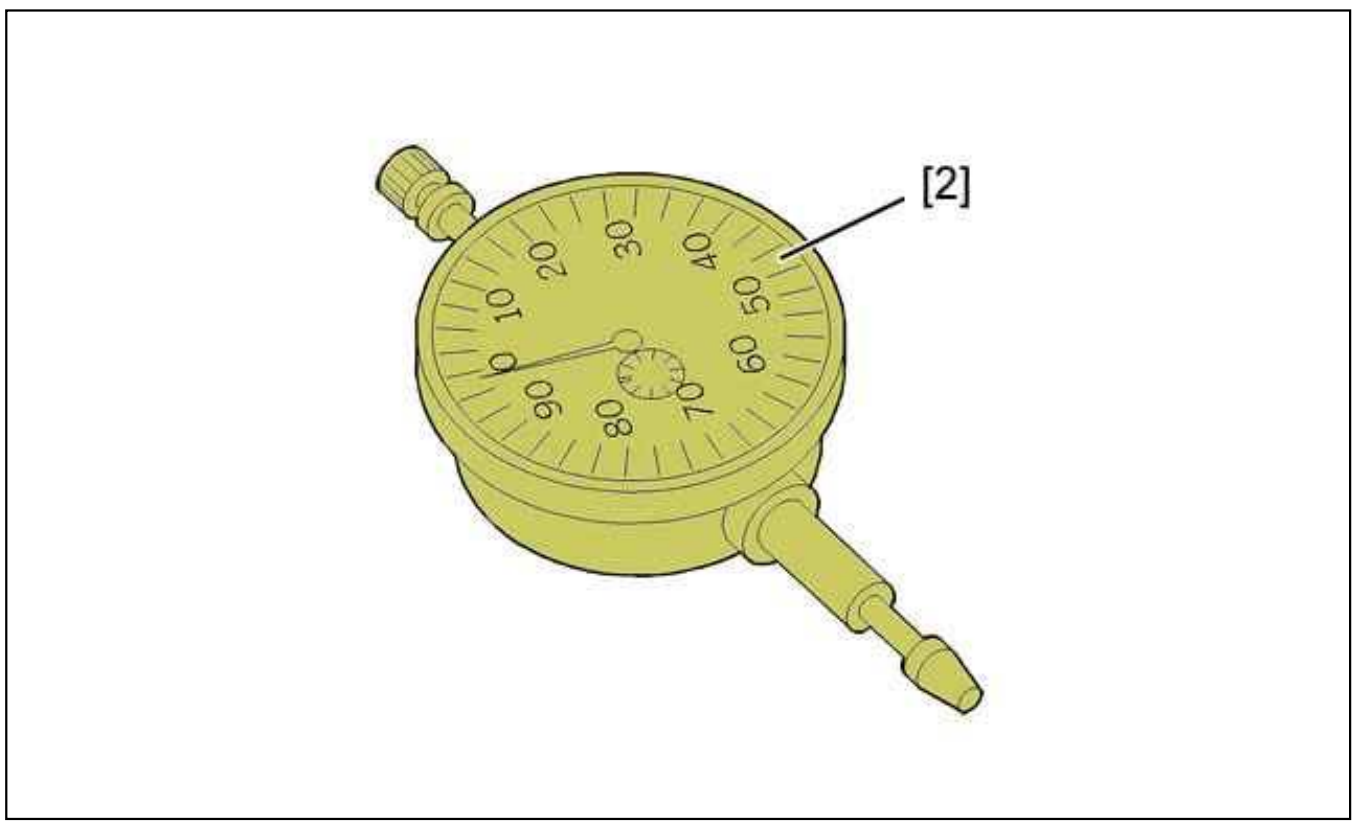

Figure : E5AP2XHD

[2] dial gauge 2437-T.

2. Preliminary operation

Untighten the wheel screws (front).
Lift and support the vehicle with front wheels suspended.
Remove the front wheels.

N.B. : The check is performed in the same way with or without brake caliper.

If need be, push the pistons back a little.

3. Checking the thickness

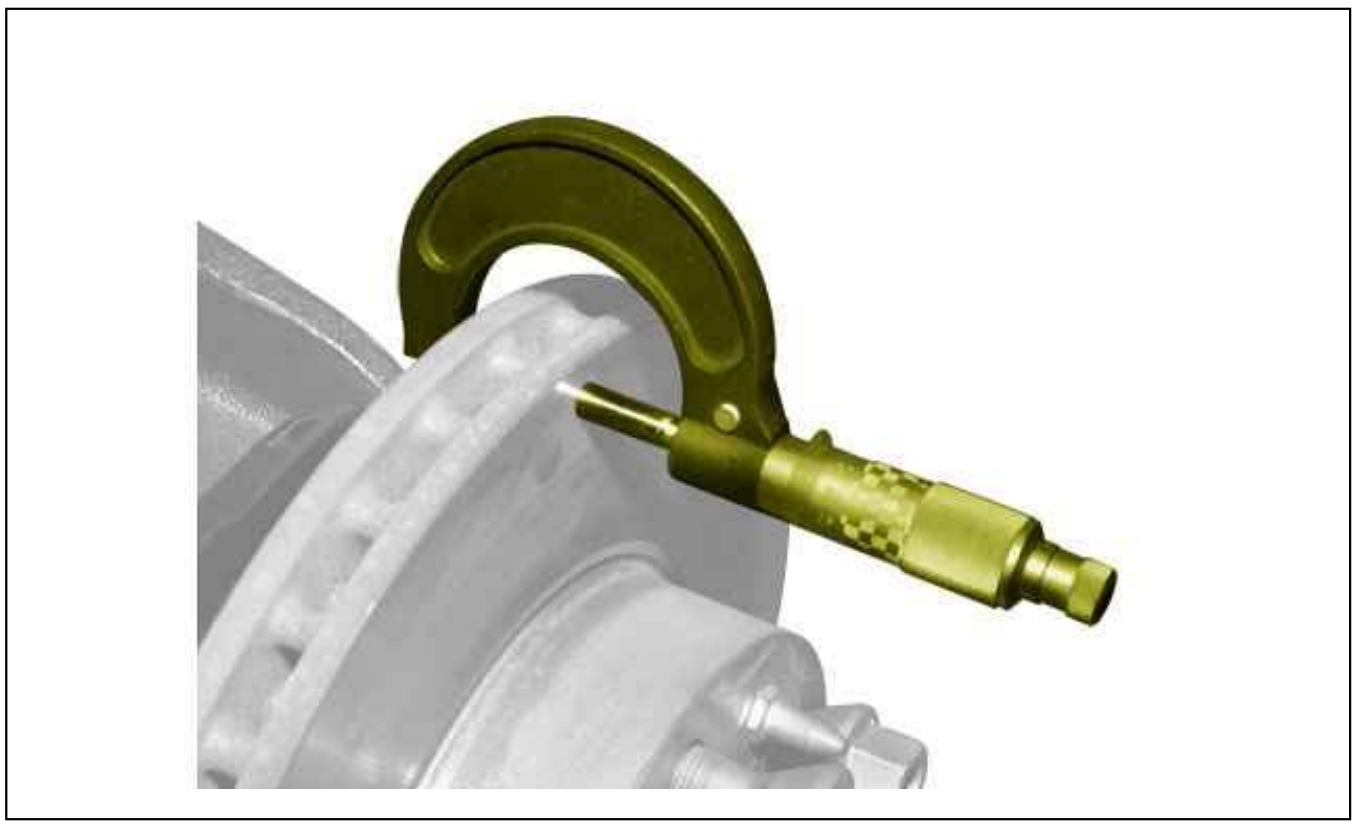

Figure : B3FP7KLD

Use a 0/50 mm micrometer.
Always replace the discs that are not as thick as the value shown.
In the case of damage or deep scratches, the surfaces of the disc may be ground.

Nominal dimensions (mm)	Nominal thickness (mm)	Min. permissible thickness (wear) (mm)	Minimum permitted thickness after grinding (mm)	Max. thickness variation on one circumference (mm)
Diameter 280 x 24	23,9 / 24,2	21,9	22,25	-
Diameter 300 x 24	-	-	-	0,015
Diameter 280 x 28	27,9 / 28,2	25,9	26,25	-
Diameter 300 x 32	31,9 / 32,2	29,9	30,25	-

4. Checking the run-out

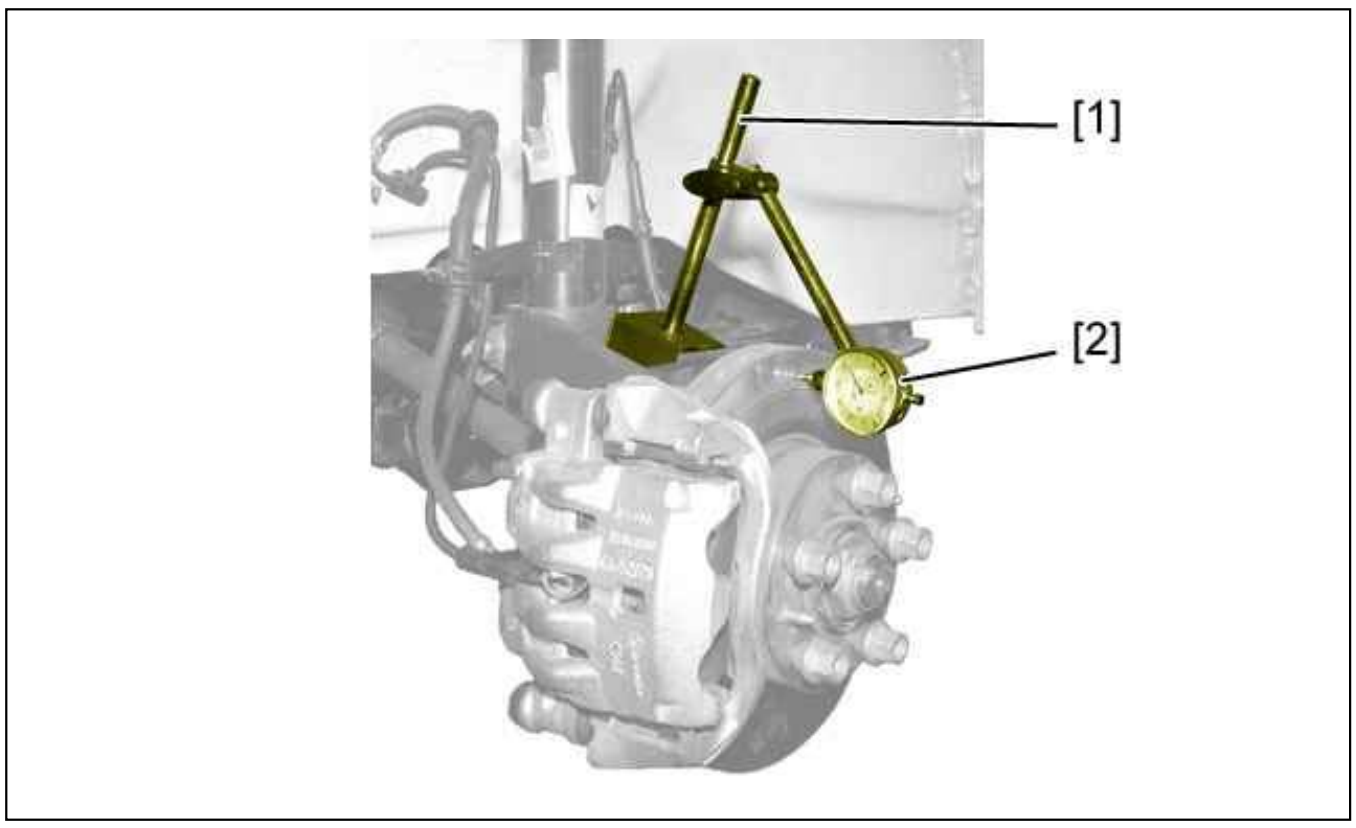

Figure : B3FP7KMD

Fix the magnetic bracket [1] onto the suspension leg.
Attach the dial gauge [2] to the magnetic bracket [1].
The brake disc run-out check is carried out at approximately 2 mm from the outside diameter.

CAUTION : To check the front brake disc run-out, turn the disc by means of the driveshaft.

Turn the brake disc by a full rotation.
Maximum run-out 0,050 mm .

5. Additional operations

Fit the wheels.
Return the vehicle to its wheels.
Tighten the wheel bolts .

CHECK : BRAKING SYSTEM

ESSENTIAL : Observe the safety and cleanliness recommendations .

1. Foreword

This document describes a brake wear checking method, it can be printed, as can the associated methods, at the request of the customer.

2. Tooling

CAUTION : The kit [0805] is not available from replacement parts. As a replacement, a dial gauge magnetic support can be used which will guarantee the measurements.

Equipment : Dial gauge magnetic support .

Tool	Reference	Designation
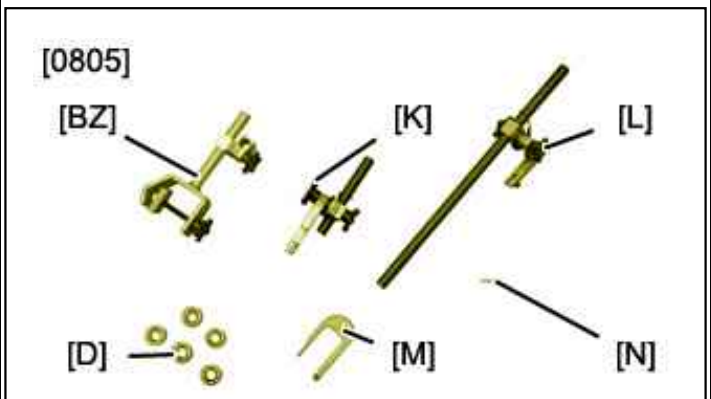 Figure : E5AB1CCT	[0805]	Disc/hub run-out checking tool
	[0805-BZ]	caliper
	[0805-K]	Disc check bracket + Ventilated disc fork
	[0805-L]	Disc check bracket
	[0805-D]	Non-ventilated disc fork
	[0805-M]	Spacer
	[0805-N]	dial gauge extension
 Figure : E5AB1CDT	[2437-T]	Dial gauge
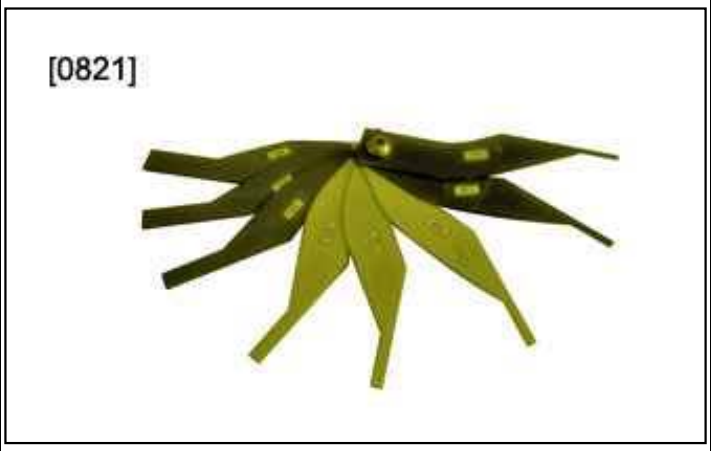 Figure : E5AB1JZT	[0821]	Set of feeler gauges to measure the brake pad wear

3. Front brake disc

Check the tightening torques of the wheels .

Raise and support the vehicle on a 2 -post lift.

3.1. Checking the run-out of the front brake disc (wheel fitted) (First possibility)

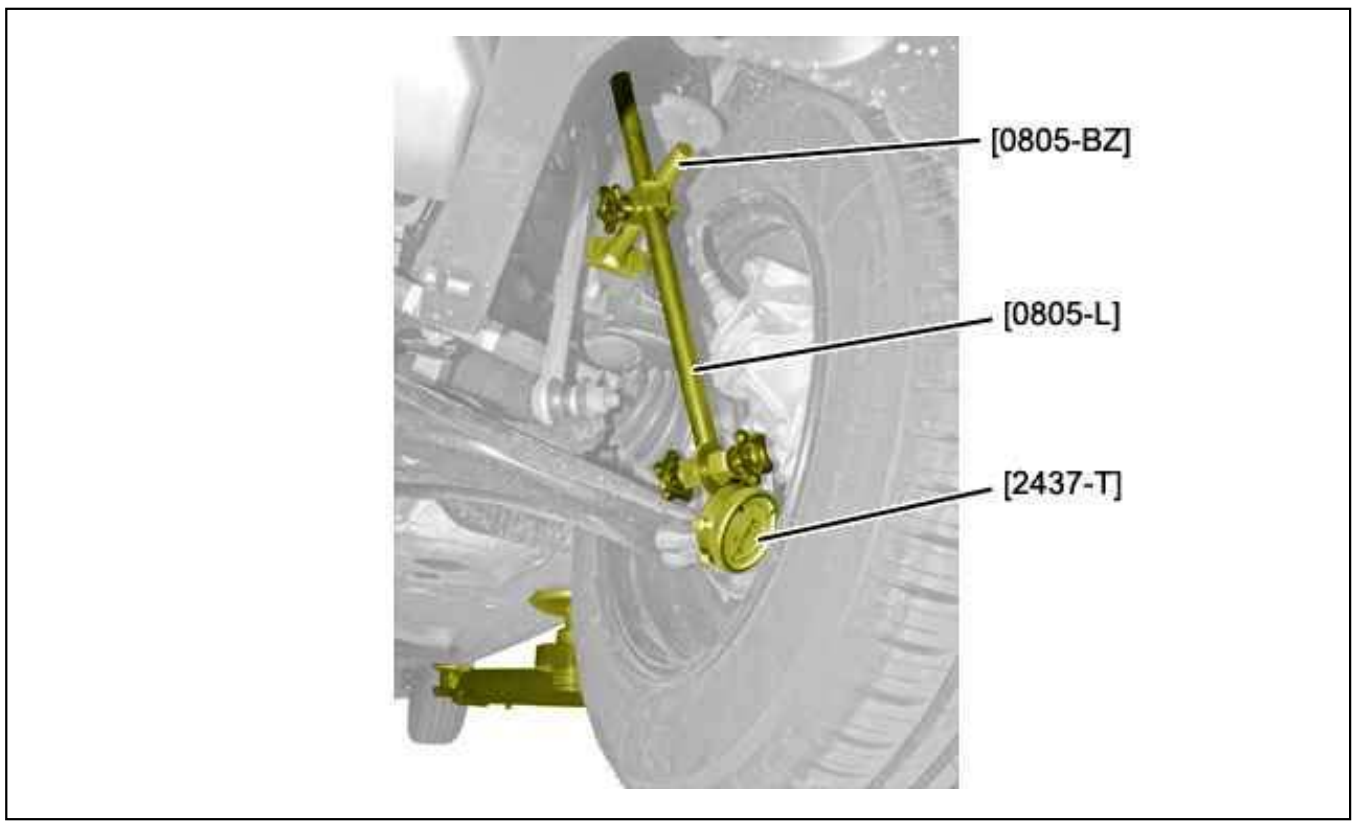

Figure : B3FD05CD

Fix :

- The assembly [0805-BZ], [0805-L] on the damper
- The dial gauge [2437-T] on the tool [0805-L]

Place the tip of the dial gauge [2437-T] in contact 10 mm from the periphery of the front brake disc (the tip under the action of the spring).

CAUTION : To check the front brake disc run-out, turn the disc by means of the driveshaft.

Carry out :

- A dial gauge zero reset
- One complete revolution of the front brake disc

Permissible run-out of the front brake disc assembled on the hub : Less than 0,05 mm.

3.2. Checking the run-out of the front brake disc (wheel fitted) (Second possibility)

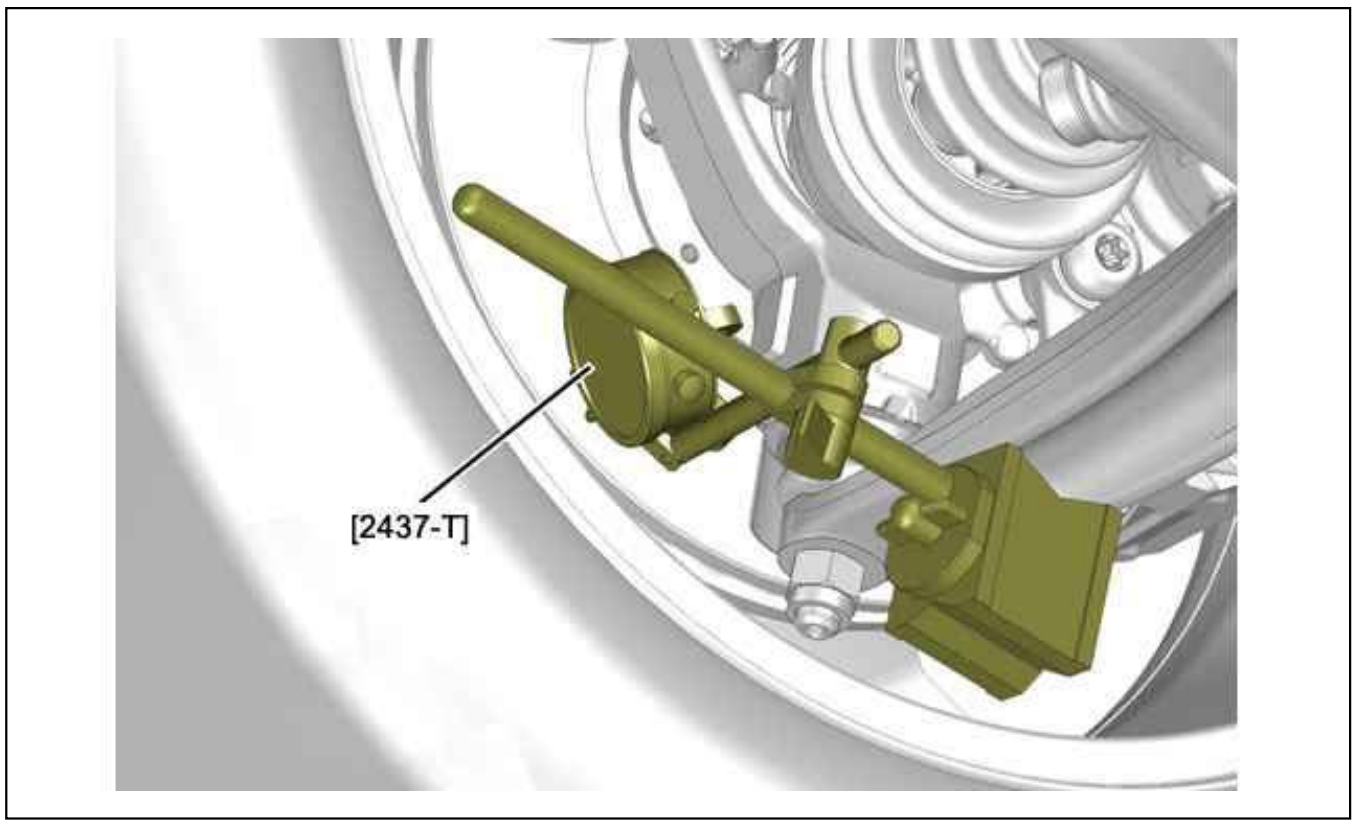

Figure : B3FD05DD

Fix the magnetic support on the lower suspension arm.
Fix the dial gauge [2437-T] on the magnetic support .
Place the tip of the dial gauge [2437-T] in contact 10 mm from the periphery of the front brake disc (the tip under the action of the spring).

CAUTION : To check the front brake disc run-out, turn the disc by means of the driveshaft.

Carry out :

- A dial gauge zero reset
- One complete revolution of the front brake disc

Permissible run-out of the front brake disc assembled on the hub : Less than 0,05 mm.

3.3. Checking the variation in the thickness of the front brake disc (Wheel removed) (First possibility)

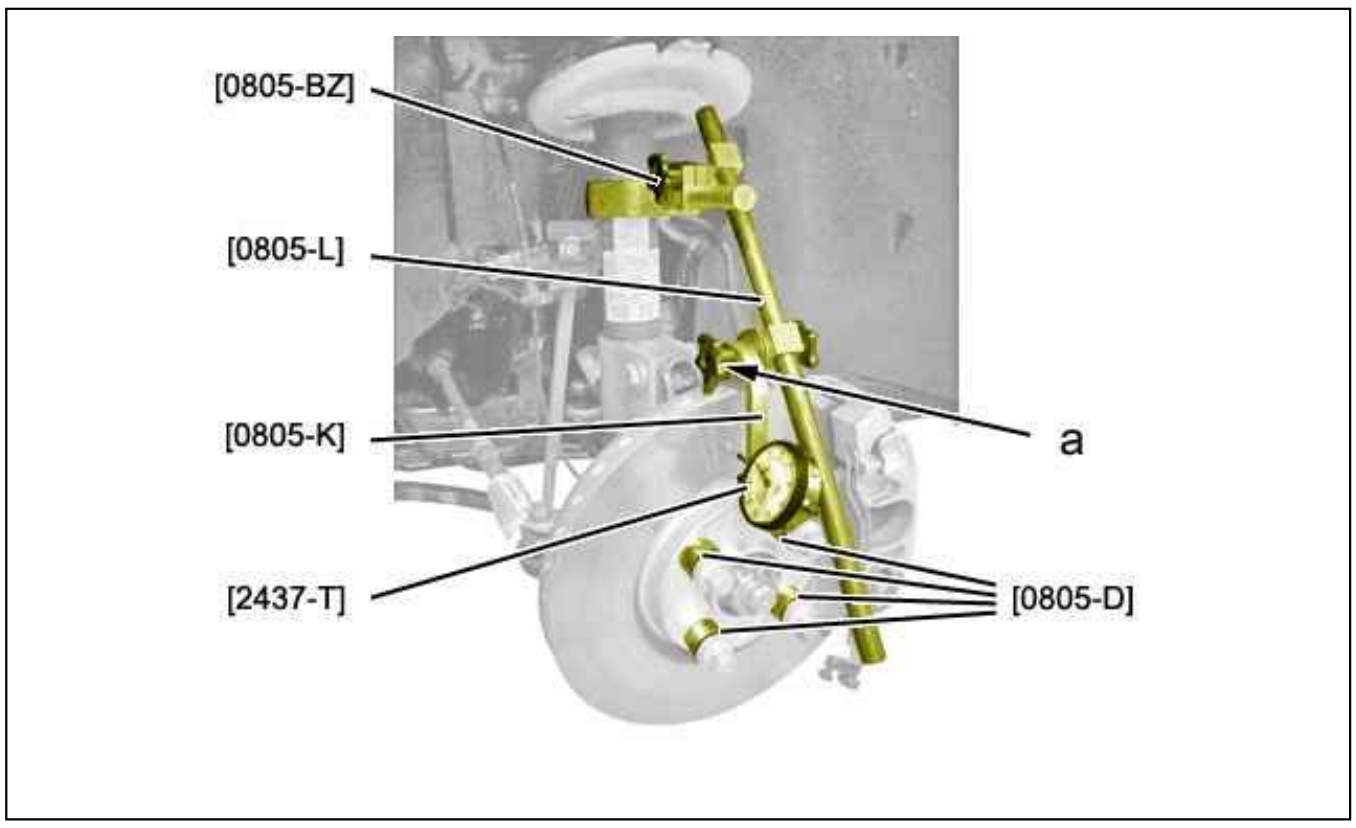

Figure : B3FD05ED

Refit and tighten the wheel bolts fitted with the tool [0805-D].
Fix :

- The assembly [0805-BZ], [0805-L] on the damper
- The dial gauge [2437-T] on the tool [0805-K]

Loosen the tool [0805-K] (at "a").
Place the tip of the dial gauge [2437-T] in contact 5 mm from the periphery of the brake disc (the tip under the action of the spring).

CAUTION : To check the variation in the thickness of the front brake disc, turn the brake disc by means of the driveshaft.

Carry out :

- A dial gauge zero reset
- One complete revolution of the front brake disc

Permissible variation in the thickness of the front brake disc over the same circumference of 0,01 mm.

3.4. Checking the variation in the thickness of the front brake disc (Wheel removed) (Second possibility)

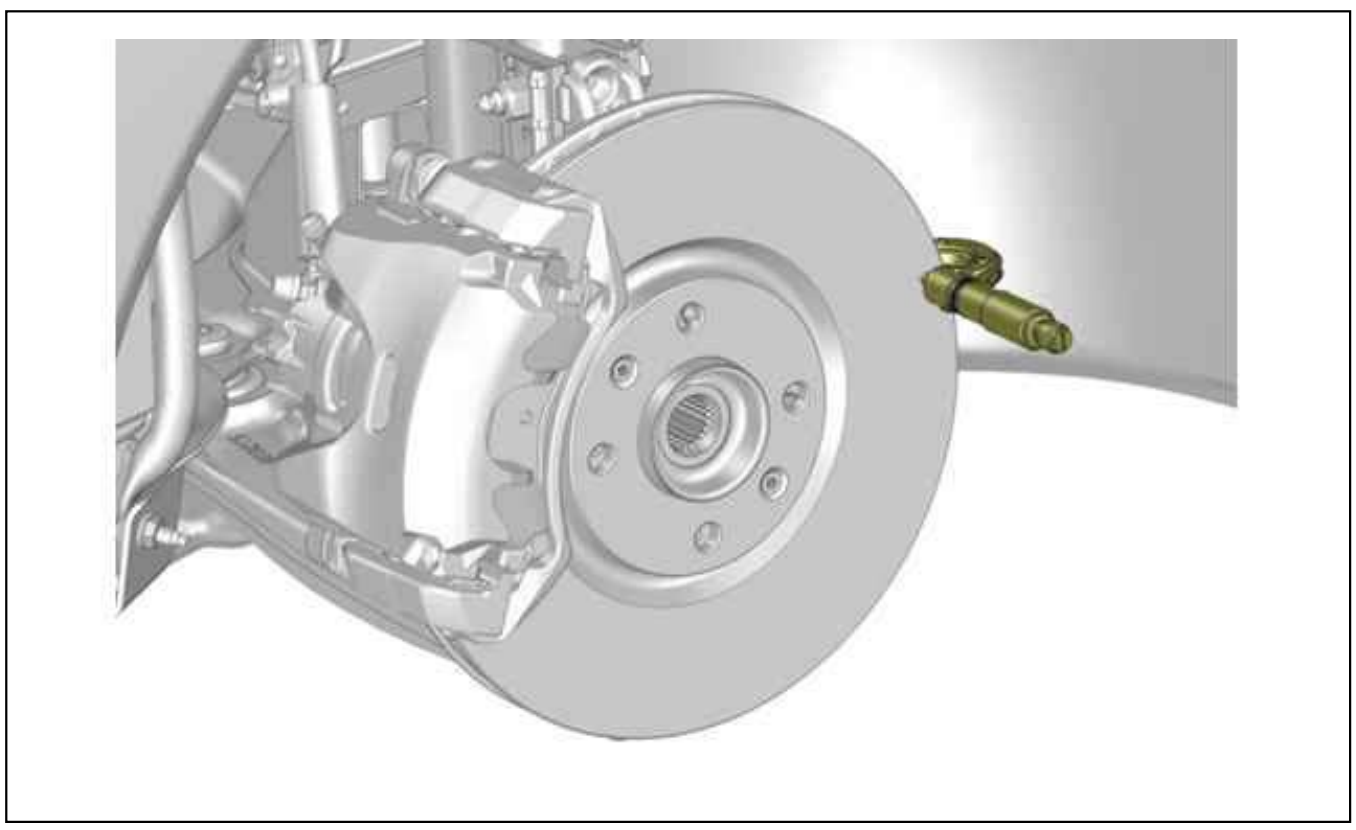

Figure : B3FD05FD

Check the variation in the thickness over the circumference at 8 points 5 mm from the periphery of the front brake disc ; Using a micrometer (Capacity: 0 - 50 mm).
Permissible variation in the thickness of the front brake disc over the same circumference of 0,01 mm.

3.5. Checking the thickness of the front brake disc (wheel removed)

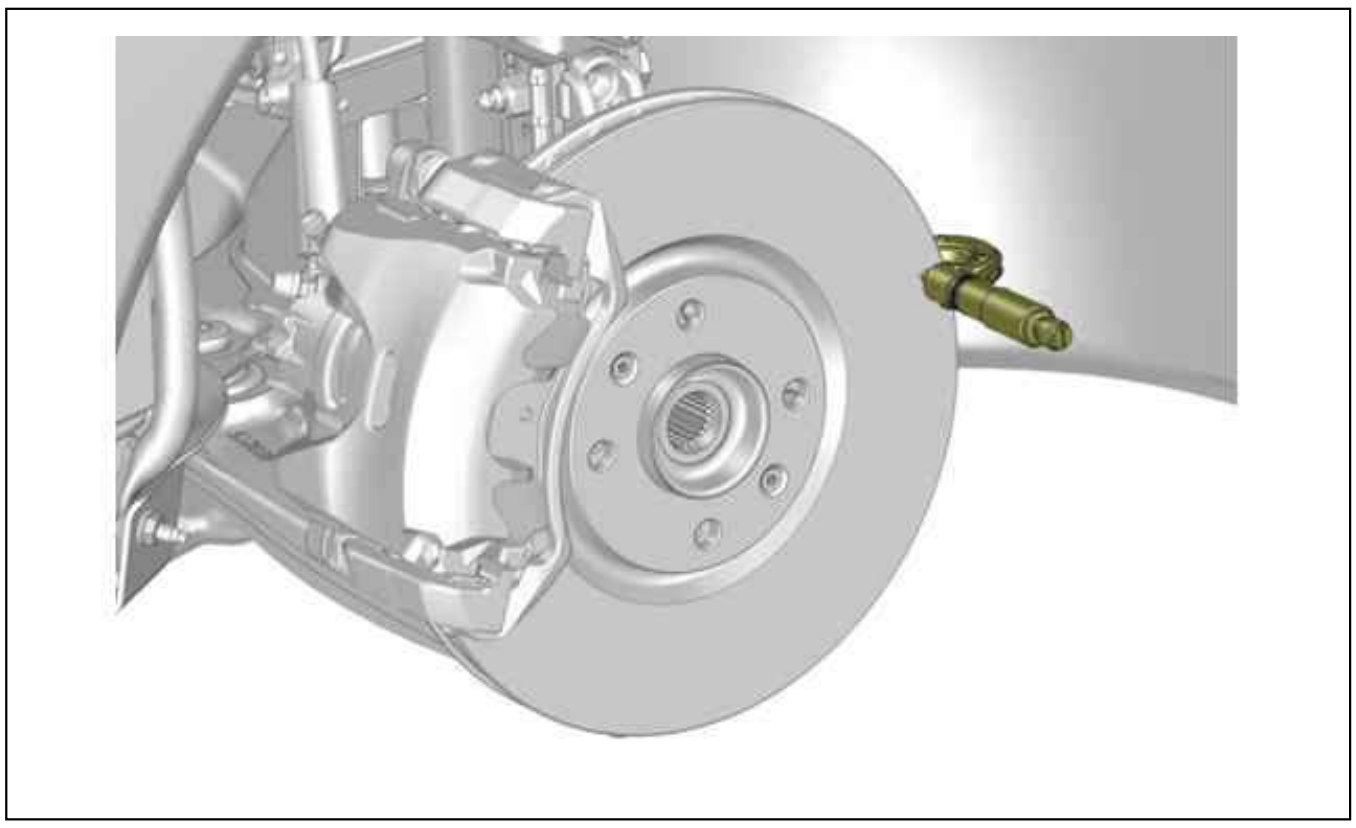

Figure : B3FD05FD

Measure the thickness of the front brake discs on the friction surfaces ; Using a micrometer (Capacity: 0 - 50 mm).
See the table below.

Front discs			
Special feature	Nominal diameter of a new disc	Thickness of a new disc	Minimum permitted thickness
Solid disc	247 mm	10 mm	8 mm
	247 mm	13 mm	11 mm
	266 mm	13 mm	11 mm
Ventilated disc	247 mm	20,4 mm	18,4 mm
	257 mm	20,4 mm	18,4 mm
	257 mm	22 mm	20 mm
Ventilated disc (ION - C-Zero)	257 mm	17 mm	15,4 mm
Ventilated disc	266 mm	20,4 mm	18,4 mm
	266 mm	22 mm	20 mm
	280 mm	24 mm	22 mm
	280 mm	28 mm	26 mm
	281 mm	26 mm	24 mm
	283 mm	26 mm	24 mm
	284 mm	22 mm	20,2 mm
	285 mm	28 mm	26 mm
	288 mm	28 mm	26 mm
	294 mm	24 mm	22,4 mm
	294 mm	26 mm	24,4 mm
	300 mm	24 mm	22 mm
	300 mm	32 mm	30 mm
	302 mm	26 mm	24 mm
	304 mm	28 mm	26 mm
	309 mm	32 mm	30 mm
	309 mm	32 mm	30 mm
	310 mm	32 mm	30 mm
	330 mm	30 mm	28 mm
	340 mm	30 mm	28 mm
	380 mm	32 mm	30 mm

4. Front hub

4.1. Checking the run-out : First possibility

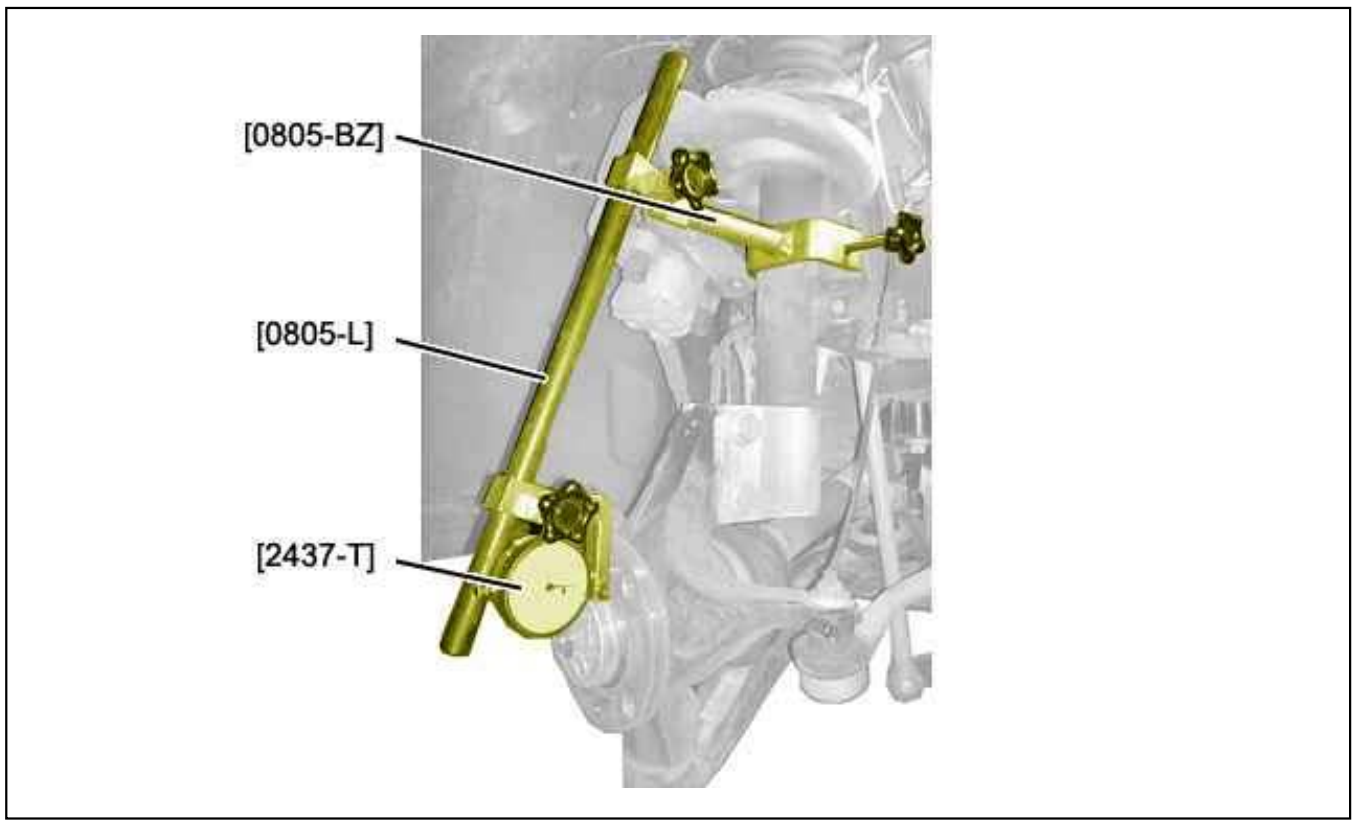

Figure : B3FD05ID

Check the tightening torque of the driveshaft nut.
Clean the hub/front brake disc contact surface ; Using an abrasive cloth.
Fix :

- The assembly [0805-BZ], [0805-L] on the damper
- The dial gauge [2437-T] on the tool [0805-L]

Place the tip of the dial gauge [2437-T] in contact as close as possible to the outer edge of the front hub (the tip under the action of the spring).

CAUTION : To check the run-out of the front hub, turn the hub by means of the driveshaft.

Carry out :

- A dial gauge zero reset
- A complete revolution of the front hub

Permissible run-out of the front hub : Less than 0,013 mm.

4.2. Checking the run-out : Second possibility

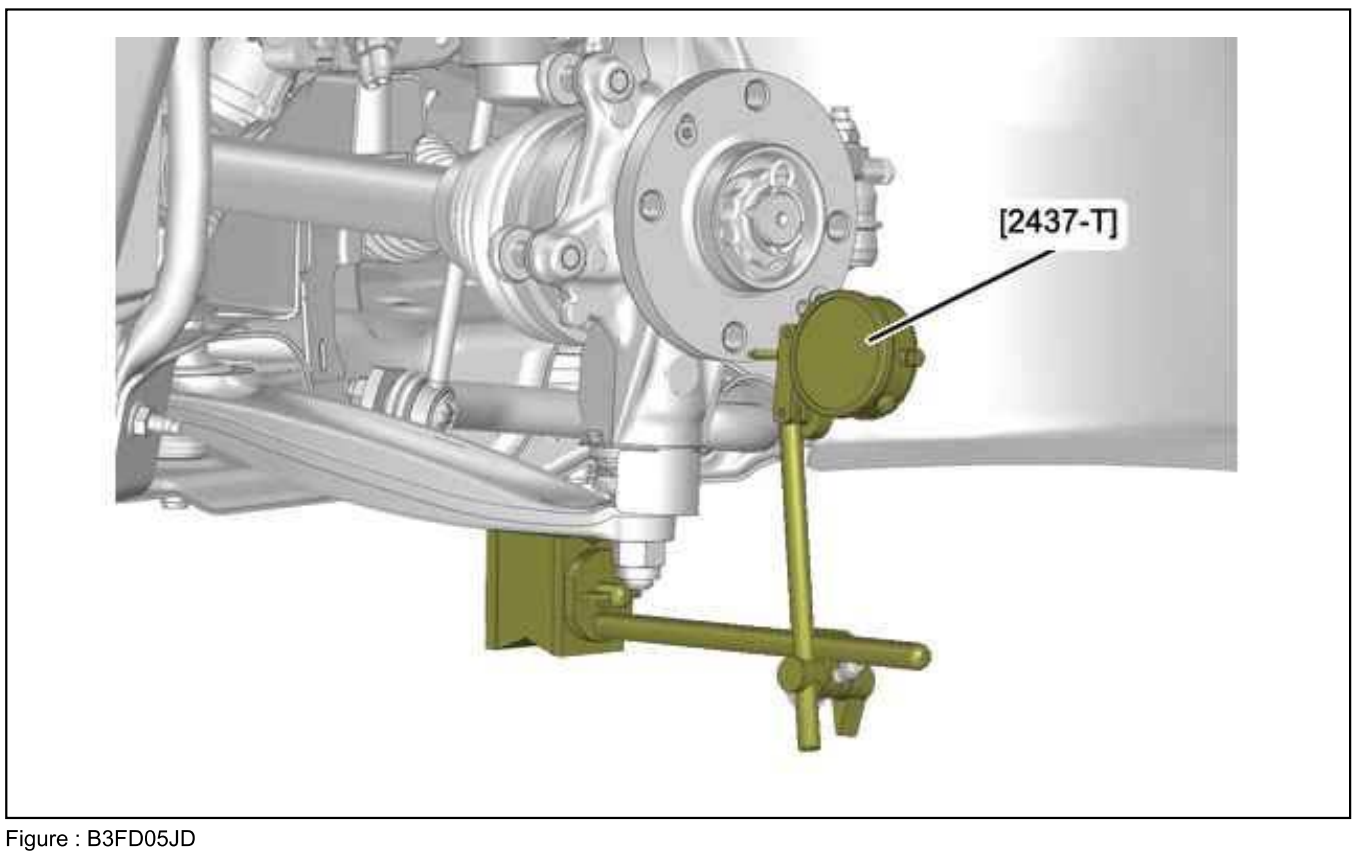

Figure : B3FD05JD

Fix :

- The magnetic support on the lower suspension arm
- The dial gauge [2437-T] on the magnetic support

Place the tip of the dial gauge [2437-T] in contact as close as possible to the outer edge of the front hub (the tip under the action of the spring).

CAUTION : To check the run-out of the front hub, turn the hub by means of the driveshaft.

Carry out :

- A dial gauge zero reset
- A complete revolution of the front hub

Permissible run-out of the front hub : Less than 0,013 mm.

5. Checking the thickness of the rear brake disc (wheel removed)

Slacken the parking brake .

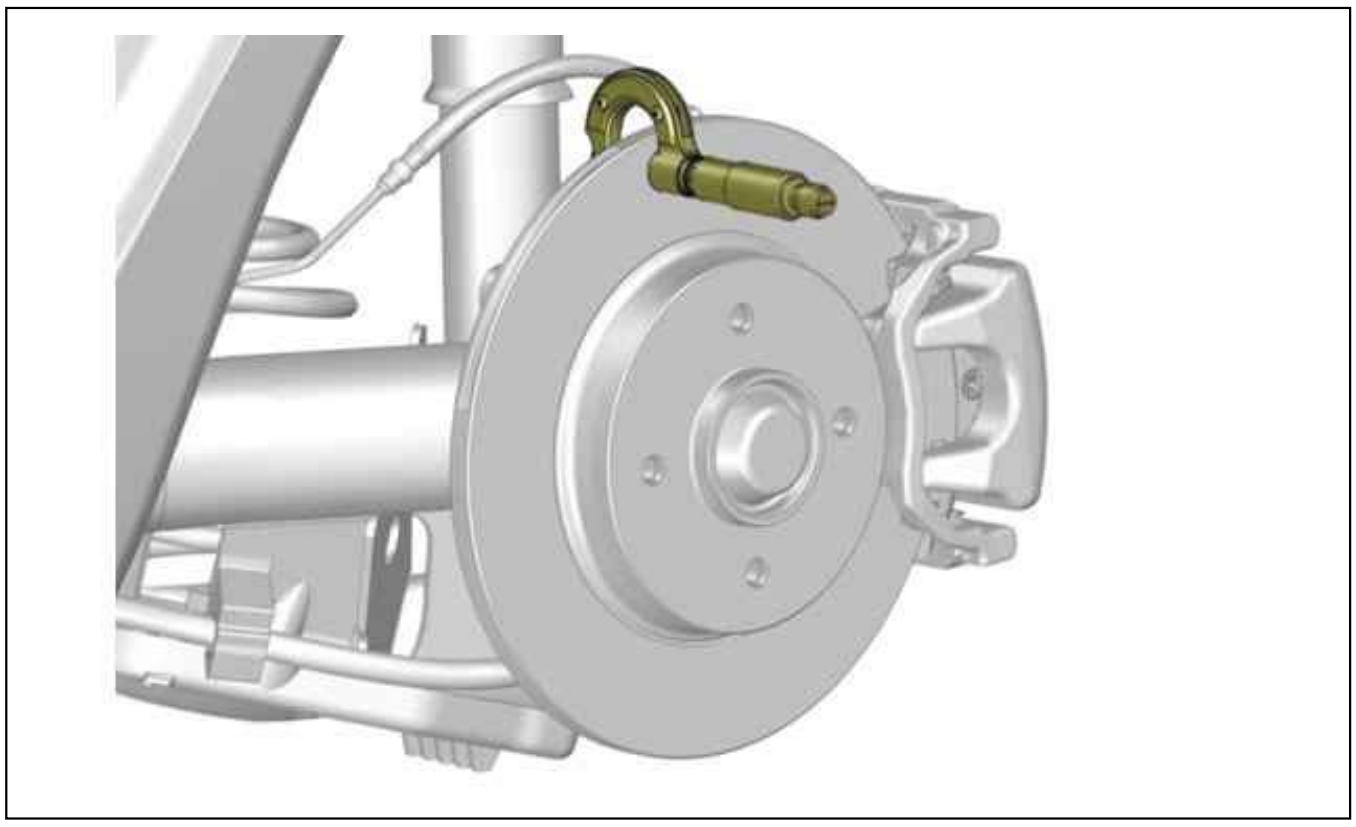

Figure : B3FD05KD

Measure the thickness of the rear brake discs on the friction surfaces ; Using a micrometer (Capacity: 0 - 50 mm).
See the table below.

Rear discs			
Special feature	Nominal diameter of a new disc	Thickness of a new disc	Minimum permitted thickness
Solid disc	247 mm	8 mm	6 mm
Solid disc hub	249 mm	9 mm	7 mm
	268 mm	12 mm	10 mm
Solid disc	272 mm	12 mm	10 mm
	274 mm	14 mm	12 mm
	280 mm	16 mm	14 mm
	290 mm	10 mm	8 mm
	290 mm	12 mm	10 mm
	290 mm	14 mm	12 mm
	300 mm	16 mm	14 mm
	302 mm	10 mm	8,4 mm
Ventilated disc	302 mm	22 mm	20 mm

6. Rear brake drum check

Slacken the parking brake .
Remove :

- The wheel
- The rear brake drum

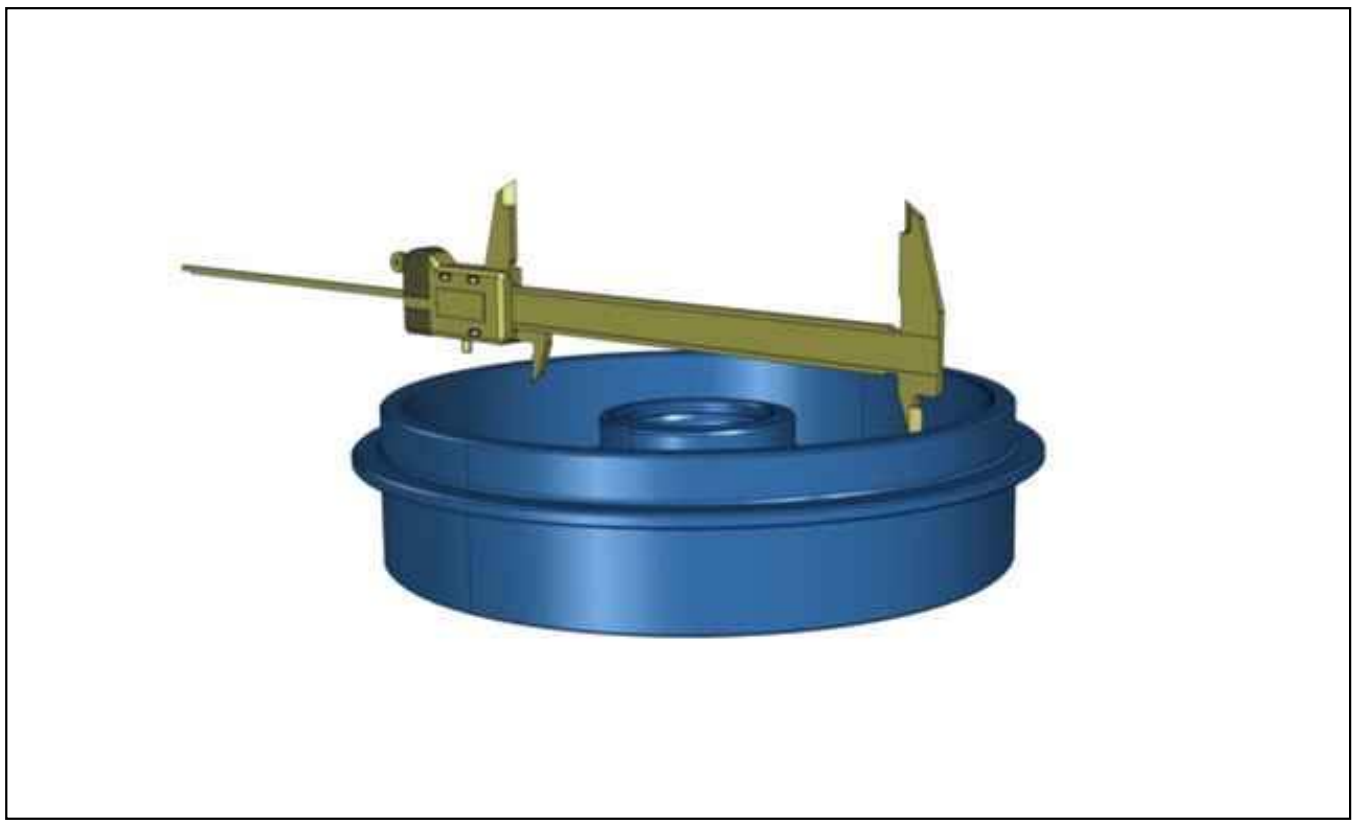

Figure : B3FD05LD

Measure the internal diameter of the rear brake drums on the friction surface ; Using sliding calipers .
See the table below.

Rear brake drum		
Drum	Nominal diameter of a new drum	Maximum permitted diameter
7’’	180 mm	182 mm

8’’	203 mm	204,4 mm
8" (ION - C-Zero)	203 mm	205 mm
9’’	228,6 mm	229,8 mm
10’’	254,15 mm	256 mm

Refit :

- The brake drum
- The wheel

7. Check of the thickness of the brake pad linings and brake shoe linings

Check the rear brake pad wear : Using tool [0821].

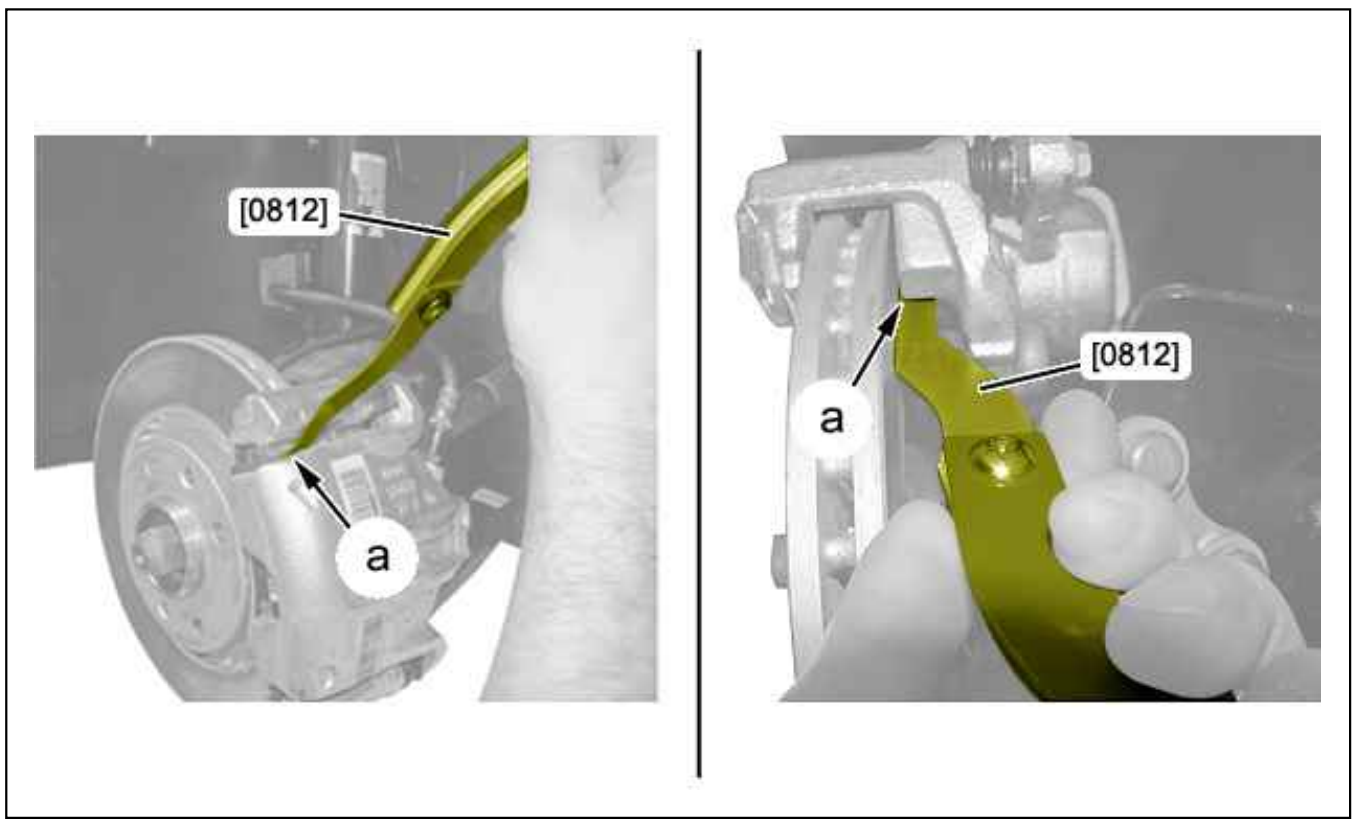

Figure : B3FD05UD

N.B. : Take several measurements at the points accessible using the tool [0821] (inside and outside) : For example at "a".

Vehicle	Minimum thickness of the brake pad linings (front)	Minimum thickness of the brake pad linings (rear)	Minimum thickness of the brake shoe linings
C-ZERO (S4)	2 mm	-	1 mm
C1 (B0)	1 mm	-	1 mm
C3 (Ai51)			
C2 (A6)	2 mm	2 mm	1 mm
C3 (A8)			
C3 (A31)			
C3 Pluriel (A42)			
C3 (A51)			
DS3 (A55)			
C3 Aircross (AI58)	2 mm	-	1 mm
C3 Picasso (A58)	2 mm	2 mm	-
C-ELYSEE (M43)	2 mm	-	1 mm
C-ELYSEE China	2 mm	2 mm	-
C4 (B53)	2 mm	2 mm	-
C4 PICASSO (B58)			
C4 PICASSO B78			
C4 (B7) -DS4			
C4 China (BX3)			
C4 L Russia (B7R)			
CITROEN C5 (X3)	2 mm	2 mm	1 mm
CITROEN C5 (X4)			
CITROEN C5 (X7)	3 mm	3 mm	-
CITROEN C5 (XW)			
DS5 (B81)	2 mm	2 mm	-
DS5 China (B8C)	2 mm	2 mm	-
C6 (X6)	2 mm	2 mm	-
C8 (VV)	3 mm	2 mm	-
C4 Aircross (J4)	2 mm	2 mm	1 mm
C-Crosser (I4)	2 mm	2 mm	1 mm
NEMO (MCV)	2 mm	2 mm	1 mm
BERLINGO (M49)	2 mm	-	1 mm
BERLINGO (M59)	2 mm	-	1 mm
BERLINGO (B9)	2 mm	2 mm	1 mm
DISPATCH - SYNERGIE (U6)			

DISPATCH 3 (G9)			
RELAY 2 (U5)	2 mm	2 mm	1 mm
RELAY 3 (U9)	2 mm	2 mm	1 mm

CHECK : BRAKE FLUID

ESSENTIAL : Observe the safety and cleanliness recommendations .

CAUTION : Brake fluid is toxic. Avoid contact with the skin and the eyes. In the event of contact with the eyes, rinse them immediately with copious amounts of water for several minutes.

CAUTION : Brake fluid is highly corrosive to paintwork. If any is projected onto the bodywork, clean the surface immediately.

1. Tooling

Brake fluid tester (*)		
make	Reference	Type
SURETEST	TLF	Measures the boiling point of the brake fluid
DOW AUTOMOTIVE	BETATEST	
FACOM TOOLS	DF.16	
EBT	06.1	Measures the specific gravity of the brake fluid

(*) Non-exhaustive list, refer to the catalogue "Tools and Equipment".

2. Check

Remove the brake fluid reservoir filter.

ESSENTIAL : Any contamination of the brake fluid is forbidden. The brake fluid should be clear and free from sediments or floating substances.

Check the fluid, following the instructions provided by the equipment supplier.

Checking values	
Brake fluid	Boiling point (minimum humidity)
DOT 3	140 °C
DOT 4	155 °C
SUPER DOT 4	180 °C
DOT 5	180 °C

N.B. : If the value checked is lower than the value for the "minimum humidity" boiling point, or within a tolerance of + 10 % of this value, replace the brake fluid (see the relevant operation).

ESSENTIAL : Use only approved and recommended hydraulic fluids.

ADJUSTMENT : PARKING BRAKE

ESSENTIAL : Observe the safety and cleanliness recommendations .

Untighten the rear wheel bolts.
Raise and support the vehicle, with the rear wheels hanging free.
Remove the rear wheels.
Depress the brake pedal several times.
Pull the parking brake lever firmly 4 to 5 times.
Slacken the parking brake .

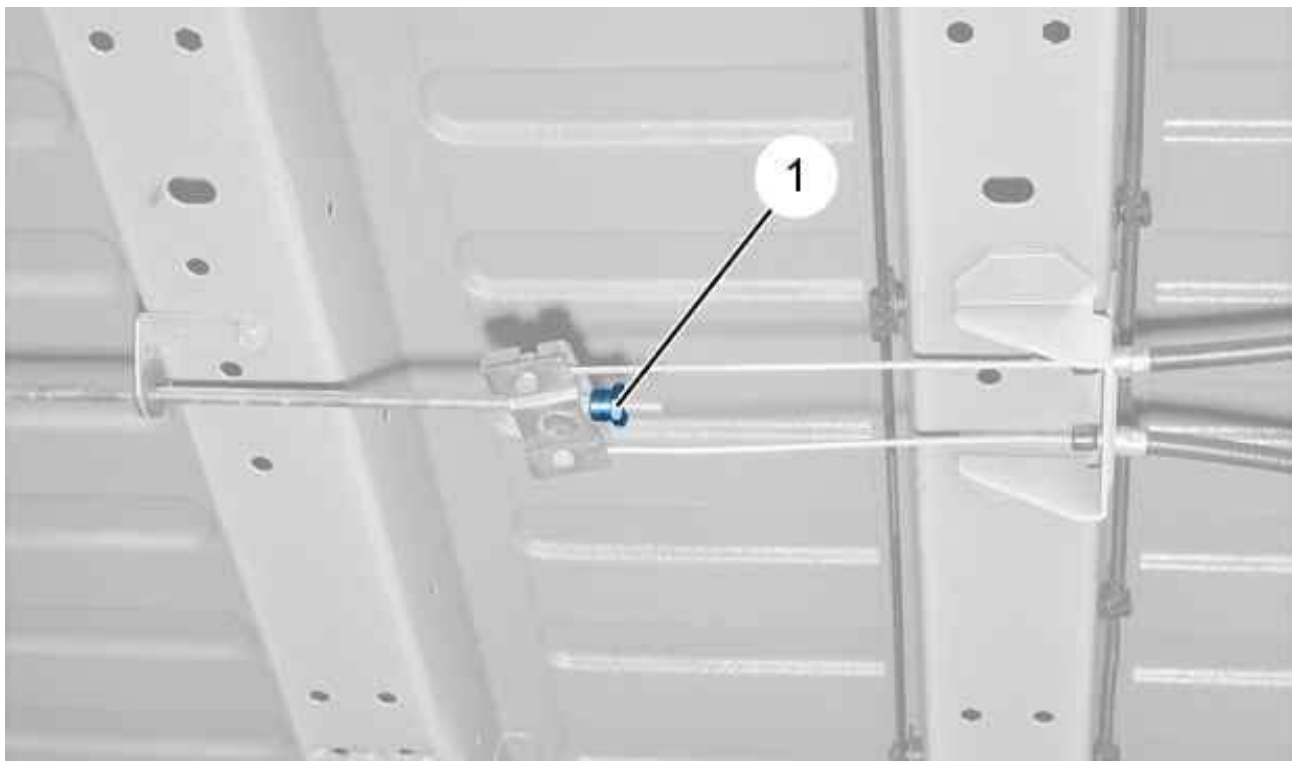

Figure : B3FP7NWD

Slacken the nut (1) in order to release the tension of the handbrake cable.

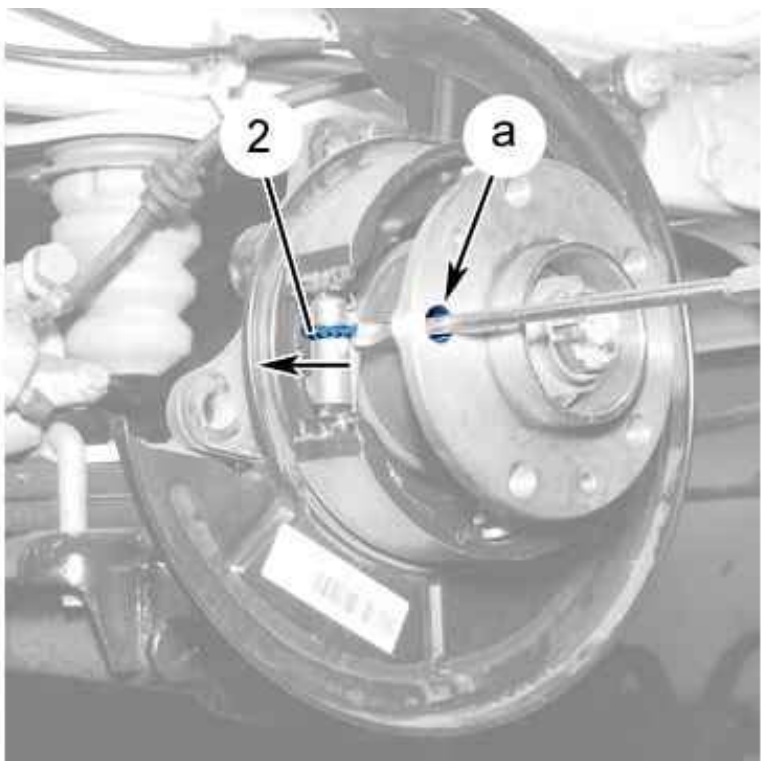

Figure : B3FP7NXD

Position the hole "a" opposite the toothed wheel (2) of the adjustment mechanism.
Turn the toothed wheel (2) to the left, to lock the rotation of the brake disc.
Release the disc by turning the toothed wheel (2) 5 ± 1 teeth in the opposite direction.

N.B. : The variation in the diameter of the shoes for 1 tooth is 0,035 mm. The clearance between the jaws and the brake drum should be 0,2 ± 0,04 mm.

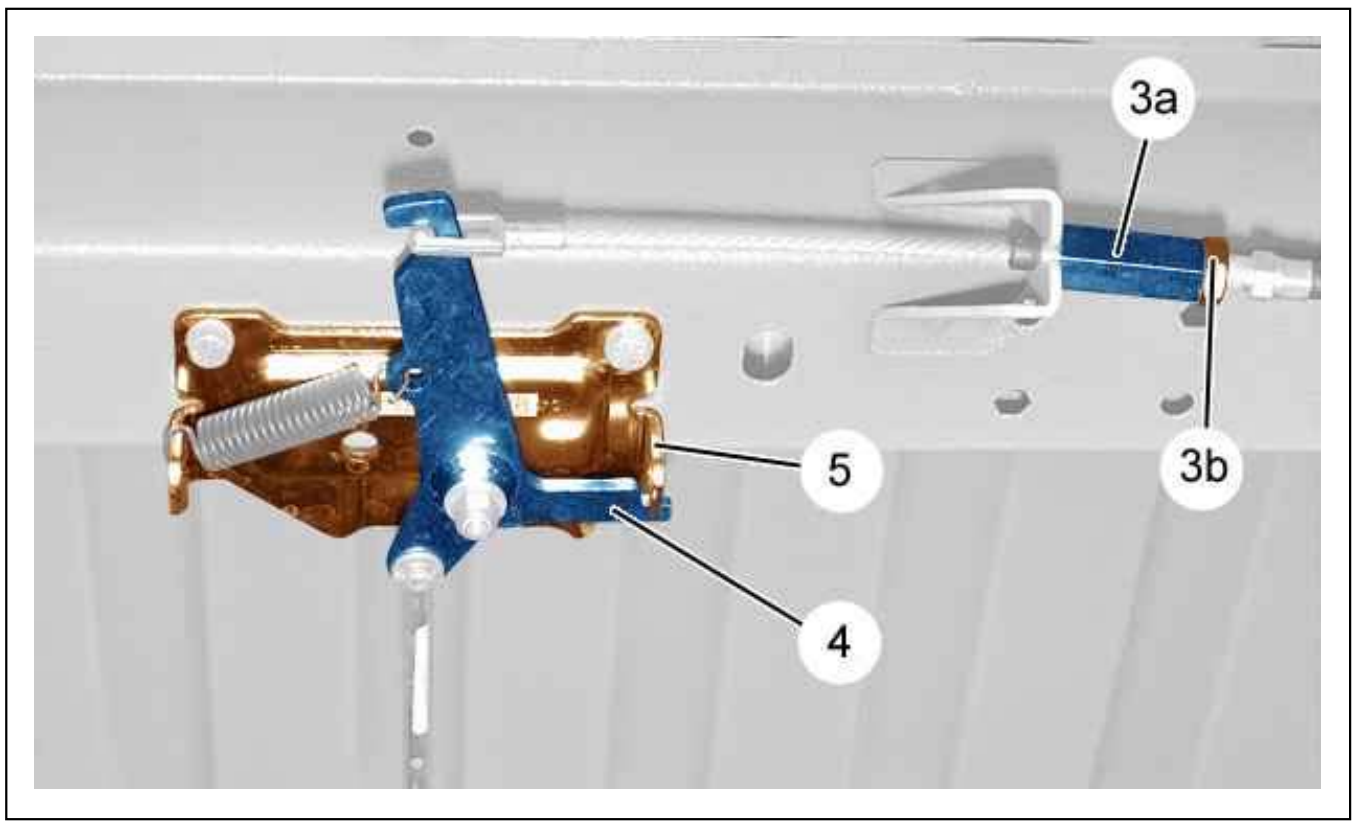

Figure : C5DP07JD

Slacken the locknut (3b).
Screw the nut (3a) until the lever (4) lifts slightly off the stop (5).
Tighten the locknut (3b).

CAUTION : Respect the tightening torque for the nut (1).

Tighten :

- The handbrake to the 6th notch
- The nut (1) to 1,5 m.daN

Pull the parking brake lever firmly 4 to 5 times.
Position the handbrake to the 6th notch.
Tighten the nut (1) to 1,5 m.daN.
Check that the rear brakes are applied.
With the handbrake released, check that the wheels can be turned freely by hand.
Refit the rear wheels.
Return the vehicle to its wheels.
Tighten the wheel bolts .

REMOVING - REFITTING : STOPLAMP SWITCH

1. Removing

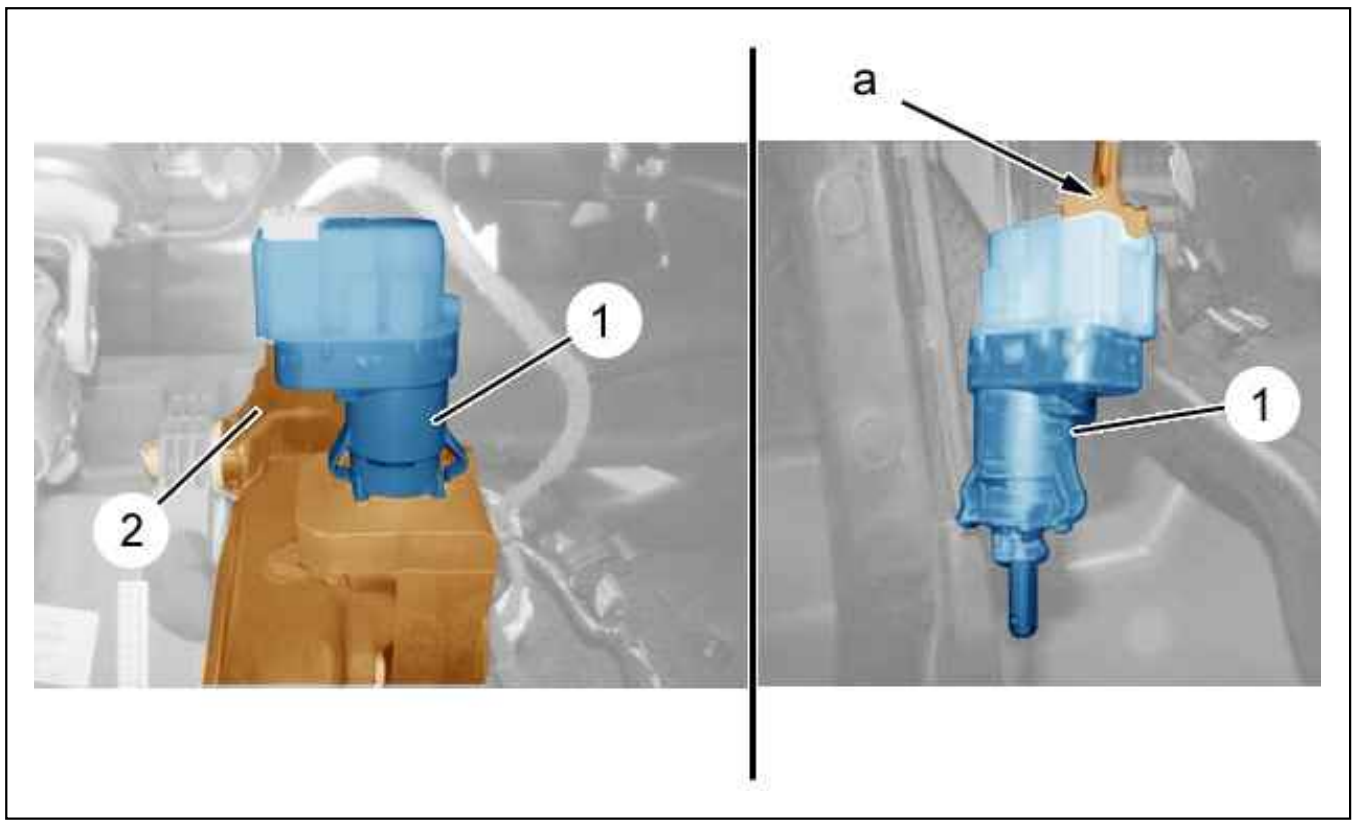

Figure : B3FG1Z0D

Turn : The stop lamp connector (1) (Clockwise).
Disengage the stoplamp switch (1) from the pedal bracket (2).
Disconnect the connector (at "a").

2. Refitting

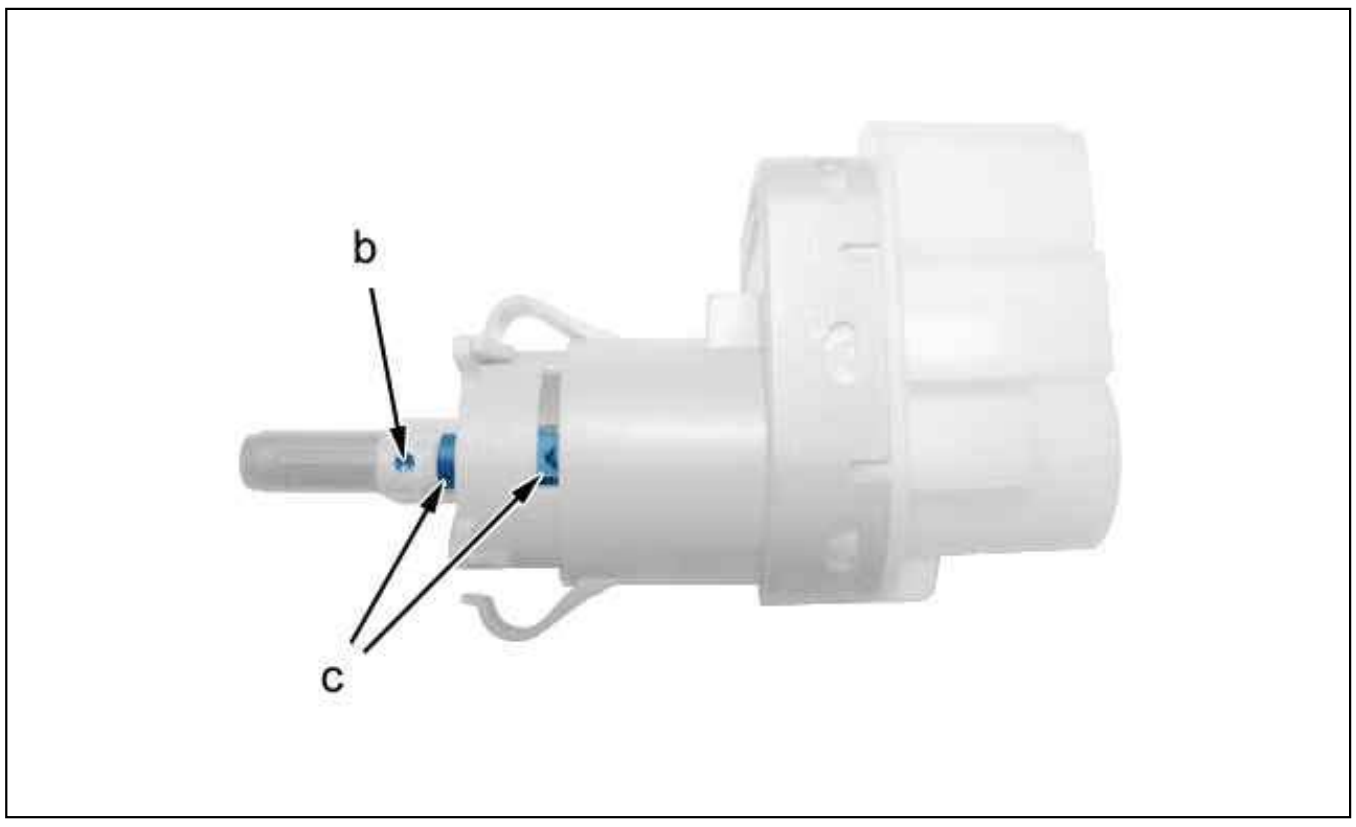

Figure : B3FG1Z3D

Line up the lug at "c" with the boss "b" on the stoplamp switch (if necessary).
Reconnect : The connector (at "a").
Engage the stoplamp switch (1) on the pedal bracket (2).
Turn : The stop lamp connector (1) (Anti-clockwise).
Verify :

- That the stoplamp switch is on securely
- The switching on of the brake lamps

REMOVING - REFITTING : GYROMETER / ACCELEROMETER SENSOR

ESSENTIAL : Observe the safety and cleanliness recommendations .

1. Tooling

A diagnostic tool.

2. Location



Figure : B3FG29ED

(1) Accelerometer-gyrometer sensor.

3. Removing

Disconnect the battery.



Figure : B3FG29FD

Remove the cover (2).

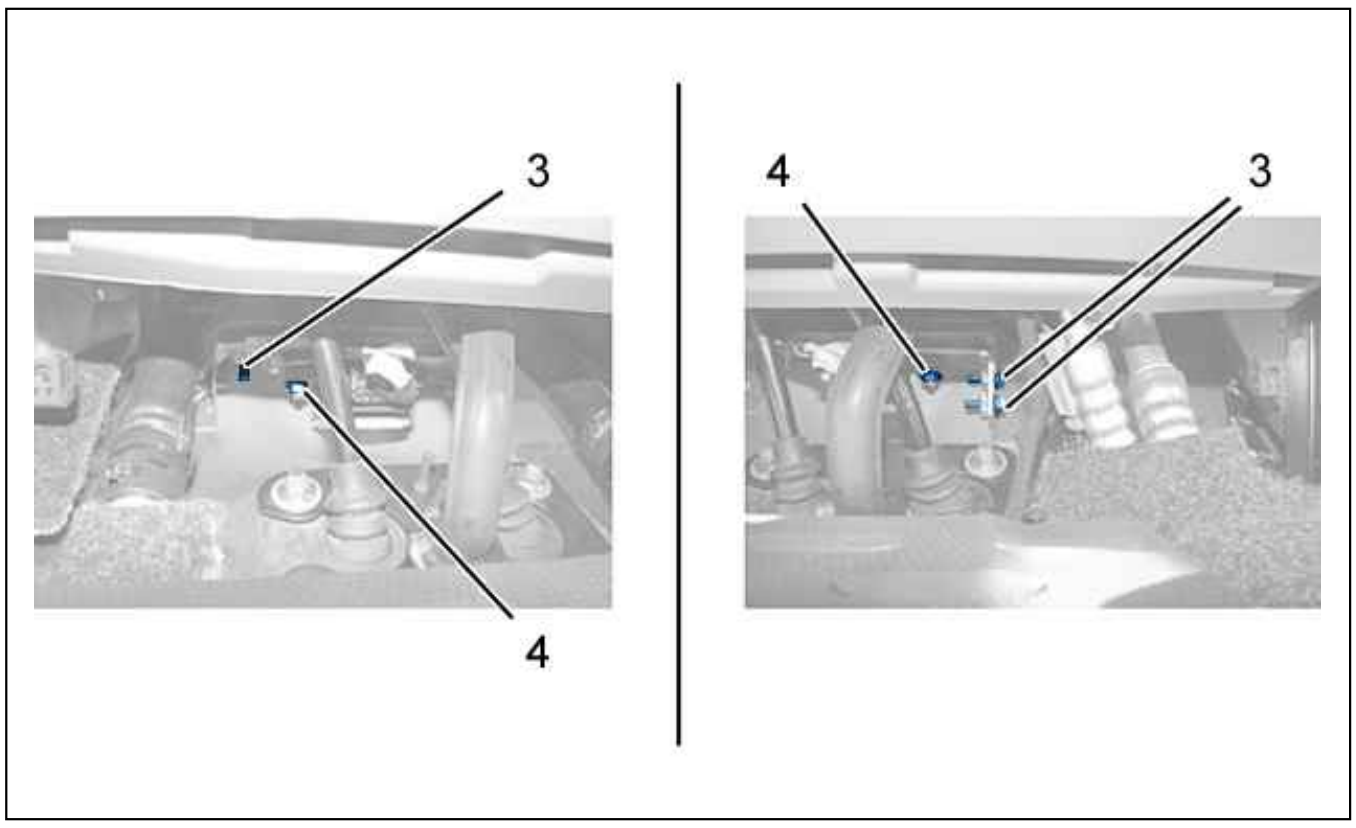

Figure : B3FG29GD

Remove :

- The 2 nuts (4) (Gyrometer-accelerometer sensor (1))
- The 3 bolts (3) (Gyrometer/accelerometer sensor holder)

Disconnect the connector .
Remove the gyrometer/accelerometer sensor (1).

4. Refitting

CAUTION : Any gyrometer/accelerometer sensor (1) that has suffered an impact must be replaced.

N.B. : Respect the direction of fitting of the gyrometer sensor /accelerometer (1) : Connector towards the rear of the vehicle.

CAUTION : Adhere to the tightening torques .

Refit :

- The gyrometer/accelerometer (1) to its holder
- The 2 nuts (4) (Gyrometer-accelerometer sensor (1))
- The 3 bolts (3) (Gyrometer/accelerometer sensor holder)

Reconnect the connector .

CAUTION : Perform the operations to be carried out following reconnection of the battery.

Reconnect the battery.
Using a diagnostic tool :

- Calibrate the gyrometer/accelerometer sensor
- Read and clear the fault codes

Refit the cover (2).

REMOVING - REFITTING : VACUUM SENSOR

WITH STOP AND START STARTER

ESSENTIAL : Observe the safety and cleanliness instructions .

1. Removing

Disconnect the ancillaries battery negative cable.

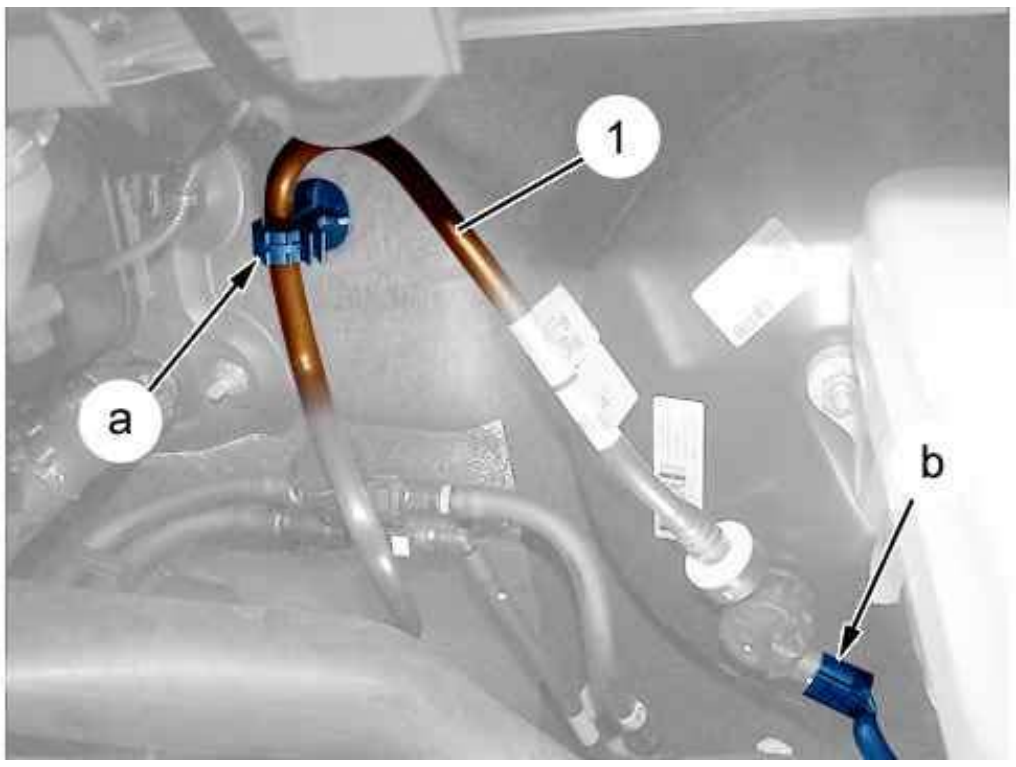

Figure : B3FG2DRD

Disconnect the connector (at "b").
Release the vacuum pipe (1) (at "a").

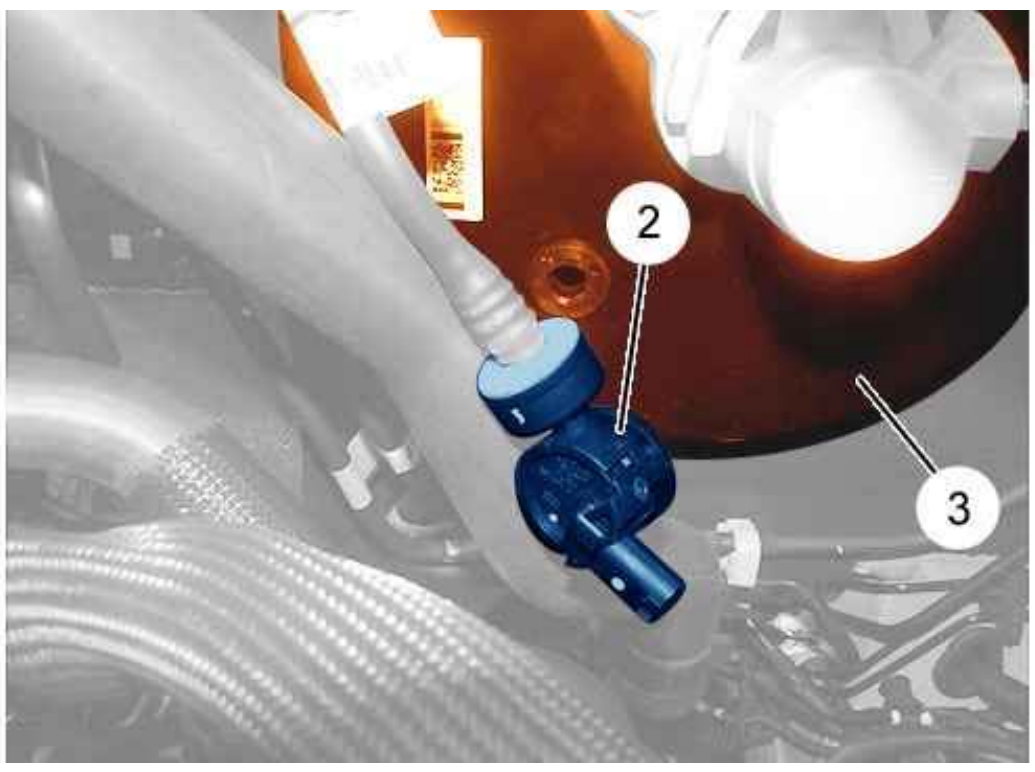

Figure : B3FG2DSD

Uncouple the vacuum sensor (2) from the brake servo unit (3).

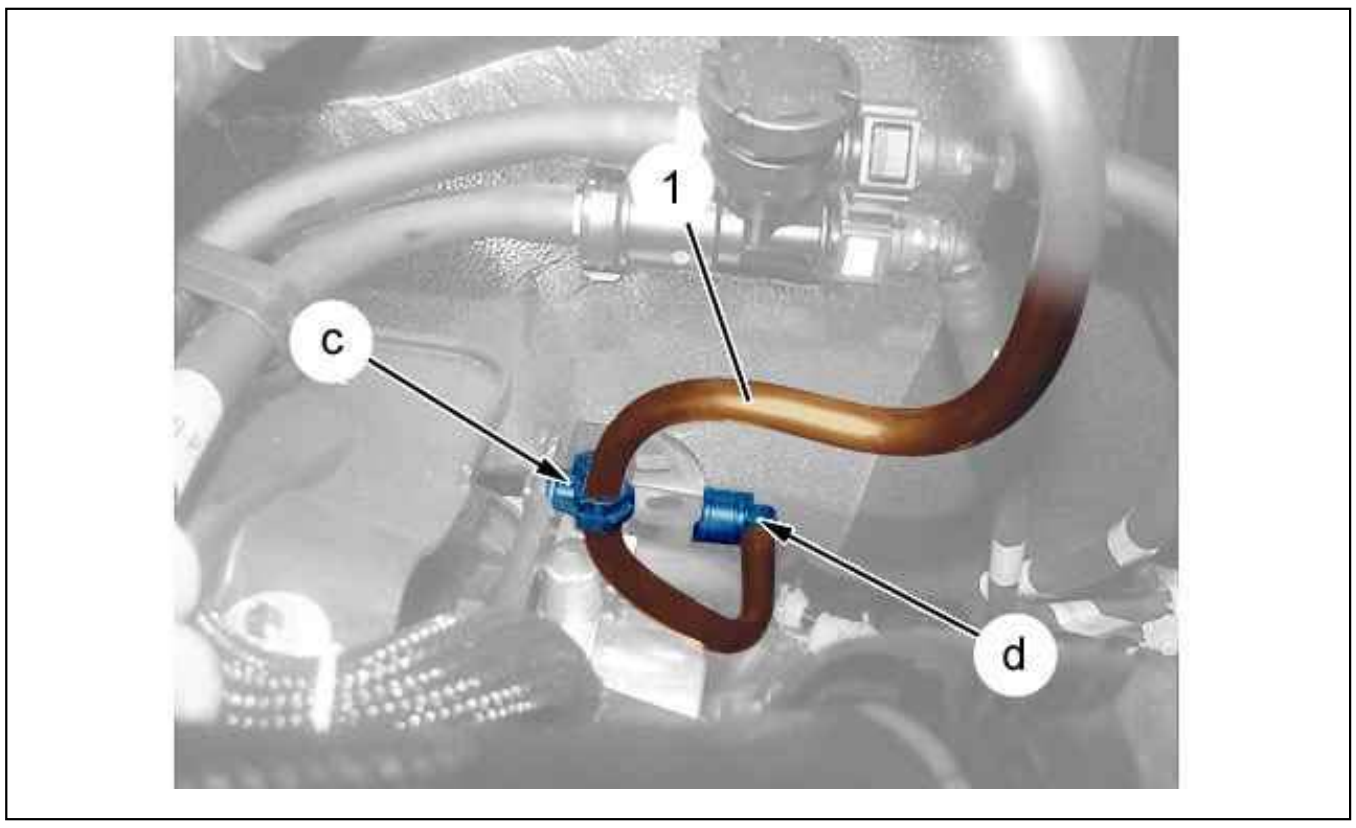

Figure : B3FG2DTD

Release the vacuum pipe (1) (at "c").
Unclip the vacuum pipe (1) (at "d").
Remove the vacuum pipe (1) and vacuum sensor (2) assembly.

2. Refitting

Refit the vacuum pipe (1) and vacuum sensor (2) assembly.
Reclip the vacuum pipe (1) (at "d").
Secure the vacuum pipe (1) (at "c").
Couple the vacuum sensor (2) onto the brake servo unit (3).
Secure the vacuum pipe (1) (at "a").
Connect the connector (at "b").

CAUTION : Perform the operations that are required following a reconnection of the ancillaries battery.

Reconnect the ancillaries battery.

REMOVING - REFITTING : FRONT BRAKE DISC

ESSENTIAL : Observe the safety and cleanliness recommendations .

ESSENTIAL : Always replace the brake pads if replacing the discs.

1. Removing

Release the front wheel bolts.
Lift and support the vehicle with front wheels suspended.
Remove :

- The front wheels
- The brake pads (see the relevant operation)

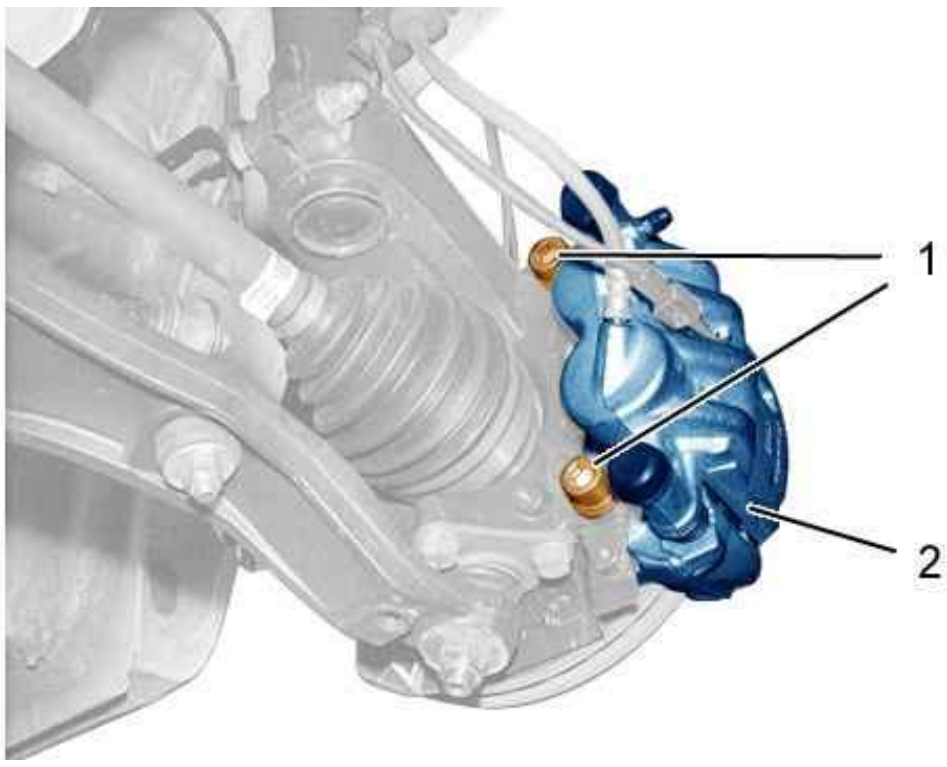

Figure : B3FG242D

Remove the bolts (1).
Disengage the brake caliper (2).
Leave the caliper hanging (2).

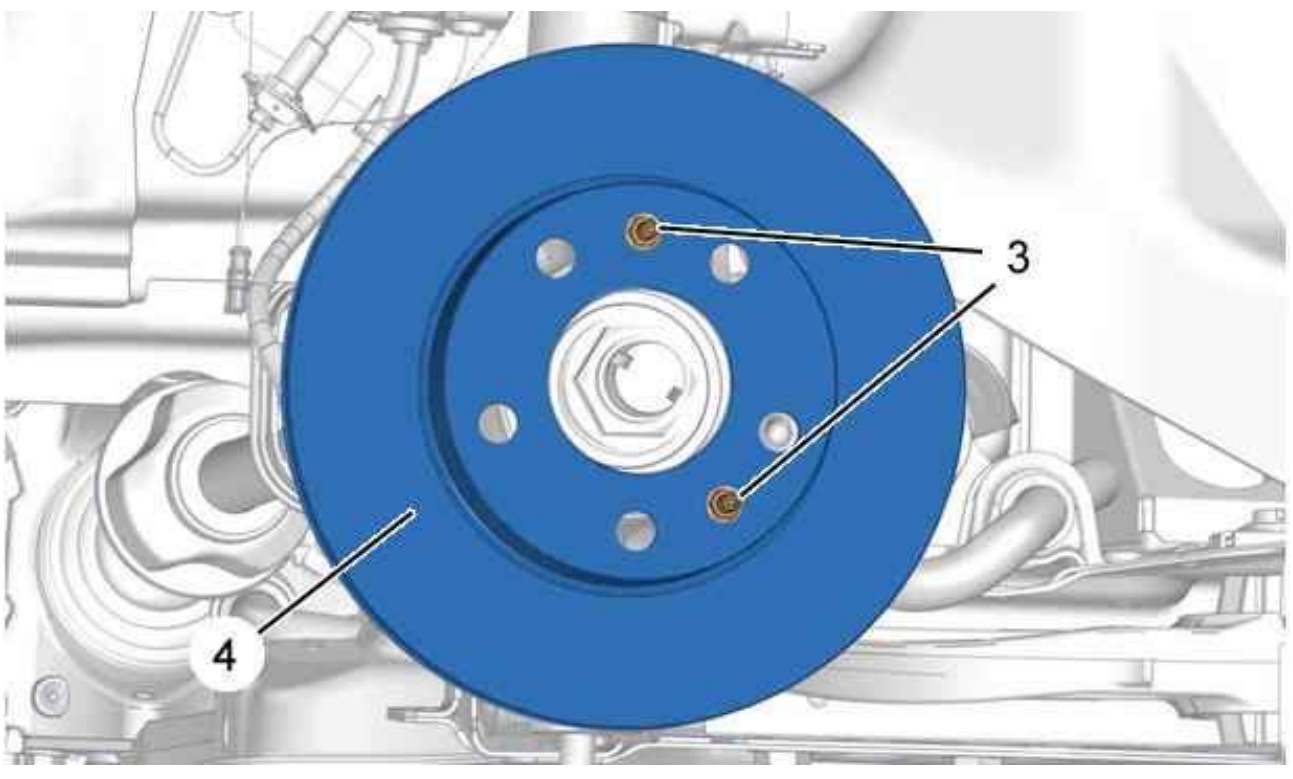

Figure : B3FG243D

Remove :

- The bolts (3)
- The brake disc (4)

2. Cleaning

ESSENTIAL : Do not use compressed air to clean the brakes.

2.1. 1st possibility

Clean the brake disc (4) and the brake caliper (2) ; With a recommended brake cleaning product.
Allow to dry and to drain.

Wipe ; Using a paper cloth.

2.2. 2nd possibility

Use an approved dedusting instrument (see tools and equipment catalogue).
Visually check :

- Around the pistons for leak
- That the protective gaiters are in good condition and correctly adjusted
- The wear of the brake disc (4)

Check the operation of the brake caliper (2).

3. Refitting

CAUTION : Adhere to the tightening torques .

Refit :

- The brake disc (4)
- The bolts (3)

Tighten the bolts (3).
Position the brake caliper (2).
Refit the bolts (1) (new) (pre-coated with a thread locking product).
Tighten the bolts (1).
Refit :

- The brake pads (see the relevant operation)
- The front wheels

Return the vehicle to its wheels.

Tighten the wheel bolts .

REMOVING - REFITTING : FRONT BRAKE PADS

ESSENTIAL : Observe the safety and cleanliness recommendations .

1. Tooling

Pliers FACOM D60A.

2. Removing

Untighten the wheel screws (front).
Lift and support the front of the vehicle.
Remove the front wheels.

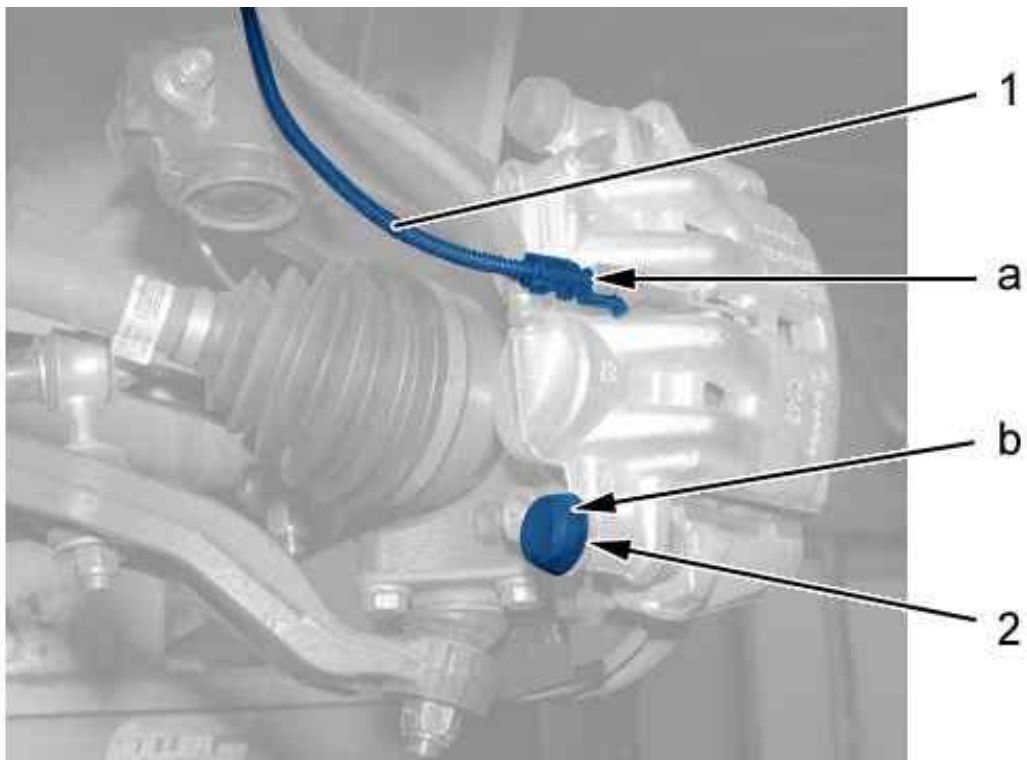

Figure : B3FP7JKD

Disconnect the electrical harness (1) (Brake pads worn warning light) (at "a").
Remove :

- The rubber gaiter (at "b")
- The pillar screw (2)

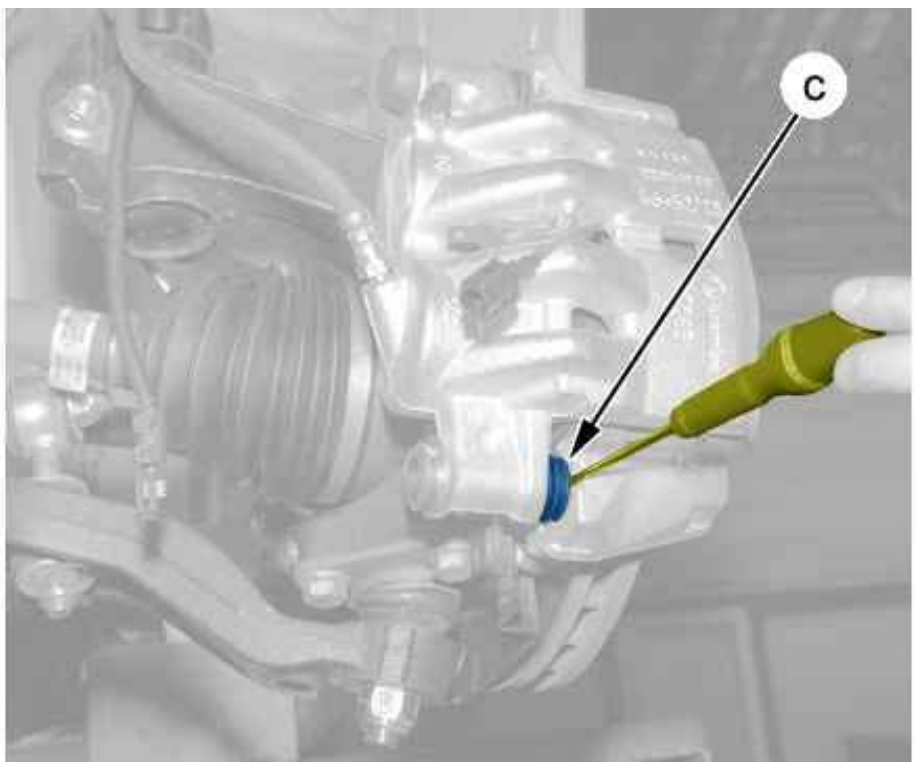

Figure : B3FP7JLD

Push back the stud (as "c") ; By means of a screwdriver.

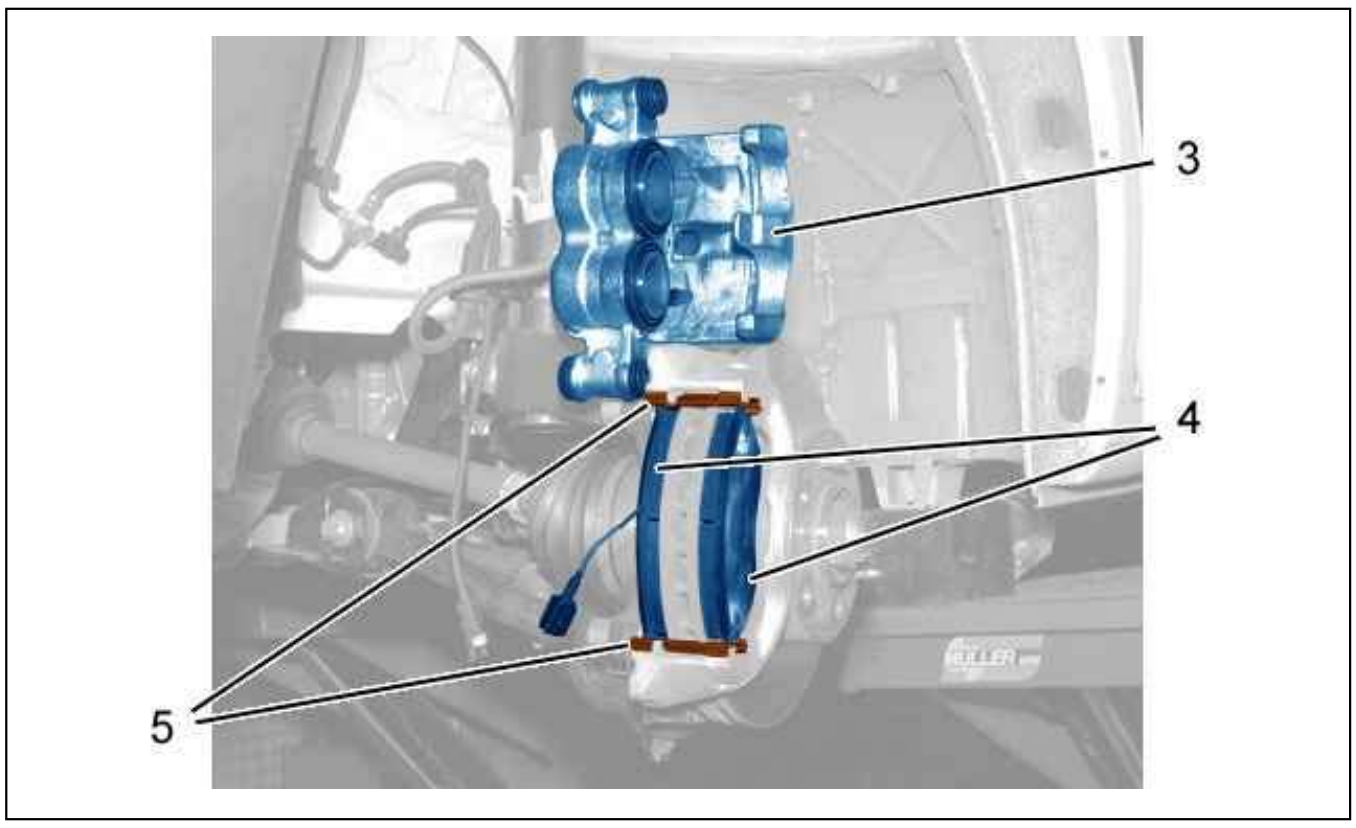

Figure : B3FP7JMD

Tilt the brake caliper (3).
Remove :

- The brake pads (4)
- The springs (5)

Push the pistons back ; Using FACOM D60A pliers.

CAUTION : Check the brake fluid level.

3. Cleaning

ESSENTIAL : Do not use compressed air to clean the brakes.

3.1. 1st possibility

Clean the brake disc and caliper (3) ; With a recommended brake cleaning product.
Allow to dry and to drain.
Wipe ; Using a paper cloth.

3.2. 2nd possibility

Use an approved dedusting instrument (see tools and equipment catalogue).
Visually check :

- Around the pistons for leak
- That the protective gaiters are in good condition and correctly adjusted
- The disc for wear

Check the sliding of the brake caliper studs (3).

4. Refitting

CAUTION : Adhere to the tightening torques .

Check the condition of the stud gaiters.
Refit :

- The springs (5)
- The brake pads (4)

Fold back the brake caliper (3).
Refit : The new stud (2) (Pre-coated with a thread-locking product).
Tighten : The pillar screw (2).
Replace the rubber protector (at "b").
Connect the electric harness (1) (Brake pads worn warning light) (at "a").

CAUTION : Apply the brakes, with the engine running, several times before driving the vehicle.

Check the operation of the brakes.
Check the brake fluid level and top up if necessary.
Fit the wheels.
Return the vehicle to its wheels.
Tighten the wheel bolts .

REMOVING - REFITTING : PARKING BRAKE CABLES

ESSENTIAL : Observe the safety and cleanliness recommendations .

1. Preliminary operation

Place the vehicle on a two-post lift.
Disconnect the battery.

2. Handbrake primary cable

2.1. Removing

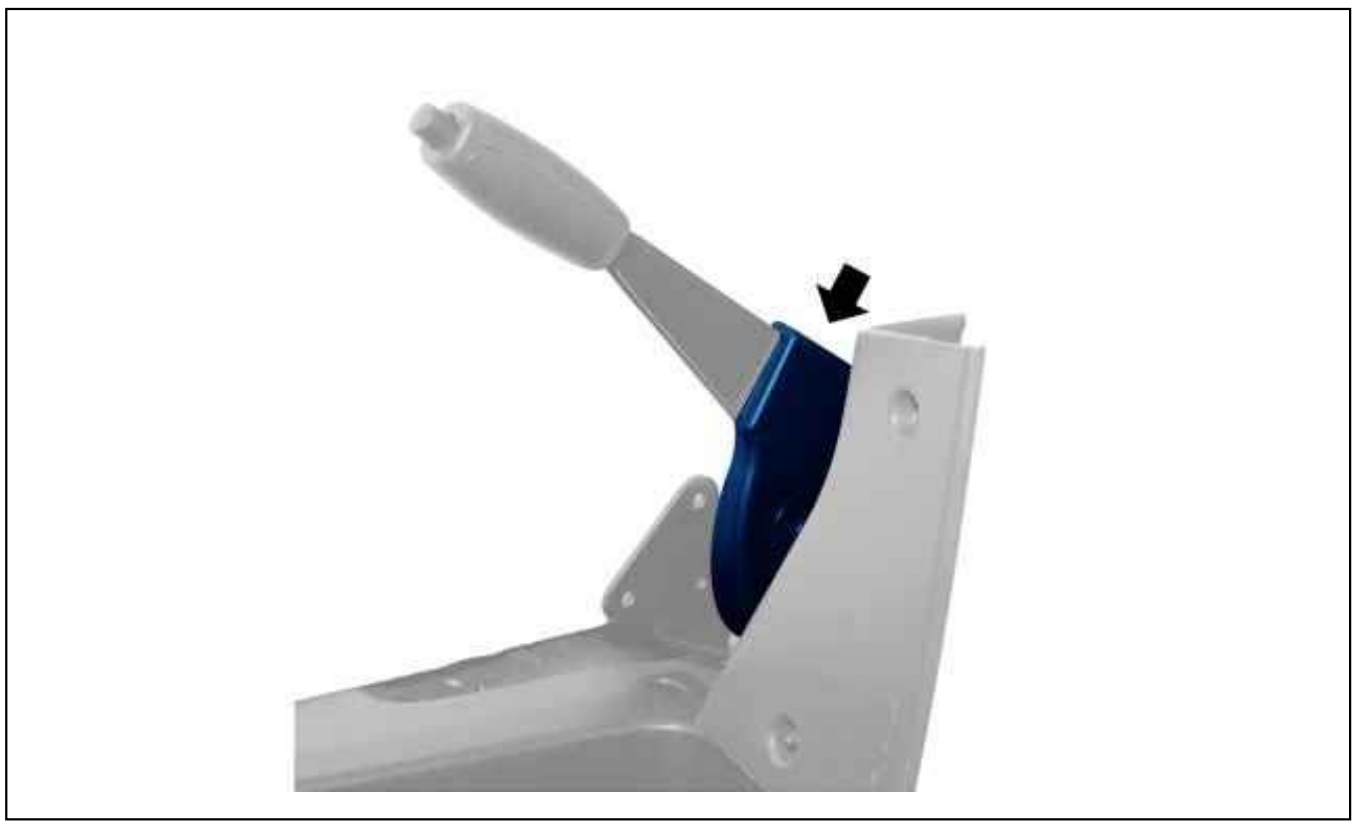

Figure : B3FP7JND

Remove the handbrake control lever trim .

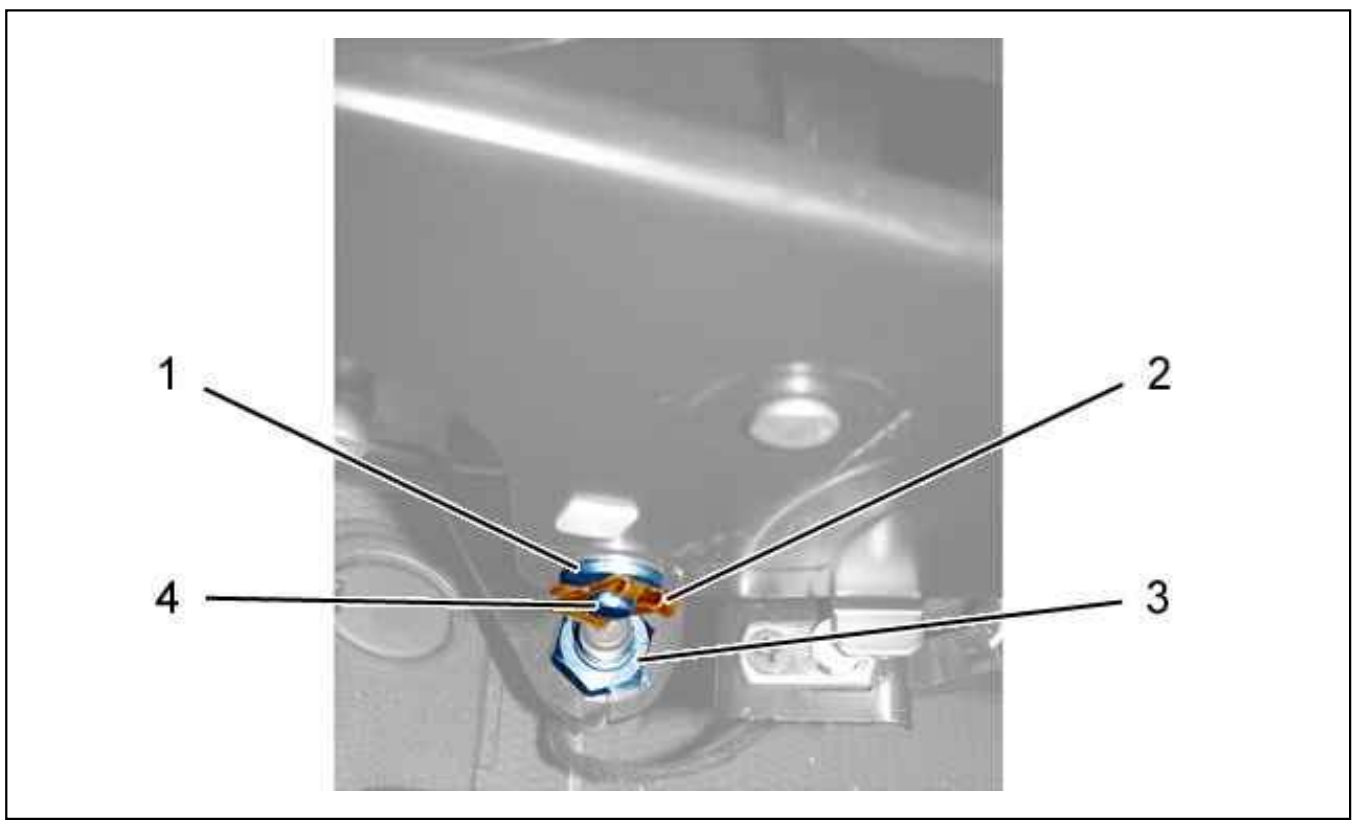

Figure : B3FG1YUD

Remove :

- Locking clip (2)
- The washer (1)
- The shaft (4)

Unscrew nut (3).
Atach the cable yoke with a thin thread.

N.B. : This is necessary to facilitate the fitment of the new cable.

Move both the yoke and nut (3) away from the base of the control lever.

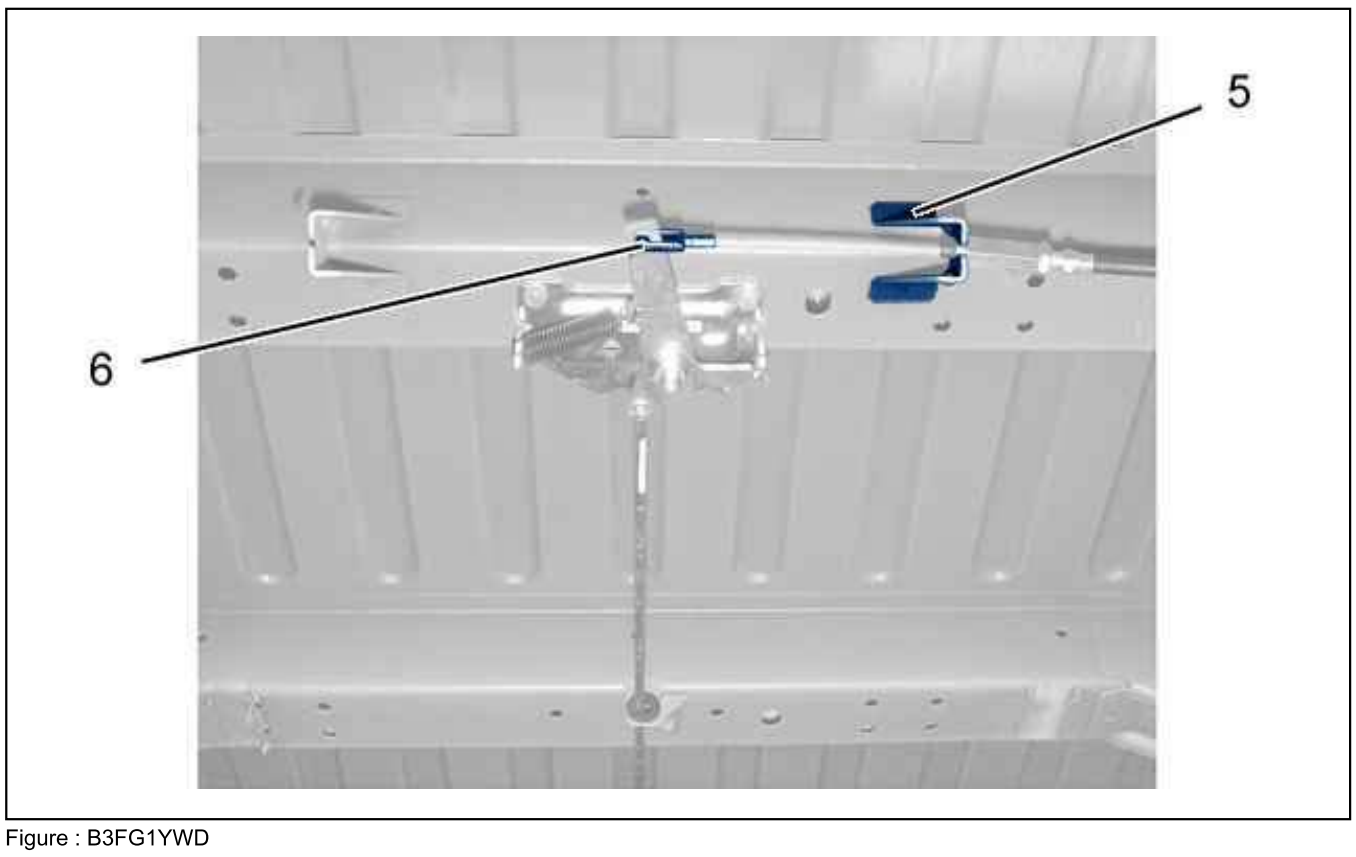

Figure : B3FG1YWD

Disengage the sheath from retaining base (5).
Uncouple yoke (6) from the balance lever.

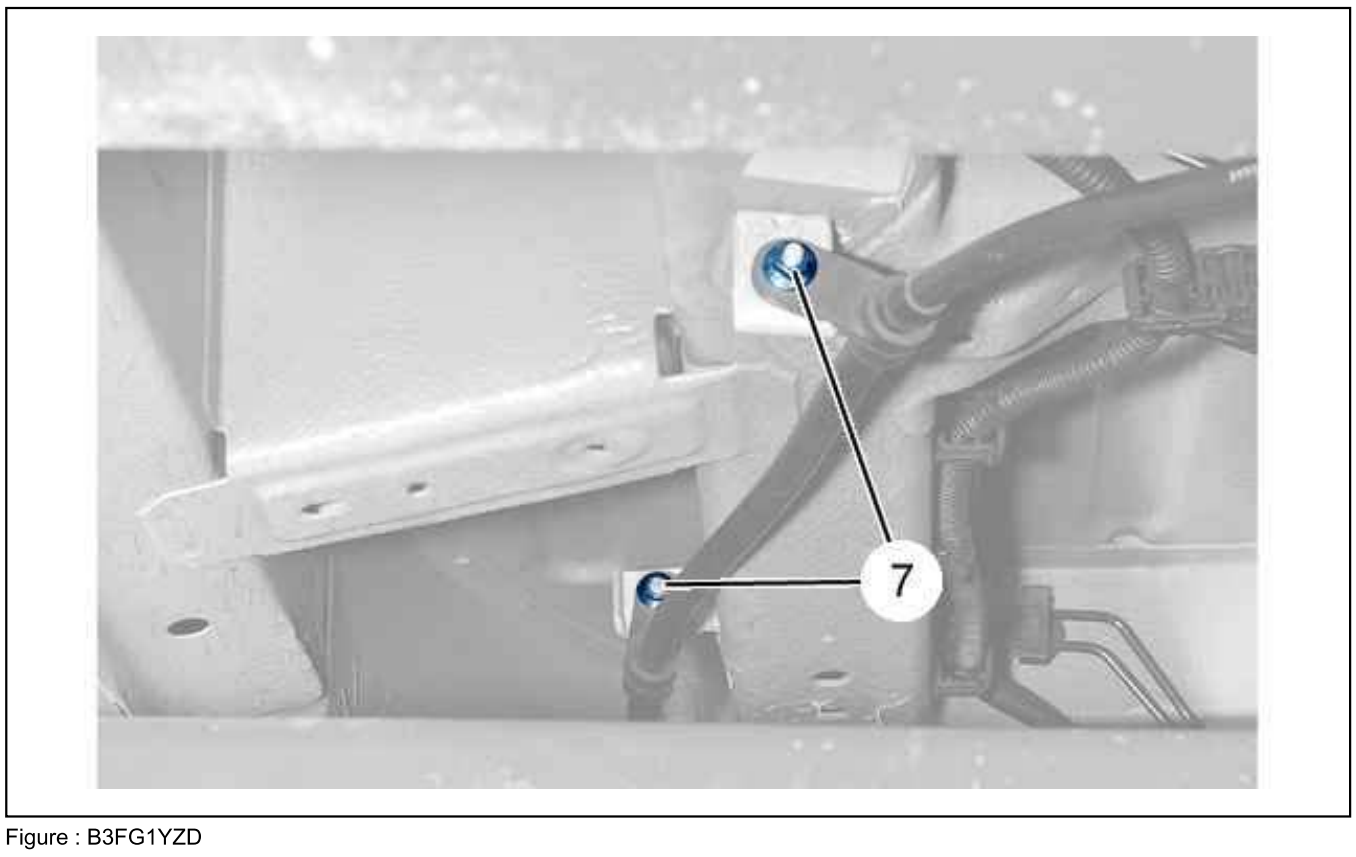

Figure : B3FG1YZD

Remove the nuts (7).
Remove the cable from under the vehicle, taking care not to cut off the thread during the operation.
As soon as the cable is entirely disengaged from the bodyshell, detach the thread from the yoke.

2.2. Refitting

CAUTION : Adhere to the tightening torques .

N.B. : Use the thin thread, utilised during the removal, to put the new cable into place more easily.

Secure the free extremity of the thread to the cable yoke.
Pull the thread moderately, seeing to it that the cable engages easily.
Fit the nuts (7).
Engage : The sheath in the retaining base (5).
Couple the brake cable on the yoke (6).
Refit the nut (3).
Engage the cable in the handbrake lever .
Refit :

- The shaft (4)
- The washer (1)
- Locking clip (2)
- The handbrake control lever trim

3. Handbrake secondary cables

3.1. Removing

Unscrew the rear wheels.
Raise the vehicle and support on axle stands, wheels free.
Remove :

- The rear wheels
- The rear brake discs

- The rear hub bearings
- The parking brake shoes (on each side)

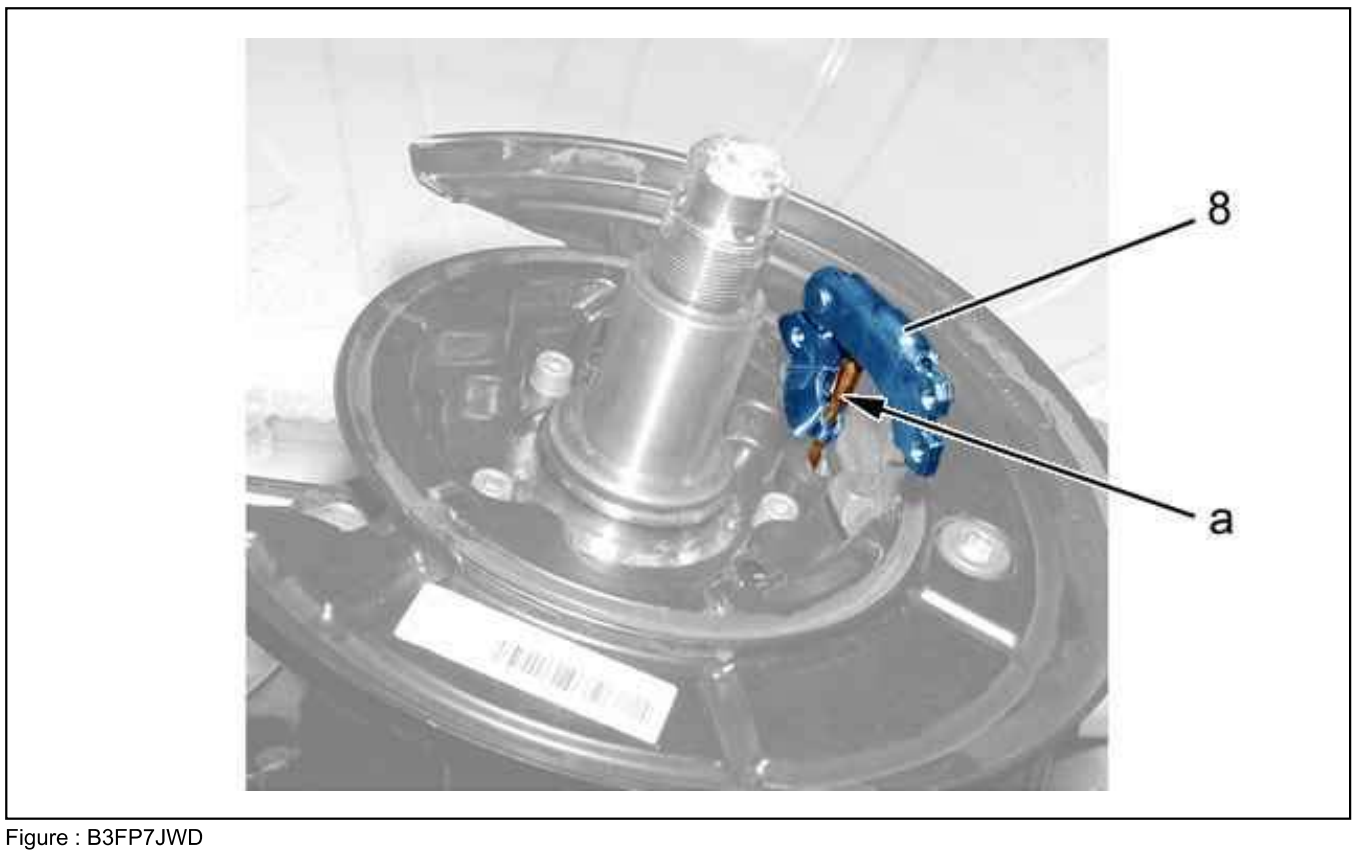

Figure : B3FP7JWD

each side :

- Disconnect the cable from the lever (8) (at "a")
- Remove : The lever (8)
- Uncouple the sheath from the support on the suspension blade

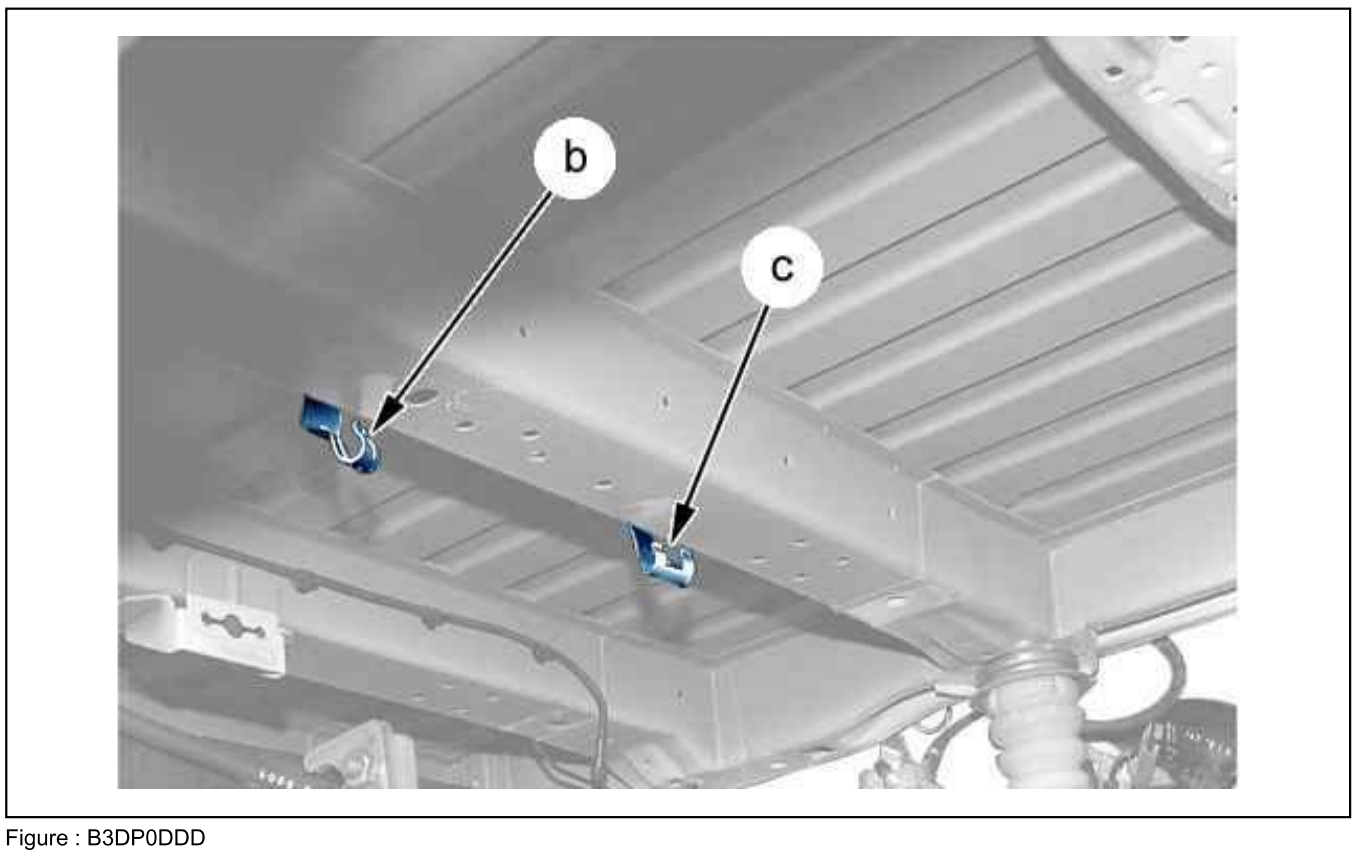

Figure : B3DP0DDD

Unclip : The handbrake sheaths on the bodyshell (at "b", "c").

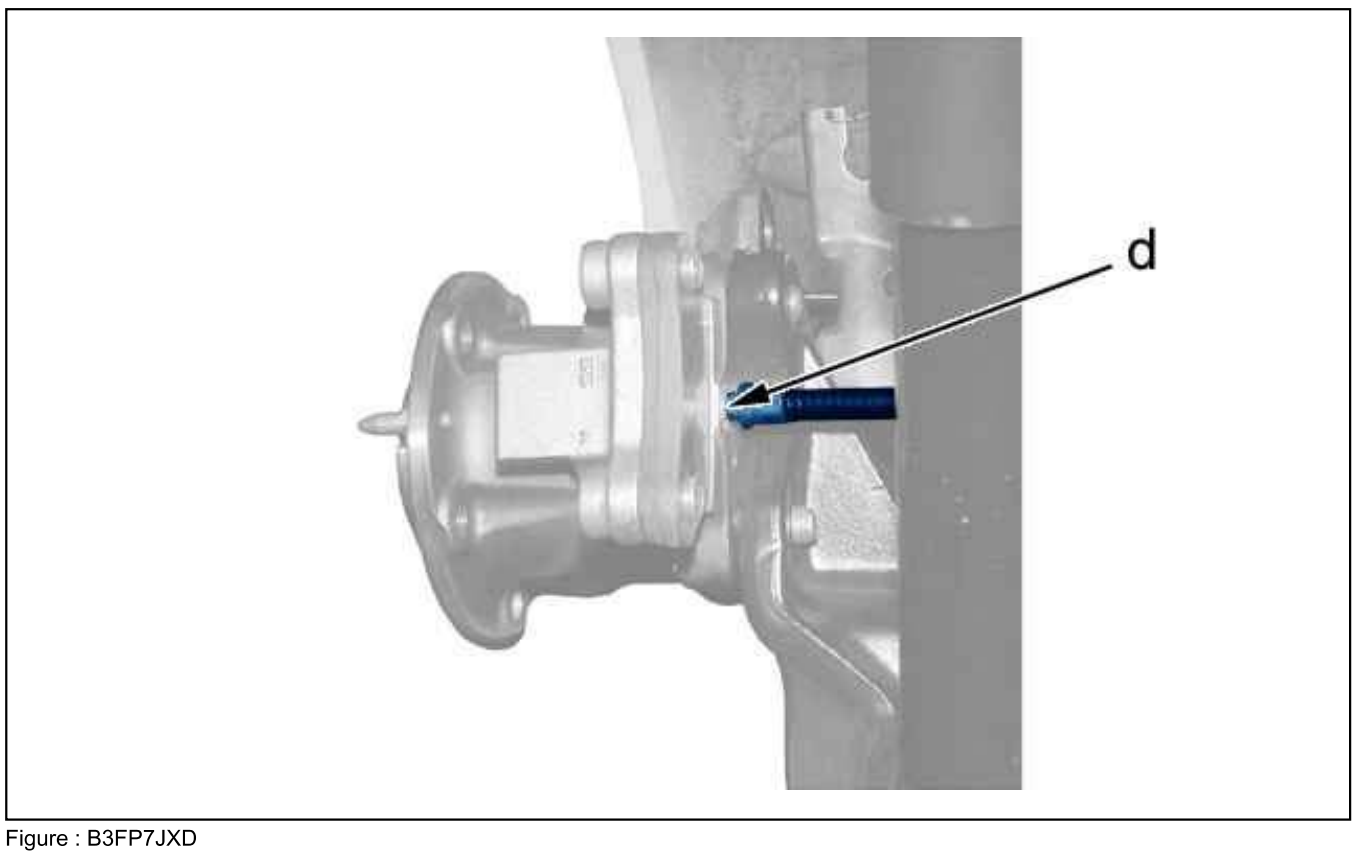

Figure : B3FP7JXD

Unclip then detach the cable sleeve (at "d").

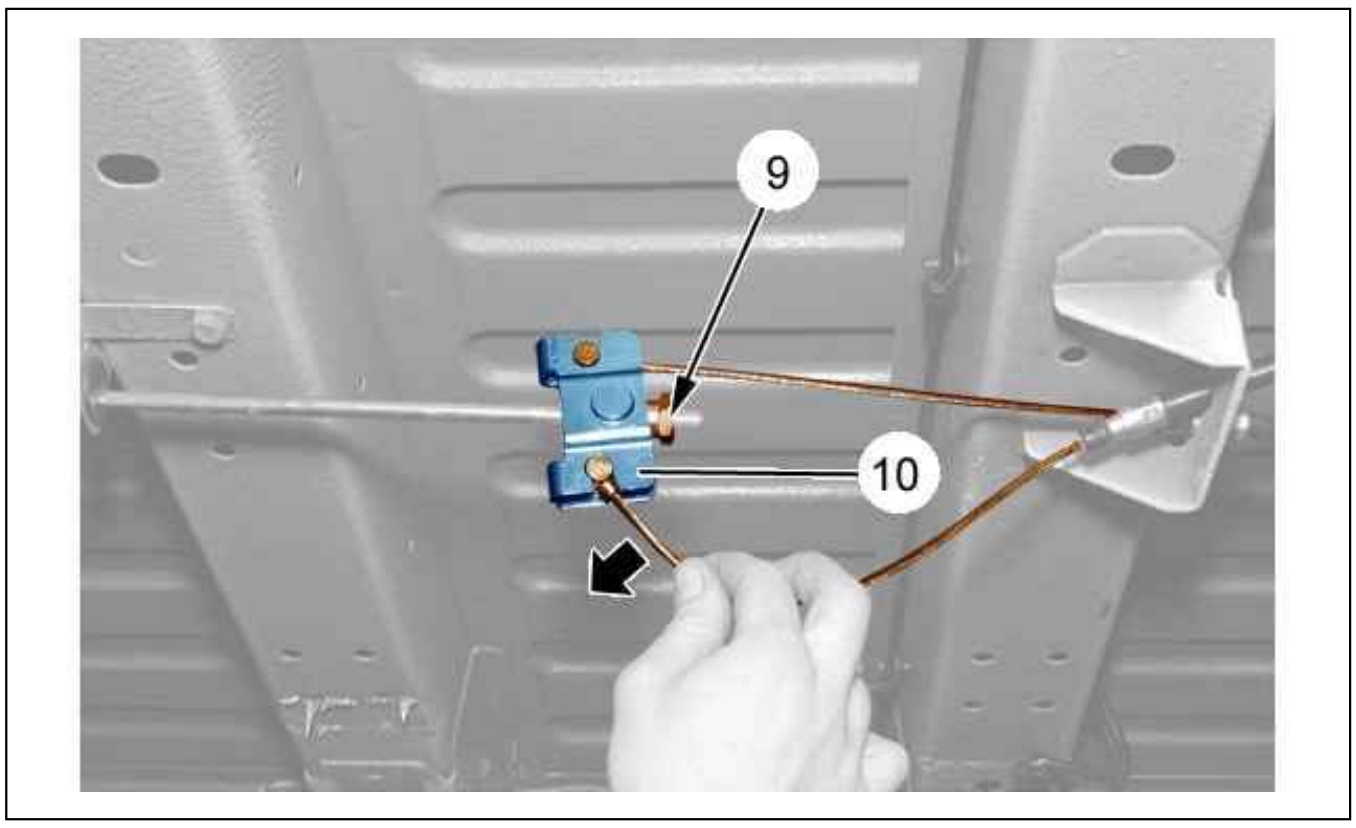

Figure : B3FP7JYD

Unscrew nut (9).
Uncouple the handbrake cables from the balance lever (10) (In the direction of the arrow).
Remove : The handbrake secondary cables.

3.2. Refitting

Couple the handbrake cables on the balance lever (10).
Tighten the nut (9).
Clip the sleeve on its bracket (at "d").
Clip : The handbrake sleeves to the body (at "b", "c").
Couple the sleeves to the supports on the suspension blades.
Refit the handbrake control lever (8) (on each side).
Connect the inner cable to the lever (8) (at "a") (on each side).

N.B. : Check that the brake cable is correctly positioned on the braking mechanism.

Refit :

- The parking brake shoes (on each side)
- The rear hub bearings
- The brake discs

Adjust the parking brake .
Refit the rear wheels.
Return the vehicle to its wheels.
Tighten the wheel bolts .

4. Common operations

CAUTION : Perform the operations to be carried out following reconnection of the battery.

Reconnect the battery.

REMOVING - REFITTING : REAR BRAKE PADS

ESSENTIAL : Observe the safety and cleanliness recommendations .

1. Tooling

Pliers FACOM D60A.

2. Removing

Untighten the rear wheel bolts.
Raise and support the vehicle, with the rear wheels hanging free.
Remove the rear wheels.

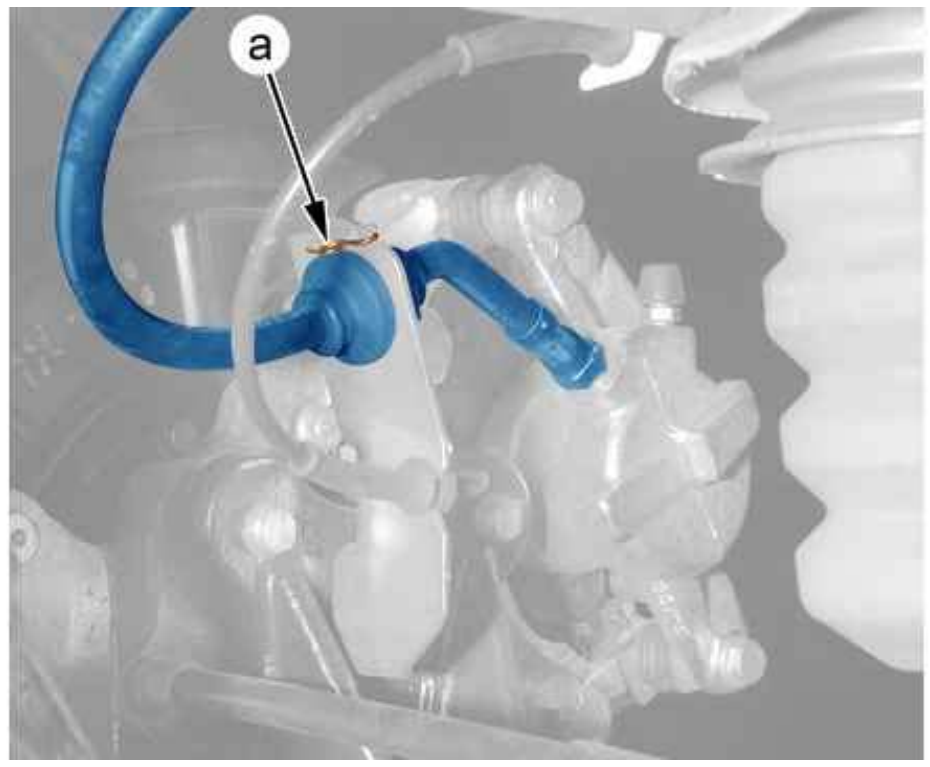

Figure : B3FP7JZD

Unclip the brake hose (at "a").
Move aside the brake hose from its support.

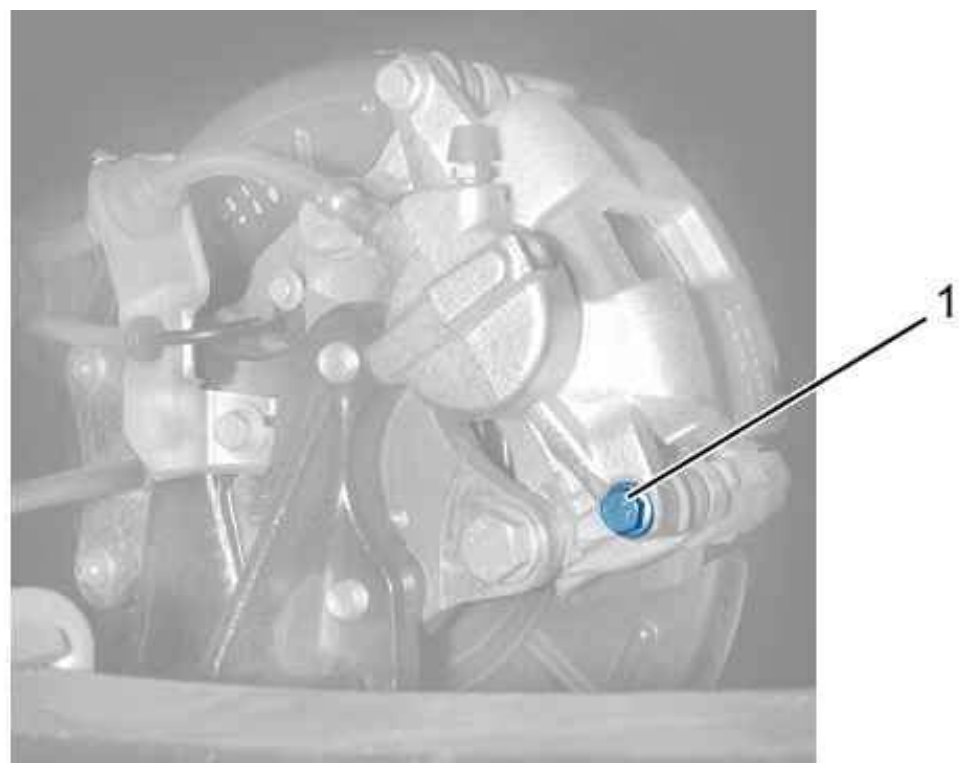

Figure : B3FP7K0D

Remove the bolt (1).

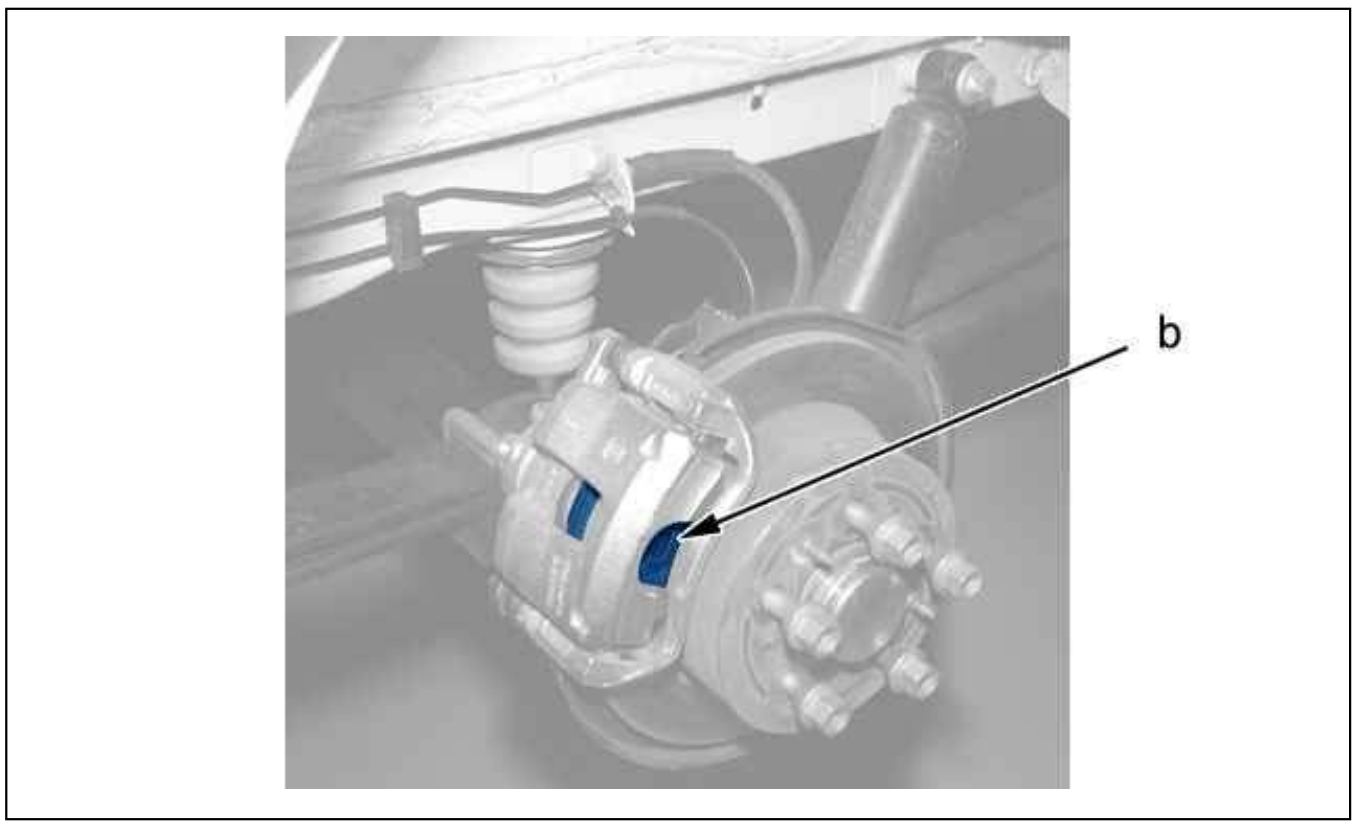

Figure : B3FP7K1D

Push the piston back (levering at b).

CAUTION : Check the brake fluid level.

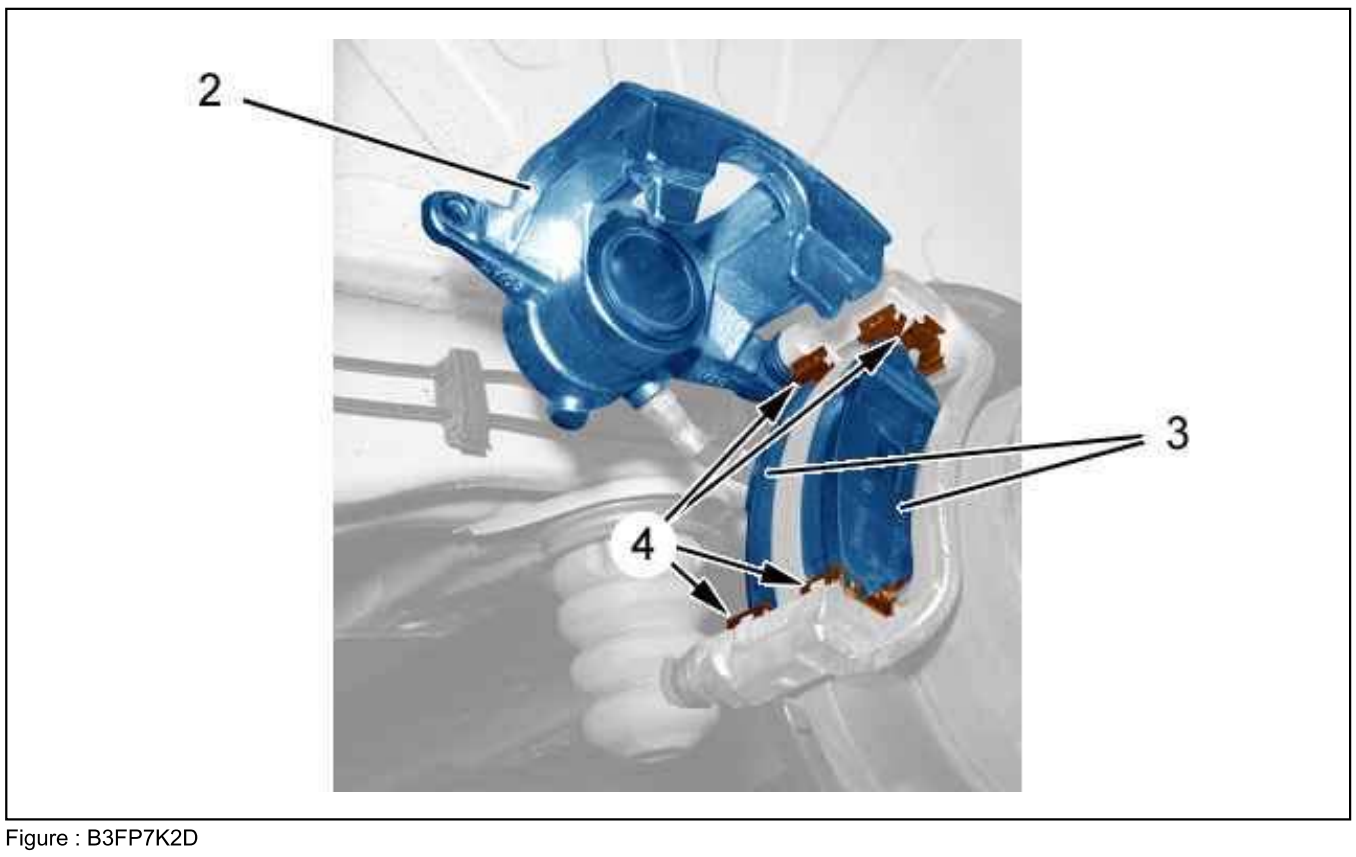

Figure : B3FP7K2D

Tilt the brake caliper (2).
Remove :

- The brake pads (3)
- The springs (4)

Push the pistons back ; Using FACOM D60A pliers.

CAUTION : Check the brake fluid level.

3. Cleaning

ESSENTIAL : Do not use compressed air to clean the brakes.

3.1. 1st possibility

Clean the brake disc and caliper (2) ; With a recommended brake cleaning product.
Allow to dry and to drain.
Wipe ; Using a paper cloth.

3.2. 2nd possibility

Use an approved dedusting instrument (see tools and equipment catalogue).
Visually check :

- Around the pistons for leak
- That the protective gaiters are in good condition and correctly adjusted
- The disc for wear

Ensure that the caliper slides correctly.

4. Refitting

CAUTION : Adhere to the tightening torques .

Refit :

- The springs (4)
- The brake pads (3)

Fold back the brake caliper (2).
Refit bolt (1) (new) (Pre-coated with a thread-locking product).
Tighten the bolt (1).
Position the brake hose on its support.
Apply the brakes, with the engine running, several times before driving the vehicle.
Check the operation of the brakes.
Check the brake fluid level and top up if necessary.
Fit the wheels.
Return the vehicle to its wheels.
Tighten the wheel bolts .

REMOVING - REFITTING : REAR BRAKE CALIPER

ESSENTIAL : Observe the safety and cleanliness recommendations .

1. Removing

Untighten the rear wheel bolts.
Raise and support the vehicle, with the rear wheels hanging free.
Remove the rear wheels.

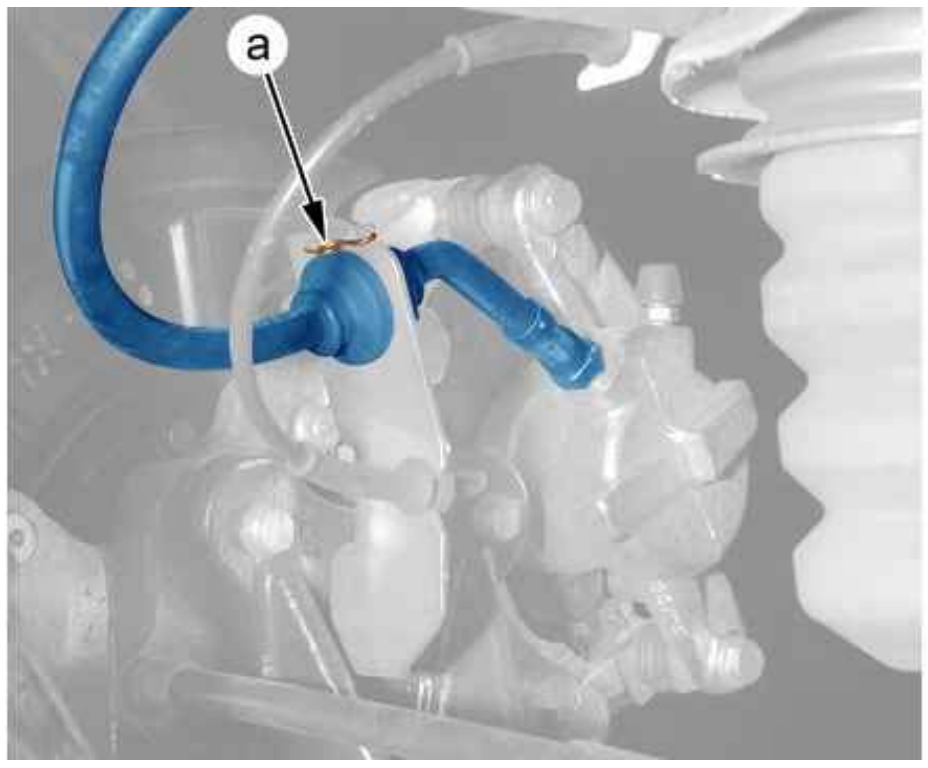

Figure : B3FP7JZD

Unclip the brake hose (at "a").
Move aside the brake hose from its support.

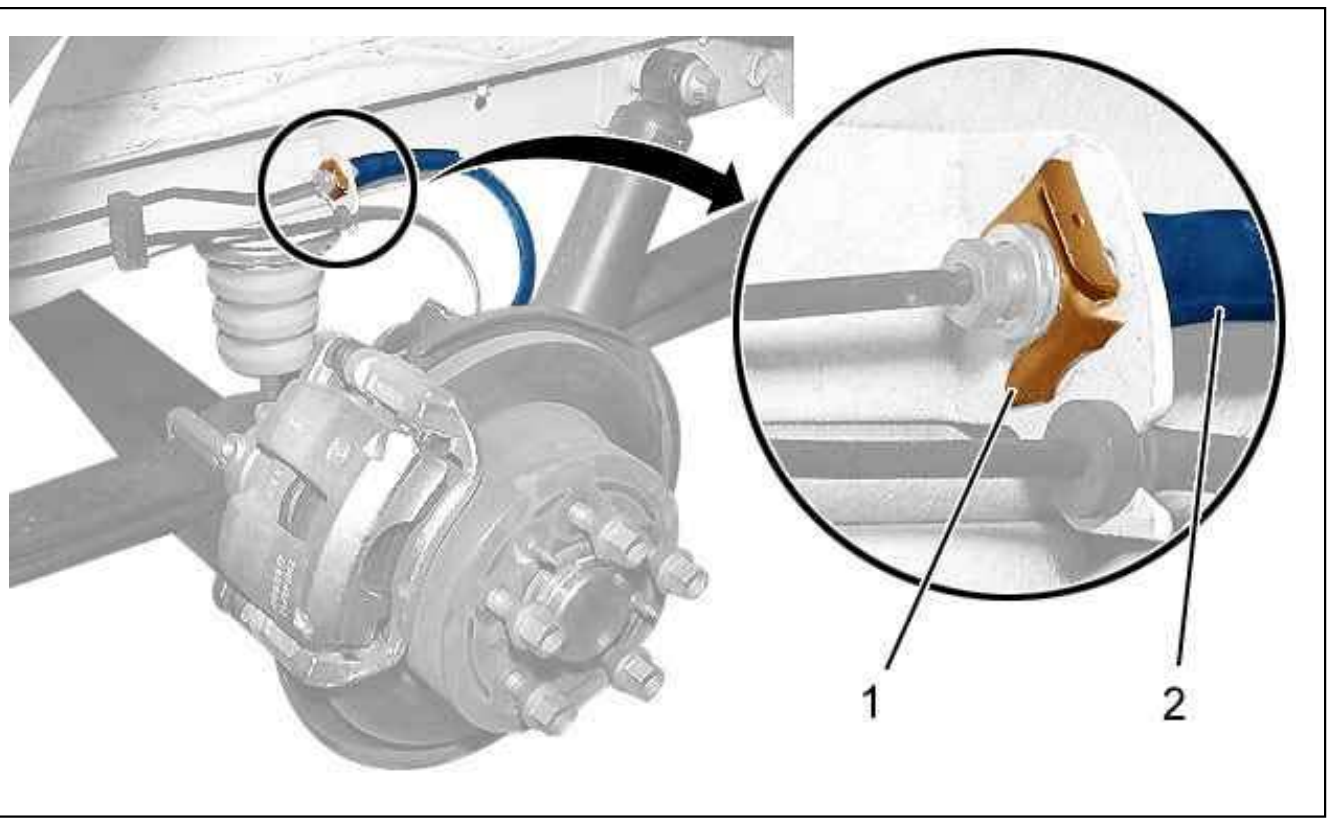

Figure : B3FG245D

Remove the clip (1).
Uncouple the flexible union (2) from the rigid brake piping.
Plug this pipe.

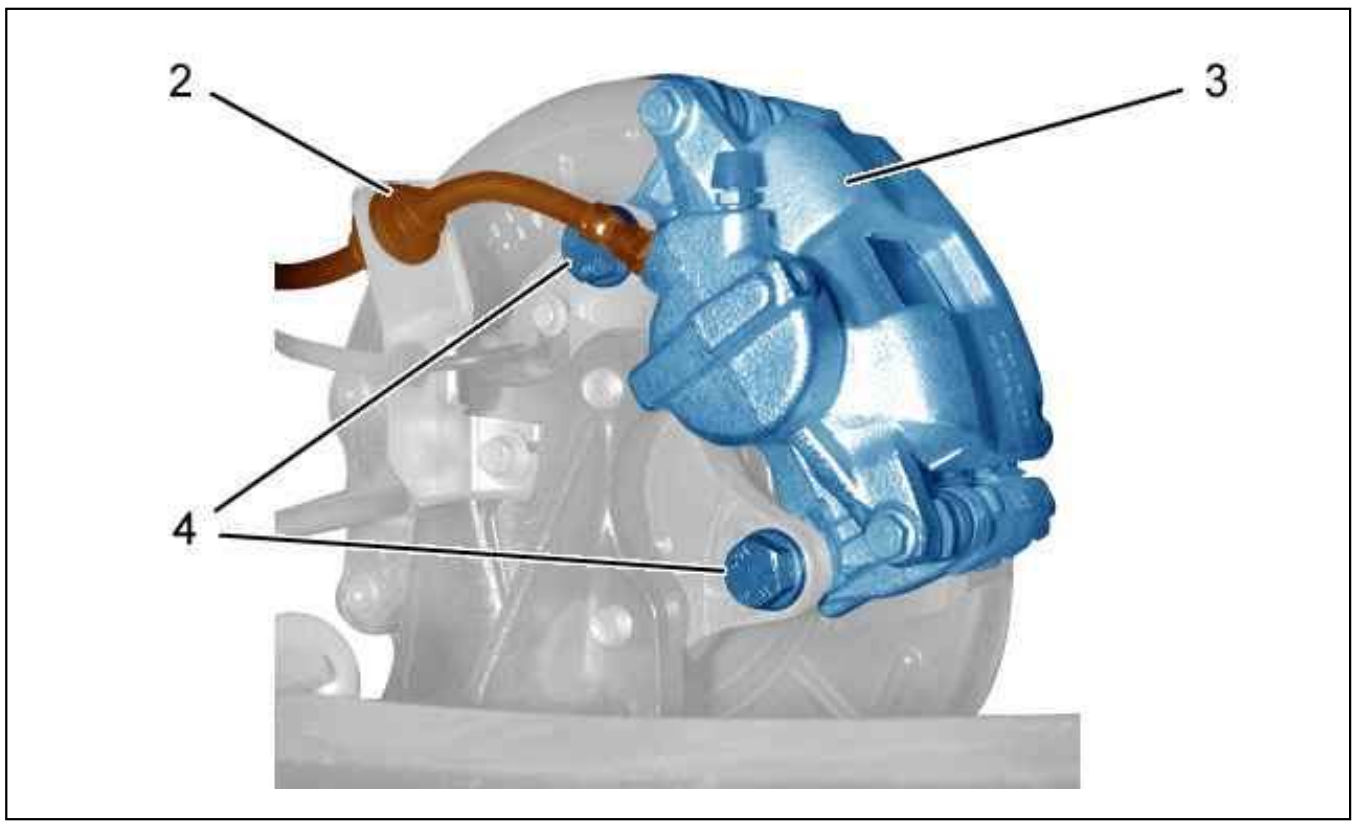

Figure : B3FG246D

Disconnect the hose union (2) from the brake caliper (3).
Close : The brake caliper (3).
Remove :

- The rear brake pads (see the relevant operation)
- The bolts (4)
- The rear brake caliper (3)

2. Cleaning

ESSENTIAL : Do not use compressed air to clean the brakes.

2.1. 1st possibility

Clean the brake disc and the brake caliper (3) ; With a recommended brake cleaning product.
Allow to dry and to drain.
Wipe ; Using a paper cloth.

2.2. 2nd possibility

Use an approved dedusting instrument (see tools and equipment catalogue).
Visually check :

- Around the pistons for leak
- That the protective gaiters are in good condition and correctly adjusted
- The disc for wear

Check the operation of the brake caliper (3).

3. Refitting

CAUTION : Adhere to the tightening torques .

Refit :

- The rear brake caliper (3)
- The bolts (4) (new) (pre-coated with a thread locking product)

Tighten the bolts (4).
Fit the brake pads (see the relevant operation).
Couple the flexible hose (2) on the brake caliper (3).
Position the hose union (2) on its support.
Couple the flexible union (2) to the rigid brake piping.
Refit the clip (1).
Bleed the brake system (see the relevant operation).
Apply the brakes, with the engine running, several times before driving the vehicle.
Check the operation of the brakes.
Fit the wheels.
Return the vehicle to its wheels.
Tighten the wheel bolts .

REMOVING - REFITTING : REAR WHEEL SENSOR

ESSENTIAL : Observe the safety and cleanliness recommendations .

1. Removing

Untighten the rear wheel bolts.
Raise and support the vehicle, with the rear wheels hanging free.

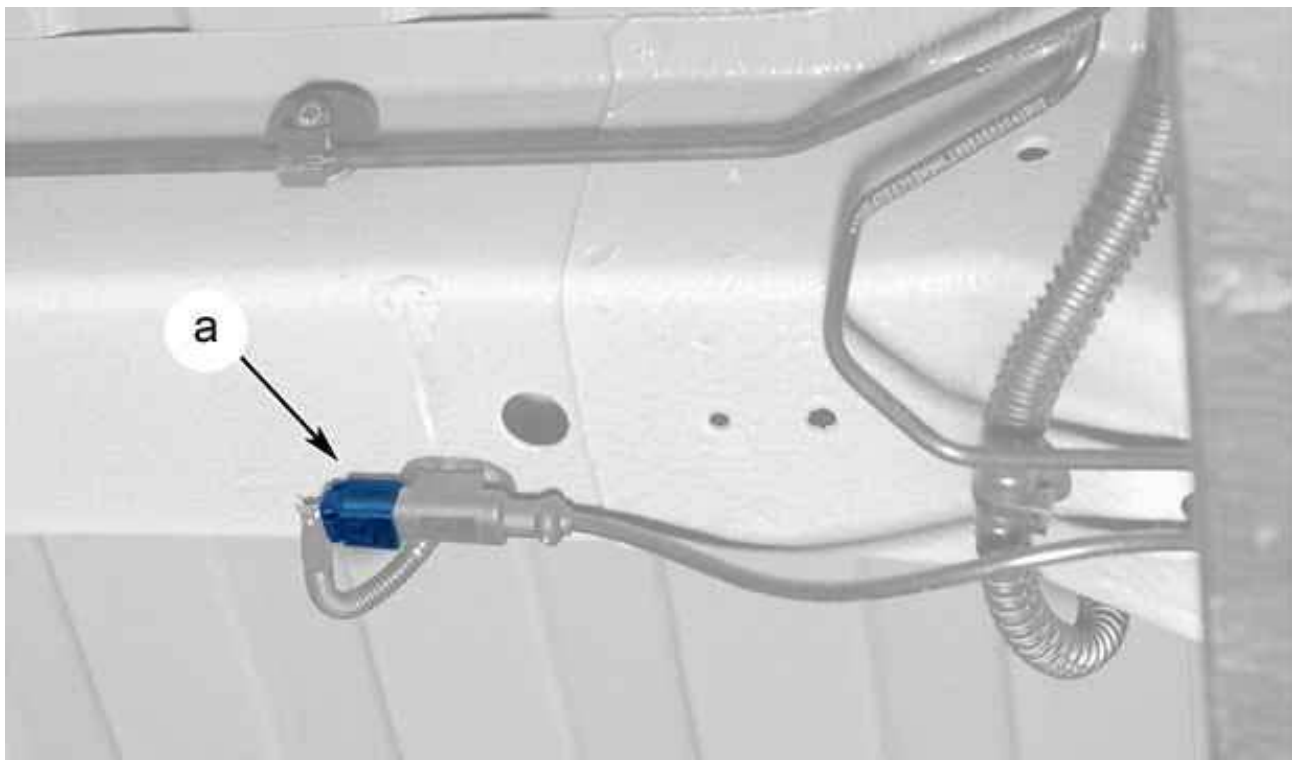

Figure : B3DP0DED

Disconnect the connector (at "a").
Unclip the electrical harness .

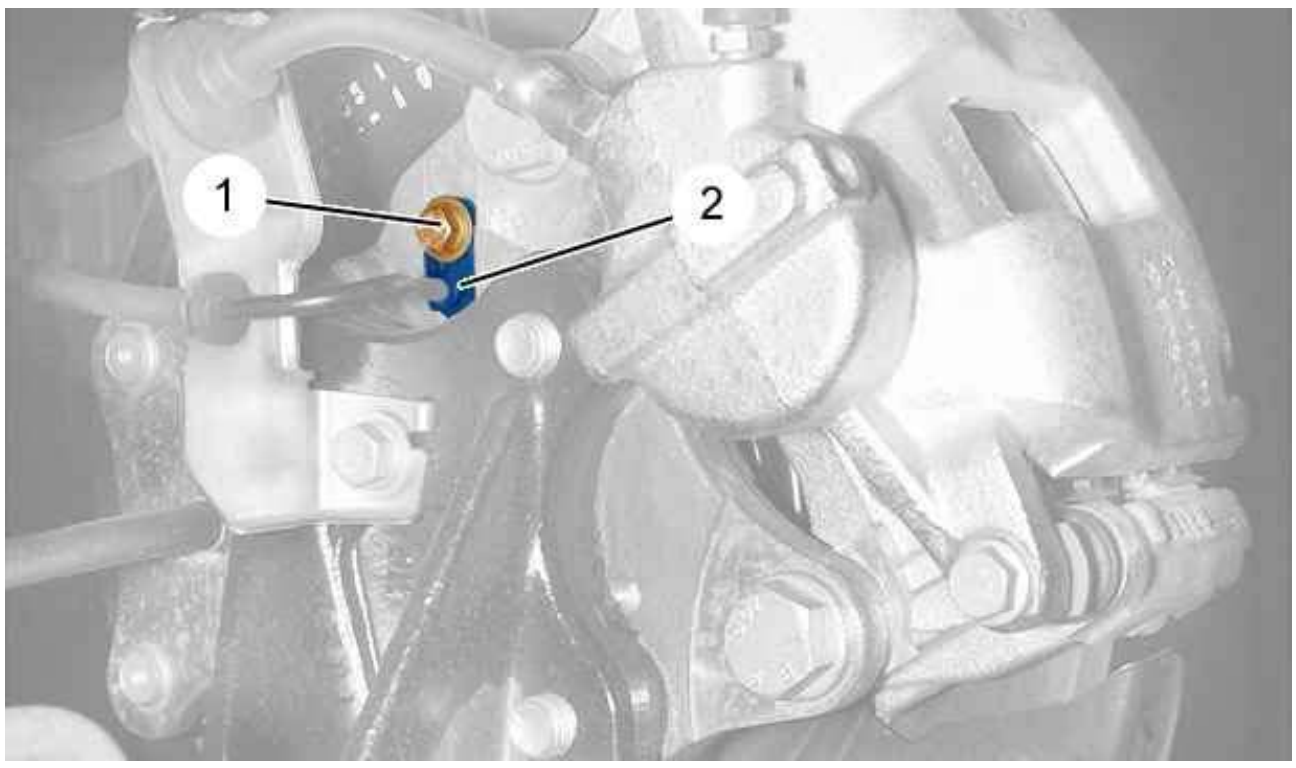

Figure : B3FG240D

Remove :

- The (1) bolt
- The sensor (2)

2. Refitting

CAUTION : Adhere to the tightening torques .

Fit the sensor (2).
Tighten the bolt (1).
Clip the harness.
Reconnect the connector (en "a").
Return the vehicle to its wheels.
Road test.
Read the fault codes.

REMOVING - REFITTING : FRONT WHEEL SENSOR

ESSENTIAL : Observe the safety and cleanliness recommendations .

1. Removing

Release the front wheel bolts.
Lift and support the front of the vehicle.
Remove the front wheels.

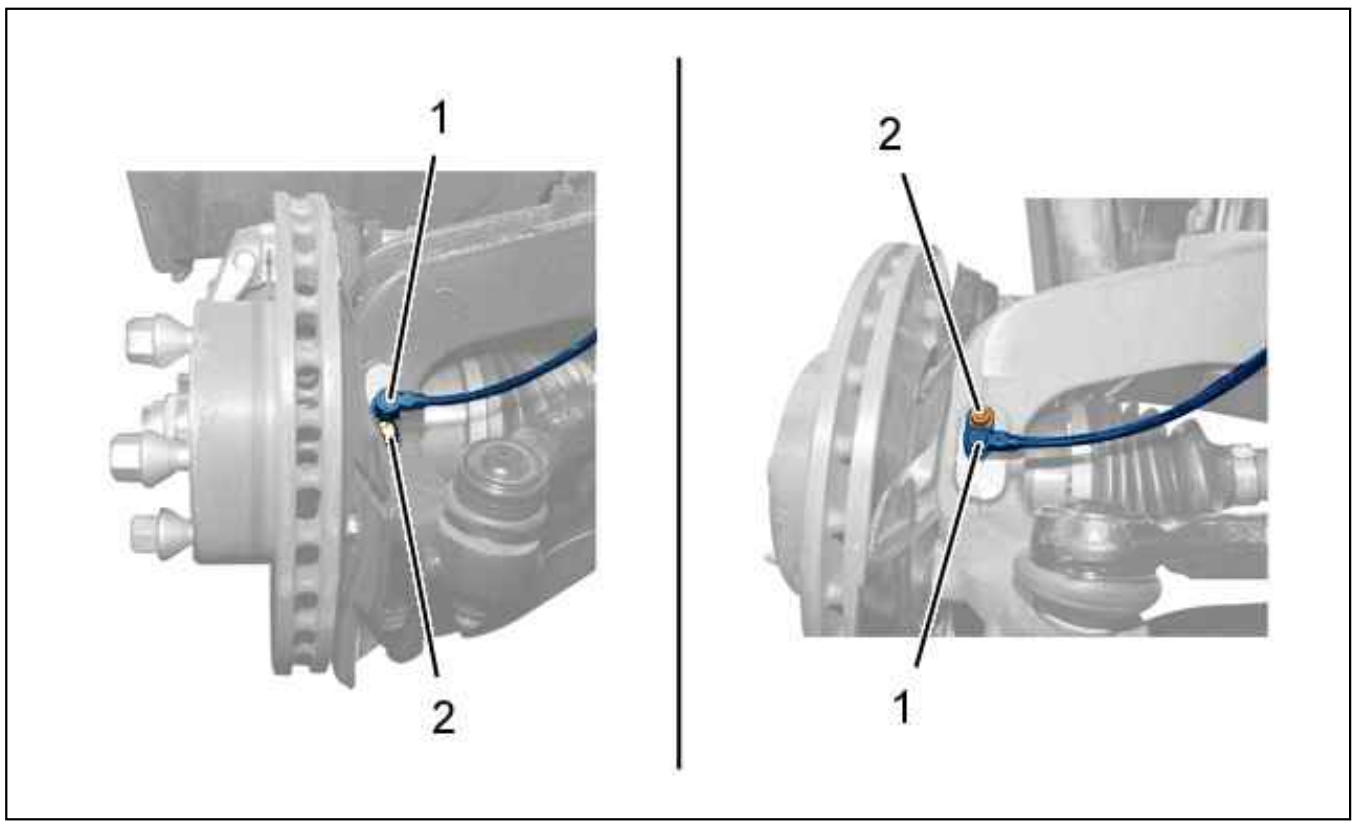

Figure : B3FG241D

Remove :

- The front splash shield
- The bolt (2) (according to assembly)
- The sensor (1) (according to assembly)

Unclip the harness .
Disconnect the wheel sensor connector.

2. Refitting

CAUTION : Adhere to the tightening torques .

Refit :

- The sensor (1)
- The bolt (2)
- The front splash shield

Clip the harness.
Reconnect the wheel sensor connector .
Fit the wheels.
Return the vehicle to its wheels.
Tighten the wheel bolts .
Road test.
Read the fault codes.

REMOVING - REFITTING : REAR BRAKE DISC

ESSENTIAL : Observe the safety and cleanliness recommendations .

ESSENTIAL : Always replace the brake pads if replacing the discs.

1. Removing

Untighten the rear wheel bolts.
Slacken the parking brake .
Raise and support the vehicle, with the rear wheels hanging free.
Remove the rear wheels.

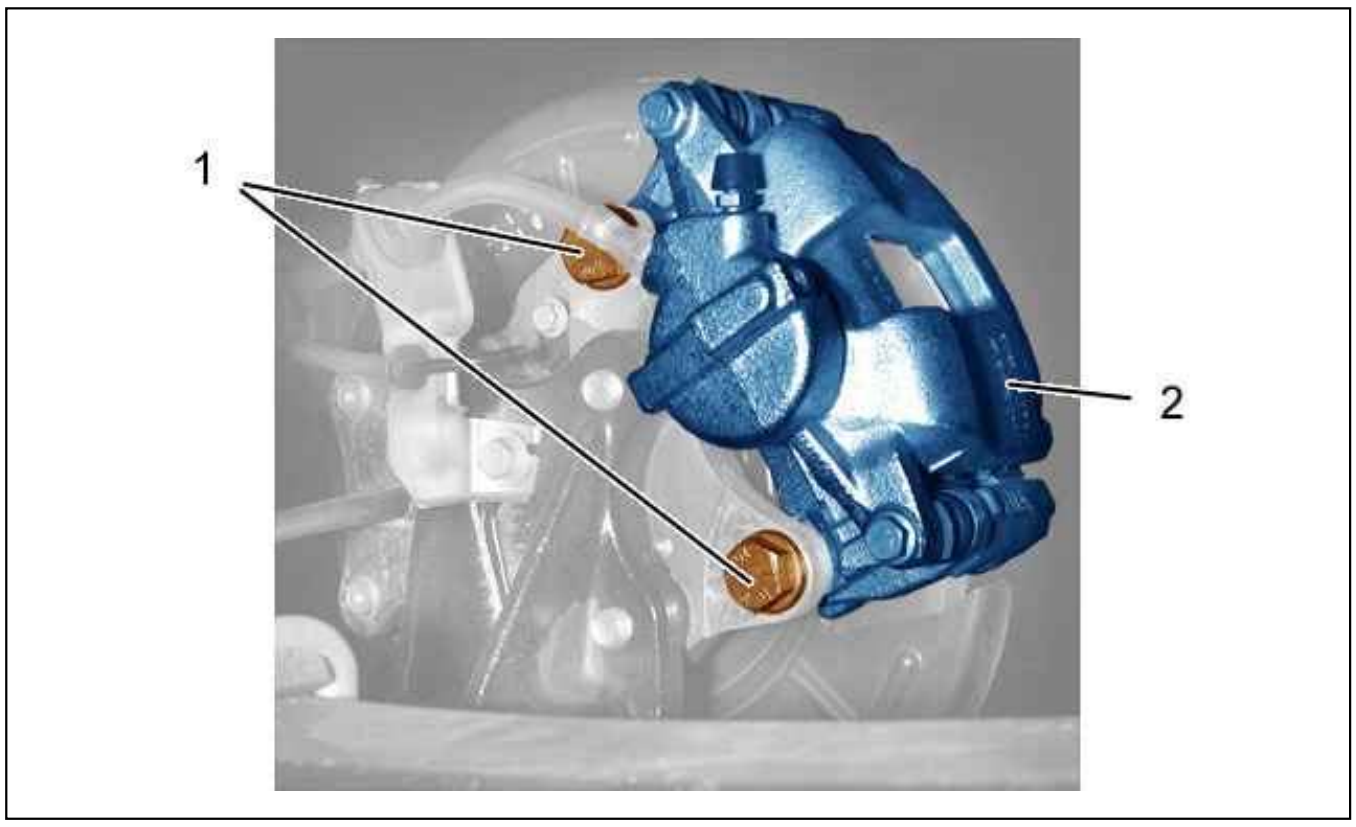

Figure : B3FP7K6D

Remove :

- The rear brake pads (see the relevant operation)
- The bolts (1)
- The rear brake caliper (2)

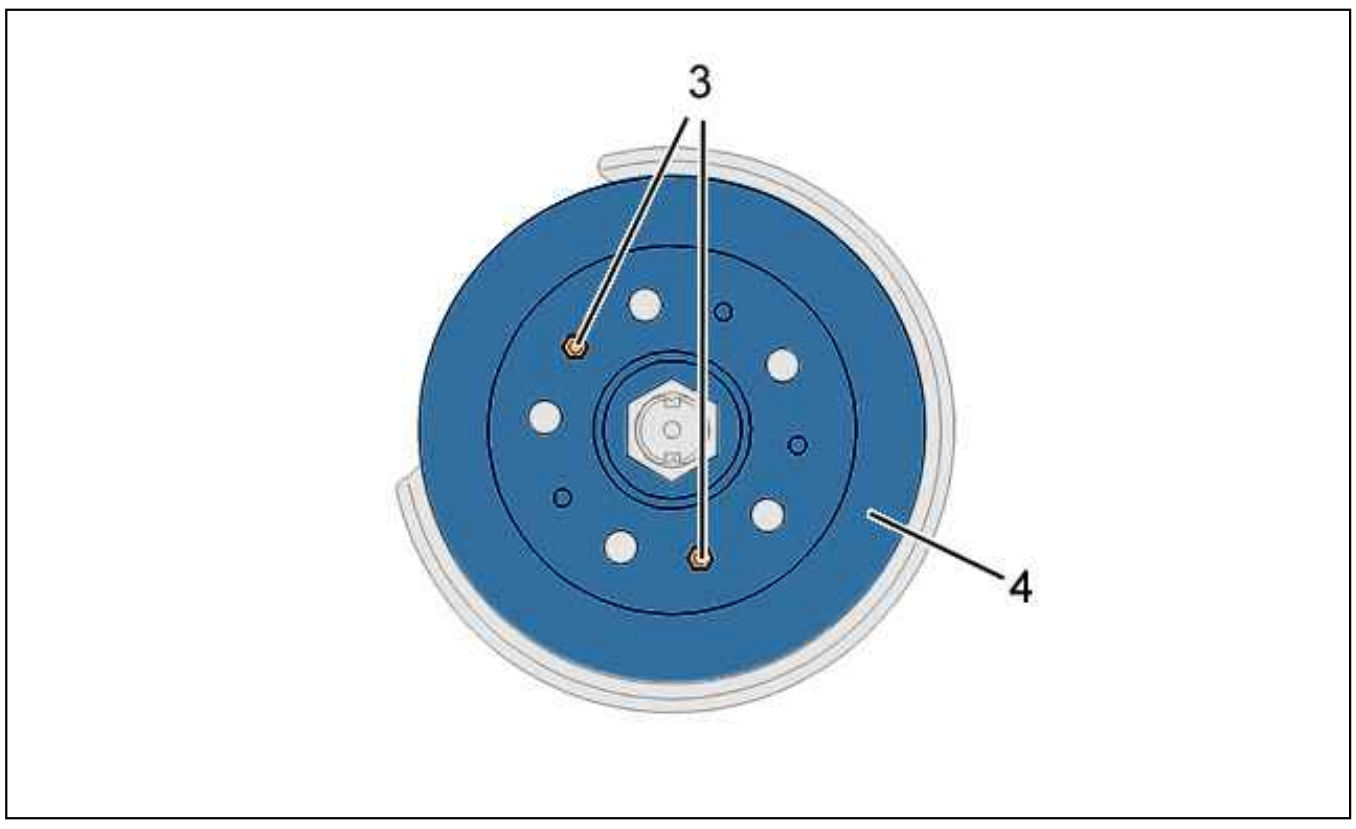

Figure : B3FG244D

Remove :

- The bolts (3)
- The rear brake disc (4)

2. Cleaning

ESSENTIAL : Do not use compressed air to clean the brakes.

2.1. 1st possibility

Clean the rear brake disc (4) and the rear brake caliper (2) ; With a recommended brake cleaning product.
Allow to dry and to drain.

Wipe with a paper towel.

2.2. 2nd possibility

Use an approved dedusting instrument (see tools and equipment catalogue).

3. Refitting

CAUTION : Adhere to the tightening torques .

Clean the rear brake disc (4)/hub contact surfaces thoroughly.
Refit :

- The rear brake disc (4)
- The bolts (3)

Tighten the bolts (3).
Refit :

- The rear brake caliper (2)
- The bolts (1) (new) (pre-coated with a thread locking product)

Tighten the bolts (1).
Refit : The rear brake pads (see the relevant operation).
Apply the brakes, with the engine running, several times before driving the vehicle.
Check the operation of the brakes.
Refit the rear wheels.
Return the vehicle to its wheels.
Tighten the wheel bolts .

REMOVING - REFITTING : FRONT BRAKE CALIPER

ESSENTIAL : Observe the safety and cleanliness recommendations .

1. Removing

Untighten the wheel screws (front).
Lift and support the vehicle with front wheels suspended.
Remove :

- The front wheels
- The brake pads (see the relevant operation)

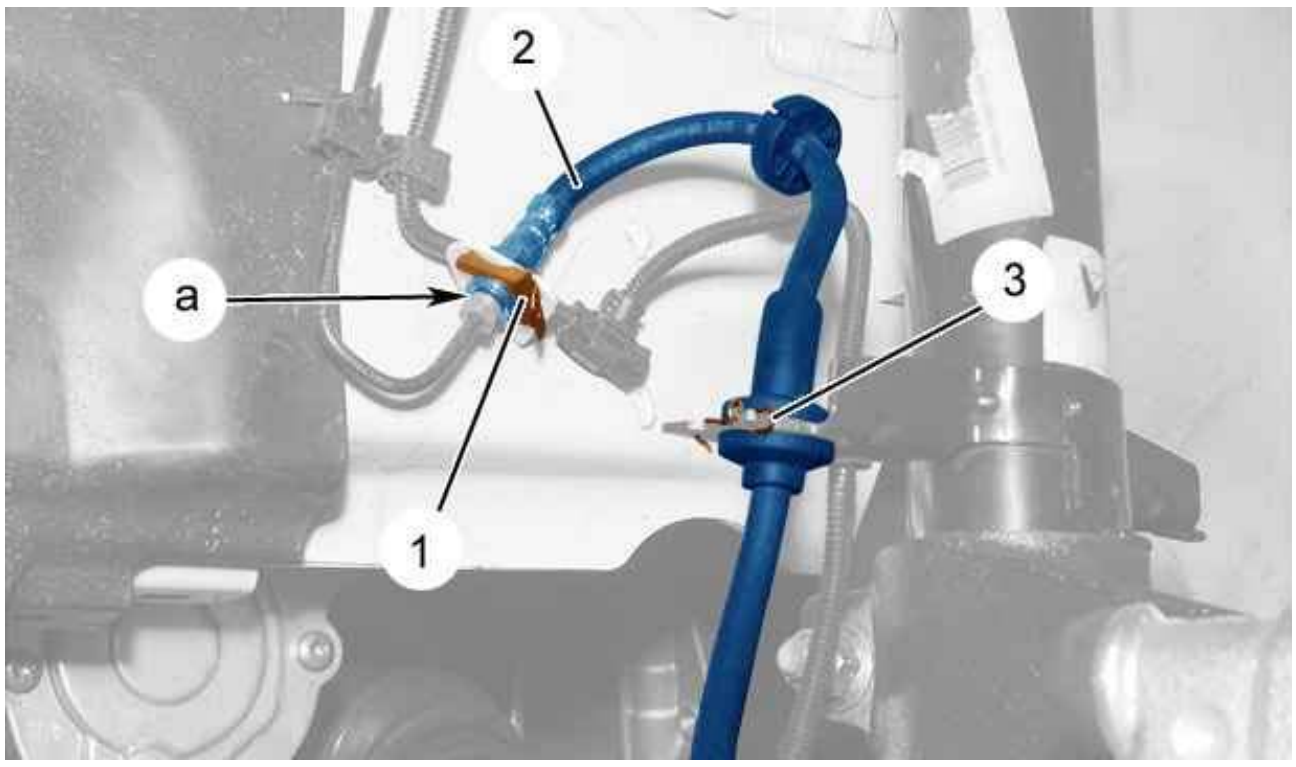

Figure : B3FP7K8D

Remove the clip (1).
Disconnect the hose union (2) (at "a").
Plug the front brake rigid pipe.
Remove the clip (3).
Move aside the hose union (2) from its support.

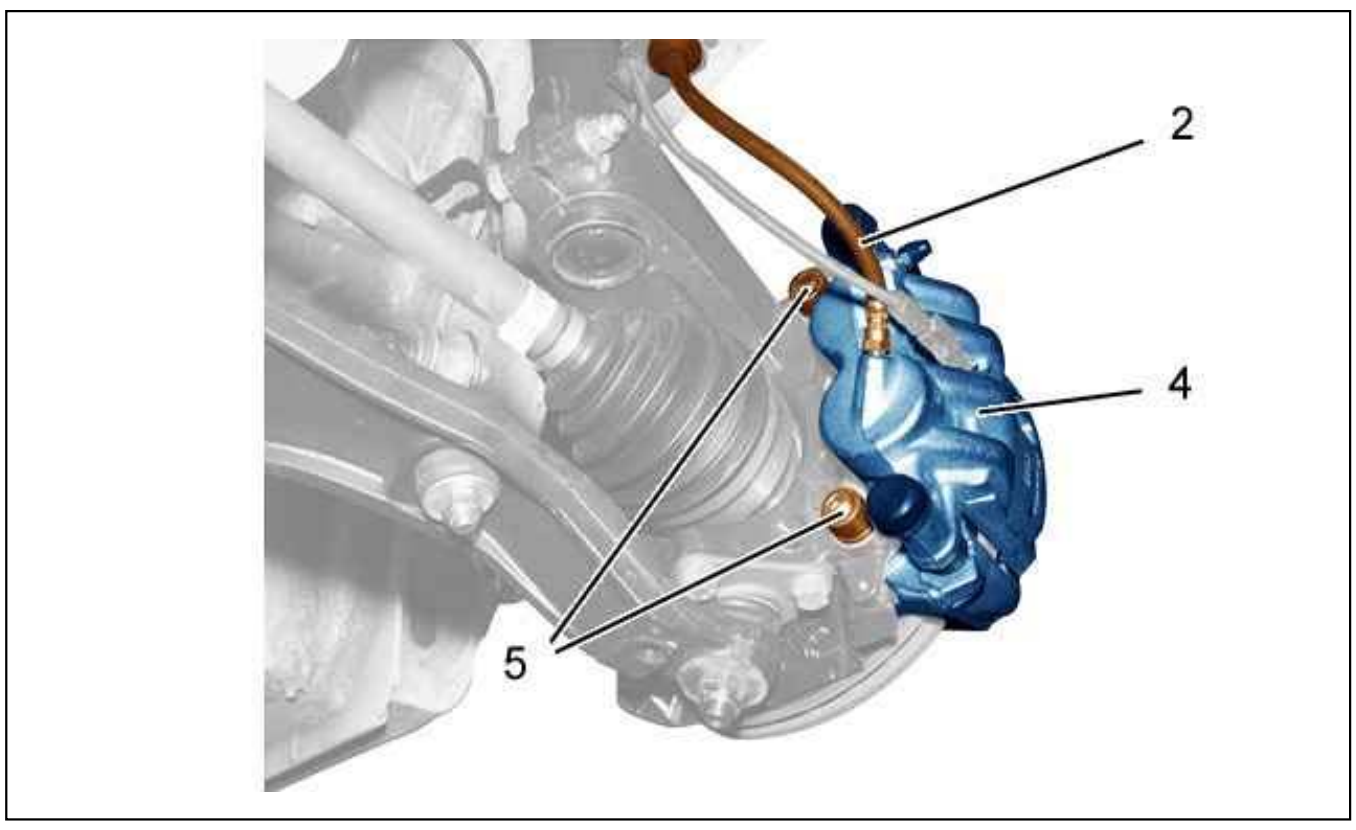

Figure : B3FP7K9D

Disconnect the hose union (2) from the brake caliper (4).
Remove and plug the hose union (2).
Blank the brake caliper (4).
Remove :

- The bolts (5)
- The brake caliper (4)

2. Cleaning

ESSENTIAL : Do not use compressed air to clean the brakes.

2.1. 1st possibility

Clean the brake disc and caliper (4) ; With a recommended brake cleaning product.
Allow to dry and to drain.
Wipe with a paper towel.

2.2. 2nd possibility

Use an approved dedusting instrument (see tools and equipment catalogue).
Visually check :

- Around the pistons for leak
- That the protective gaiters are in good condition and correctly adjusted
- The disc for wear

Check the operation of the brake caliper (4).

3. Refitting

CAUTION : Adhere to the tightening torques .

Refit :

- The brake caliper (4)
- The bolts (5) (new) (pre-coated with a thread locking product)

Tighten the bolts (5).
Couple the flexible union (2) to the brake caliper (4).
Position the hose union (2) on its support.
Couple the flexible union (2) to the rigid brake piping (front).
Refit :

- The clip (1)
- The clip (3)
- The brake pads (see the relevant operation)
- The front wheels

Bleed the brake system (see the relevant operation).
Return the vehicle to its wheels.
Tighten the wheel bolts .

REMOVING - REFITTING : ABS/ESP ECU

ESSENTIAL : Observe the safety and cleanliness recommendations .

1. Tooling

Equipment : Diagnostic station.

2. Removing

Disconnect the battery.
Remove the ABS/ESP hydraulic valve block .

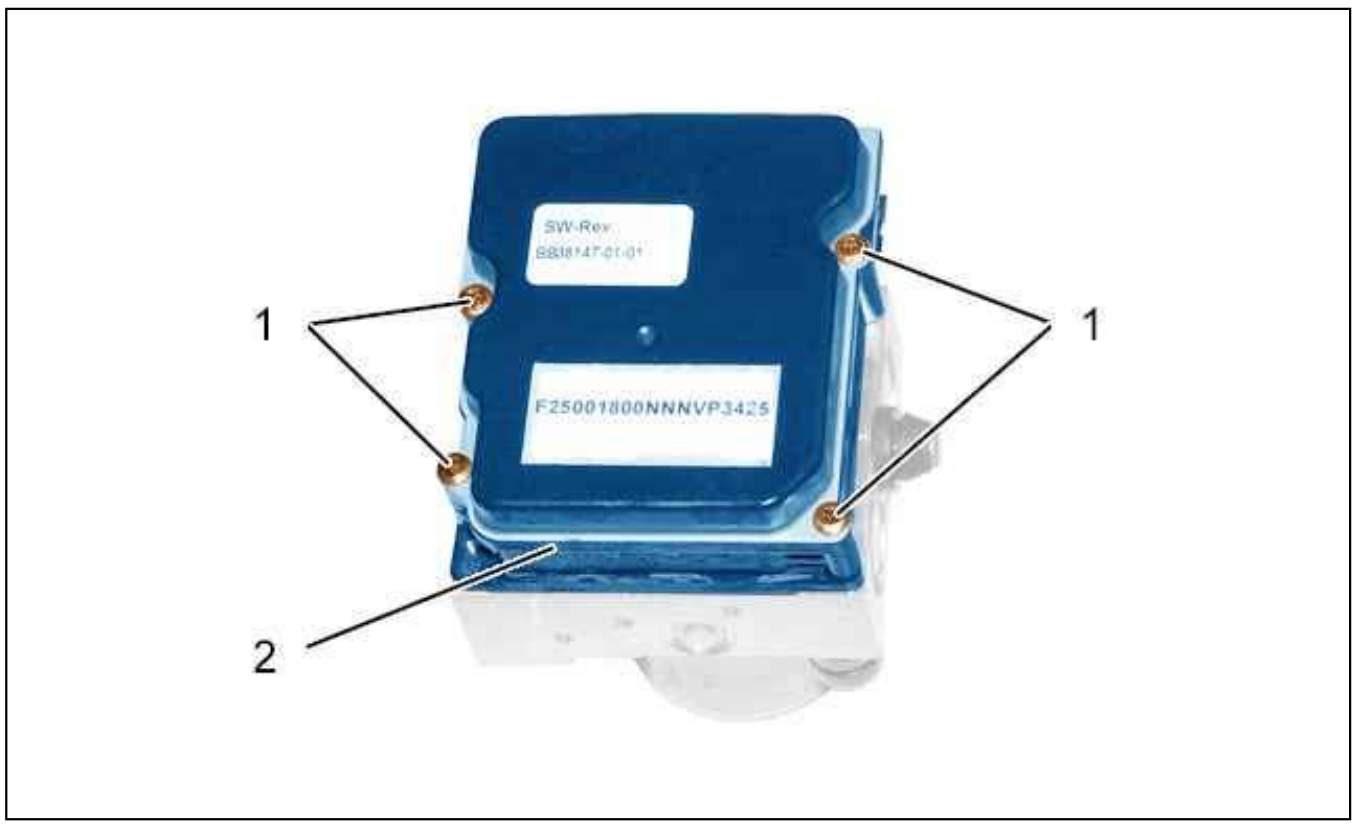

Figure : B3FP7N0D

Remove :

- The bolts (1)
- The ABS/ESP ECU (2)

3. Refitting

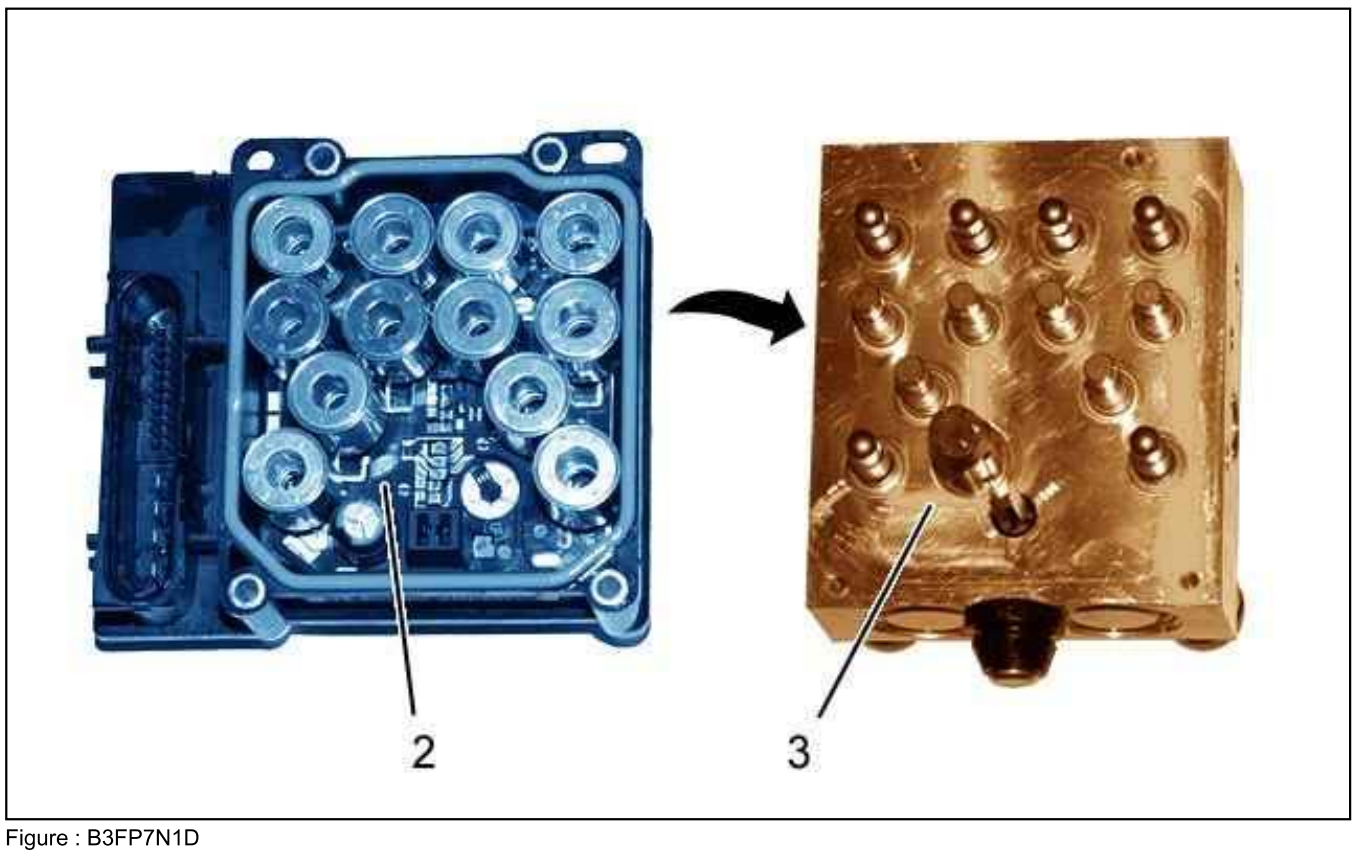

Figure : B3FP7N1D

Refit :

- The ABS/ESP ECU (2) (on the hydraulic valve block (3))
- The bolts (1)

Pre-tighten to 1,75 ± 0,25 N.m.
Tighten to 3 ± 0,3 N.m.
Refit : The ABS/ESP hydraulic block .

CAUTION : Perform the operations to be carried out following reconnection of the battery.

Reconnect the battery.
Bleed the brake system .

3.1. ESP ECU

Connect the diagnostic tool to the vehicle’s diagnostic socket.
Carry out an global test.
Start communication by ECU.
To calibrate the steering wheel angle sensor, go to the replacement parts menu, longitudinal acceleration sensor, calibration of the longitudinal acceleration sensor.
To calibrate the longitudinal acceleration sensor, go to the replacement parts menu, switch module at the steering wheel, calibration of the steering wheel angle sensor (CAV).

3.2. Refitting (continued)

Carry out :

- Perform a road test
- Reading of the fault codes

REMOVING - REFITTING : STOP LAMP SWITCH

ESSENTIAL : Observe the safety and cleanliness recommendations .

CAUTION : According to vehicle, there may be two types of brake switch assembly : Either a brake switch assembly with manual adjustment, or a brake switch assembly with automatic adjustment.

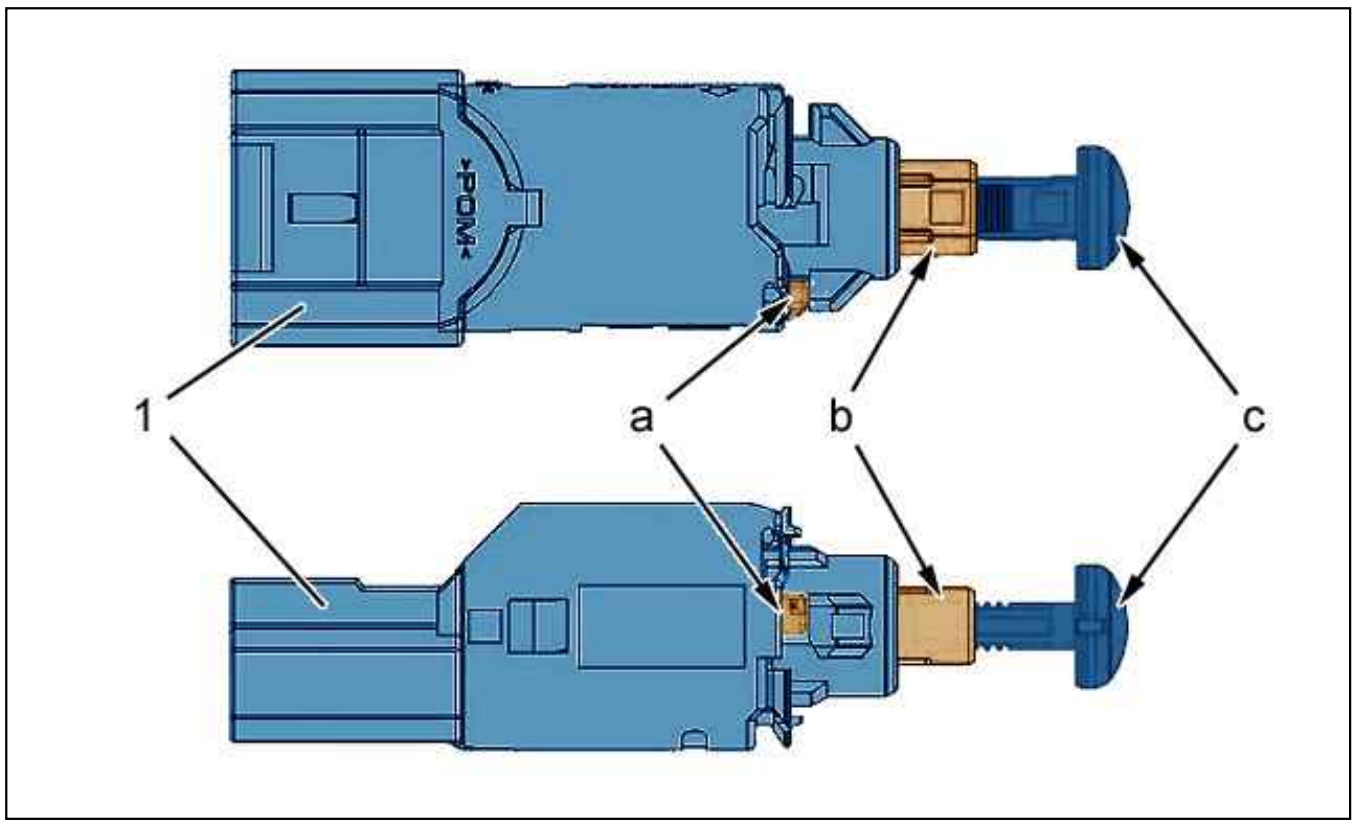

Figure : B3FG247D

(1) Stop lamp switch .
"a" Locking key.
"b" Push rod support .
"c" Thrust pad .

1. Stop lamp switch (With manual adjustment)

1.1. Removing

Disconnect the connector of the stop lamp switch (1).
Rotate the stop lamp switch (1) a quarter turn to the left to unlock it.
Take out the stop lamp switch (1).

1.2. Refitting

CAUTION : Make sure that the brake pedal is in the rest position and that it remains so throughout the operation.

Make sure that the locking latch "a" on the push rod support "b" is inside the extension of the stop lamp switch centring lug (1).
If this is so, the travel of the plunger support "b" within the brake light switch (1) is limited.
Present the stop lamp switch (1) to its support, with the thrust pad "c" against the brake pedal.
Press firmly on the brake light switch (1) in the centreline to set the piston "c" in the plunger support "b" until the base of the brake light switch (1) is in contact with its support.
Rotate the stop lamp switch (1) a good quarter turn to the right to lock it.
Reconnect the connector of the stop lamp switch (1).
Switch on the ignition.
Check that the brake lights come on.

1.3. Check the adjustment : Stop lamp switch (Brake pedal at rest)

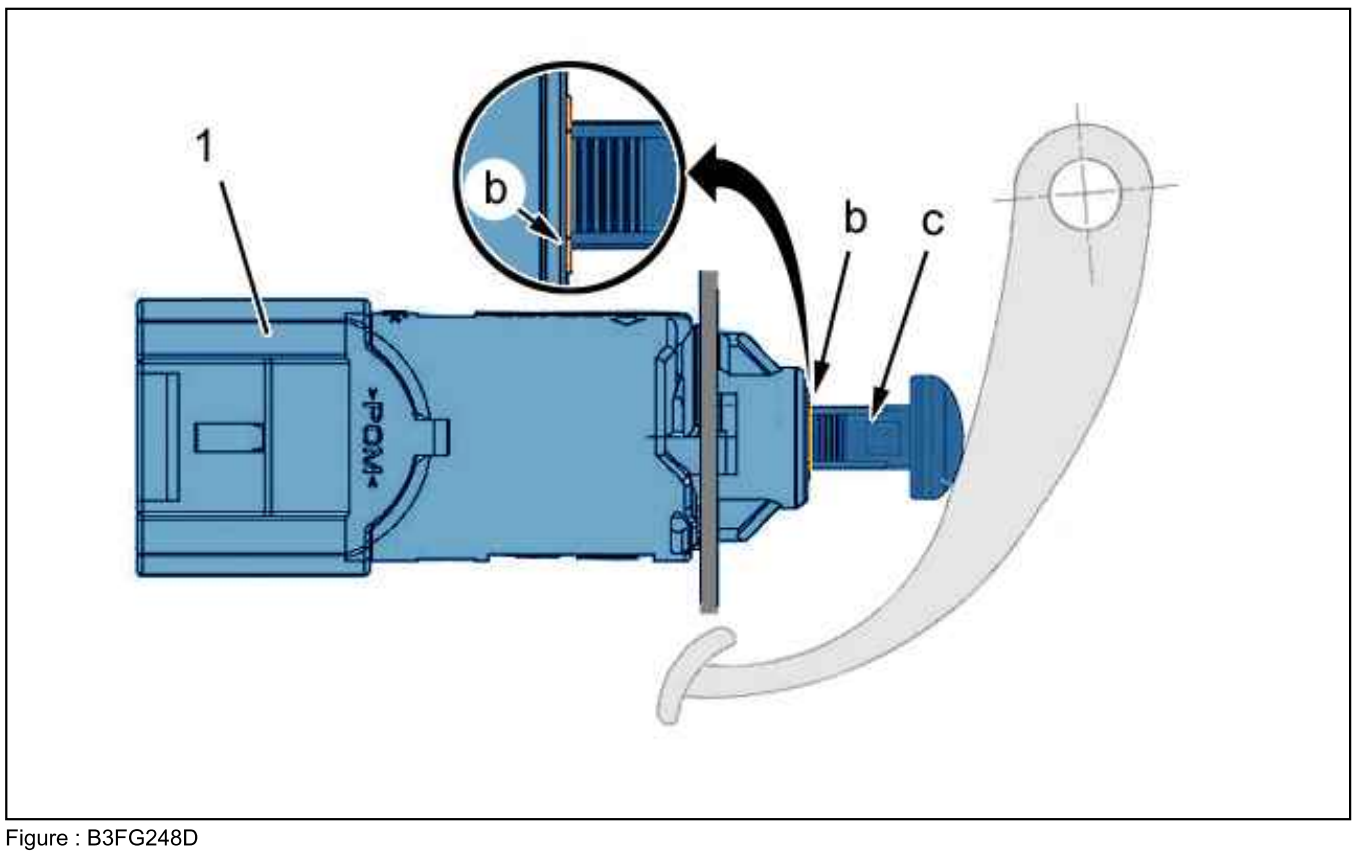

Figure : B3FG248D

Check the position of the plunger support "b" in the brake light switch (1).
The plunger support "b" should be flush with the body of the brake light switch (1) and the plunger "c" should be in contact with the brake pedal.

N.B. : The brake light switch (1) must not be used as a stop for the brake pedal.

1.4. Check the adjustment : Stop lamp switch (Brake pedal pressed down)

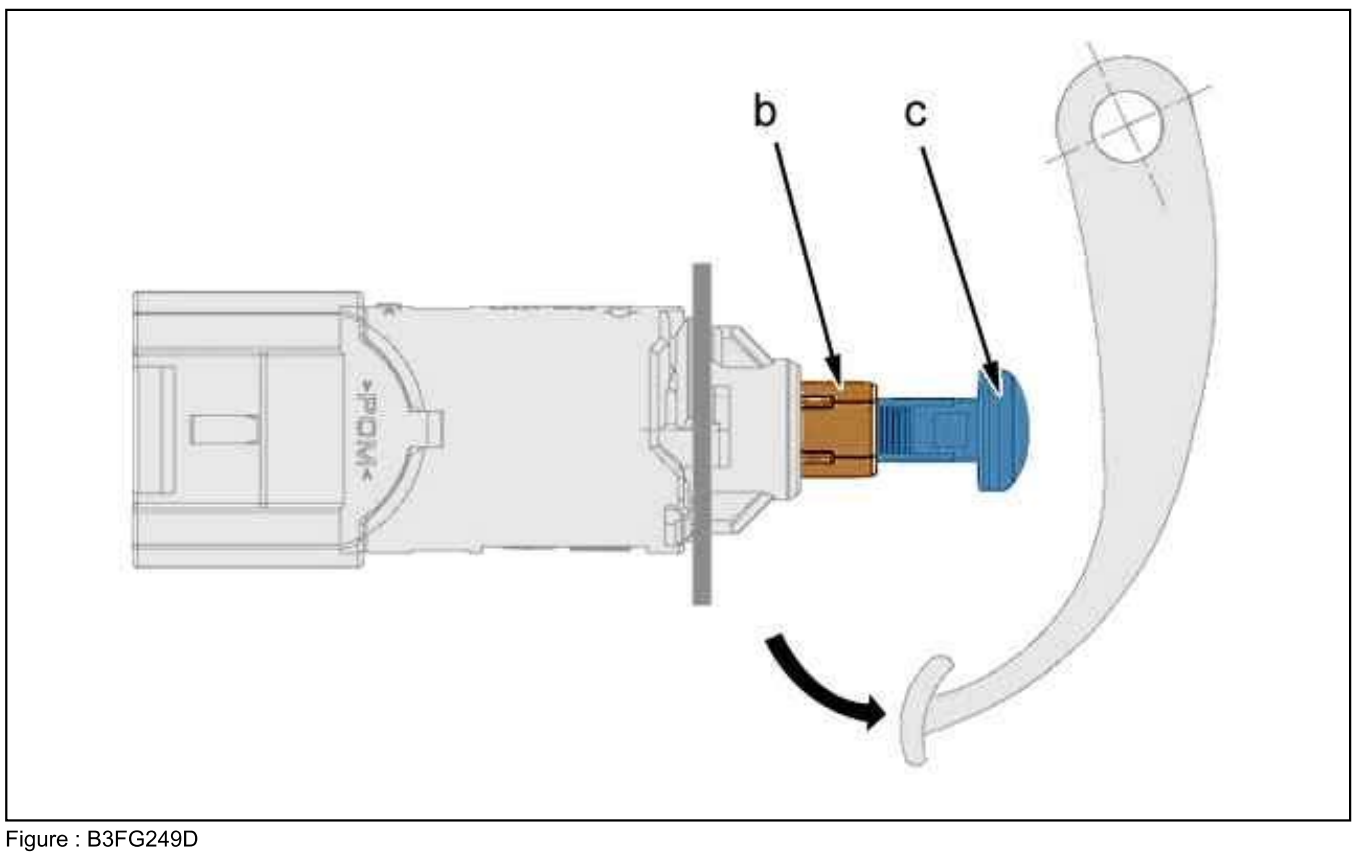

Figure : B3FG249D

The push rod support "b" is free and the push rod "c" is no longer is contact with the brake pedal .

2. Stop lamp switch (With automatic adjustment)

2.1. Removing

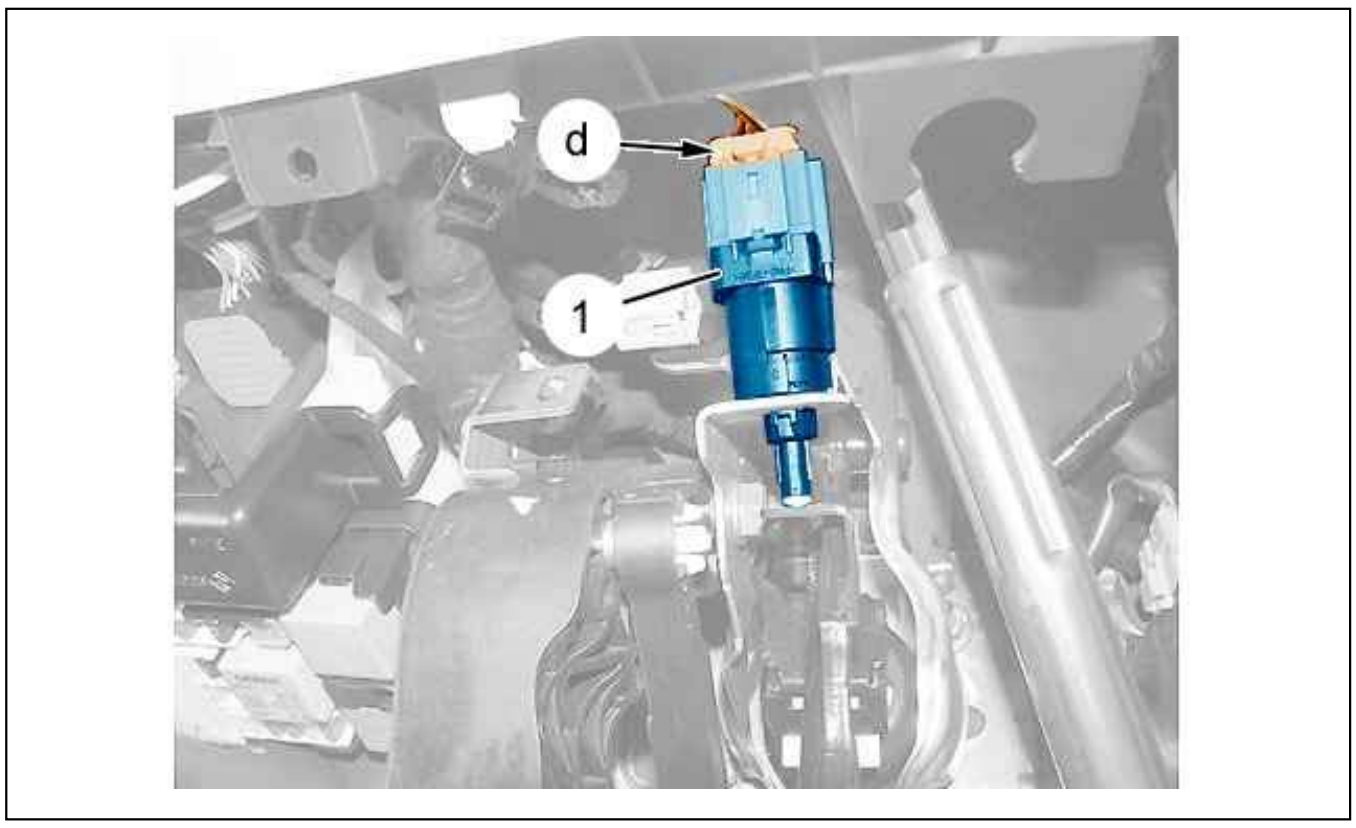

Figure : B3FG24AD

Disconnect the connector of the stop lamp switch (1) (at "d").
Rotate the stop lamp switch (1) a quarter turn anti-clockwise to unlock it.
Remove the stoplamp switch (1).

2.2. Refitting

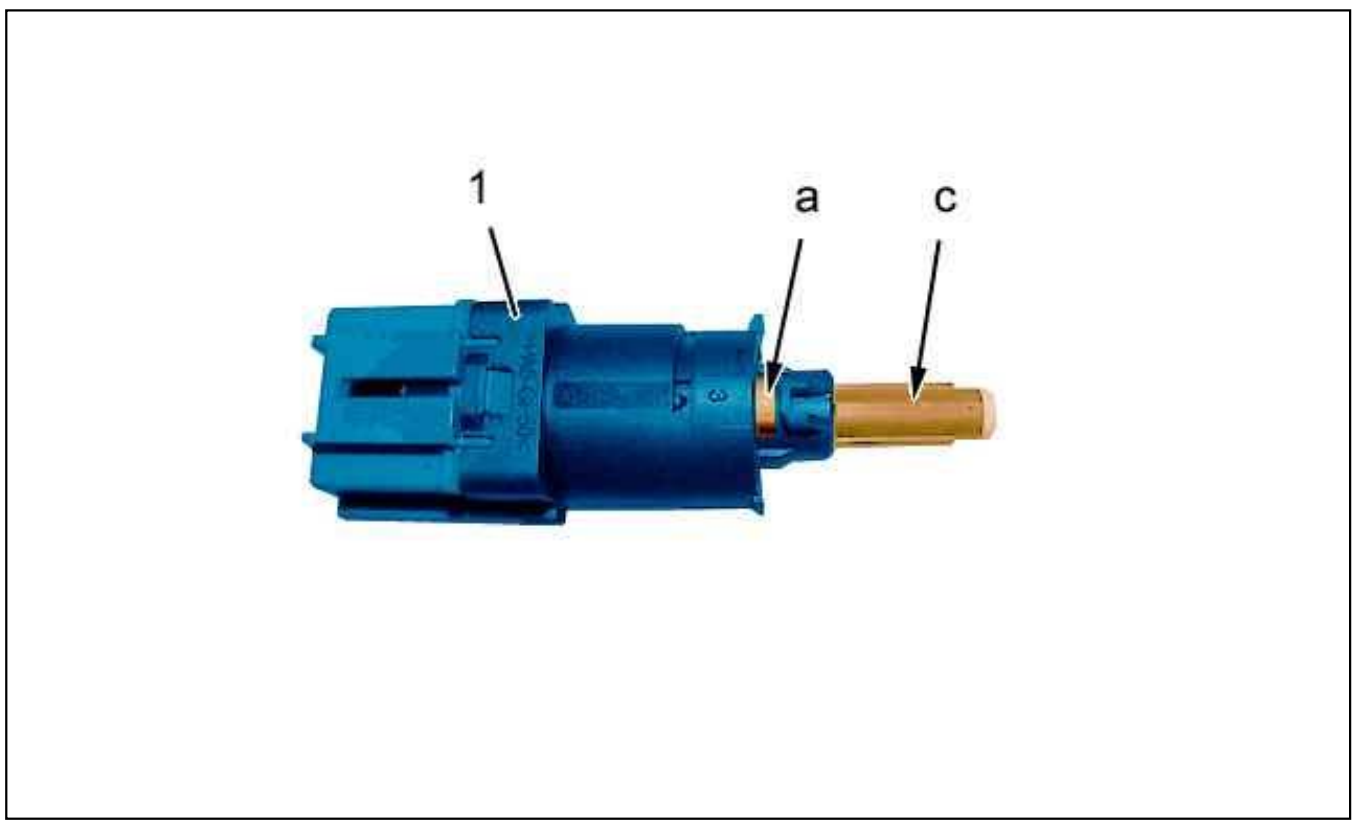

Figure : B3FG24BD

(1) Stop lamp switch .
"a" Locking key.
"c" Thrust pad .

CAUTION : Make sure that the brake pedal is in the rest position and that it remains so throughout the operation. Do not support the brake pedal while fitting the brake light switch (1), risk of incorrect setting.

Check that the locking key "a" is inside the extension of the stoplamp switch centring lug (1).
Present the stop lamp switch (1) to its support, with the thrust pad "c" against the brake pedal.
Turn the brake light switch (1) one quarter of a turn clockwise to the stop.

N.B. : Adjustment of the stoplamp switch (1) is automatic once it is locked.

Re-connect the connector (at "d").
Check that the brake lights come on.

REMOVING - REFITTING : PARKING BRAKE SHOES

1. Recommended tools

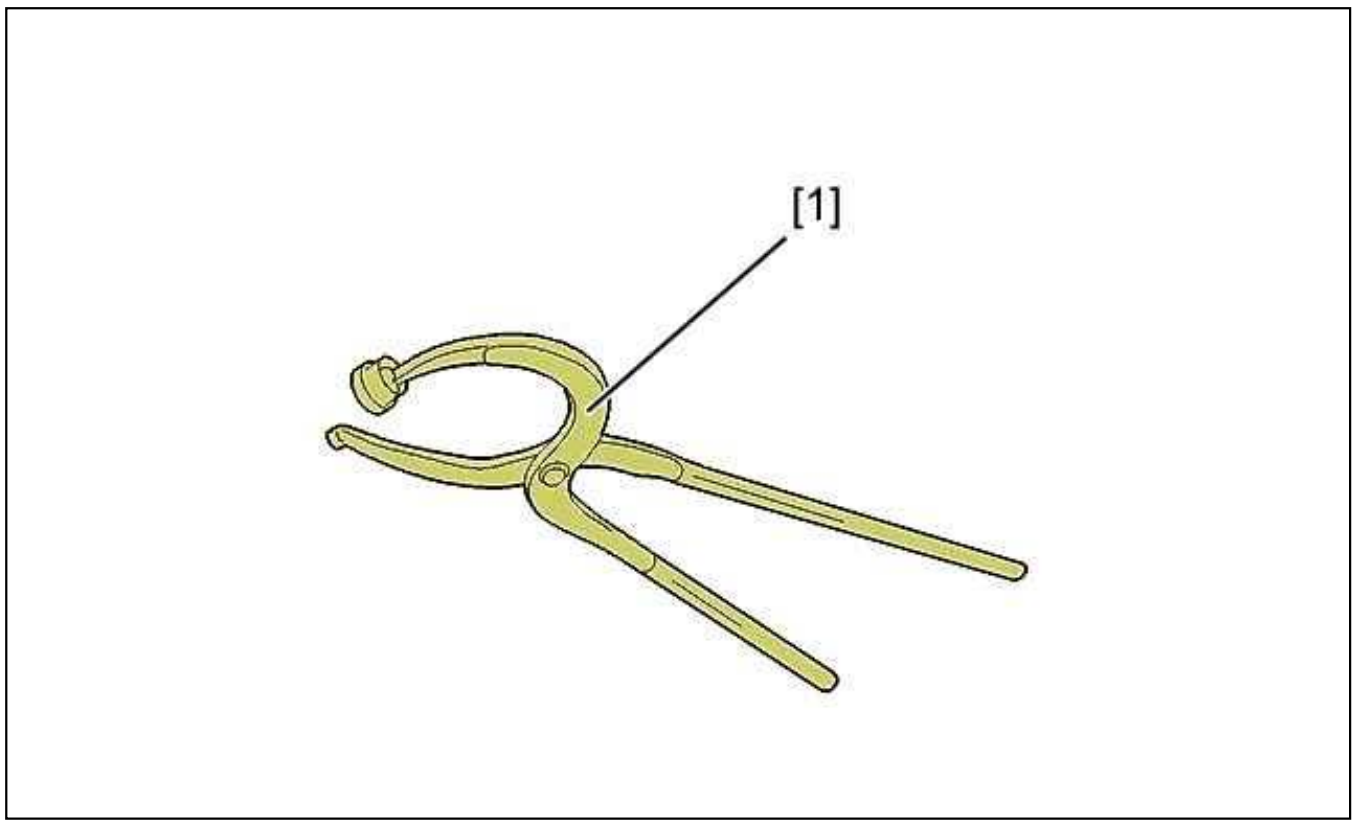

Figure : E5AP2XRD

[1] pliers for the removal and fitting of FACOM 196 TS 2110-T brake shoe springs.

2. Removing

Untighten the wheel screws (rear).
Slacken the parking brake .
Raise and support the vehicle, with the rear wheels hanging free.
Remove :

- The rear wheels
- The rear brake disc (see the relevant operation)
- The rear hub (see the relevant operation)

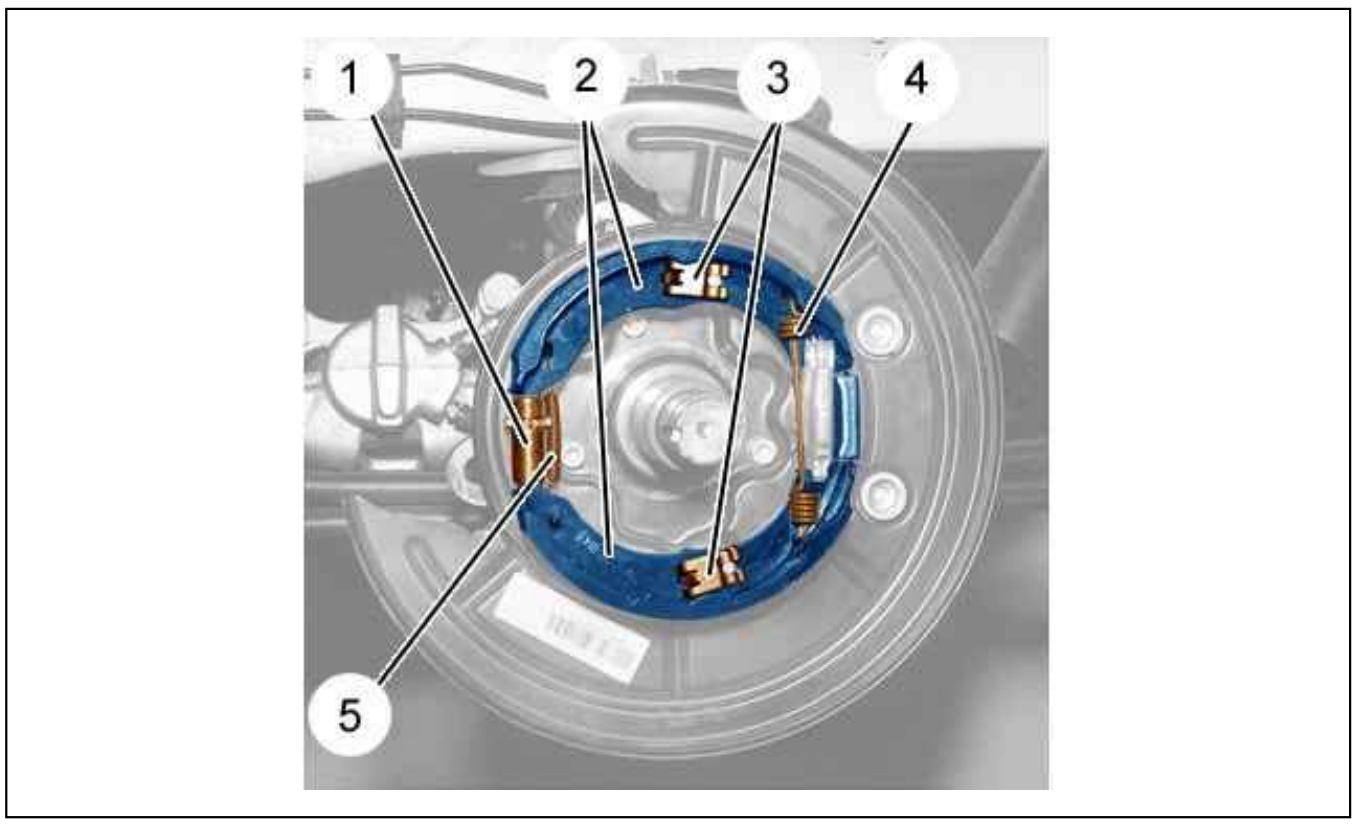

Figure : B3FP7KUD

Remove :

- The adjusting mechanism (1)
- The spring (5)
- The retaining clips (3)
- The brake pads (2)
- The spring (4) ; Using tool [1]

3. Cleaning

ESSENTIAL : Do not use compressed air to clean the brakes.

3.1. 1st possibility

Clean the brake disc and the brake caliper, using an approved brake cleaning product.
Allow to dry and to drain.

Wipe with a paper towel.

3.2. 2nd possibility

Use an approved dedusting instrument (refer to the Material and Equipment Catalogue).

4. Refitting

Refit :

- The brake pads (2)
- The retaining clips (3)
- The spring (4) ; Using tool [1]
- The spring (5)
- The adjusting mechanism (1)

Thoroughly clean the disc/hub bearings.
Refit :

- The rear hub (see the relevant operation)
- The rear brake disc (see the relevant operation)

Adjust the parking brake (see the relevant operation).
Apply the brakes, with the engine running, several times before driving the vehicle.
Check the operation of the brakes.
Refit the rear wheels.
Return the vehicle to its wheels.
Tighten the wheel bolts .

REMOVING - REFITTING : PEDAL BRACKET

ESSENTIAL : Observe the safety and cleanliness recommendations .

1. Tooling

Tool	Reference	Designation
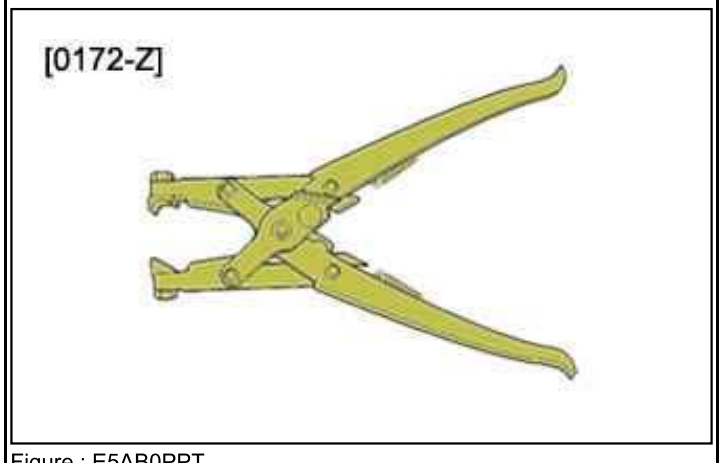 Figure : E5AB0PPT	[0172-Z]	pliers for elastic clips

2. Removing

Disconnect the ancillaries battery.
Remove :

- The fascia lower cover
- The built-in systems interface (if necessary)
- The stop lamp connector
- The steering column

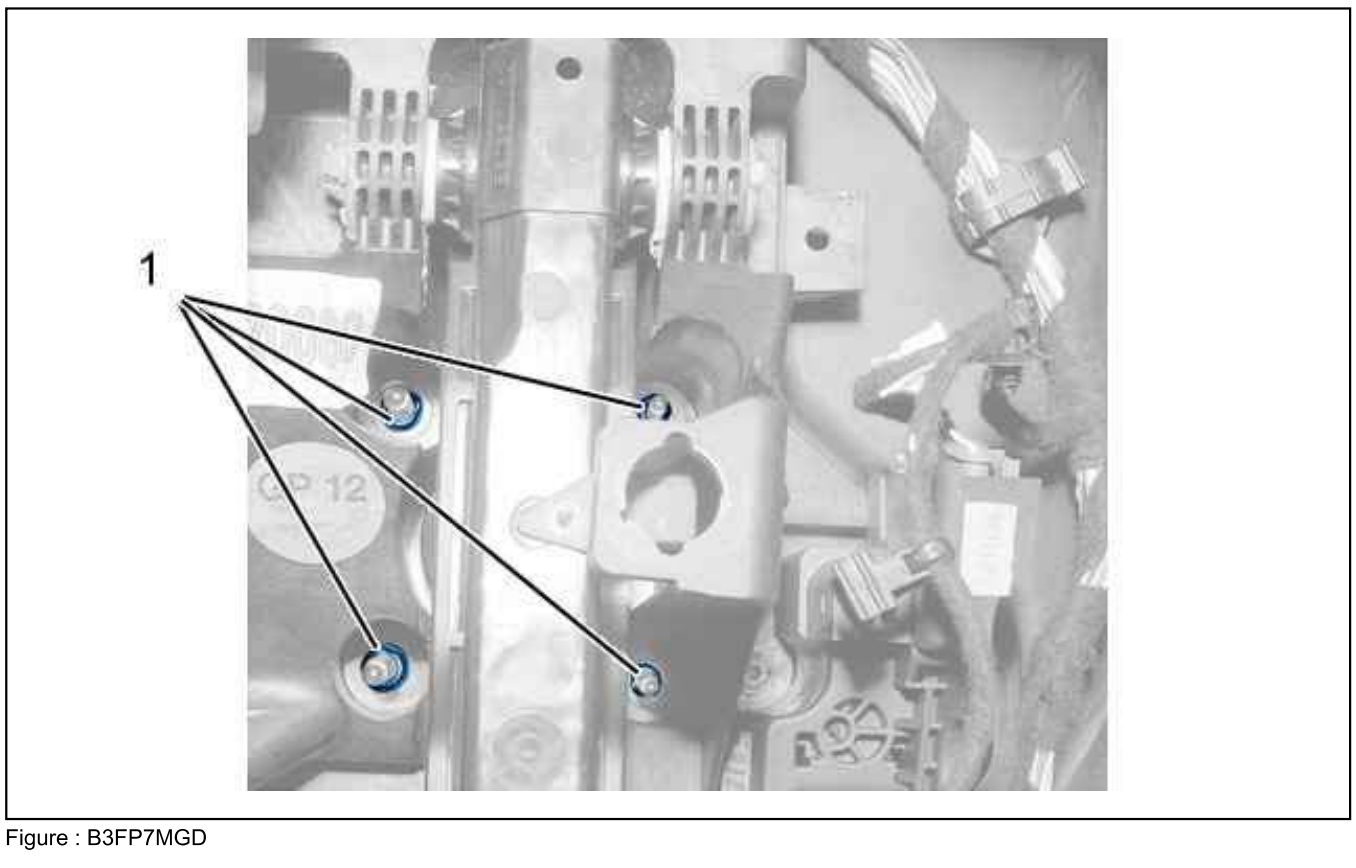

Figure : B3FP7MGD

Remove the nuts (1).

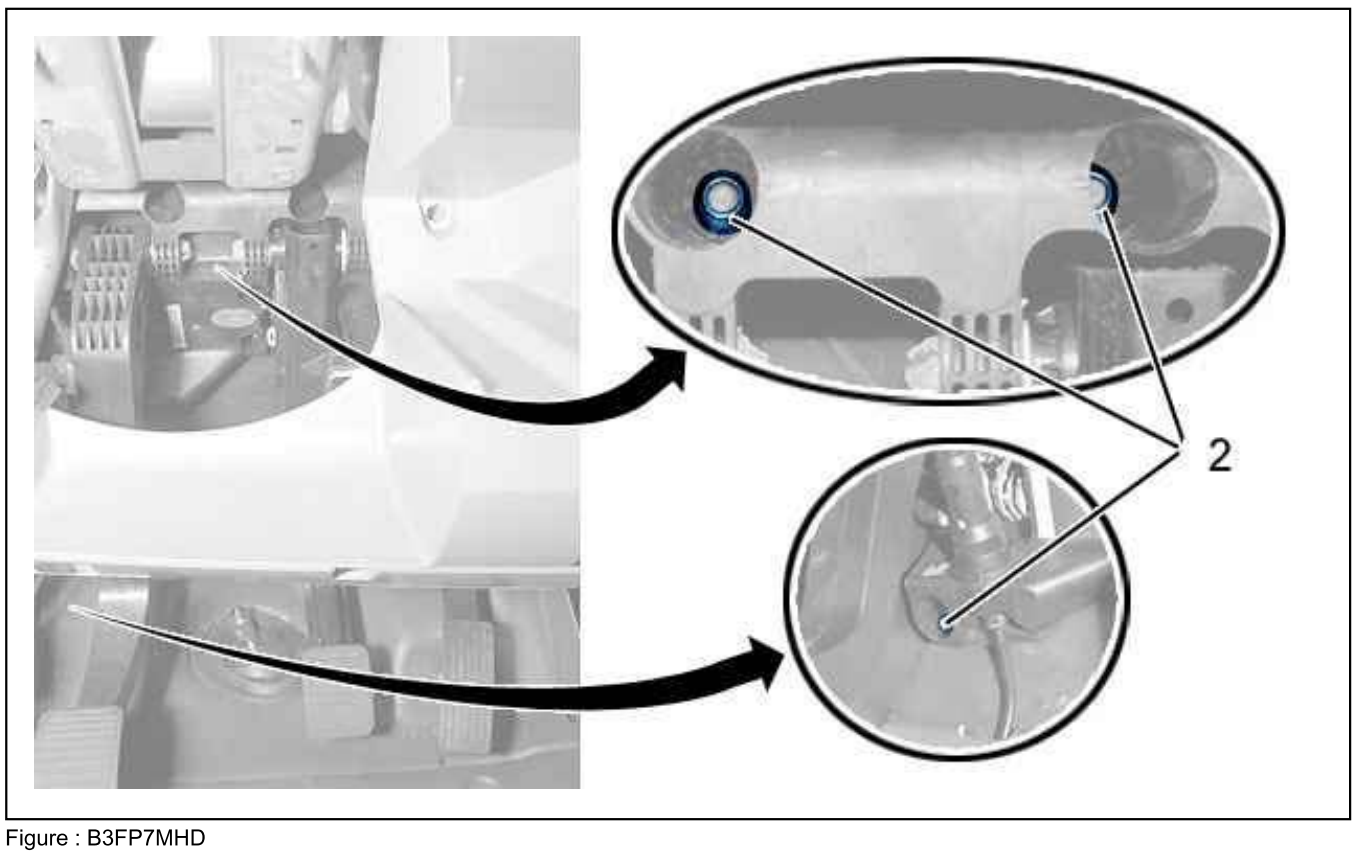

Figure : B3FP7MHD

Remove the nuts (2).

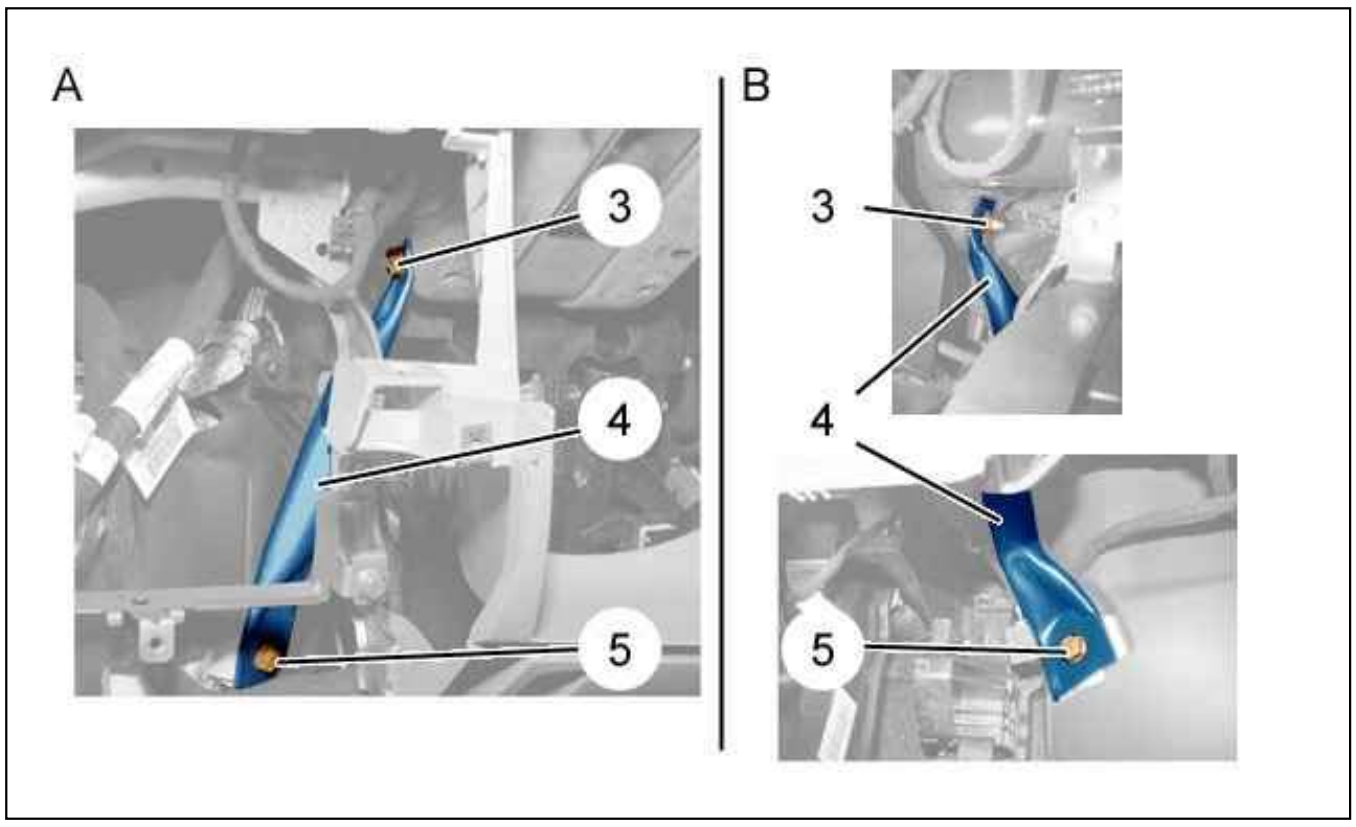

Figure : B3FG29DD

Fitting A : Left-hand drive .
Fitting B : Right-hand drive .
Remove :

- The nut (3)
- The (5) bolt
- The strengthening tube (4)

Disconnect the connectors .

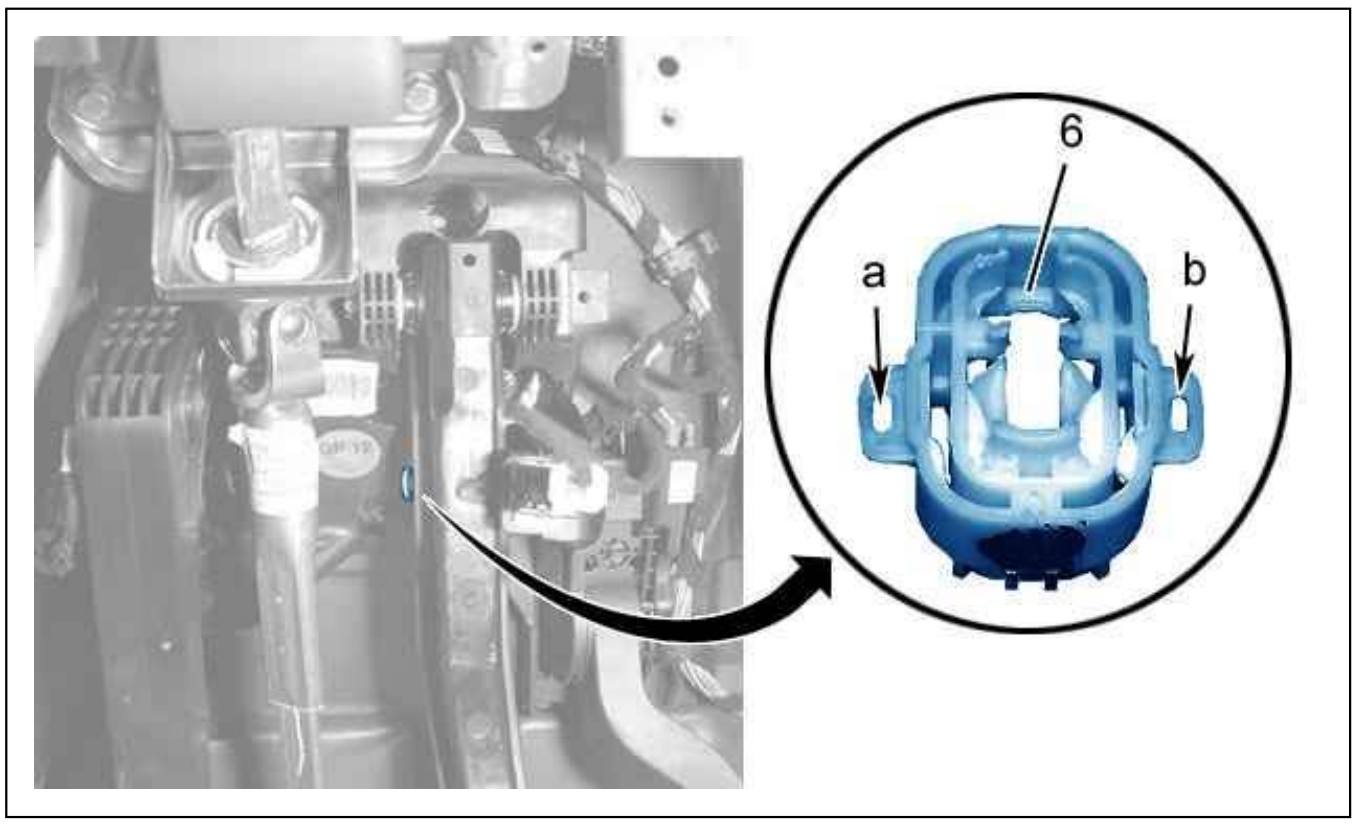

Figure : B3FP7MKD

Uncouple the retaining clip (6) (at "a" and "b") ; Supporting the pedal at the rear.

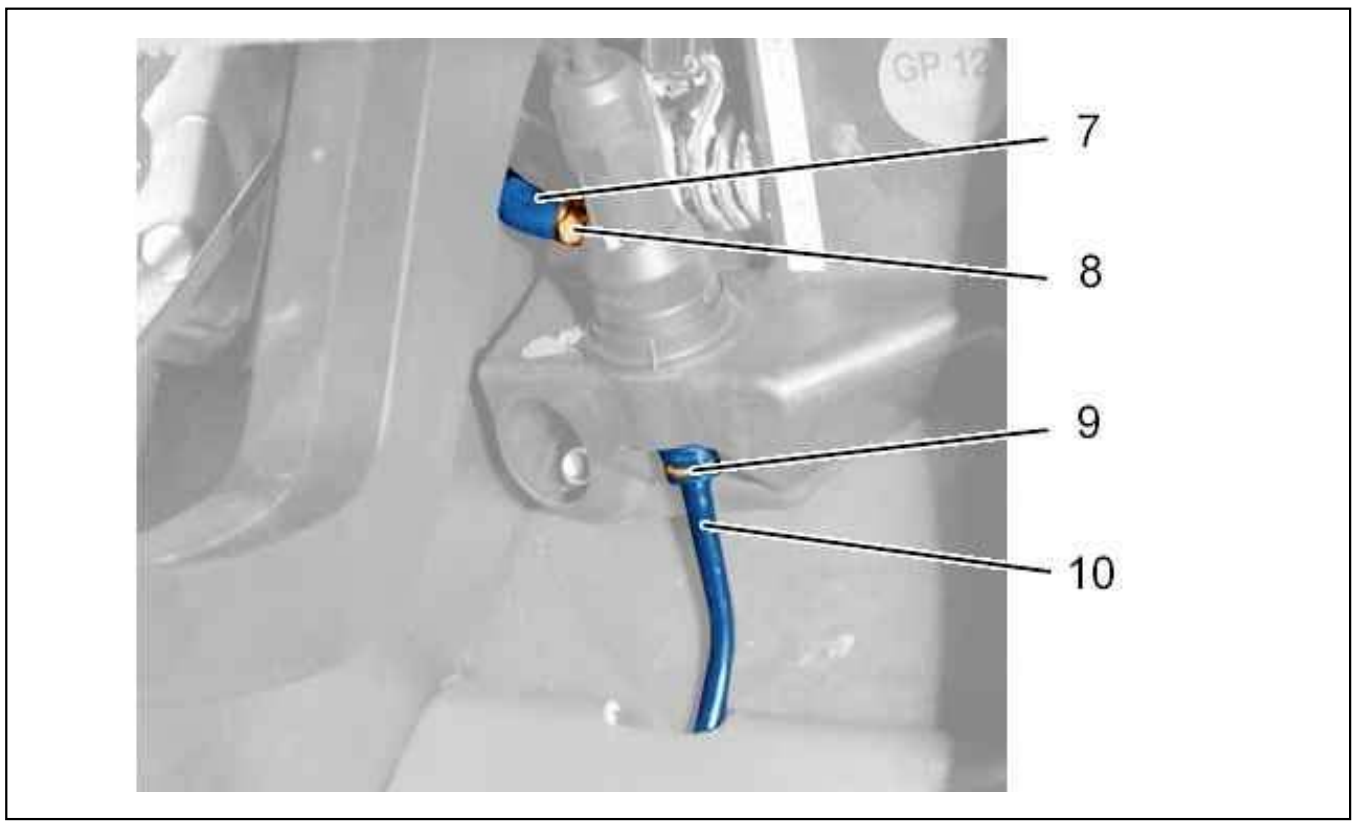

Figure : B3FP7MLD

Uncouple :

- The clip (8) ; Using tool [0172-Z]
- The supply pipe (7) of the master cylinder

Plug the clutch master cylinder supply pipe (7).
Remove the clutch control pipe retaining clip (9).
Uncouple the clutch control pipe (10).
Remove the pedal bracket.

3. Refitting

Position the pedal bracket .
Couple the clutch control pipe (10).
Refit the clutch control pipe retaining clip (9).
Couple up :

- The supply pipe (7) of the master cylinder
- The clip (8) ; Using tool [0172-Z]
- The retaining clip (6)

Reconnect the connectors .
Refit the strengthening tube (4).
Refit and tighten :

- The (5) bolt
- The nut (3)

Refit :

- The nuts (2) ; Tighten to 2,2 daN.m
- The nuts (1) ; Tighten to 2,2 daN.m
- The steering column
- The stop lamp connector
- The built-in systems interface (if necessary)
- The fascia lower cover

Bleed the hydraulic clutch control .

CAUTION : Perform the operations that are required following a reconnection of the ancillaries battery.

Reconnect the ancillaries battery.

REMOVING - REFITTING : MASTER CYLINDER

ESSENTIAL : Observe the safety and cleanliness recommendations .

1. Tooling

tool	Reference	Description
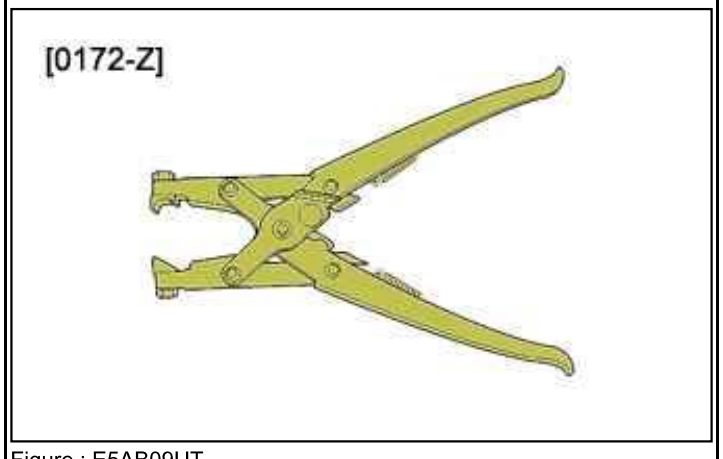 Figure : E5AB09UT	[0172-Z]	pliers for elastic clips

2. Removing

Drain the brake fluid reservoir ; Using a syringe.

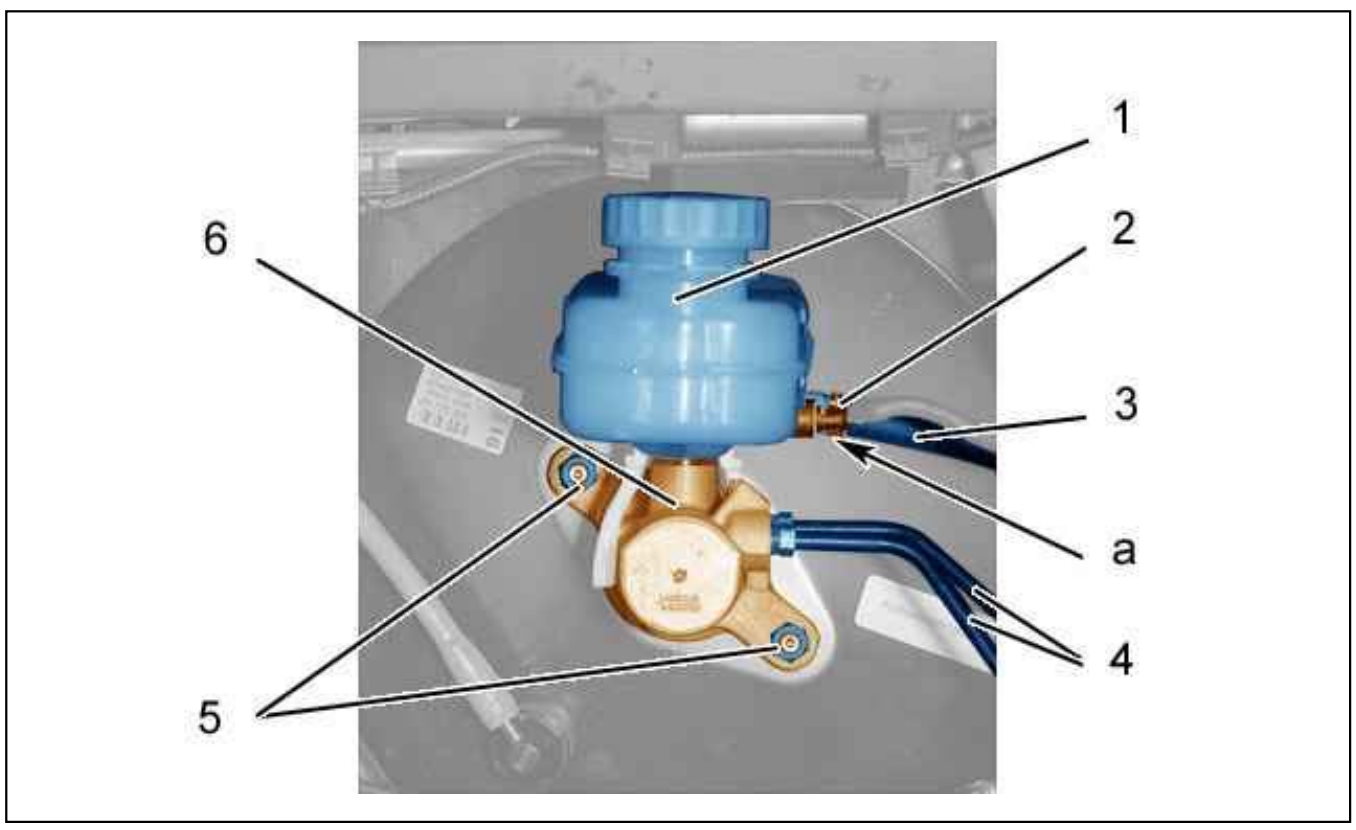

Figure : B3FP7MPD

Disconnect the connector (as "a").
Uncouple :

- The clip (2) ; Using tool [0172-Z]
- The supply pipe (3) of the master cylinder
- The brake pipes (4) (beware of escaping fluid)

Close ; Using plugs :

- The openings of the hydraulic components
- The supply pipe (3) of the master cylinder

Remove :

- The brake fluid reservoir (1)
- The nuts (5)
- The master brake cylinder (6)

3. Refitting

CAUTION : Adhere to the tightening torques .

N.B. : Check the set back of the brake servo thrust rod.

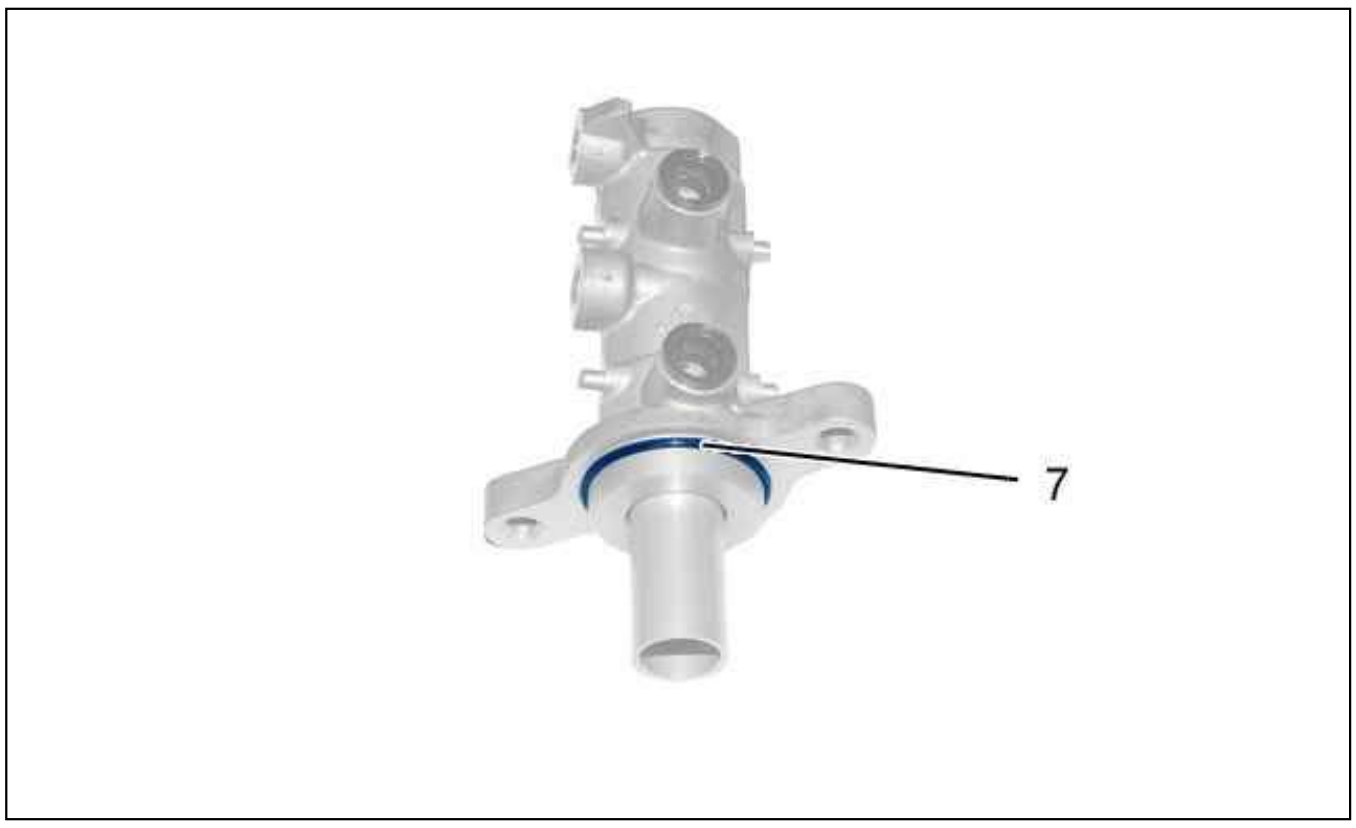

Figure : B3FP7MQD

Fit a new seal (7).
Refit :

- The master brake cylinder (6)
- The nuts (5)
- The brake fluid reservoir (1)

Remove the closers .
Couple up :

- The brake pipes (4)
- The supply pipe (3) of the master cylinder
- The clip (2) ; Using tool [0172-Z]

Reconnect the connector (as "a").
Fill and bleed the braking system .

REMOVING - REFITTING : BRAKE SERVO

ESSENTIAL : Observe the safety and cleanliness recommendations .

1. Removing

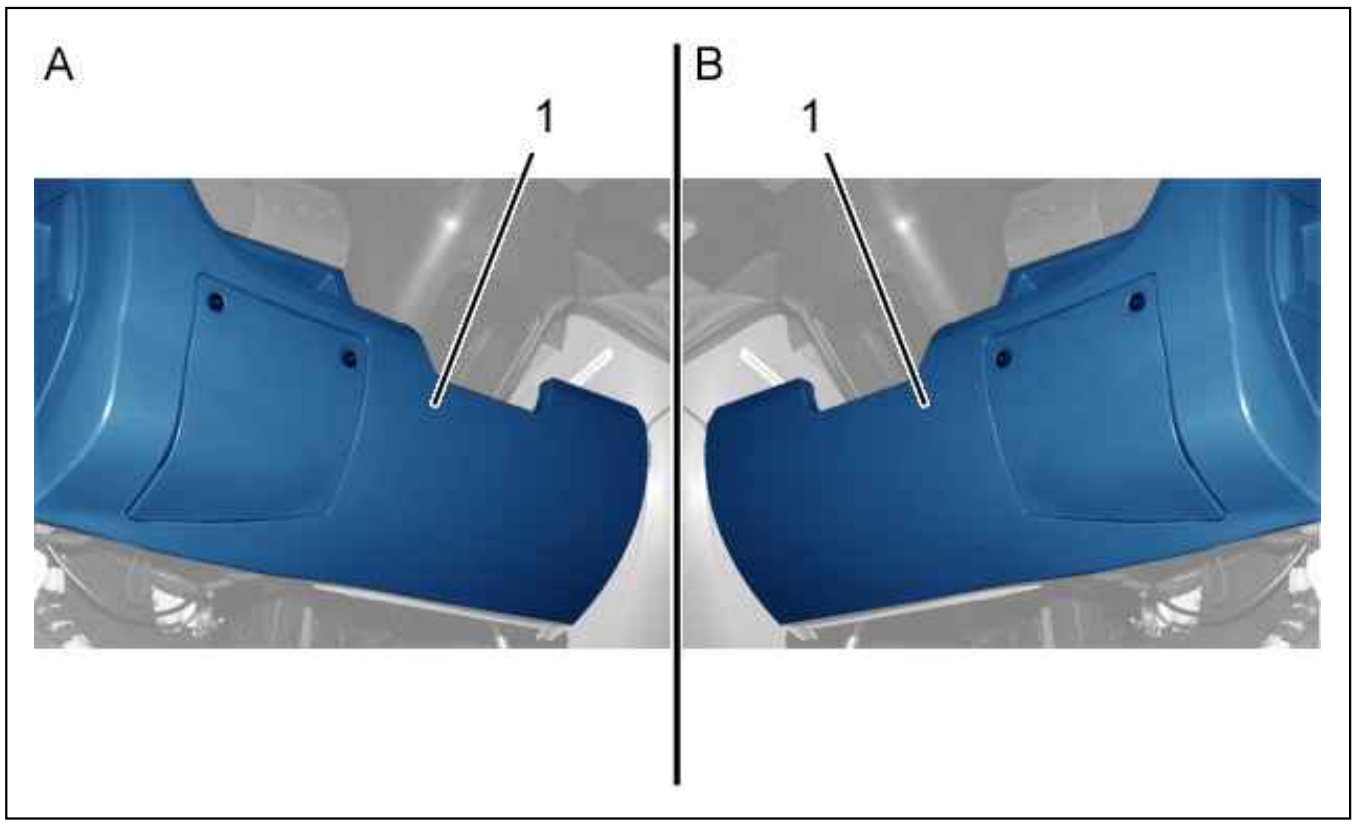

Figure : C5FG1GND

"A" assembly : Left-hand drive .
"B" assembly : Right-hand drive .
Remove the lower lining (1).

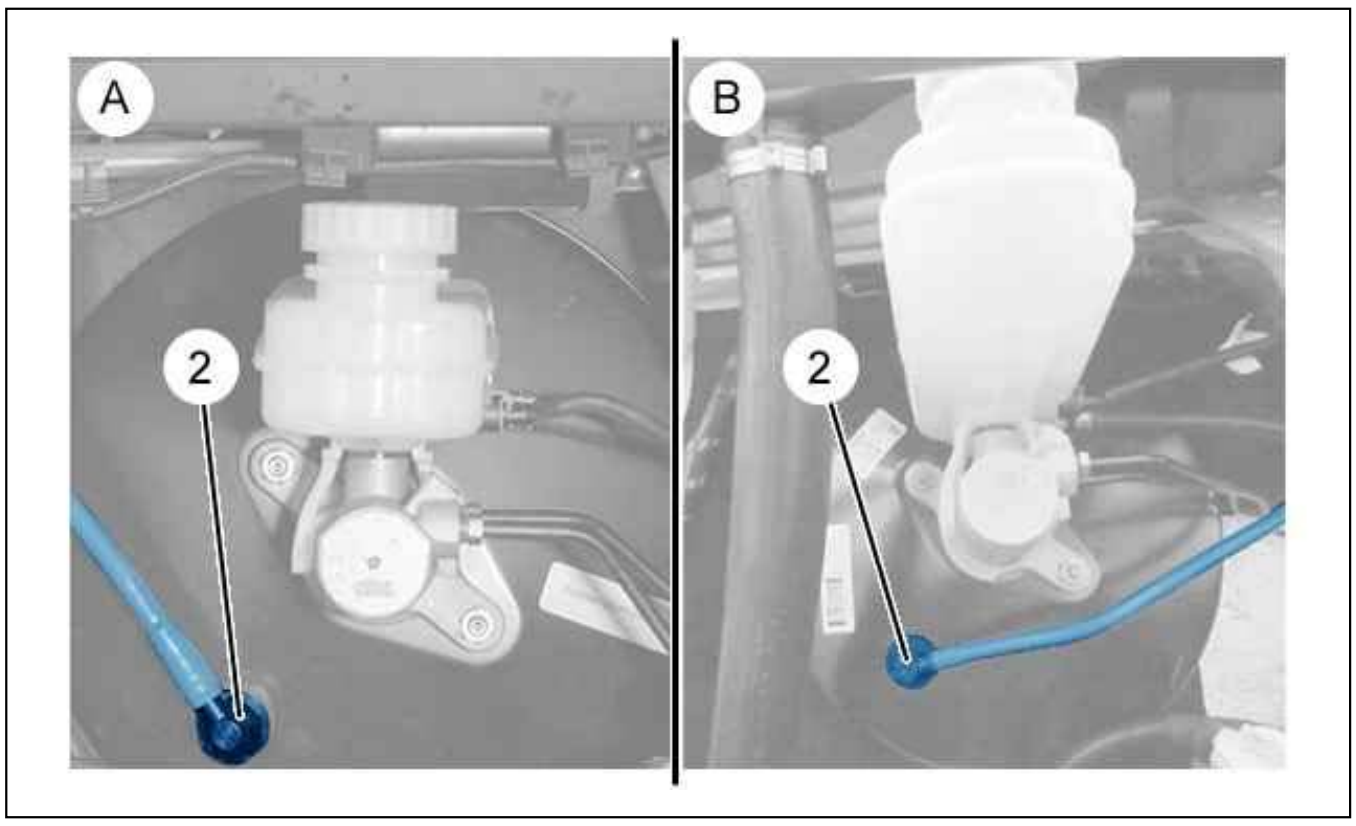

Figure : C5FG1GOD

"A" assembly : Left-hand drive .
"B" assembly : Right-hand drive .
Uncouple :

- The vacuum pipe (2) (according to equipment)
- The vacuum pipe (2) and vacuum sensor assembly (according to equipment)

Remove :

- The master-cylinder
- The stop lamp connector

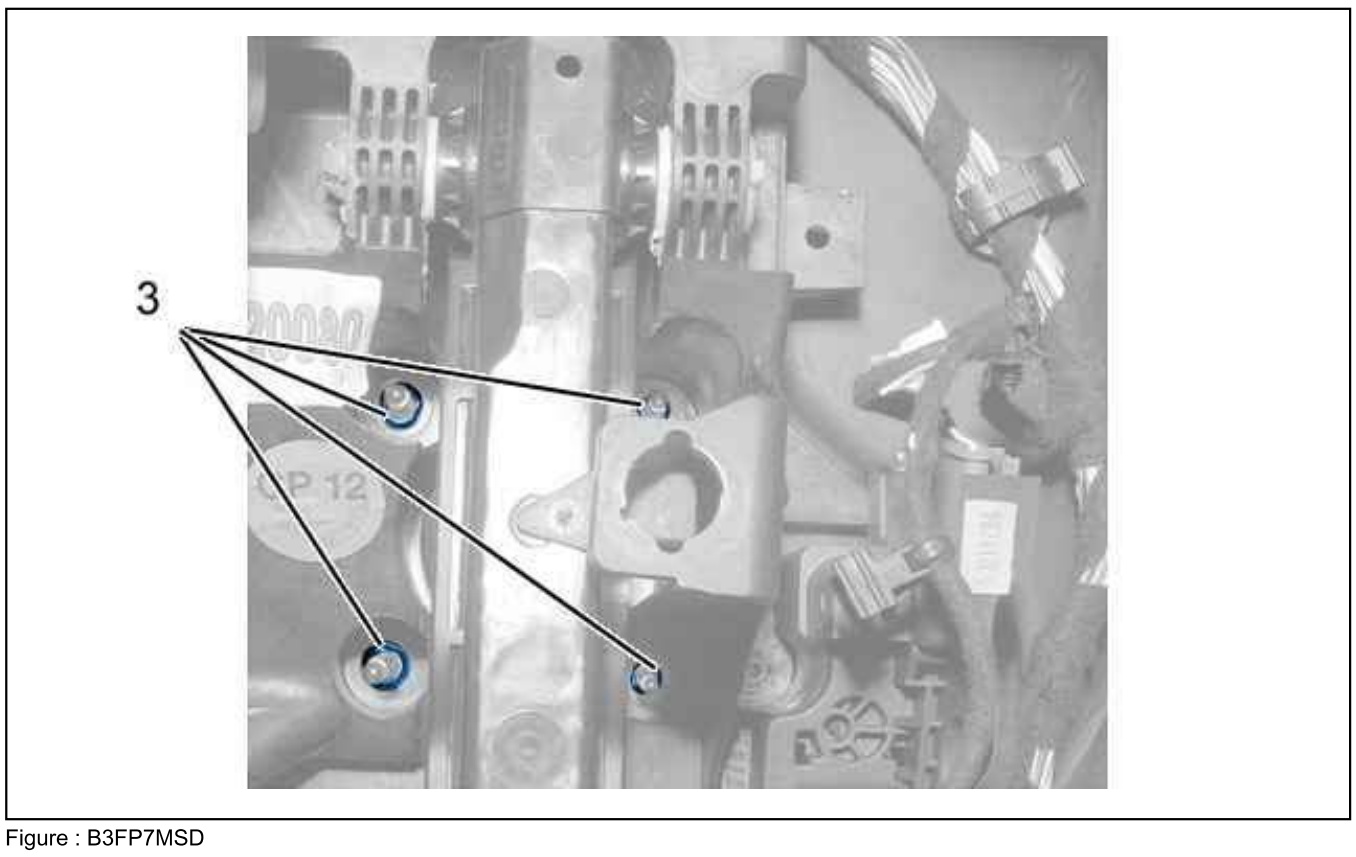

Figure : B3FP7MSD

Remove the nuts (3).

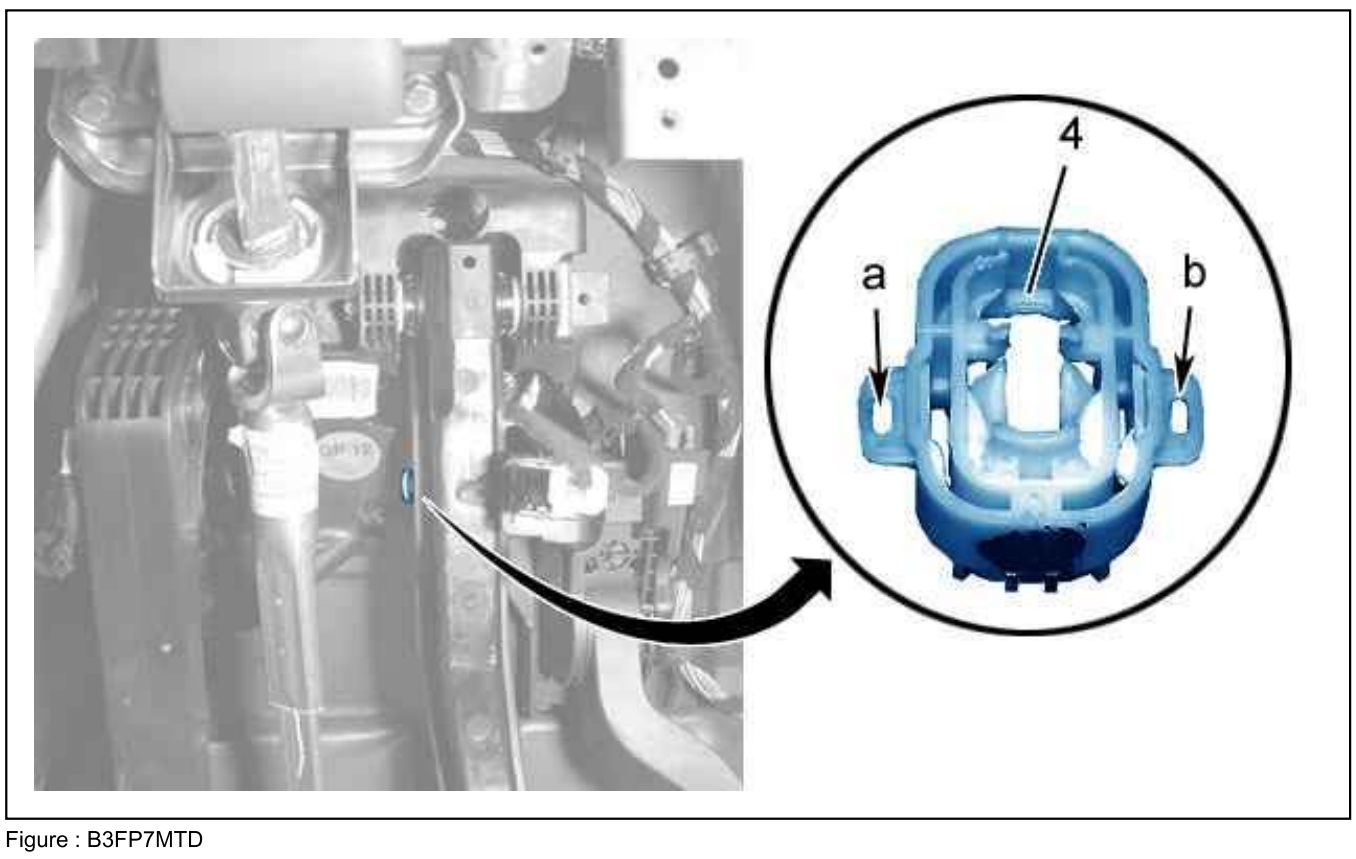

Figure : B3FP7MTD

While holding the brake pedal rearwards, release the retaining clip (4) (at "a", "b").
Remove the brake servo unit.

2. Refitting

CAUTION : Adhere to the tightening torques .

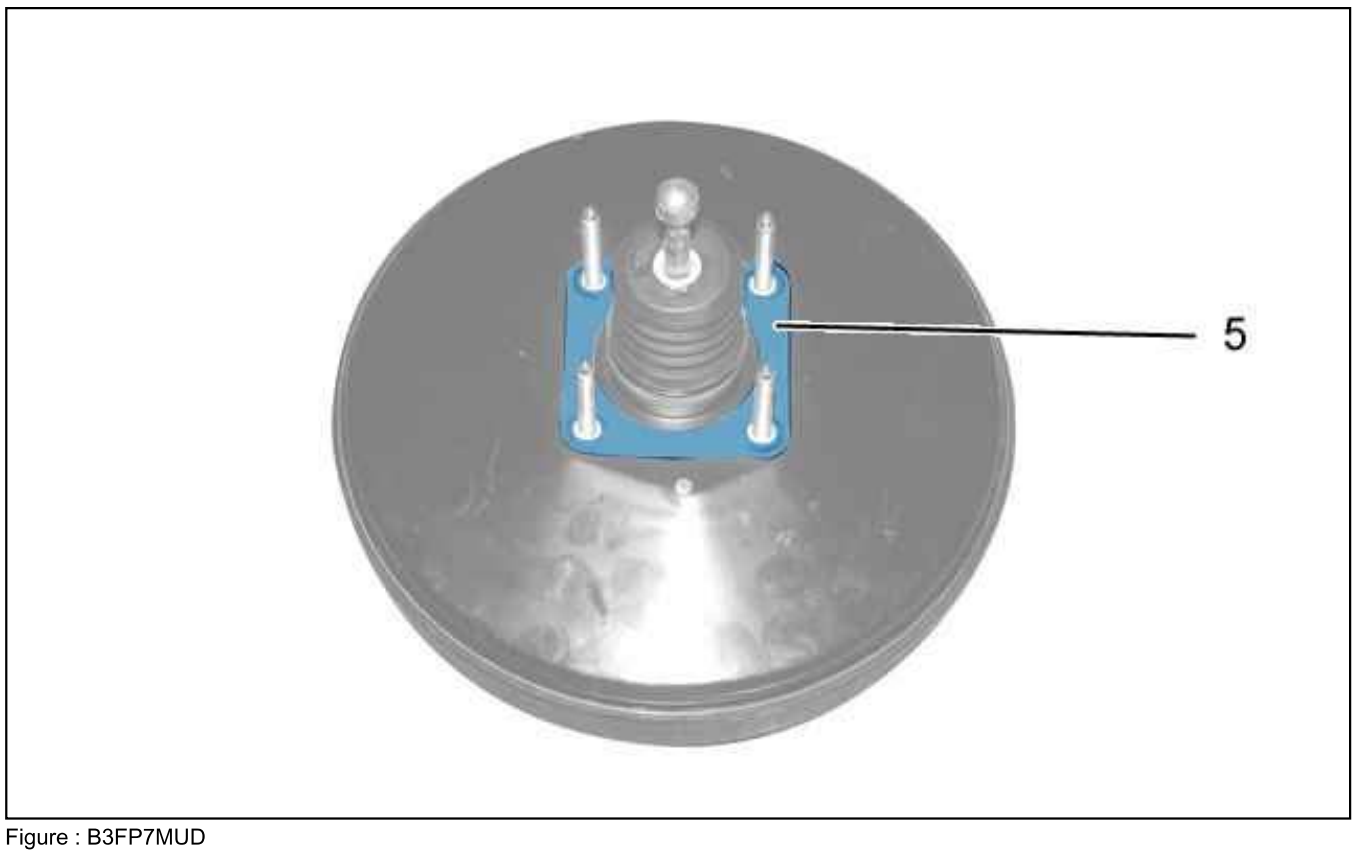

Figure : B3FP7MUD

Fit a new seal (5).

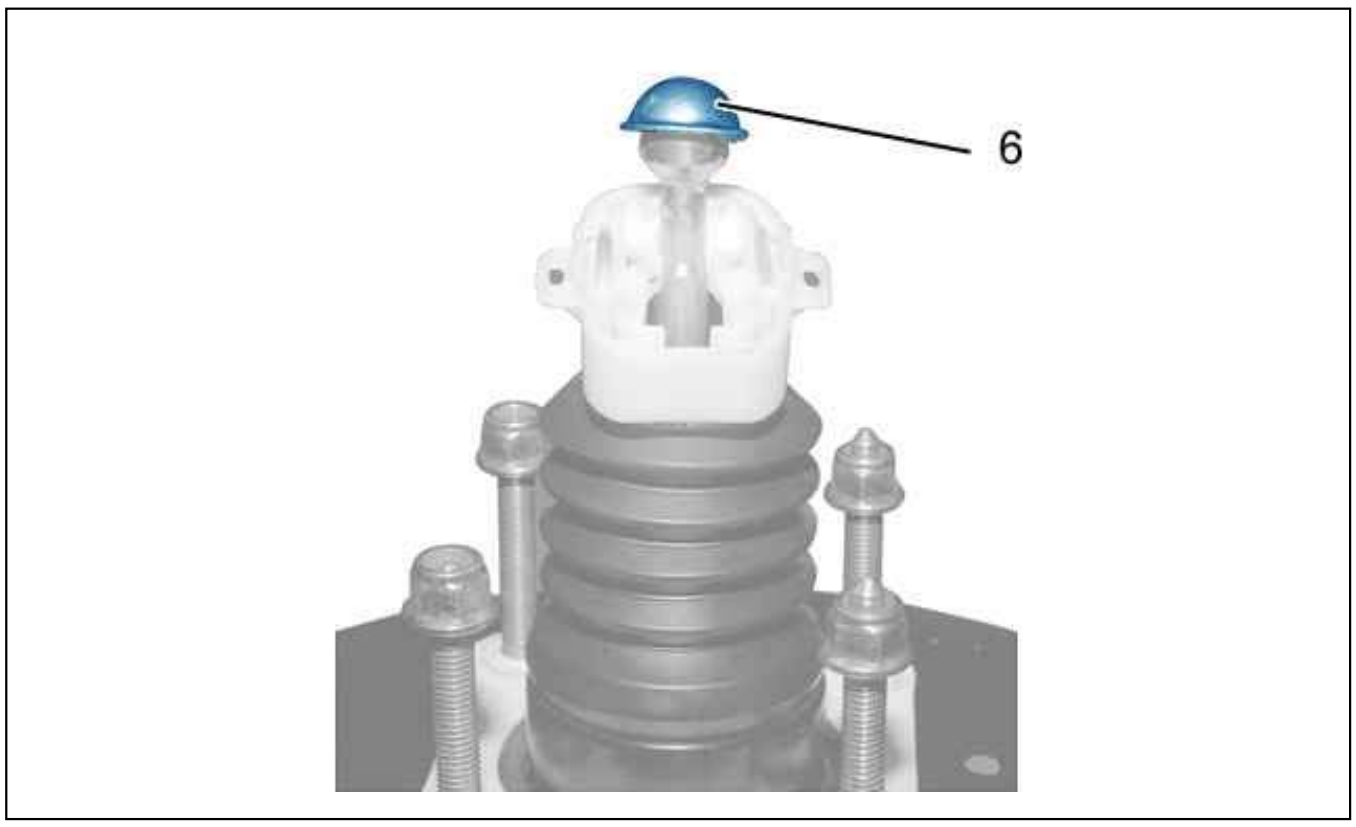

Figure : B3FP7MVD

Grease and position the ball-joint cover (6).
Refit the brake servo .
Couple the retaining clip (4).
Refit :

- The nuts (3)
- The stop lamp connector
- The master-cylinder

Couple up :

- The vacuum pipe (2) (according to equipment)
- The vacuum pipe (2) and vacuum sensor assembly (according to equipment)

Refit lower trim panel (1).

ESSENTIAL : Fill and bleed the braking system .

DRAINING - FILLING - BLEEDING : BRAKE CIRCUIT

ESSENTIAL : Observe the safety and cleanliness recommendations .

1. Tooling

A bleed unit approved by the manufacturer.
A diagnostic tool.

2. Drain - refill

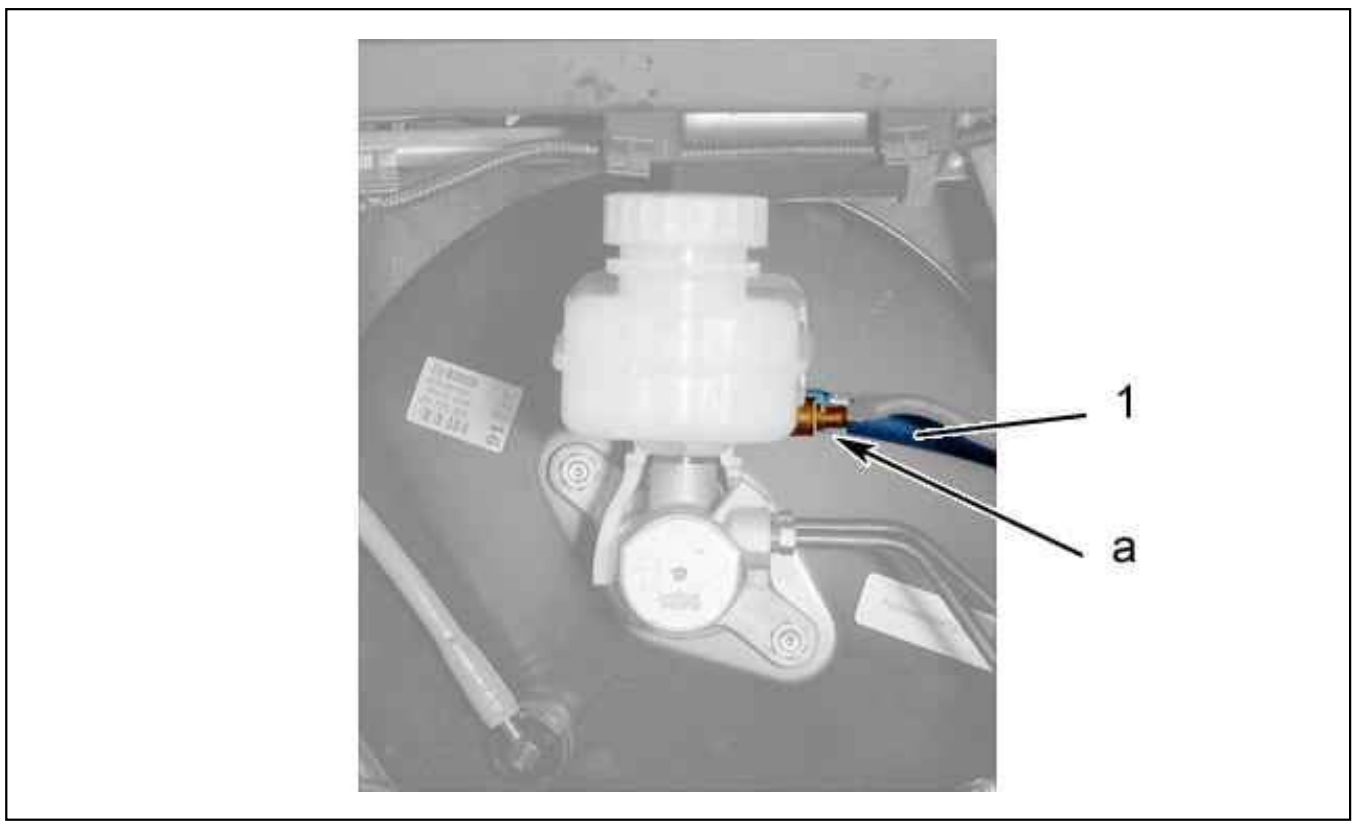

Figure : B3FP7N8D

Disconnect the connector (at "a").
Uncouple the pipe (1).
Remove :

- The brake fluid reservoir cap
- The brake fluid reservoir filter

Drain the brake fluid reservoir as completely as possible ; Using a syringe.
Withdraw the reservoir from its two outlets by pulling upwards.
Empty the brake fluid reservoir .
Clean the brake fluid reservoir.
Refit the brake fluid reservoir.
Couple the pipe (1).

N.B. : Fit a new clic clip .

Reconnect the connector (at "a").

CAUTION : Use only approved and recommended hydraulic fluids.

Fill the brake system reservoir.
Bleed the brake system.

3. Bleeding the brake system

CAUTION : During the bleeding operation : Keep the fluid topped up in the reservoir and complete it. Use new brake fluid only.

Bleed the primary brake circuit during a conventional operation.
Bleed the secondary brake circuit in the following cases :

- Venting the secondary brake circuit
- Starting the pump
- supply to the electrovalves

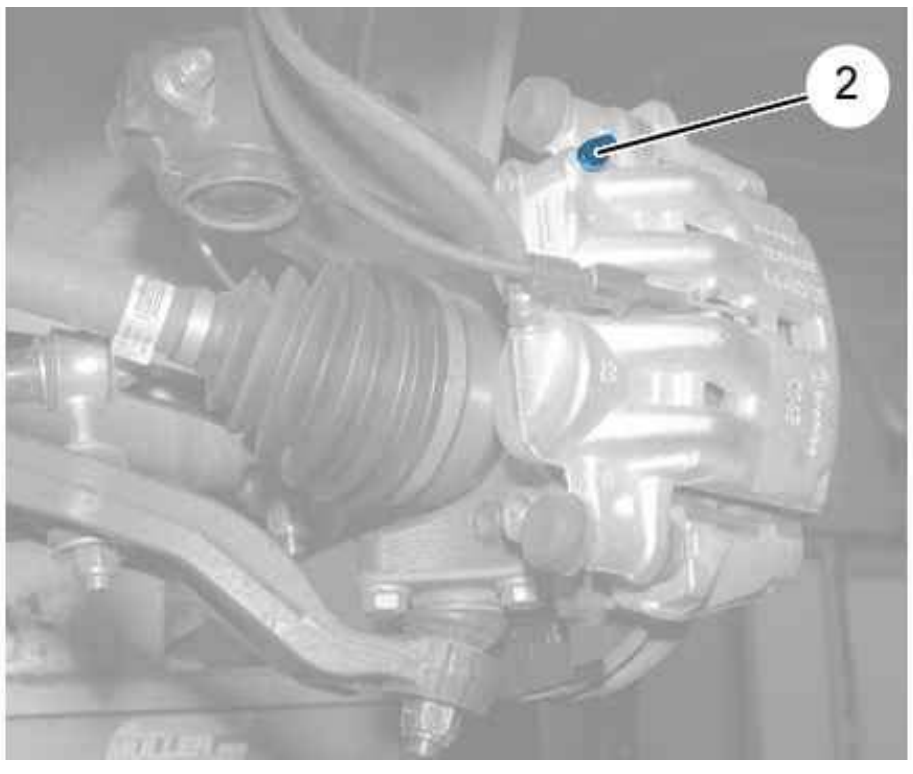

Figure : B3FP7N9D

front brake caliper : bleed screw(s) (2).

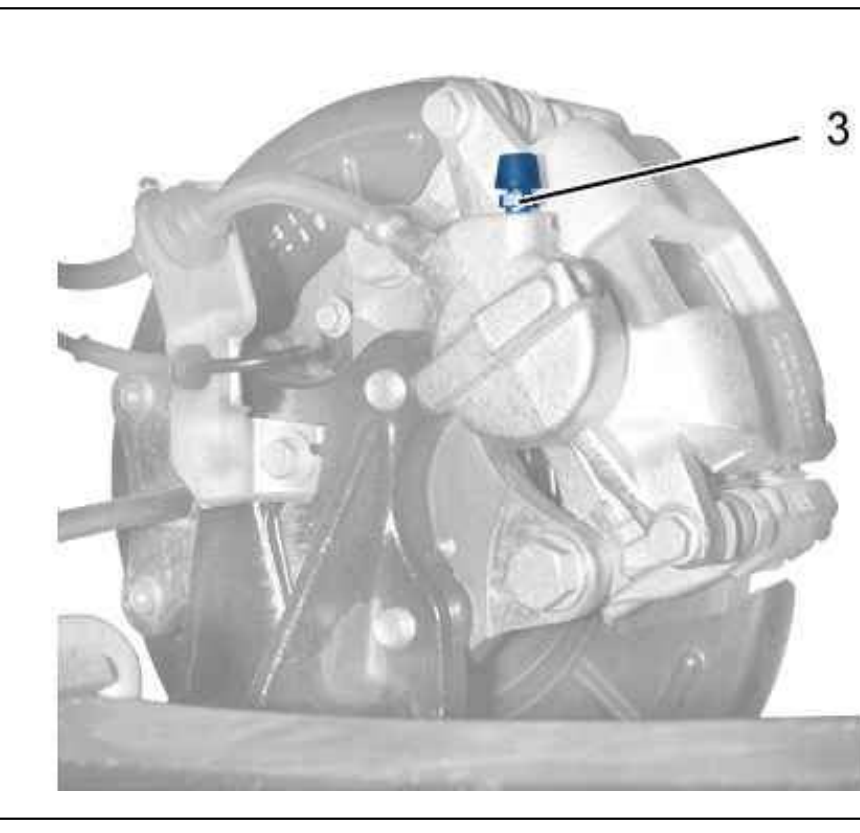

Figure : B3FP7NAD

rear brake caliper : bleed screw(s) (3).

3.1. Bleeding the primary braking circuit

CAUTION : The ABS system must not be in operation during the bleeding procedure.

Use a bleed tool approved by the manufacturer.

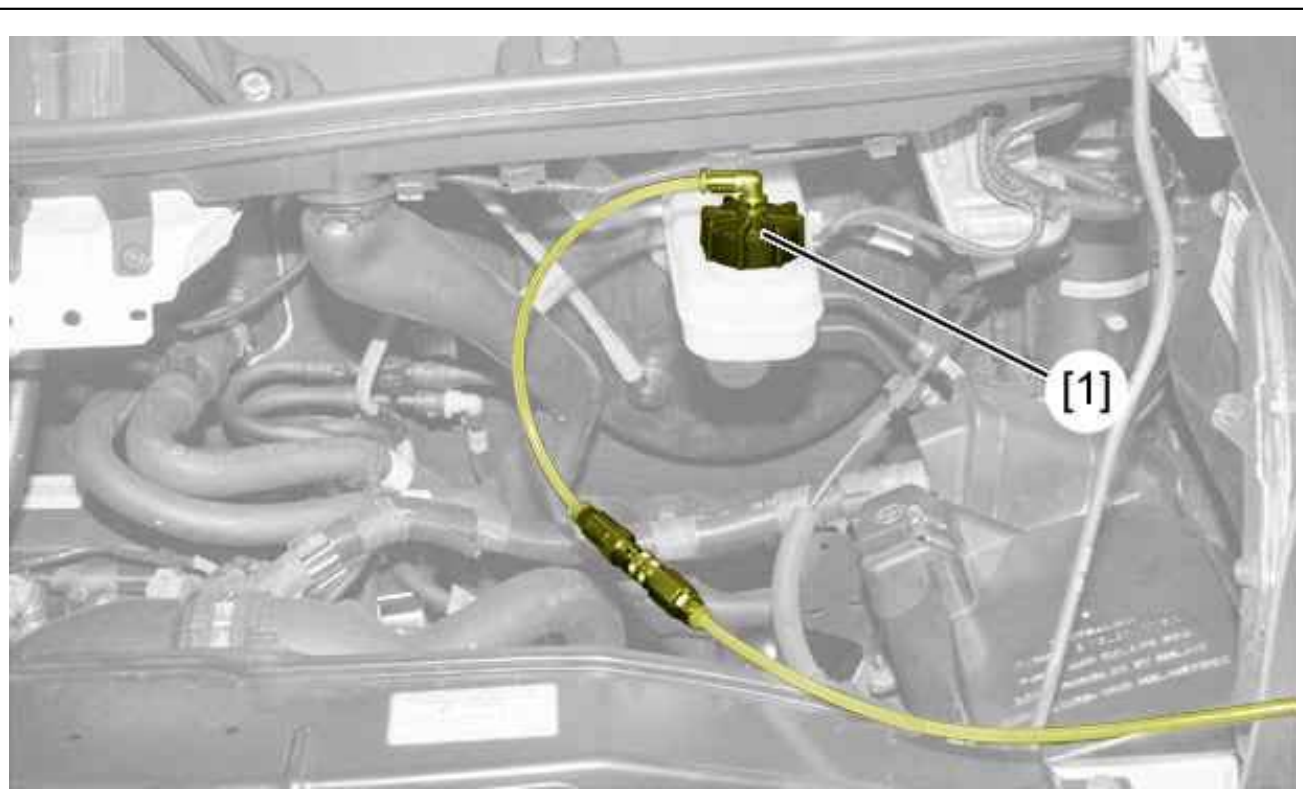

Figure : B1BPRWAD

Connect the bleeding apparatus [/] on the brake fluid reservoir .

Set the pressure of the equipment to 2 bars.
Bleeding order :

- RH rear
- Left hand front
- Left hand rear
- Right hand front

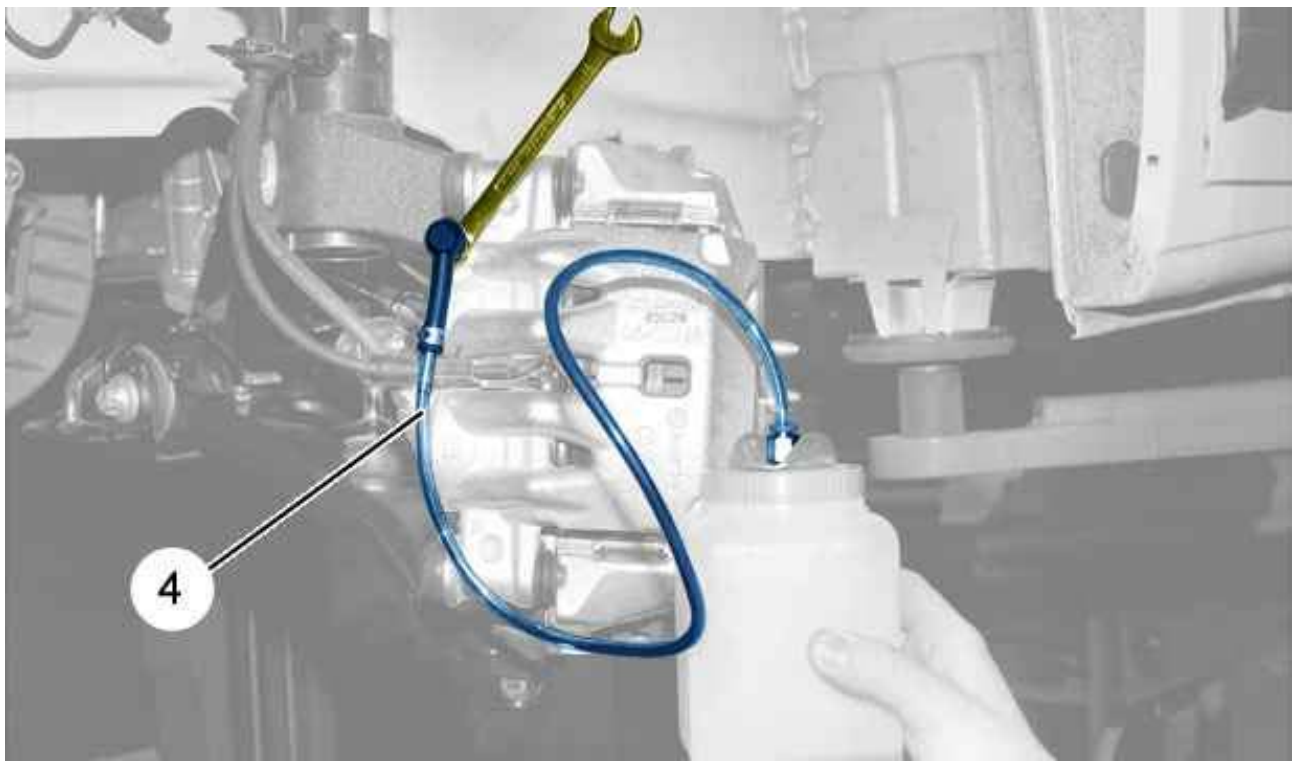

Figure : B3FP7NBD

CAUTION : Proceed bolt by bolt in the order shown.

Perform the following operations :

- Couple a transparent pipe (4) to the bleed screw
- Submerge the other end of the tube into a clean receptacle
- Open the bleed screw
- Wait for the liquid to flow without air bubbles
- Close the bleed screw

Remove the bleeding equipment .
Check the brake fluid level (between the "MIN" level and the "MAX" level).
If necessary, fill with approved and recommended synthetic brake fluid.

CAUTION : Any operation which may cause the pump to start or energize electrovalves is to be avoided (the system has been pre-filled and bled).

3.2. Bleed the secondary brake circuit (ABS/ESP hydraulic block)

N.B. : The equipment to be bled is always connected to the brake fluid reservoir.

Select a diagnostic tool.
Connect the diagnostic tool.
From the screen of the diagnostic tool, select the menu : "ABS PURGE".
Follow the instructions on the diagnostic tool.
Bleed the brakes observing the order indicated (ABS type bleeding operation).
At the end of the bleed programme, check and top up, if necessary, the brake fluid level.
Check the brake pedal travel (no extension), otherwise repeat the bleeding procedure.
Remove the tools.

TECHNICAL NOTE : ENGINE OIL CAPACITIES

CAUTION : Always check the oil level using the dipstick.

Oil change interval : Refer to the maintenance schedule.

N.B. : Values given as an indication.

1. Petrol engines

1.1. Engines types EW

Engine type	EW7A - EW10A	EW7J4 - EW10J4 - EW10D - EW12J4 - EW12A	EW10J4S
Oil capacity without replacement of the filter cartridge	4,75 litres	4 litres	5 litres
Oil capacity with replacement of the filter cartridge	5 litres	4,25 litres	5,25 litres
Capacity between minimum and maximum on the oil gauge	1,7 litre	1,7 litre	1,5 litre

1.2. Engines types EP

Engine type	EP3 - EP3C - EP6 - EP6C - EP6CB - EP6CM - EP6DT - EP6DTS - EP6CDT - EP6CDTM - EP6CDTMD - EP6CDTX
Oil capacity without replacement of the filter cartridge	4 litres
Oil capacity with replacement of the filter cartridge	4,25 litres
Capacity between minimum and maximum on the oil gauge	1,2 litre

1.3. 4A92 - 4B11 - 4B12 engines

	4A92	4B11	4B12
Oil capacity without replacement of the filter cartridge	4 litres		4,25 litres
Oil capacity with replacement of the filter cartridge	4,2 litres	4,3 litres	4,5 litres
Capacity between minimum and maximum on the oil gauge	-		

1.4. Engines types EB

Engine type	EB0 - EB2 - EB2M
Oil capacity without replacement of the filter cartridge	3 litres
Oil capacity with replacement of the filter cartridge	3,5 litres
Capacity between minimum and maximum on the oil gauge	1 litre

1.5. Engines types EC5

Engine type	EC 5M FF	EC 5M
Oil capacity without replacement of the filter cartridge	3 litres	
Oil capacity with replacement of the filter cartridge	3,25 litres	
Capacity between minimum and maximum on the oil gauge	1,5 litre	

1.6. 384F engine

Engine type	384F
Oil capacity without replacement of the filter cartridge	2,75 litres
Oil capacity with replacement of the filter cartridge	3 litres
Capacity between minimum and maximum on the oil gauge	1 litre

1.7. Engines types ES9

Engine type	ES9J4S	ES9A - ES9J4	ES9A
Engine legislative type	XFX	XFV - XFU - XFW	XFX
Oil capacity without replacement of the filter cartridge	5 litres	4,5 litres	4,25 litres
Oil capacity with replacement of the filter cartridge	5,25 litres	4,75 litres	4,5 litres
Capacity between minimum and maximum on the oil gauge	2 litres		

1.8. ET3J4 engine

Engine type	ET3J4
Oil capacity without replacement of the filter cartridge	2,75 litres
Oil capacity with replacement of the filter cartridge	3 litres
Capacity between minimum and maximum on the oil gauge	1,5 litre

1.9. Engines types TU

Engine type	TU1 - TU3	TU5 - TU9M
Oil capacity without replacement of the filter cartridge	2,75 litres	3 litres
Oil capacity with replacement of the filter cartridge	3 litres	3,25 litres
Capacity between minimum and maximum on the oil gauge	1,5 litre	1,5 litre

2. Diesel engines

2.1. Engines types DV

Engine type	DV4TD - DV4TED	DV4C - DV6A - DV6AU - DV6B - DV6BU - DV6TED4 - DV6C - DV6CM - DV6DTED - DV6DBM - DV6ETED - DV6ETEDM	DV6UTED4
Oil capacity without replacement of the filter cartridge	3,25 litres	3,25 litres	4,75 litres
Oil capacity with replacement of the filter cartridge	3,75 litres	3,75 litres	5 litres
Capacity between minimum and maximum on the oil gauge	1,8 litre	1,5 litre	1,5 litre

2.2. Engines types DW10

Engine type	DW10TD - DW10ATED4	DW10BTED4 - DW10UTED4
Oil capacity without replacement of the filter cartridge	4,5 litres	5 litres
Oil capacity with replacement of the filter cartridge	4,75 litres	5, 25 litres
Capacity between minimum and maximum on the oil gauge	1,4 litre	2 litres

Engine type	DW10CTED4	DW10CTED4
RPO number	To 11918	From 11919

Colour : dipstick	Handle : Yellow	Handle : Orange
Engine type	DW10CTED4	
Engine legislative type	RHD-RHE-RHH	
Oil capacity without replacement of the filter cartridge	5,25 litres	4,75 litres
Oil capacity with replacement of the filter cartridge	5,5 litres	5 litres
Capacity between minimum and maximum on the oil gauge	1,7 litre	1 litre

Engine type	DW10CD - DW10CE	DW10DTED4
Engine legislative type	AHZ - AHY	RHB
Oil capacity without replacement of the filter cartridge	4,75 litres	
Oil capacity with replacement of the filter cartridge	5 litres	
Capacity between minimum and maximum on the oil gauge	1 litre	

2.3. Engines types DW12

Engine type	DW12C - DW12BTED4 - DW12UTED - DW12MTED4	DW12TED4
Oil capacity without replacement of the filter cartridge	5 litres	4,5 litres
Oil capacity with replacement of the filter cartridge	5,25 litres	4,75 litres
Capacity between minimum and maximum on the oil gauge	1,7 litre	

2.4. F30DTE engine

Engine type F30DTE		
	EURO 4	EURO 5
Oil capacity without replacement of the filter cartridge	7,6 litres	8 litres
Oil capacity with replacement of the filter cartridge	8,6 litres	9 litres
Capacity between minimum and maximum on the oil gauge	1 litre	1 litre

2.5. DT17ted4 engine

Engine type DT17TED4		
Designation	By gravity	By suction
Oil capacity without replacement of the filter cartridge	5,25 litres	5,5 litres
Oil capacity with replacement of the filter cartridge	5,5 litres	5,75 litres
Capacity between minimum and maximum on the oil gauge	1,75 litre	1,75 litre

2.6. Engines types F28

Engine type F28D - F28DT - F28DTCR - F28DTSE		
Designation	8140.63 - 8140.43-	8140.23 - 8140.43 S
Oil capacity without replacement of the filter cartridge	6 litres	7 litres
Oil capacity with replacement of the filter cartridge	4,7 litres	5,7 litres
Capacity between minimum and maximum on the oil gauge	-	-

2.7. 4N13 engine

Engine type	4N13
Oil capacity without replacement of the filter cartridge	5 litres
Oil capacity with replacement of the filter cartridge	5,3 litres

2.8. DW8 engine

Engine type DW8		
Designation	Without air conditioning	With air conditioning
Oil capacity without replacement of the filter cartridge	4,5 litres	4,25 litres
Oil capacity with replacement of the filter cartridge	4,75 litres	4,5 litres
Capacity between minimum and maximum on the oil gauge	1,5 litre	

2.9. DT20C engine

Engine type DT20C		
Designation	By gravity	By suction
Oil capacity without replacement of the filter cartridge	6,1 litres	6,35 litres
Oil capacity with replacement of the filter cartridge	6,25 litres	6,5 litres
Capacity between minimum and maximum on the oil gauge	1,75 litre	

2.10. 2,3 SOFIM engine

Engine type	2,3 SOFIM
Oil capacity without replacement of the filter cartridge	5,9 litres
Oil capacity with replacement of the filter cartridge	6,5 litres
Capacity between minimum and maximum on the oil gauge	-

2.11. PUMA 2.2 DTE engine

Engine type PUMA 2.2 DTE						
	EURO 4			EURO 5		
Engine legislative type	4HV	4HU	4HM	4HG	4HH	4HJ
Oil capacity without replacement of the filter cartridge	5,75 litres			5,9 litres		
Oil capacity with replacement of the filter cartridge	6 litres			6,2 litres		
Capacity between minimum and maximum on the oil gauge	1,5 litre			1,5 litre		

2.12. F13DTE engine

Engine type	F13DTE
Oil capacity without replacement of the filter cartridge	3 litres
Oil capacity with replacement of the filter cartridge	3,2 litres
Capacity between minimum and maximum on the oil gauge	-

TECHNICAL NOTE : GENERAL ENGINE INFORMATION

1. Engine code



Figure : E1AB07LD

(1) : First 2 characters of the engine code.

First 2 characters	engine	Commercial designation
CF-	384F	1,0 l 12V
ZM-	EB0	1.0 i VTI
HF-	TU1	1,1 l
HM-	EB2	1.2 i 16v VTI
KF- K6-	TU3	1,4 l
KF-	ET3	1.4 16V
NF- N6-	TU5	1.6 16V
NF-	EC5	1.6 l 16V
NK-	4A92	1,6 l 16V
AF-	4B11	2,0 l 16V
SF-	4B12	2,4 l 16V
8F-	EP3	1.4 VTi 16V
5F-	EP6	1.6 VTi 16V

		1.6 THP 16V
6F-	EW7	1,8 l 16V
RF-	EW10	2,0 l 16V
3F-	EW12	2,2 l 16V
XF-	ES9	V6 3,0 l 24V
8H-	DV4	1,4 l HDi
9H-	DV6	1,6 l HDi
6H-	4N13	1,8 l HDI
RH-	DW10	2.0 HDi 16v
4H-	DW12	2.2 HDi 16v
	P22DTE	2.2 HDI (Puma) engine type
F1-	F30DT	3.0 HDi (Sofim engine type)
UH-	DT17	2.7 HDi 24v
X8-	DT20	3.0 HDi 24v

2. petrol engines

	384F	EB0	TU1	TU3						
Engine legislative type	CFA	ZMZ	HFX/ HFV	KFX	KFV	K6D/ K6F	K6E	KFT	KFW	KFS
Capacity (cc)	998	999	1124	1360						
Bore (mm)	71	71	72	75						
Travel (mm)	84	84	69	77						
Maximum power : (KW EEC)	50	50	44	55	54	53		54	55	
Engine speed at max. power (r.p.m.)	6000	6000	5500		5400	5300	5400	5200	5500	
Maximum torque : (daNm EEC)	9,3	9,5	9,4	11,1	11,8				12	
Engine speed at max. torque (r.p.m.)	3600	3000	3300	3400	3300	3400	3300		3400	2800

	ET3	EB2	EB2 m	TU5						
Engine legislative type	KFU	HMZ	HMY	NFR	NFZ	N6A	NFV	NFV	NFU	NFS
Cubic capacity (cc)	1360	1199		1587						
Bore (mm)	75	75		78						
Travel (mm)	77	90,5		77						
Maximum power : (KW EEC)	65	60	52	66	65	78	70	80	90	
Engine speed at max. power (r.p.m.)	5250	5750	5500	5800	5600		5700	5800	6500	
Maximum torque : (daNm EEC)	13,3	11,8	11	13,2	13,5	14,2	13,5	14,7	14,3	
Engine speed at max. torque (r.p.m.)	3250	2750	3000	2500	3000	4000	3000	4000	3750	

	4A92	4B11		4B12	EP3/ EP3C	
Engine legislative type	NKZ	AFZ	AFY	SFZ/ SFY	8FS/ 8FP	8FR
Cubic capacity (cc)	1590	1998		2359	1397	
Bore (mm)	75	86		88	77	
Travel (mm)	90	86		97	75	
Maximum power : (KW EEC)	86	108	113	125	70	72
Engine speed at max. power (r.p.m.)	6000					
Maximum torque : (daNm EEC)	15,4	19,9	19,8	23,2	13,6	

Engine speed at max. torque (r.p.m.)	4000	4200	4250	4100	4000

	EP6/ EP6C			EP6DT/ EP6CDT				EP6DTS		
Engine legislative type	5FK	5FP/ 5FJ	5FW/ 5FS/ 5FL	5FT	5FX/ 5FN/ 5F4/ 5FE	5FV/ 5FR	5FM	5FY	5FF	5FD
Capacity (cc)	1598									
Bore (mm)	77									
Travel (mm)	85									
Maximum power : (KW EEC)	72	84	88	103	110	115	120	128	149	152
Engine speed at max. power (r.p.m.)	6000	5200	6000	5800	6000					
Maximum torque : (daNm EEC)	15,2	16		24					27,5	
Engine speed at max. torque (r.p.m.)	3500	4250		1400				1600	2000	

	EP6CDTS	EP6CDTX	EW7A		EW10A		
Engine legislative type	5FU	5FU	6FZ	6FY	RFN	RFH	RFJ
Capacity (cc)	1598		1749	1749	1997		
Bore (mm)	77		82,7	82,7	85		
Travel (mm)	85		81,4	81,4	88		
Maximum power : (KW EEC)	135	147	85	92	100	103	
Engine speed at max. power (r.p.m.)	6000	5800	5500	6000			
Maximum torque : (daNm EEC)	25,5	27,5	16	17	19	18	20
Engine speed at max. torque (r.p.m.)	1600	1700	4000	3750	4100	4000	

	EW12J4	ES9		EC5
Engine legislative type	3FZ	XFW	XFV	NFP
Capacity (cc)	2230	2946		1587
Bore (mm)	86	87		78,5
Travel (mm)	96	82,6		82
Maximum power : (KW EEC)	116	150	155	85
Engine speed at max. power (r.p.m.)	5650	6000		6000
Maximum torque : (daNm EEC)	21,7	28,5	29	15
Engine speed at max. torque (r.p.m.)	3900	3750		4000

3. diesel engines

	DV4					DV6				
Engine legislative type	8HT	8HX	8HS/ 8HP/ 8HR	8HZ	8HY	9HW	9HN/ 9HK	9HT	BHZ	BHY
Capacity (cc)	1398					1560				
Bore (mm)	73					75				
Travel (mm)	82					88,3				
Maximum power : (KW EEC)	40	50			66	55			84	73
Engine speed at max. power (r.p.m.)	4000					4000			3750	
Maximum torque : (daNm EEC)	13	15	16	16	20	17,5	18,5		30	25,4
Engine speed at max. torque (r.p.m.)	1750			2000	1750	1750	1500	1750		

	DV6	DW8

Engine legislative type	9HH/ 9HM	9HF/ 9HE	9HU	9HX/ 9HV	9HP/ 9HJ	9HY/ 9HZ	9HL	9HR	9HG	WJZ/ WJY
Capacity (cc)	1560									1868
Bore (mm)	75									82,2
Travel (mm)	88,3									88
Maximum power : (KW EEC)	66				68	80	82		84	51
Engine speed at max. power (r.p.m.)	4000									4600
Maximum torque : (daNm EEC)	18	21,5	18	21,5	23	24		27	25,4	12,5
Engine speed at max. torque (r.p.m.)	1500		1750				1500	1750		2500

	DW10									
Engine legislative type	RHV	RHY	AHY	RHS/ RHM	RHT	RHG/ RHK	RHL	AHZ	RHJ	RHR/ RHD
Capacity (cc)	1997									
Bore (mm)	85									
Travel (mm)	88									
Maximum power : (KW EEC)	62	66	72	79	80	88	93	94	100	100
Engine speed at max. power (r.p.m.)	4000									
Maximum torque : (daNm EEC)	19,2	20,5	26	25	27	30	32	32	27	32
Engine speed at max. torque (r.p.m.)	1900		1500	1750		2000				

	DW10				DW12				
Engine legislative type	RHF	RHE	RHH	RHC	4HW	4HN/ 4HK	4HP	4HR	4HT
Capacity (cc)	1997				2179				
Bore (mm)	85				85				
Travel (mm)	88				96				
Maximum power : (KW EEC)	103	110	120		94	115	120	120	125
Engine speed at max. power (r.p.m.)	4000	3750	3850	3750	4000				
Maximum torque : (daNm EEC)	32	34		30	31,4	38	37	40	37
Engine speed at max. torque (r.p.m.)	2000			1750	2000		1500	1750	1500

	DW12		DT17	DT20		P22DTE		
Engine legislative type	4HS	4HL	UHZ	X8Y	X8Z	4HV/ A	4HU/ B	4HM
Capacity (cc)	2179		2720	2993	2993	2198		
Bore (mm)	85		81	84		86		
Travel (mm)	96		88	90		94,6		
Maximum power : (KW EEC)	125	150		177	175	74	88	95
Engine speed at max. power (r.p.m.)	4000	3500	4000	3800		2900	3500	
Maximum torque : (daNm EEC)	40	45	44	50	45	25	32	
Engine speed at max. torque (r.p.m.)	1750	2000	1900		1600	1500	2000	

	F30DT	4N13
Engine legislative type	F1CE0481D	6HZ
Capacity (cc)	2998	1798
Bore (mm)	88	83
Travel (mm)	94	83,1
Maximum power : (KW EEC)	115	110
Engine speed at max. power (r.p.m.)	3500	4000

Maximum torque : (daNm EEC)	40	30
Engine speed at max. torque (r.p.m.)	1700	2000

4. Electric motors

	ION/C-Zero	Partner/Berlingo Venturi
Engine legislative type	ZKZ	-
Engine type	Triple-phase synchro motor	
Maximum power : (KW EEC)	49	42
Continuous power	35	-
Engine speed at max. power (r.p.m.)	2500 to 8000 rpm	-
Maximum torque : (daNm EEC)	18	
Engine speed at max. torque (r.p.m.)	0 to 2000 rpm	-

TECHNICAL NOTE : ANCILLARY DRIVE BELT

1. Flexible ancillary drive belt

ESSENTIAL : Before removal and for any future reuse of the removed belt, the engine must be at ambient temperature (below 30°C) ; In all other cases : Replace the flexible ancillary drive belt .

CAUTION : Mark the direction of rotation of the ancillary drive belt before removing it.

CAUTION : If re-using the existing accessories drive belt, refit it in the correct fitting direction.

CAUTION : Check that the rollers turn freely (no play and no tightness).

2. Visual check

Check that the timing belt is free of cracks and traces of oil.
Check the absence of oil leaks (crankshaft and camshaft sealing rings).
Check the absence of coolant fluid leaks (Coolant pump).
Check that the track of the engine speed sensor target is not distorted or scratched.

N.B. : Replace any defective parts.

3. Petrol engines

3.1. 384F engine

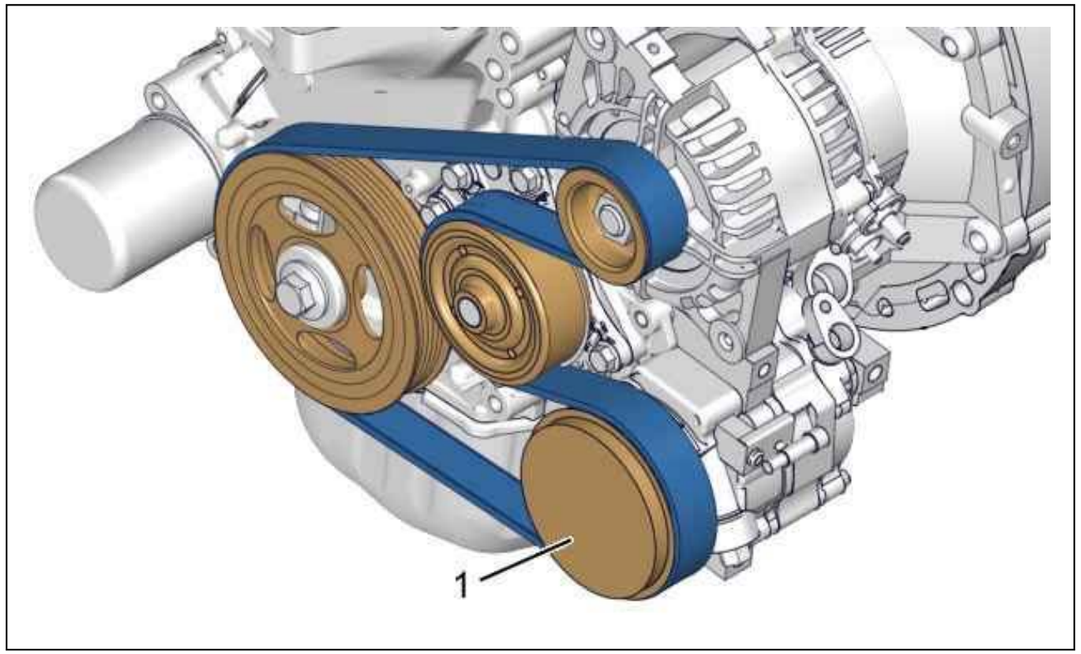

Figure : B1BB1E8D

all models.

(1) Air conditioning compressor (according to equipment).

3.2. TU1/TU3/TU5/ET3 engines

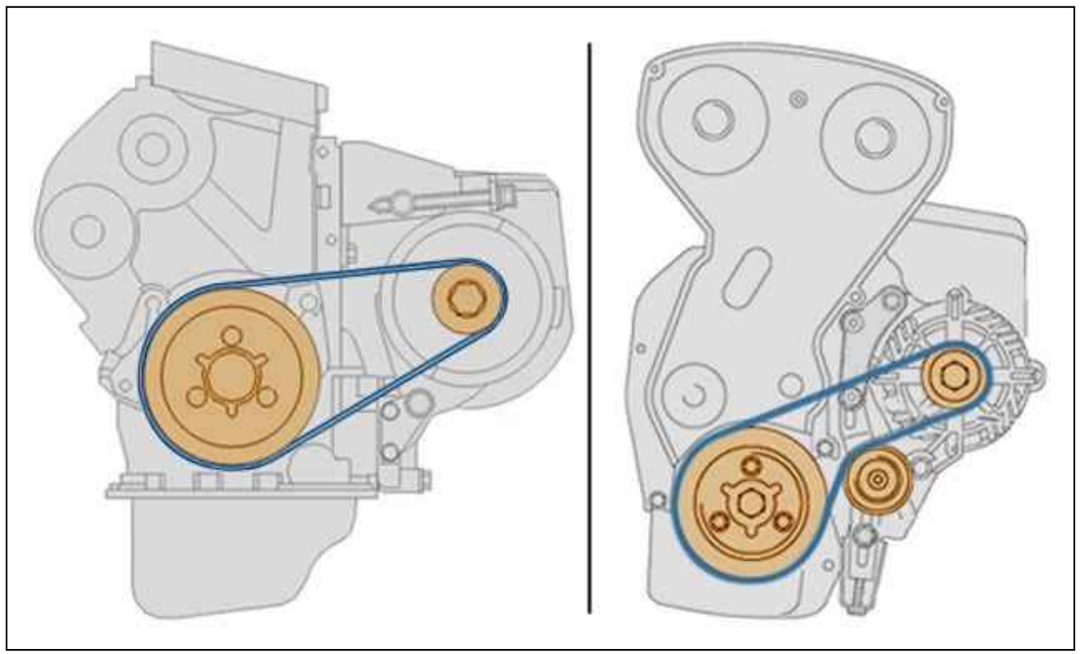

Figure : B1BB1E9D

Without power steering and without air conditioning.

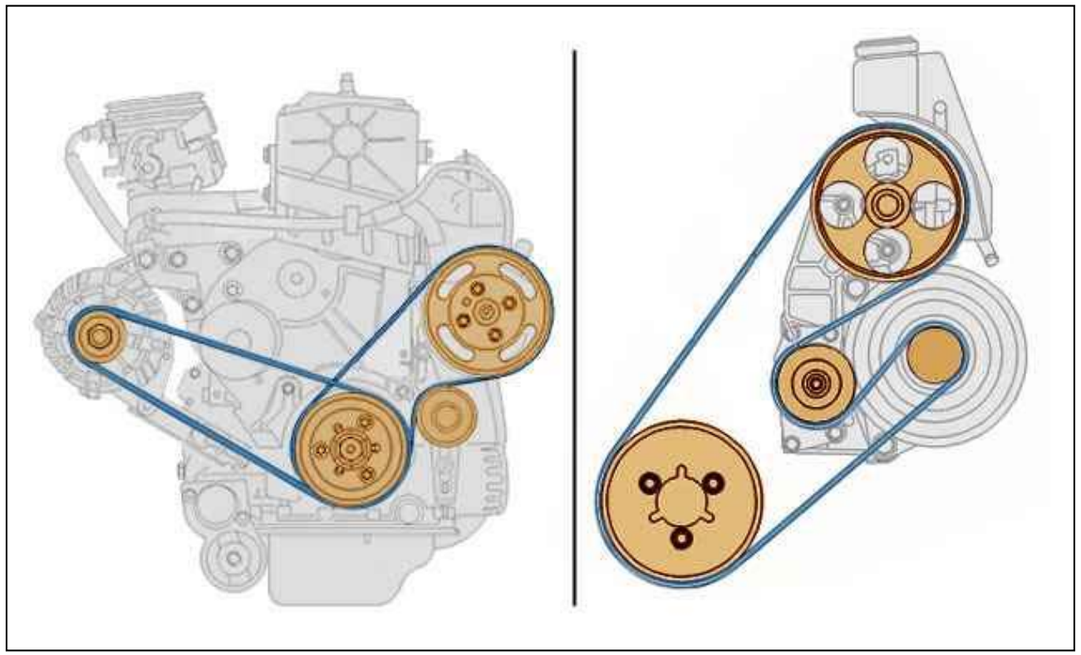

Figure : B1BB1EAD

Without air conditioning / With driven power steering pump.

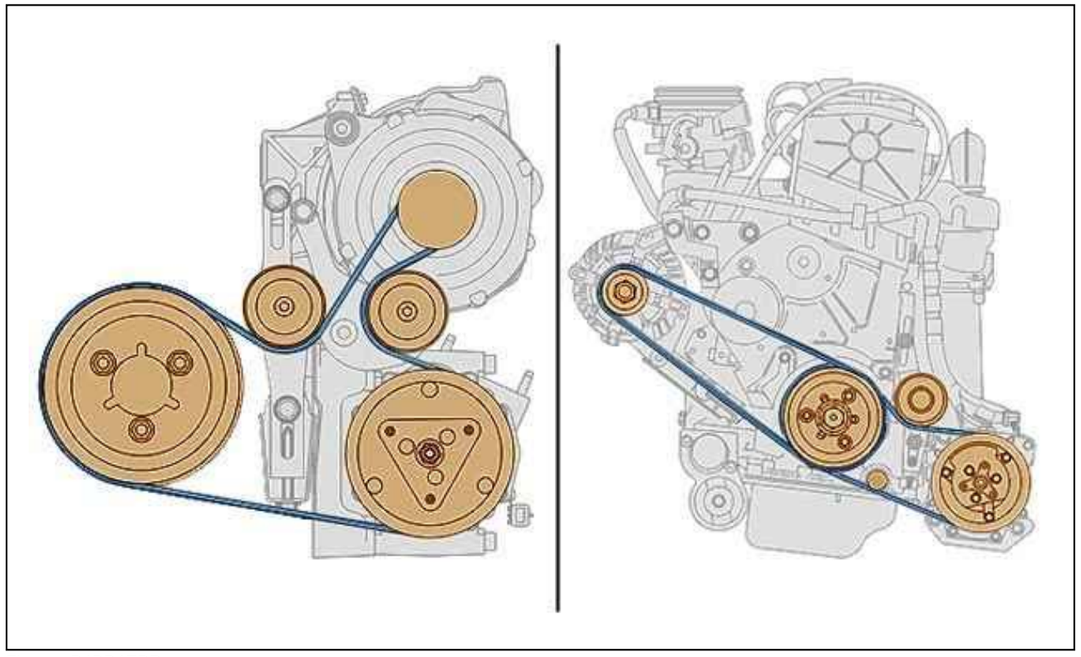

Figure : B1BB1EBD

With air conditioning and without power steering.

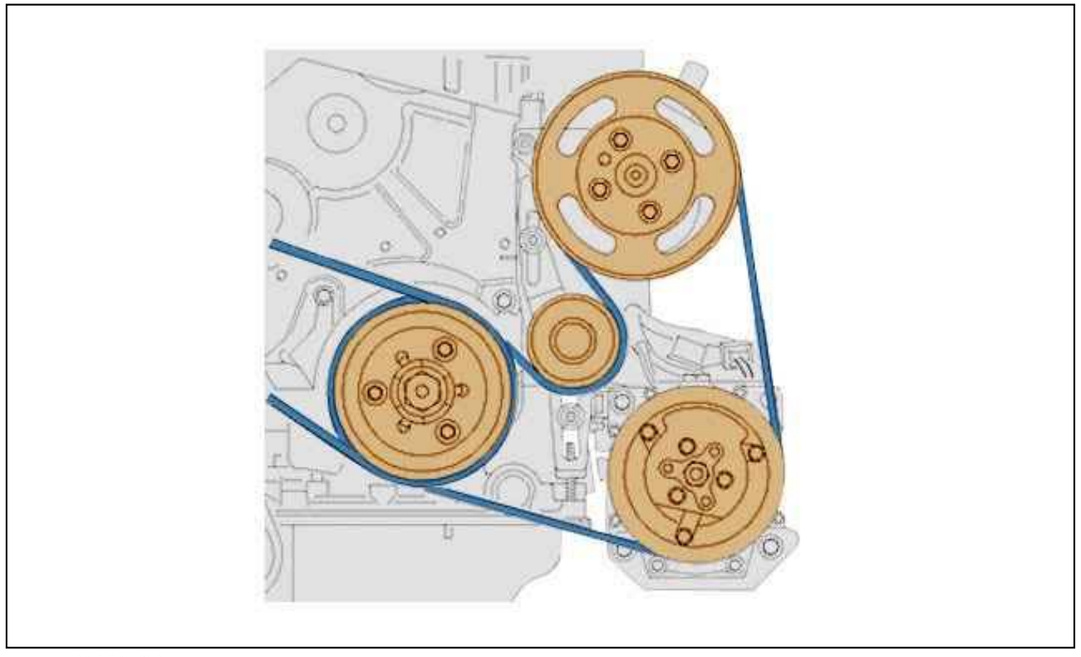

Figure : B1BB1ECD

With air conditioning / With driven power steering pump (Manual tension roller).

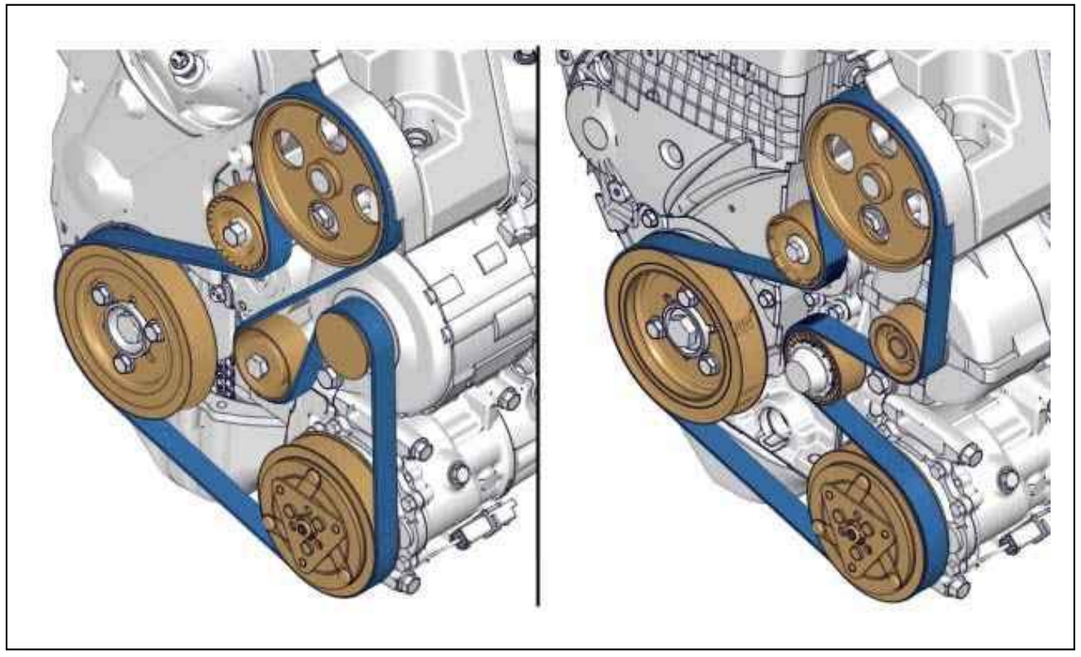

Figure : B1BB1EDD

With air conditioning / With driven power steering pump (Dynamic roller tensioner).

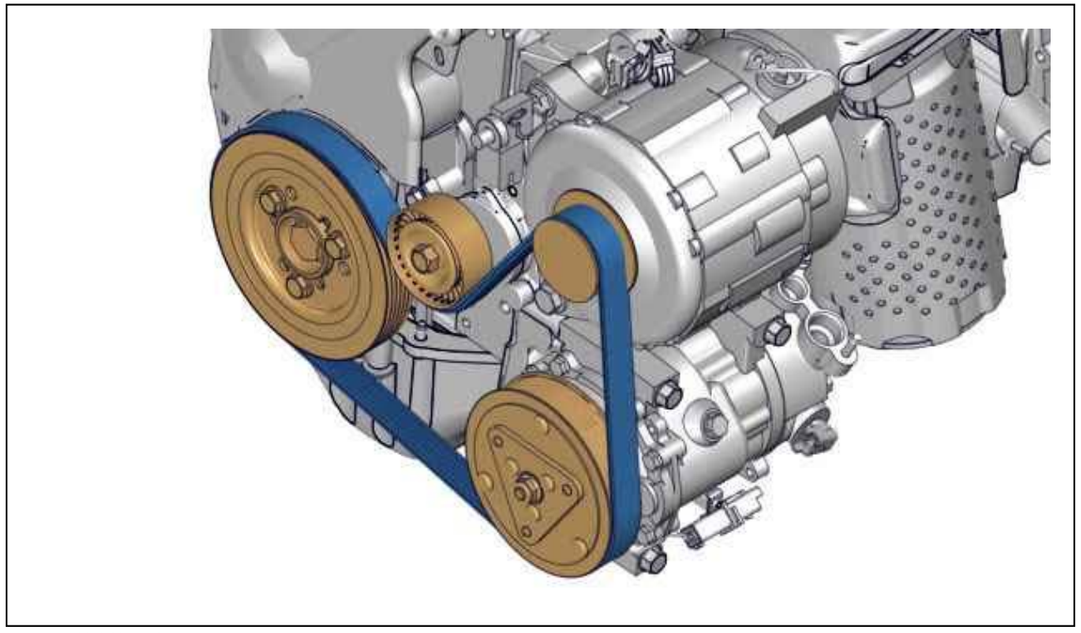

Figure : B1BB1EED

With air conditioning / Power steering electric pump assembly (Dynamic roller tensioner).

3.3. EB0/EB2 engines

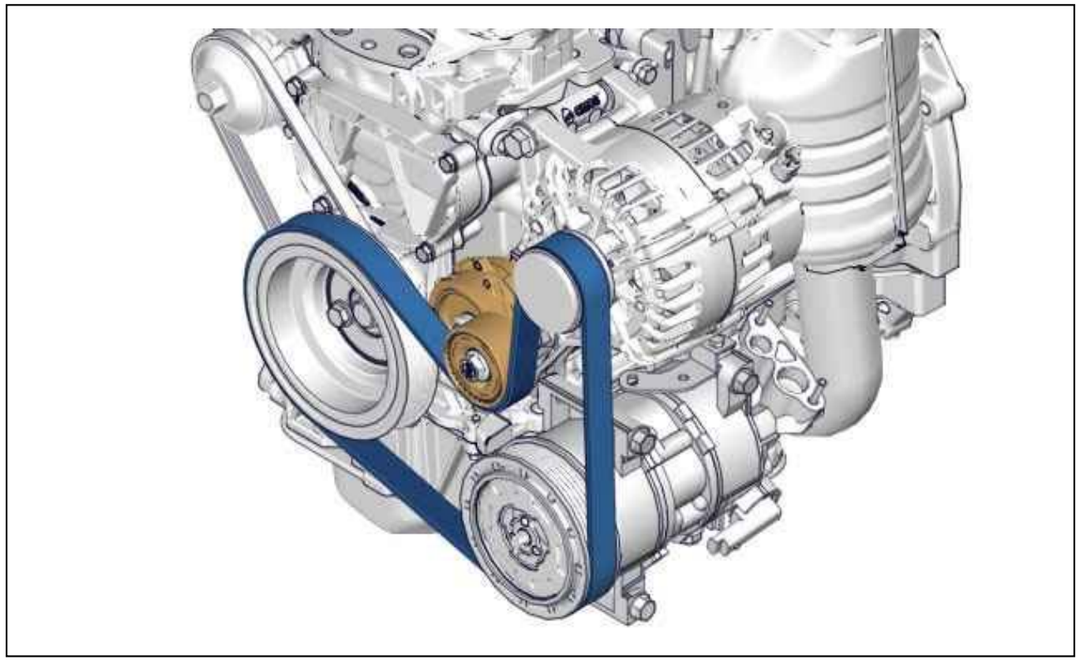

Figure : B1BB1LTD

With air conditioning.

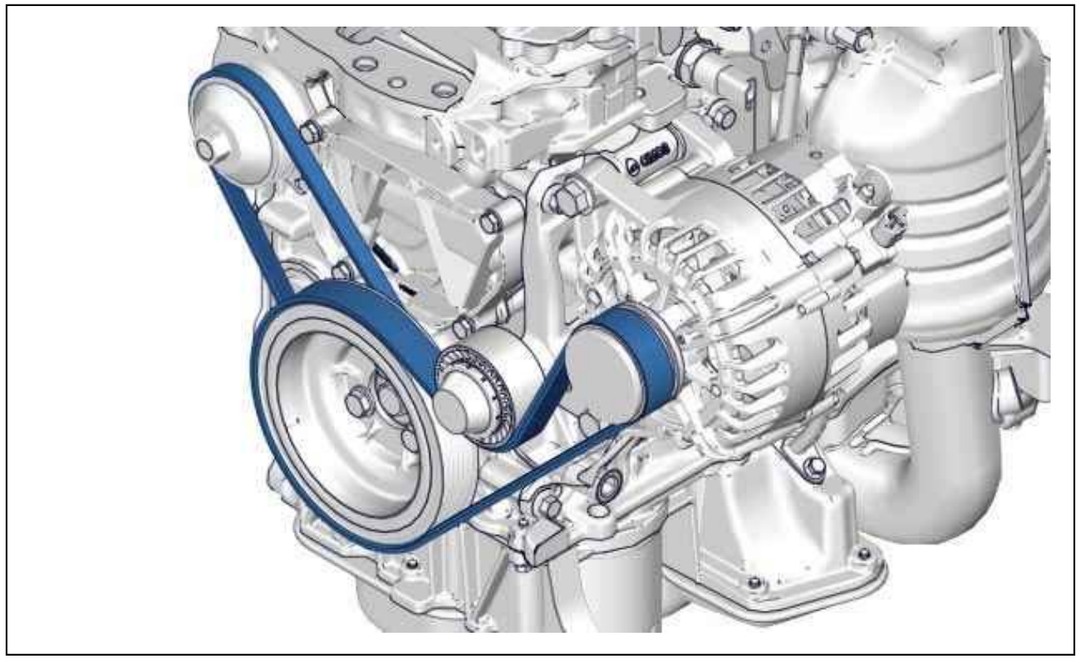

Figure : B1BB1LUD

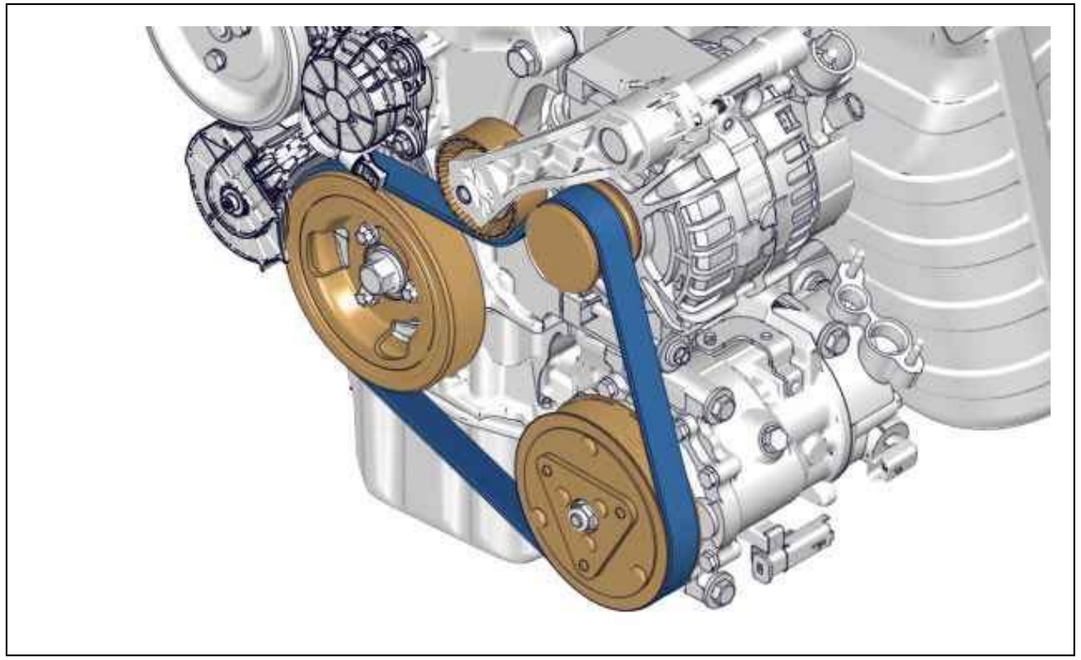

Without air conditioning.

3.4. EP3/EP6 engines

Figure : B1BB1EFD



all models.

(1) Air conditioning compressor (according to equipment).

3.5. EC5 engine

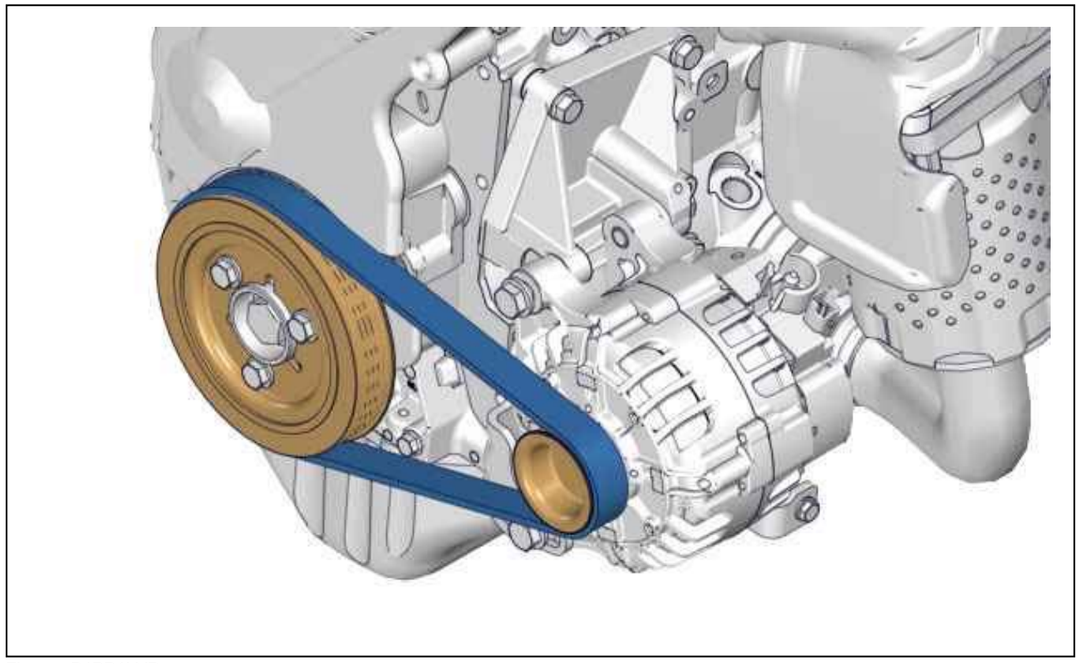

Figure : B1BB1LVD

Without air conditioning.

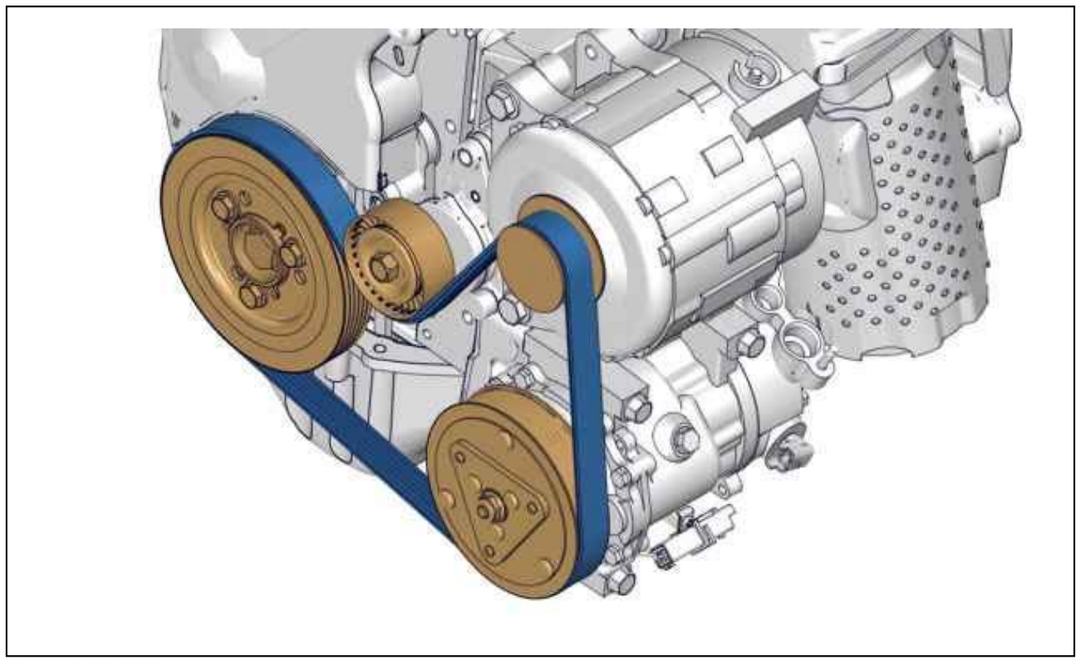

Figure : B1BB1LWD

With air conditioning.

3.6. EW7/EW10/EW12 engines

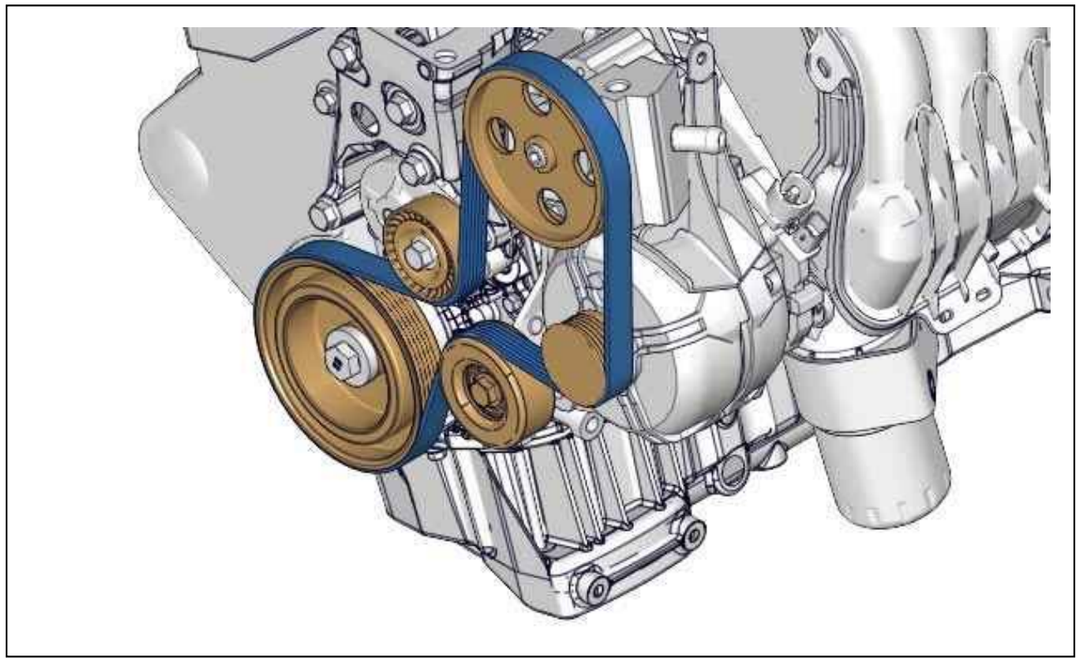

Figure : B1BB1EGD

Without air conditioning / With driven power steering pump.

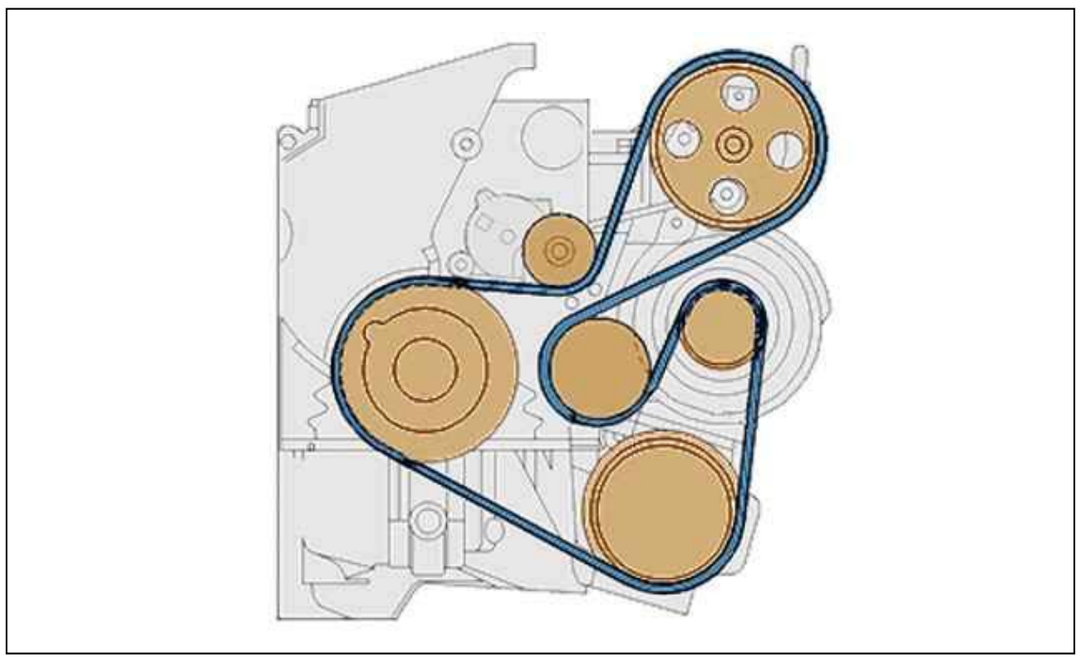

Figure : B1BB1EHD

With air conditioning / With driven power steering pump.

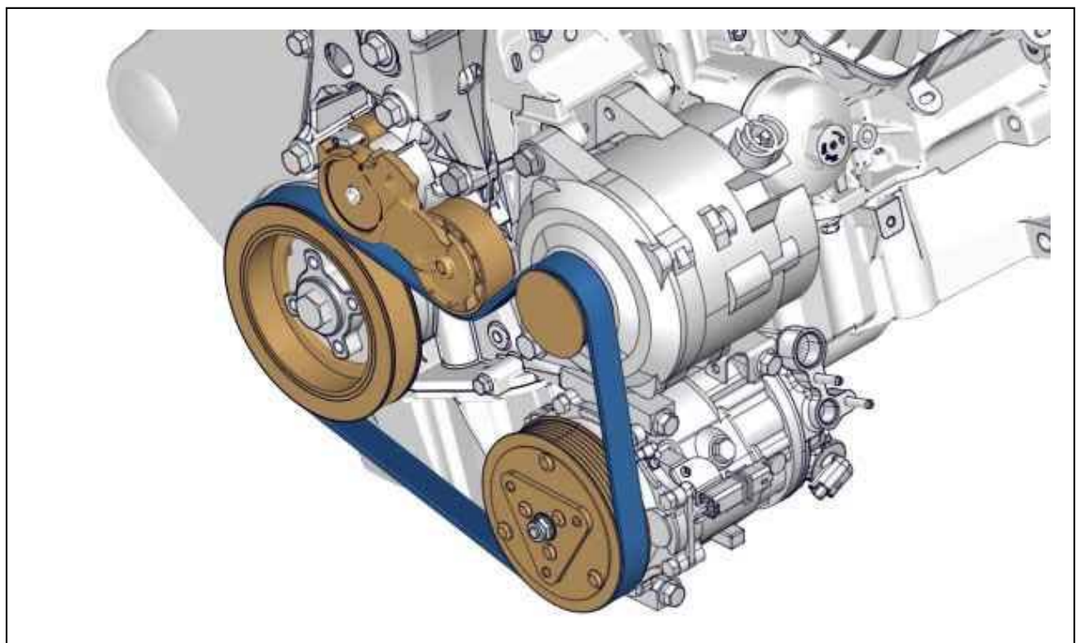

Figure : B1BB1EID

With air conditioning / Power steering electric pump assembly .
(1) : Air conditioning compressor (according to equipment).

3.7. 4A92 engine

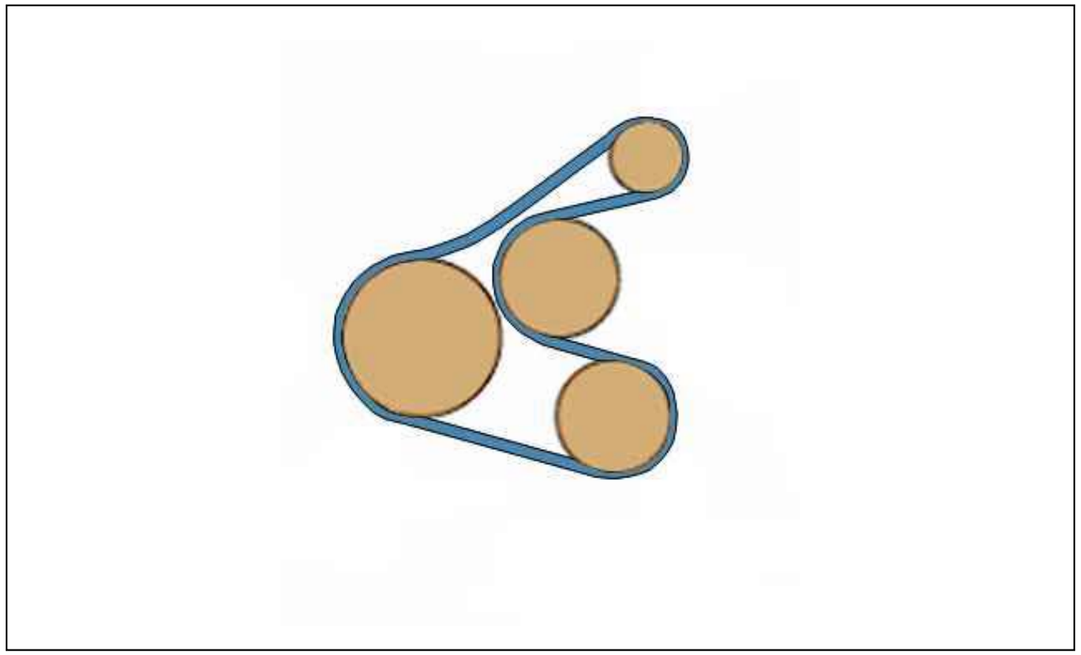

Figure : B1BB1IZD

all models.

3.8. 4B11 / 4B12 engines

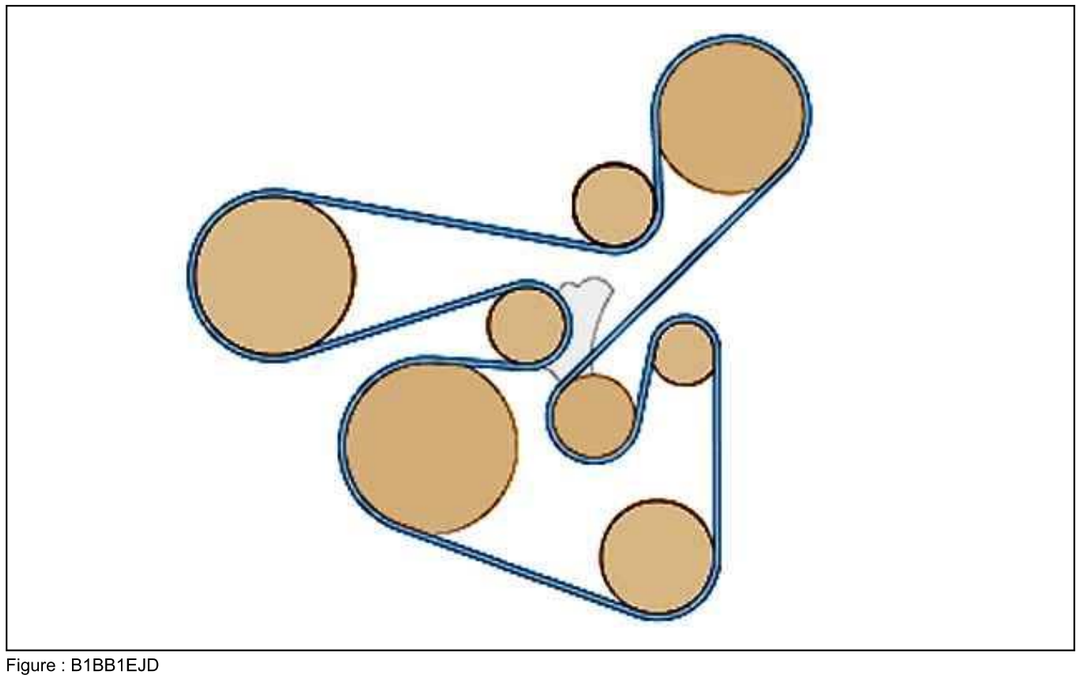

Figure : B1BB1EJD

all models.

3.9. ES9 engine

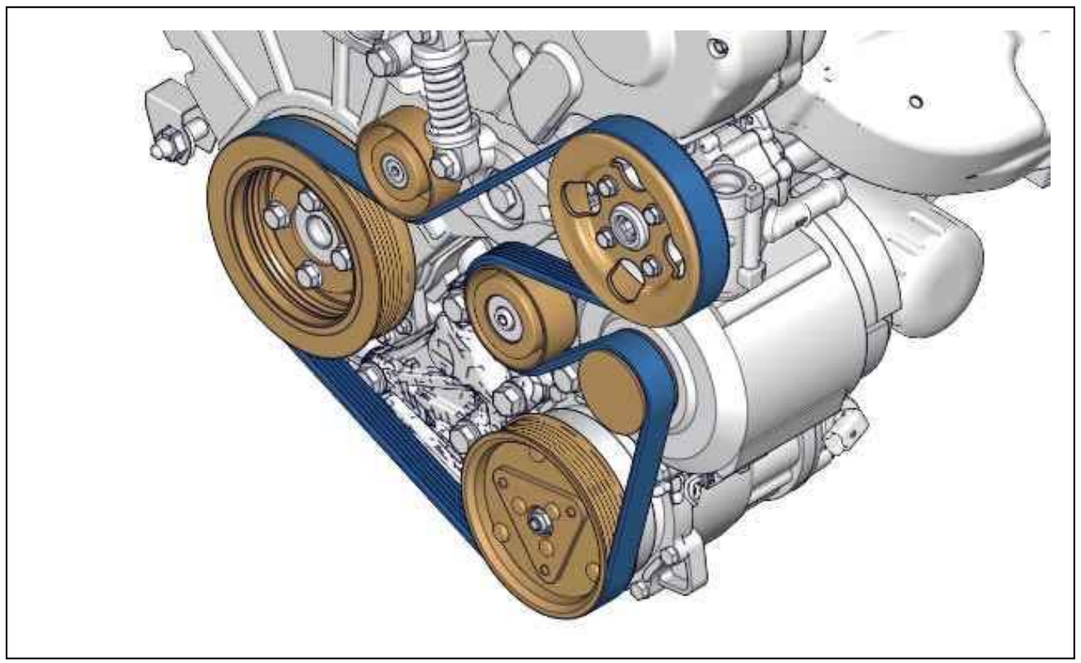

Figure : B1BB1EKD

all models.

4. diesel engines

4.1. DV4/DV6 engine

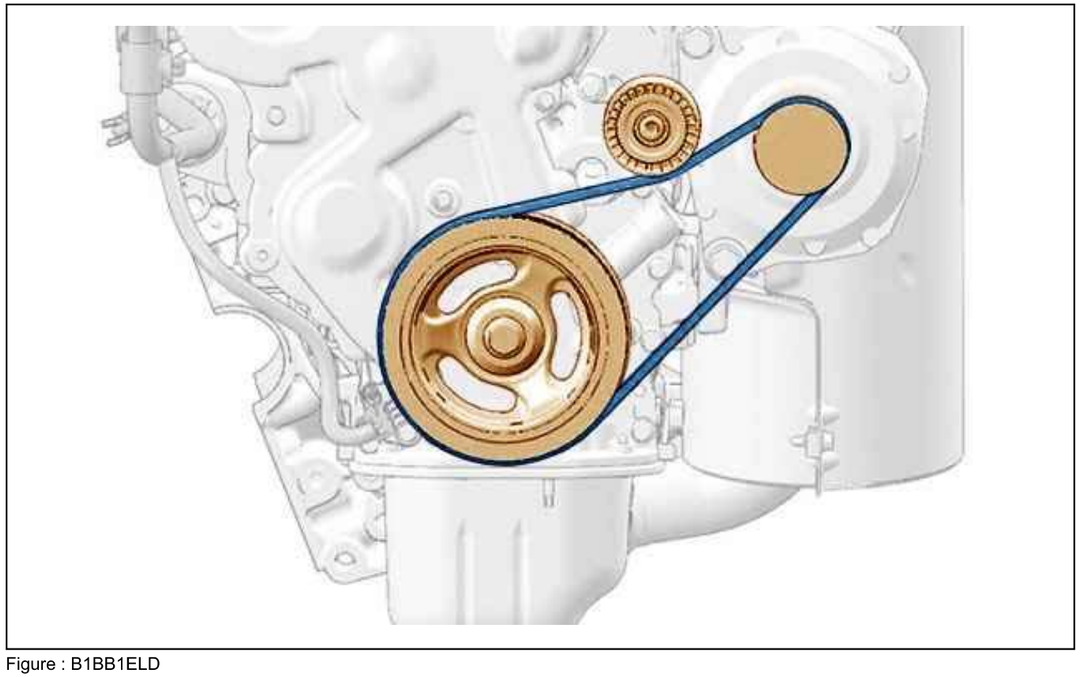

Figure : B1BB1ELD

Without air conditioning.

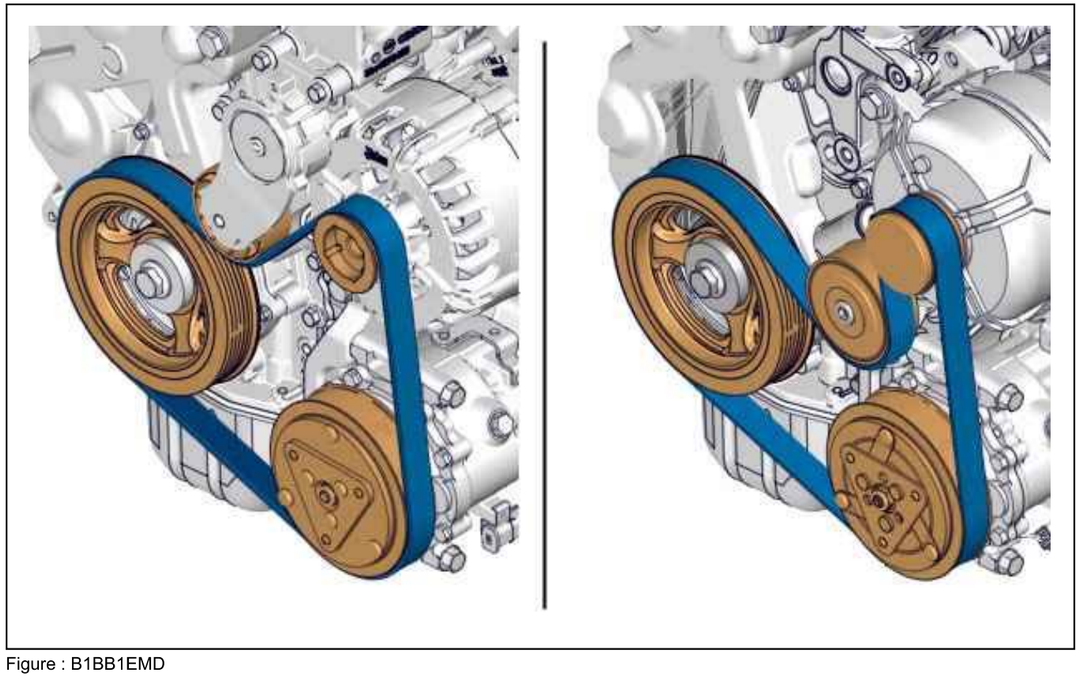

Figure : B1BB1EMD

With air conditioning.

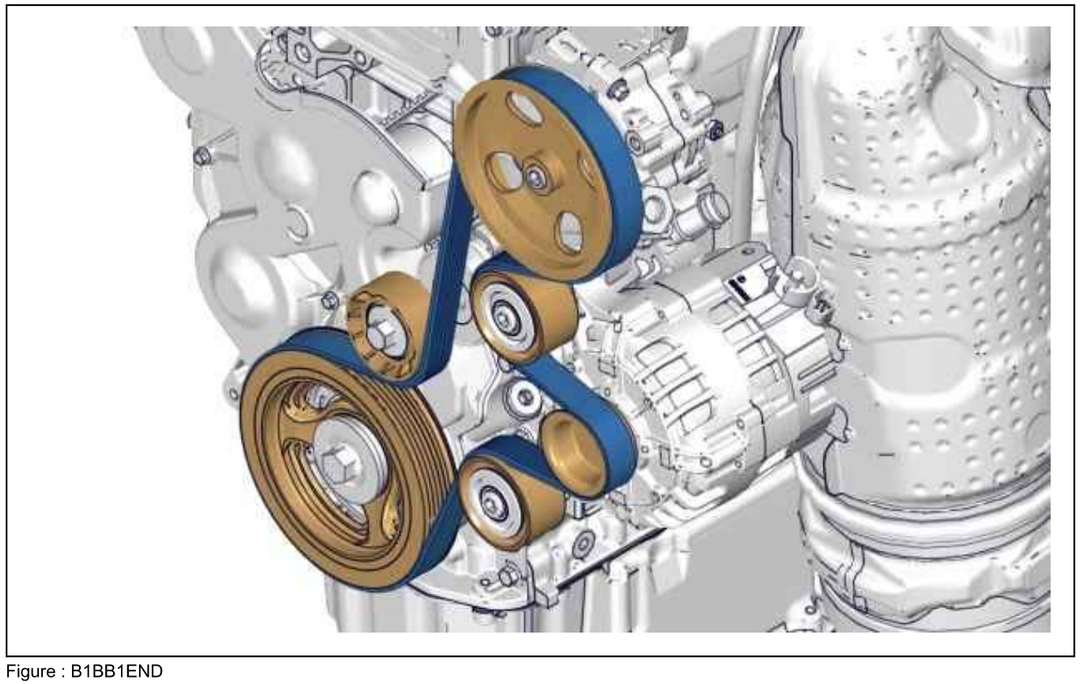

Figure : B1BB1END

Without air conditioning / With driven power steering pump.

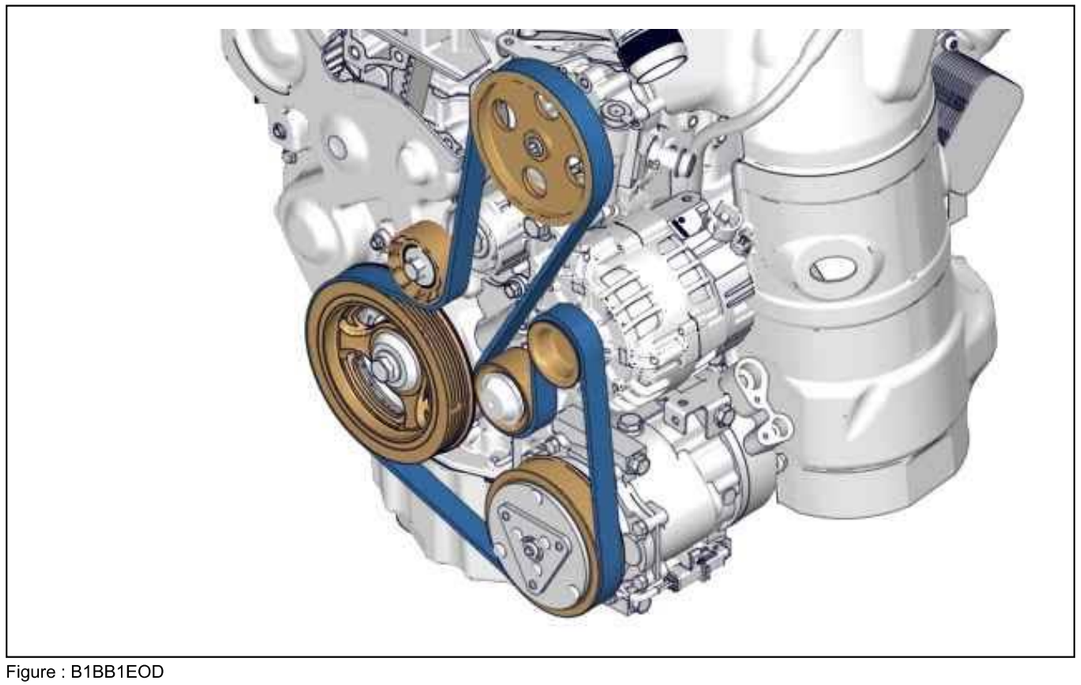

Figure : B1BB1EOD

With air conditioning / With driven power steering pump.

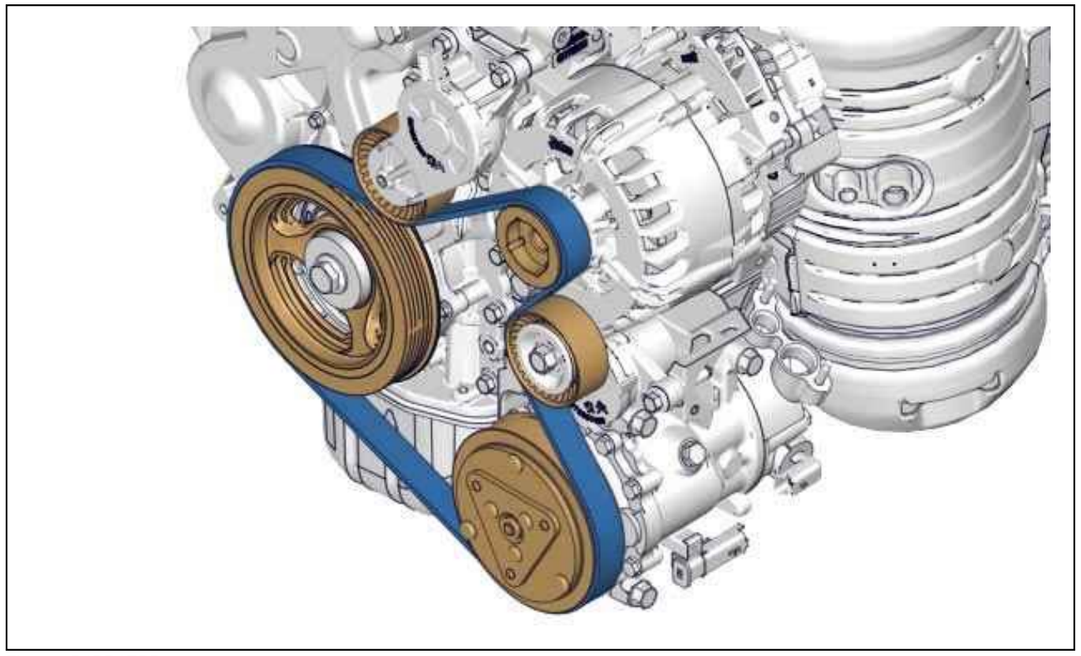

Figure : B1BB1EPD

With air conditioning/Power steering electric pump assembly / Stop and start.

4.2. DW8/DW10/DW12 engines

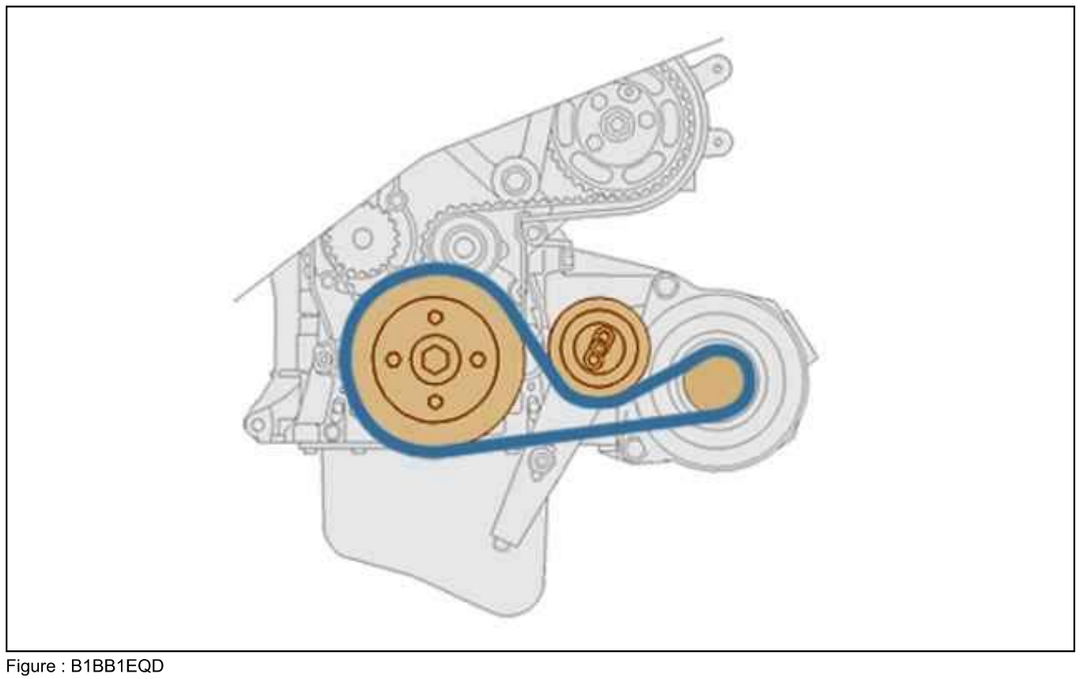

Figure : B1BB1EQD

Without power steering and without air conditioning.

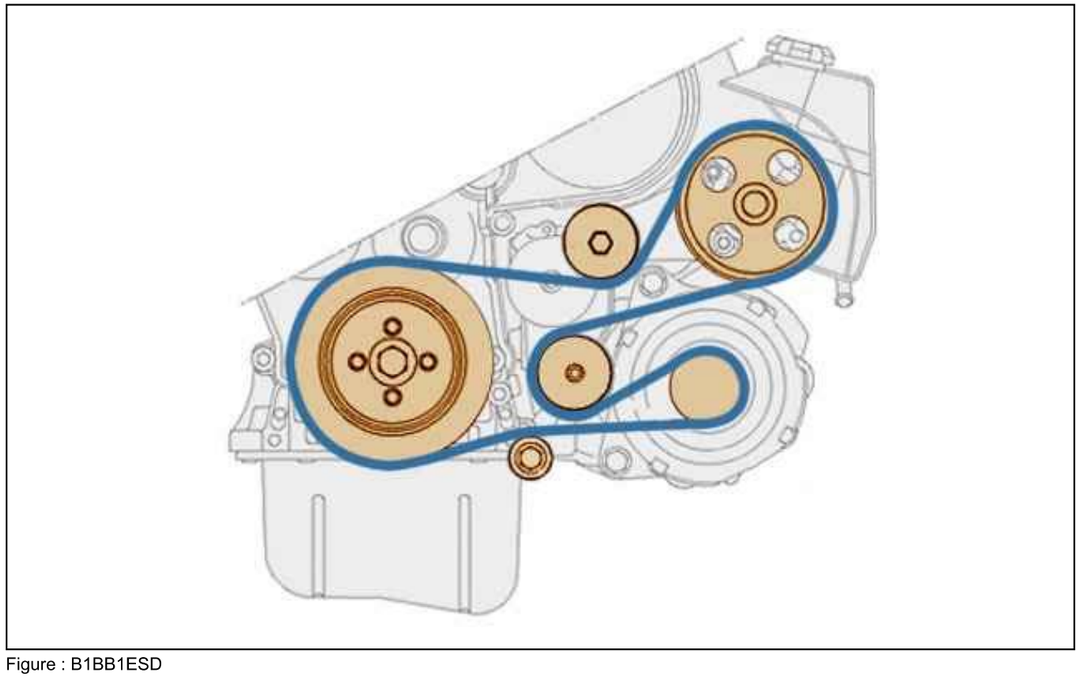

Figure : B1BB1ESD

Without air conditioning / With driven power steering pump.

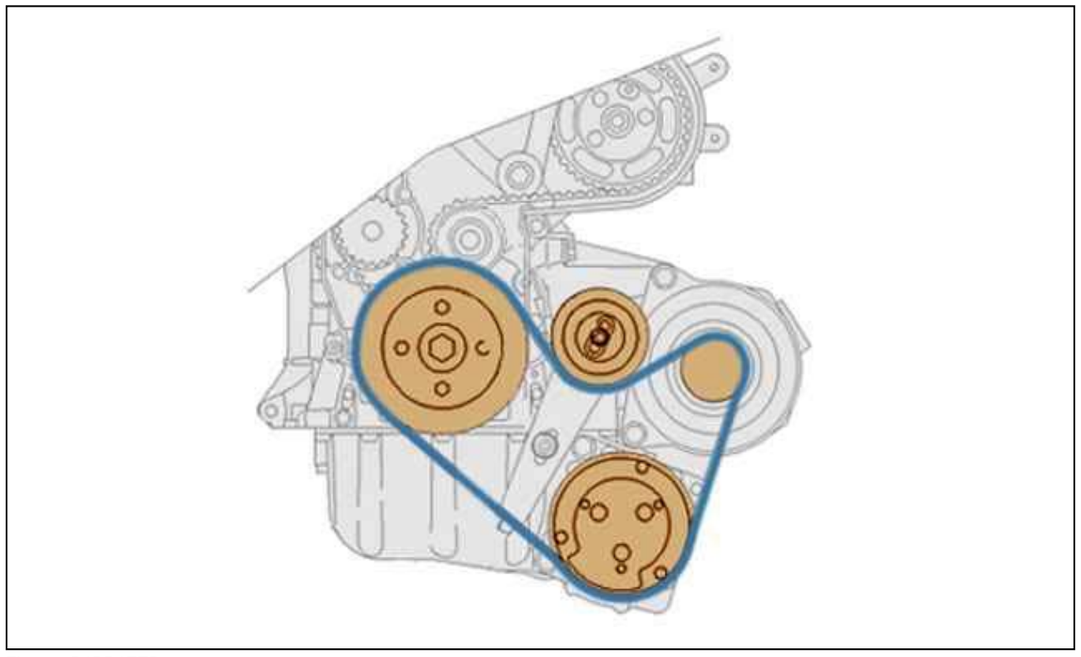

Figure : B1BB1ETD

With air conditioning and without power steering.

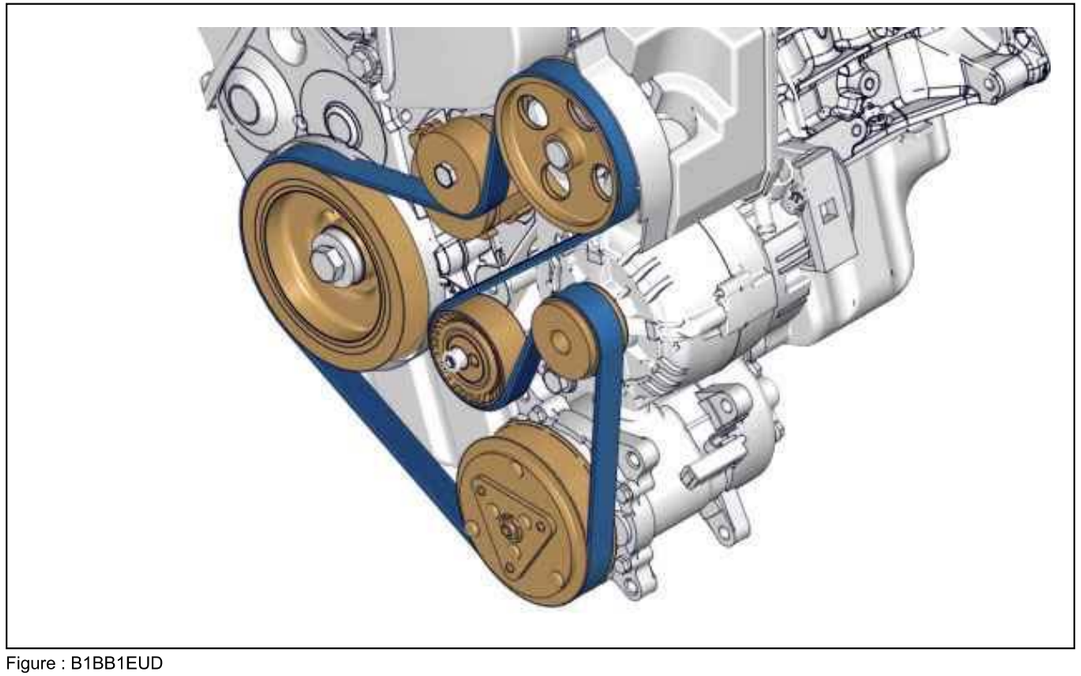

Figure : B1BB1EUD

With air conditioning / With driven power steering pump.

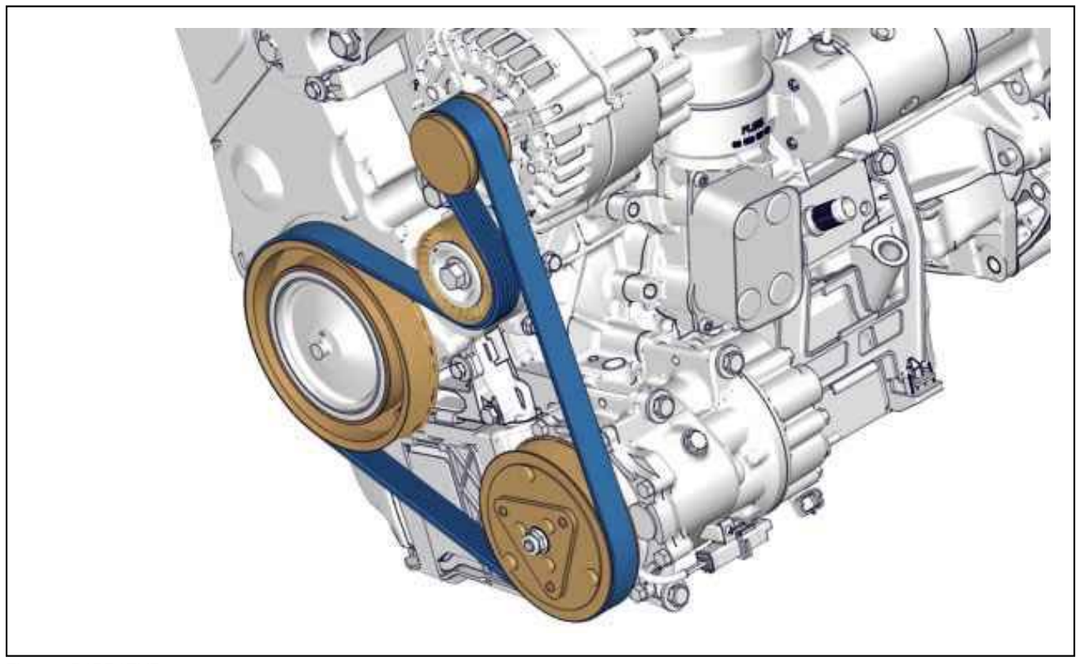

Figure : B1BB1EVD

With air conditioning / Power steering electric pump assembly .

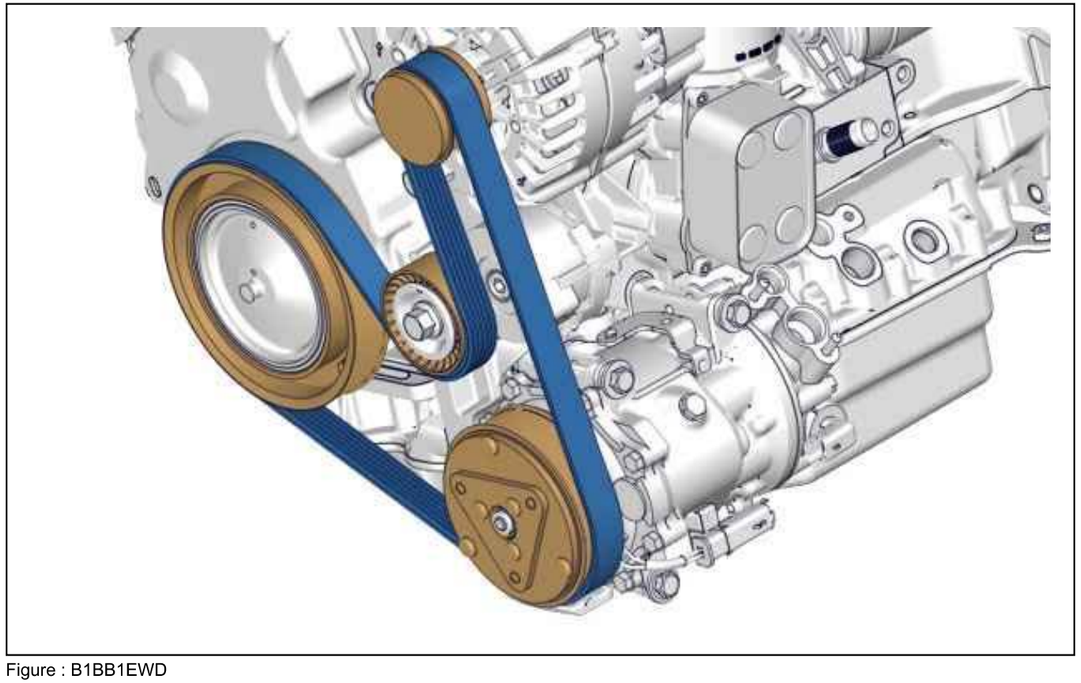

Figure : B1BB1EWD

With air conditioning / Power steering electric pump assembly .

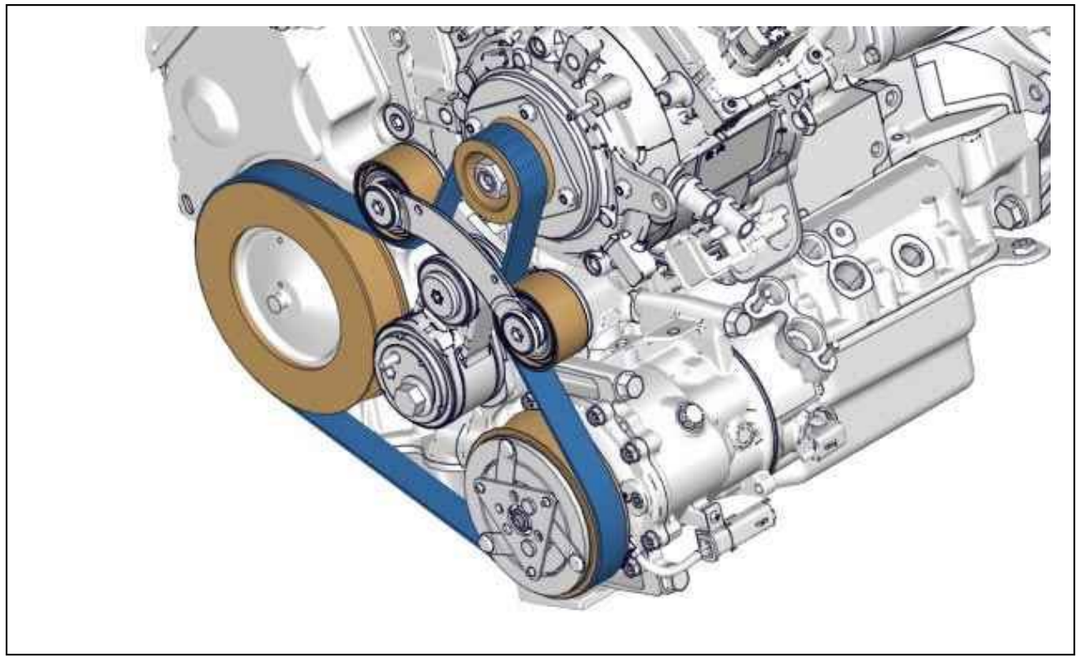

Figure : B1BB1EXD

With air conditioning / Power steering electric pump assembly / Hybrid.

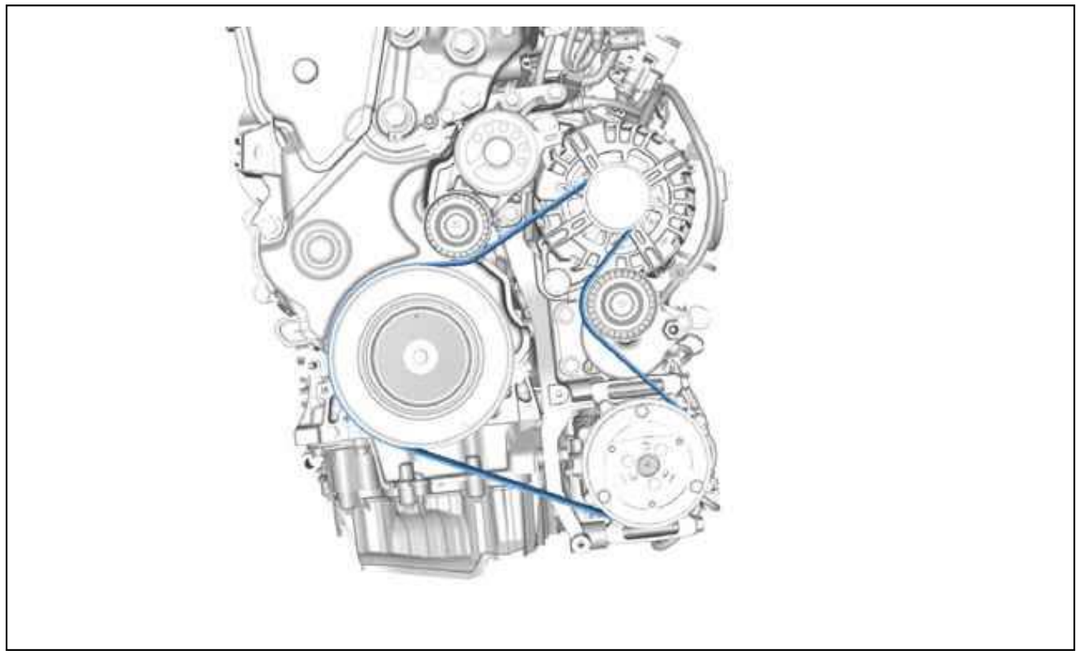

Figure : B1BB1T6D

With air conditioning / Power steering electric pump assembly .

4.3. DT17/DT20 engines

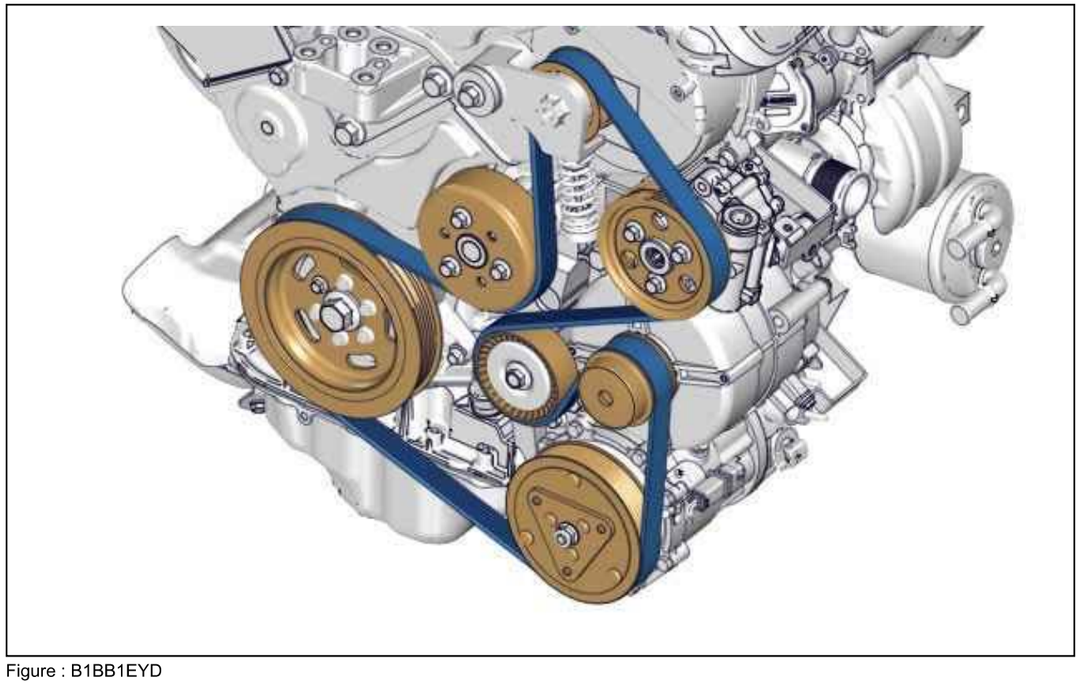

Figure : B1BB1EYD

all models.

4.4. 4N13 engine

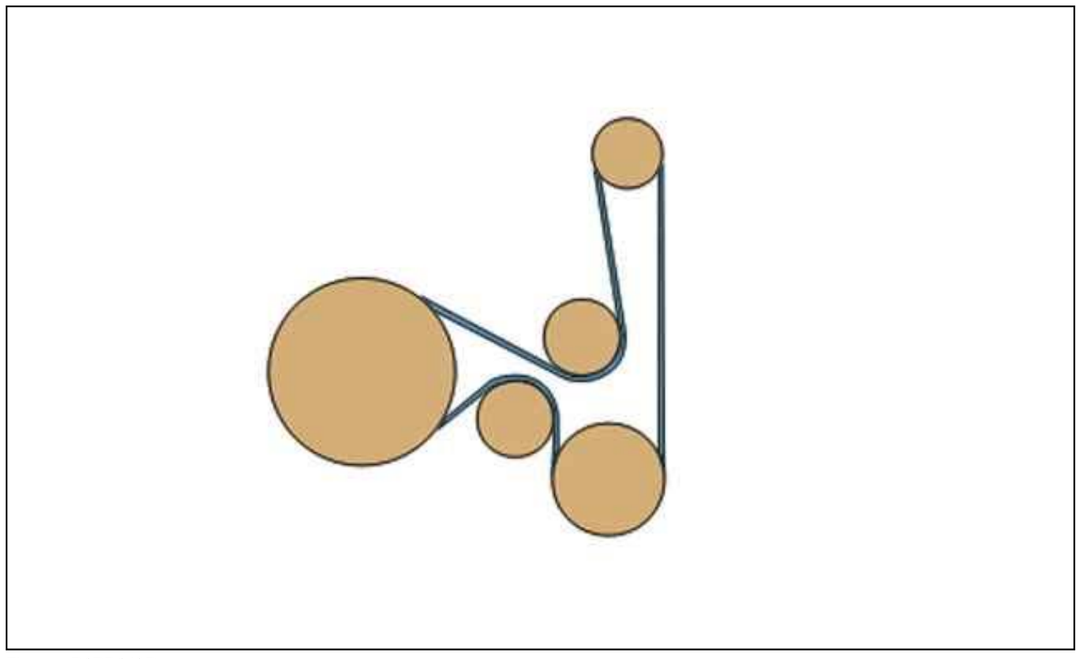

Figure : B1BB1J0D

all models.

4.5. P22DTE engine

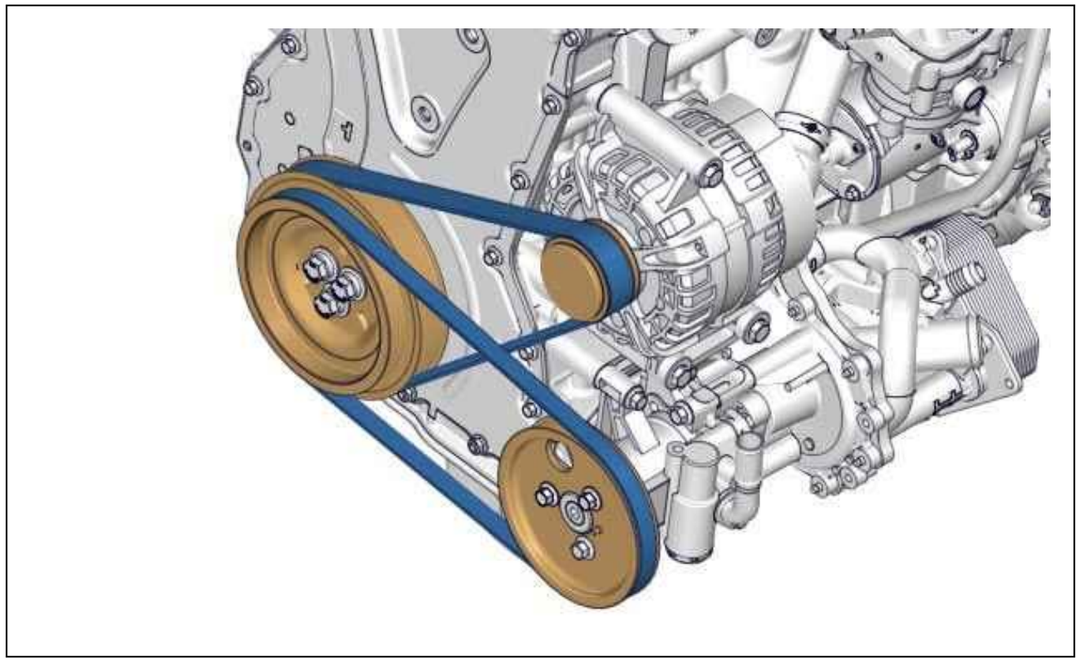

Figure : B1BB1EZD

Without air conditioning.

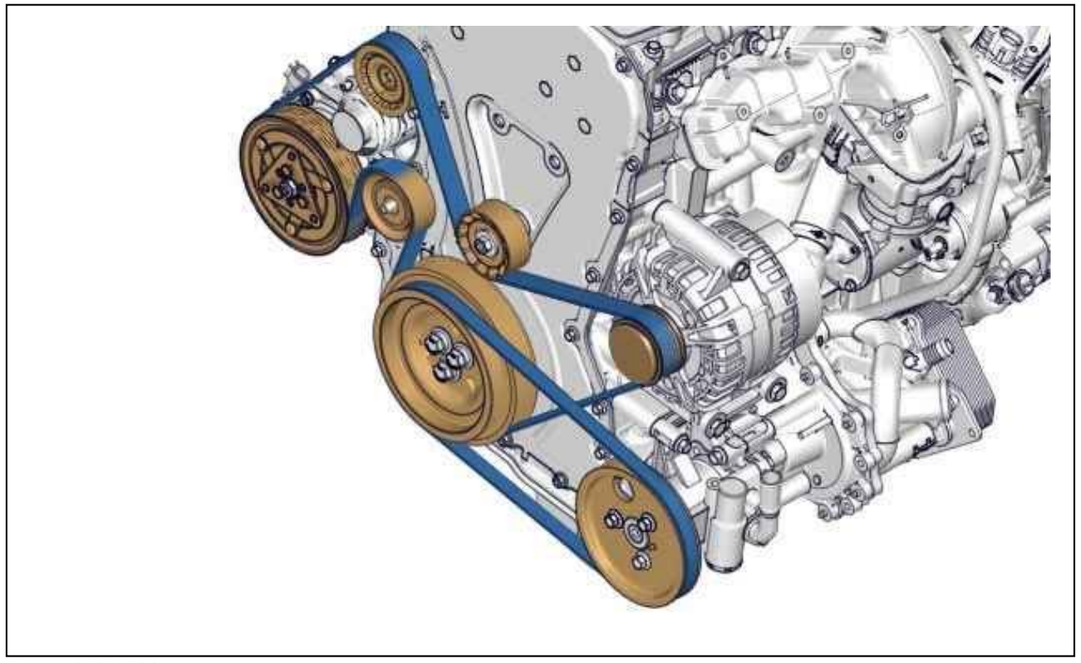

Figure : B1BB1F0D

With air conditioning.

4.6. F30DT engine

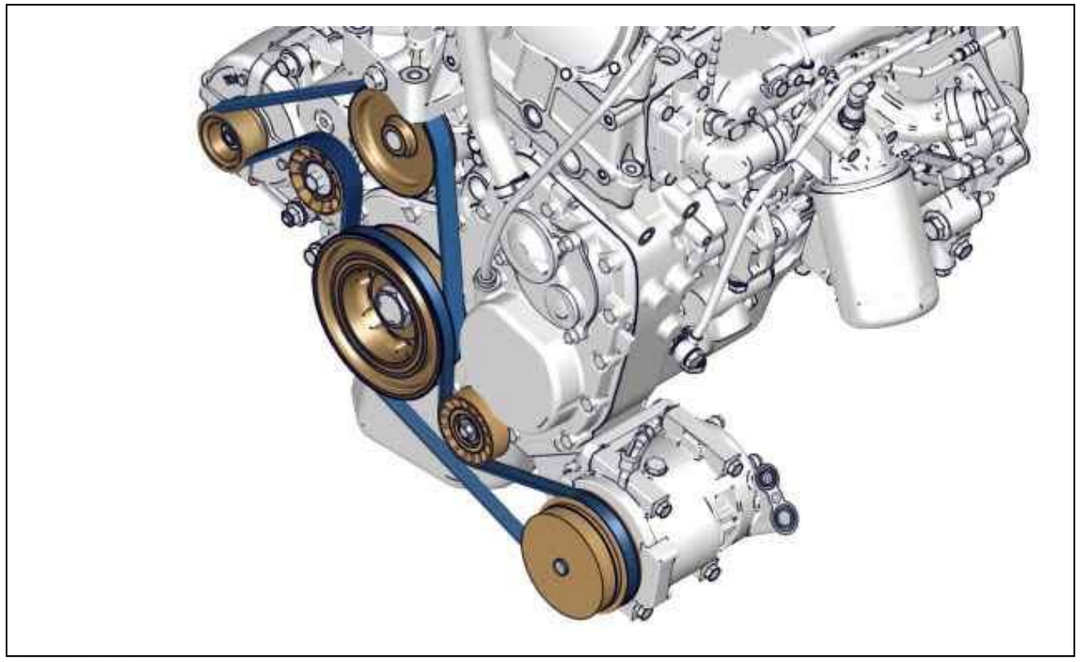

Figure : B1BB1F1D

all models.

DATA : PISTONS - LITTLE ENDS - PISTON RINGS

1. pistons

1.1. Identification

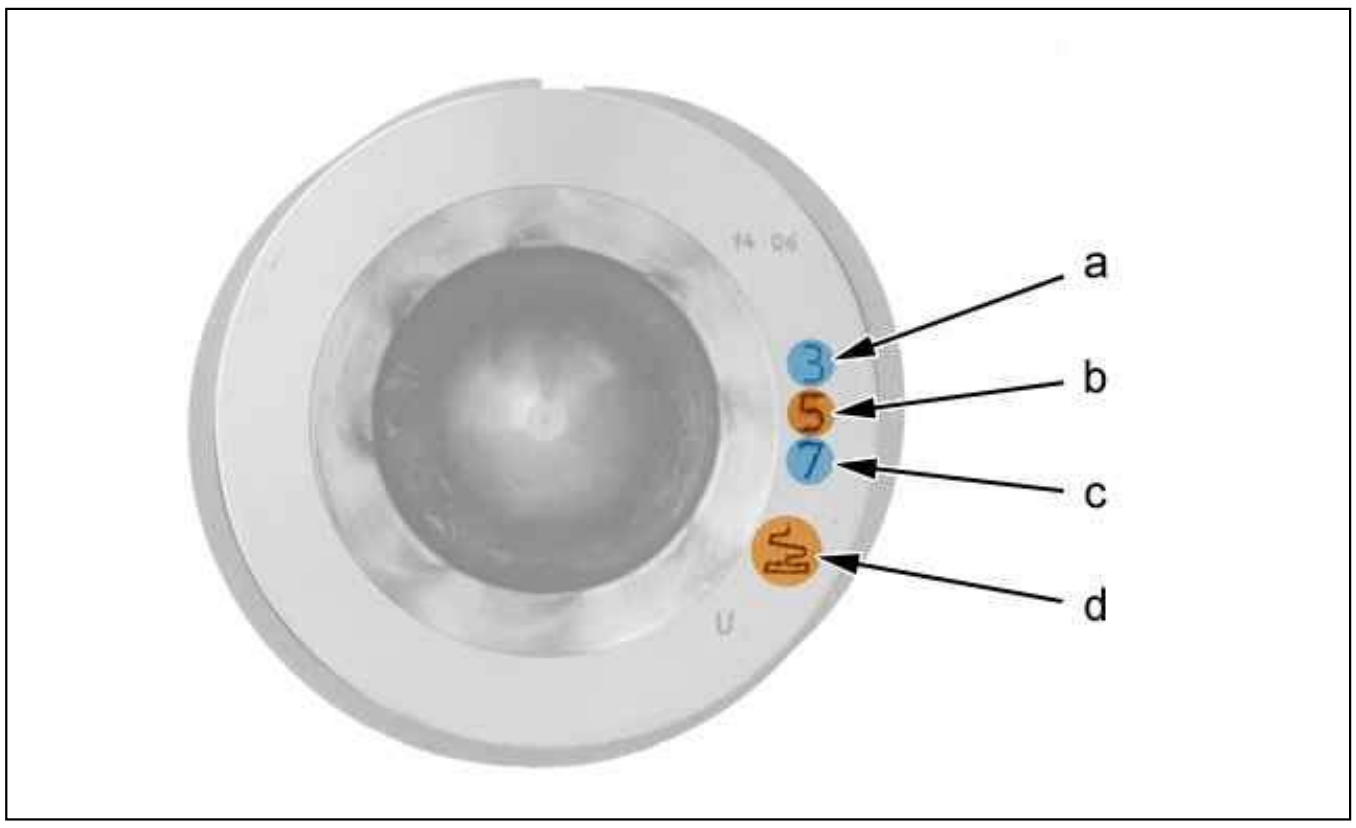

Figure : B1BM00YD

Engine type (as "a").
Piston diameter class (as "b").
make (as "c").
The flywheel symbol must be positioned on the flywheel side (as "d").

1.2. Data

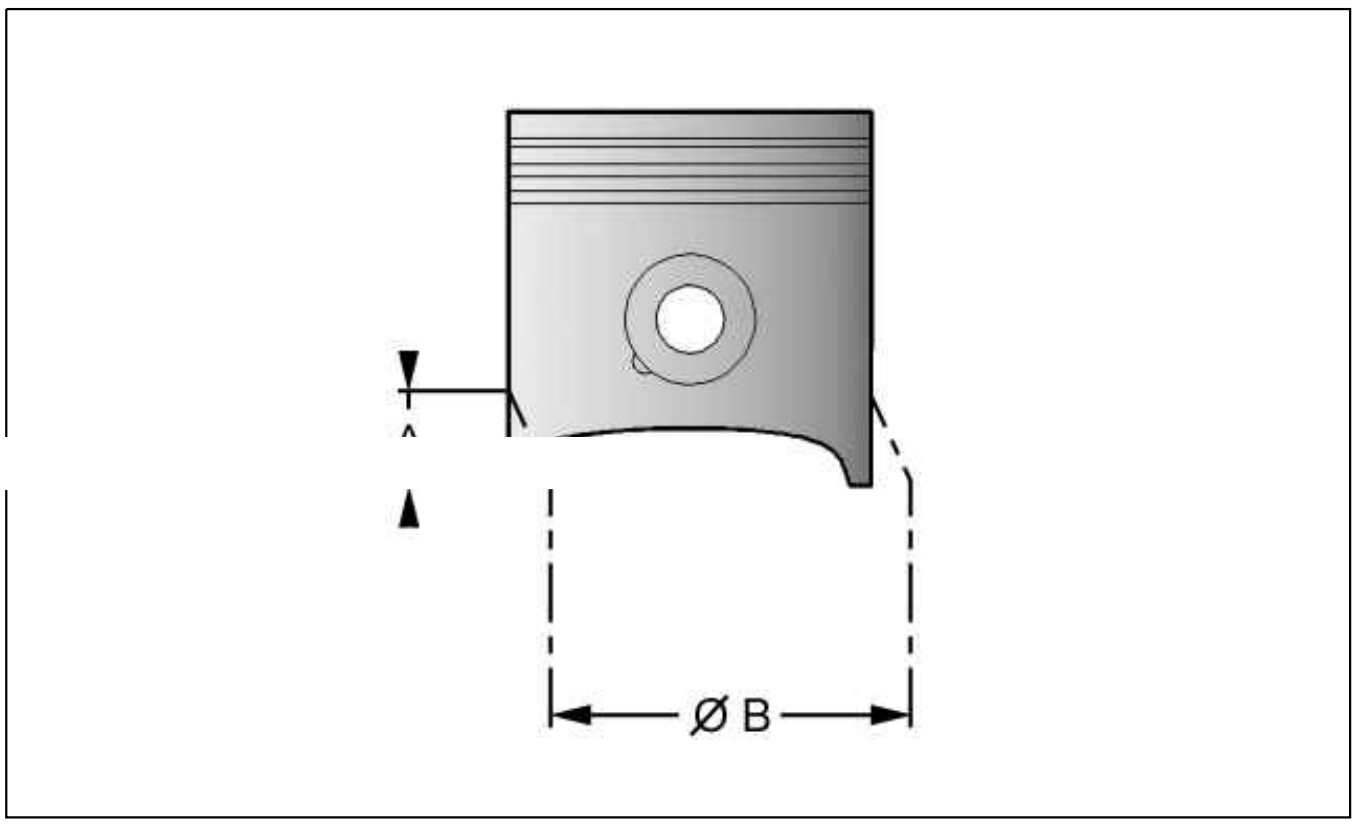

Figure : B1CM00QD

Note : The diameter " B" of the piston should be measured from a dimension "A" = 10 mm.

Diameter "B"	
Nominal dimension	95,705 (+ 0,01; 0) mm
Repair size	96,105 (+ 0,01; 0) mm

2. Little ends

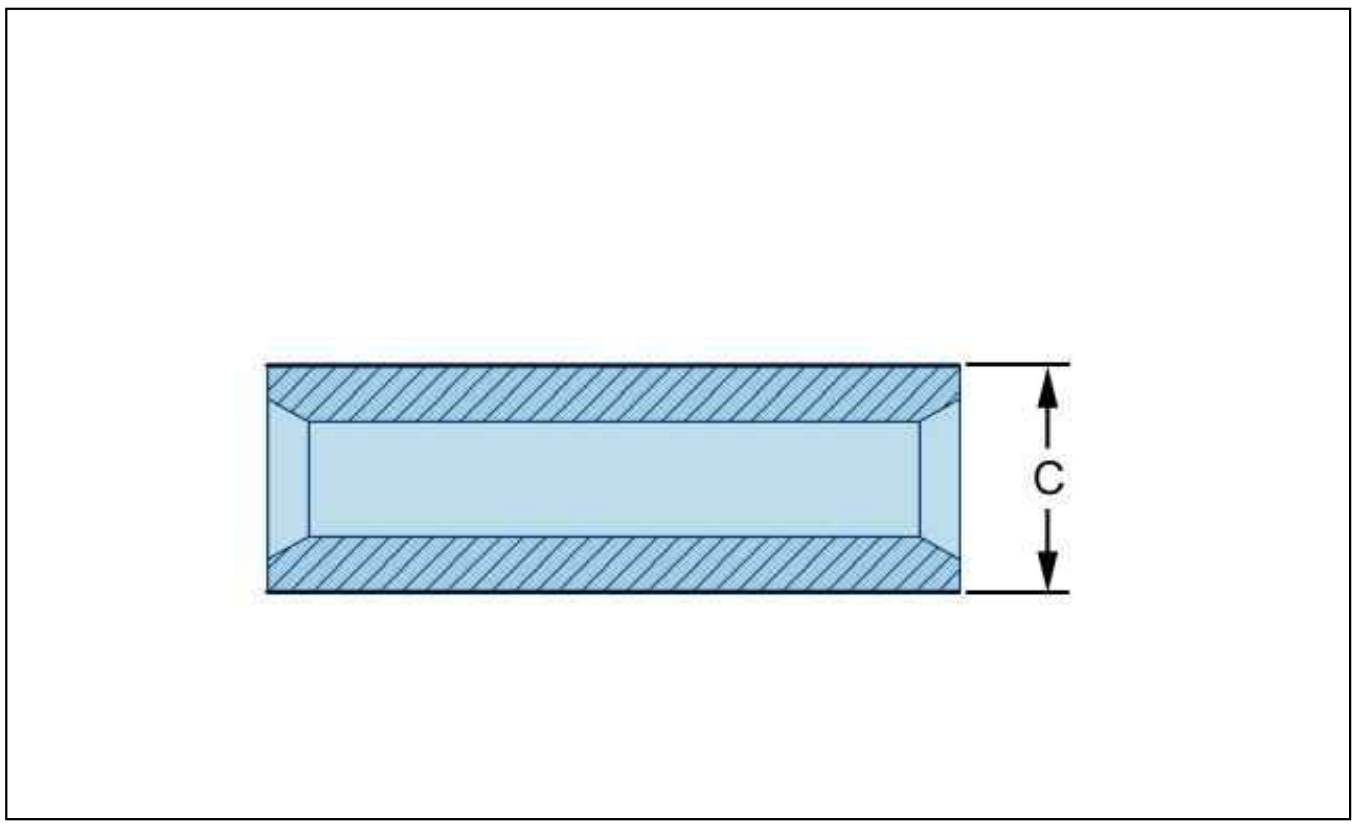

Figure : B1CM00RD

	Nominal dimension
Diameter of the piston gudgeon pin housing	36,003 (+ 0,006 ; 0) mm
Diameter "C"	35,990 (+ 0,006 ; 0) mm

3. Piston rings

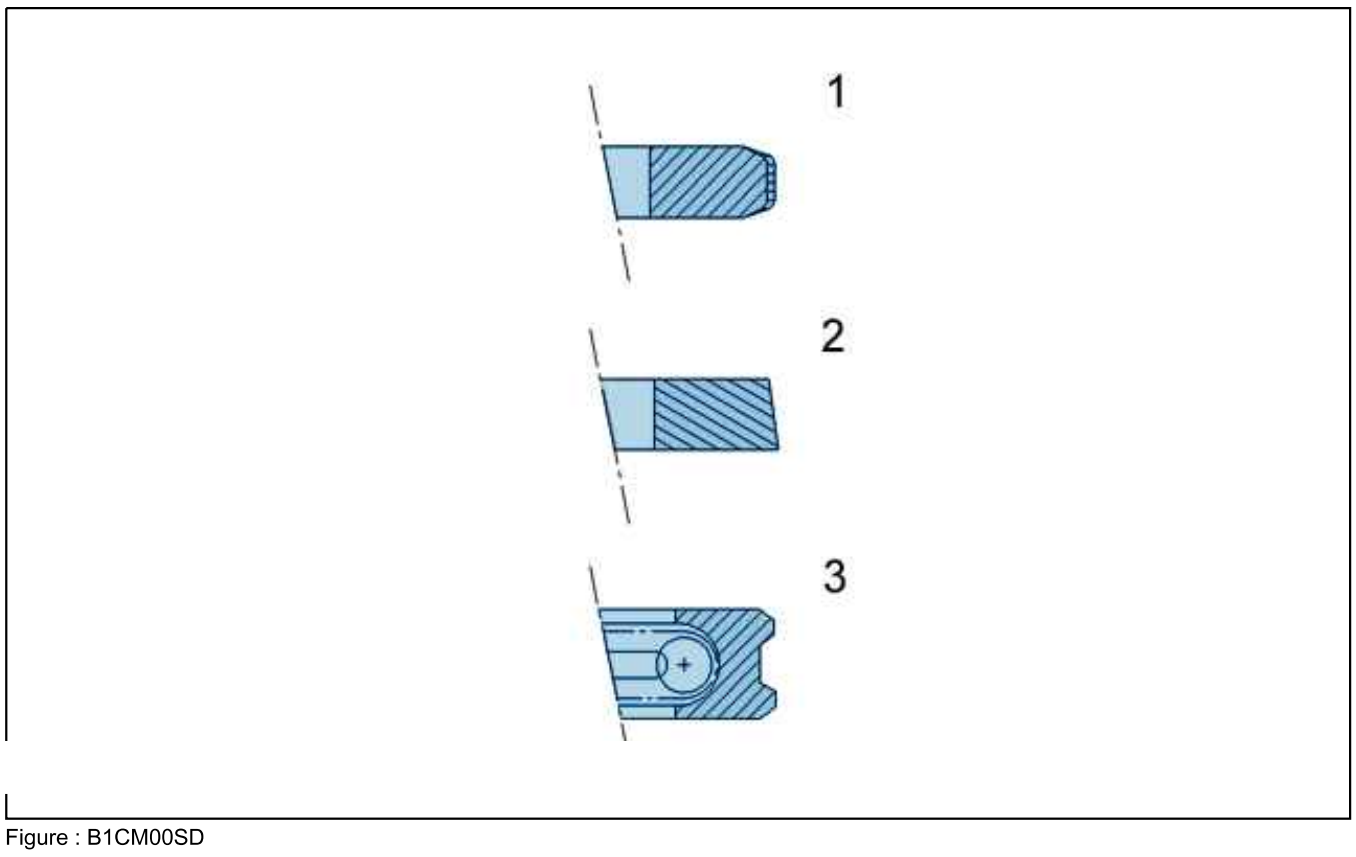

Figure : B1CM00SD

(1)Compression ring.
(2)Sealing ring .
(3)Scraper ring .

3.1. Compression ring

Thickness	2,068 (+ 0,029 ; 0) mm
Ring gap	0,20 to 0,35 mm

3.2. Sealing ring

Thickness	1,970 (+ 0,020 ; 0) mm
Ring gap	0,60 to 0,80 mm

3.3. Scraper ring

Thickness	2,470 (+ 0,020 ; 0) mm
Ring gap	0,25 to 0,50 mm

CHECKING AND ADJUSTING VALUES : F30DTE ENGINE TYPE

1. Foreword

1.1. Units of pressure

1/ Units of pressure in bars.

N.B. : One bar has the advantage of being close to the average atmospheric pressure at sea level.

2/ Unit of pressure in millimetres of mercury (symbol: mmHg) or Torr (symbol: Torr).
This unit of measurement of pressure was origially defined as the pressure exerted at 0°C by a 1 millimetre column of mercury, later indexed to the atmospheric pressure.
The pressure values indicated in the tables below are the values read on the pressure gauge (Relative pressure).

N.B. : Relative pressure is equal to absolute pressure minus atmospheric pressure.

1.2. Units of tension

The SEEM unit measures by deflection of the static tension of the belt, by deforming a portion of its length.

2. General engine information

Type of engine	F30DTE	F30DTE
	EURO 4	EURO 4
Engine legislative type	F1CE0481D	F1CE3481DM
Cubic capacity	2999 cc	
Fuel	Diesel	
Maximum power	115 kW	
Engine speed at maximum power	3500 rpm	
Maximum torque	40 daNm	
Engine speed at maximum torque	1700 rpm	

Type of engine	F30DTE	F30DTE	F30DTE
	EURO 5	EURO 5	EURO 5
Engine legislative type	F1CE348IN	F1CE348ID	F1CE348IE
Cubic capacity	2999 cc	2999 cc	2999 cc
Fuel	Diesel	Diesel	Diesel
Maximum power	107 kW	117 kW	130 kW
Engine speed at maximum power	3500 rpm	3500 rpm	3500 rpm
Maximum torque	40 daNm	40 daNm	40 daNm
Engine speed at maximum torque	1700 rpm	1700 rpm	1400 rpm

3. Valve clearances

Inlet valves	0,50 ± 0,05 mm
Exhaust valves	0,50 ± 0,05 mm

4. Oil capacity

	EURO 4	EURO 5
After oil change, without replacement of filter	7,6 litres	8 litres
After oil change, with replacement of filter	8,6 litres	9 litres
Difference between minimum and maximum on the gauge	1 litre	1 litre

Oil change interval : Refer to the maintenance schedule.

CAUTION : Always check the oil level using the dipstick.

5. Oil pressure

N.B. : Check the oil level with the engine cold.

CAUTION : Oil pressure is checked with the engine hot after checking the oil level (80°).

Engine speed	Minimum oil pressure
Engine idling	1 ± 0,2 bar
3500 rpm	4 to 0,2 bars

6. Ancillary drive belt

Belt tension	By dynamic roller tensioner

7. timing belt

Chain tension	By chain tensioner

8. Cylinder head bolts

CAUTION : Always replace cylinder head bolts and washers.

9. Pressure, engine end of compression

Measure the pressure at the end of compression, in order, on cylinders 1, 2, 3 and 4.

N.B. : The difference in pressure between 2 cylinders must not exceed 5 bars.

CAUTION : Always search for the origins of fault(s), where the values measured are found to be significantly out.

10. Turbocharge pressure

	Pressure	Pressure
Designation	EURO 4	EURO 5
Turbocharger pressure	1,1 ± 0,1 bar	1,8 ± 0,1 bar

11. Low pressure fuel supply circuit

Designation	Pressure check
Idling	4,25 ± 1,5 bars

DATA : CYLINDER BLOCK

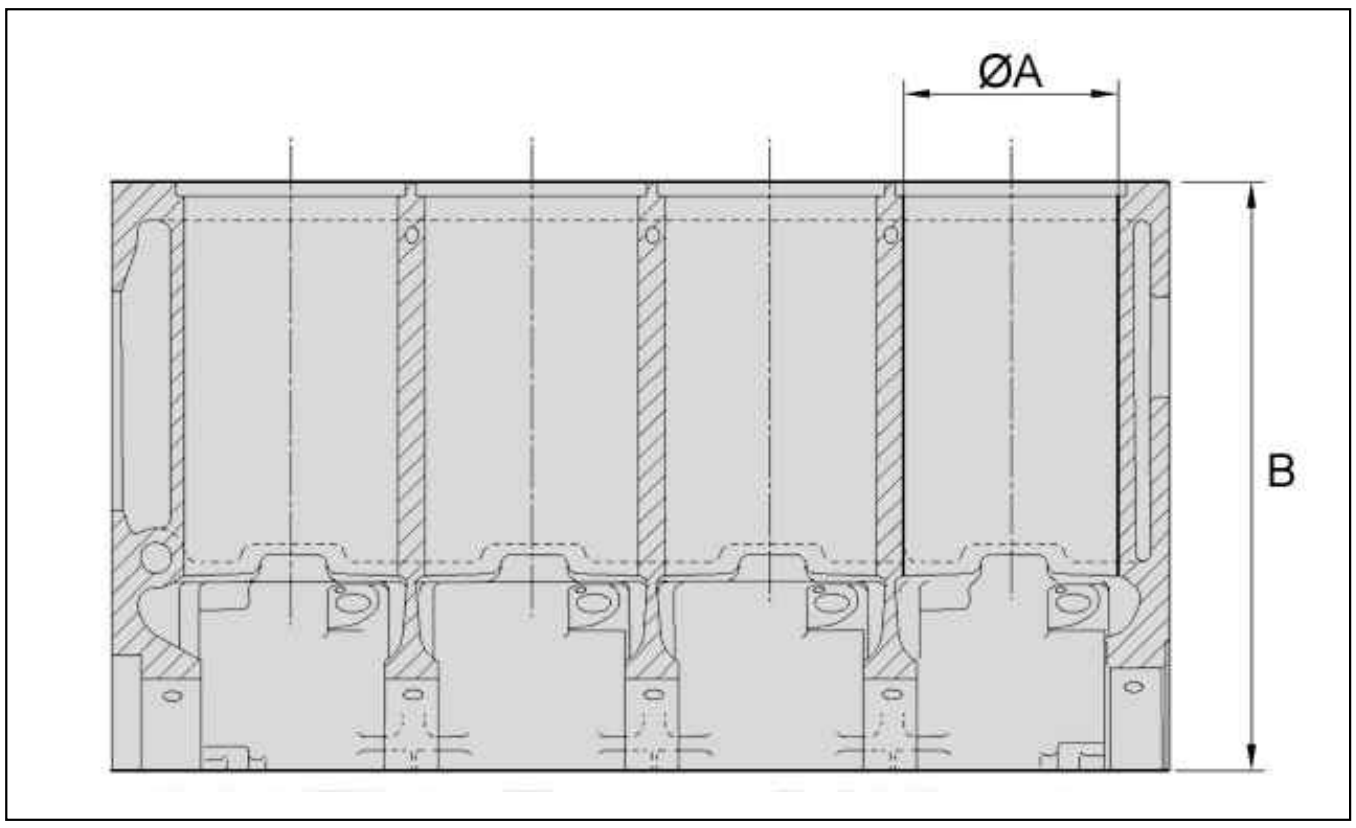

Figure : B1DP2APD

N.B. : Cylinder No. 1 is at the timing end.

1. Cylinder block height

Height "B"	
Nominal dimension	274,5 ± 0,05 mm
Max. permissible bow	0,2 mm

2. Cylinder bore

Diameter "A"	
Nominal dimension	95,802 (+ 0,020 , 0) mm
Repair size	96,202 (+ 0,020 , 0) mm

TIGHTENING TORQUES : F30 DT ENGINE

1. Reciprocating gear

Designation	Stage	Tightening torque	Angular tightening
Crankshaft bearing cap housing fixing screws screws 12 mm in Ø	Pre-tighten	5 daNm	-
	1st angular tightening	-	60° +/- 5°
	2nd angular tightening	-	60° +/- 5°
Crankshaft bearing cap housing fixing screws , 8 mm Ø	Tightening	2,6 daNm	-
Conrod screws	Pre-tighten	5 daNm	-
	Angular tightening	-	70° +/- 5°
Accessories drive pulley	Tightening	35 daNm	-

2. Cylinder block

Designation	Tightening torque
underside of piston jet	2,5 daNm
sump	2,5 daNm
Timing chain guides	4 daNm
Timing chain tensioner	5 daNm
Timing double gear bolt	11 daNm
Power steering pump drive gear bolt	13 daNm

3. Cylinder head

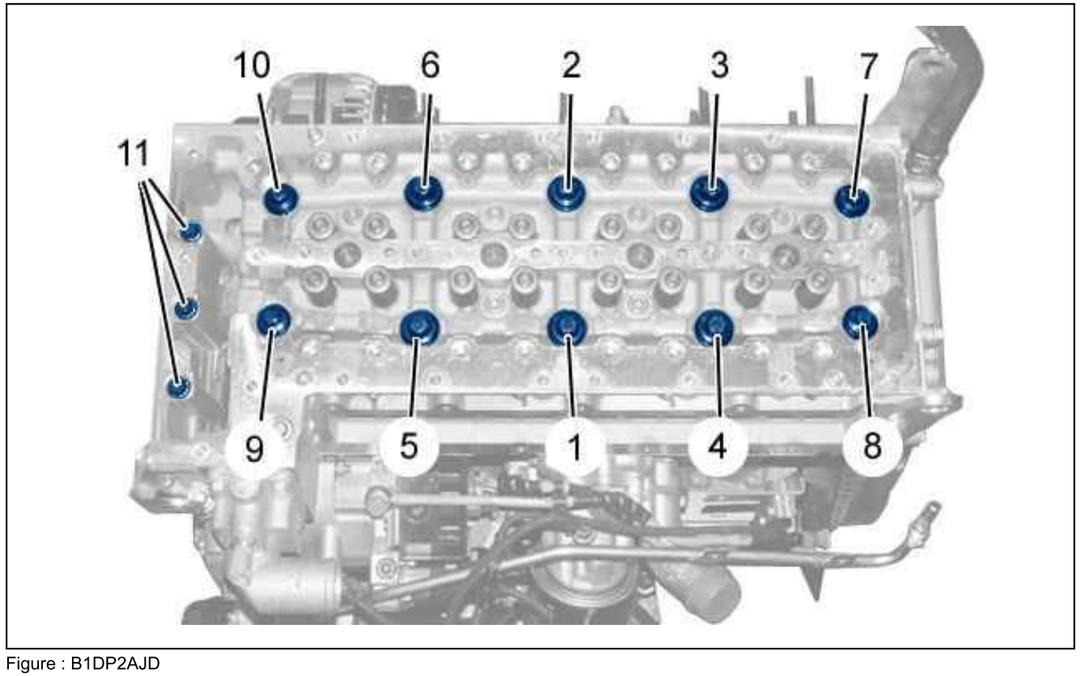

Figure : B1DP2AJD

Reference	Designation	Stage	Tightening torque	Angular tightening
(1) to (10)	Cylinder head : screws 15 mm in Ø ; , 12 mm Ø	Hand-tighten	-	-
(11)	Cylinder head : screws 8 mm in Ø			
(1) to (6)	Cylinder head : screws 15 mm in Ø	Tightening	13 daNm	-
(7) to (10)	Cylinder head : screws 12 mm in Ø	Tightening	6,5 daNm	-
(1) to (10)	Cylinder head : screws 15 mm in Ø ; , 12 mm Ø	1st angular tightening	-	90° +/- 5°
(1) to (6)	Cylinder head : screws 15 mm in Ø	2nd angular tightening	-	90° +/- 5°
(7) to (10)	Cylinder head : screws 12 mm in Ø	2nd angular tightening	-	60° +/- 5°
(11)	Cylinder head : screws 8 mm in Ø	Tightening	2,5 daNm	-
-	Camshaft carrier bearings bolt	Tightening	2,5 daNm	-
-	Exhaust manifold	Tightening	2,5 daNm	-
-	Air inlet manifold	Tightening	3 daNm	-
-	Camshaft sprockets	Tightening	11 daNm	-

4. Engine flywheel - Clutch

Designation	Stage	Tightening torque	Angular tightening
Double flywheel	Tightening	3 daNm	-
	Angular tightening	-	60 ± 2,5°

5. Lubrication system

Designation	Tightening torque

oil pump	2,5 daNm
coolant/oil heat exchanger	2,5 daNm
Turbocharger lubricating pipe	3,5 daNm
Turbocharger oil return pipe	4,5 daNm
Turbocharger oil return pipe bolt	1 daNm
Oil pressure sensor	4 daNm
Oil level sensor /The oil temperature	2,5 daNm
Drain cap	5 daNm

6. Diesel injection circuit

Designation	Tightening torque
Injector flange bolts	2,8 daNm
Fuel high pressure common injection rail unions	2 daNm
High pressure pump bracket nut	2,5 daNm
high pressure fuel pump	2,5 daNm
Union on diesel injector	2,5 daNm
Fuel high pressure common injection rail	2,8 daNm
Connector on high pressure pump	2,1 daNm
Fuel high pressure sensor on fuel high pressure common injection rail	7 daNm
Pressure regulator on the high pressure fuel pump	2,5 daNm

7. Cooling system

Designation	Tightening torque
Coolant pump : screws 10 mm in Ø	5 daNm
Coolant pump : screws 8 mm in Ø	2,5 daNm
Coolant outlet housing	2,5 daNm
Water temperature sensor	2,5 daNm

8. Turbocharging system

Designation	Tightening torque
Turbocharger fixing nut	2,5 daNm
Exhaust manifold fixing nuts	2,5 daNm

DATA : CAMSHAFTS

1. Camshaft journal

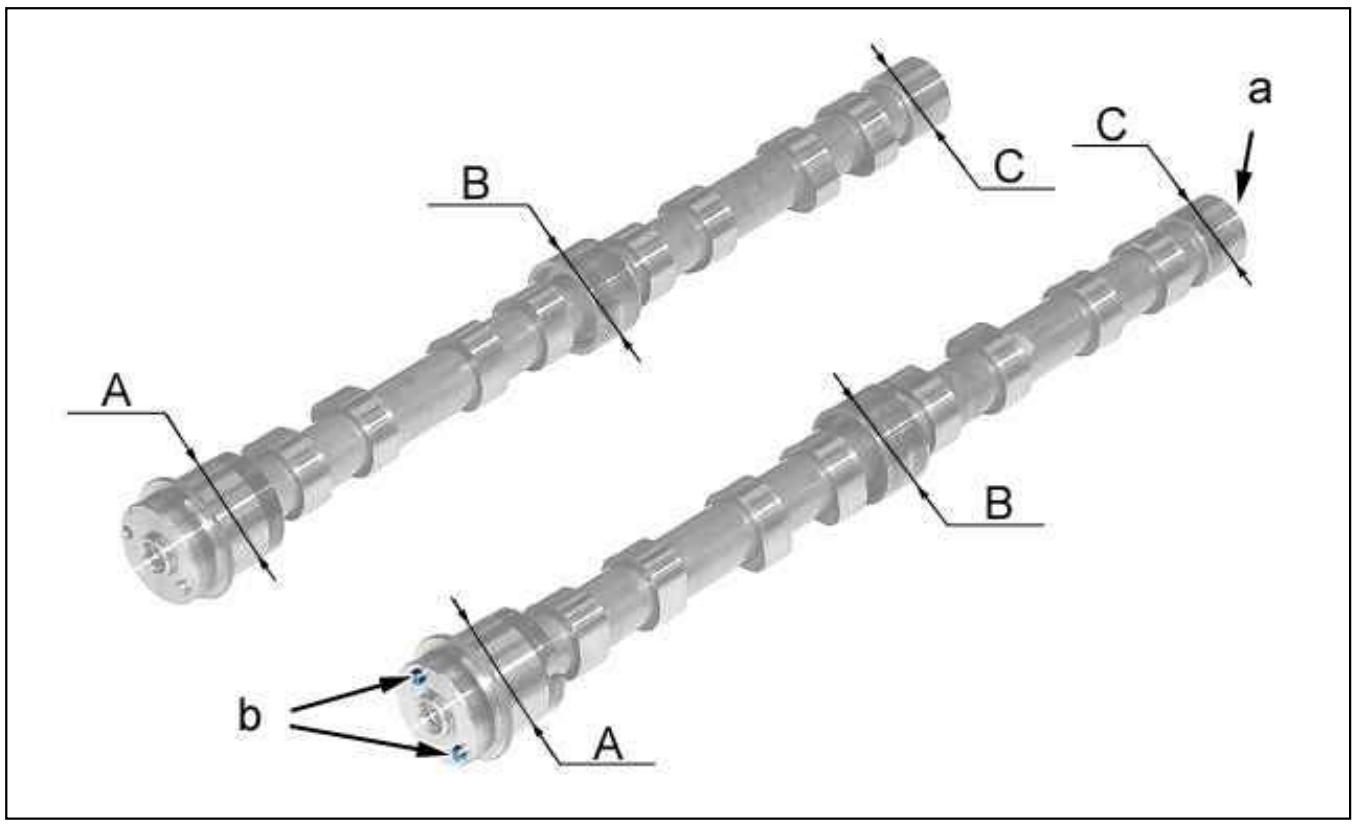

Figure : B1DP2ATD

Camshaft journal	Nominal dimension
Diameter "A"	48,925 (+ 0,025 , 0) mm
Diameter "B"	46,925 (+ 0,025 , 0) mm
Diameter "C"	35,925 (+ 0,025 , 0) mm

The camshaft journals cannot be ground.
Replace the camshaft in the case of wear.
Identification of the inlet camshaft :

- housing (at "a")
- 2 Centring pins (at "b")

2. Cam lift

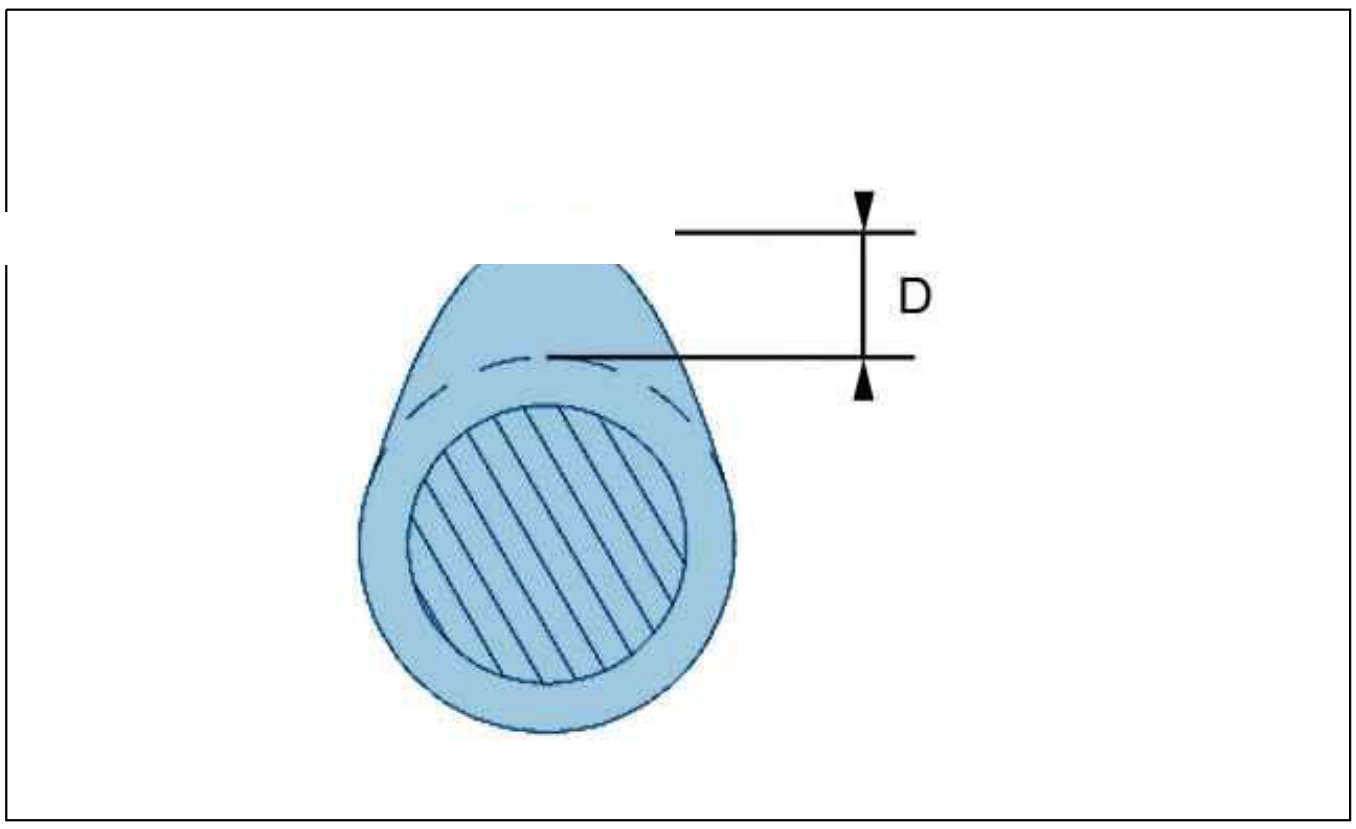

Figure : B1DP2AUD

" D" : Cam lift	
Inlet cams	4,328 mm
Exhaust cams	3,622 mm

DATA : CONRODS ANDHALF SHELLS

1. Conrods

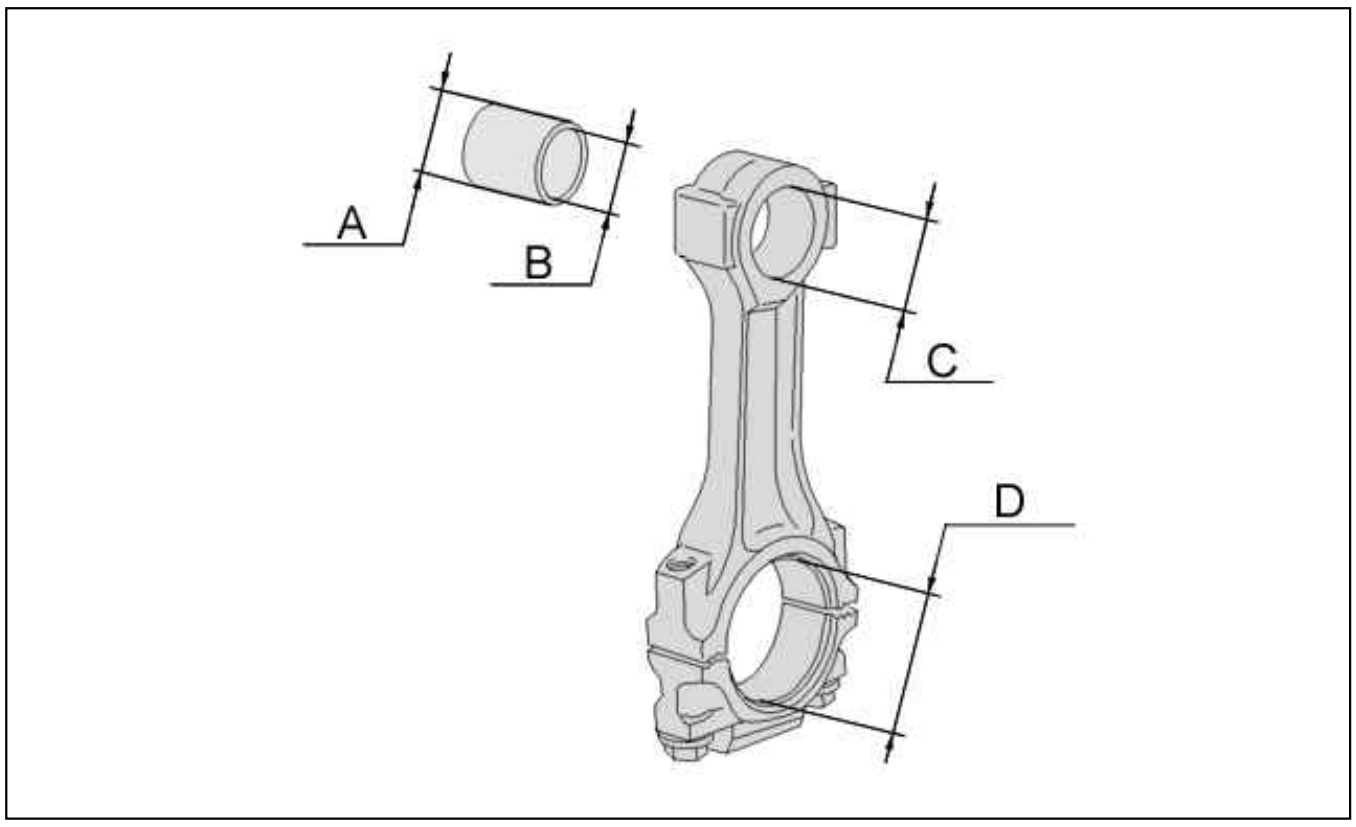

Figure : B1DP2AVD

Diameter "D"	67,833 (+ 0,015 , 0) mm
Diameter "C"	39,460 (+ 0,030 , 0) mm

CAUTION : Repair of the conrods is strictly prohibited.

2. Little ends bush

Diameter "A"	39,570 (+0,025 , 0) mm
Diameter "B"	36,010 (+0,010 , 0) mm

The little ends bush is not sold separately by the replacement parts department.
If the little ends bush is worn, replace the conrod .

3. Connecting rod half shells

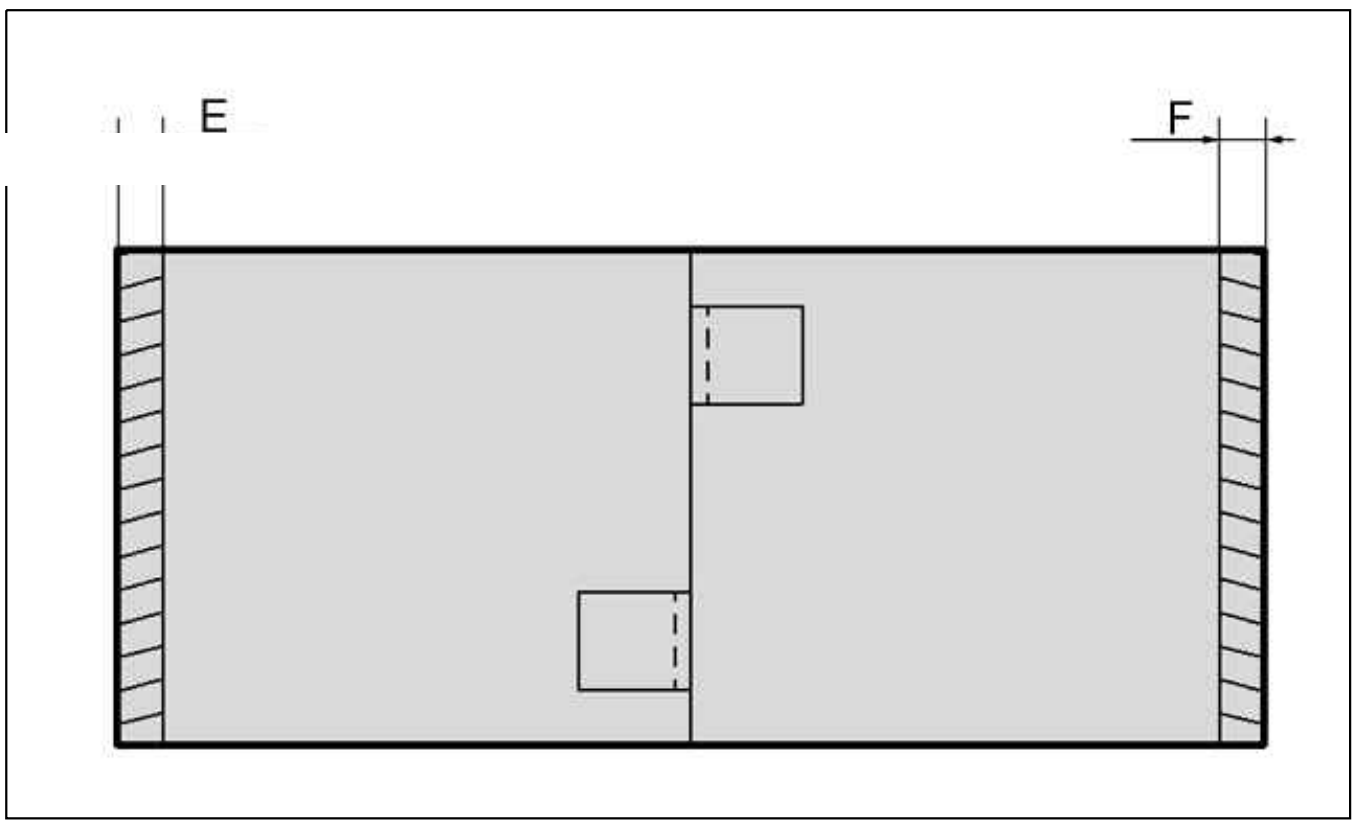

Figure : B1DP2AWD

Connecting rod half shells	Upper shells "E"	Lower shells "F"
Nominal dimension	1,883 (+ 0,009 , 0) mm	1,885 (+ 0,006 , 0) mm
Repair size 1	2,01 (+ 0,009 , 0) mm	2,012 (+ 0,006 , 0) mm
Repair size 2	2,137 (+ 0,009 , 0) mm	2,139 (+ 0,006 , 0) mm
Clearance between conrod half shells - Crankpins	0,035 (+ 0,048 , 0) mm	

DATA : CRANKSHAFT AND BEARING HALF-SHELLS

1. Identification

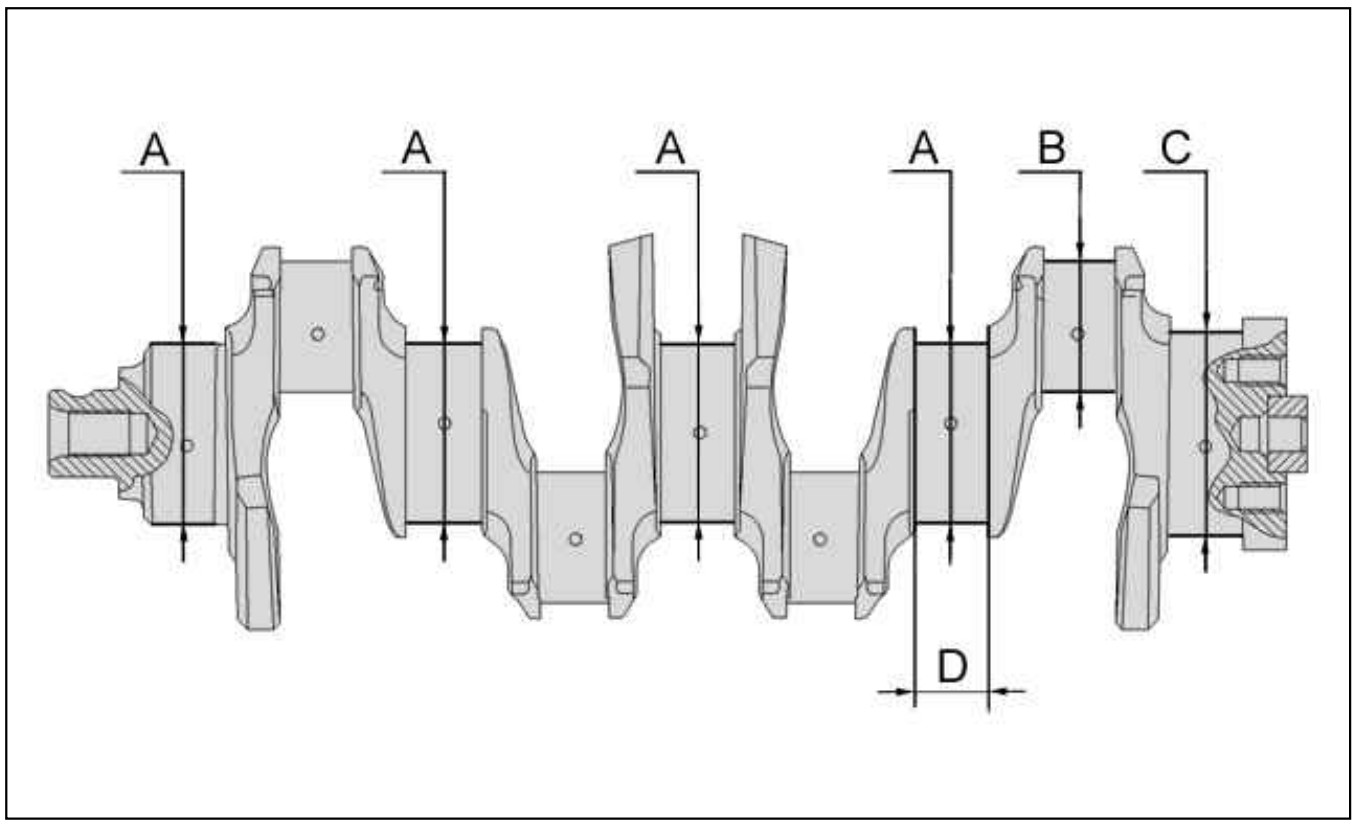

Figure : B1DP2B1D

2. Data

2.1. Crankpins

Description	Distance	Values
Diameter "B"	Nominal dimension	64,015 (+ 0,023 ; 0) mm
	Repair size 1	63,761 (+ 0,023 ; 0) mm
	Repair size 2	63,507 (+ 0,023 ; 0) mm

2.2. Journals

Description	Distance	Values
Diameter "A"	Nominal dimension	76,182 (+ 0,026 ; 0) mm
	Repair size 1	75,928 (+ 0,026 ; 0) mm
	Repair size 2	75,674 (+ 0,026 ; 0) mm
Diameter "C"	Nominal dimension	83,182 (+ 0,026 ; 0) mm
	Repair size 1	82,928 (+ 0,026 ; 0) mm
	Repair size 2	82,674 (+ 0,026 ; 0) mm

N.B. : Grind all the main bearing and big end bearing journals to the same existing repair dimension. Mark the weights of the crankshaft with the stamping corresponding to the grinding.

Ground main bearings (letter M).
Ground big end bearings (letter B).
Ground main and big end bearings (letter MB).

2.3. Crankshaft end float

The crankshaft side play is adjusted by 1 half-shells with flange (On bearing No. 3). There should be a 0,040 to 0,240 mm endfloat.

2.4. Crankshaft bearing shells

N.B. : Bearing No. 1 is at the timing end.

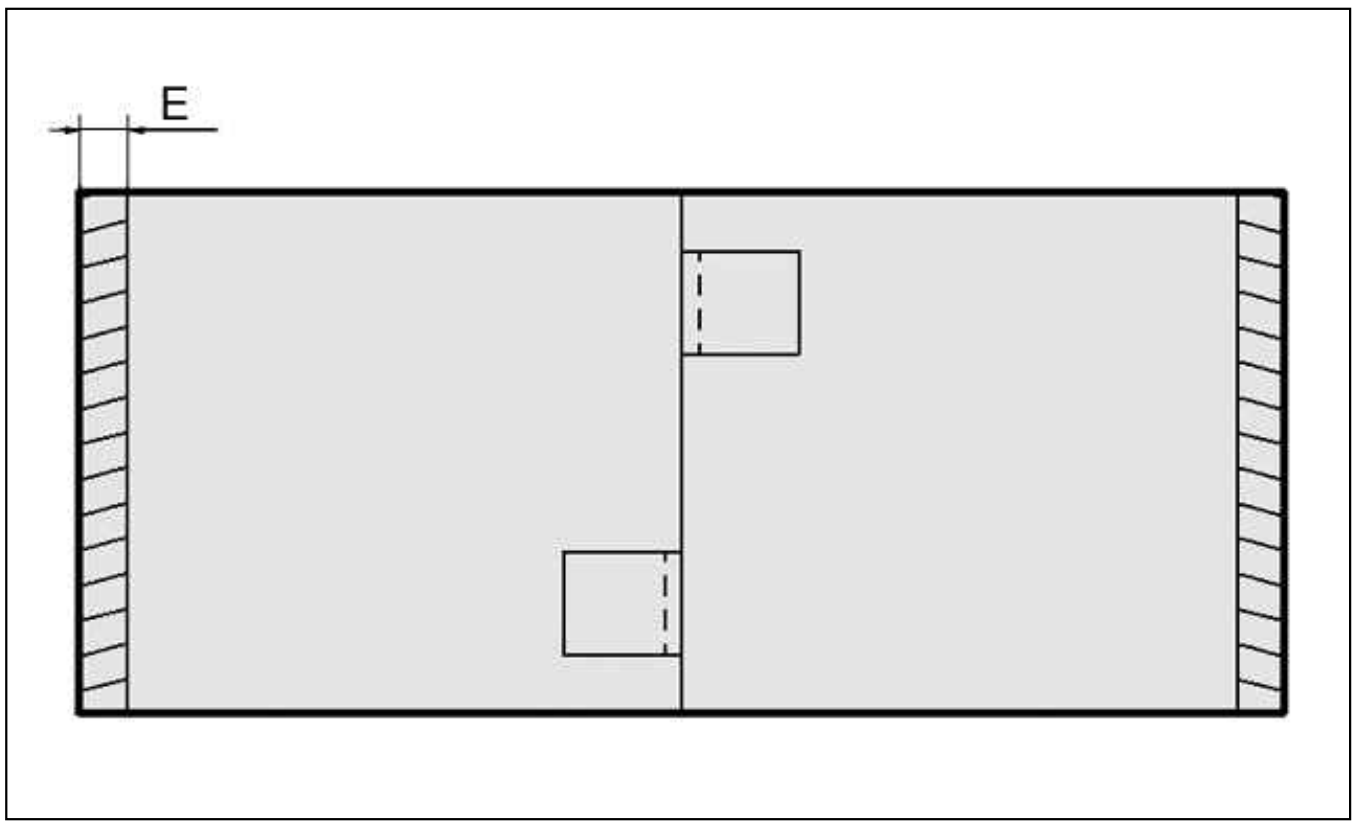

Figure : B1DP2B2D

Description	Distance	Values
Distance E	Nominal dimension	2,165 (+ 0,009 ; 0) mm
	Repair size 1	2,292 (+ 0,009 ; 0) mm
	Repair size 2	2,419 (+ 0,009 ; 0) mm

Set of bearing shells - Journals : 0,032 (+ 0,07 ; 0) mm .

2.5. Crankshaft bearing shells with side shims (On bearing No. 3)

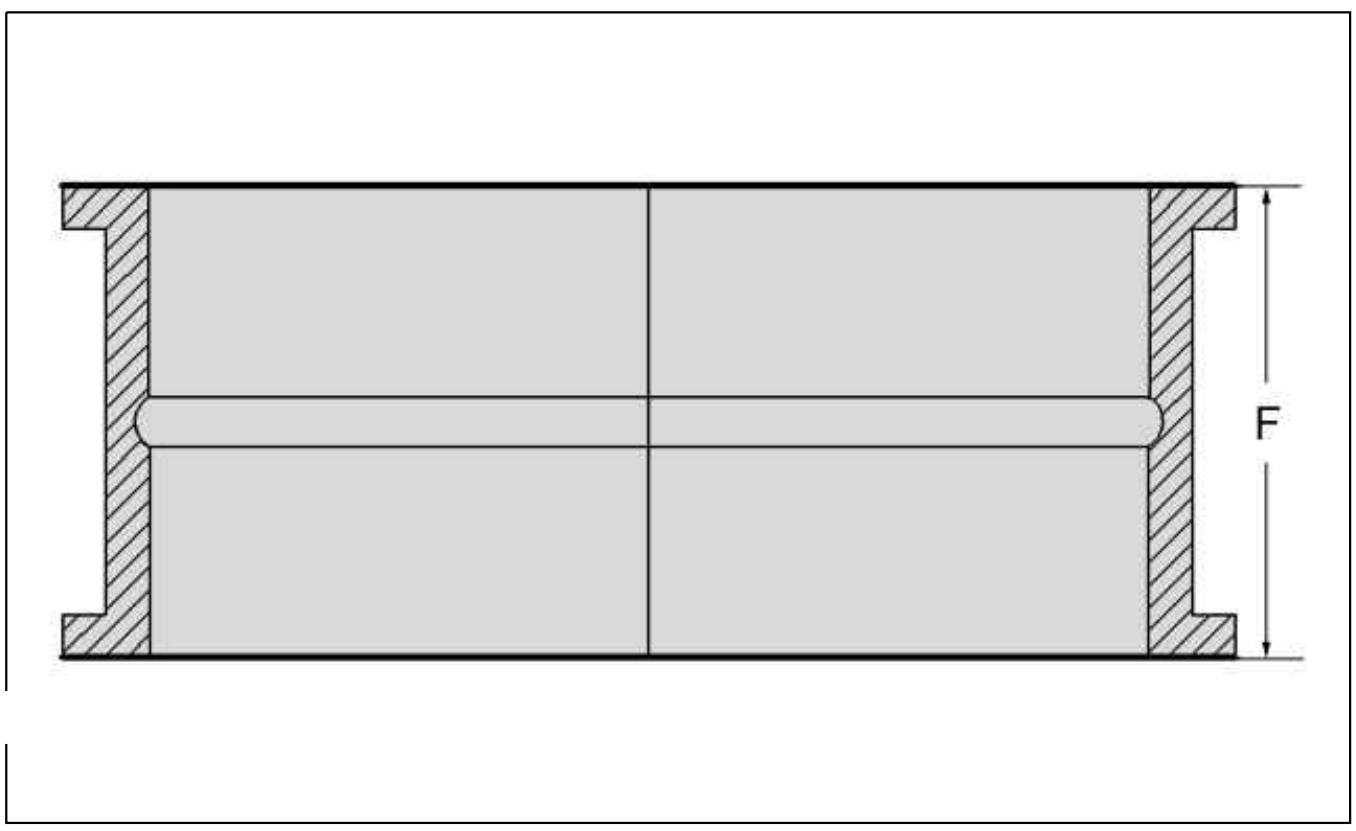

Figure : B1DP2B3D

Distance F : 32,310 (+ 0,15 ; 0) mm .

DATA : CYLINDER HEAD, CYLINDER HEAD GASKET AND CYLINDER HEAD BOLTS

1. Cylinder head

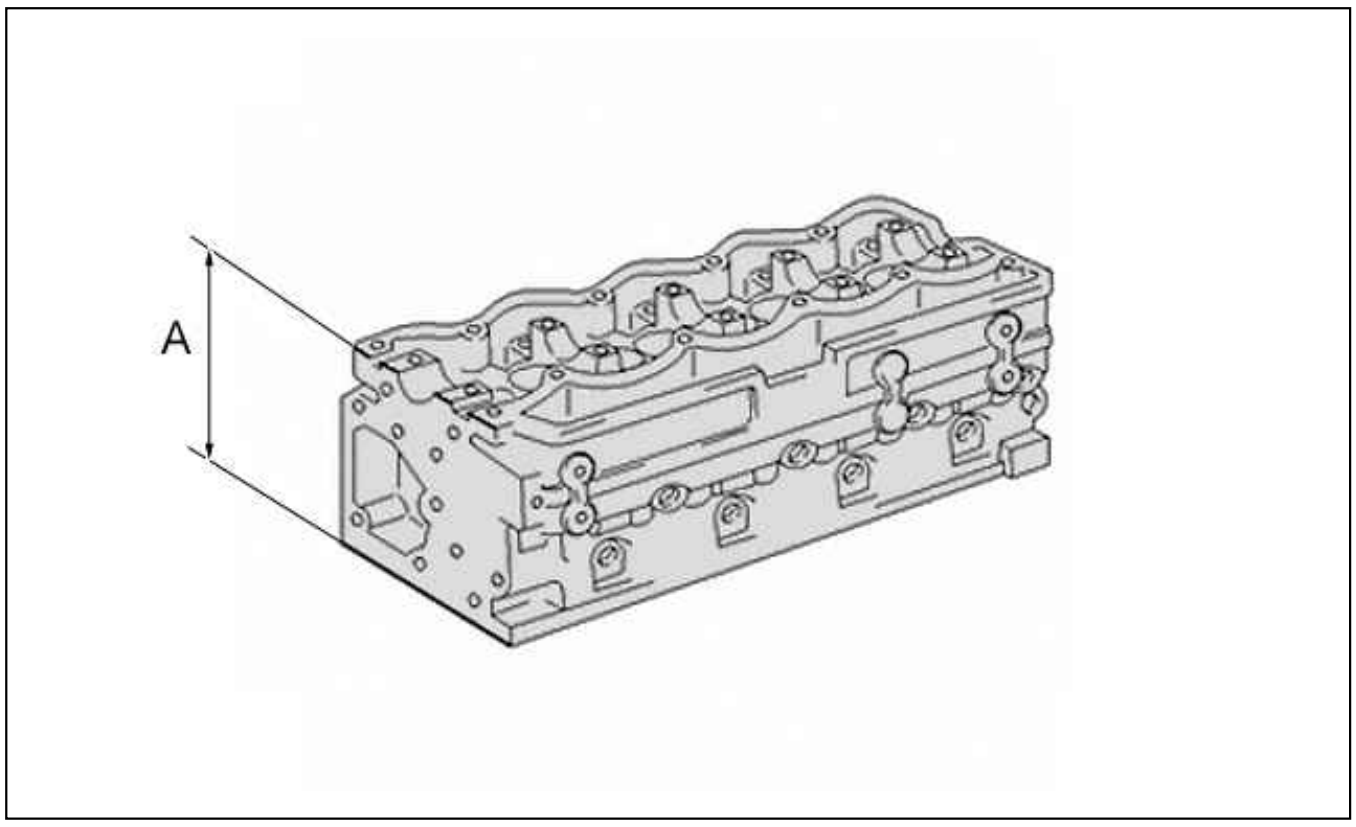

Figure : B1DP2AXD

" A" Height of a new cylinder head	112 ± 0,1 mm
Max. permissible bow	0,2 mm
Maximum grinding of the joint face	0,2 mm

2. Camshaft bearings

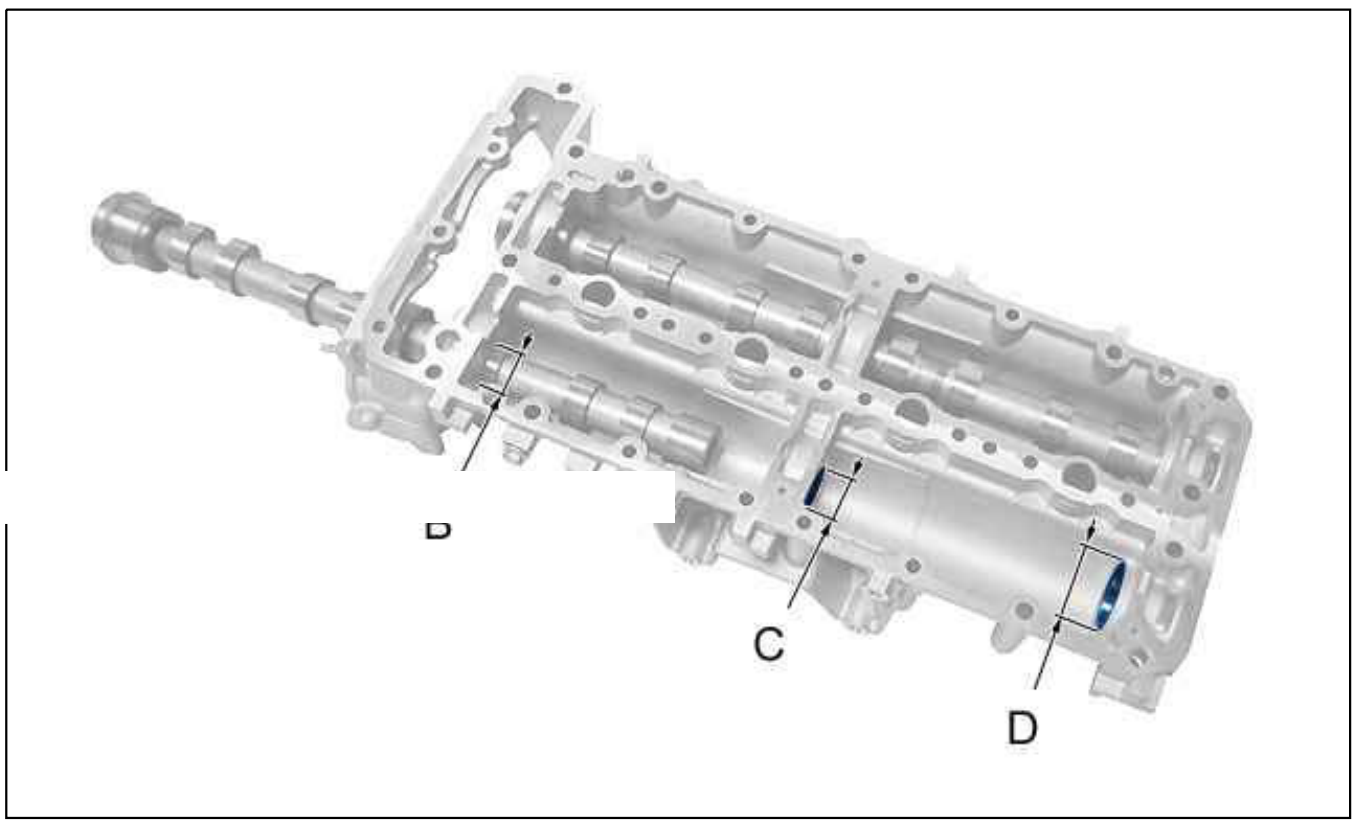

Figure : B1DP2AYD

Camshaft bearings	Nominal dimension
Diameter "B"	48,988 (+ 0,024 , 0) mm
Diameter "C"	46,988 (+ 0,024 , 0) mm
Diameter "D"	35,988 (+ 0,024 , 0) mm

The camshaft bearings cannot be ground.
Replace the cylinder head if the camshaft bearings are worn.

3. Cylinder head gasket

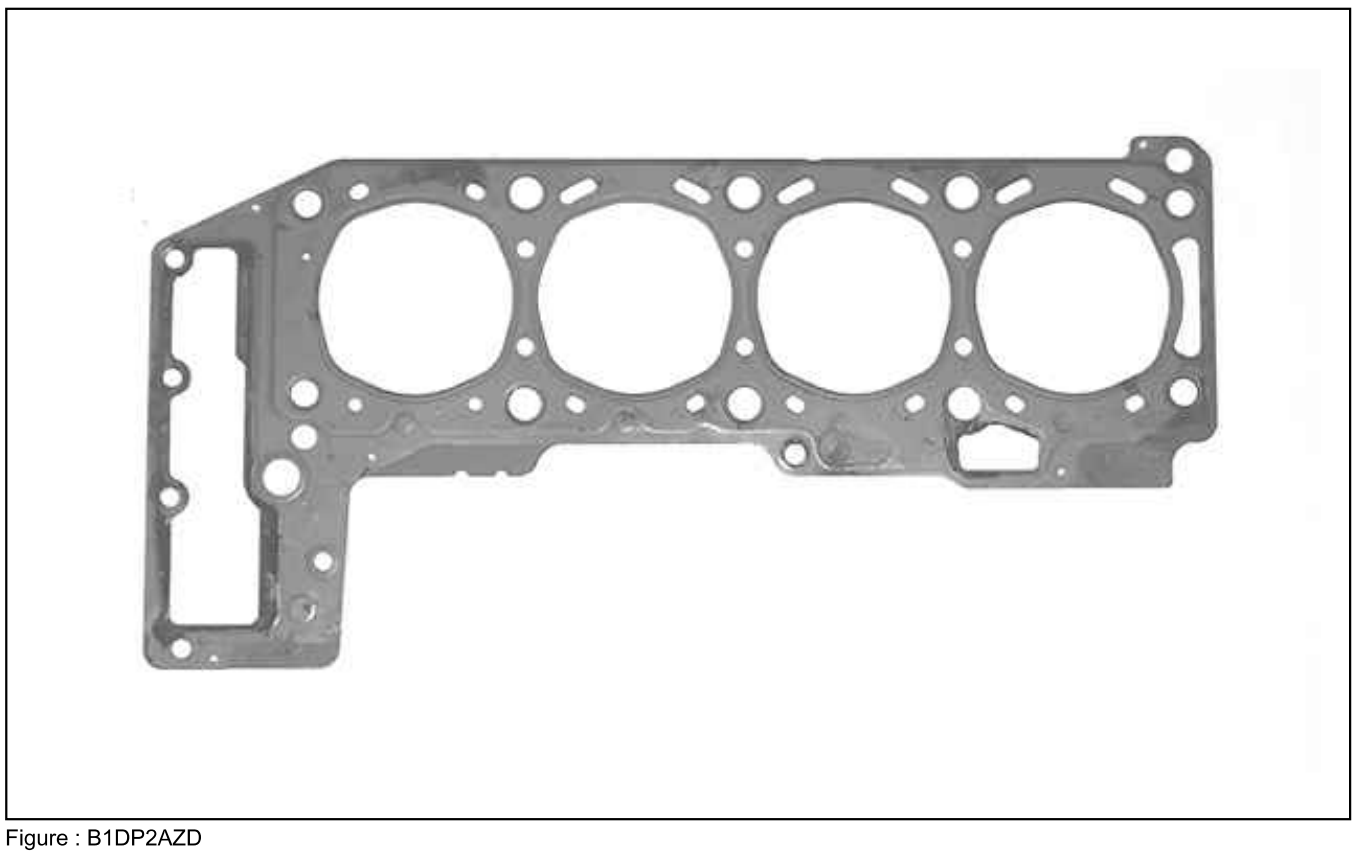

Figure : B1DP2AZD

Piston protrusion	Gasket thickness
0,30 (+ 0,30 , 0) mm	1,21 ± 0,08 mm

4. Cylinder head bolts

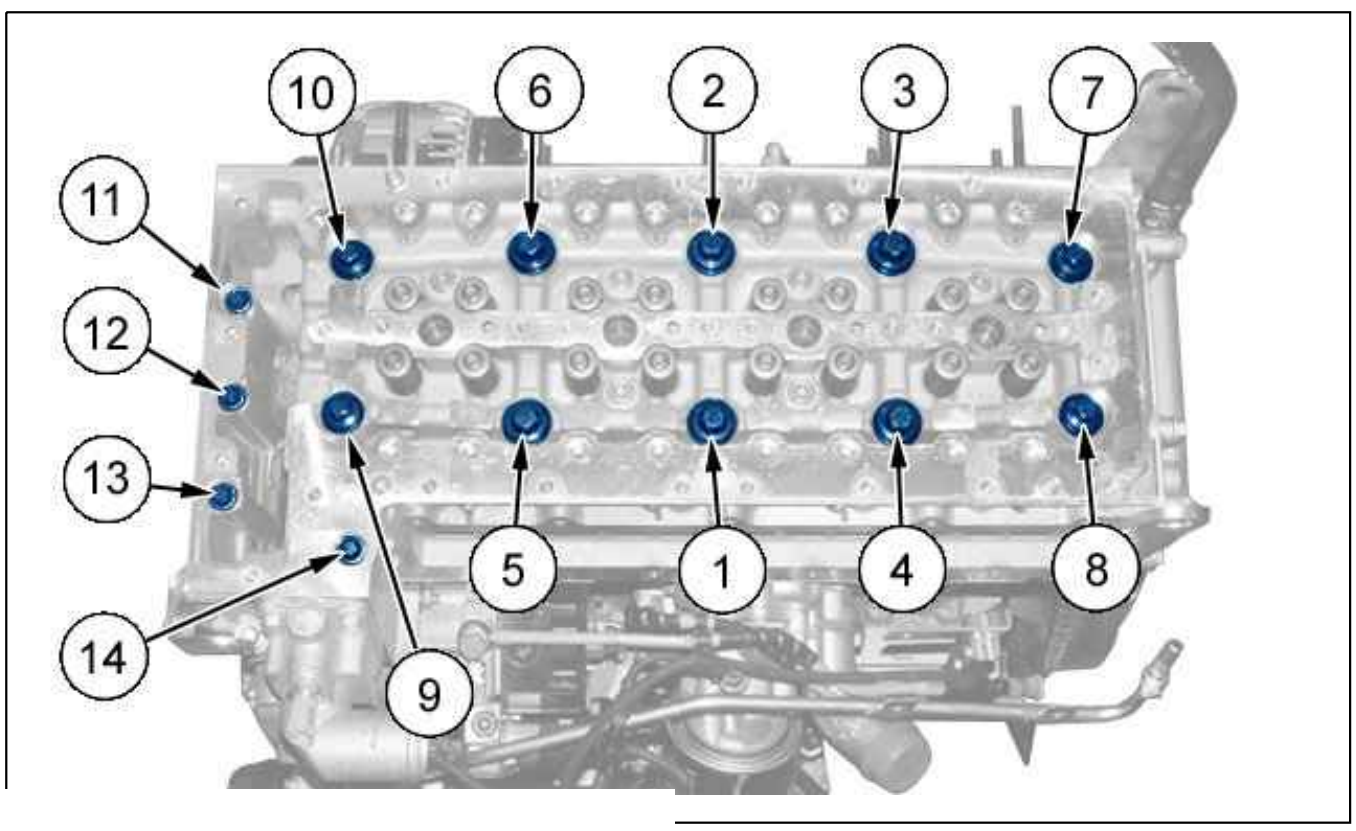

Figure : B1DP2B0D

CAUTION : The cylinder head screws must not be re-used (from 1 to 10).

CAUTION : Follow the tightening sequence (1 to 14).

Tightening procedure :

- Pre-tightening of the bolts (M15) to 13 ± 1 m.daN (1 to 6)
- Pre-tightening of the bolts (M12) to 6,5 ± 0,6 m.daN (7 to 10)
- Angular tighten the screws (M15) to 90 ± 1 ° (1 to 6)
- Angular tighten the screws (M12) to 90 ± 1 ° (7 to 10)
- Angular tighten the screws (M15) to 90 ± 1 ° (1 to 6)
- Angular tighten the screws (M12) to 60 ± 1 ° (6 to 10)
- Tightening of the bolts (M8) to 2,5 ± 0,3 m.daN (11 to 14)

DATA : VALVES - VALVE SPRINGS - TAPPETS

1. valves

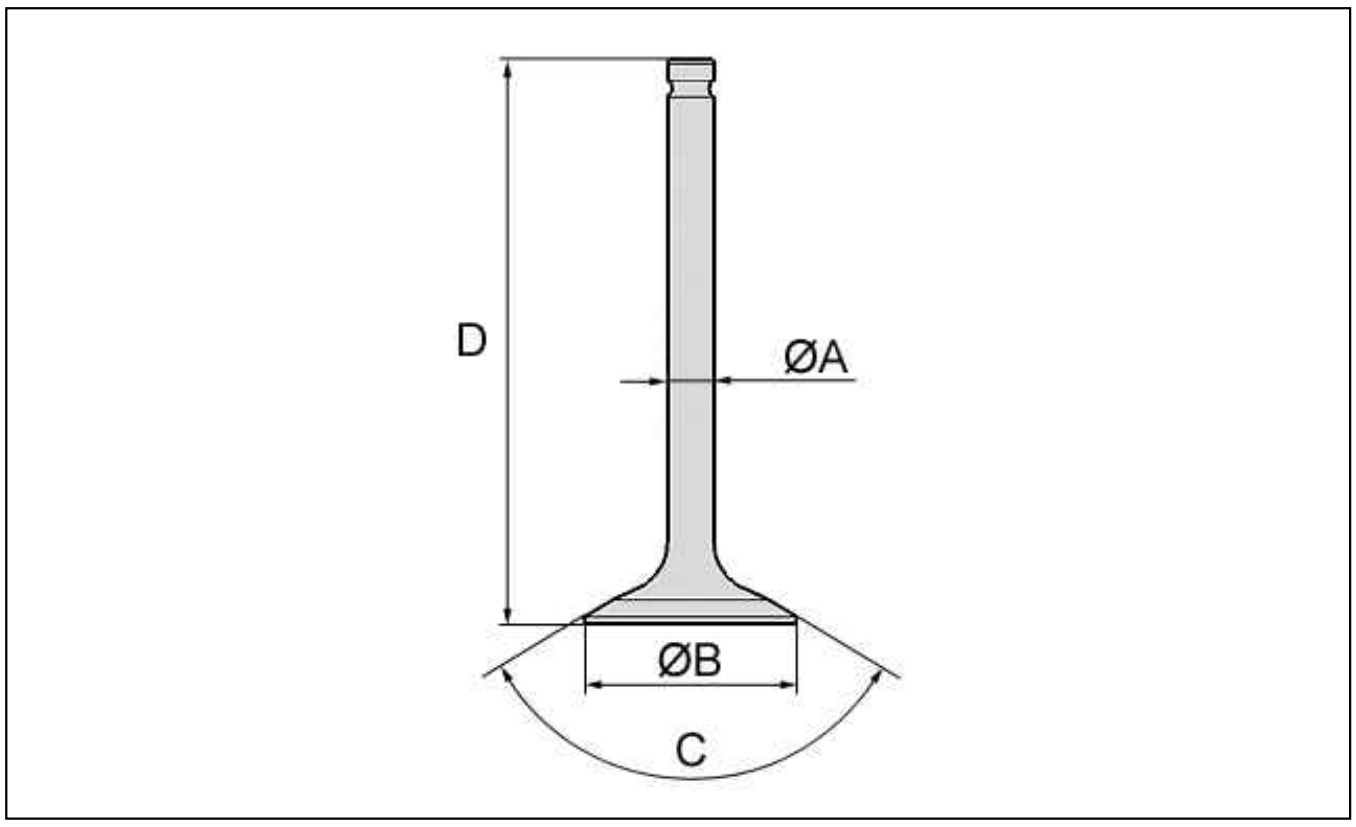

Figure : B1DP2B4D

	Inlet valve	Exhaust valve
Diameter A	5,985 (+ 0,015 ; 0) mm	5,975 (+ 0,015 ; 0) mm
Diameter B	32,4 ± 0,1 mm	32,4 ± 0,1 mm
Angle C	120°	120°
D length	119,95 mm	119,95 mm

2. Valve springs

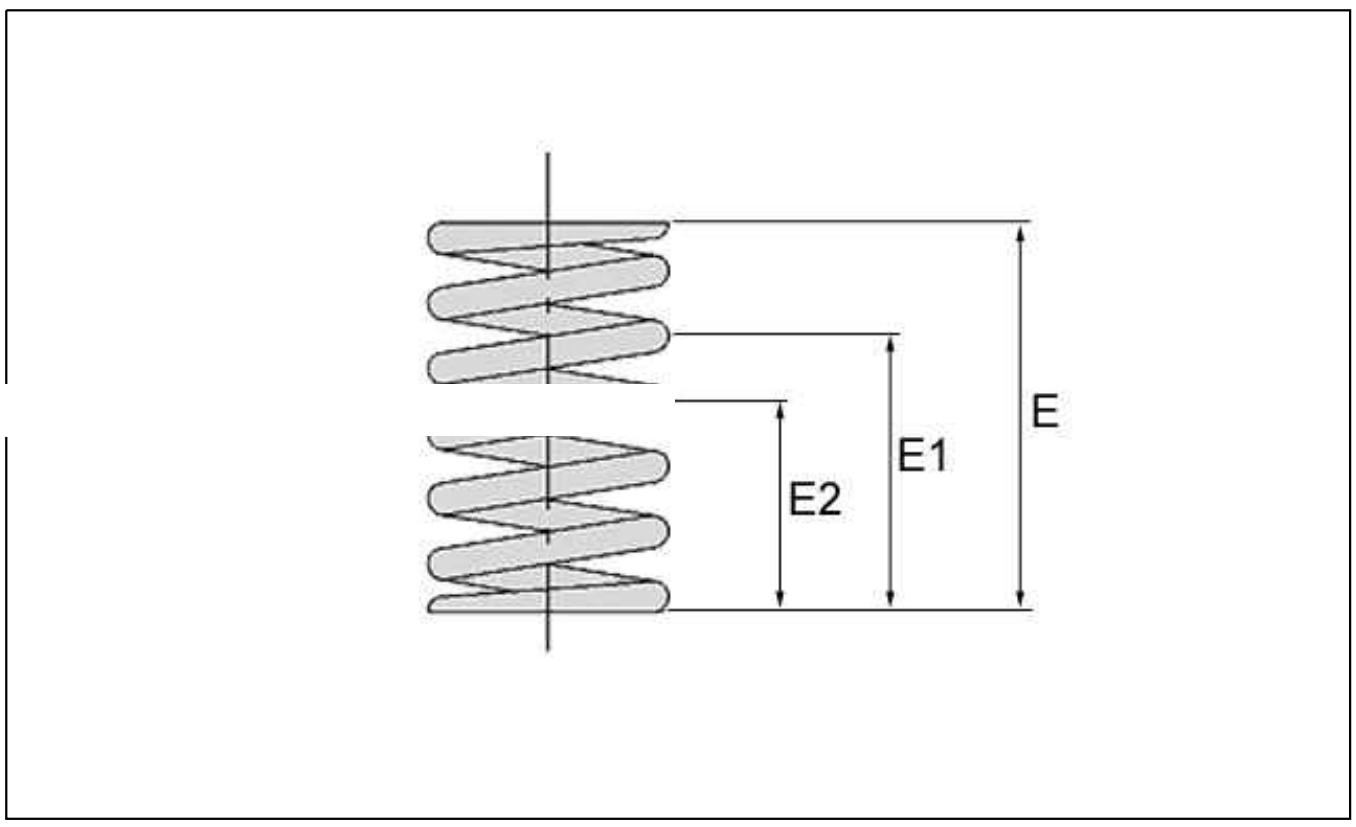

Figure : B1DP2B5D

Height	Valve springs
E	54 mm (Free state height)
E1	45 mm at 24,3 ± 1 daN
E2	35 mm at 53,3 ± 2 daN

3. tappets

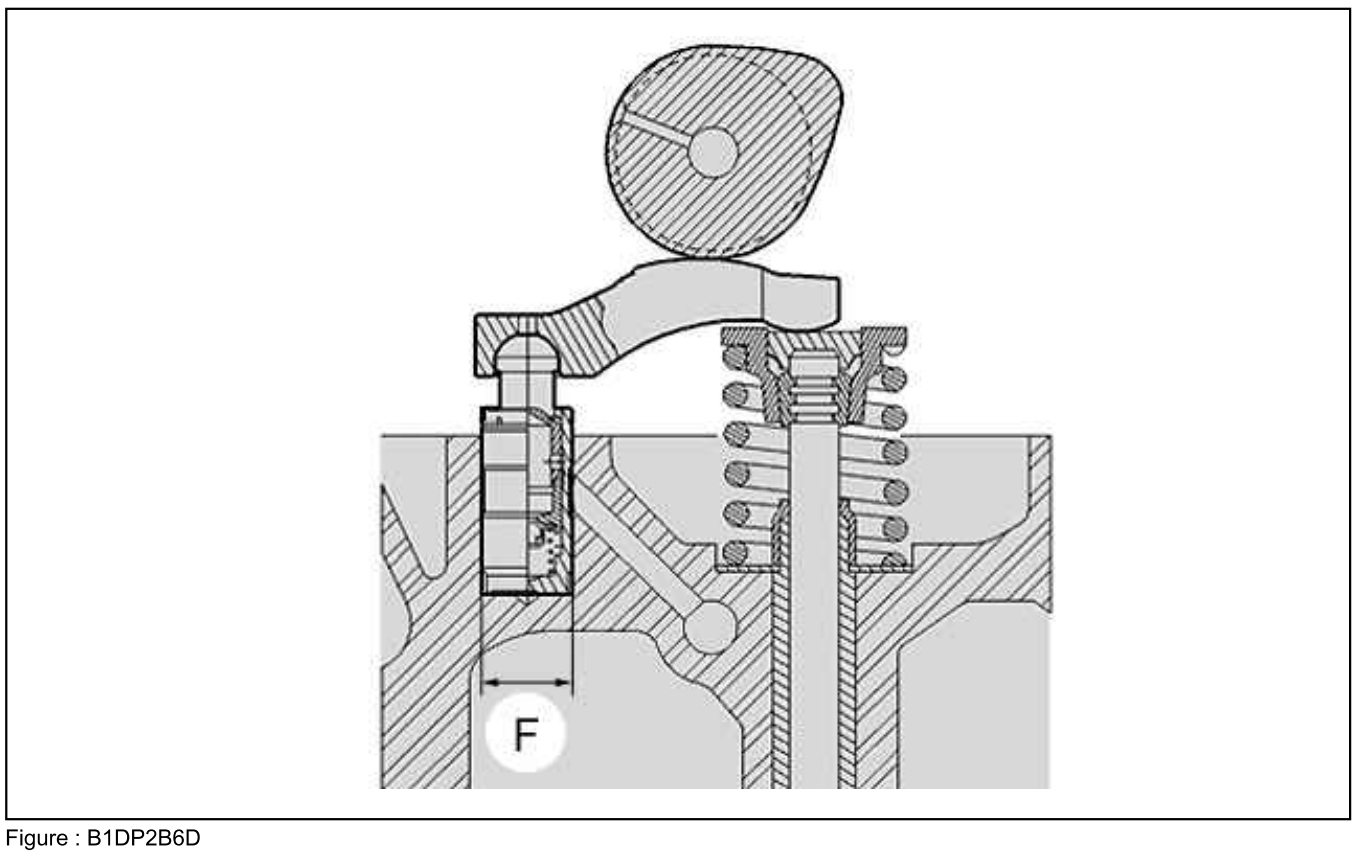

Figure : B1DP2B6D

Diameter F	tappets	Cylinder head
Nominal dimension	11,988 (+ 0,012 ; 0) mm	12,016 (+ 0,018 ; 0) mm

Operating clearance : 0,016 (+0,03) mm .

DATA : VALVE SEATS AND GUIDES

1. Location

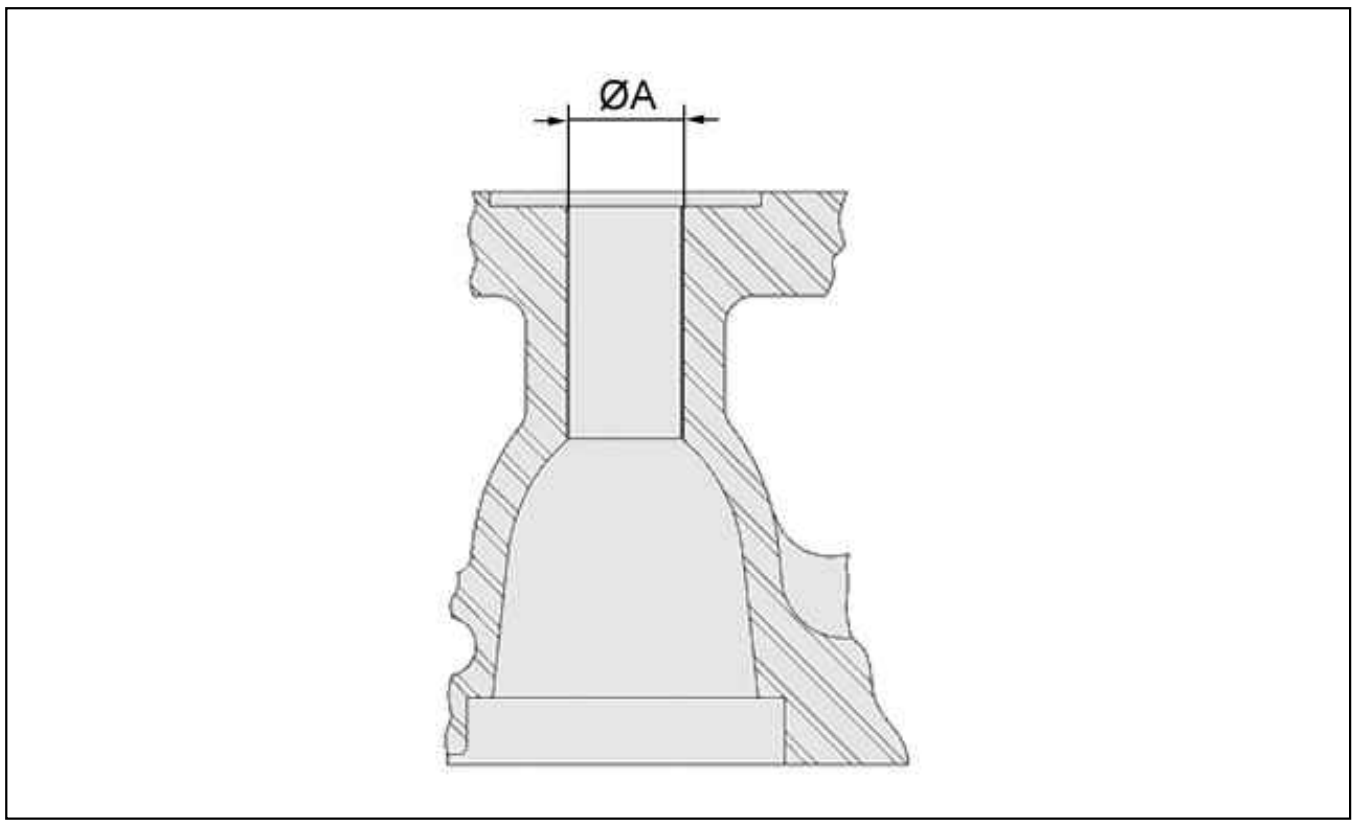

Figure : B1DP2B7D

Diameter "A"	
Nominal dimension	9,980 (+ 0,020 ; 0) mm
Repair size 1	10,030 (+ 0,020 ; 0) mm
Repair size 2	10,080 (+ 0,020 ; 0) mm
Repair size 3	10,230 (+ 0,020 ; 0) mm

2. Valve guides

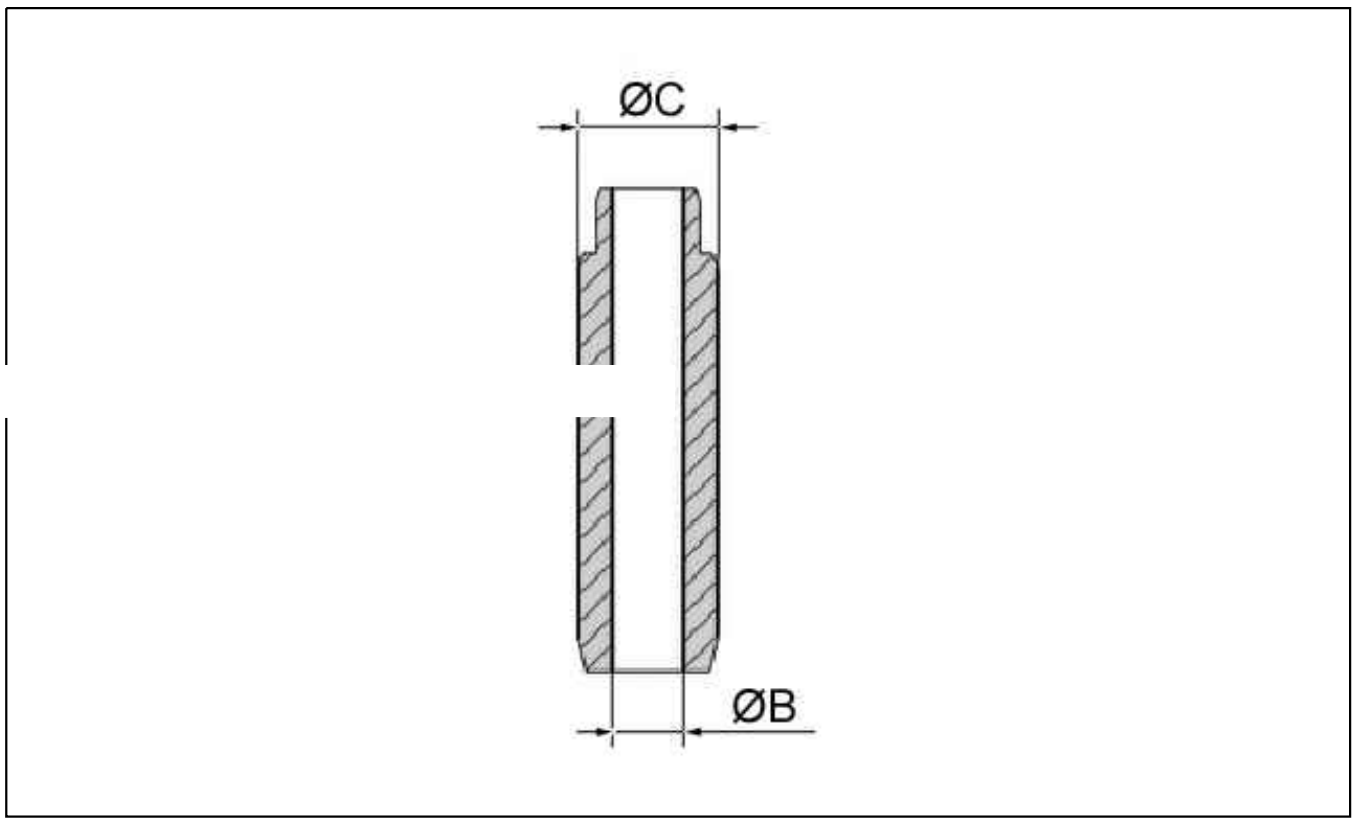

Figure : B1DP2B8D

Diameter " B "	Nominal dimension	6,023 (+ 0,015 ; 0) mm
Diameter " C "	Nominal dimension	10,028 (+ 0,011 ; 0) mm
	Repair size 1	10,078 (+ 0,011 ; 0) mm
	Repair size 2	10,128 (+ 0,011 ; 0) mm
	Repair size 3	10,278 (+ 0,011 ; 0) mm

3. Valve seats

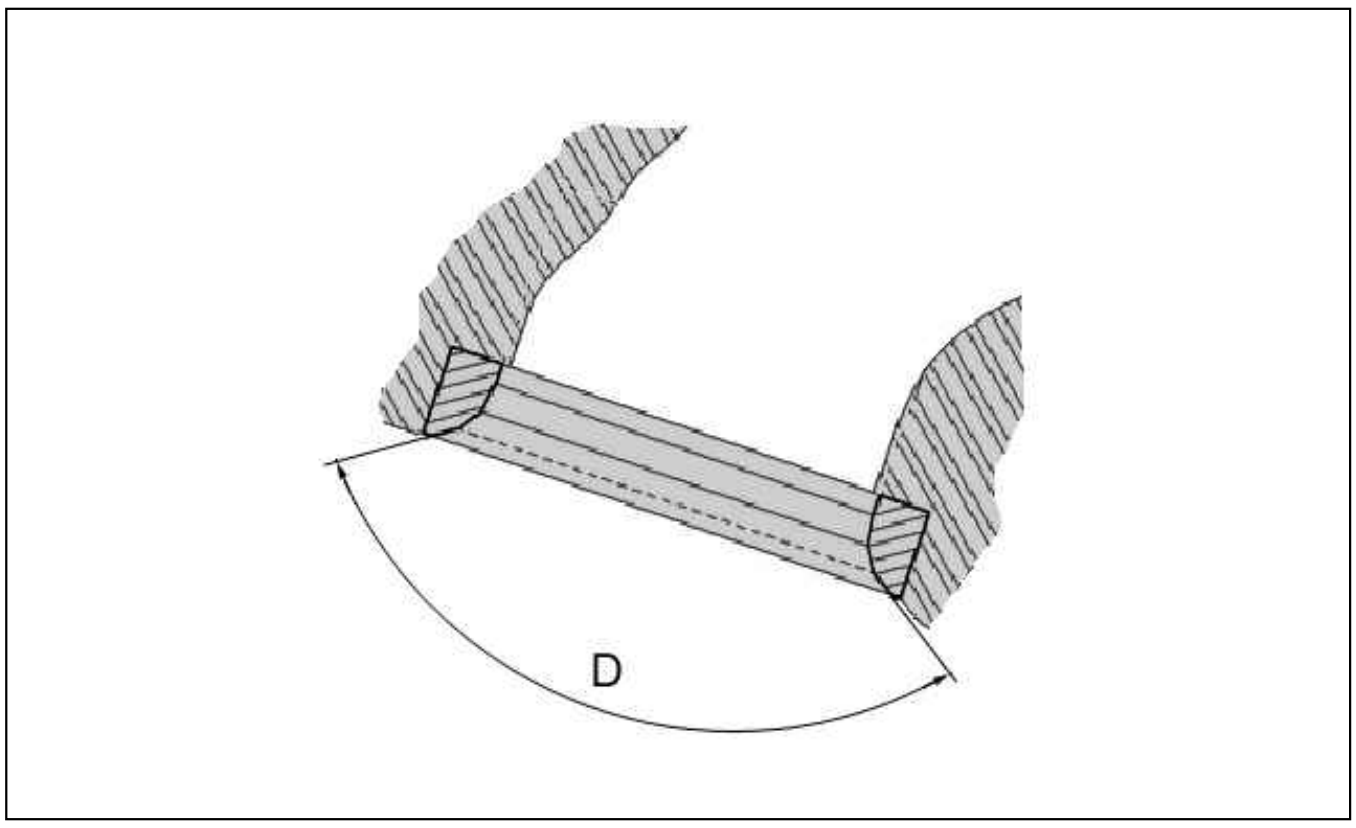

Figure : B1DP2B9D

Valve seats	Angle " D "
Inlet valve	120°
Exhaust valve	120°

DISMANTLING - REFITTING : CONRODS - PISTONS

1. Dismantling

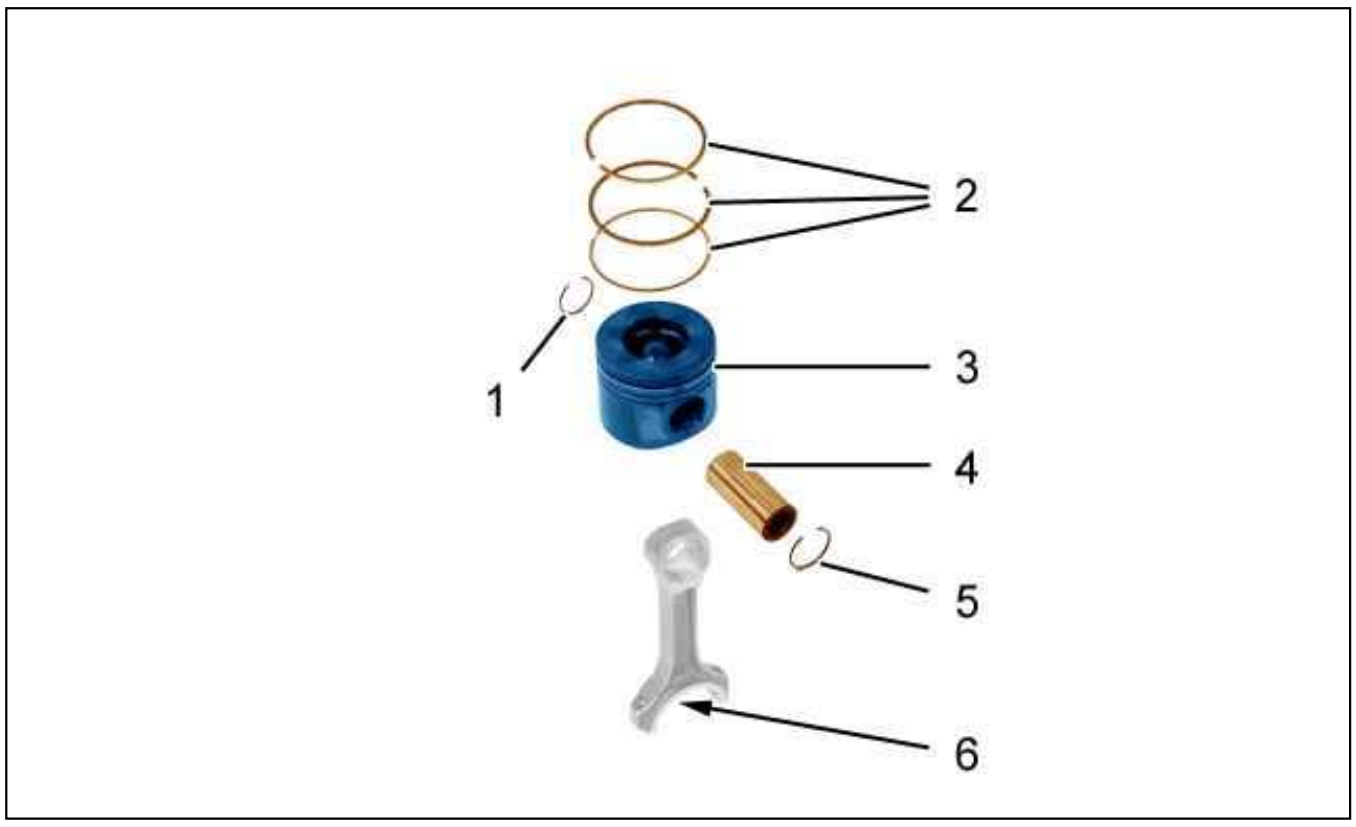

Figure : B1BPSCND

CAUTION : Mark the orientation of the conrod in relation to the piston.

Remove :

- The circlips (1), (5)
- The gudgeon pin (4)
- The piston (3)
- The piston rings (2)
- The bearing shell (6)
- The connecting rod

Proceed likewise for the other three bearing sets.

2. Refitting

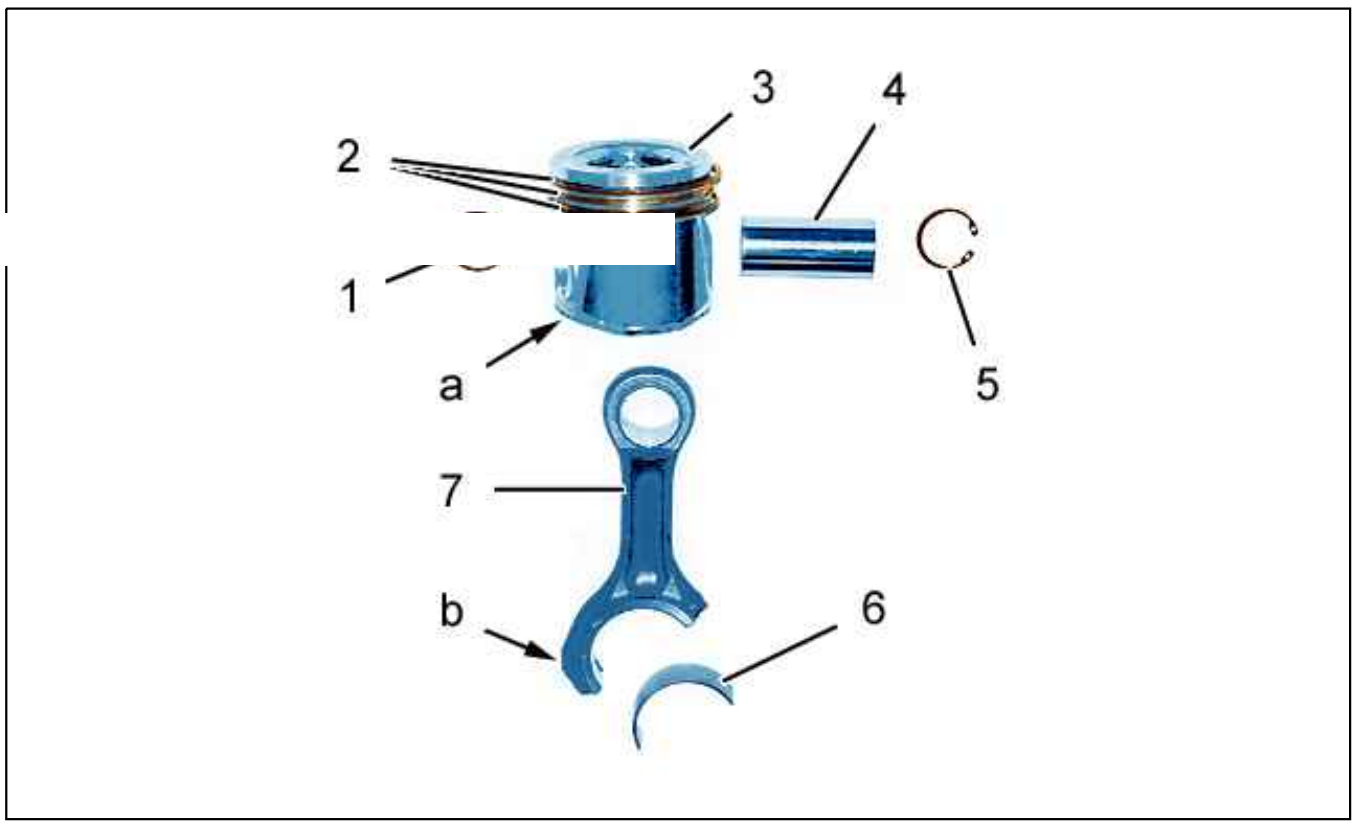

Figure : B1DM001D

CAUTION : The big end of the conrod at "b" must be positioned on the side of the nozzle cavity on the piston (at " a").

N.B. : The piston ring surfaces marked "TOP" must face upwards.

Oil :

- The bearing shell (6)
- The gudgeon pin (4)

Refit :

- The piston rings (2)
- The stop ring (1)
- The connecting rod (7)

- The gudgeon pin (4)
- The stop ring (5)
- The half bearing shells (6) (on rod)

Proceed likewise for the other three bearing sets.

REMOVING - REFITTING : ENGINE/GEARBOX ASSEMBLY

ESSENTIAL : Observe the safety and cleanliness recommendations .

1. Tooling

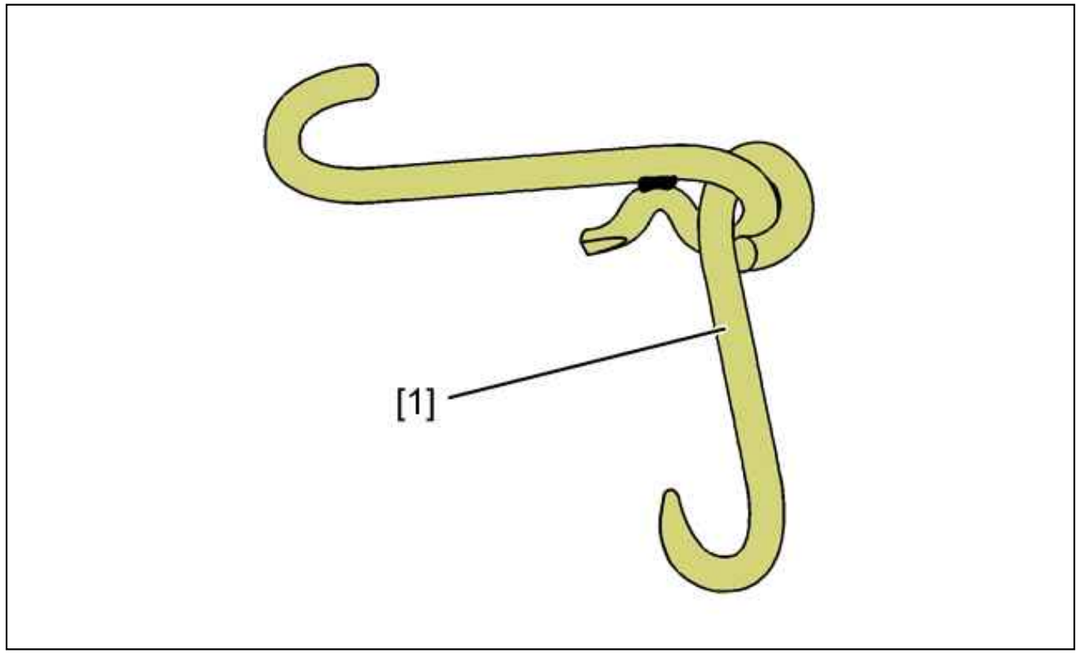

Figure : E5AP32KD

Reference	Designation	Reference	Reference
[1]	Bonnet retaining hook	5706-T	(-).1331

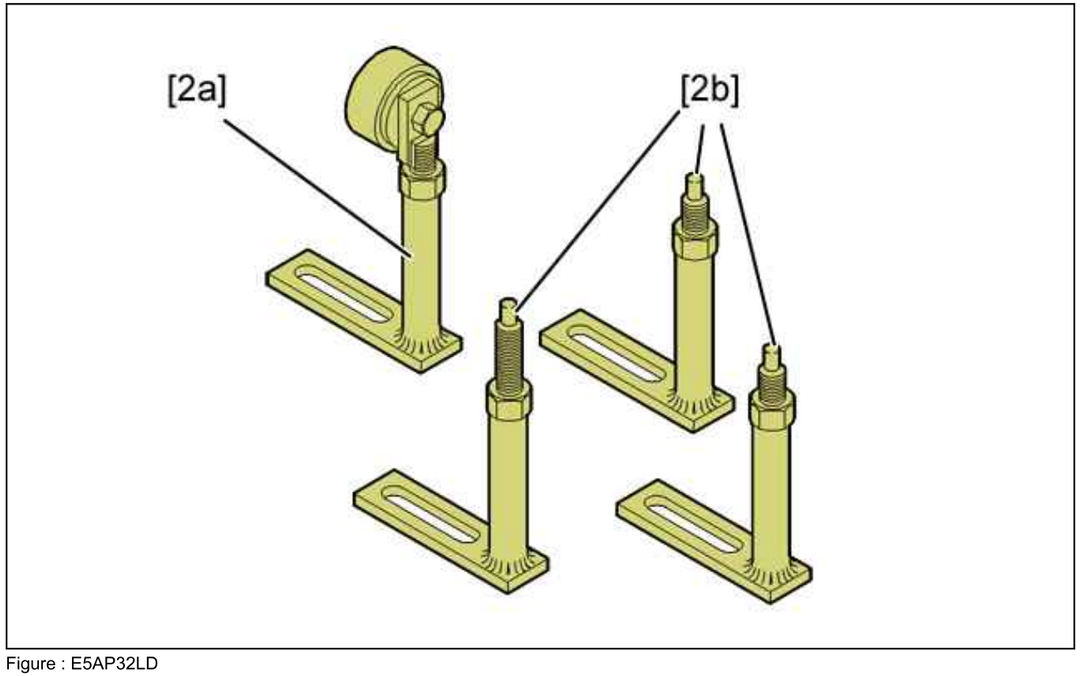

Figure : E5AP32LD

Reference	Designation	Reference	Reference
[2a]	Engine mounting with reversible tool	5704-T	(-).0005
[2b]	engine supports	5704-T	(-).0005

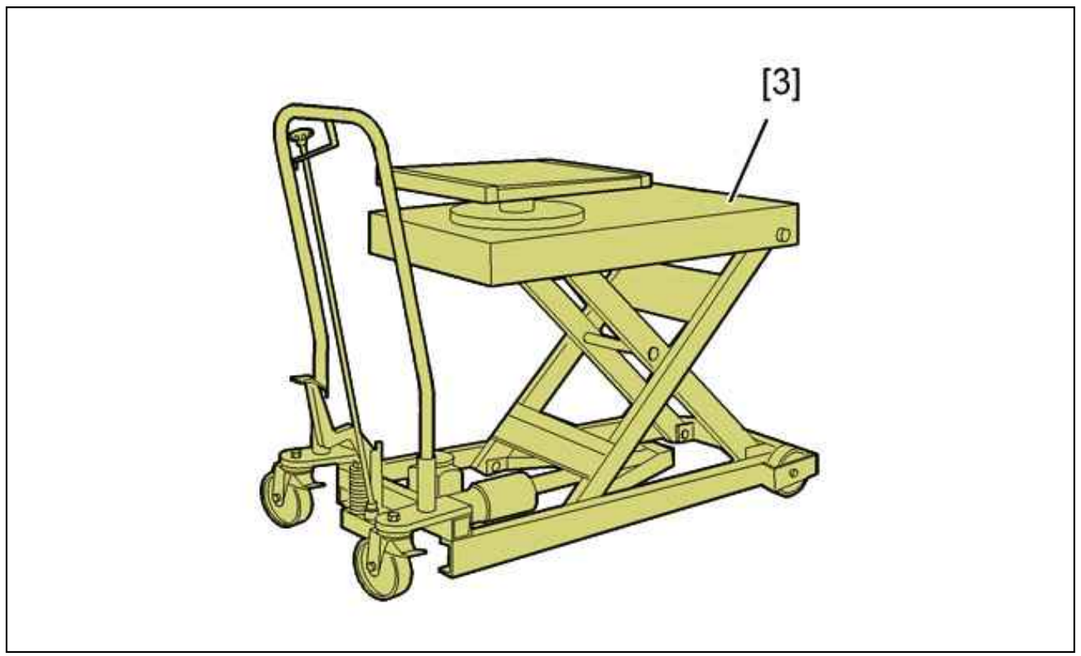

Figure : E5AP32MD

Reference	Designation	Reference	Reference
[3]	lifting bench	5702-T.A	(-).0004

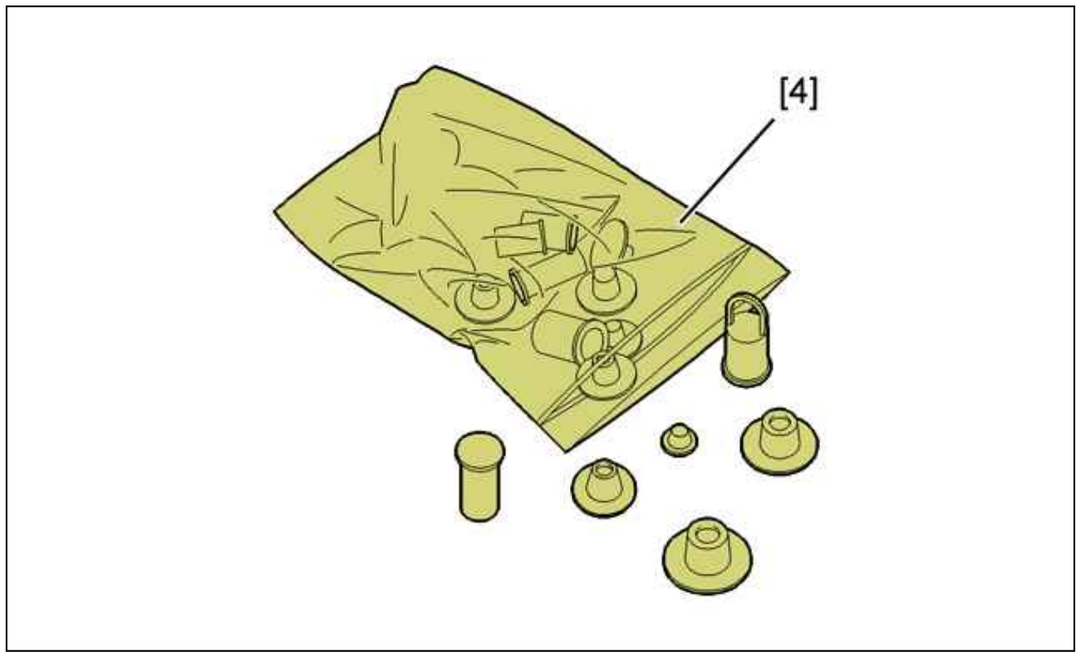

Figure : E5AP32ND

Reference	Designation	Reference	Reference
[4]	plugs kit	(-).0188 T	(-).0188 T

2. Removing

ESSENTIAL : Respect the safety and cleanliness recommendations that are specific to high pressure diesel injection (HDi) engines .

CAUTION : After switching off the ignition: wait 15 minutes before disconnecting the battery, to ensure that the initialisations of the various ECUs are memorised.

Disconnect the battery.
Place the vehicle on a 2-post lift.

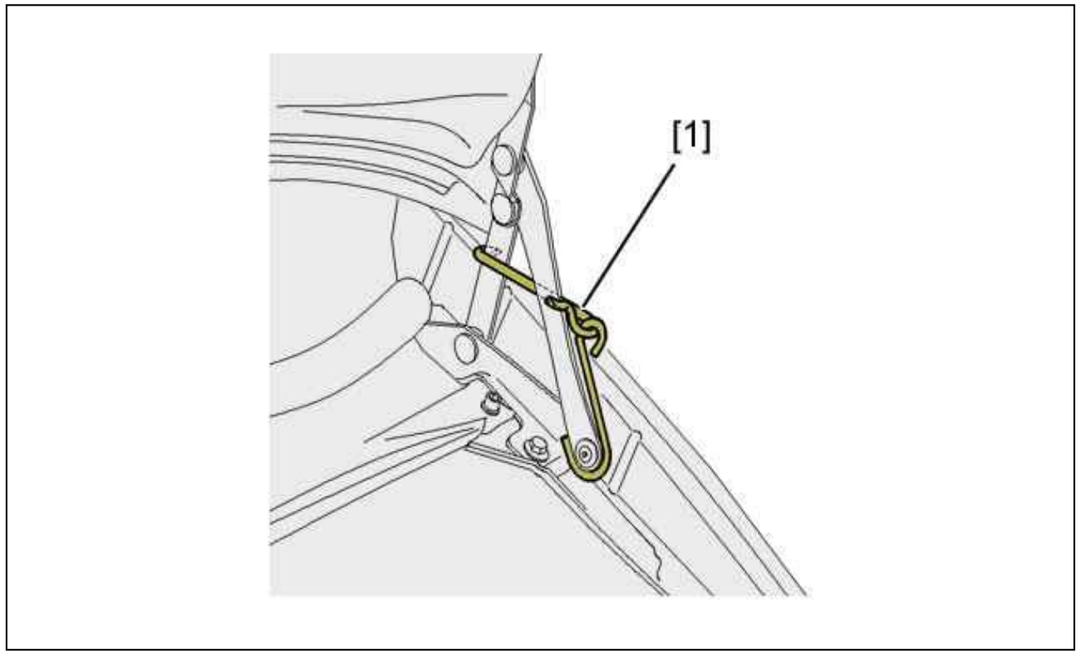

Figure : B1BPRWYD

Put the bonnet in the vertical position ; Using tool [1].

Drain :

- The engine cooling system (see the relevant operation)
- The gearbox (see the relevant operation)

Remove :

- The central section of the lower front panel (see the relevant operation)
- The right-hand headlamp (see the relevant operation)
- The front wheels
- The protective panel under the engine
- The drive shafts (see the relevant operation)
- The pre-catalytic converter (see the relevant operation)

Uncouple :

- The cooling radiator pipes
- The turbocharger air cooler pipe (right hand side)
- The heater matrix inlet and outlet hoses
- The expansion bottle pipe
- The fuel supply and return pipes

Plug the fuel supply and return pipes ; Using tool [4].

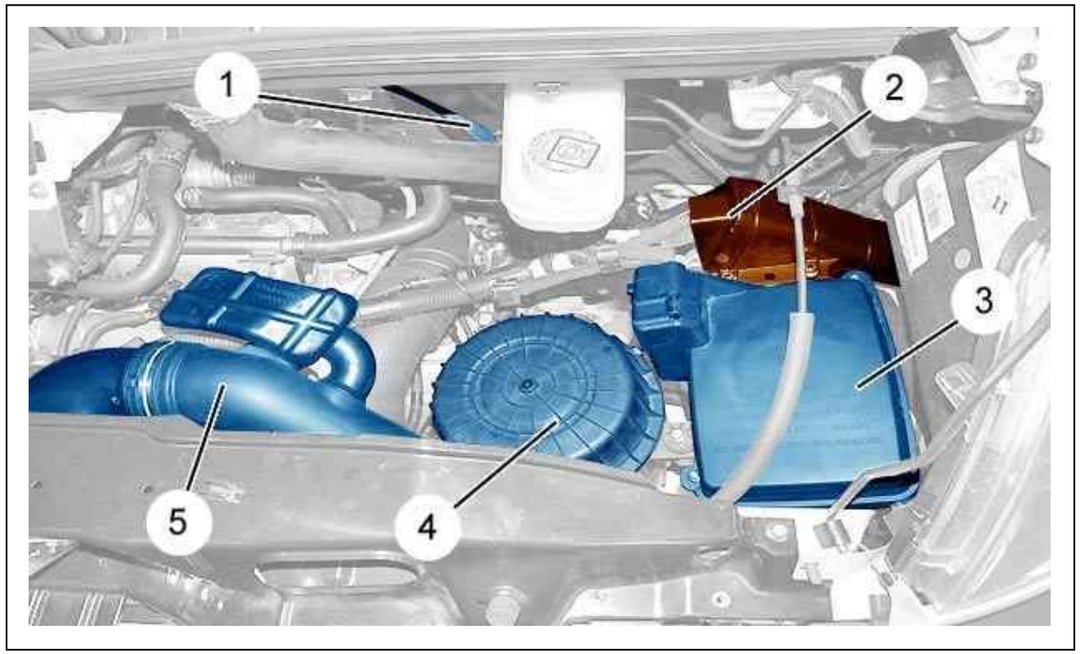

Figure : B1BM001D

Disconnect the air flow meter .
Remove :

- The braking assistance pipe (1)
- The electrical harness shield (2)
- The cover (3)
- The air filter housing (4)
- The air duct (5)

Plug the braking assistance pipe ; Using tool [4].

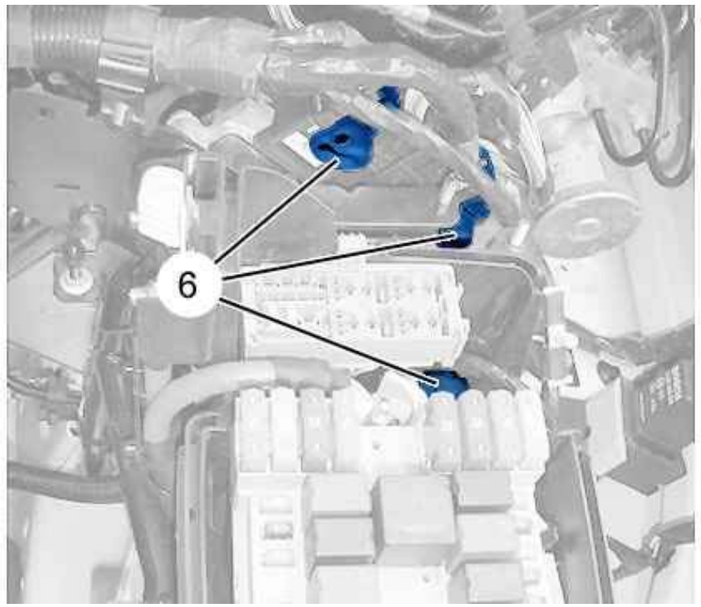

Figure : D4AM001D

Disconnect the electric harnesses (6).

2.1. Vehicle with air conditioning

Remove :

- The accessories drive belt (see the relevant operation)
- The fastening bolts of the refrigeration compressor clutch
- The clip securing the air conditioning pipes on the rear lifting plate

Move aside and suspend the air conditioning compressor on the side of the vehicle (Without opening the cooling circuit).

2.2. Subsequent operations

Lift and support the vehicle.
Detach and move aside :

- The clutch slave cylinder (euro4)
- The hydraulic stop (euro5)
- The earth cable
- The starter electrical supply
- The gear control cables

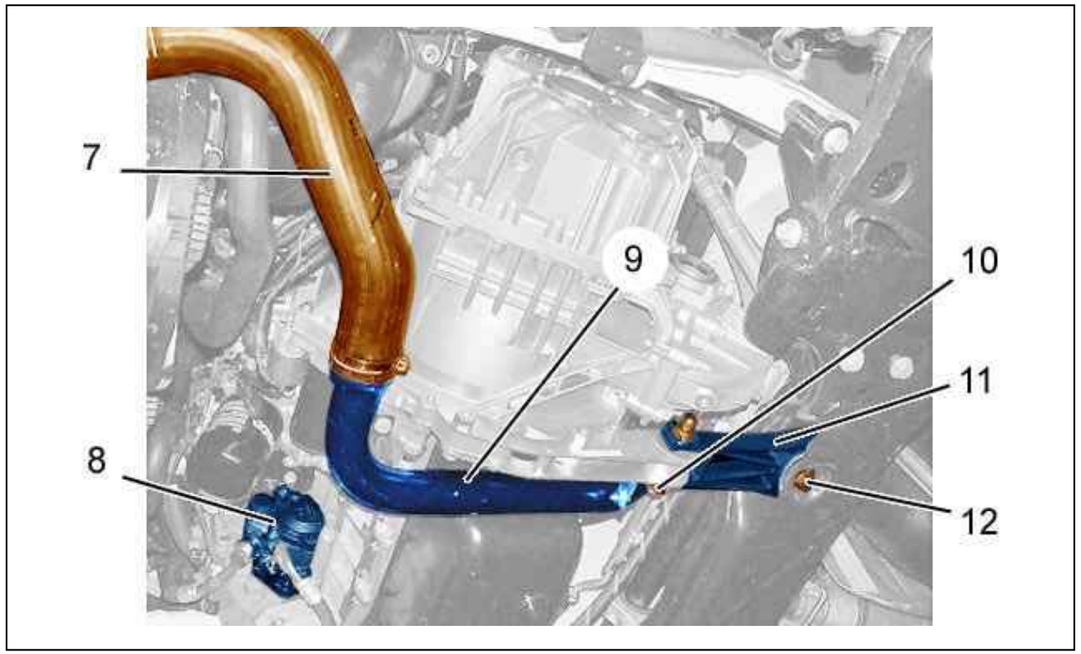

Figure : B2CM001D

Remove :

- The air duct (7)
- The air duct (9)
- The bolts (10), (12)
- The lower torque reaction link (11)
- The power steering pump (8) (see the relevant operation)

Move aside and suspend the power steering pump (8).
Put lifting table [3] together with its supports [2b], [2a] in position under the engine.
Lift the elevating platform [3].

2.3. Alternator side

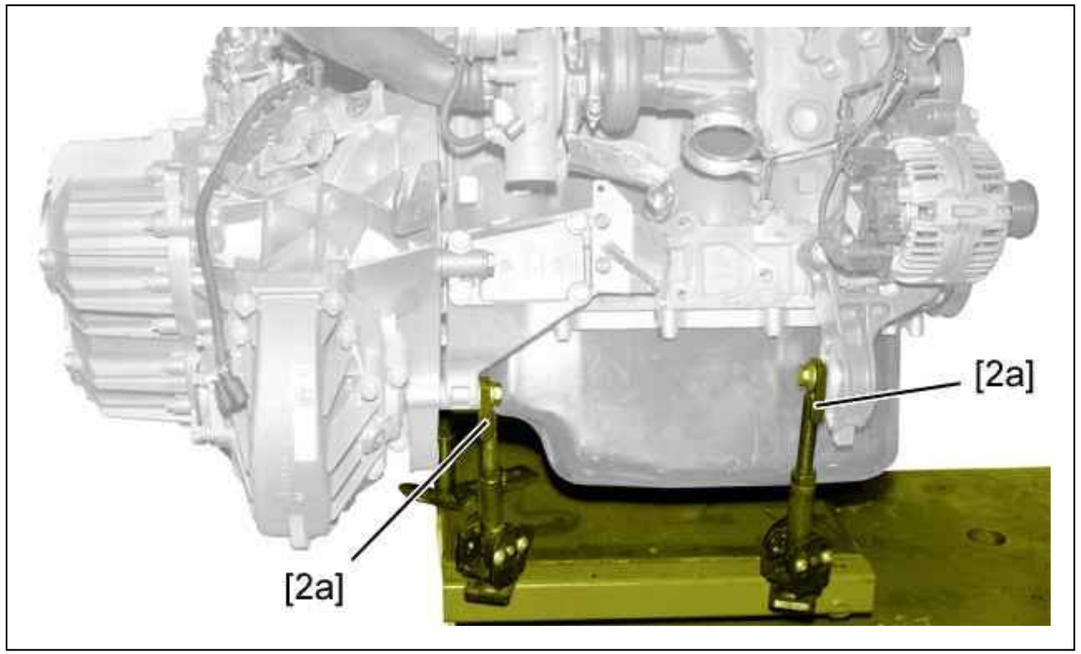

Figure : B1CM001D

Fit a support [2a] on a gearbox fixing .
Place another support [2a] in the drive shaft bearing (On the right-hand side).

2.4. Oil filter side

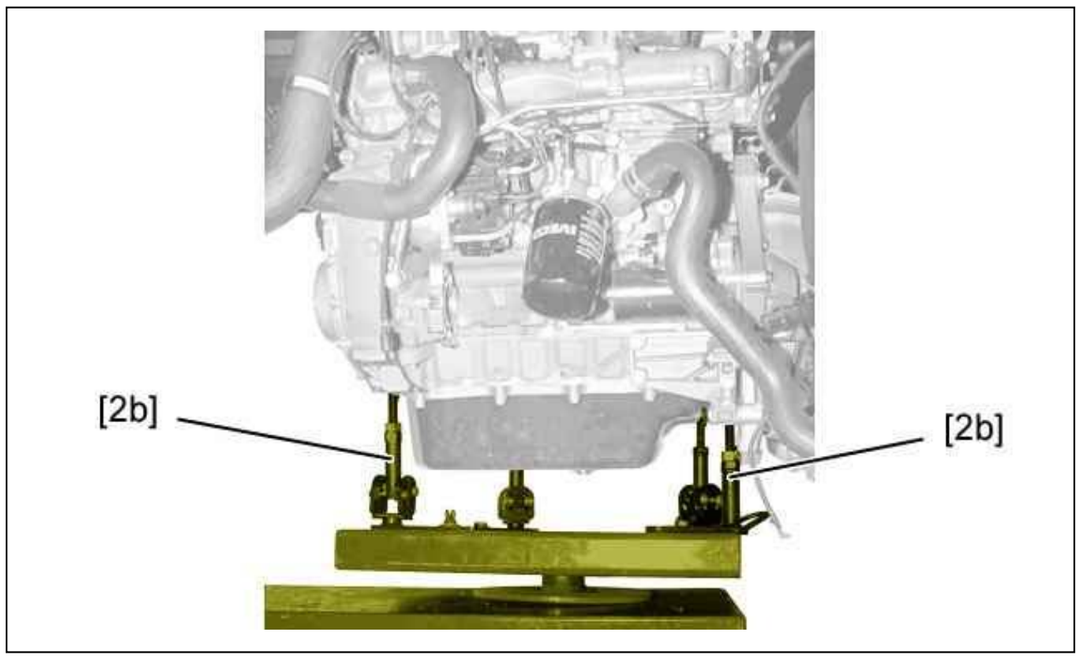

Figure : B1CM002D

Position : The tools [2b] in the recess holes of the cylinder block.

3. Removing (continued)

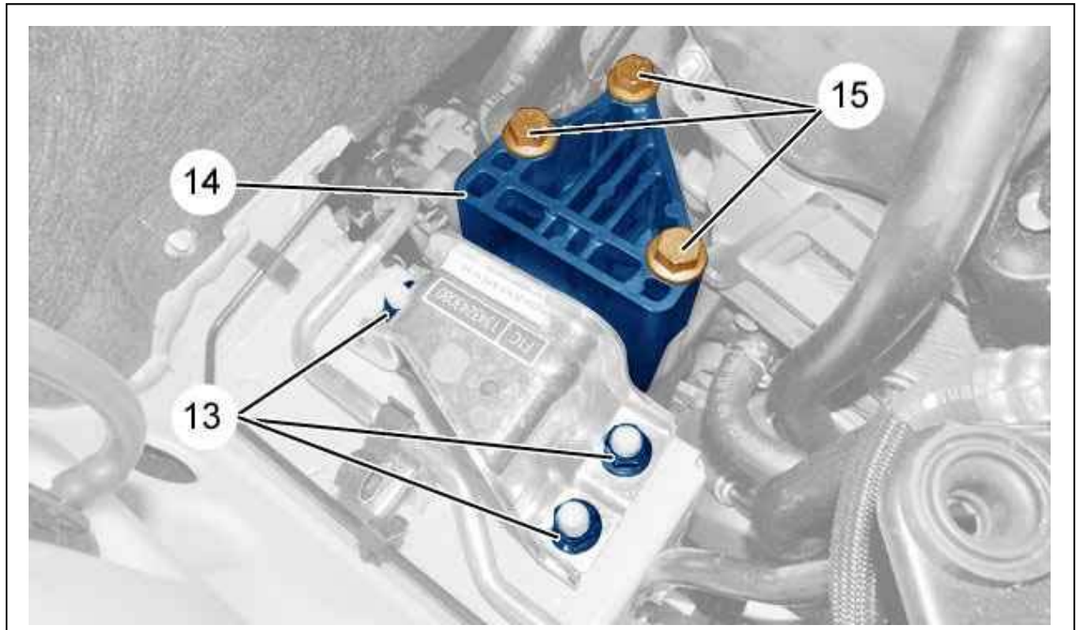

Figure : B1HM001D

Remove :

- The nuts (13)
- The bolts (15)
- The right-hand engine mounting (14)

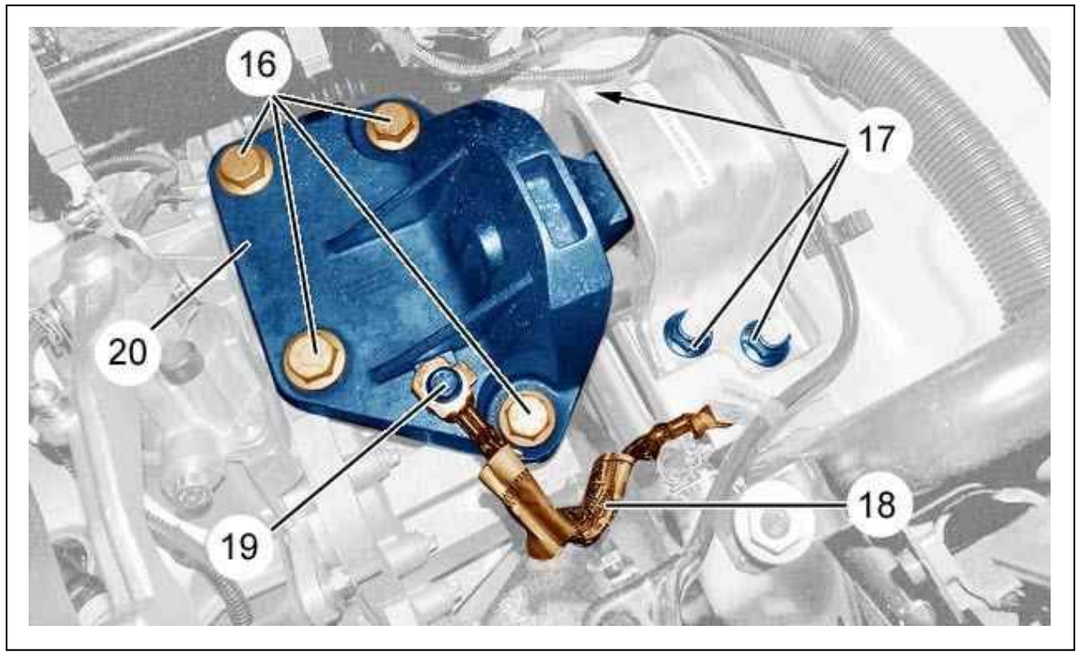

Figure : B1BM002D

Remove bolts (19).
Release : The earth braid (18).
Remove :

- The bolts (16)
- The nuts (17)
- The left-hand engine mounting (20)

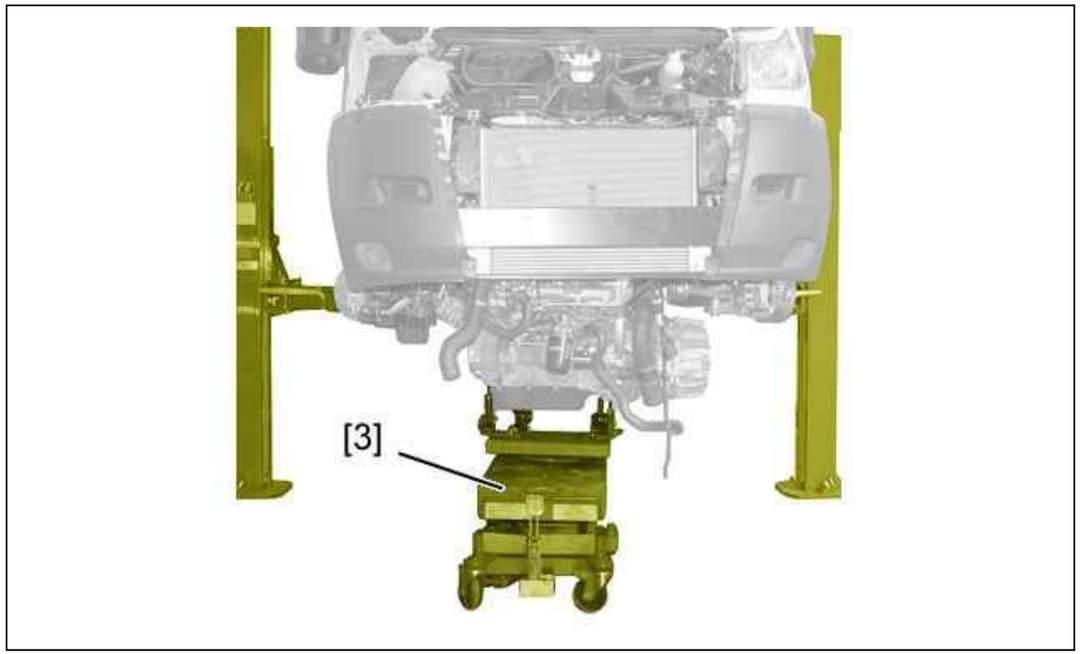

Figure : C4AM001D

CAUTION : Ensure that there is no fouling between the engine-gearbox assembly and the body.

Slowly lower the engine and gearbox assembly ; Using the lifting table [3].
Manoevre the engine-gearbox assembly to facilitate removal.
Remove the power unit assembly (from below).
Move the engine-gearbox assembly away from under the vehicle.

4. Refitting

Place the engine/gearbox assembly on the hydraulic table [3].

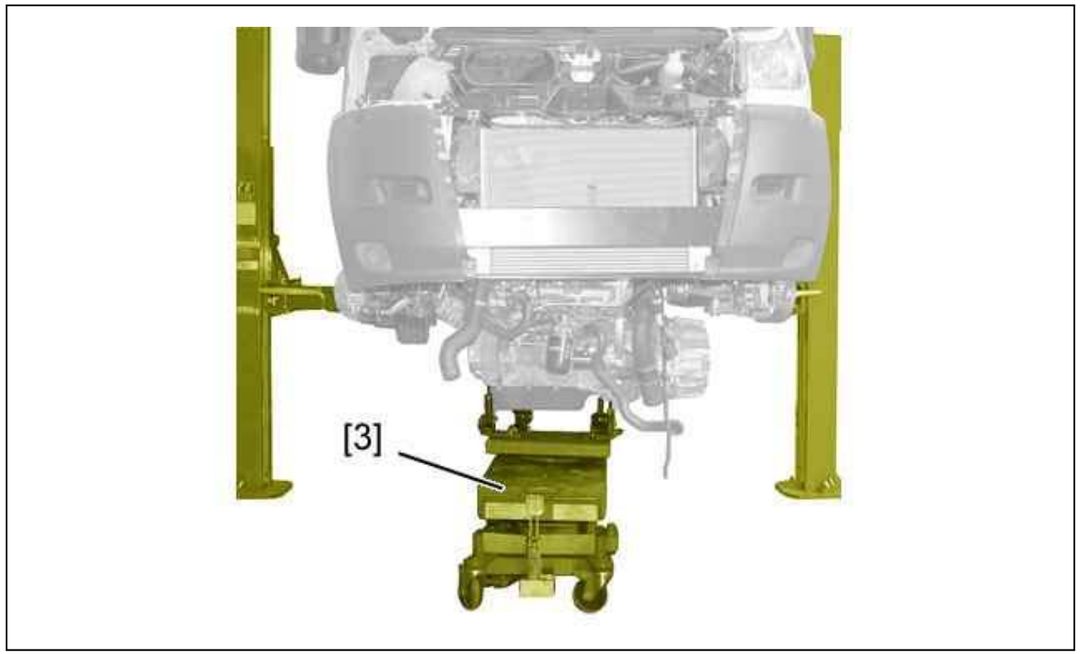

Figure : C4AM001D

CAUTION : Ensure that there is no fouling between the engine-gearbox assembly and the body. Manoevre the engine-gearbox assembly to facilitate its repositioning.

Refit the engine-gearbox assembly (from underneath the vehicle).
Refit :

- The left-hand engine mounting (20)
- The nuts (17)
- The bolts (16)

Position : The earth braid (18).
Refit bolt (19).
Refit :

- The right-hand engine mounting (14)
- The bolts (15)
- The nuts (13)

Tighten :

- The nuts (17) to 9,5 ± 0,5 daN.m
- The bolts (16) to 9,5 ± 0,5 daN.m
- The nuts (13) to 9,5 ± 0,5 daN.m
- The bolts (15) to 9,5 ± 0,5 daN.m

Unclamp the power unit assembly from the lifting table [3].
Remove the tools [2a].
Withdraw the lifting bench [3] from under the vehicle.
Refit :

- The lower torque reaction link (11)
- The (10) bolt
- The (12) bolt

- The air duct (9)
- The air duct (7)
- The power steering pump (8) (see the relevant operation)

Tighten :
- Screw (10) to 29 ± 1 daNm
- Screw (12) to 29 ± 1 daNm

Position and couple up :
- The gear control cables
- The starter electrical supply
- The earth cable
- The hydraulic stop (euro5)
- The clutch slave cylinder

Tighten the screws of the clutch slave cylinder to 2 ± 0,5 m.daN.

4.1. Vehicle with air conditioning

Position and fix : The air-conditioning compressor .
Tighten the bolts to 2,5 ± 0,25 daN.m.
Refit :
- The bracket securing the air conditioning ducts on the lifting plate
- The accessories drive belt (see the relevant operation)

4.2. Subsequent operations

Reconnect the electrical harnesses (6).
Refit :
- The air duct (5)
- The air filter housing (4)
- The braking assistance pipe (1)
- The electrical harness shield (2)
- The cover (3)

Reconnect the air flowmeter.
Couple up :
- The fuel supply and return pipes
- The expansion bottle pipe
- The heater matrix inlet and outlet hoses
- The turbocharger air cooler pipe (right hand side)
- The cooling radiator pipes

Refit :
- The pre-catalytic converter (see the relevant operation)
- The drive shafts (see the relevant operation)
- The front wheels
- The right-hand headlamp (see the relevant operation)
- The central section of the lower front panel (see the relevant operation)
- The protective panel under the engine

Fill and top up the level of the following of the following elements :
- engine
- gearbox (see the relevant operation)
- Cooling system (see the relevant operation)

CAUTION : Perform the operations to be carried out following reconnection of the battery.

Reconnect the battery.
Start the engine.
Top up the coolant level (If necessary).
Remove the tool [1].
Return the vehicle to its wheels.
Carry out :

- A road test
- A reading of the diagnostic memories

DISMANTLING : ENGINE

CAUTION : Observe the safety and cleanliness recommendations.

1. Recommended tools

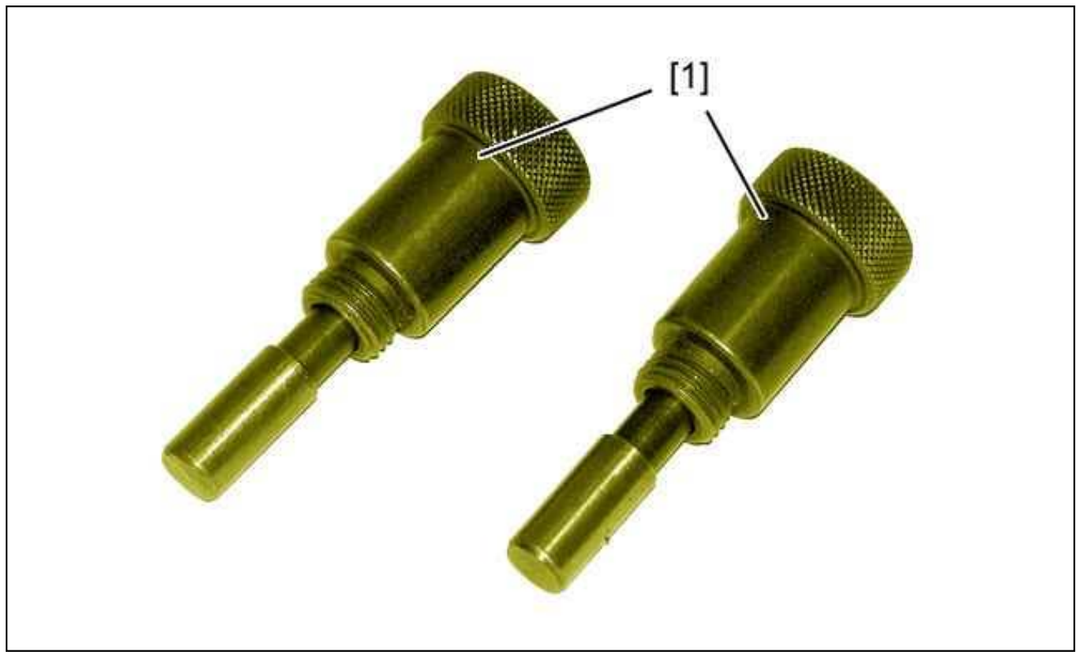

Figure : E5AP3T0D

Reference	Designation	Reference
[1]	Camshaft immobilisation pins	(-).0191/2 B

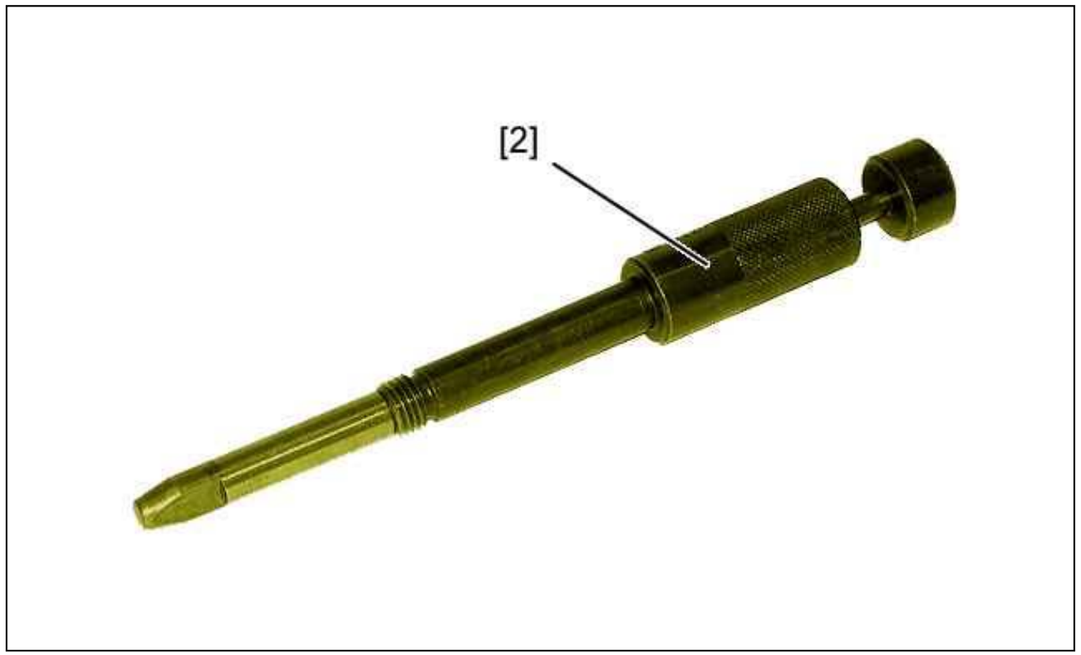

Figure : E5AM007D

Reference	Designation	Reference
[2]	Crankshaft setting and immobilisation pin	(-).0191/2 A

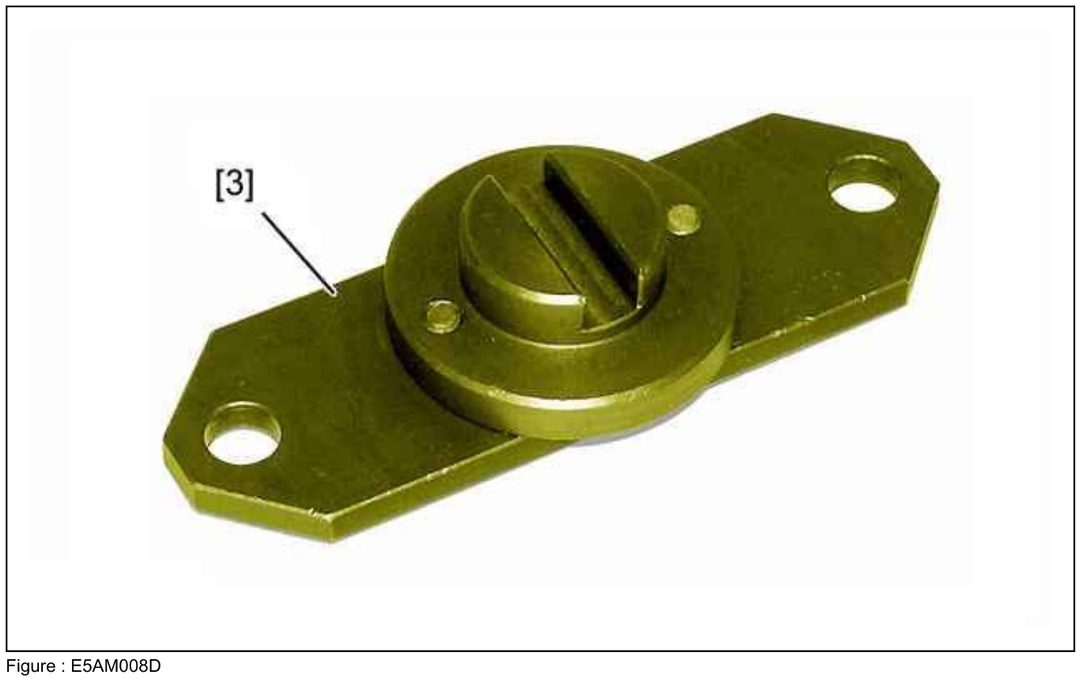

Figure : E5AM008D

Reference	Designation	Reference
[3]	Tool for immobilising the drive shaft of the power steering pump	(-).0191/2 J

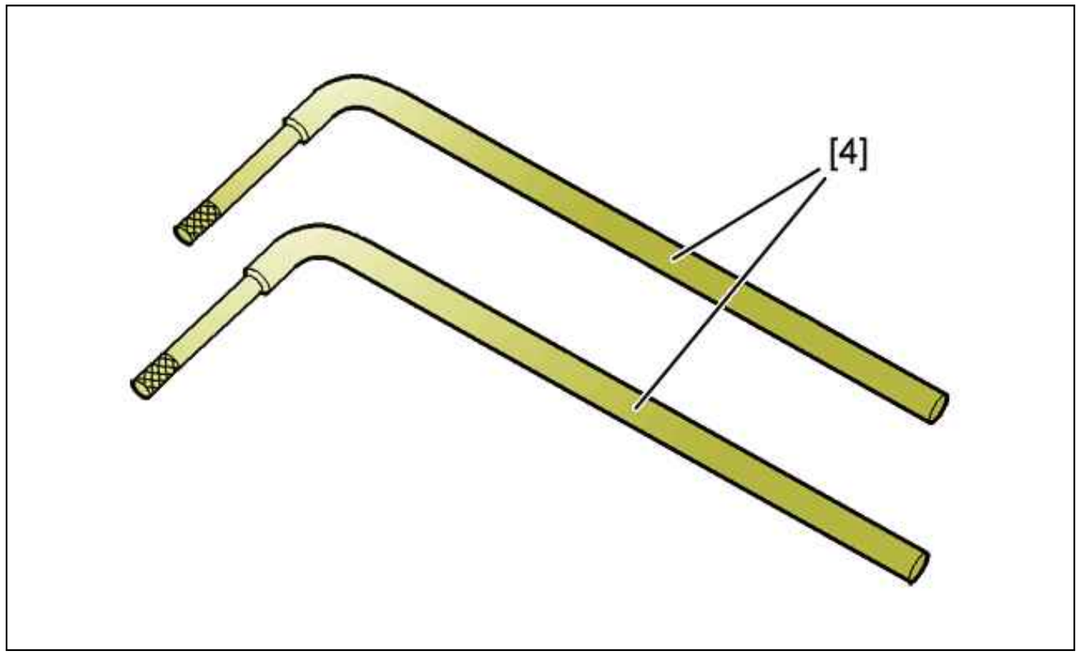

Figure : E5AP2VTD

Reference	Designation	Reference	Reference
[4]	set of levers for removing the cylinder head	(-).0188-L	149-T

2. Dismantling

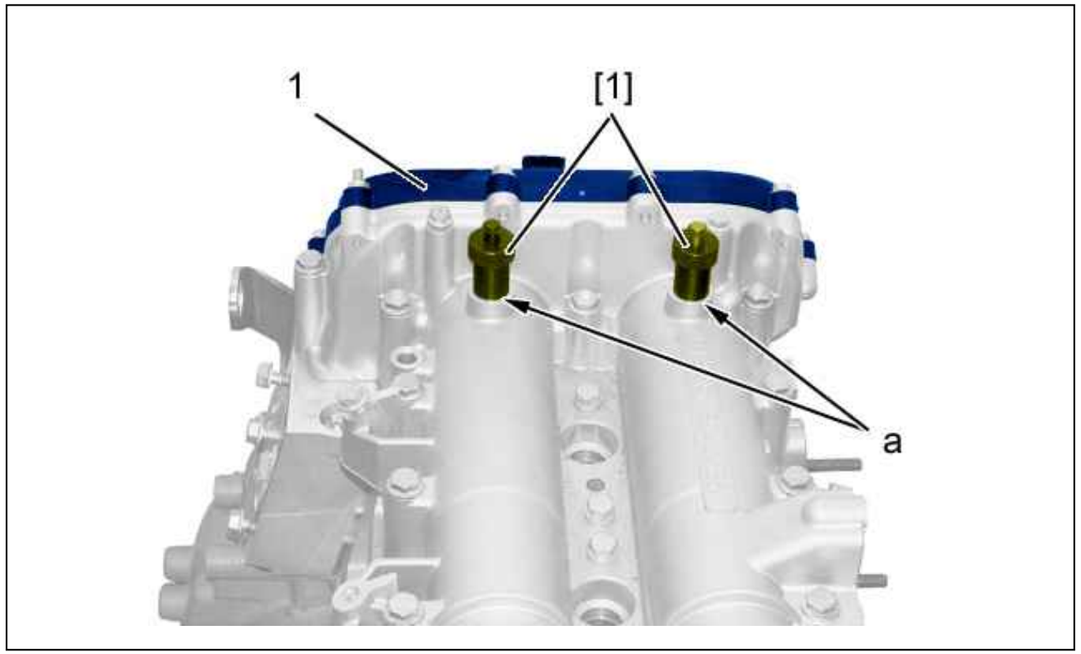

Figure : B1CM003D

Remove the plugs : On the camshaft bearing cap housing (at "a").
Fit the tools [1] (at "a").
Turn the crankshaft (clockwise) until the tools engage [1].

N.B. : The tools [1] must screw into the camshaft main bearing cap casing .

Remove the upper timing cover (1).

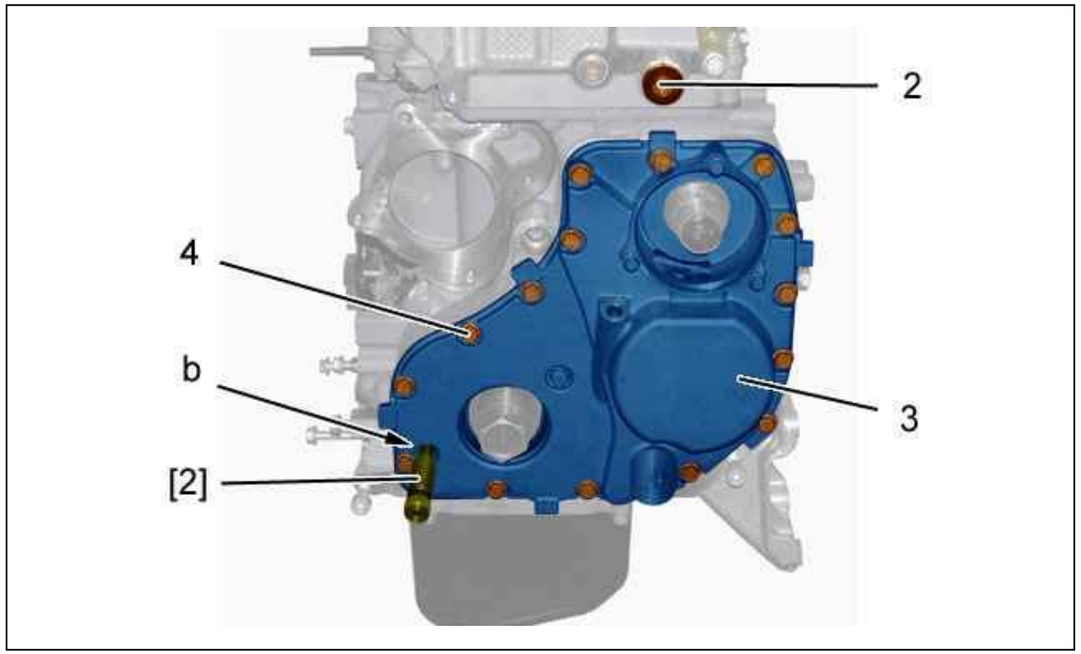

Figure : B1EM001D

Remove the plug (at "b").
Fit the tool [2] (at "b") : Check that the crankshaft setting rod engages freely in its location.

N.B. : Tool [2] should screw into the engine block.

Remove :

- The tool [2]
- The cap (2)
- The 16 bolts (4)
- The timing cover (3) and its seal

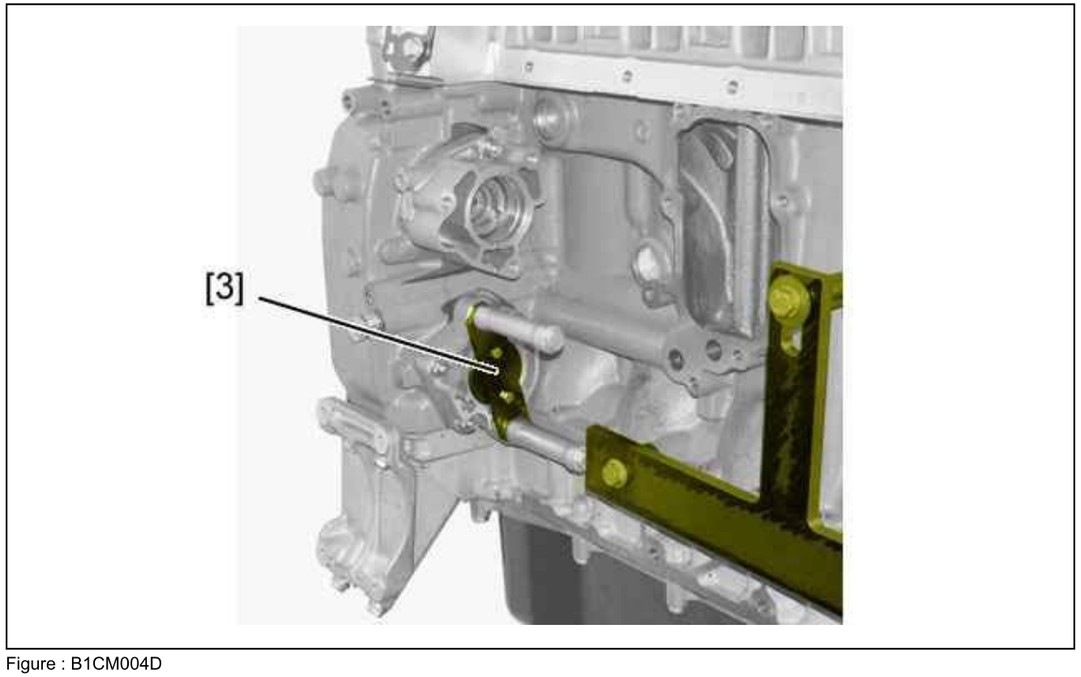

Figure : B1CM004D

Immobilise the sprocket of the power steering pump ; Using tool [3].

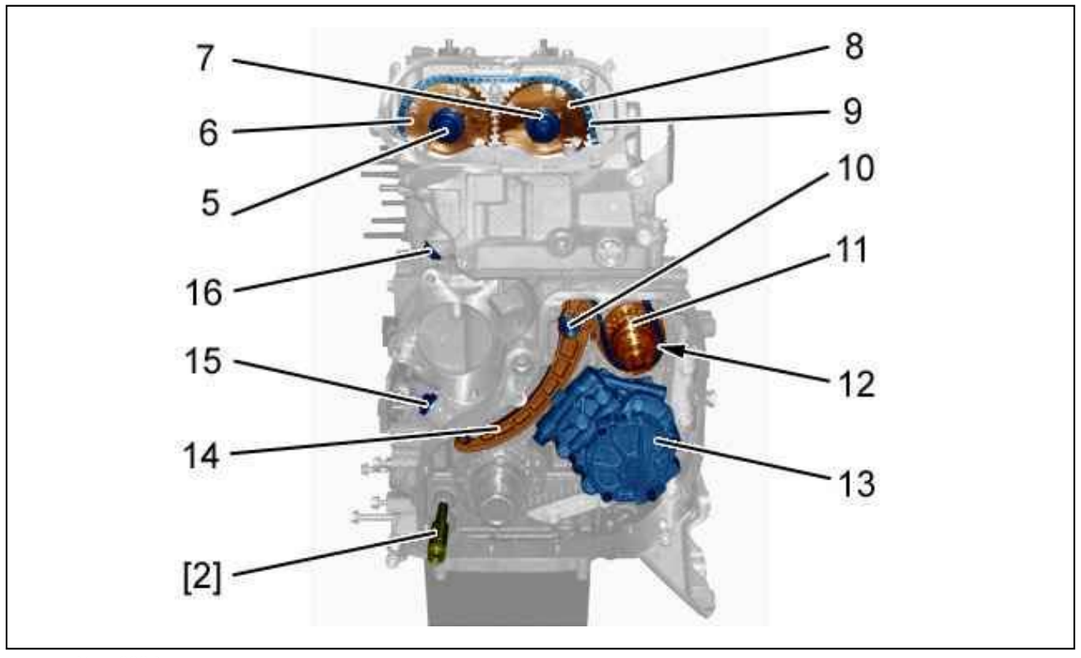

Figure : B1EM002D

Refit tool [2].

Loosen the bolt (12) immobilising the double sprocket (11).
Remove :

- The vacuum pump and oil pump module (13)
- The hydraulic tensioners (15), (16)
- The (10) bolt
- The chain pad (14)
- The (5) bolt
- The pinion (6)
- The (7) bolt
- The pinion (8)
- The chain (9)

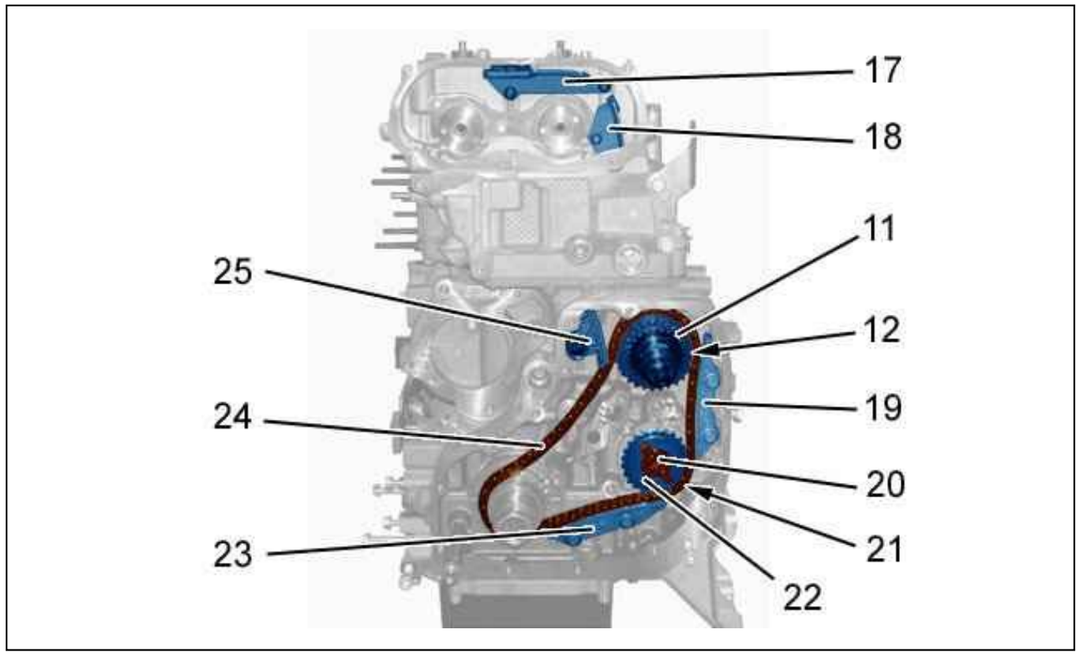

Figure : B1EM003D

Remove :

- The drive trunnion (20)
- The (21) bolt
- The pinion (22)
- The (12) bolt
- The double sprocket (11)
- The chain (24)
- The chain pads (17), (18), (19), (23), (25)

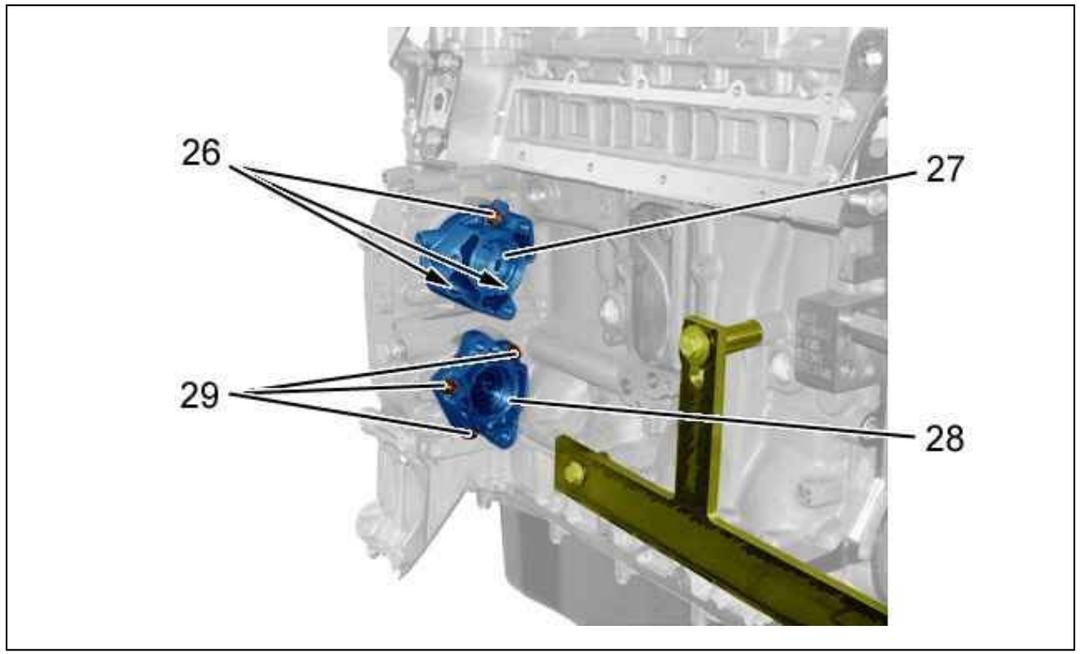

Figure : B1CM005D

Remove the tool [3].
Remove :

- The nuts (26)
- The support (27) and the seals
- The nuts (29)
- The support (28) and the seals

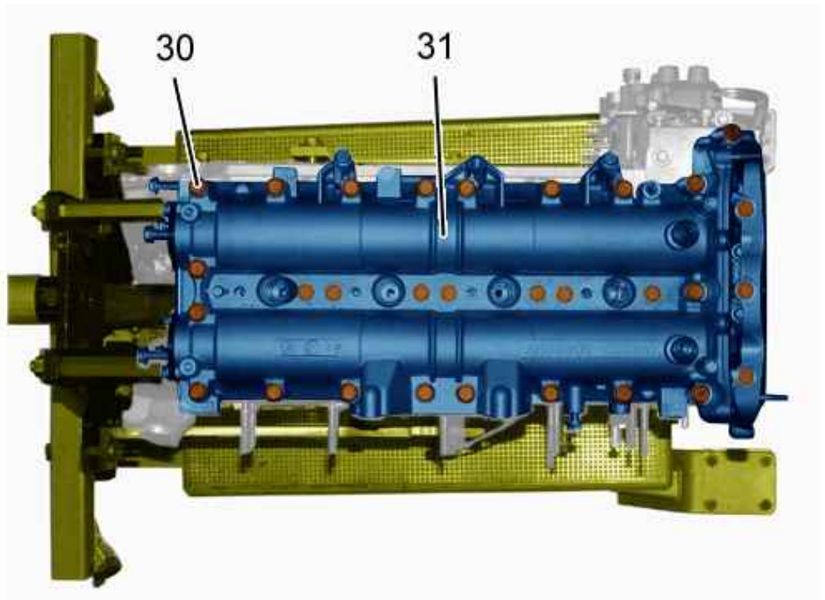

Figure : B1DM00AD

Remove :

- The 30 bolts (30)
- The cylinder head cover (31)

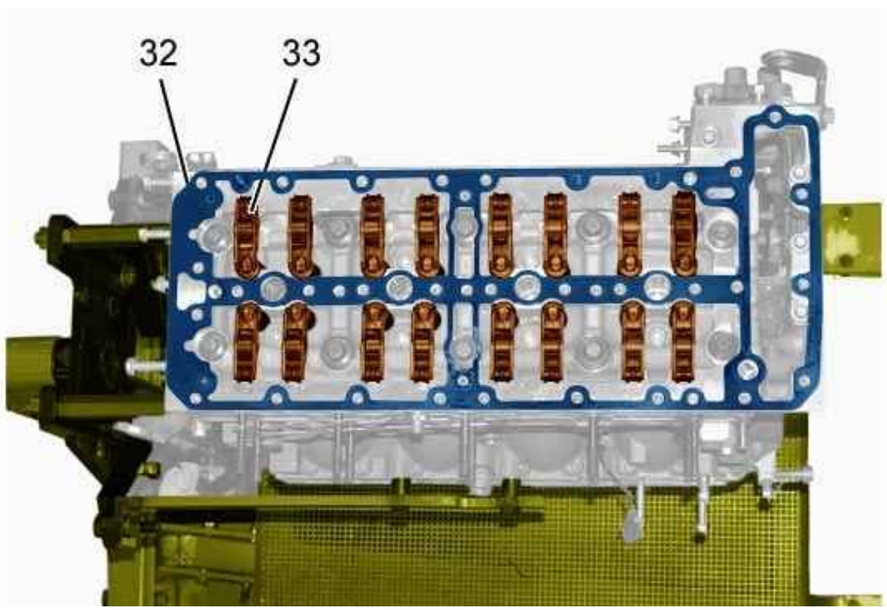

Figure : B1DM00BD

CAUTION : Mark the position of the roller valve rockers and hydraulic cam followers (33).

Remove :

- The seal (32)
- The hydraulic follower and roller rocker (33) assemblies

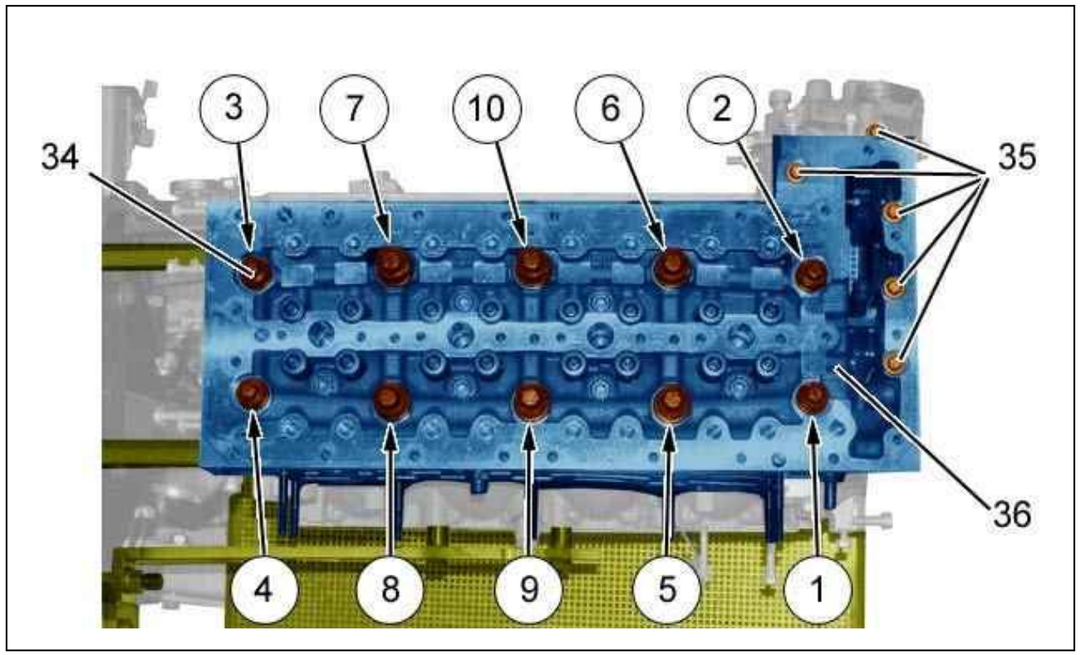

Figure : B1DM00CD

Remove :

- The bolts (35)
- The bolts (34) (order from 1 to 10)
- The cylinder head (36); Using tool [4] (if necessary)
- The cylinder head gasket

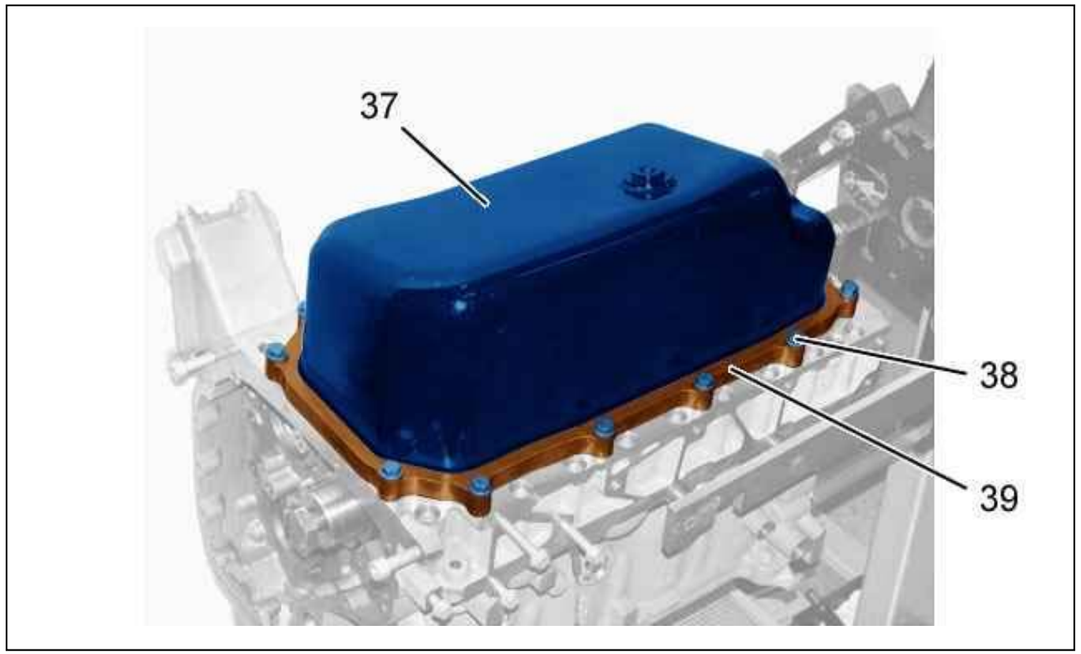

Figure : B1DM00DD

Remove :

- The 13 bolts (38)
- The spacer (39)
- The engine sump (37) and its seal

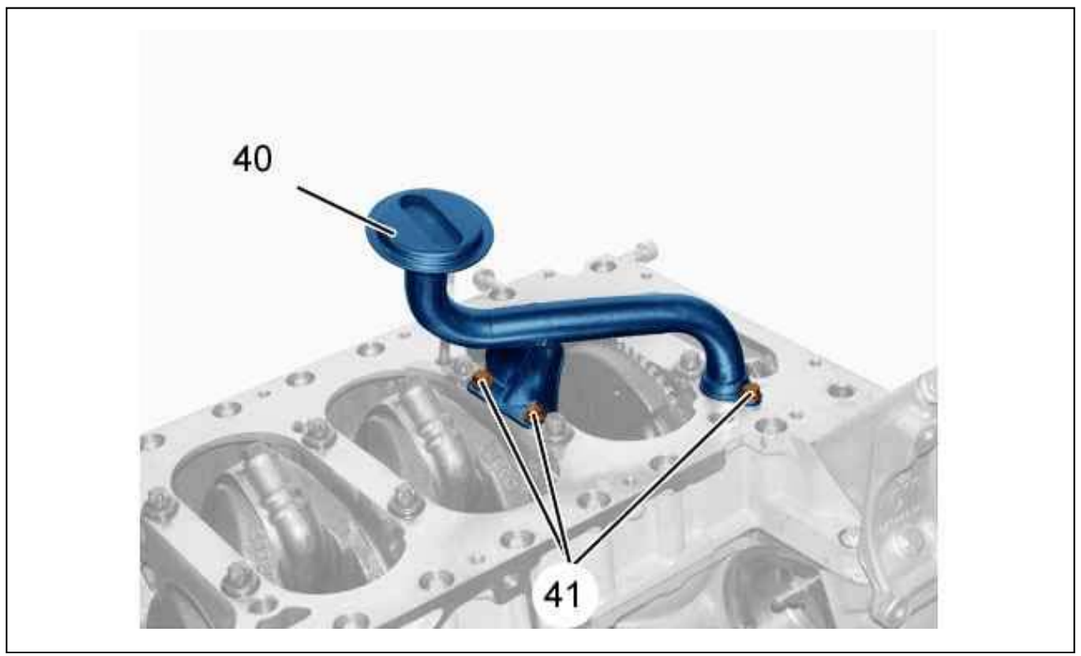

Figure : B1DM00ED

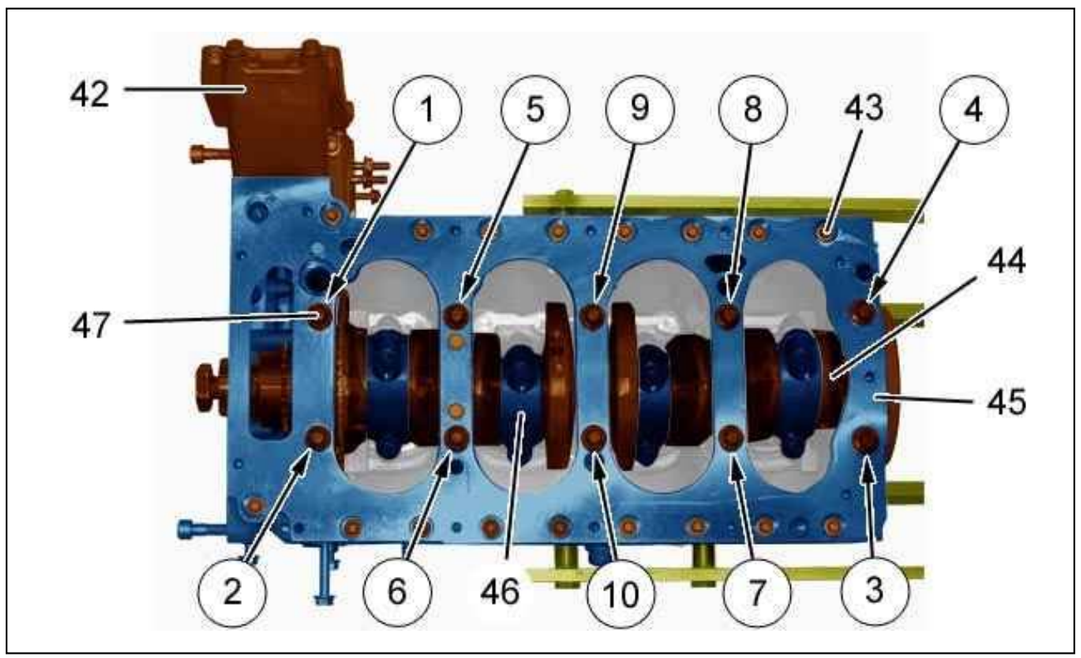

Remove :

- The bolts (41)
- The oil suction strainer (40) and its seal

Figure : B1DM00FD

CAUTION : Mark the location of the big end caps (46) and bearing shells .

Remove :

- The bracket (42)
- The big end caps (46) and their bearing shells
- The bolts (47) (from 1 to 10)
- The 19 bolts (43)
- The main bearing caps (45) fitted with lower bearing shells
- The crankshaft (44)

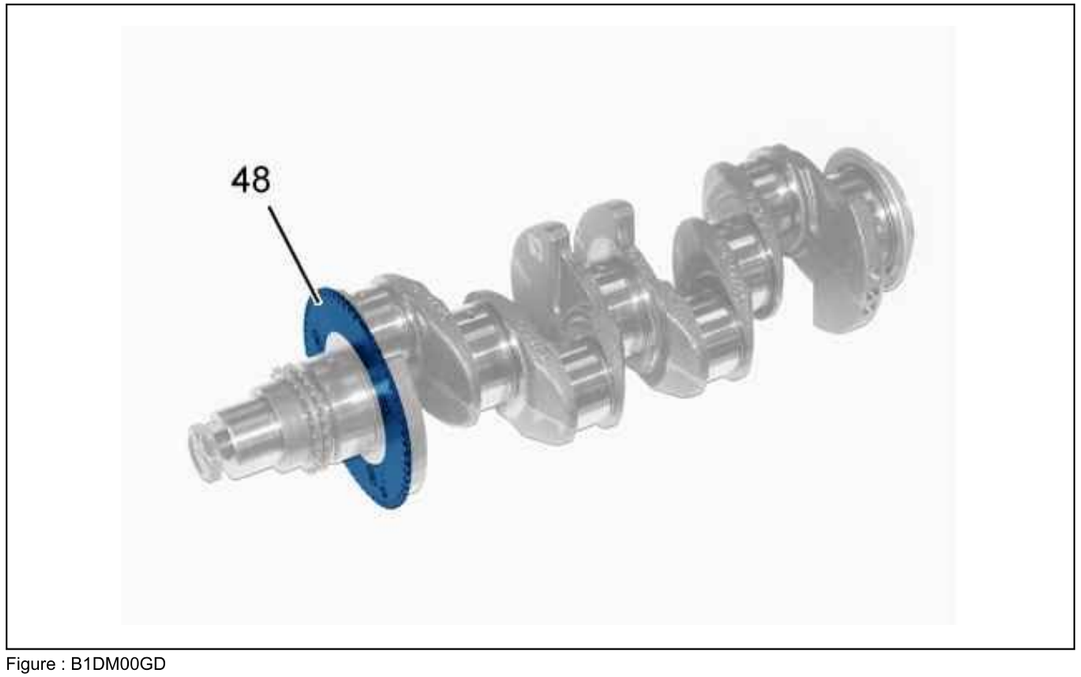

Figure : B1DM00GD

Remove the target (48).

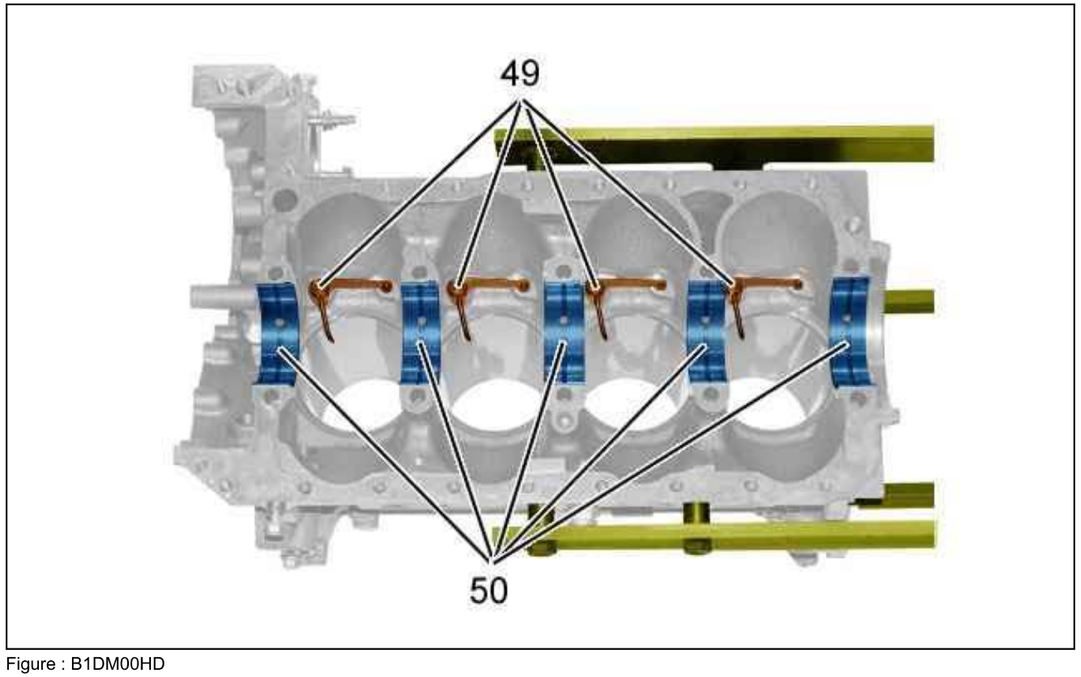

Figure : B1DM00HD

CAUTION : Mark the location of the piston-cap sets and the bearing shells (50).

Remove :

- The cap-piston sets
- The grooved bearing shells (50)
- The piston base jets (49)

N.B. : The central bearing shell is fitted with lateral blocks.

REFITTING : ENGINE

ESSENTIAL : Observe the safety and cleanliness recommendations.

1. Recommended tools

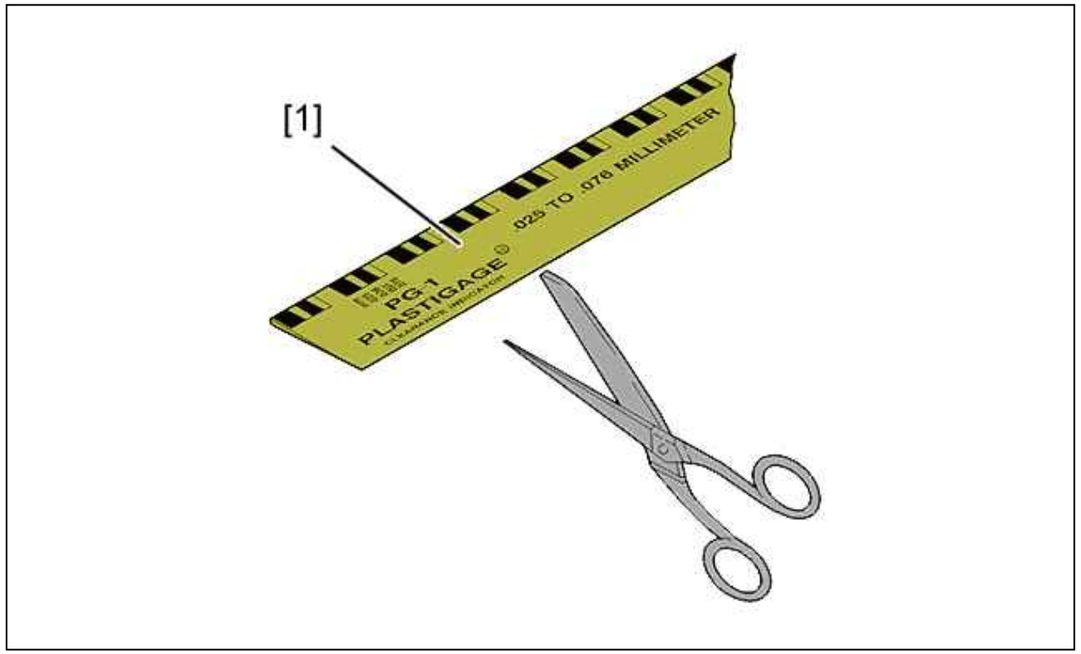

Figure : E5AM009D

Reference	Designation	Reference	Reference
[1]	Plastic gauge	4133-T	PLASTIGAGE PG1

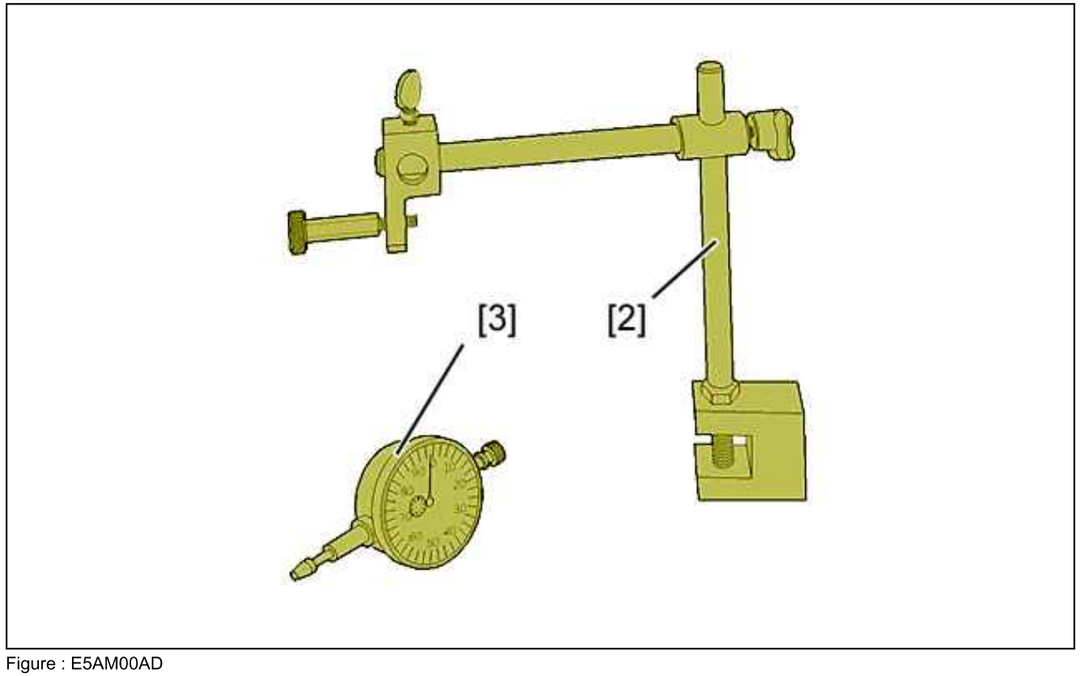

Figure : E5AM00AD

Reference	Designation	Reference	Reference
[2]	dial gauge support	5602-T	(-).0118-EZ/FZ
[3]	dial gauge	2437-T	(-).1504

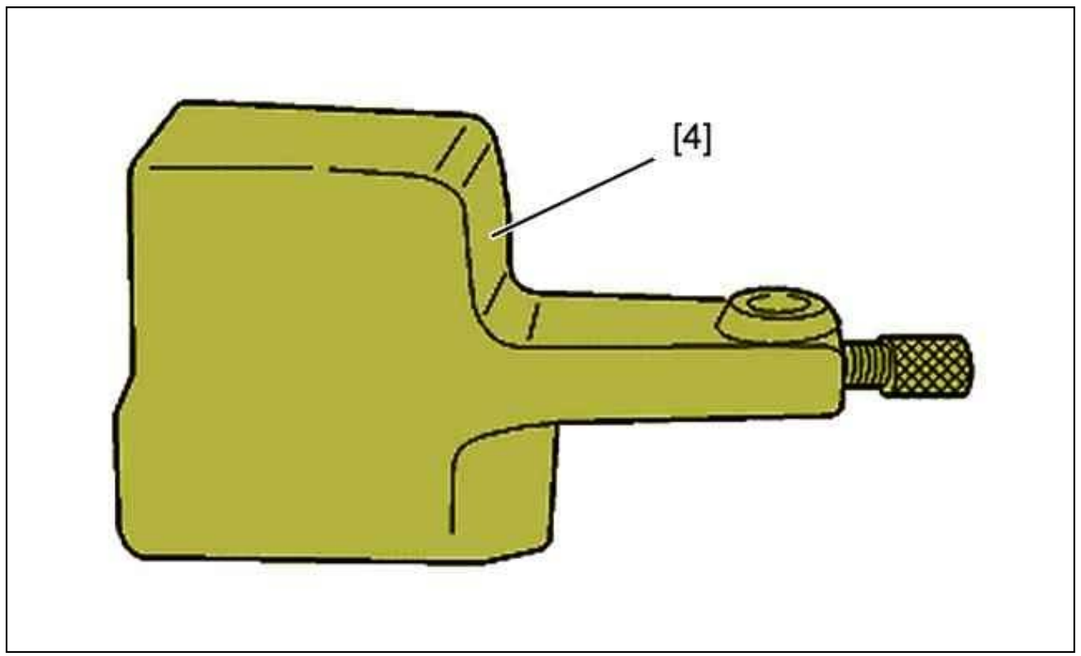

Figure : E5AP3TDD

Reference	Designation	Reference	Reference
[4]	dial gauge support	1754-T. Bis	(-).0110.H

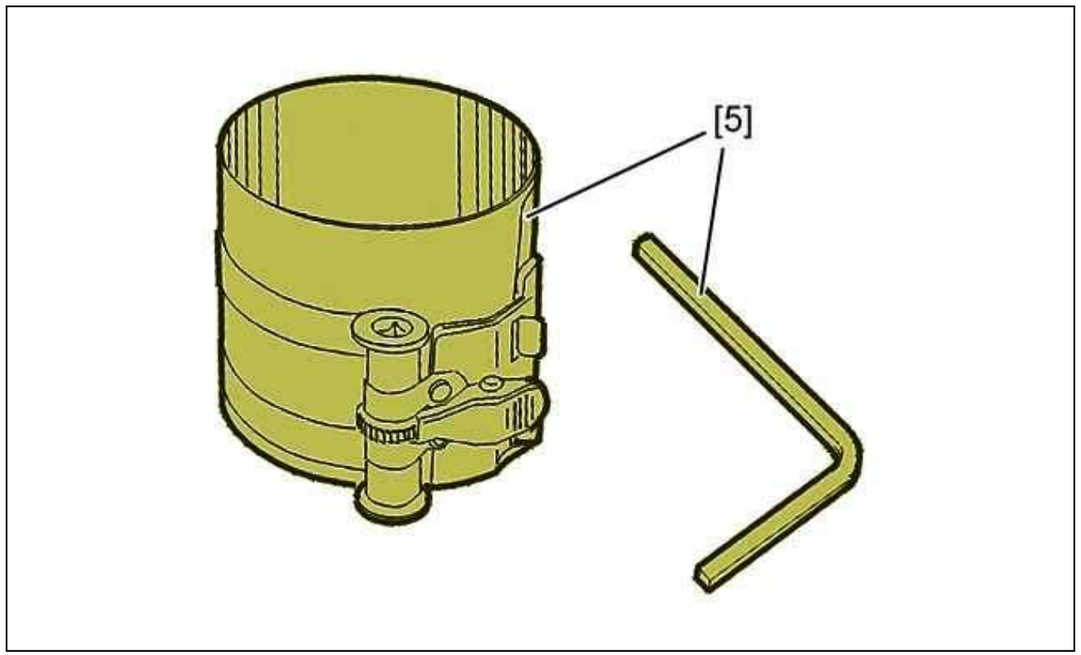

Figure : E5AP2V3D

Reference	Designation	Reference	Reference
[5]	Clip for fitting the piston rings on the engine	750-T	750-TB

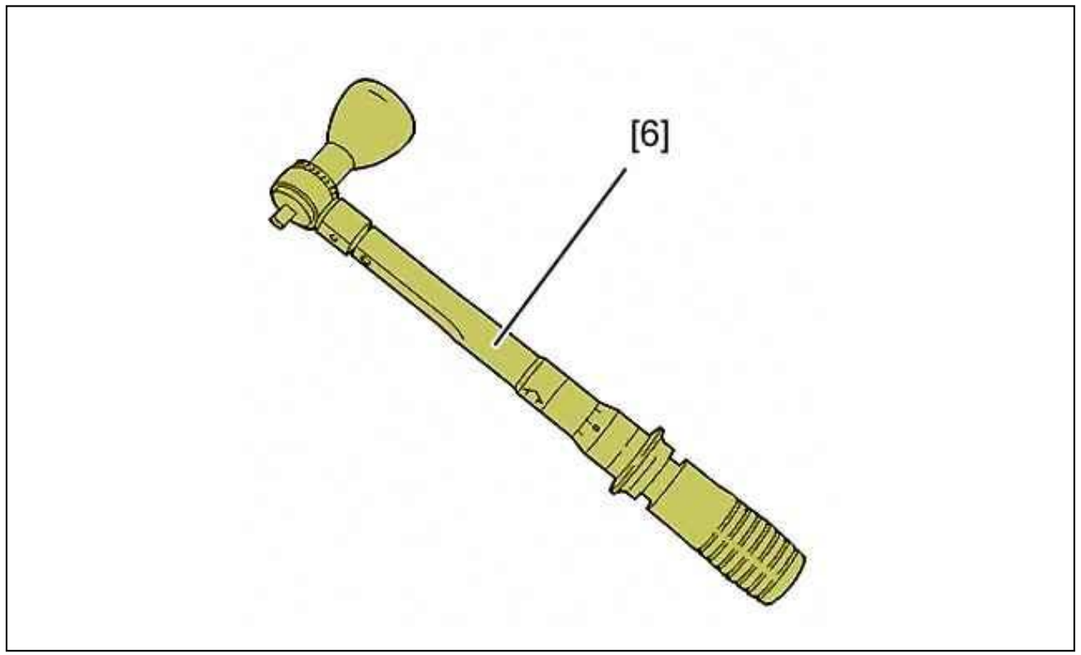

Figure : E5AM00BD

Reference	Designation	Reference	Reference
[6]	Torque wrench	4220-T.B	(-).1603-A/B/D

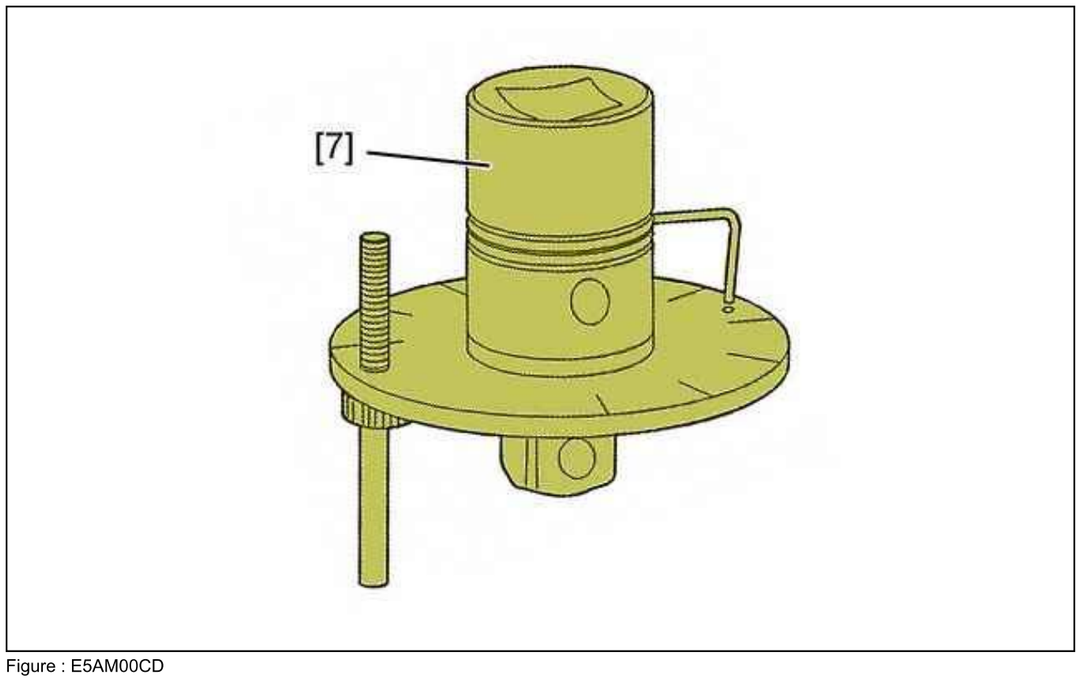

Figure : E5AM00CD

Reference	Designation	Reference	Reference
[7]	adaptor for angular tightening	4069-T	FACOM D360

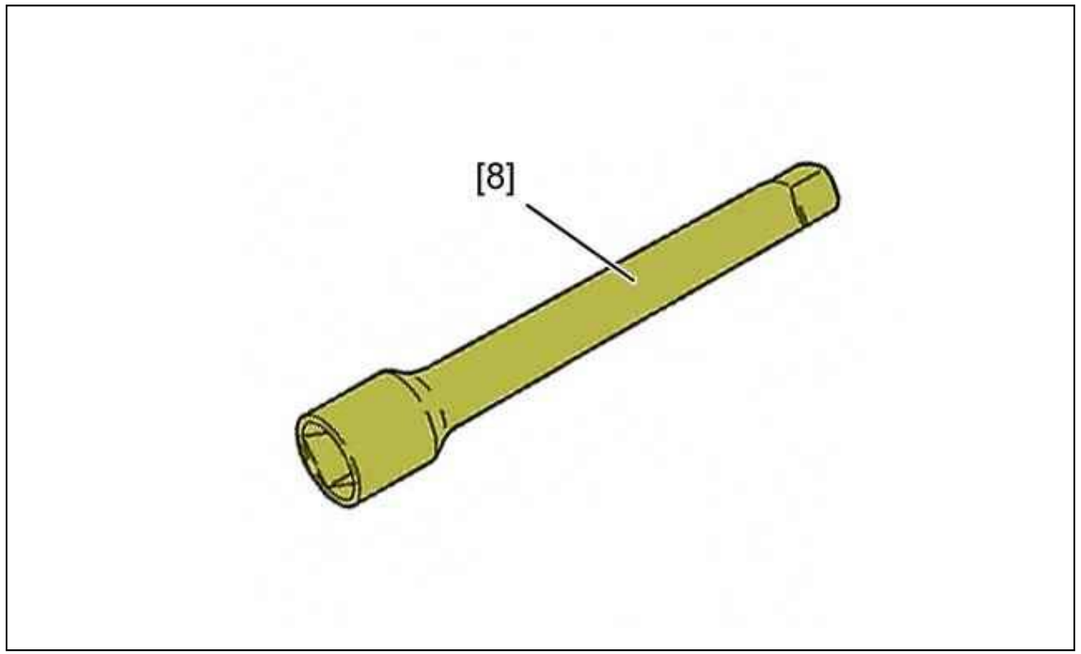

Figure : E5AM00DD

Reference	Designation	Reference	Reference
[8]	Extension	4220-T.J	(-).1609-E

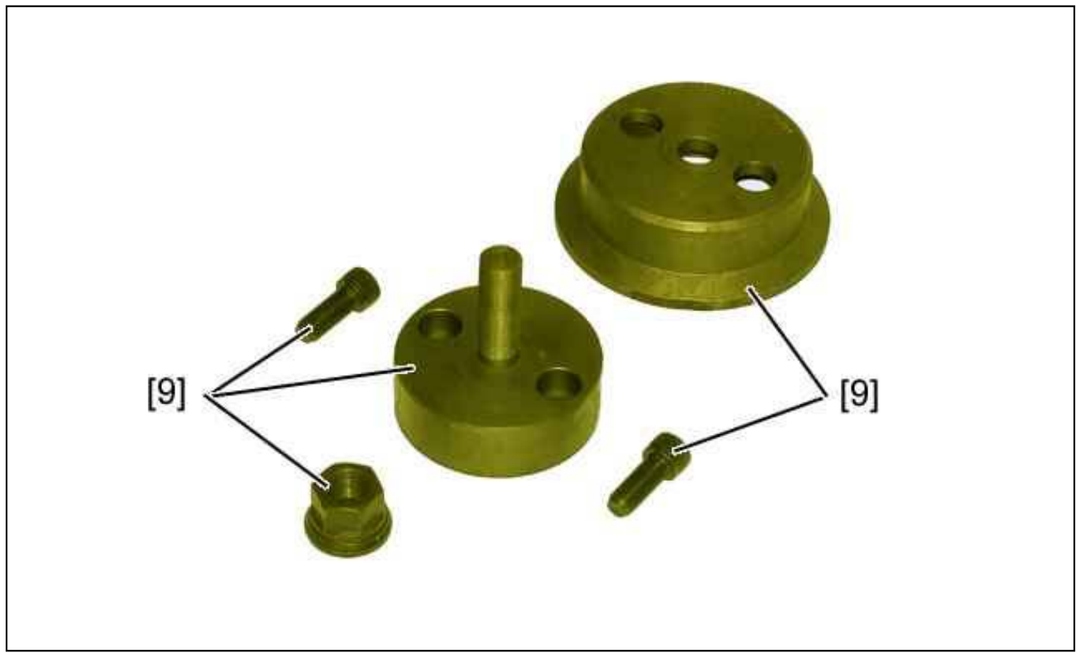

Figure : E5AM00ED

Reference	Designation	Reference
[9]	Tool for fitting the engine flywheel sealing ring	(-).0191/2.F

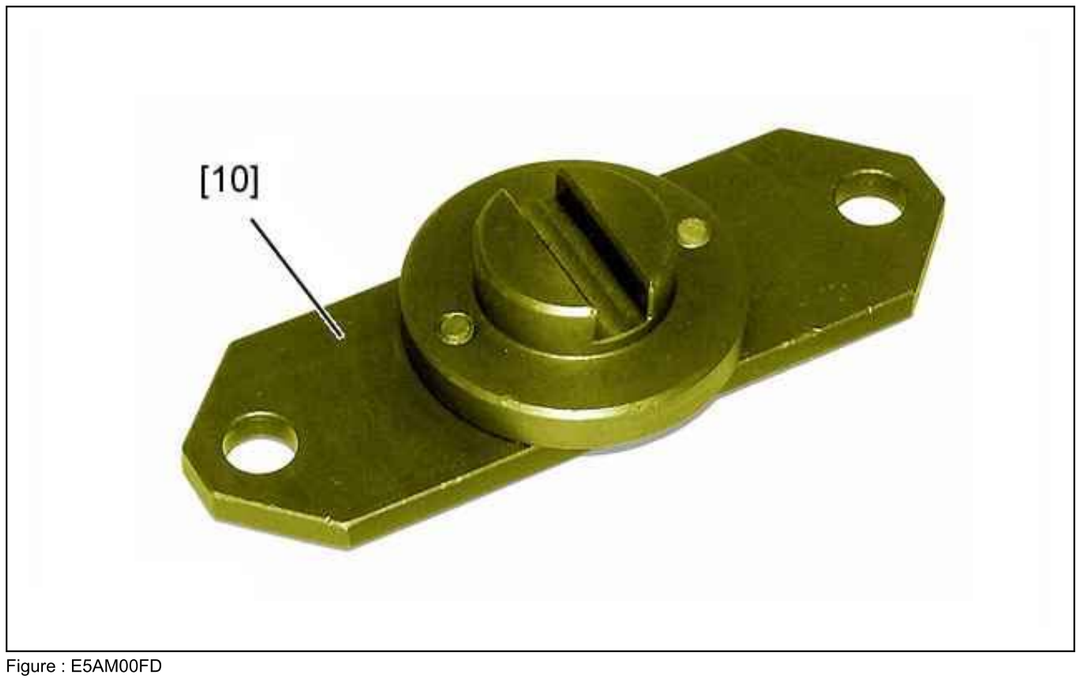

Figure : E5AM00FD

Reference	Designation	Reference
[10]	Tool for immobilising the drive shaft of the power steering pump	(-).0191/2 J

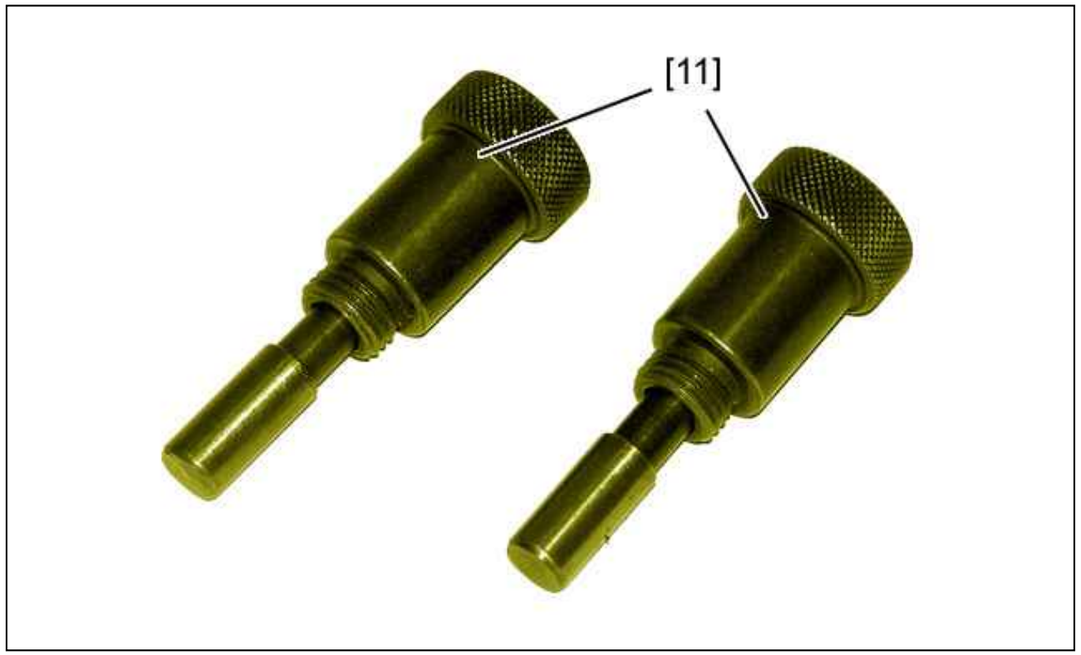

Figure : E5AM00GD

Reference	Designation	Reference
[11]	Camshaft immobilisation pins	(-).0191/2 B

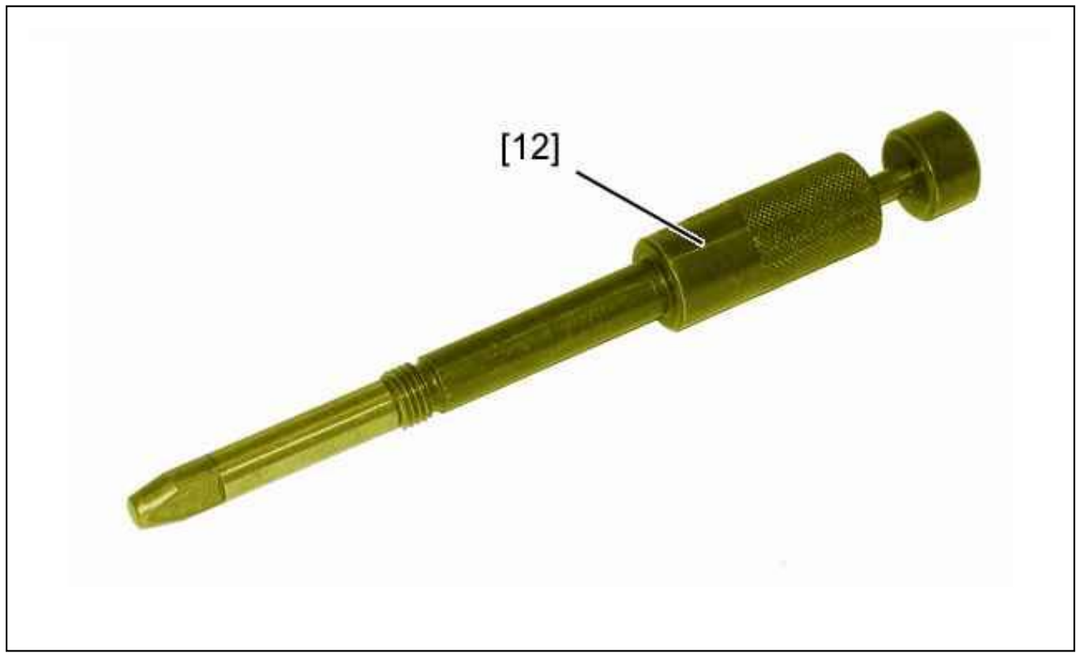

Figure : E5AM00HD

Reference	Designation	Reference
[12]	Crankshaft setting and immobilisation pin	(-).0191/2 A

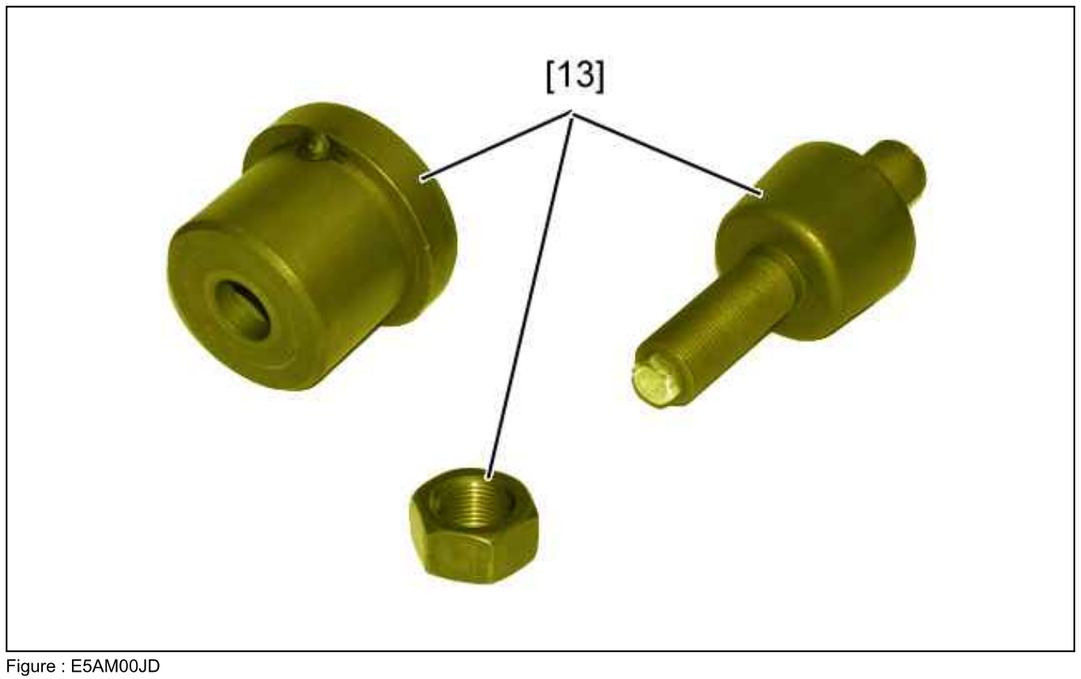

Figure : E5AM00JD

Reference	Designation	Reference
[13]	Tool for fitting the timing sealing ring	(-).0191/2.H

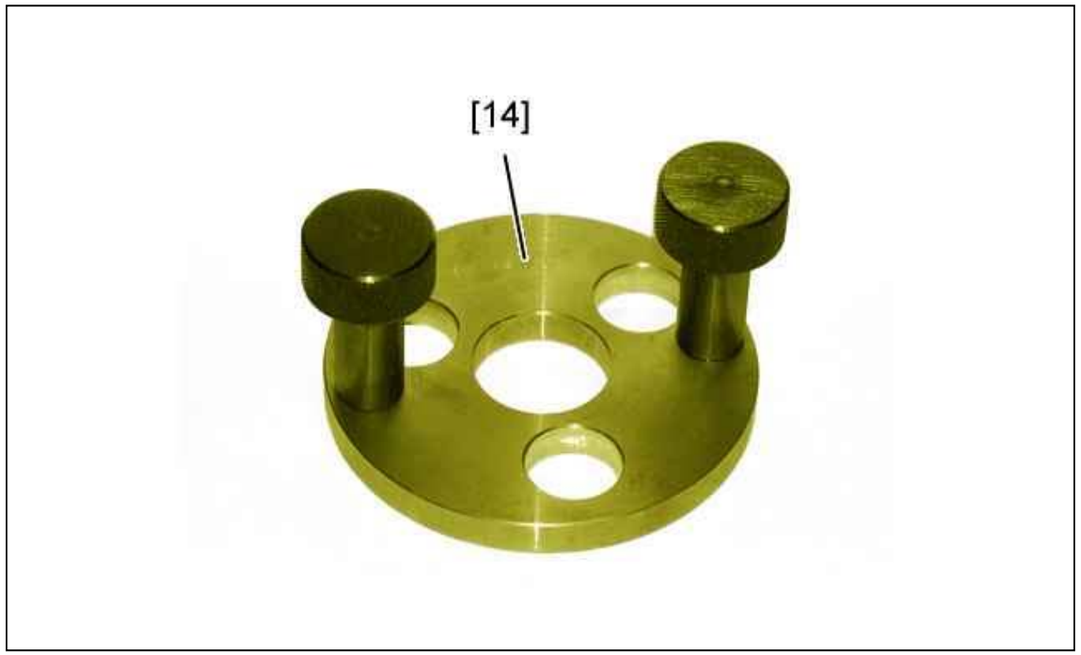

Figure : E5AM00KD

Reference	Designation	Reference
[14]	Timing cover centring pin	(-).0191/2.S

2. Check

CAUTION : Surface grinding of the engine block is prohibited if the piston protrusion exceeds the recommended value.

CAUTION : Grind all the main bearing and big end bearing journals to the same existing repair dimension (In the event of wear).

Check :

- The flatness of the contact plane of the cylinder block
- There are no traces of seizing or wear in the cylinders (Correct if necessary : Refer to the specification)
- The diameters of the main and big end bearing diameters

3. Refitting

CAUTION : When refitting, the following should always be renewed : The circlips ; The washers ; The seals ; The bolts with thread lock .

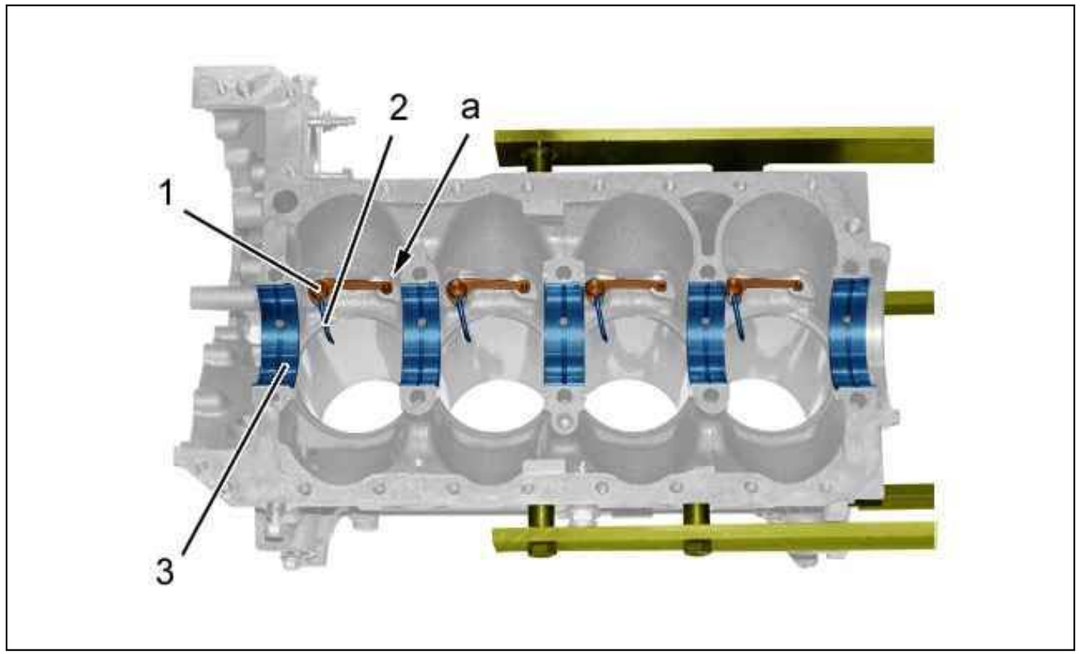

Figure : B1DM00JD

CAUTION : Half shells : Observe their original location (in the case of re-use).

CAUTION : Make sure that the lugs of the jets are correctly engaged in the cylinder block (at "a") (Before tightening).

Clean the bearing shells (3).
Refit :

- The 4 jets (2)
- The unions (1) ; Tighten to 2,5 ± 0,3 daN.m
- The upper bearing shells (3) (Grooved half shells)

N.B. : The central bearing shell is fitted with lateral blocks.

Refit the crankshaft.
Cut 5 pieces from the plastigage [1] to the widths of the bearing shells.

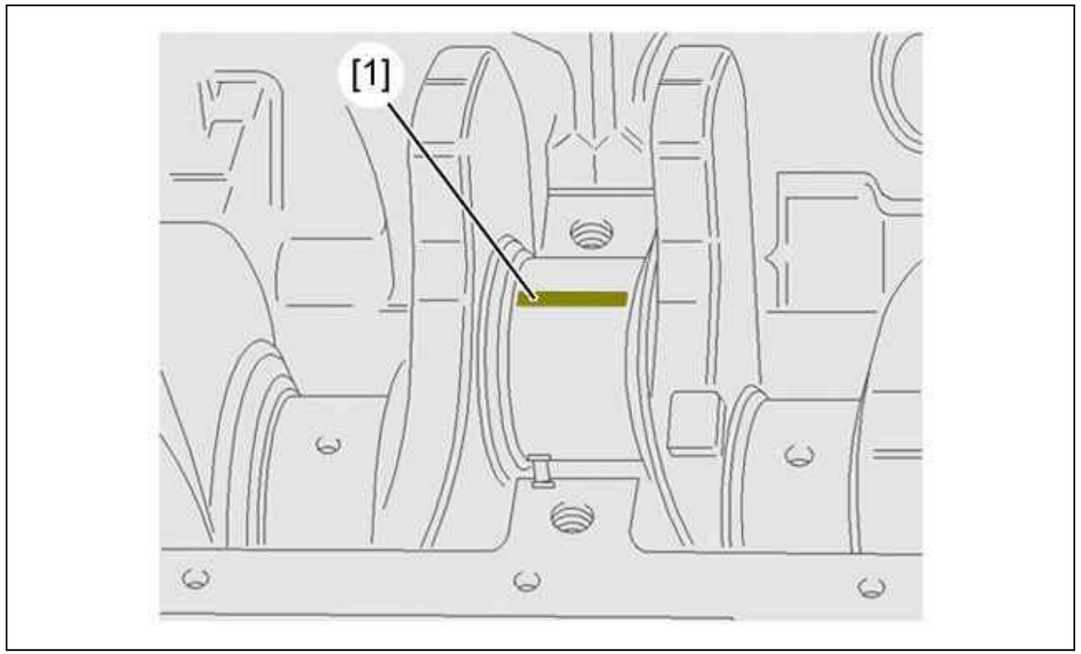

Figure : B1CM006D

CAUTION : During this operation, the crankshaft must not rotate.

Fit the plastic gauges [1] to each contact area of the crankshaft .
Refit :

- The crankshaft bearing cap housing fitted with the bearing shells
- The securing bolts (Use the original bolts)

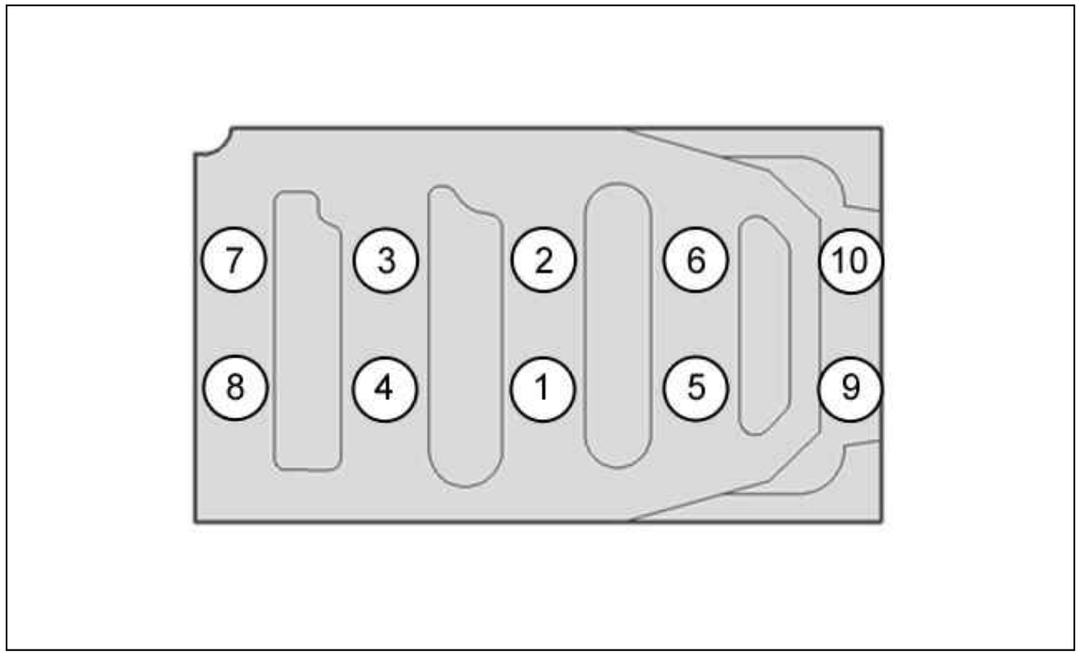

Figure : B1CM007D

Crankshaft bearing cap housing fixing screws : Tightening procedure ; Using the tools [6], [7], [8] (order from 1 to 10) :

- Pre-tighten to 5 ± 0,5 daN.m
- 1st angular tightening : 60 ± 5°
- 2nd angular tightening : 60 ± 5°

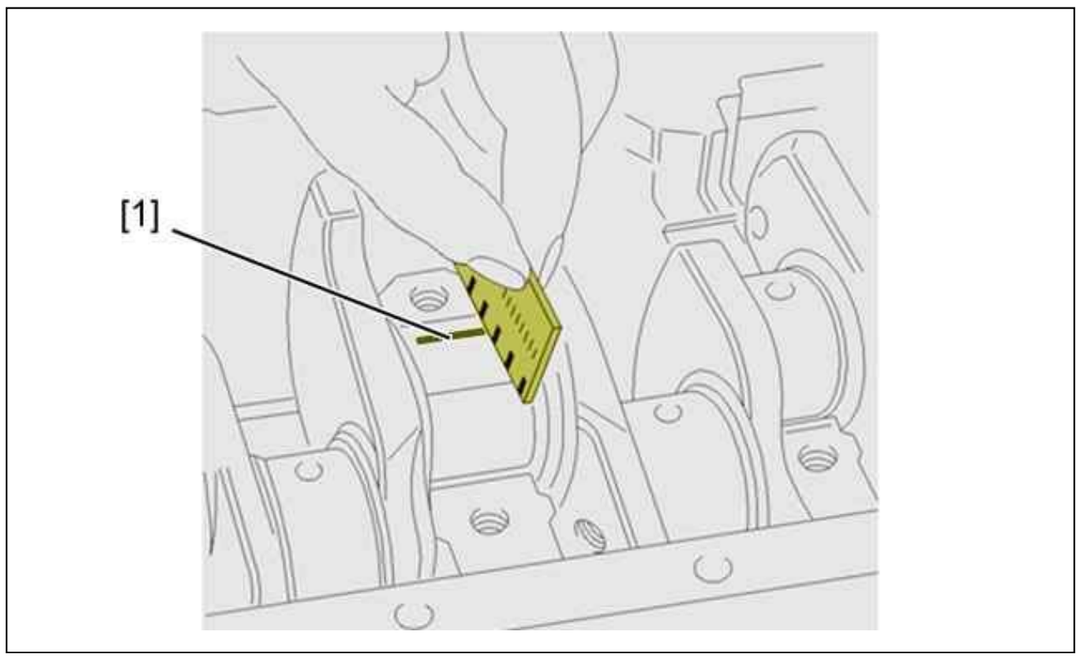

Figure : B1CM008D

Untighten the fixing bolts ; Perform in reverse order (from 10 to 1).
Remove the crankshaft bearing cap casing.
Compare the width (in mm) of the plastic gauges [1].
The value read indicates the running clearance.
The clearance should be between 0,032 and 0,102 mm.
Clean off the traces of the plastic gauges .
Select the category of bearing half-shells (Refer to the specification).

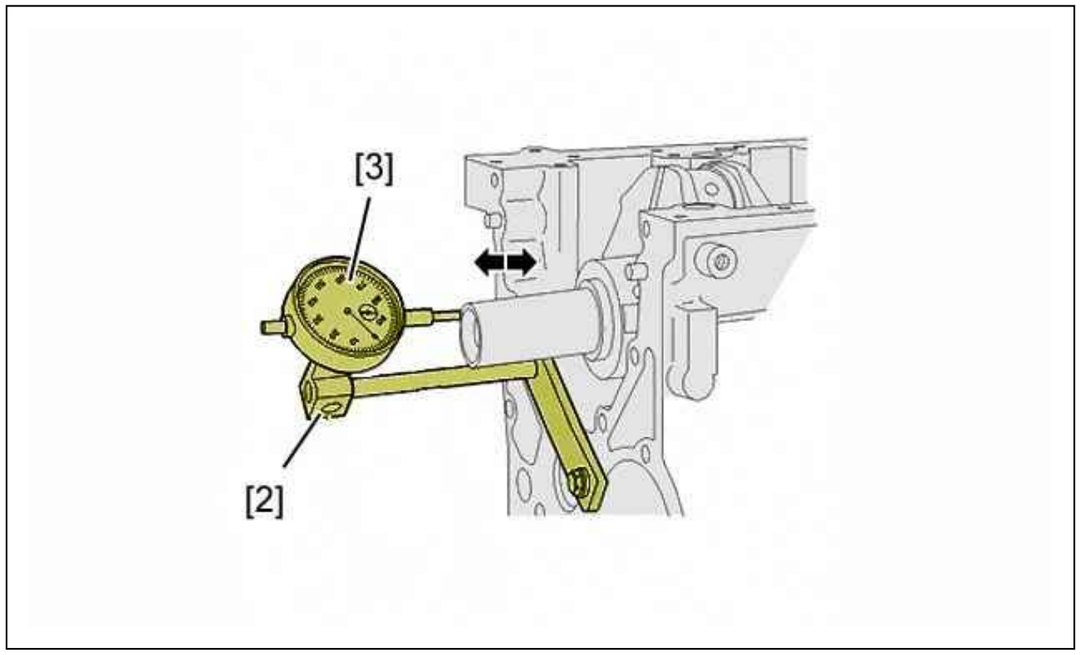

Figure : B1CM009D

Fit the tools [2], [3].
Press on the end of the crankshaft in the cylinder block.
Set the dial gauge to zero.
Press on the opposite end of the crankshaft in the cylinder block.
There should be a 0,060 to 0,310 mm endfloat.

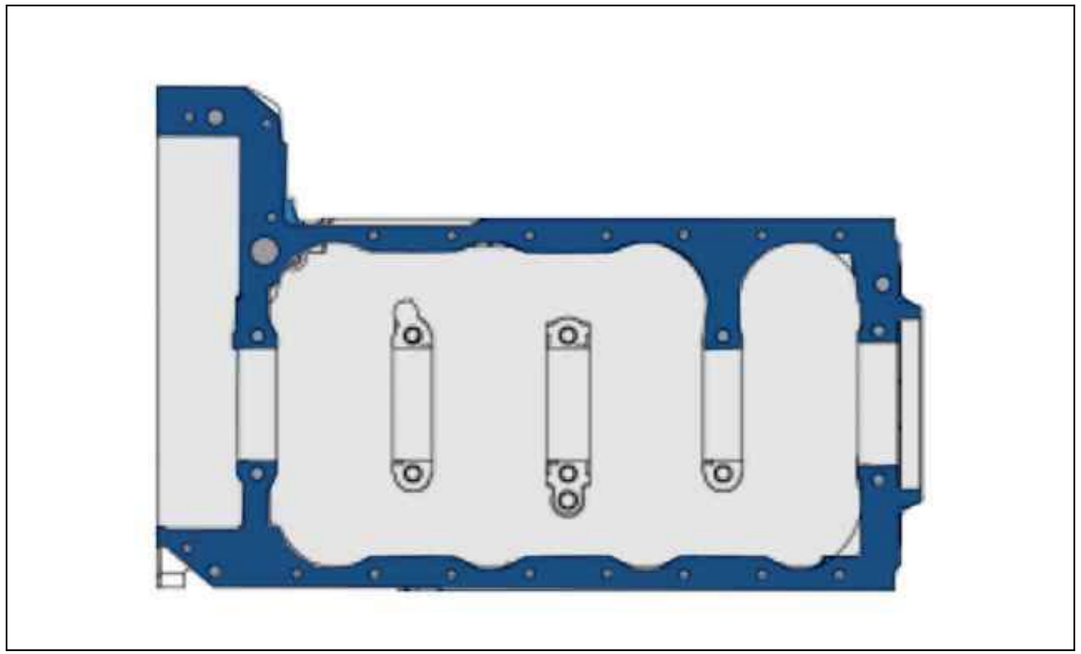

Figure : B1DM00KD

CAUTION : If re-used : Observe the original location of the half shells.

CAUTION : Refit the crankshaft bearing cap housing within 10 minutes of applying the mastic.

Clean the contact surfaces between the crankshaft bearing cap housing and the cylinder block .
Application of a sealing mastic : LOCTITE 510.

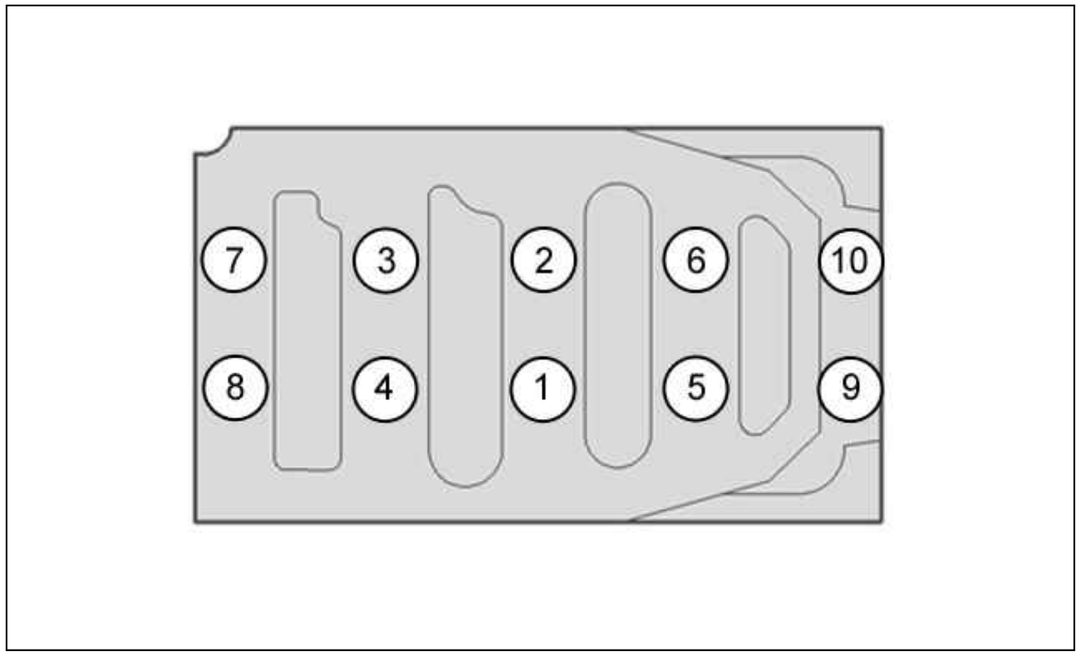

Figure : B1CM007D

Refit :

- The crankshaft bearing caps casing
- The half bearing shells

Fit the mounting screws (new).
Tightening procedure ; Using the tools [6], [7], [8] (order from 1 to 10) :

- Tighten the bolts to 5 ± 0,5 daN.m
- 1st angular tightening : 60 ± 5°
- 2nd angular tightening : 60 ± 5°

Crankshaft main bearing cap casing : Tighten the bolts to 2,6 ± 0,3 daN.m.

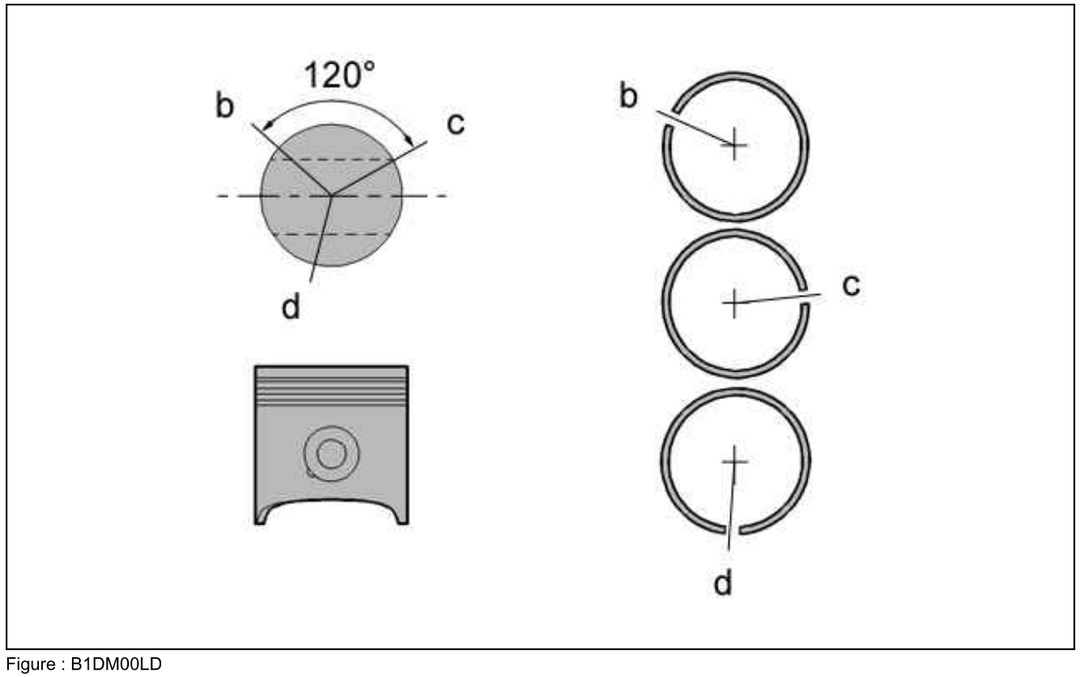

Figure : B1DM00LD

Check that the piston ring gaps "b", "c", "d" are facing in the right direction.

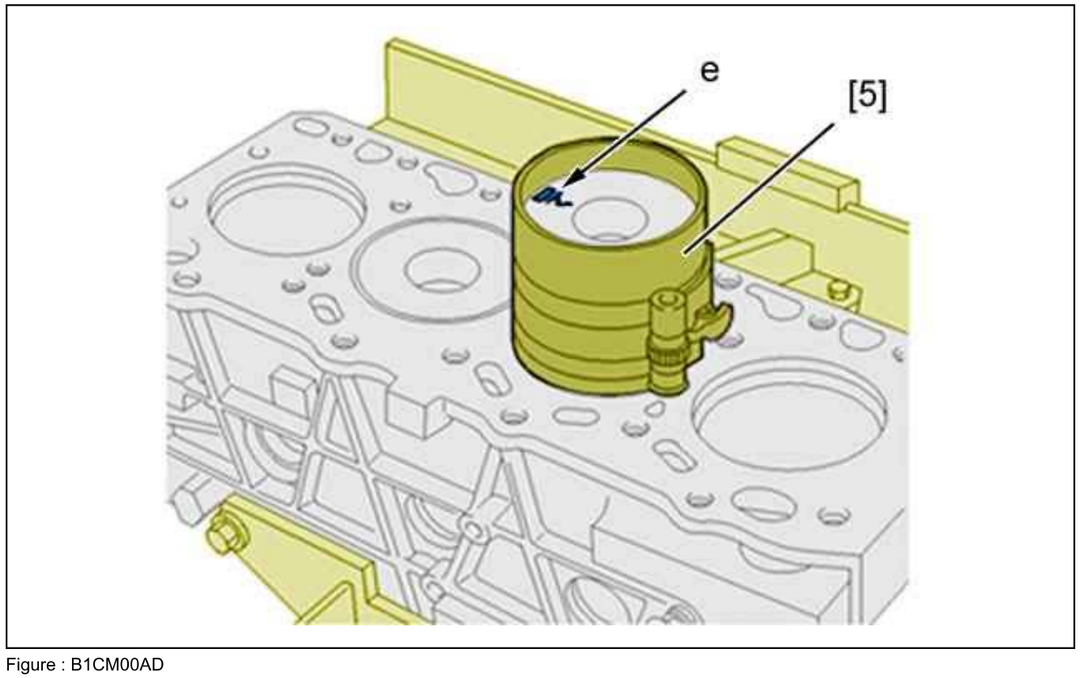

Figure : B1CM00AD

CAUTION : Position the marking of the piston on the engine flywheel side (at "e").

CAUTION : If re-used : Observe the original location of the pistons.

Oil :

- The pistons
- The linings
- The conrod bearing shells

Refit the connecting rod/piston assemblies ; Using tool [5].
Cut 4 pieces from the plastigage [1] to the widths of the bearing shells.

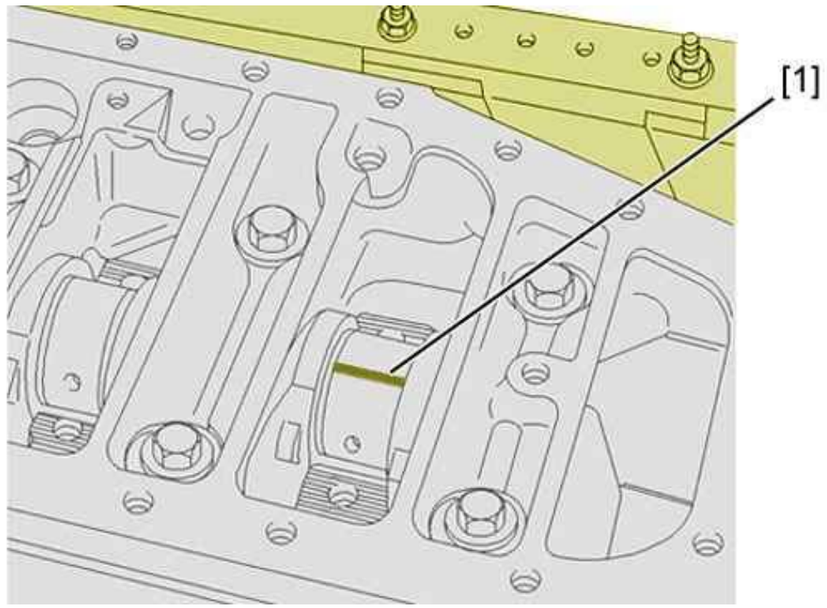

Figure : B1CM00BD

CAUTION : During this operation, the crankshaft must not rotate.

CAUTION : Observe pairing of the conrods/big end caps.

Fit the plastigage threads [1] on each of the crankshaft journals.
Refit the conrod caps .
Refit the conrod cap screws (Use the old screws).
Tightening procedure ; Using the tools [6], [7], [8] :

- Tightening to 5 ± 0,5 daN.m
- Angular tighten to 70 ± 5 °

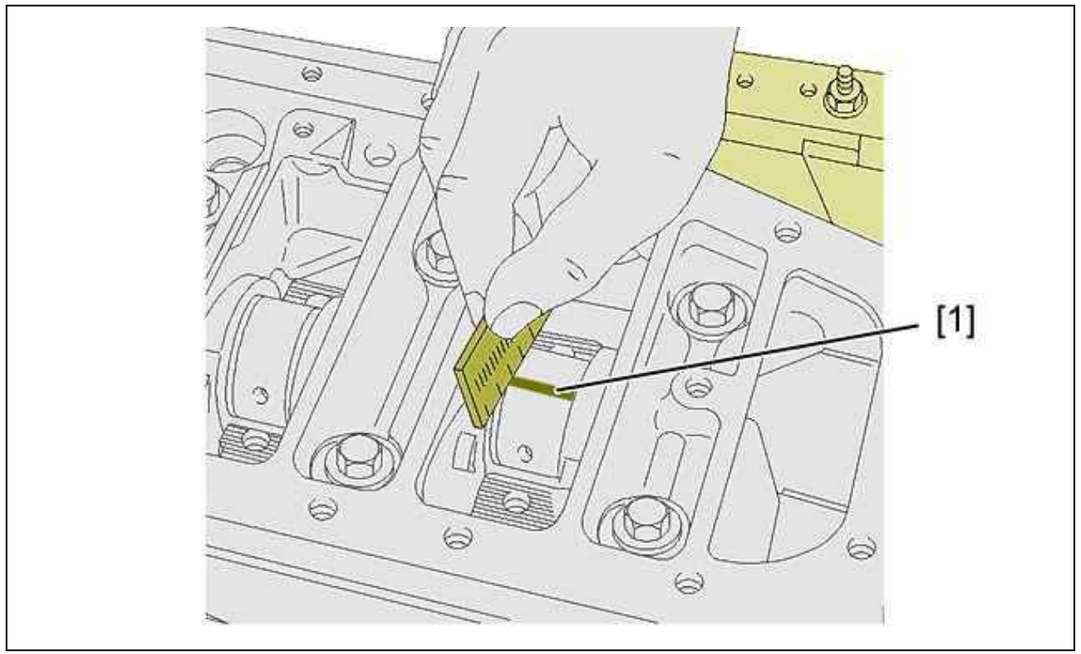

Figure : B1CM00CD

Remove :

- The connecting rod cap screws
- The big end caps

Compare the width (in mm) of the plastic gauges [1].
The value read indicates the running clearance.
The clearance should be between 0,035 and 0,083 mm.
Refit the conrod caps .
Fit the bolts (new).
Tightening procedure ; Using the tools [6], [7], [8] :

- Tightening to 5 ± 0,5 daN.m
- Angular tighten to 70 ± 5 °

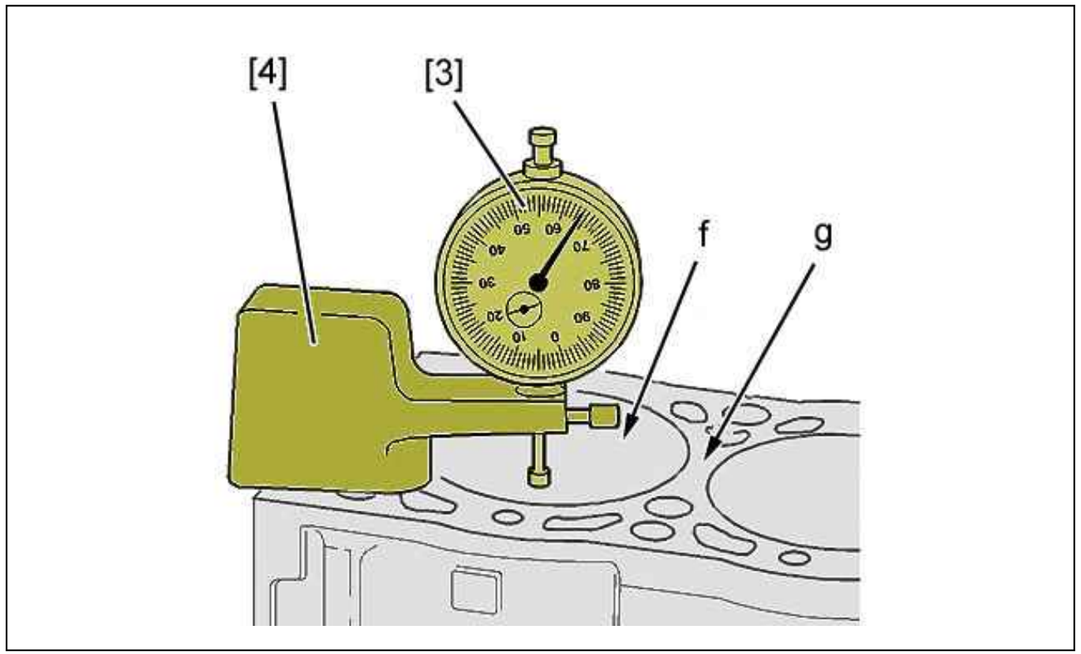

Figure : B1BM006D

Fit the tools [3], [4] on the cylinder block .
Set the dial gauge [3] to 0 (at "g").
Measure the piston protrusion (at "f").
Use the highest piston as a reference.
The value must be between 0,3 and 0,6 mm.

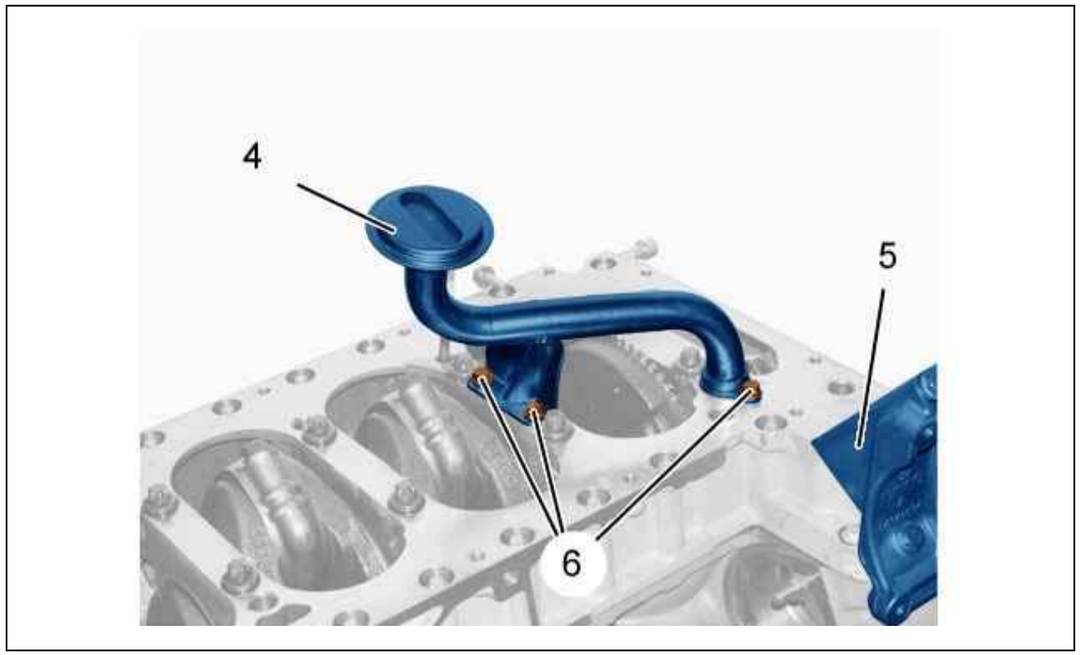

Figure : B1DM00MD

Refit :

- The bracket [5]
- The oil suction strainer (4) and its seal (new) (Lubricate the seal)
- The bolts (6) ; Tighten to 1,0 ± 0,1 daN.m

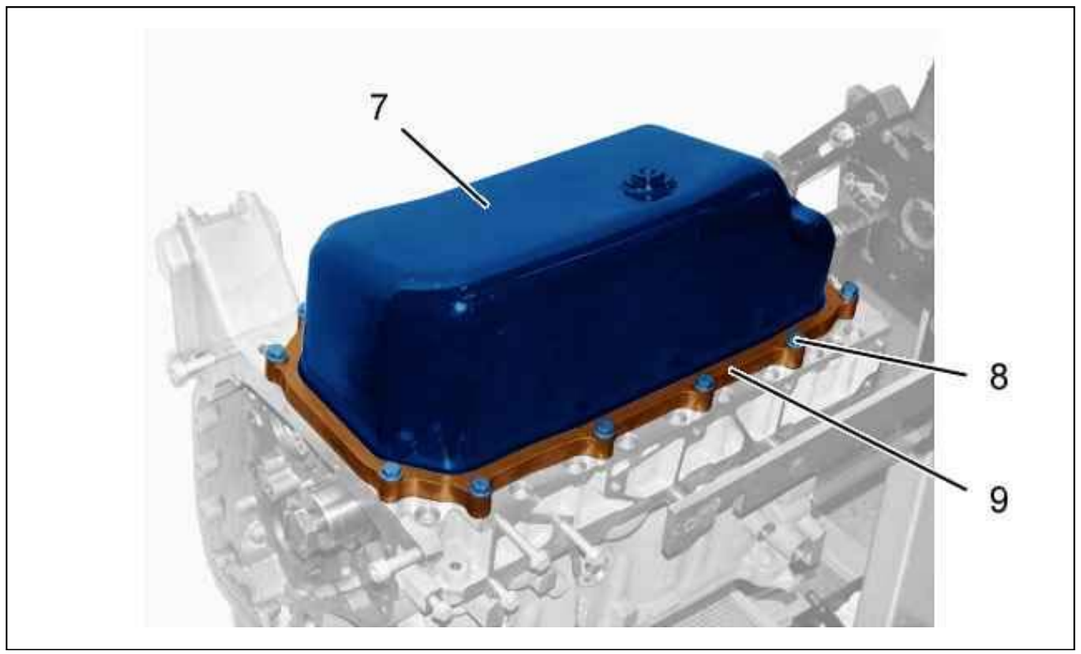

Figure : B1DM00ND

CAUTION : Check the position of the oil sump seal.

Fit :

- The cover (7) and its seal (new)
- The spacer (9)
- The 13 bolts (8) ; Tighten to 2,5 ± 0,3 daN.m

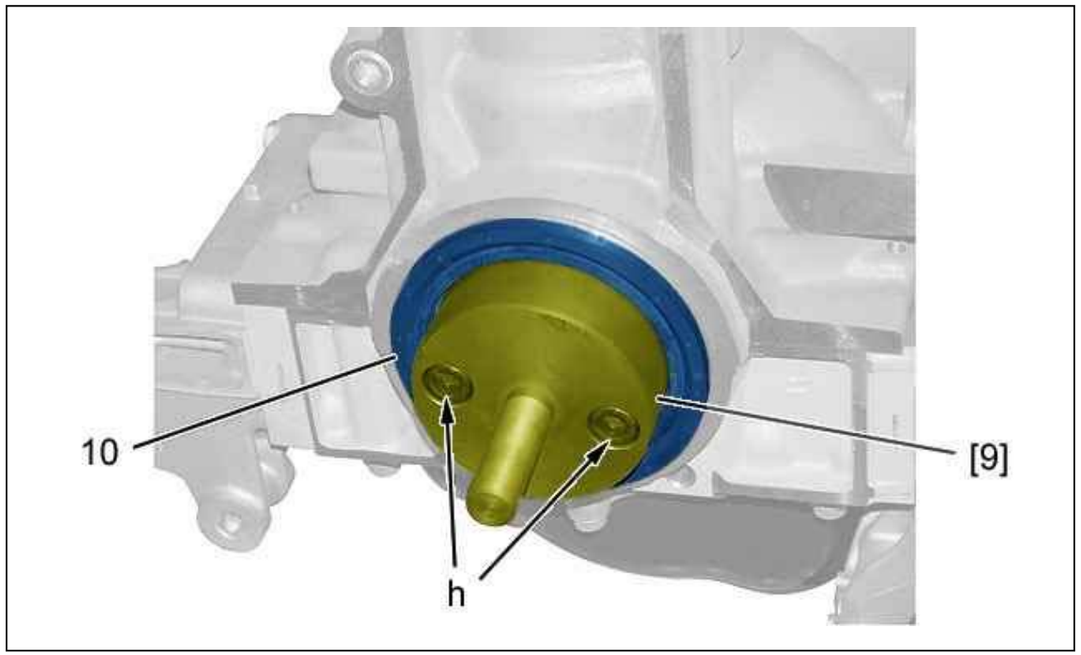

Figure : B1BM007D

Position the centring cone of the tool [9] on the crankshaft ; Using the bolts (at "h").
Place the sealing ring (10) on the centring cone of the tool [9].

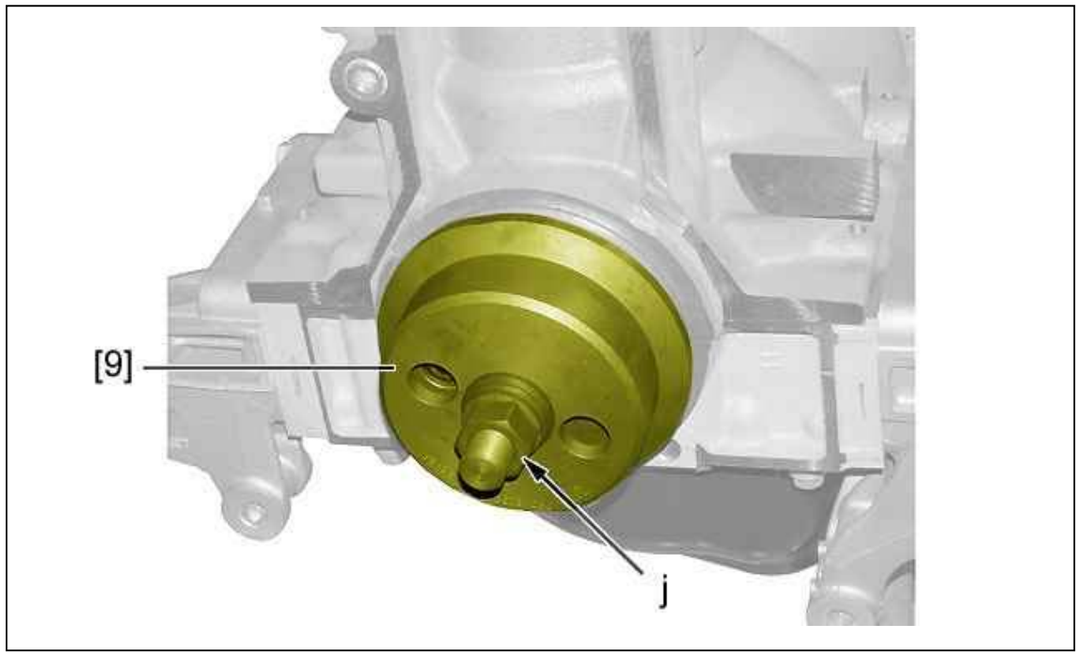

Figure : B1BM008D

Position the cap of the tool [9] on the centring cone of the tool [9].
Tighten the nut in the tool [9] (at "j").
Stop the tightening of the nut when the cap of the tool [9] is at the limit on the cylinder block .
Remove the tool [9].

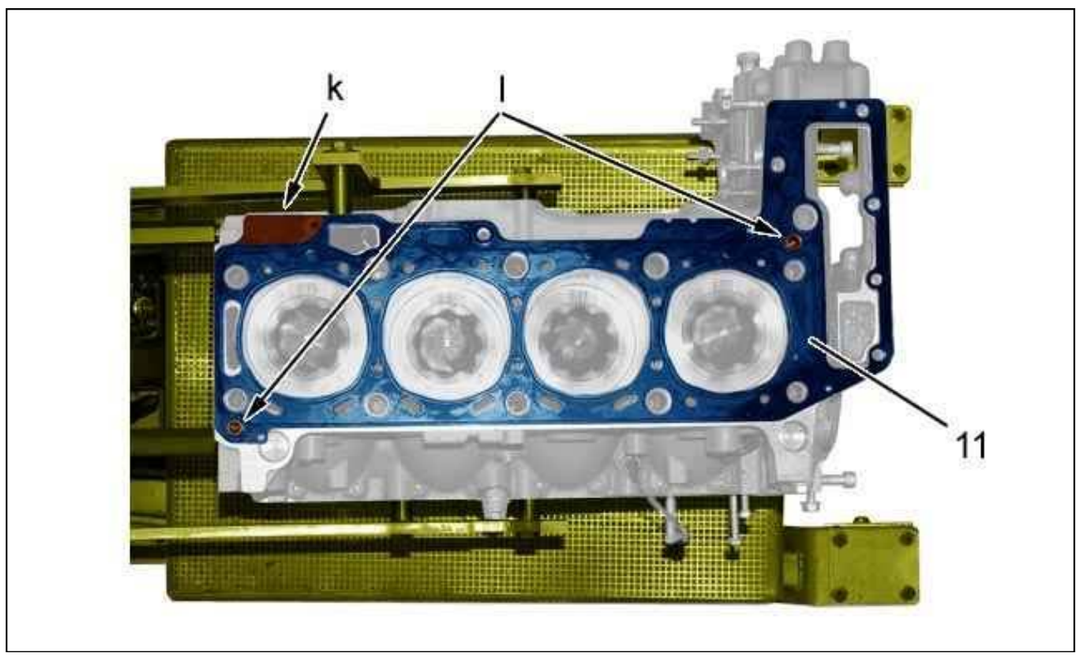

Figure : B1DM00PD

Check the presence of the centring pins (at "l").

CAUTION : Position the cylinder head gasket with the reference ALTO (towards the top) (at "k").

Fit a new cylinder head gasket (11) on the cylinder block.

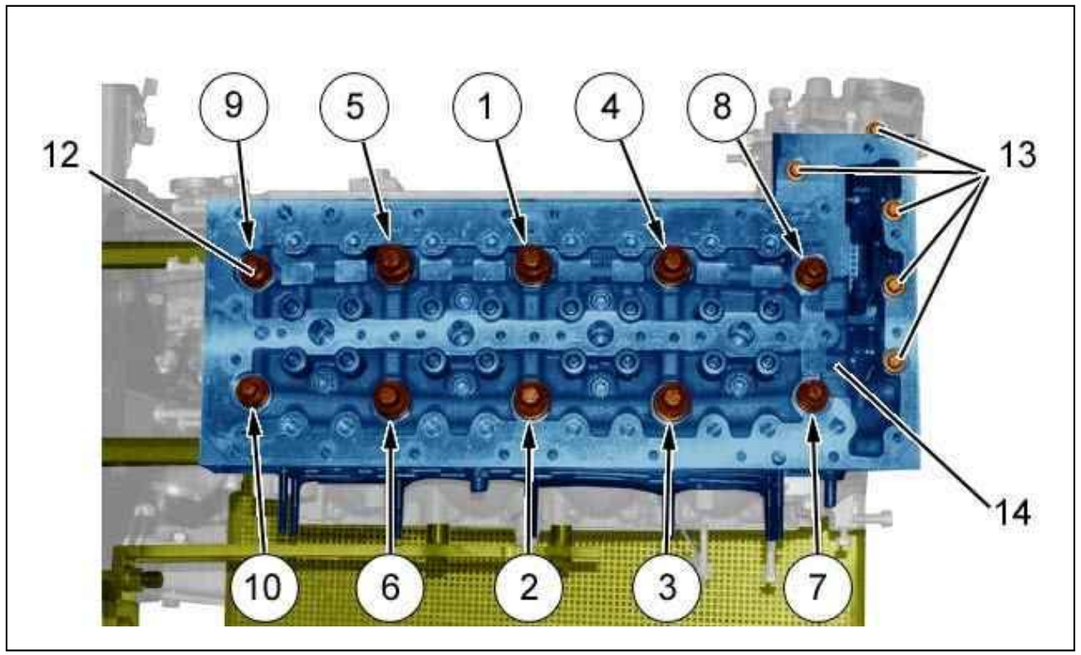

Figure : B1DM00QD

Refit the cylinder head (14).
Fit the bolts (12) (new screws).
Tightening method for the screws (12) ; Using the tools [6], [7], [8] (order from 1 to 10) :

- Pre-tighten to 13 ± 1 daNm (1 to 6)
- Pre-tighten to 6,5 ± 0,6 daNm (7 to 10)
- 1st angular tighten to 90 ± 1° (1 to 10)
- 2nd : Angular tighten to 90 ± 1 ° (1 to 6)
- 2nd : Angular tighten to 60 ± 1 ° (7 to 10)

Refit the bolts (13) ; Tighten to 2,5 ± 0,3 daN.m.

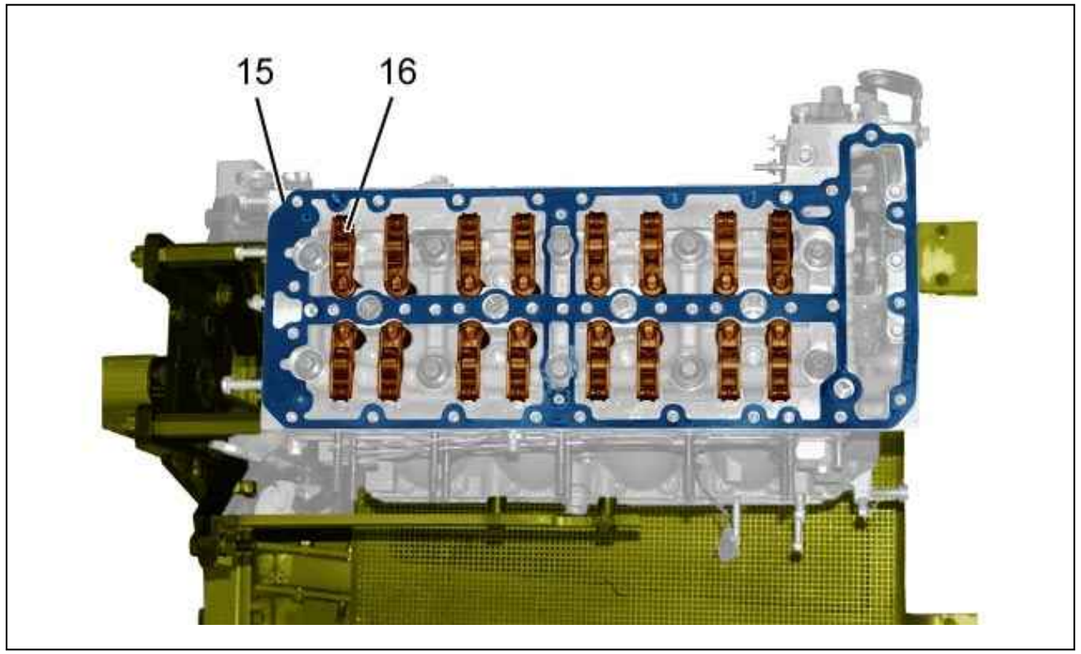

Figure : B1DM00RD

CAUTION : Mark the position of the roller valve rockers and hydraulic cam followers (16) (in the case of re-use).

Fit :

- The hydraulic follower and roller rocker (16) assemblies
- The upper seal (15) (new seal)

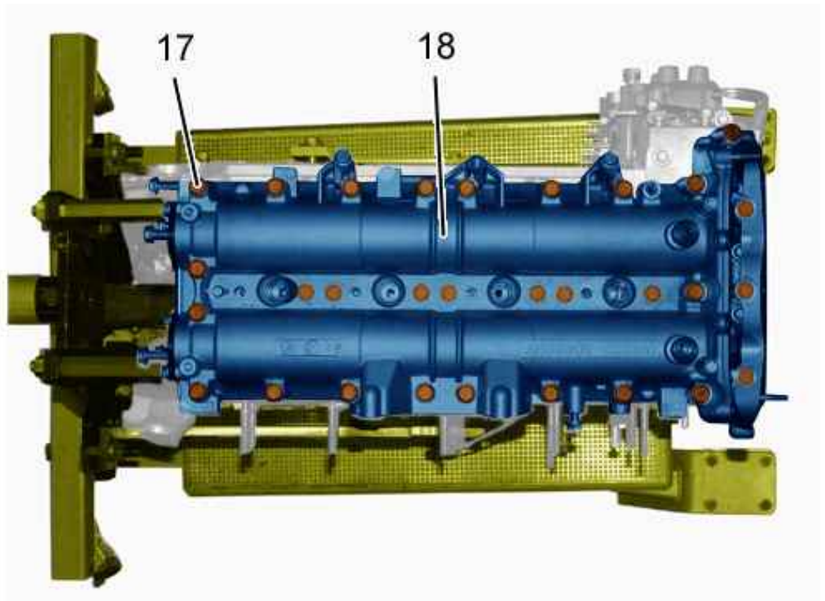

Figure : B1DM00SD

Refit :

- The cylinder head cover (18)
- The 30 bolts (17) ; Tighten to 2,5 ± 0,3 daN.m

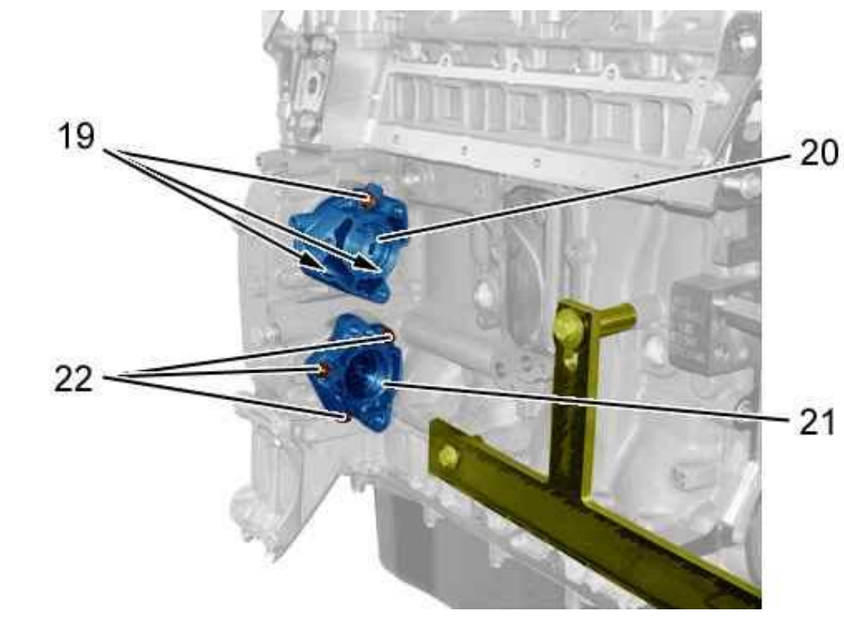

Figure : B1CM00DD

Refit :

- The brackets (20), (21) (with new seals)
- The nuts (19) and (22) ; Tighten to 2,5 ± 0,3 daN.m

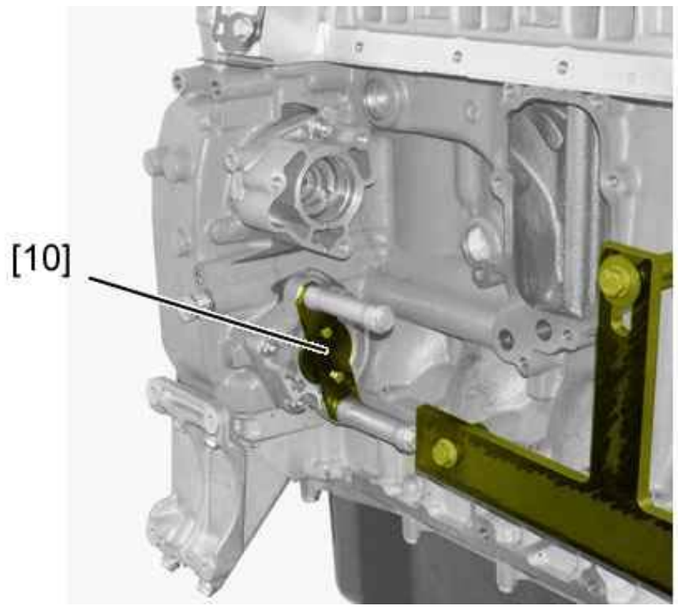

Figure : B1CM00ED

Immobilise the sprocket of the power steering pump ; Using tool [10].

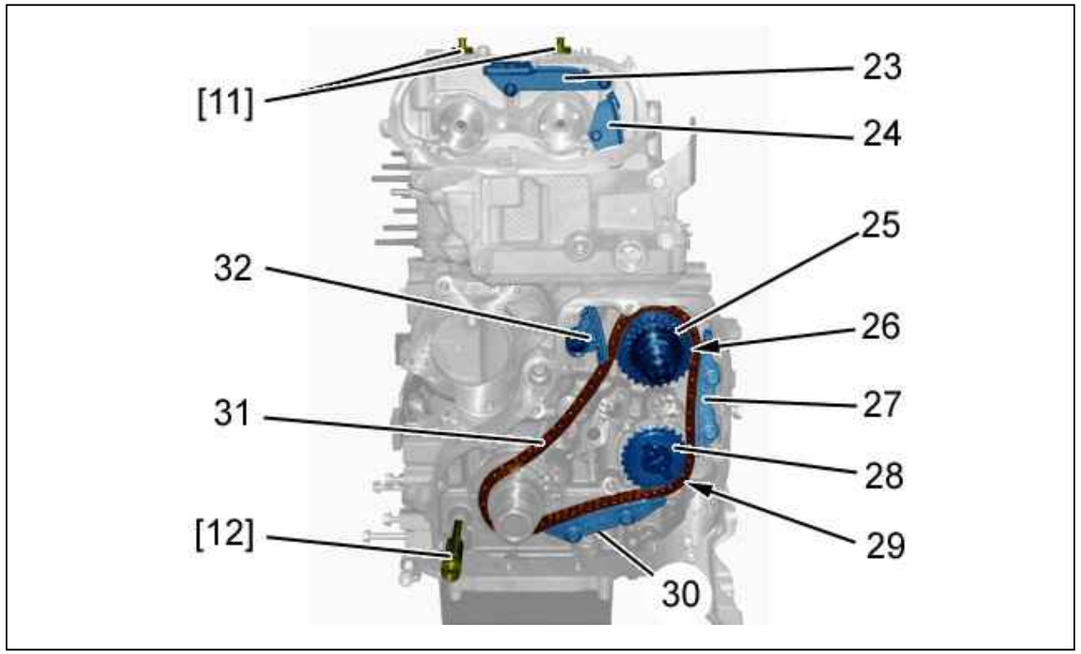

Figure : B1EM004D

CAUTION : Check the condition of the chain pads and pulleys (replace if necessary).

Peg :

- The camshafts ; Using the tools [11]
- The crankshaft ; Using tool [12]

Fit :

- The chain pads (23), (24) ; Tightening to 1,0 ± 0,1 daN.m
- The chain pad (32)
- The pinion (28)
- The (29) bolt (Screw in without tightening) (by hand)
- The timing chain (31) (New)
- The double sprocket (25)
- The (26) bolt (Screw in without tightening) (by hand)
- The chain pads (27), (30) ; Tightening to 2,5 ± 0,3 daN.m

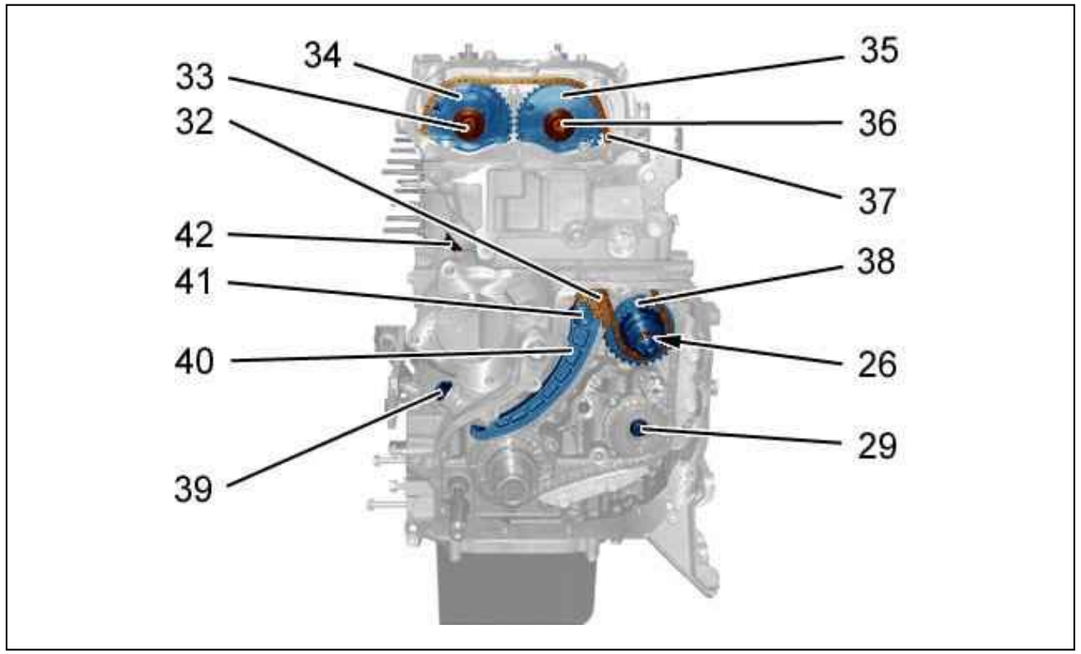

Figure : B1EM005D

CAUTION : Check that the timing chain (37) is tight between the sprockets (38), (35), (34).

CAUTION : The markings on the camshaft sprockets (34), (35) must be towards the engine.

Position the timing chain (37) on the camshaft sprocket (38), (35).
Refit :

- The camshaft gear (35)
- The (36) bolt (without tightening)

Position the timing chain (37) on the camshaft sprocket (34).
Refit :

- The camshaft gear (34)
- The (33) bolt (without tightening)

CAUTION : Check the position of the timing chain (37) on the chain pad (32).

Fit :

- The chain pad (40)
- The (41) bolt ; Tighten to 4 ± 0,4 daN.m
- The hydraulic tensioner (39) (New) ; Tightening to 5 ± 0,5 daN.m

Tighten the bolt (29) to 13 ± 1,3 daN.m.

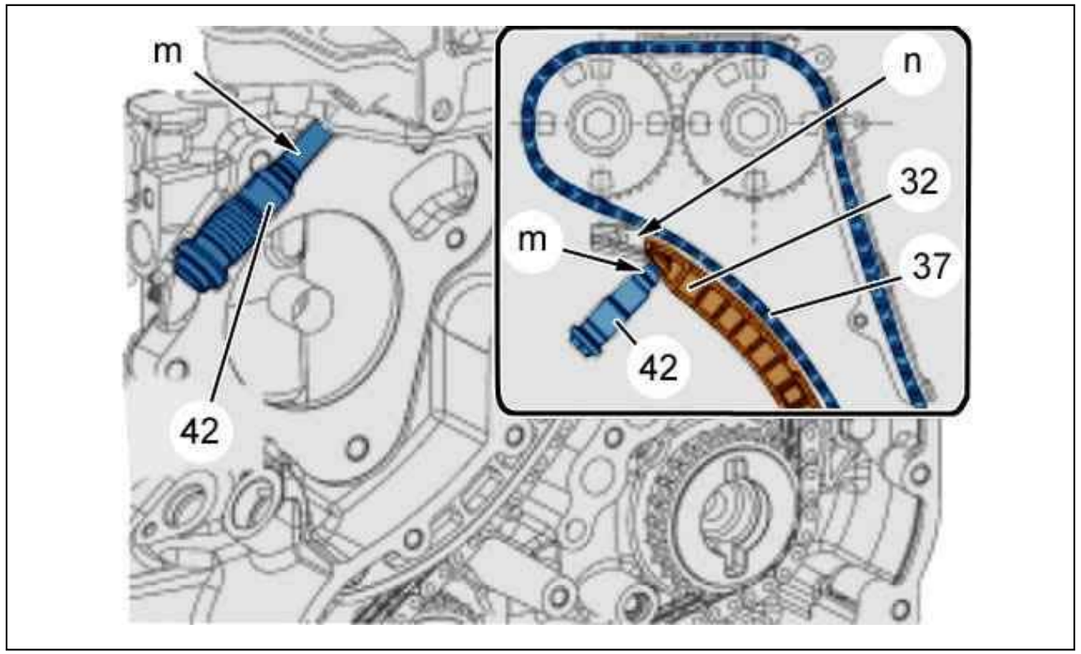

Figure : B1EM006D

CAUTION : The hydraulic tensioner (42) is fitted with a non-return device. If the piston of the tensioner (42) comes out of its housing during refitting (at "m") : Replace the hydraulic tensioner (42).

Refit the hydraulic tensioner (42) ; Tightening to 5 ± 0,5 daN.m.
Check the operation of the hydraulic tensioner (42) :

- Compress the piston "m" of the hydraulic tensioner (42) by pressing on the chain pad (32) (as "n") ; By means of a screwdriver
- Check that the piston "m" of the hydraulic tensioner (42) tensions the timing chain (37)

N.B. : Pass the screwdriver through the opening in the upper timing cover .

Tighten the bolts (33), (36), (26) to 11 ± 1,1 daN.m.
Remove the tools [10], [11], [12].
Turn the crankshaft clockwise through 4 revolutions.
Refit the tools [11], [12].

CAUTION : Check that the camshafts and crankshaft are correctly pegged : If pegging is not possible, restart the operation.

Refit :

- The oil pump module and vacuum pump spider
- The oil pump module, vacuum pump and its new seal
- The oil pump module and vacuum pump fixing bolts ; Tighten to 2,5 ± 0,3 daN.m

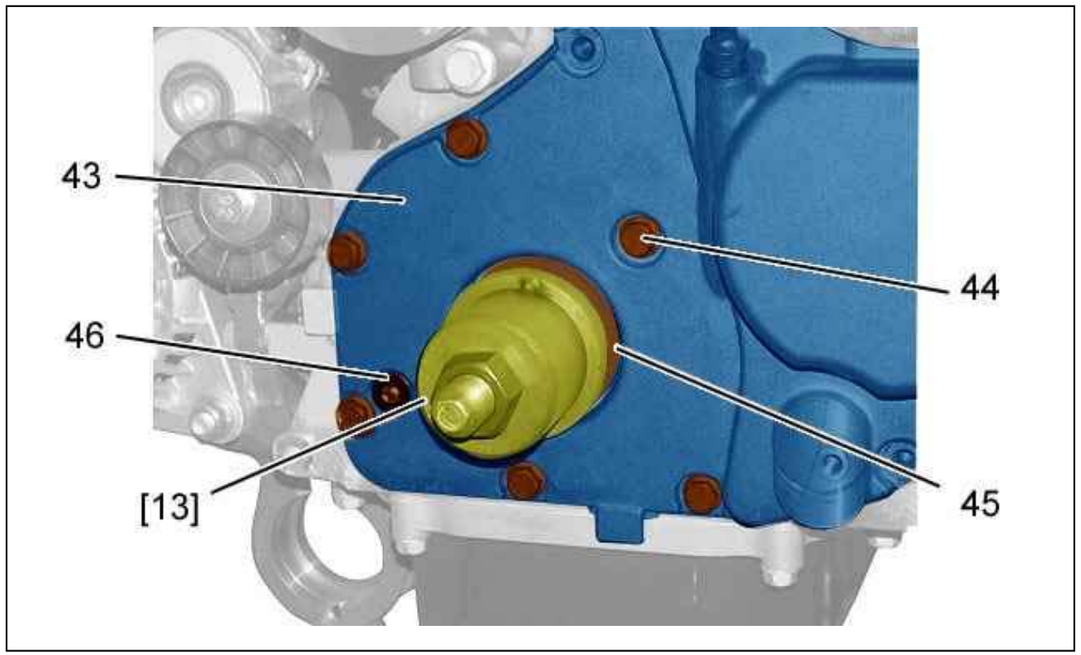

Figure : B1BM009D

Refit :

- The bottom timing cover (43)
- The bolts (44) (Screw in without tightening) (by hand)
- The (46) bolt
- The crankshaft sealing ring (45) ; Using tool [13]

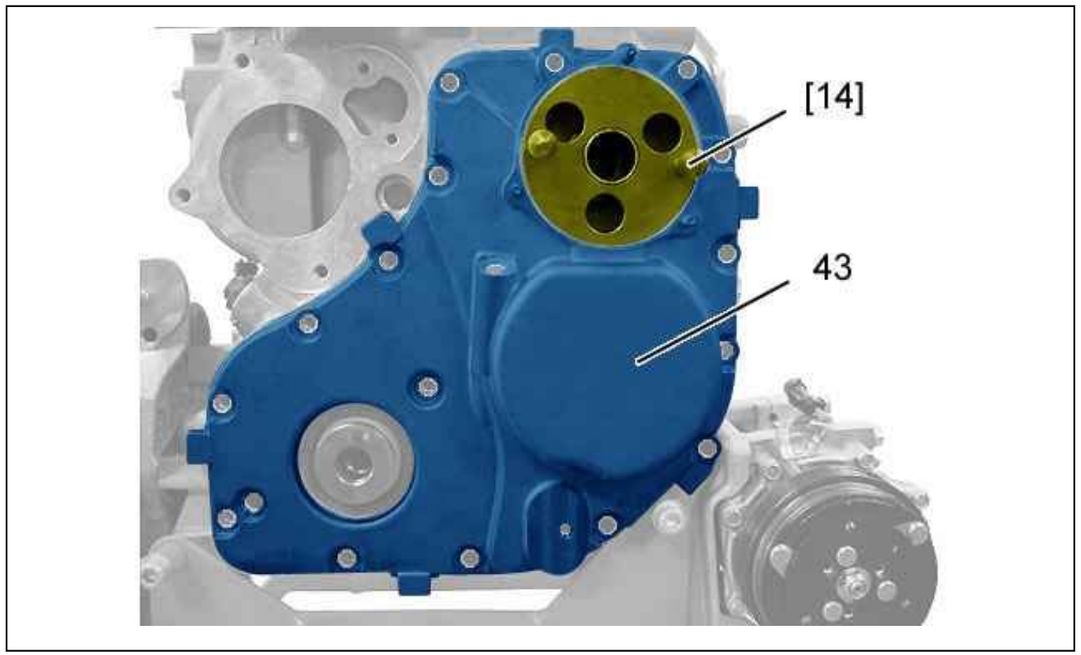

Figure : B1EM007D

Centre the timing cover (43) ; Using tool [14].
Tighten the bolts (44) to 2,5 ± 0,3 daN.m.
Refit the camshaft pinning plugs to the cylinder head cover .

REMOVING - REFITTING : ENGINE RING SEALS

ESSENTIAL : Observe the safety and cleanliness recommendations .

1. Tooling

tool	Reference	Designation
 Figure : E5AB0XXT	[0191-2G]	tool for removing sealing ring (timing side)
 Figure : E5AB0XZT	[0191-2H]	tool for refitting sealing ring (timing side)
 Figure : E5AB0Y0T	[0191-2E]	tool for removing sealing ring (flywheel side)
 Figure : E5AB0Y1T	[0191-2F]	tool for refitting sealing ring (flywheel side)
	[0191-2K]	Accessories drive pulley immobilisation tool



Figure : E5AB0XOT

2. Removing

ESSENTIAL : Respect the safety and cleanliness recommendations that are specific to high pressure diesel injection (HDi) engines.

Disconnect the battery.

2.1. Sealing ring (timing side)

Remove the accessories drive belt(s).
Support the engine using a workshop crane.
Remove the right-hand engine mounting .

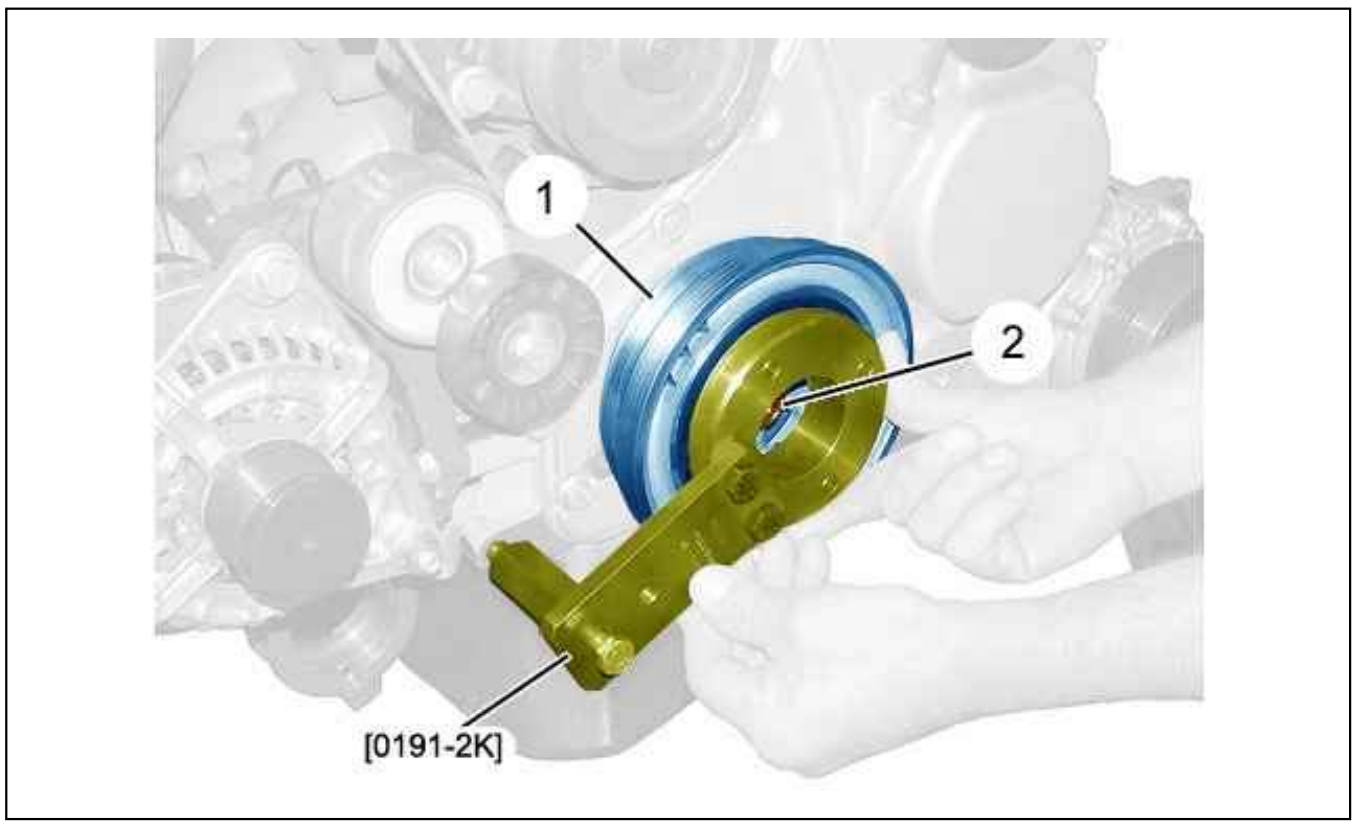

Figure : B1BG2GDD

Lower the engine on the right-hand side to gain access to the bolt (2).
[0191-2K].

Remove :

- The (2) bolt
- The ancillary drive pulley (1)

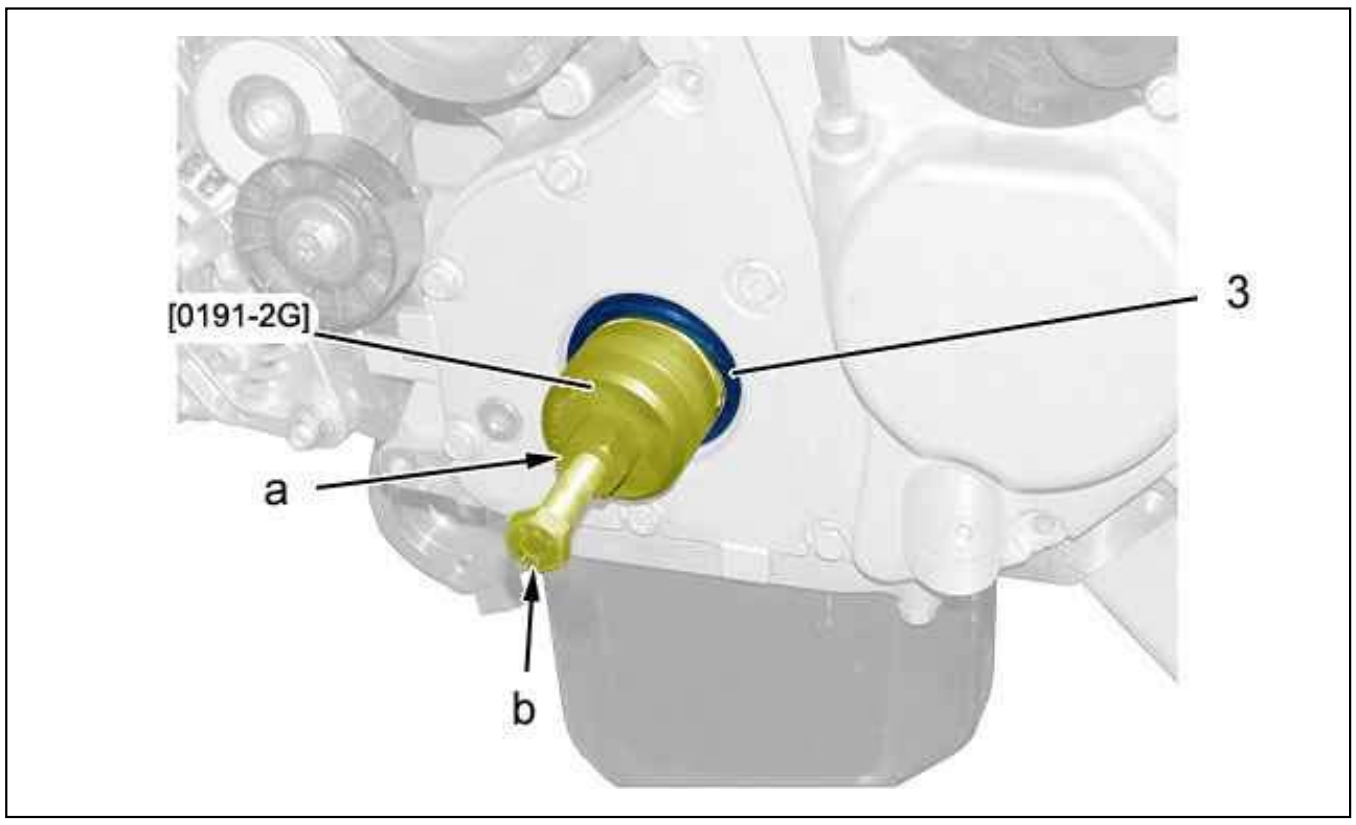

Figure : B1BG28TD

Screw the tool [0191-2G] in the sealing ring (3).

Immobilise the tool [0191-2G] (at "a").
Extract the sealing ring (3) by turning the bolt of the tool [0191-2G] (at "b").

2.2. Sealing ring (flywheel side)

Remove :

- The gearbox
- The clutch
- The flywheel

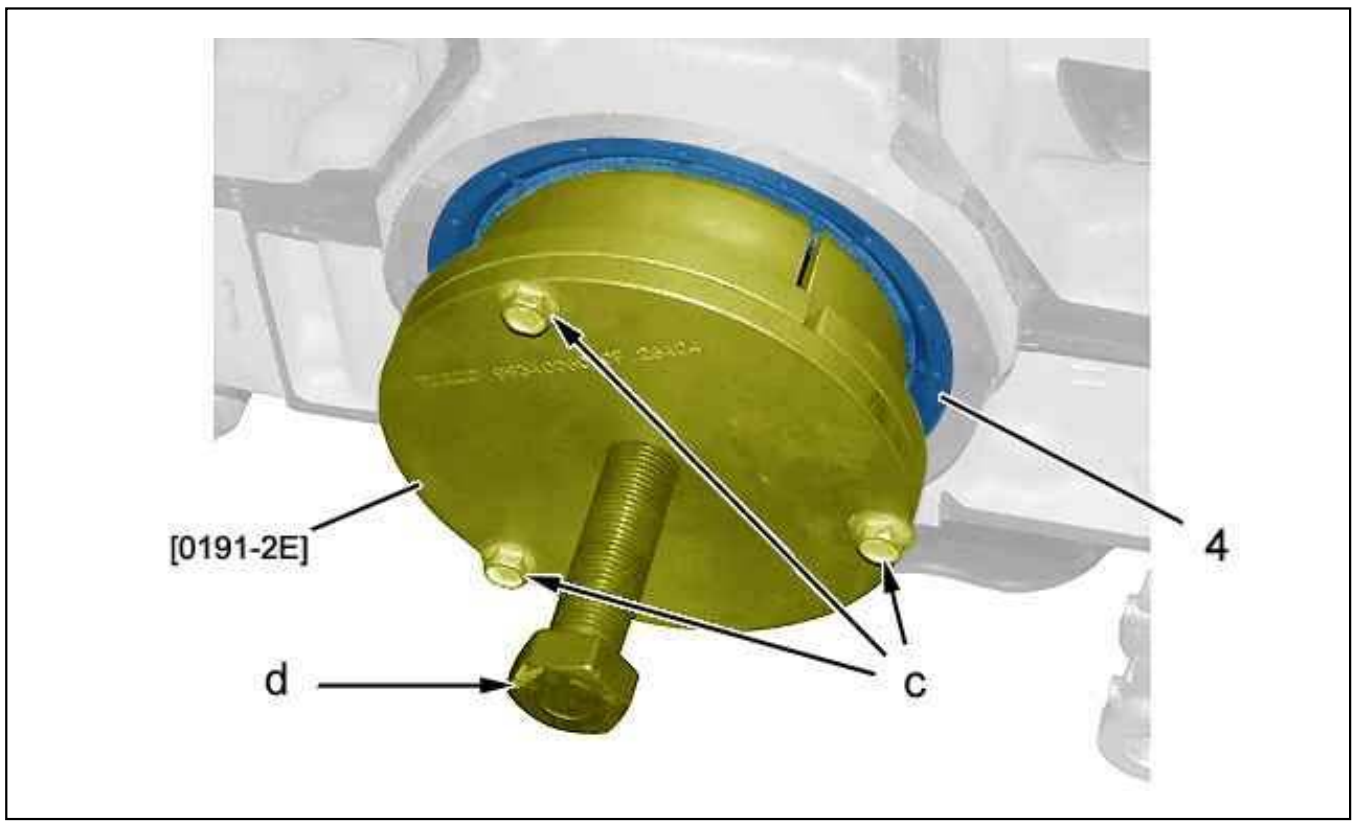

Figure : B1BG28WD

Position the 3 claws of the tool [0191-2E] on the collar of the sealing ring (4).
Tighten the claws of the tool [0191-2E] ; Using the bolts "c".
Extract the sealing ring (4) by turning the bolt of the tool [0191-2E] (at "d").

3. Refitting

3.1. Sealing ring (timing side)

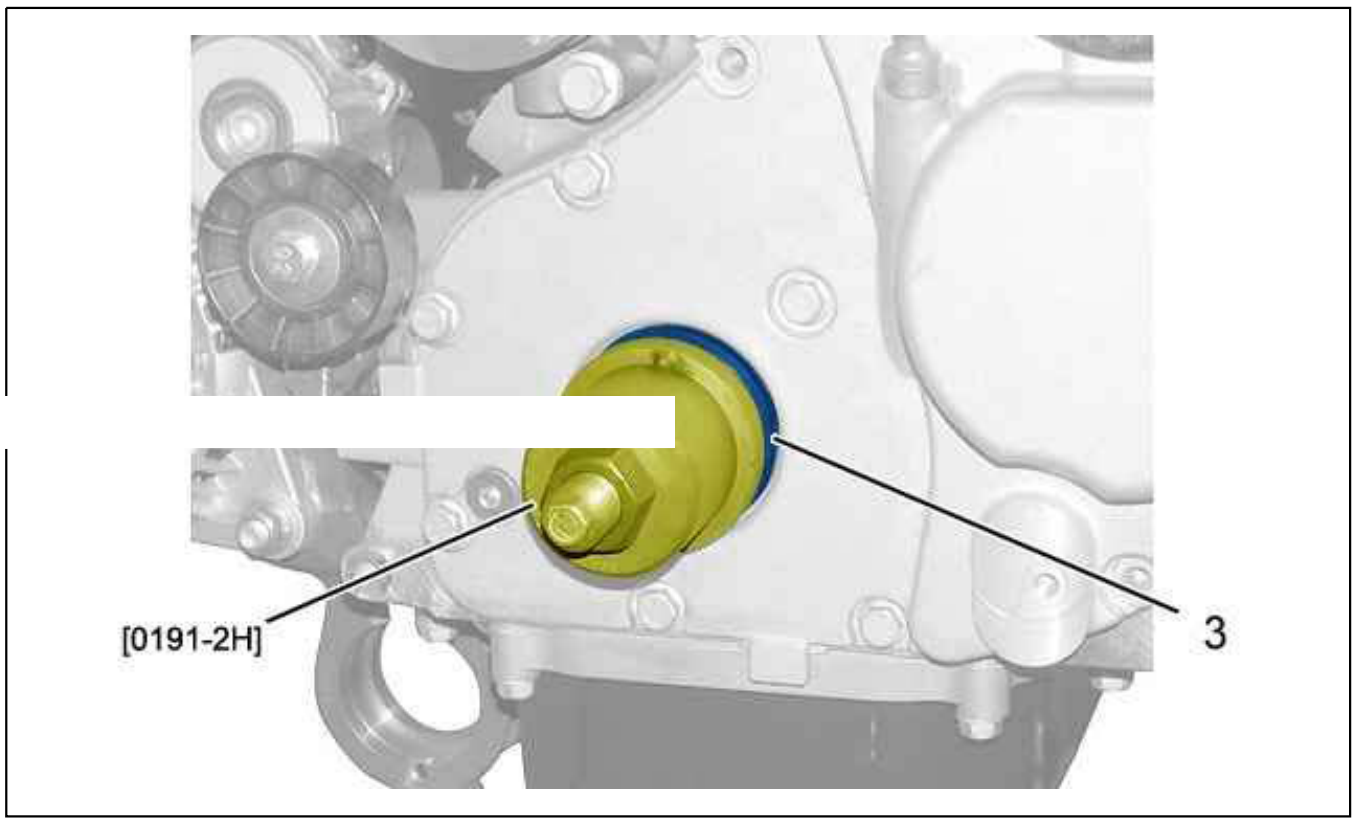

Figure : B1BG28ZD

Refit the ring seal (3) ; Using tool [0191-2H].
Remove the tool [0191-2H].
Refit :

- The ancillary drive pulley (1)
- The (2) bolt
- The right-hand engine mounting
- The accessories drive belt(s)

3.2. Sealing ring (flywheel side)

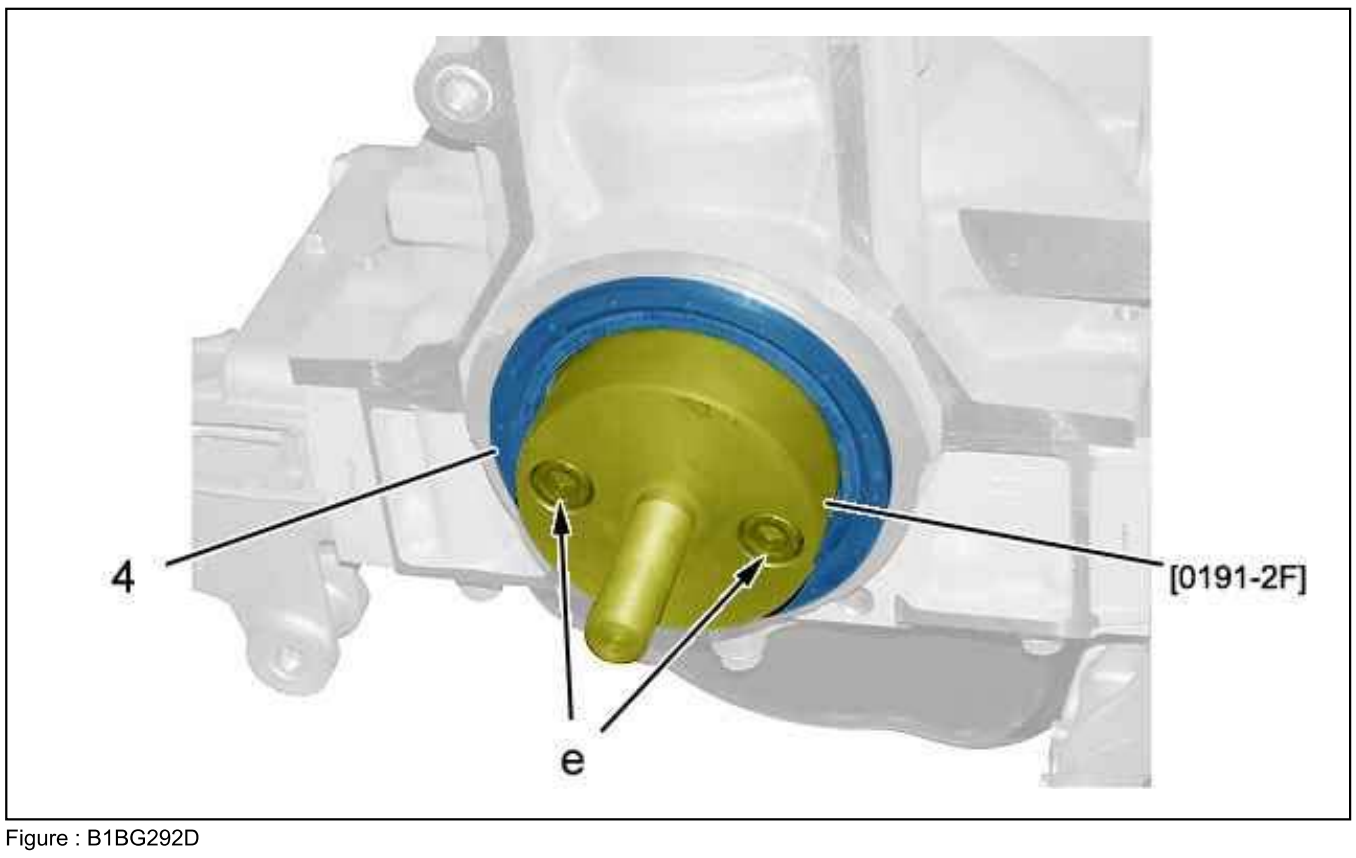

Figure : B1BG292D

Position the centring cone of the tool [0191-2F] on the crankshaft ; Using the bolts "e".
Place the sealing ring (4) on the centring cone of the tool [0191-2F].

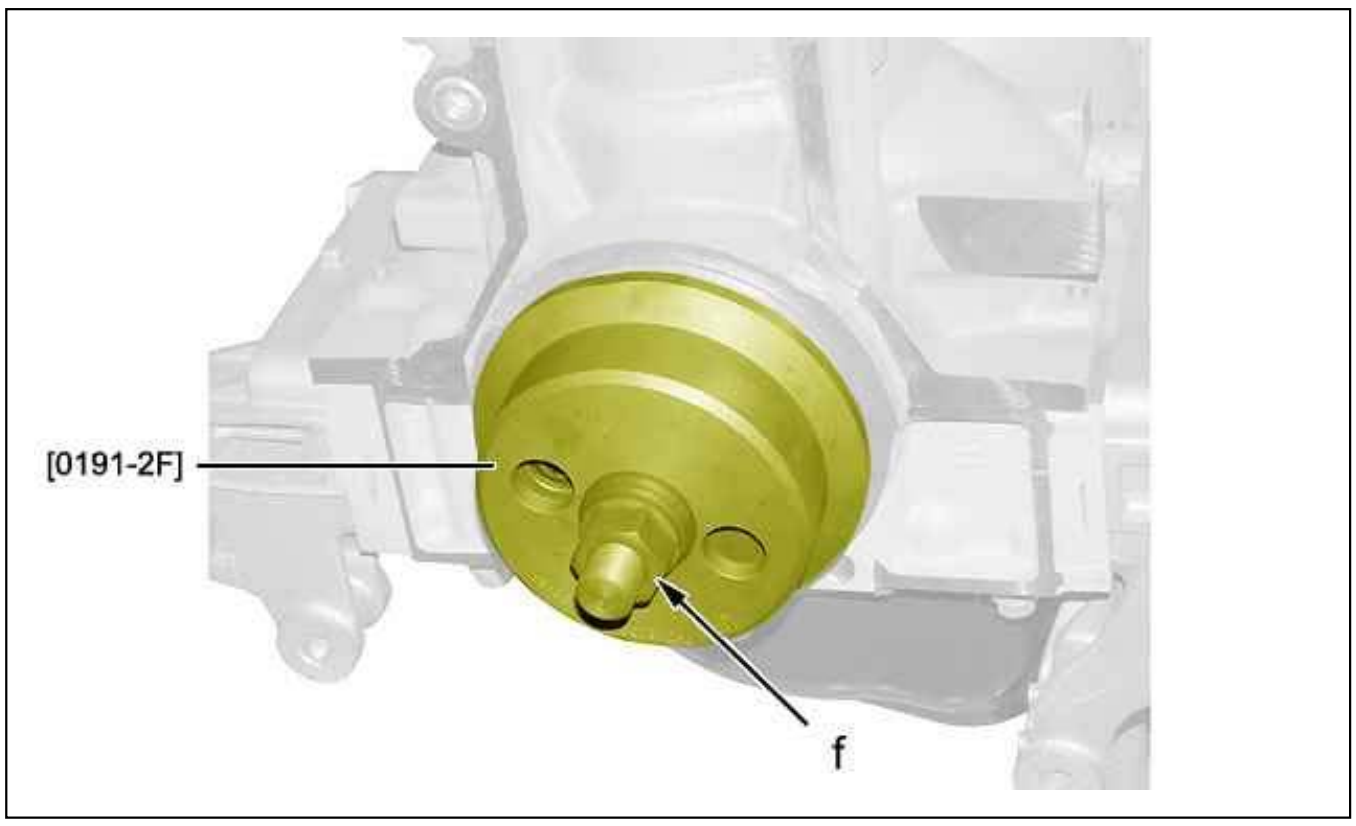

Figure : B1BG295D

Position the cap of the tool [0191-2F] on the centring cone of the tool [0191-2F].

Stop the tightening of the nut when the cap of the tool [0191-2F] is at the limit on the cylinder block .
Remove the tool [0191-2F].
Refit :

- The flywheel
- The clutch
- The gearbox

REMOVING - REFITTING : ACCESSORIES DRIVE BELTS

ESSENTIAL : Observe the safety and cleanliness recommendations .

1. Tooling

tool	Reference	Designation
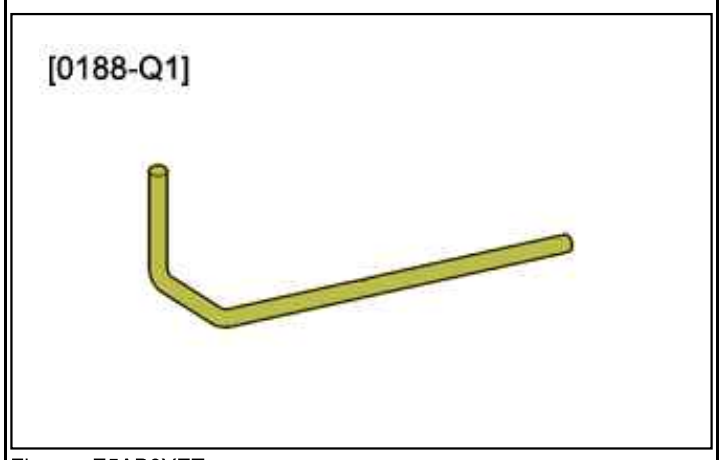 Figure : E5AB0YET	[0188-Q1]	4 mm diameter pin
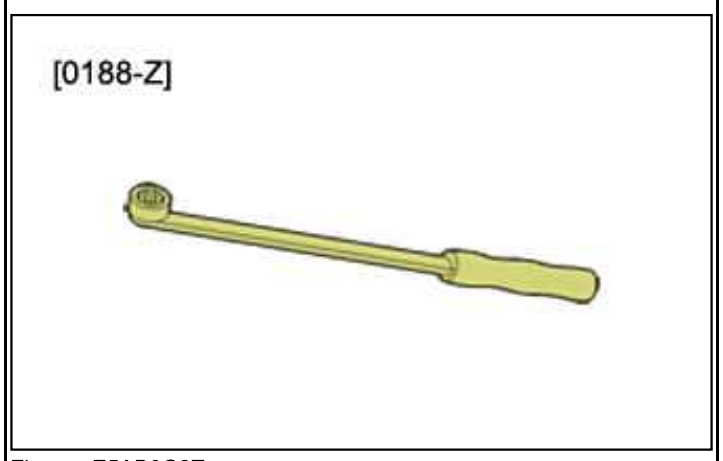 Figure : E5AB0G3T	[0188-Z]	Dynamic tensioner compression lever
 Figure : E5AB10XT	[0191-2T]	Socket for removing the accessories drive belt
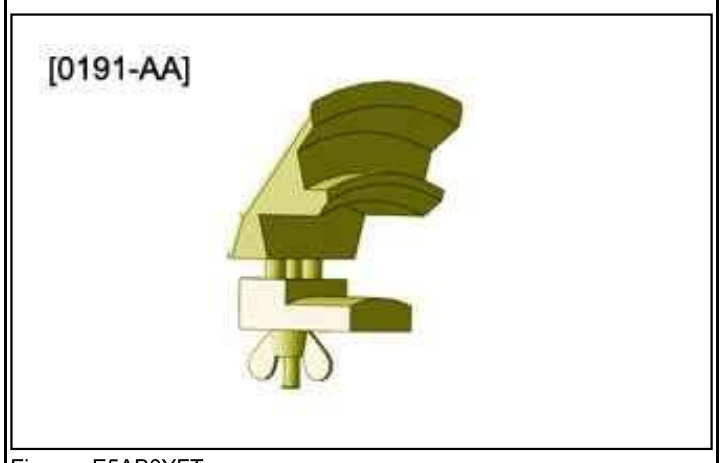 Figure : E5AB0YFT	[0191-AA]	Elastic auxiliary drive belt removal tool
	[0191-AB]	Elastic auxiliary drive belt fitting tool

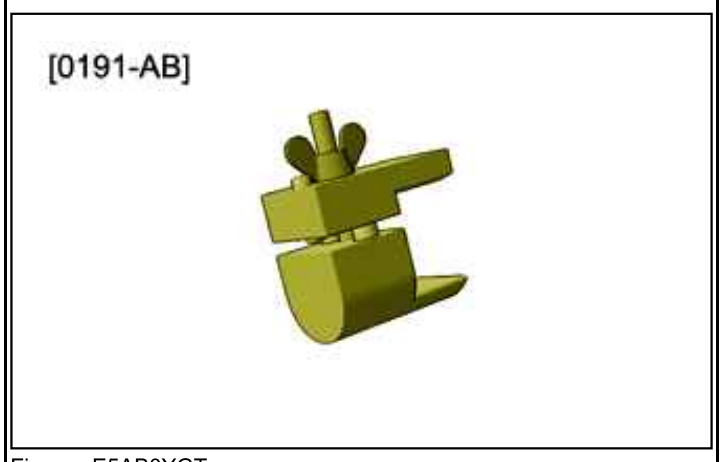

Figure : E5AB0YGT

2. Removing

Remove :

- The front right headlamp
- The sound insulation under the engine
- The front right wheel

2.1. Vehicle without air conditioning

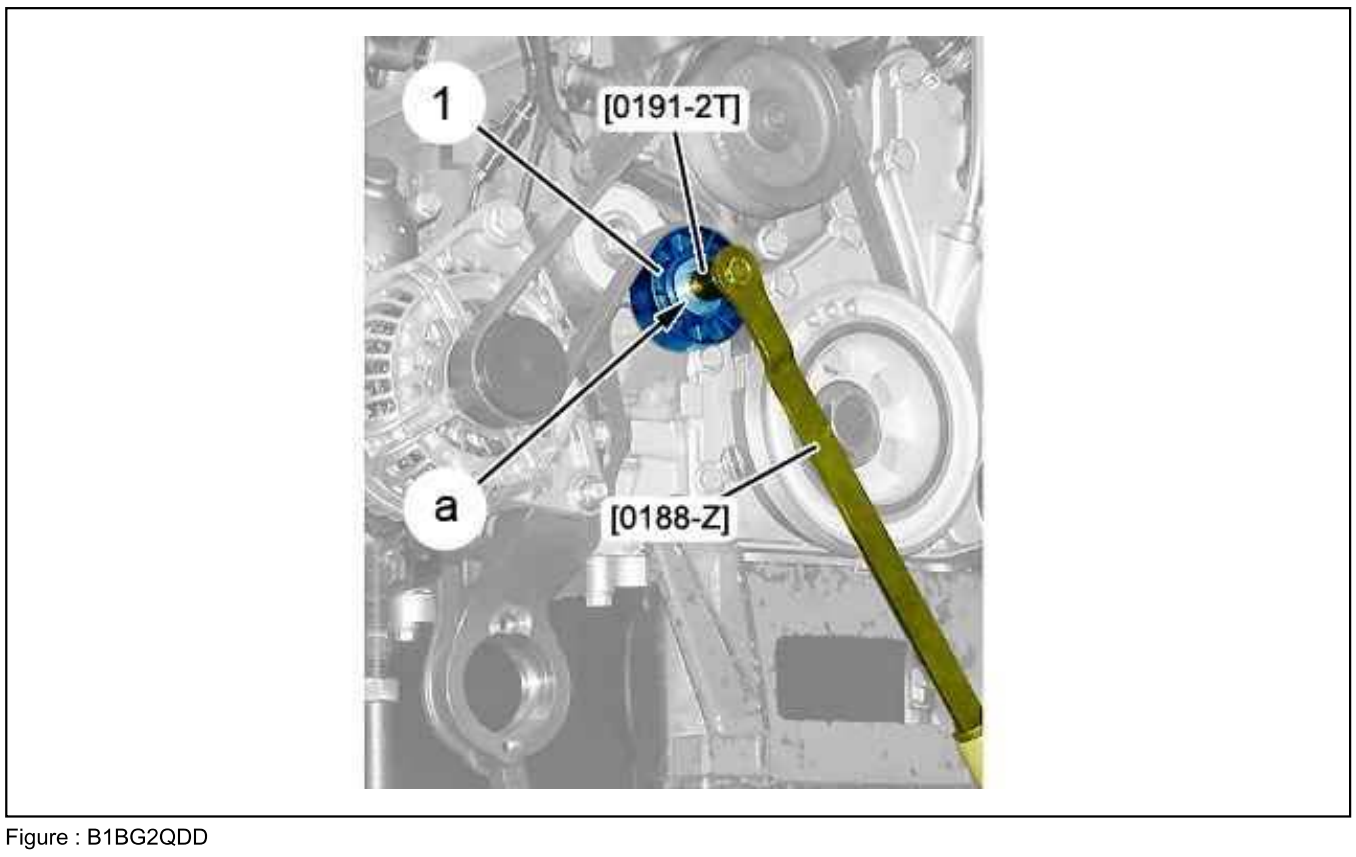

Figure : B1BG2QDD

CAUTION : Note the direction of fitting of the alternator and coolant pump belt if being re-used.

Compress the dynamic roller tensioner (1) (at "a") (clockwise) ; Using the tools [0188-Z], [0191-2T].

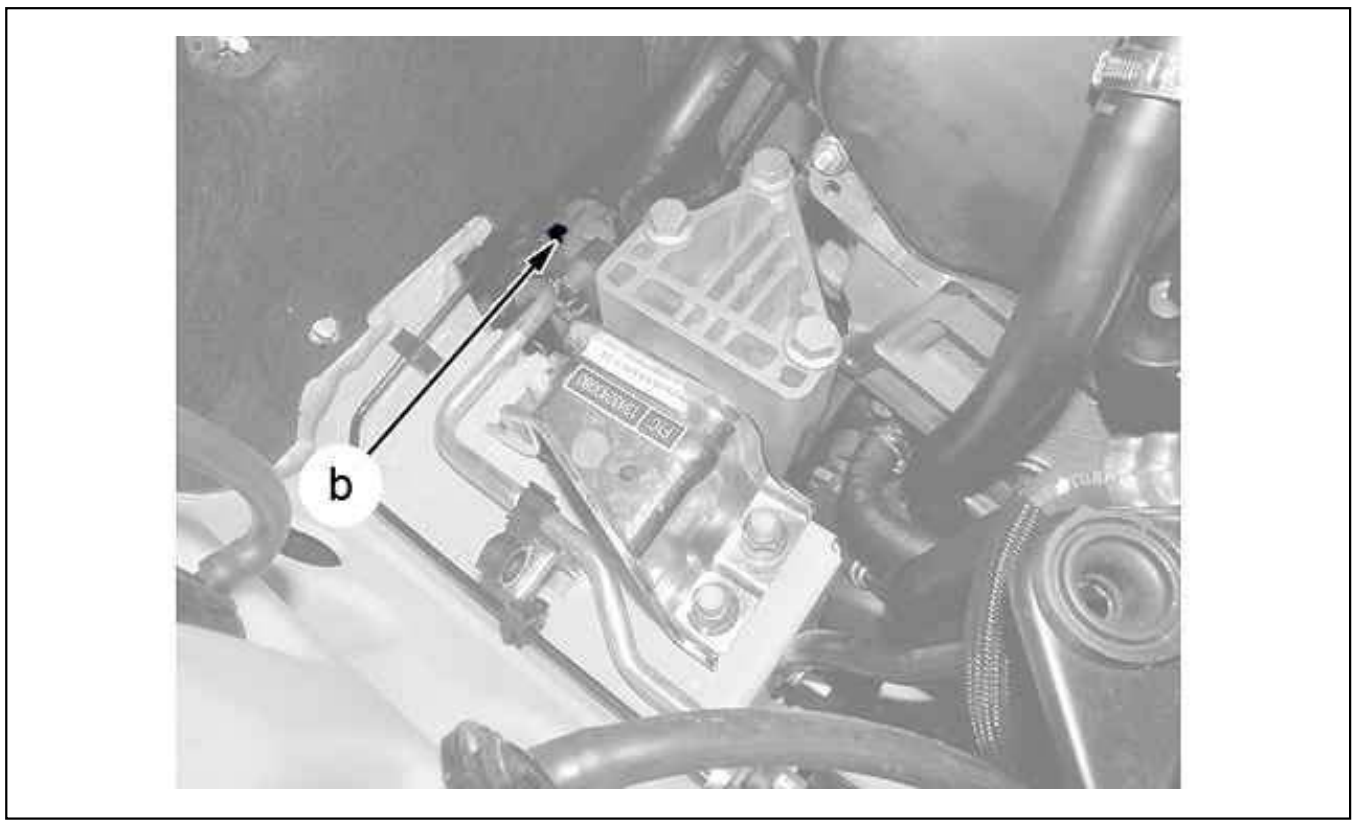

Figure : B1BPSSDD

Peg (at "b") ; Using tool [0188-Q1].
Remove : The alternator and coolant pump belt.

CAUTION : Check that the dynamic roller tensioner (1) turns freely (no clearance or points of resistance).

2.2. Vehicle with air conditioning

2.2.1 - Flexible ancillary drive belt .

CAUTION : Before removing, and for any re-use of the elastic auxiliary drive belt once removed, it is compulsory for the engine to be at ambient temperature (Below 30 °C) ; In all other cases, replace the elastic auxiliary drive belt with a new elastic belt.

N.B. : Removal while the engine is warm results in irreversible and invisible damage to the elastic auxiliary drive belt.

CAUTION : Note the direction of rotation of the elastic auxiliary drive belt if being re-used (Before removal).

CAUTION : If it is to be replaced, cut the elastic auxiliary drive belt and remove it.

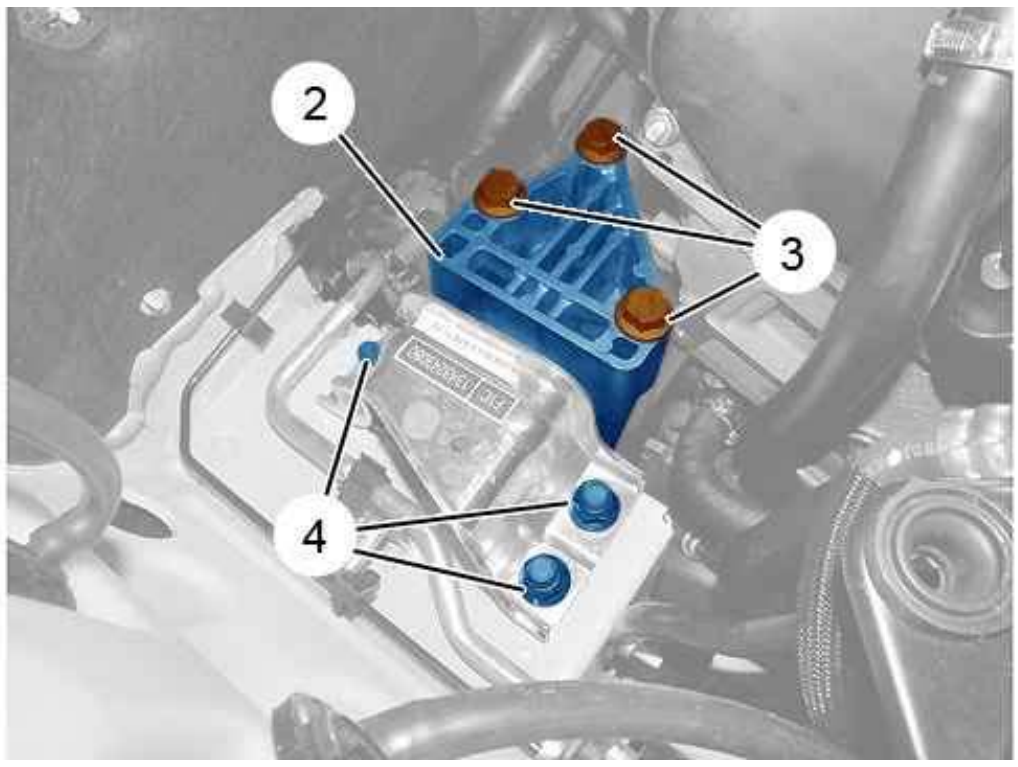

Figure : B1BPSSED

Place the engine in a sling ; Using a workshop crane.
Remove :

- The nuts (4)
- The bolts (3)
- The engine mounting (2)

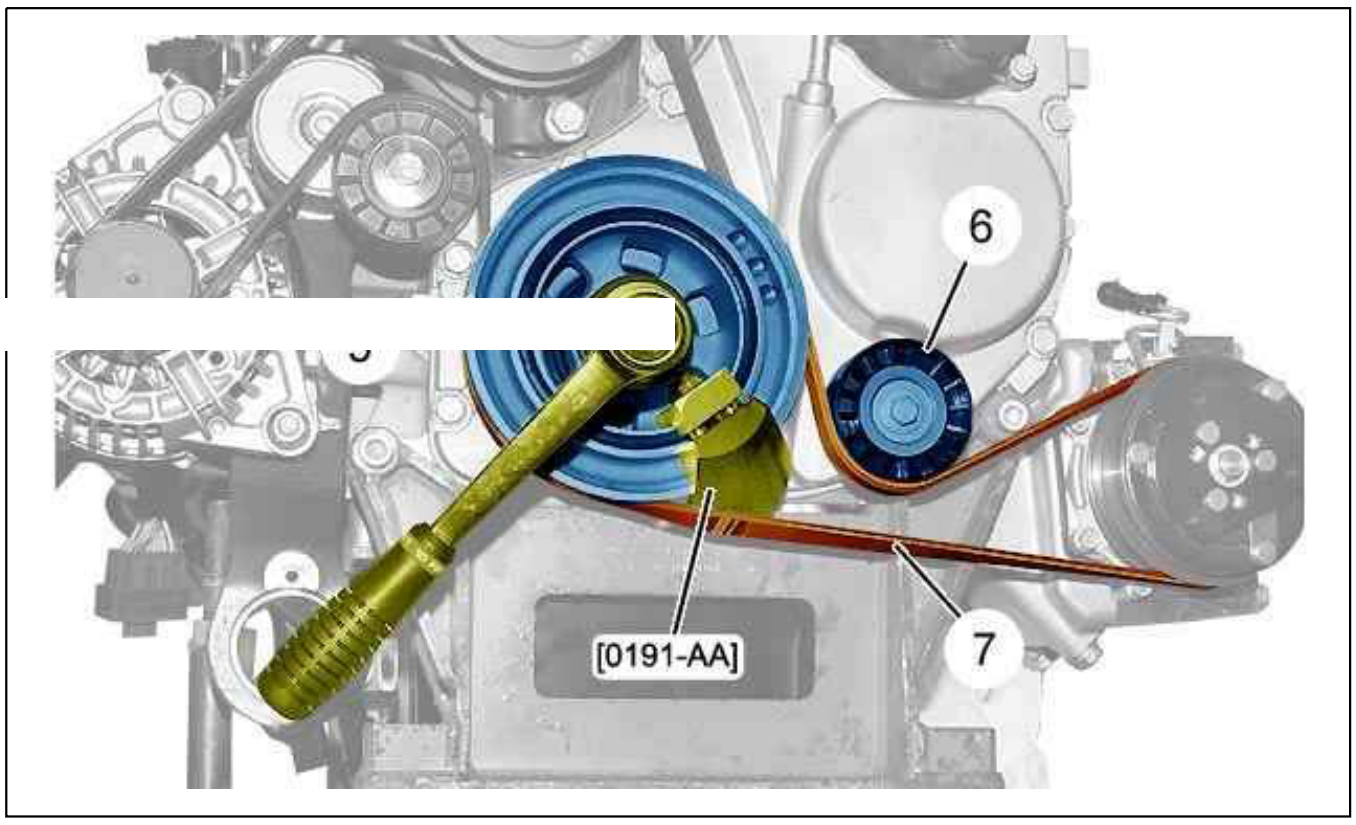

Figure : B1BG2QED

Lower the engine.
Position tool [0191-AA] on the accessories drive pulley (5).
Turn the accessories drive pulley (5) (In the normal direction of rotation).
Remove the flexible ancillary drive belt (7).

CAUTION : Check that the roller (6) turns freely (no play or tight spot).

2.2.2 - Water pump and alternator belt.

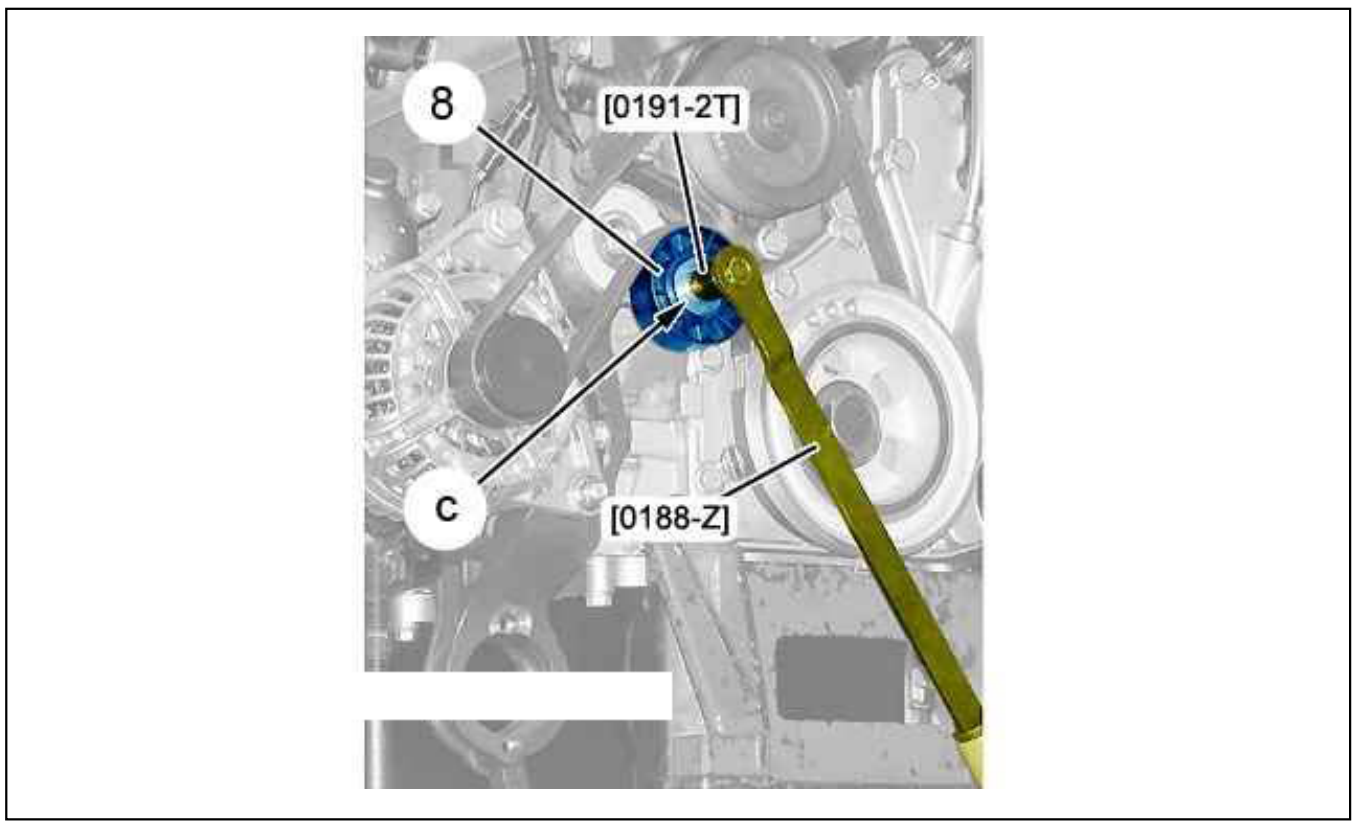

Figure : B1BG2QFD

CAUTION : Note the direction of fitting of the alternator and coolant pump belt if being re-used.

Compress the dynamic roller tensioner (8) (at "c") (clockwise) ; Using the tools [0188-Z], [0191-2T].

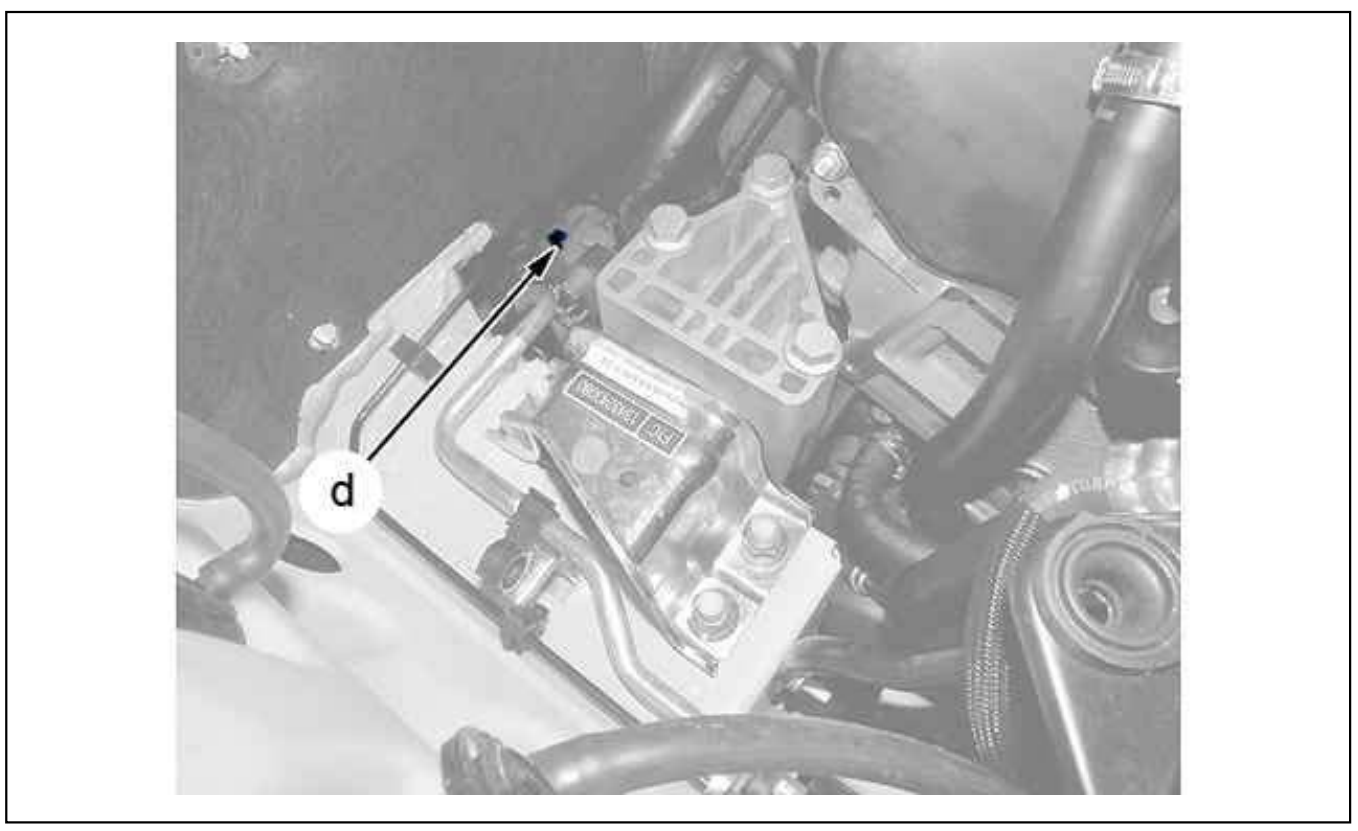

Figure : B1BPSSHD

Remove : The alternator and coolant pump belt.

CAUTION : Check that the dynamic roller tensioner (8) turns freely (no clearance or points of resistance).

3. Refitting

3.1. Vehicle without air conditioning

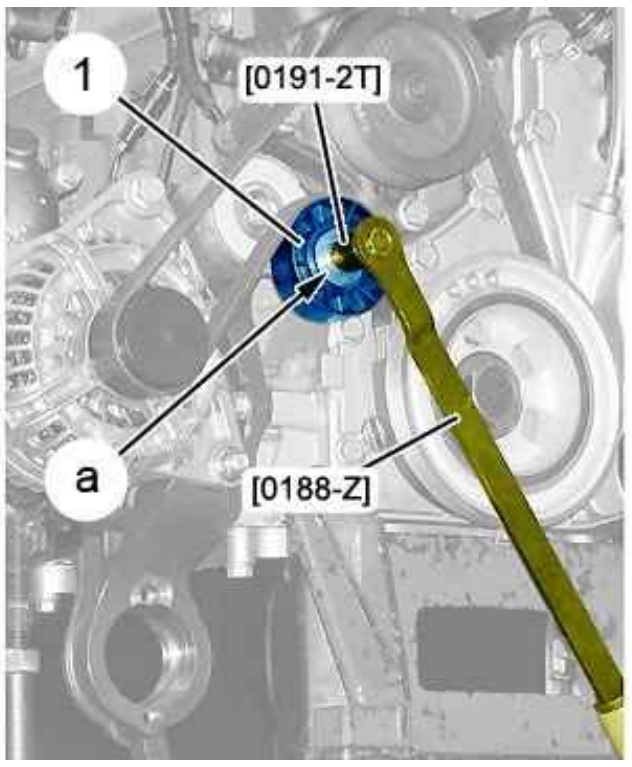

Figure : B1BG2QDD

Refit : The alternator and coolant pump belt.

CAUTION : Check that the alternator and coolant pump belt is correctly positioned in the grooves of the various pulleys.

Compress the dynamic roller tensioner (1) (at "a") (clockwise) ; Using the tools [0188-Z], [0191-2T].
Remove the tool [0188-Q1].

3.2. Vehicle with air conditioning

3.2.1 - Water pump and alternator belt.

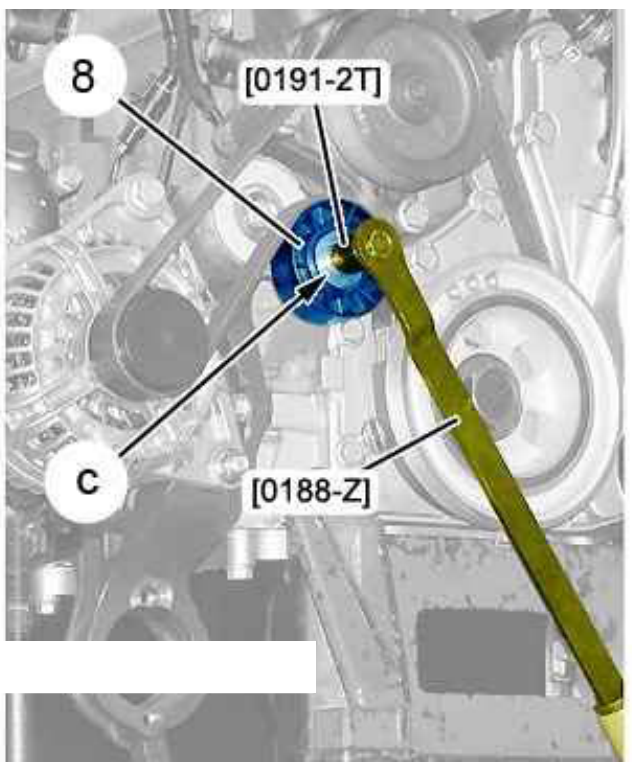

Figure : B1BG2QFD

Refit : The alternator and coolant pump belt.

CAUTION : Check that the alternator and coolant pump belt is correctly positioned in the grooves of the various pulleys.

Compress the dynamic roller tensioner (8) (at "c") (clockwise) ; Using the tools [0188-Z], [0191-2T].
Remove the tool [0188-Q1].
3.2.2 - Flexible ancillary drive belt (7).
Position the tool [0191-AB] on the auxiliary drive pulley (5).

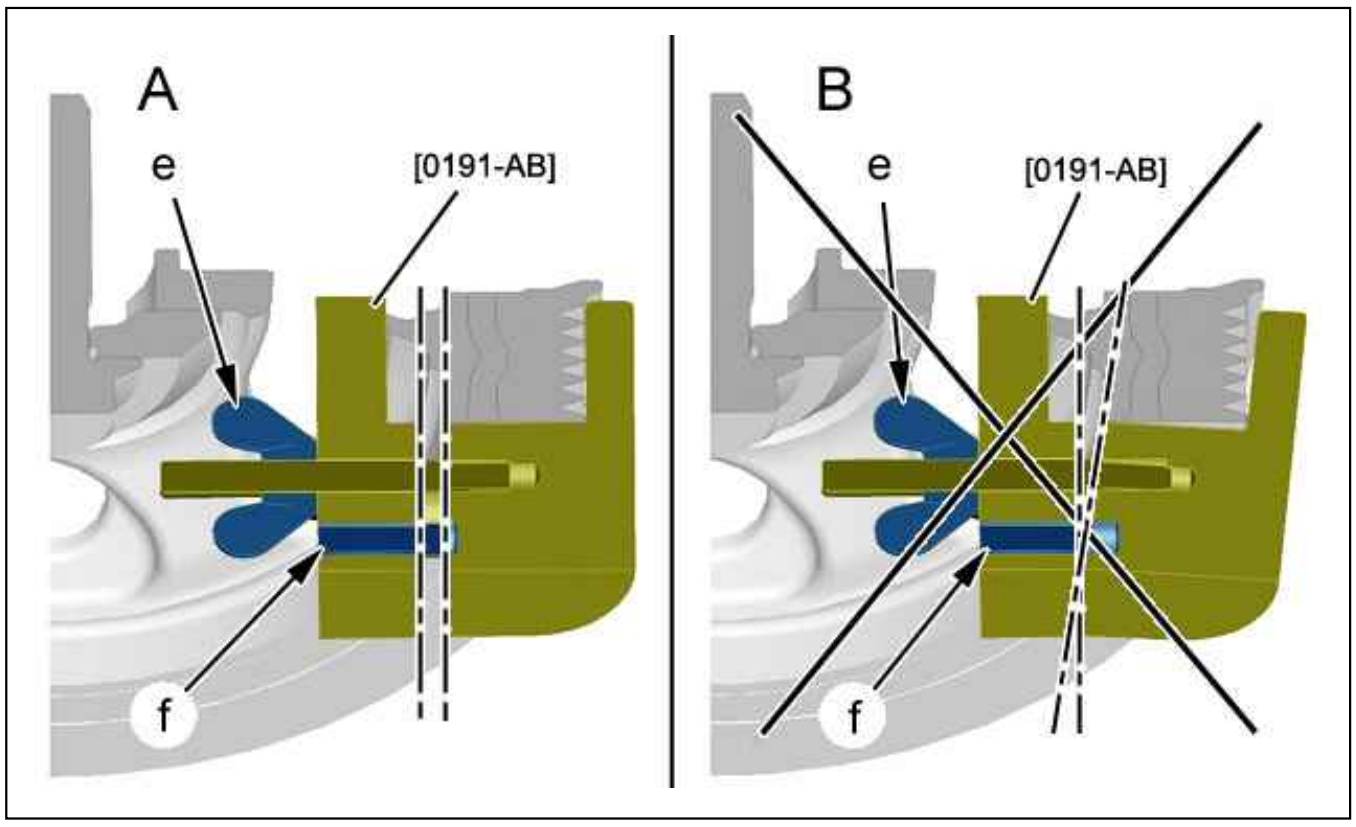

Figure : B1BG2A0D

"A" : Correct fitting.
"B" : Incorrect fitting.
Tighten the wing nut ("e") observing the parallelism between the faces of the 2 components of the tool [0191-AB].
Tighten the bolt "f" to cancel out the twisting effect of the tool [0191-AB] when fitting the flexible ancillary drive belt (7).

N.B. : Failure to have the faces parallel will result in an incorrect positioning of the elastic auxiliary drive belt (7) in the "Vs" of the auxiliary drive pulley (5) fo crankshaft, alternator pulley or air conditioning compressor pulley. Damage to the elastic auxiliary drive belt (7) results in its inevitable destruction after only a few kilometres.

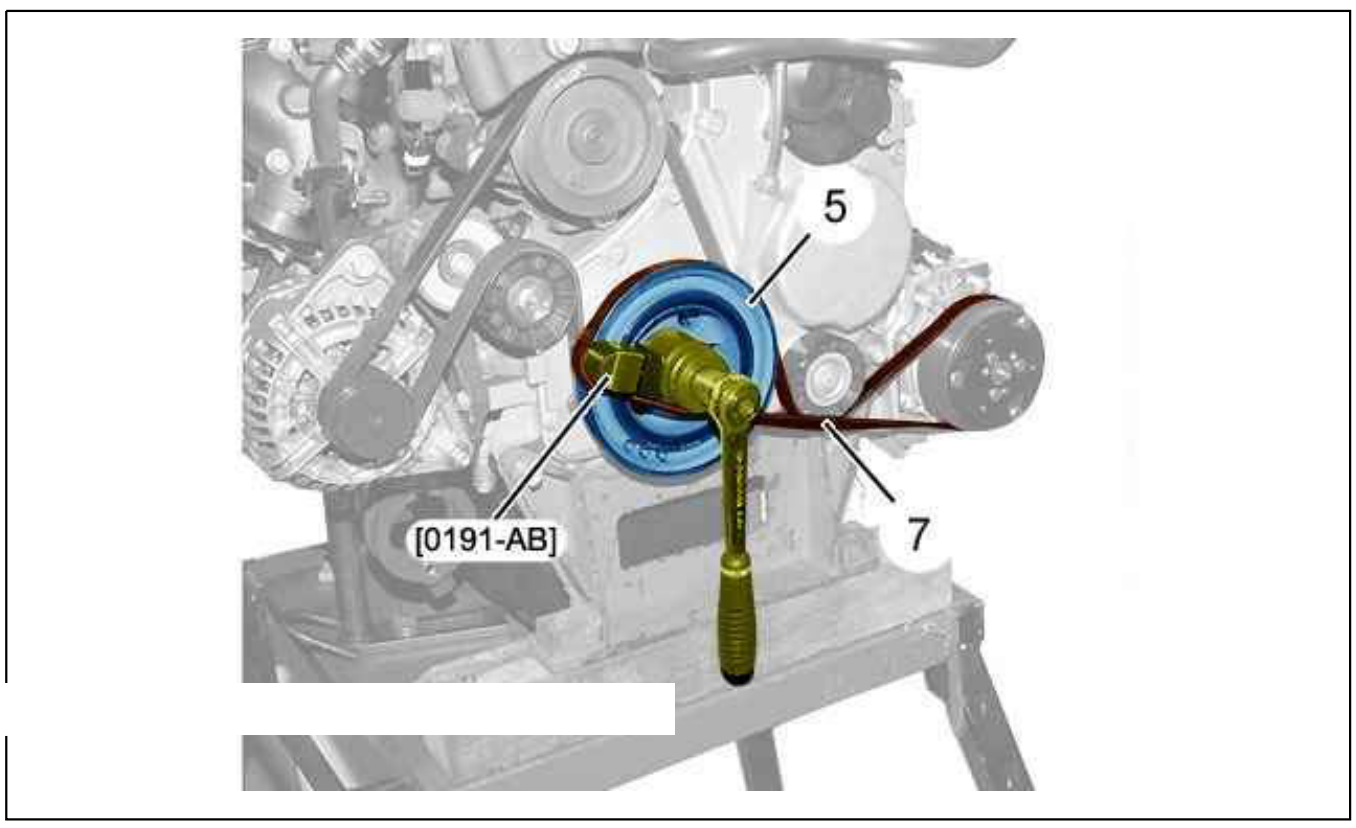

Figure : B1BG2A1D

Refit the flexible ancillary drive belt (7).
Turn the accessories drive pulley (5) anticlockwise until the accessories drive belt (7) is fully fitted onto the pulley (5) of the crankshaft and until tool [0191-AB] has been released.

3.3. Refitting (continued)

Refit the engine mounting (2).
Tighten :

- The bolts (3)
- The nuts (4)

Refit :

- The front right headlamp
- The sound insulation under the engine
- The front right wheel

PROHIBITED OPERATIONS : HDI DIRECT INJECTION SYSTEM BOSCH

1. Protection

CAUTION : Always plug the apertures straightaway after opening up the fuel circuit ; Using the specific plugs kit.

2. Cleaning

CAUTION : The use of a "high pressure" cleaner is prohibited.

CAUTION : Do not use compressed air.

3. Fuel supply system

Recommended fuel : Diesel.

CAUTION : Do not use fuel other than diesel (Risk of destruction of the injection system and of the engine).

CAUTION : The addition of additives such as fuel circuit cleaner/remetalliser, is prohibited.

4. Electrical circuit

Exchanging an engine management ECU between two vehicles makes it impossible to start the vehicles.

CAUTION : Do not supply a diesel injector with 12 volts.

5. high pressure fuel pump

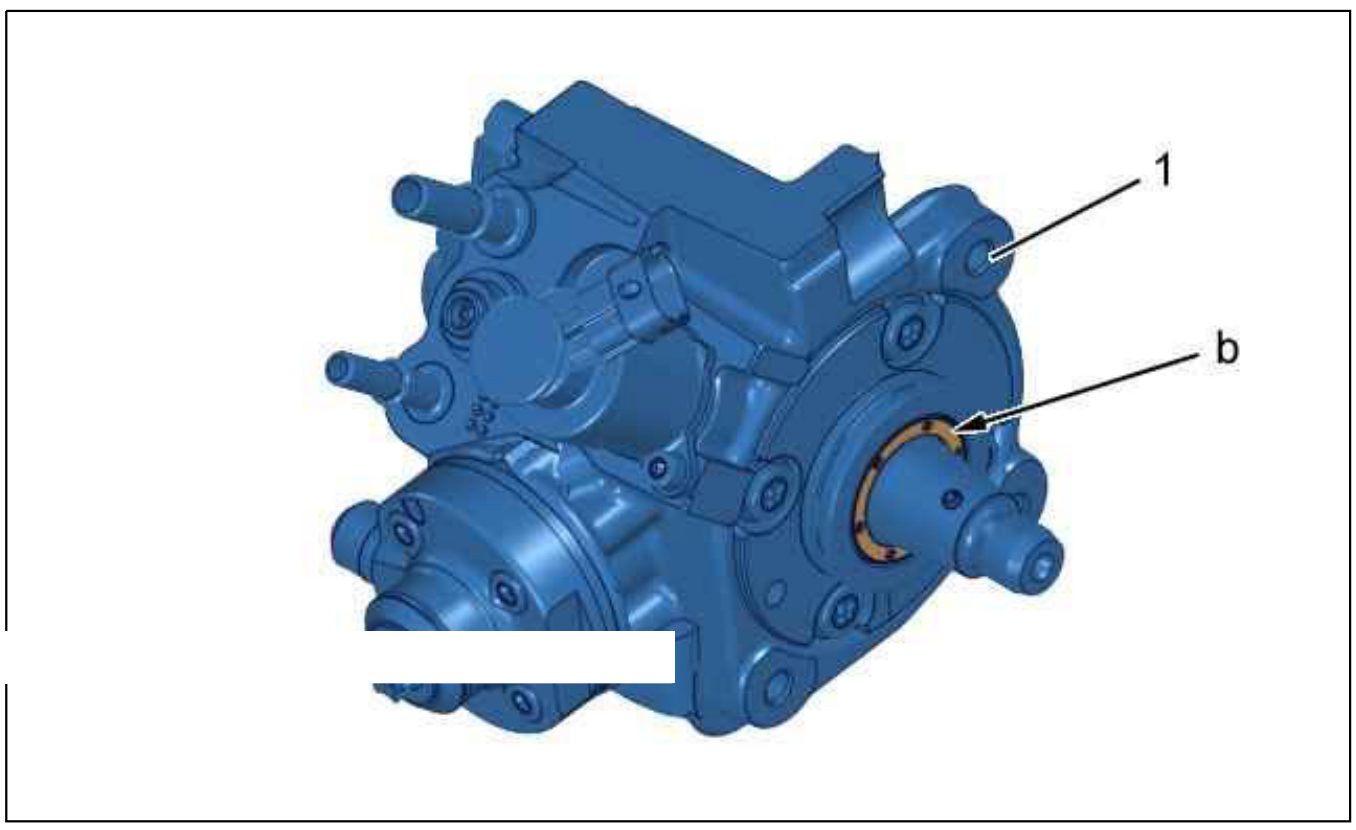

Figure : B1BK3YND

Do not separate the ring seal from the high pressure fuel pump (1) (at "b") (No replacement parts).

6. Diesel injector

CAUTION : Cleaning operations using diesel and ultrasound are prohibited.

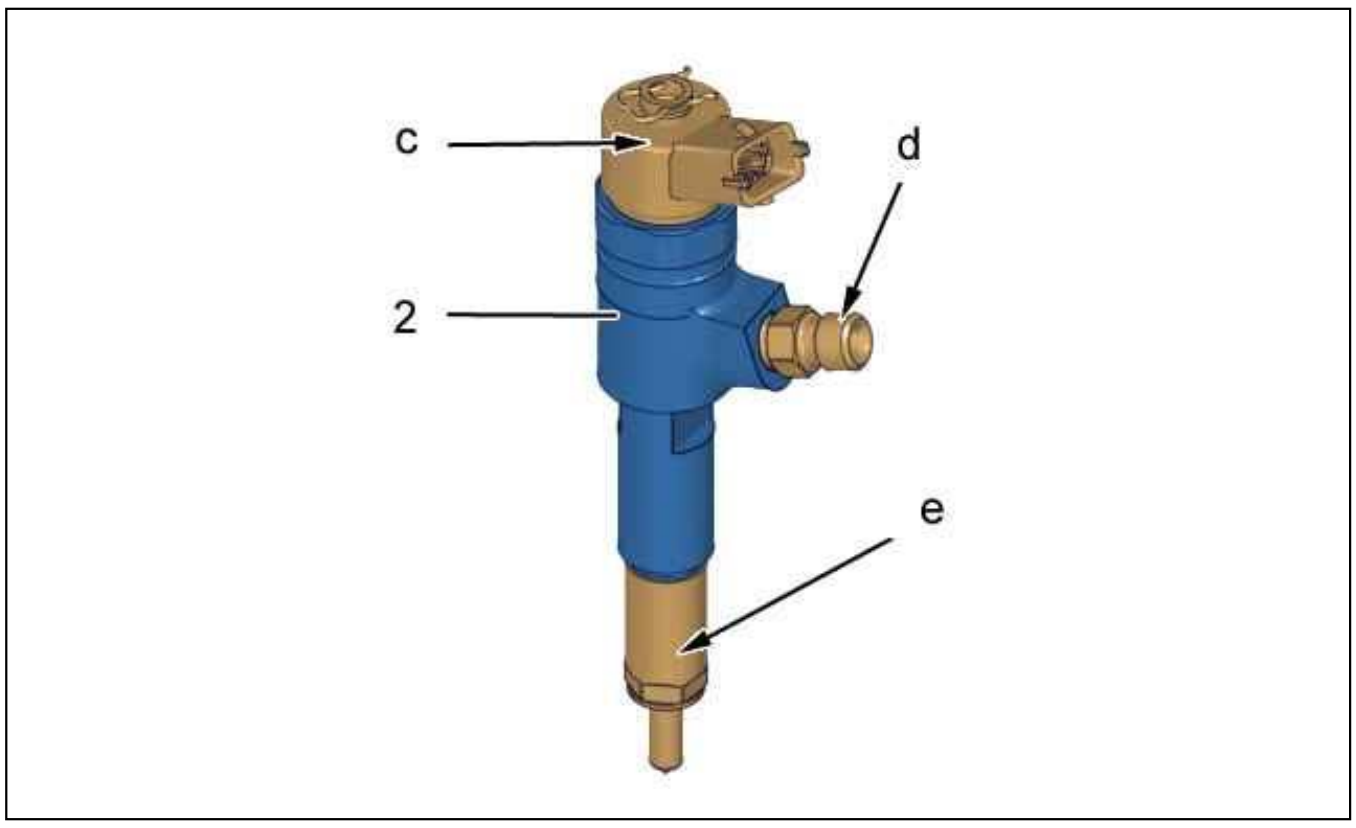

Figure : B1BK3YQD

Do not separate the diesel injector body (2) from the following components :

- High pressure union (at "d") (malfunction)
- Diesel injector (at "e") (replacement parts not available)
- Electromagnetic element (at "c") (replacement parts not available)

Calamine cleaning on the injector nose is prohibited.

PROHIBITED OPERATIONS : HDI DIRECT INJECTION SYSTEM DENSO

1. Protection

CAUTION : Always plug the apertures straightaway after opening up the fuel circuit ; Using the specific plugs kit.

2. Cleaning

CAUTION : The use of a "high pressure" cleaner is prohibited.

CAUTION : Do not use compressed air.

3. Fuel supply system

Recommended fuel : Diesel.

CAUTION : Do not use fuel other than diesel (Risk of destruction of the injection system and of the engine.

CAUTION : The addition of additives, such as fuel circuit cleaners/remetallisers, is forbidden.

4. Electrical circuit

Switching an injection ECU from one vehicle to another will make it impossible to start either vehicle.

CAUTION : Do not supply a diesel injector with 12 volts.

5. Fuel high pressure pump

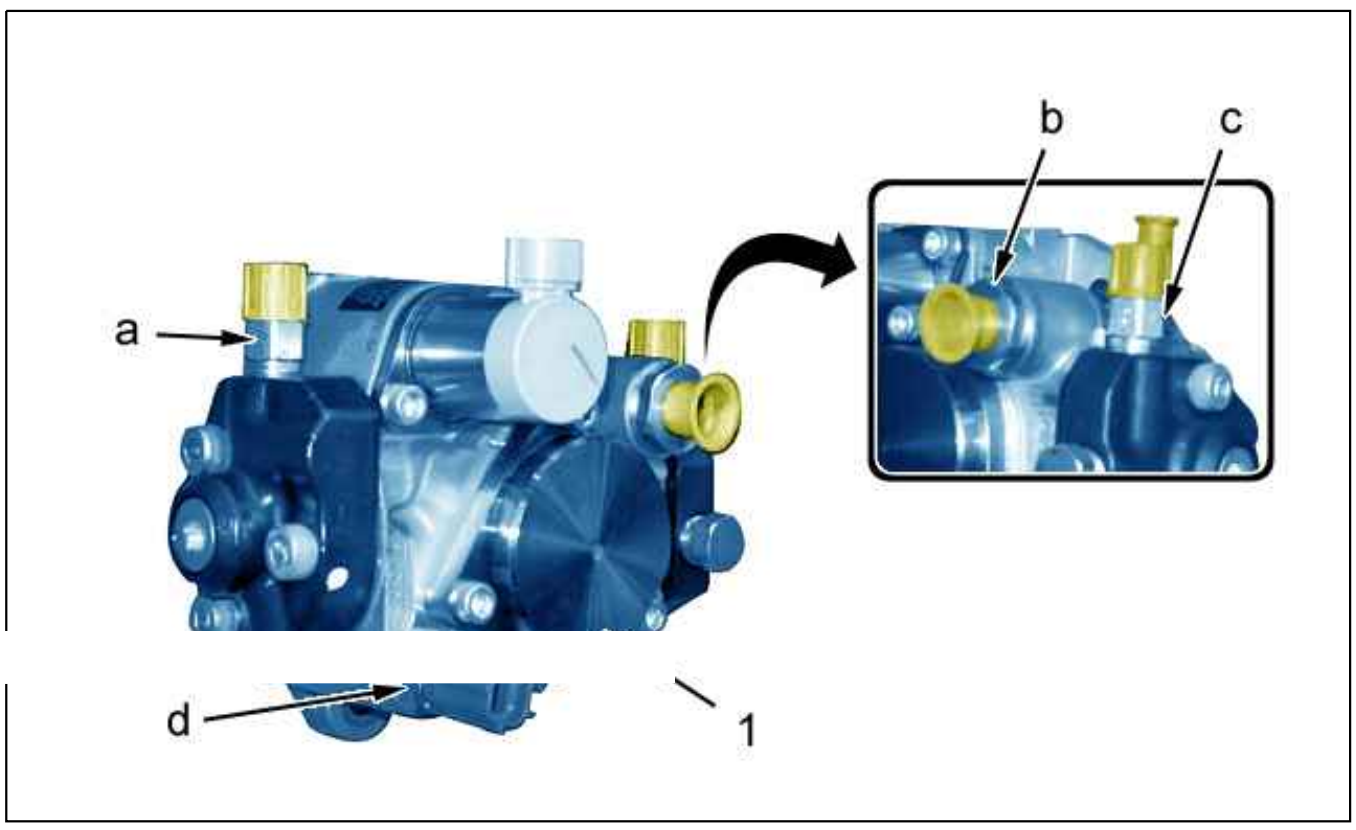

Figure : B1BK3YJD

Do not separate the following components from the high pressure fuel pump (1) :

- The high pressure outlet unions "a" and "c" (malfunction)
- The fuel supply union "b" (Malfunction)
- The fuel temperature sensor "d" (replacement parts not available)

6. Fuel high pressure common injection rail

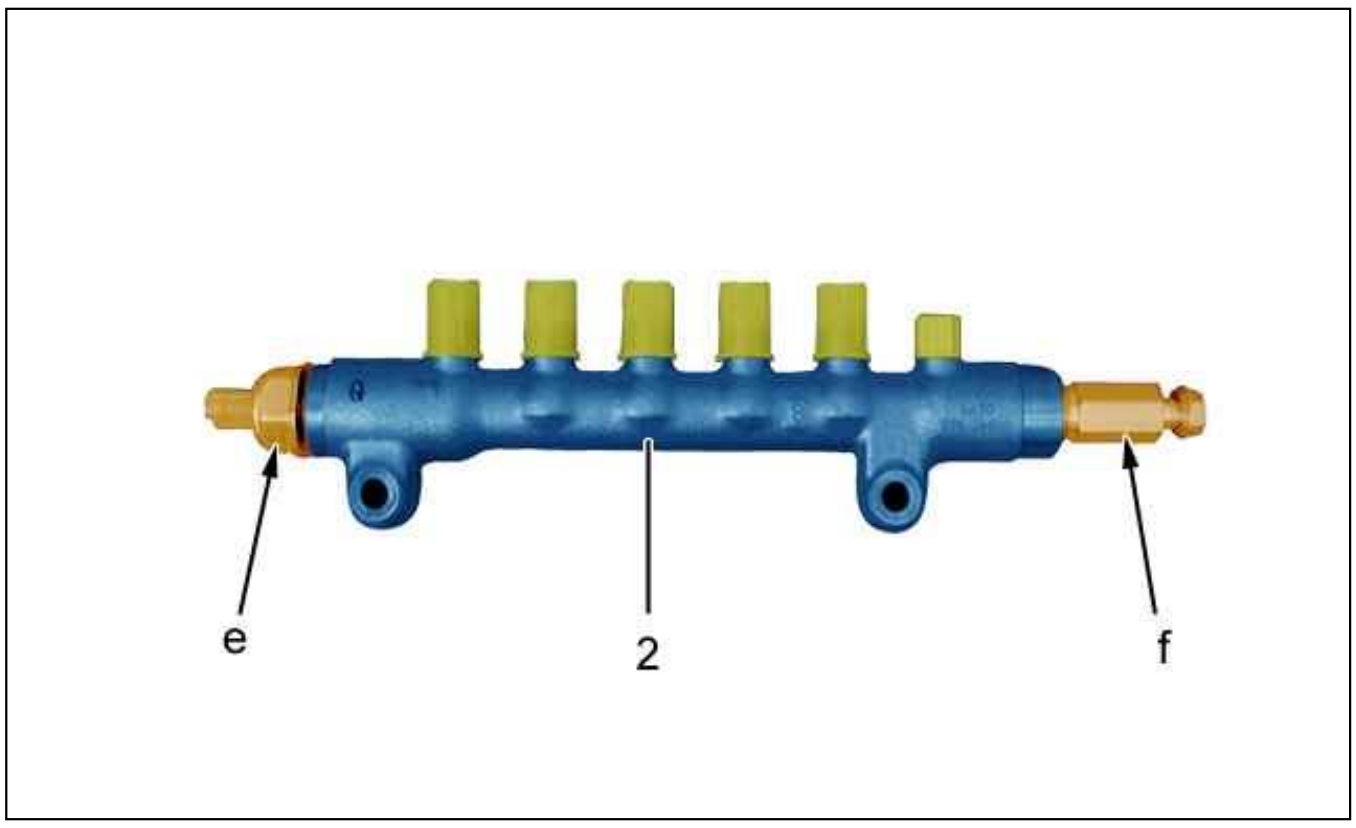

Figure : B1BK3YKD

Do not separate the following components from the fuel high pressure common injection rail (2) :

- The pressure sensor "e" (replacement parts not available)
- The pressure regulator "f" (replacement parts not available)

7. Diesel injector

CAUTION : Cleaning operations using diesel and ultrasound are prohibited.

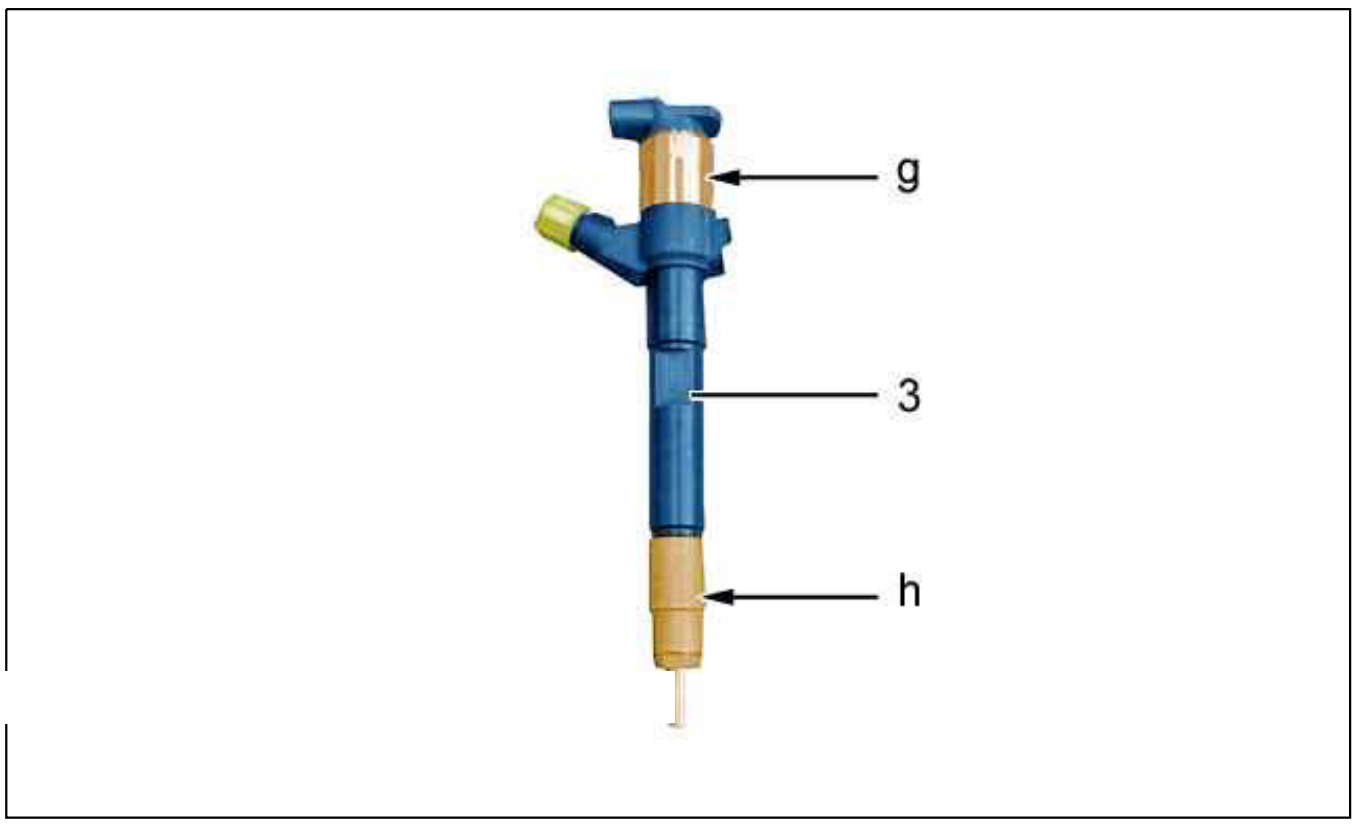

Figure : B1BK3YLD

Do not separate the following components from the diesel injector carrier (3) :

- Electromagnetic element "g" (replacement parts not available)
- Diesel injector "h" (replacement parts not available)

CAUTION : Calamine cleaning on the injector nose is prohibited.

PROHIBITED OPERATIONS : PETROL DIRECT INJECTION SYSTEM THP

1. Cleaning

The use of a "high pressure" cleaner is prohibited.
Do not use compressed air.

2. Fuel supply system

Recommended fuel : Unleaded petrol.

3. Electrical circuit

Swapping of engine ECUs between two vehicles makes it impossible to start either vehicle.
It is forbidden to supply either one or all of the injectors with 12 volts.

4. high pressure fuel pump

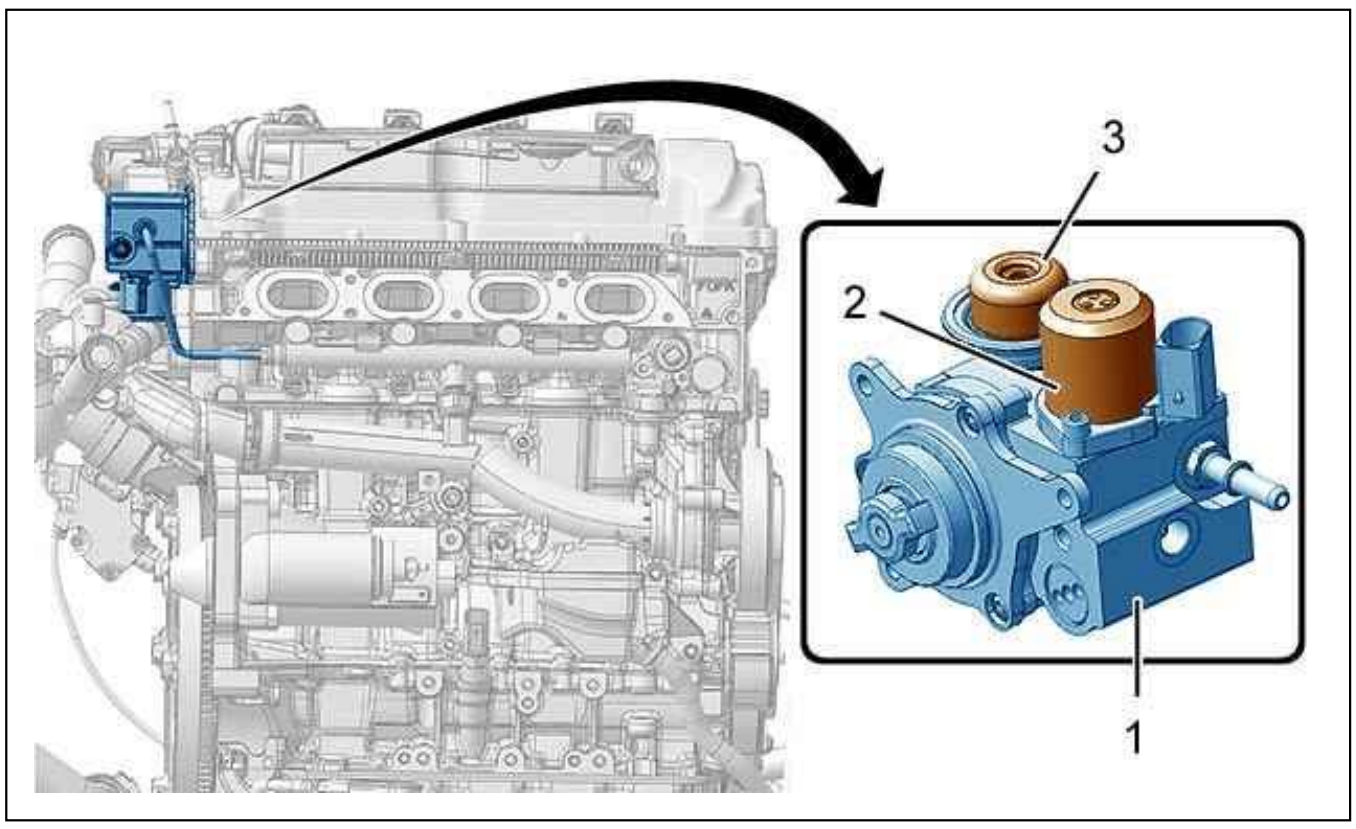

Figure : B1BK3XBD

Heating unit (1) :

- Fuel high pressure regulation electrovalve (2) ; (No replacement parts)
- Oil excess pressure valve (3) ; (No replacement parts)

PROHIBITED OPERATIONS : HDI DIRECT INJECTION SYSTEM CONTINENTAL-SIEMENS

1. Protection

CAUTION : Always plug the apertures straightaway after opening up the fuel circuit ; Using the specific plugs kit.

2. Cleaning

CAUTION : The use of a "high pressure" cleaner is prohibited.

CAUTION : Do not use compressed air.

3. Fuel supply system

Recommended fuel : Diesel.

CAUTION : Do not use fuel other than diesel (Risk of destruction of the injection system and of the engine.

CAUTION : The addition of additives, such as fuel circuit cleaners/remetallisers, is forbidden.

4. Electrical circuit

Switching an injection ECU from one vehicle to another will make it impossible to start either vehicle.

CAUTION : Do not supply a diesel injector with 12 volts.

5. high pressure fuel pump

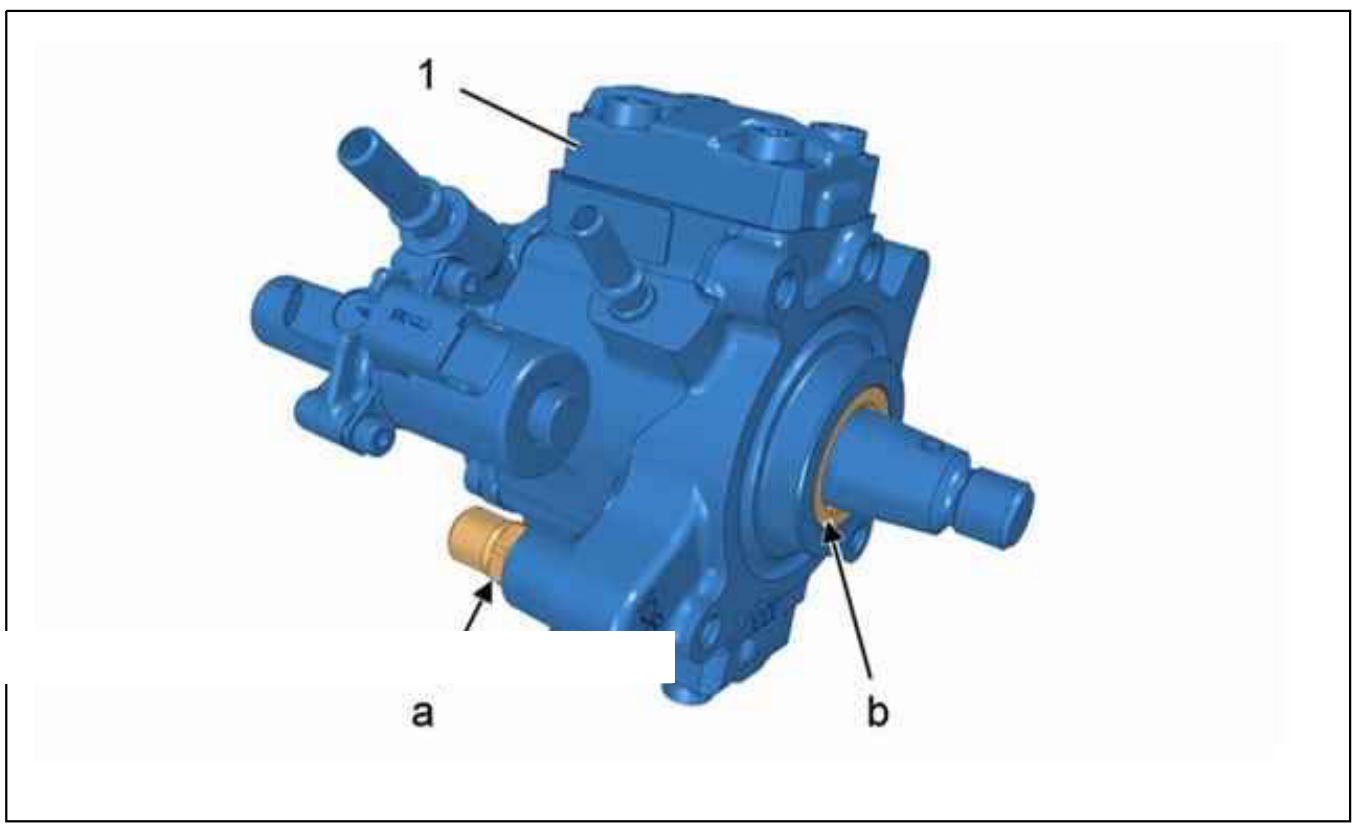

Figure : B1BK3XMD

Do not separate the following components from the fuel high pressure pump (1) :

- High pressure outlet union "a" (malfunction)
- Sealing ring "b" (replacement parts not available)

6. Diesel injector

CAUTION : Cleaning operations using diesel and ultrasound are prohibited.

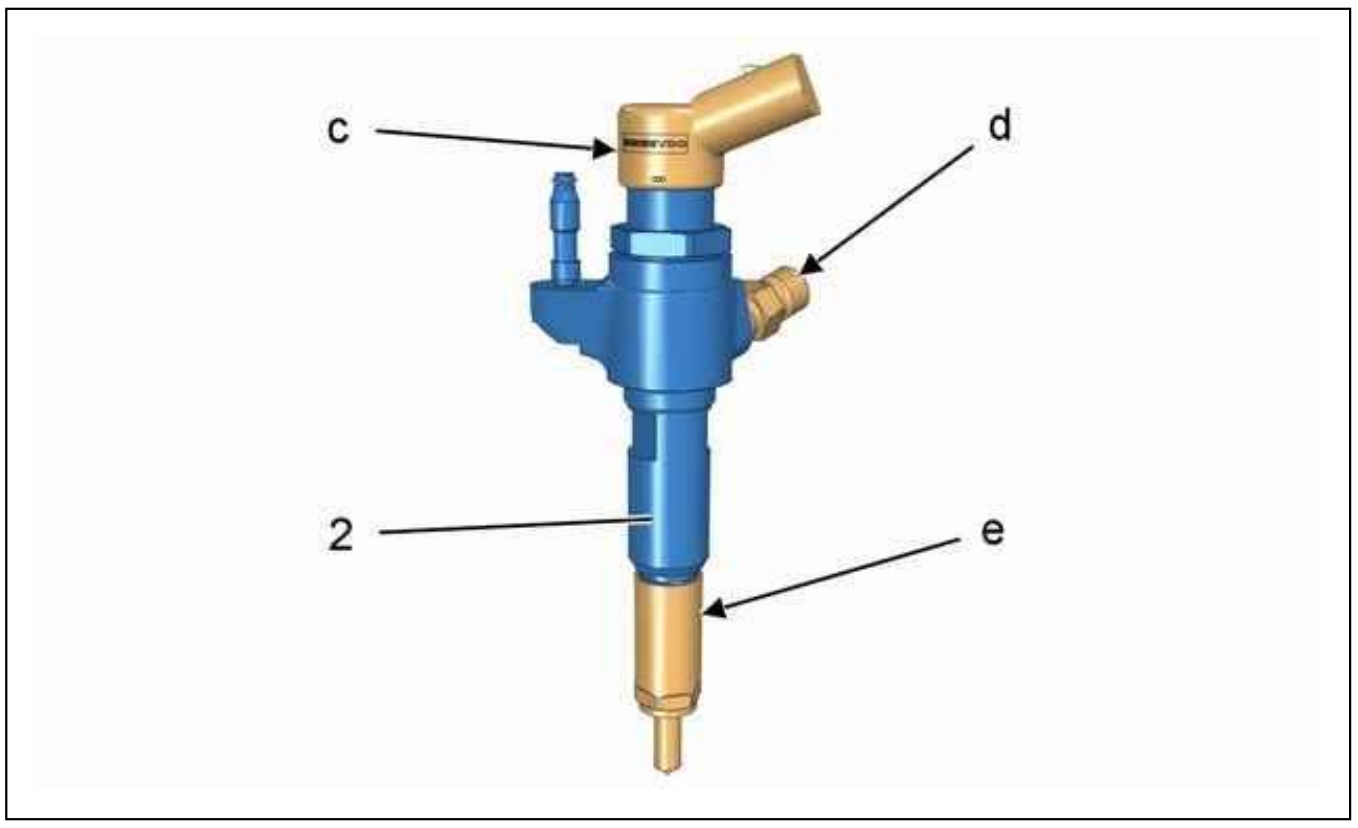

Figure : B1BK3XND

Do not separate the diesel injector body (2) from the following components :

- Electromagnetic element "c" (replacement parts not available)
- High pressure union "d" (malfunction)
- Diesel injector "e" (replacement parts not available)

Calamine cleaning on the injector nose is prohibited.

FITTING : ENGINE ON STAND

1. Recommended tools

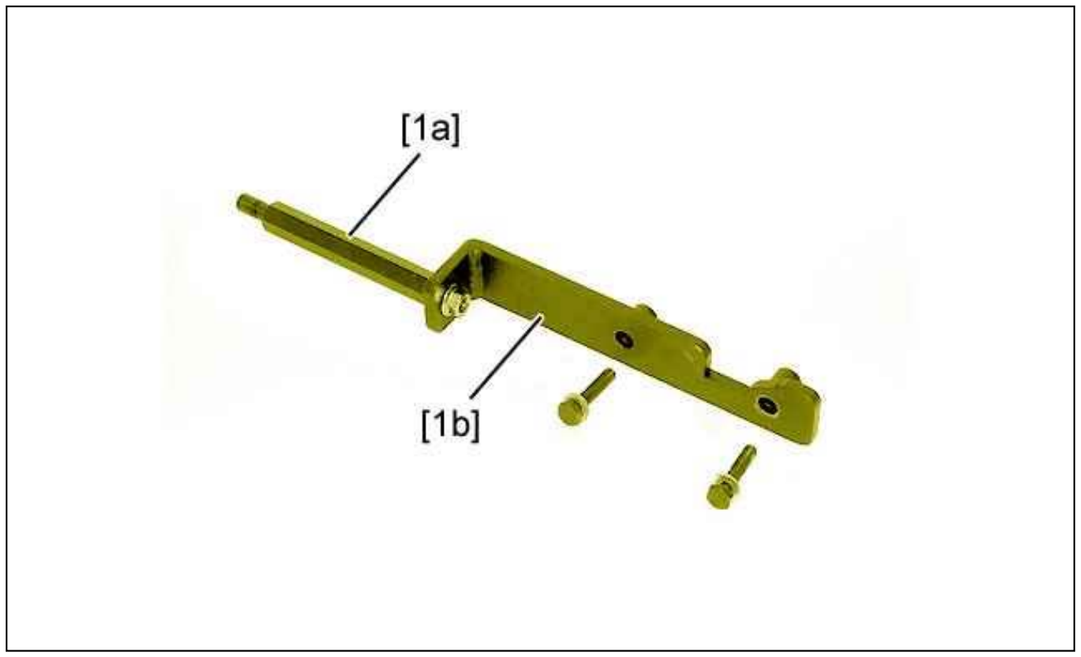

Figure : E5AM066D

[1a] Engine mounting mandrel G.0013/2C.
[1b] engine support G.0013/2B (Turbocharger side).

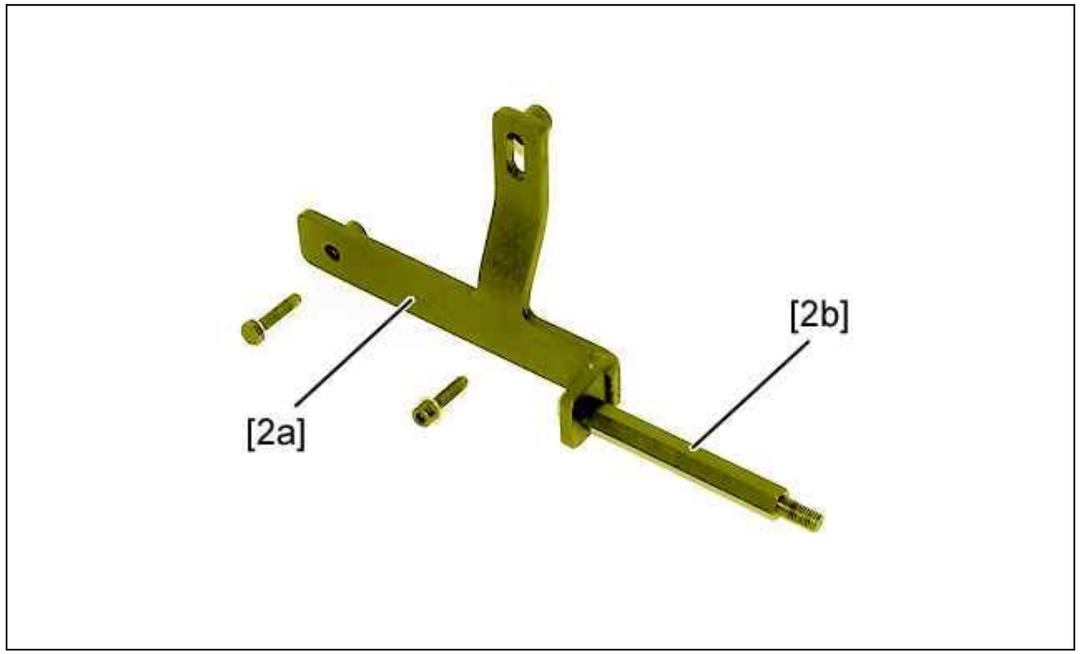

Figure : E5AM067D

[2a] engine support G.0013/2A (Oil filter side).
[2b] Engine mounting mandrel G.0013/2C.

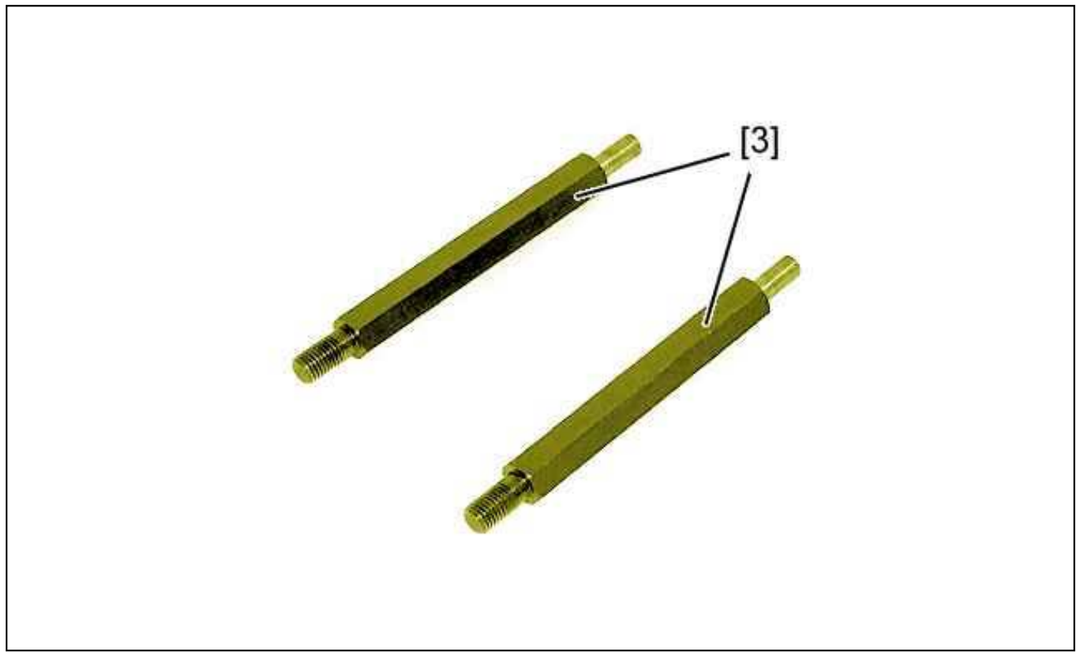

Figure : E5AM068D

[3] mandrel G.0013/2C.

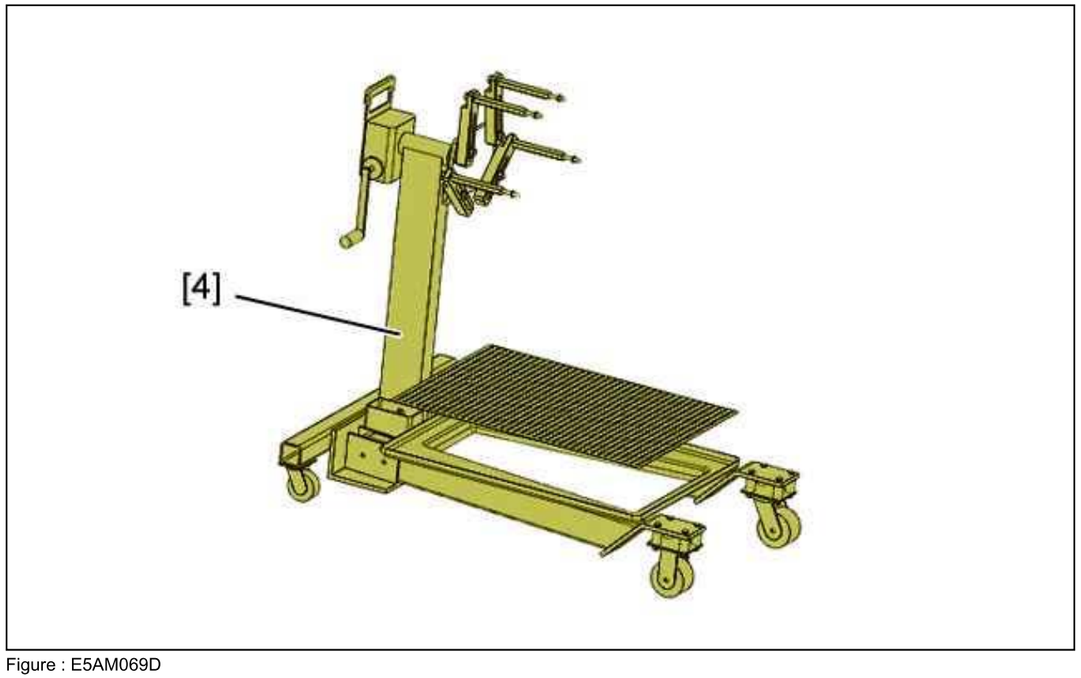

Figure : E5AM069D

[4] engine support cradle (-).0013.

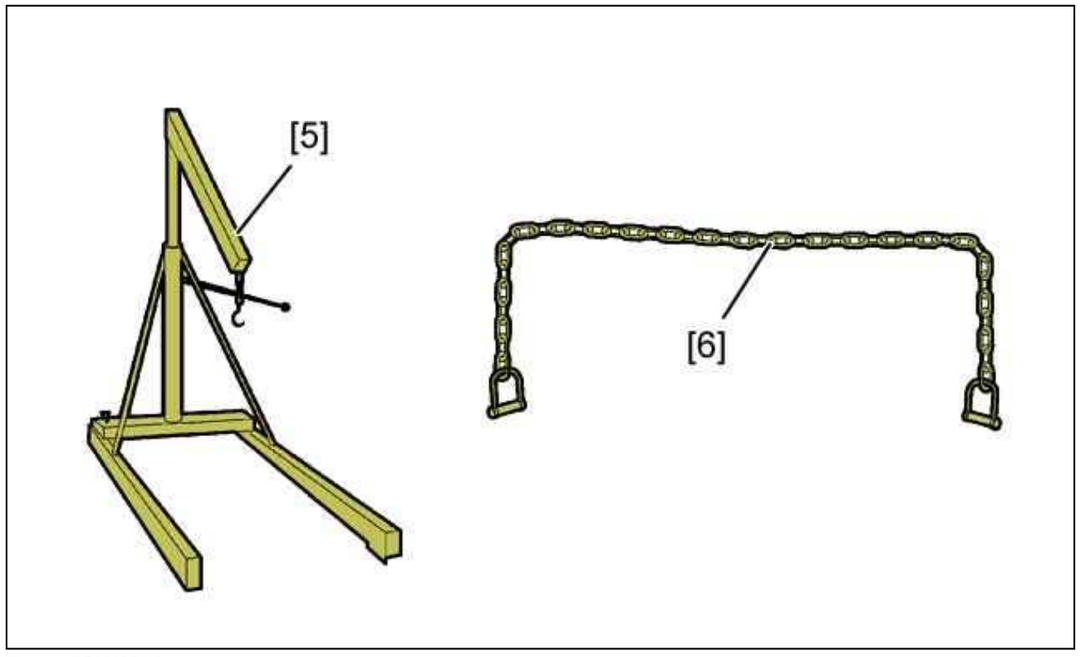

Figure : E5AM06AD

[5] workshop hoist.
[6] Lifting chain .

2. Preliminary operations

Support the engine using a workshop crane [5] ; Using tool [6].
Remove : The engine brackets .

3. Fitting the engine to the stand

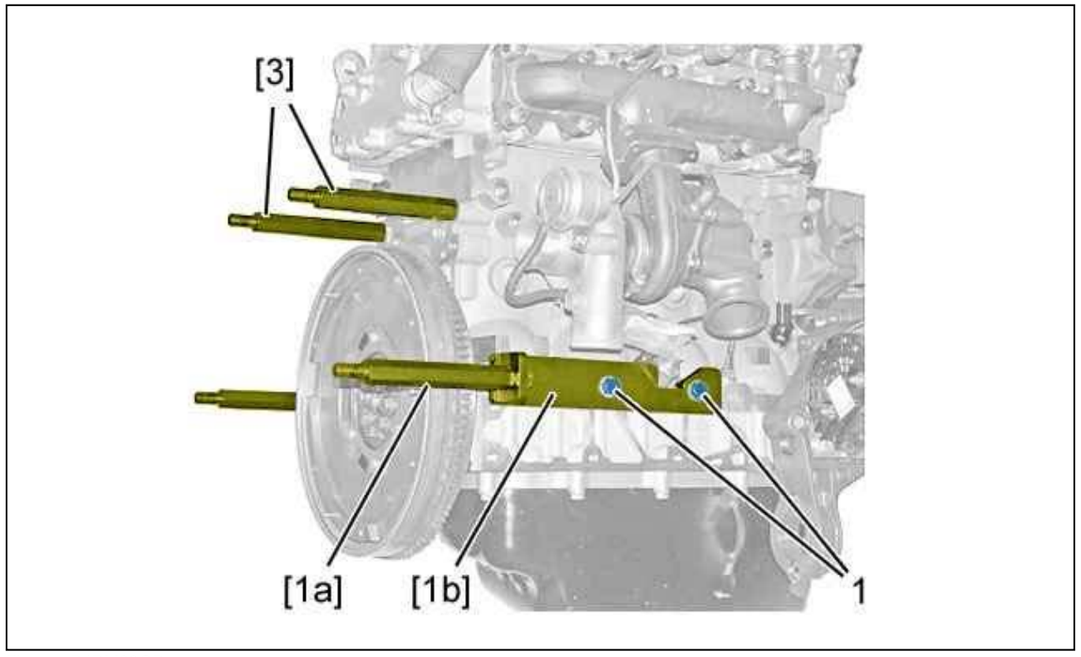

Figure : B1BM09GD

Fit :

- The mandrels [3]
- The engine mounting [1b]
- The bolts (1)
- The engine mounting mandrel [1a]

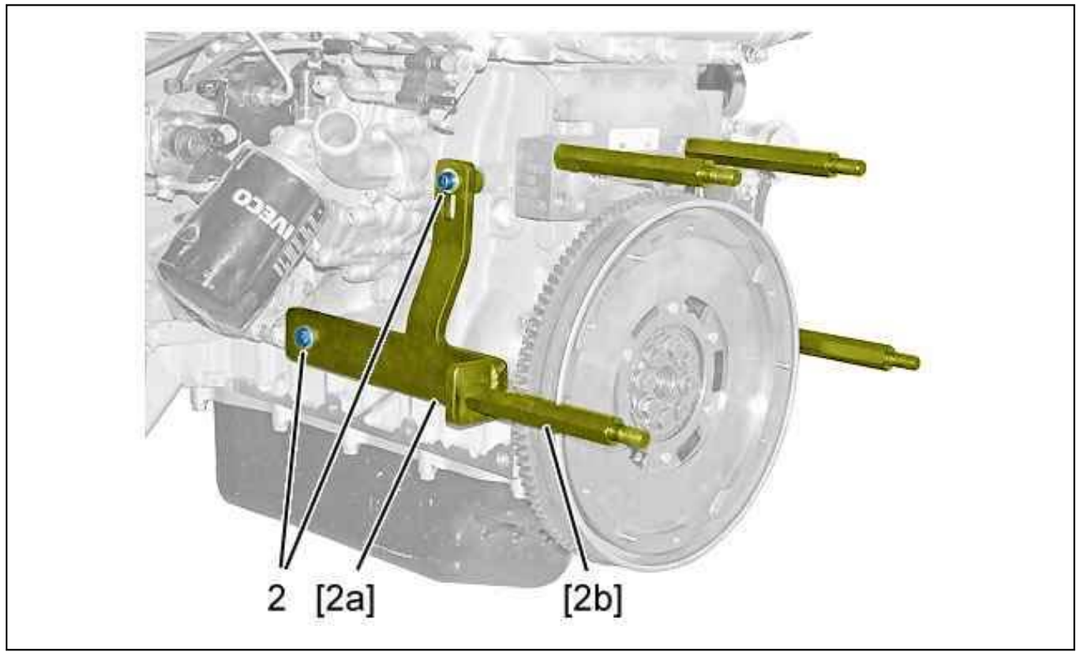

Figure : B1BM09HD

Fit :

- The engine mounting [2a]
- The bolts (2)
- The engine mounting mandrel [2b]

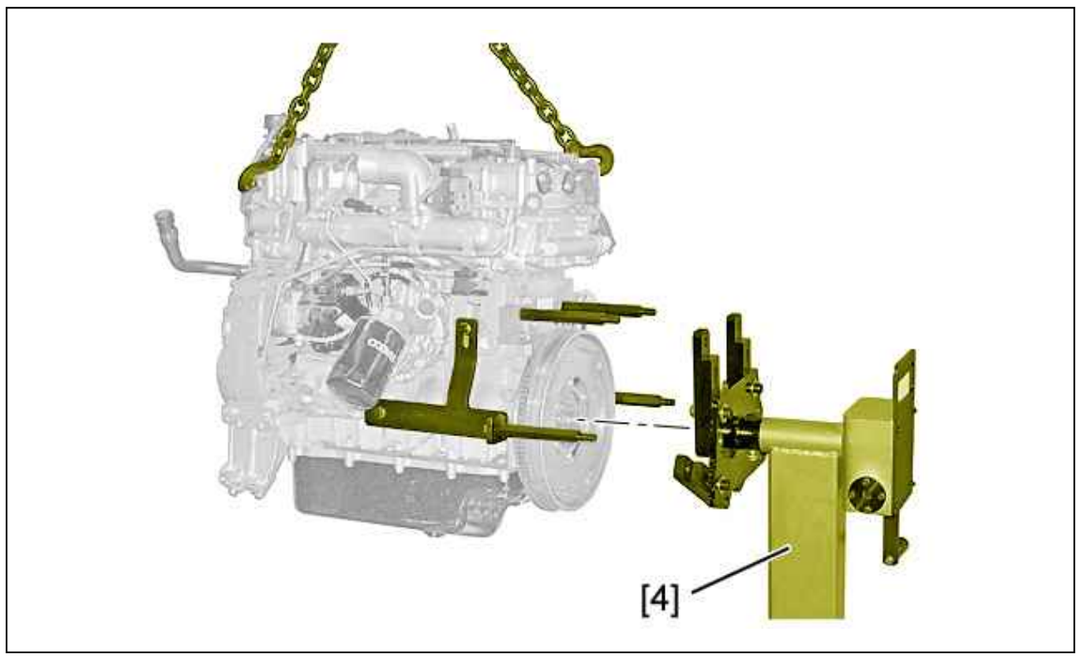

Figure : B1BM09JD

CAUTION : Line up the centreline of the crankshaft and the centreline of the stand [4].

Place the engine on a stand ; Using the tools [5], [6].

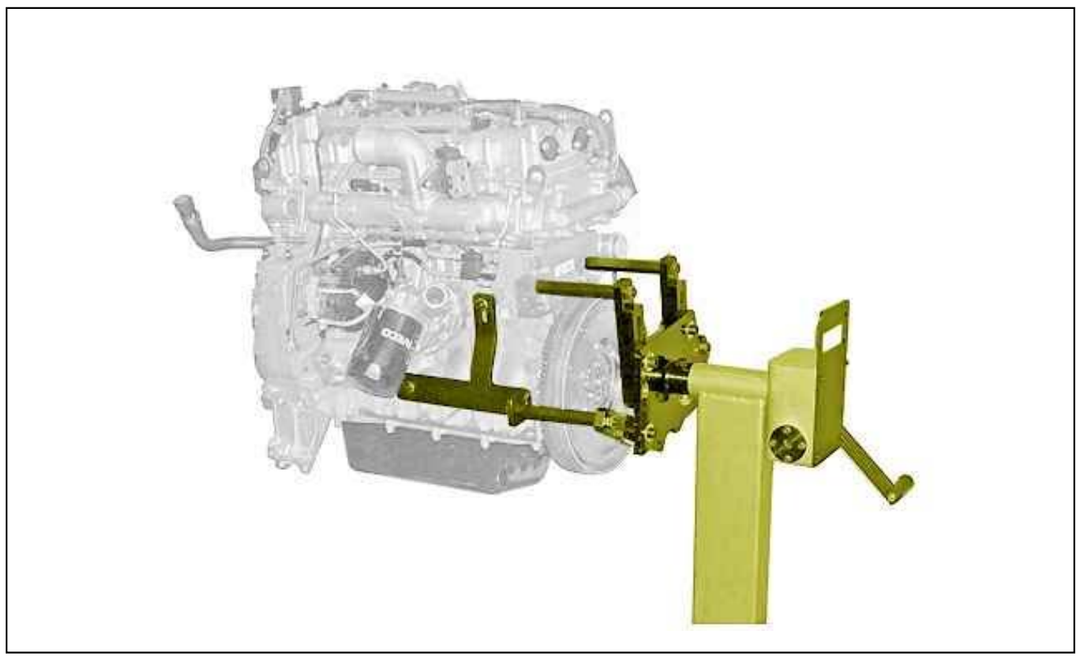

Figure : B1BM09KD

Detach the workshop crane from the engine.

STRIPPING-ASSEMBLING : CYLINDER HEAD -CYLINDER HEAD COVER

1. Recommended tools

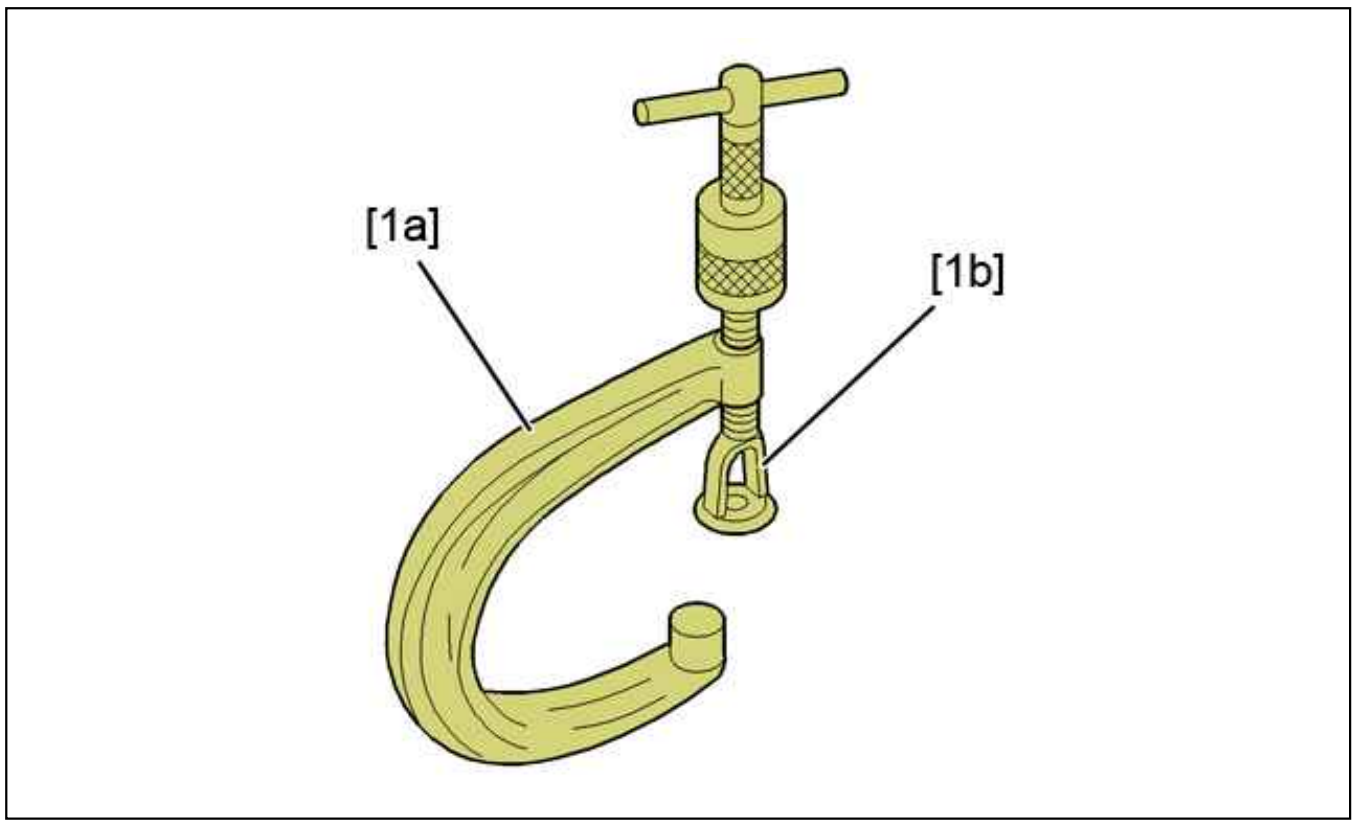

Figure : E5AP2VLD

Reference	Designation	Reference
[1a]	Valve spring compressor	FACOM U43LA
[1b]	Cup	FACOM U43LA16-21

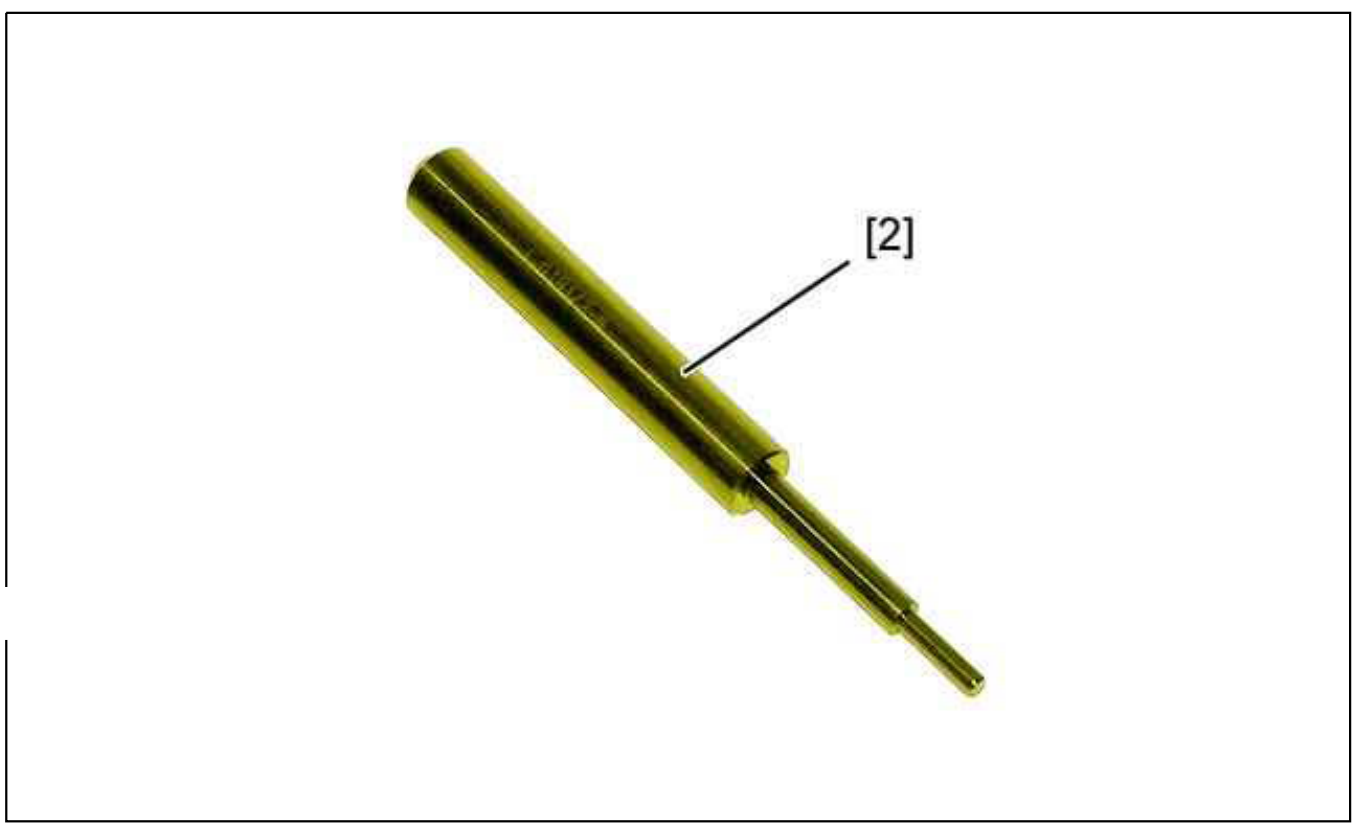

Figure : E5AM002D

Reference	Designation	Reference
[2]	Valve guide extraction tool	(-).0191/2.N

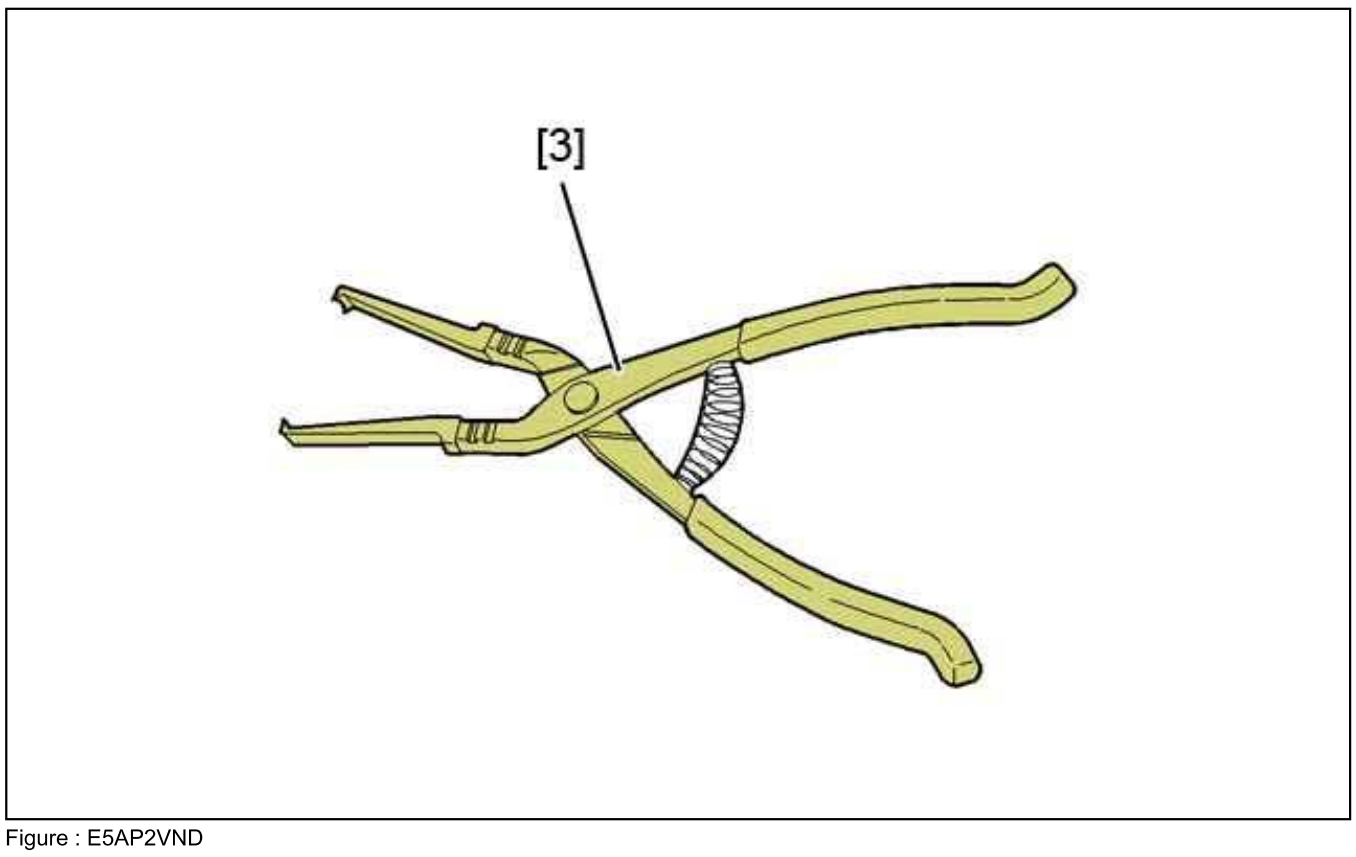

Figure : E5AP2VND

Reference	Designation	Reference
[3]	pliers for removing the valve stem seals (/)	(-).0170.A

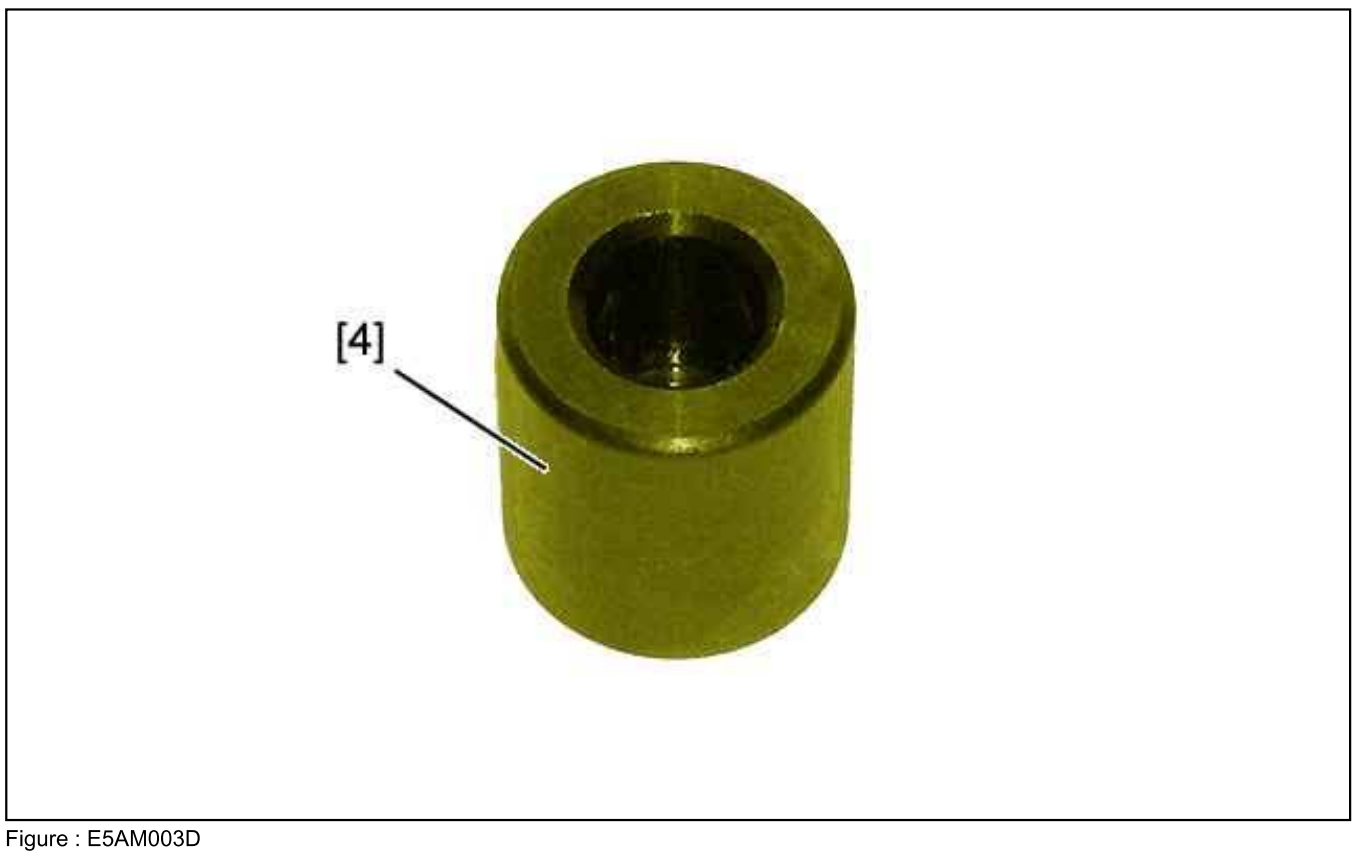

Figure : E5AM003D

Reference	Designation	Reference

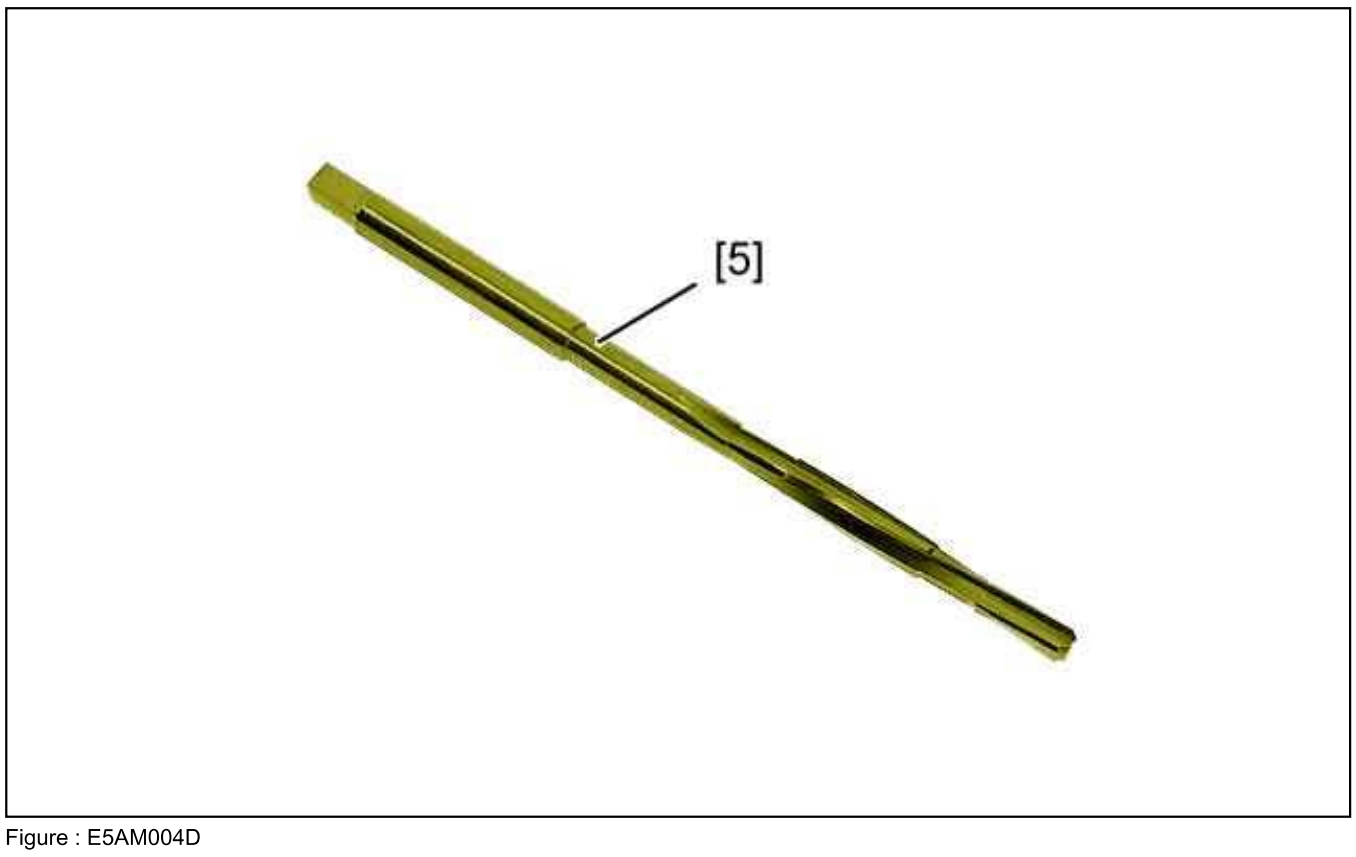

Figure : E5AM004D

Reference	Designation	Reference
[5]	Valve guide honer	(-).0191/2.P

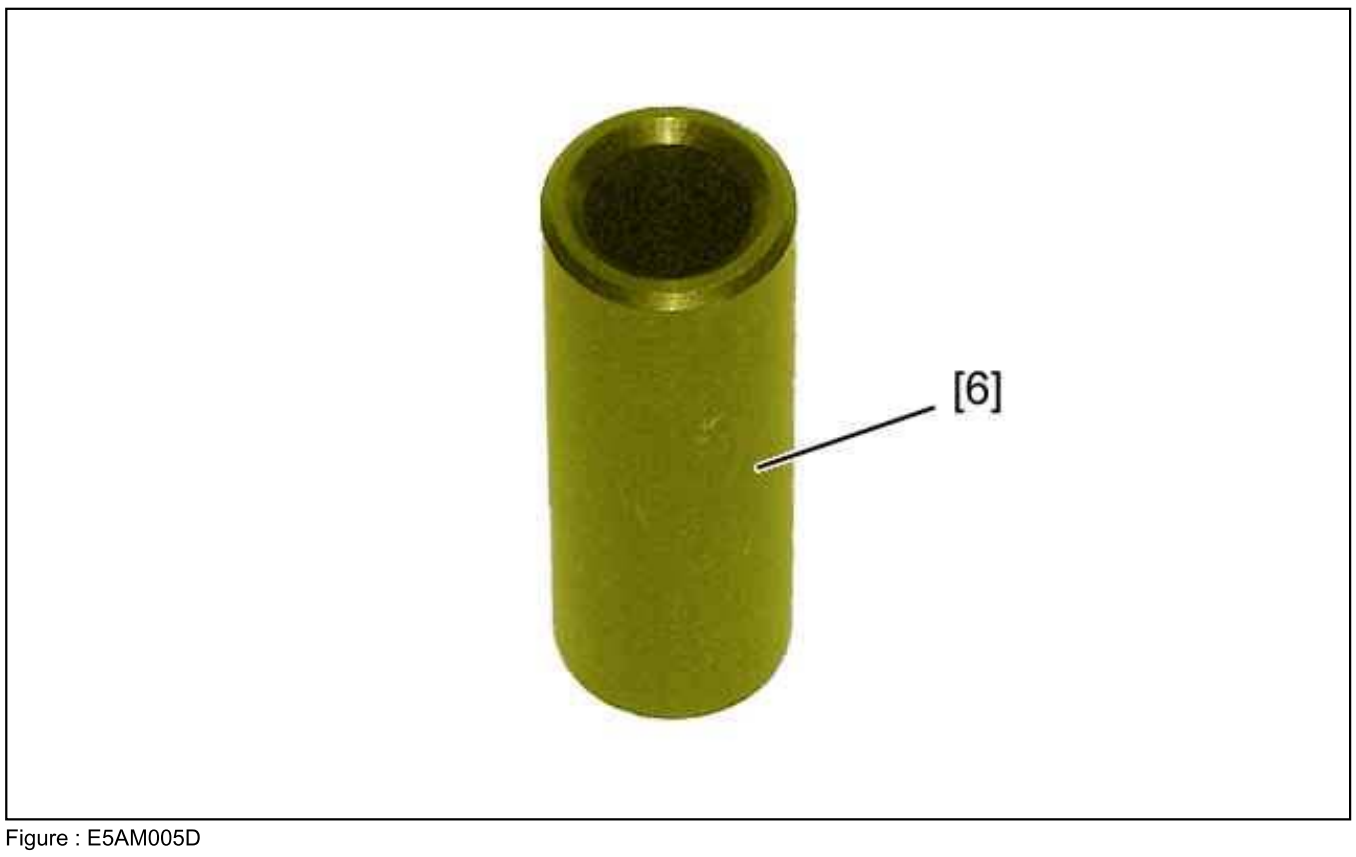

Figure : E5AM005D

Reference	Designation	Reference
[6]	valve stem seal fitting tool	(-).0191/2.Q

2. Stripping

2.1. Cylinder head

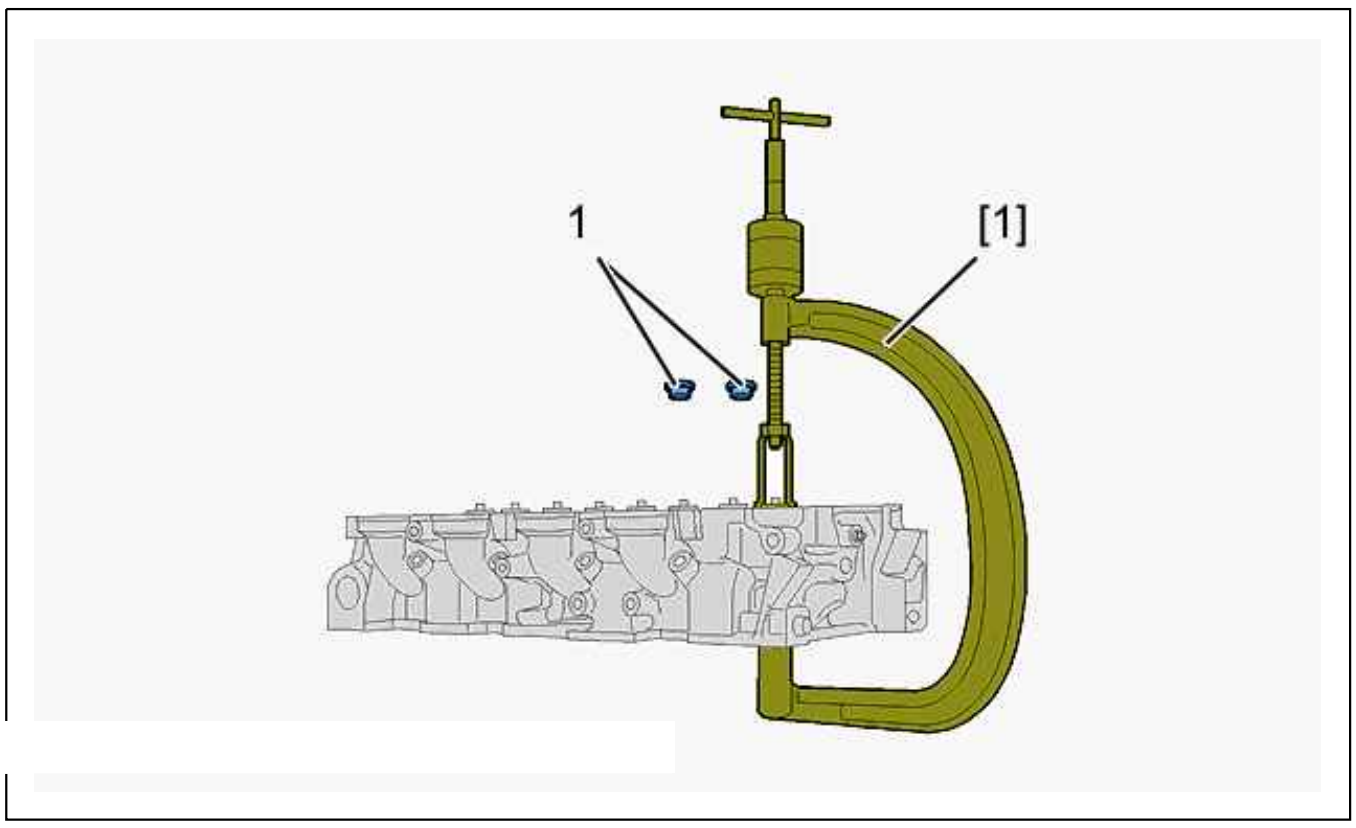

Figure : B1DM003D

Fit the tool [1].
Compress the valve springs ;Using tool [1].
Remove :

- Collets (1)
- The cups
- The valve springs
- The valves

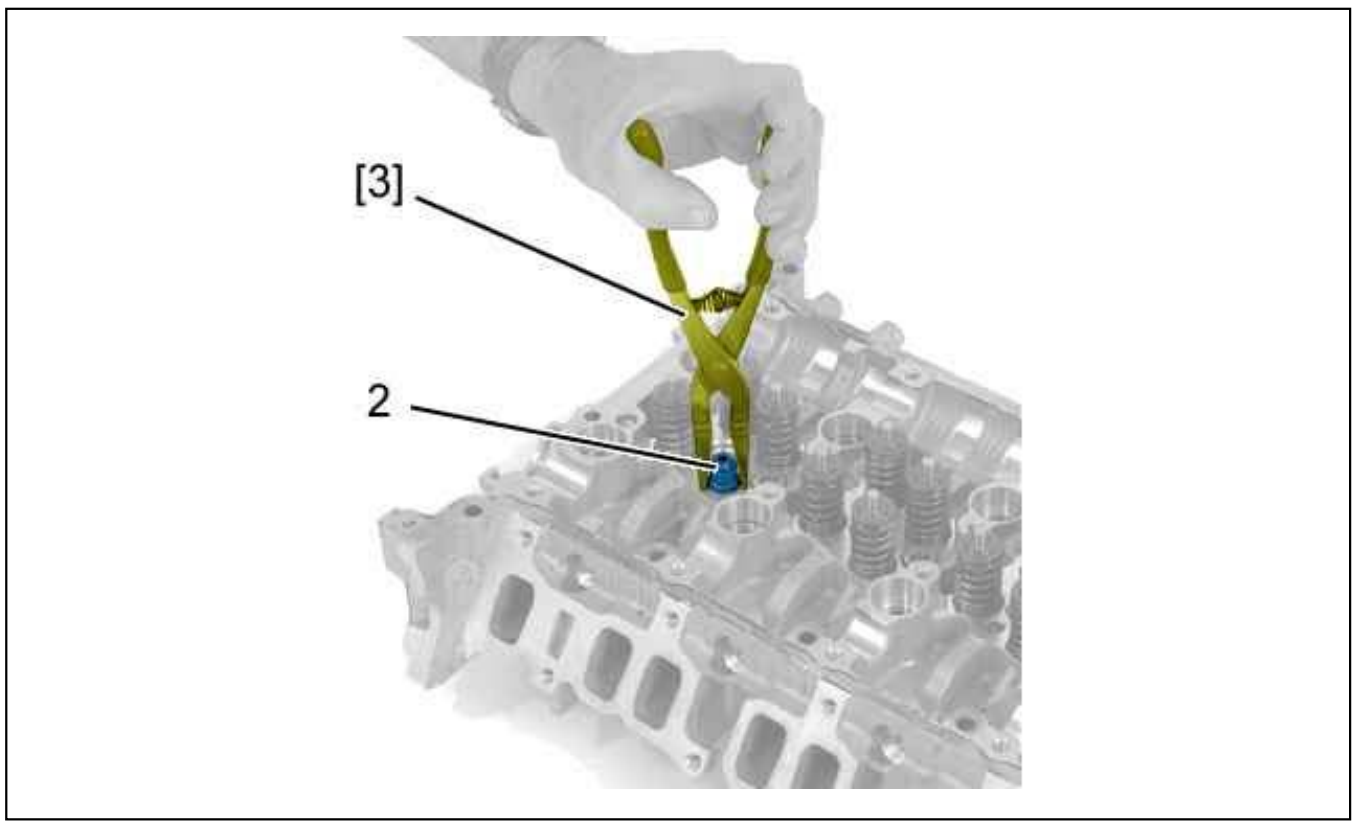

Figure : B1DM004D

Remove :

- The valve stem seals (2); Using tool [3]
- The valve guides ; Using tool [2]

2.2. Cylinder head cover

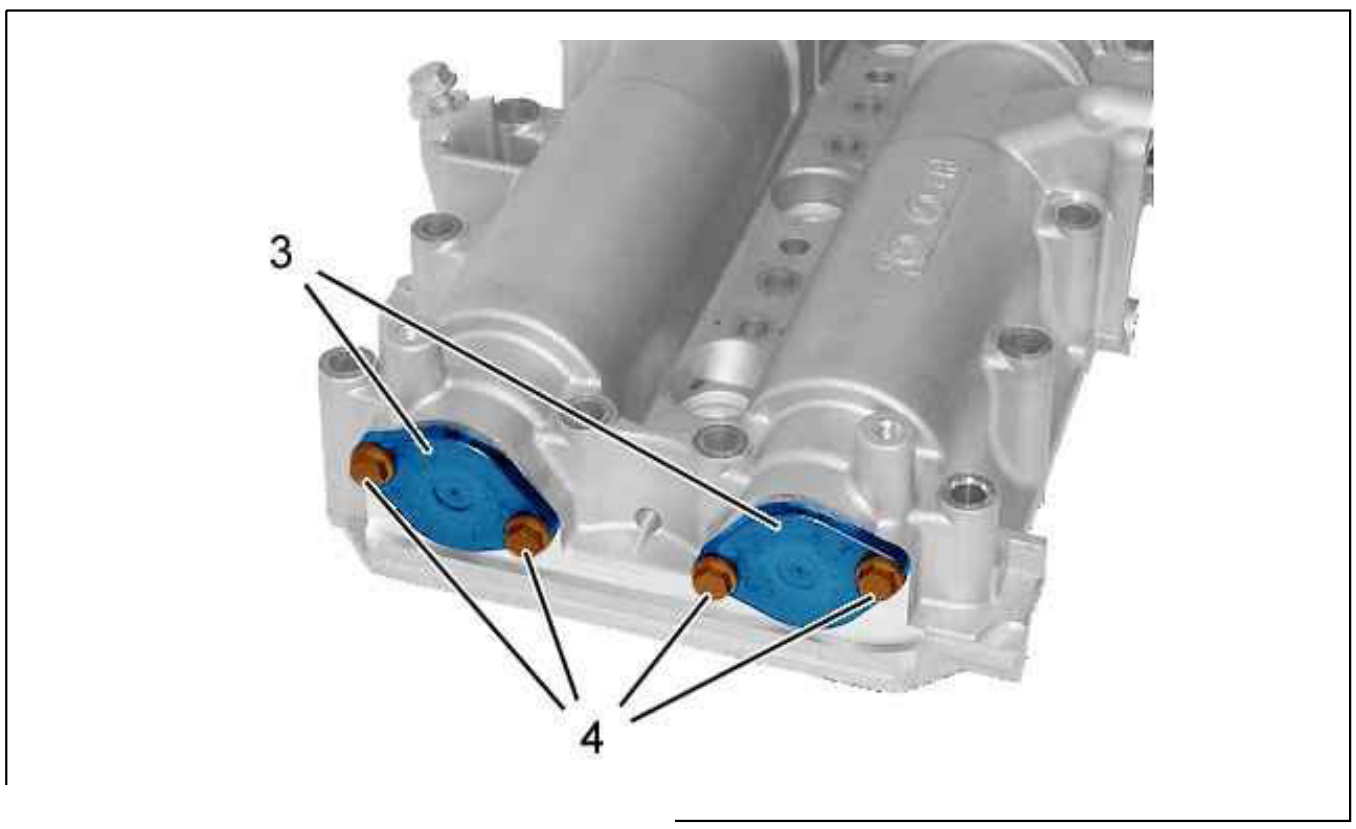

Figure : B1DM005D

Remove :

- The bolts (4)
- The plugs (3) and their seals

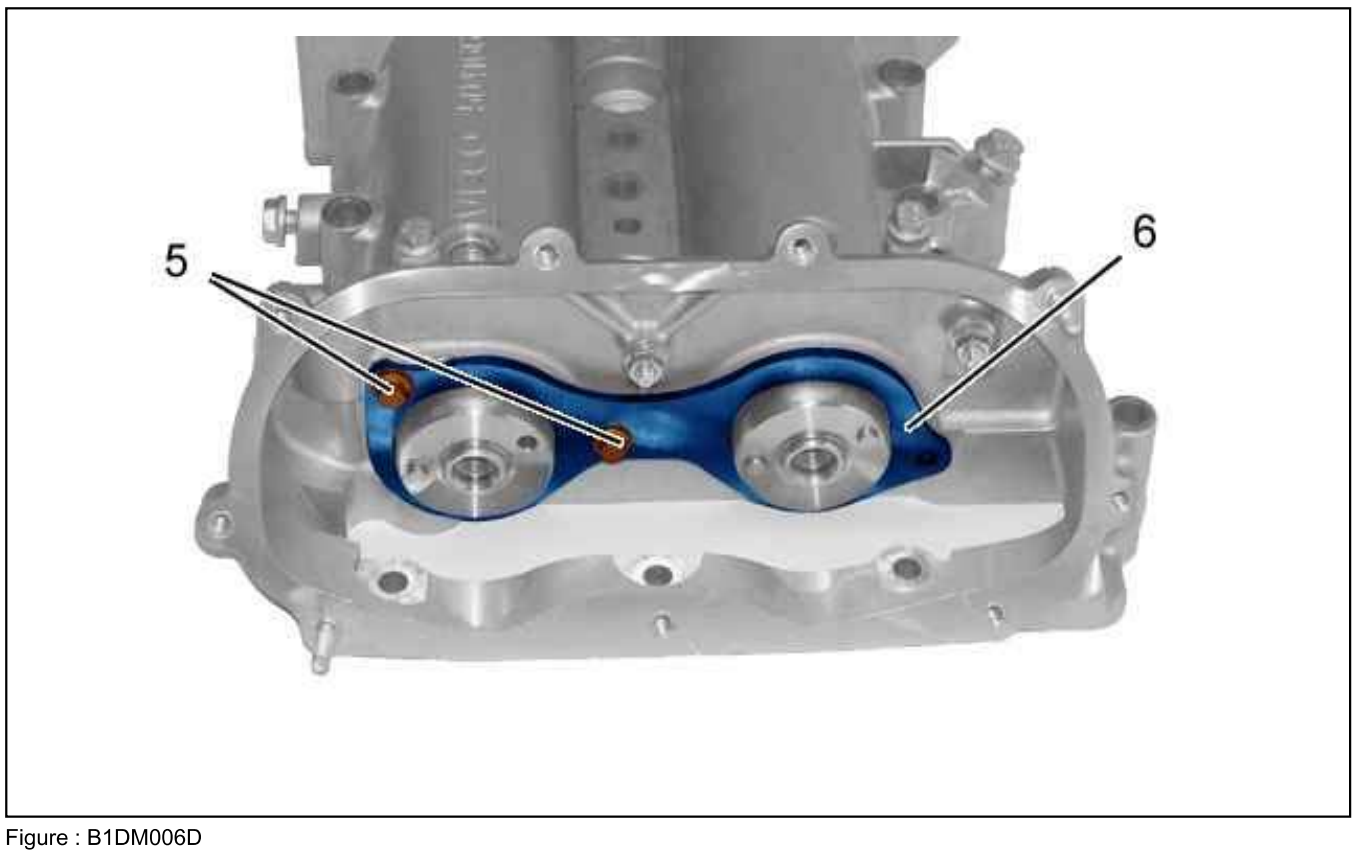

Figure : B1DM006D

Remove :

- The bolts (5)
- The retaining plate (6)

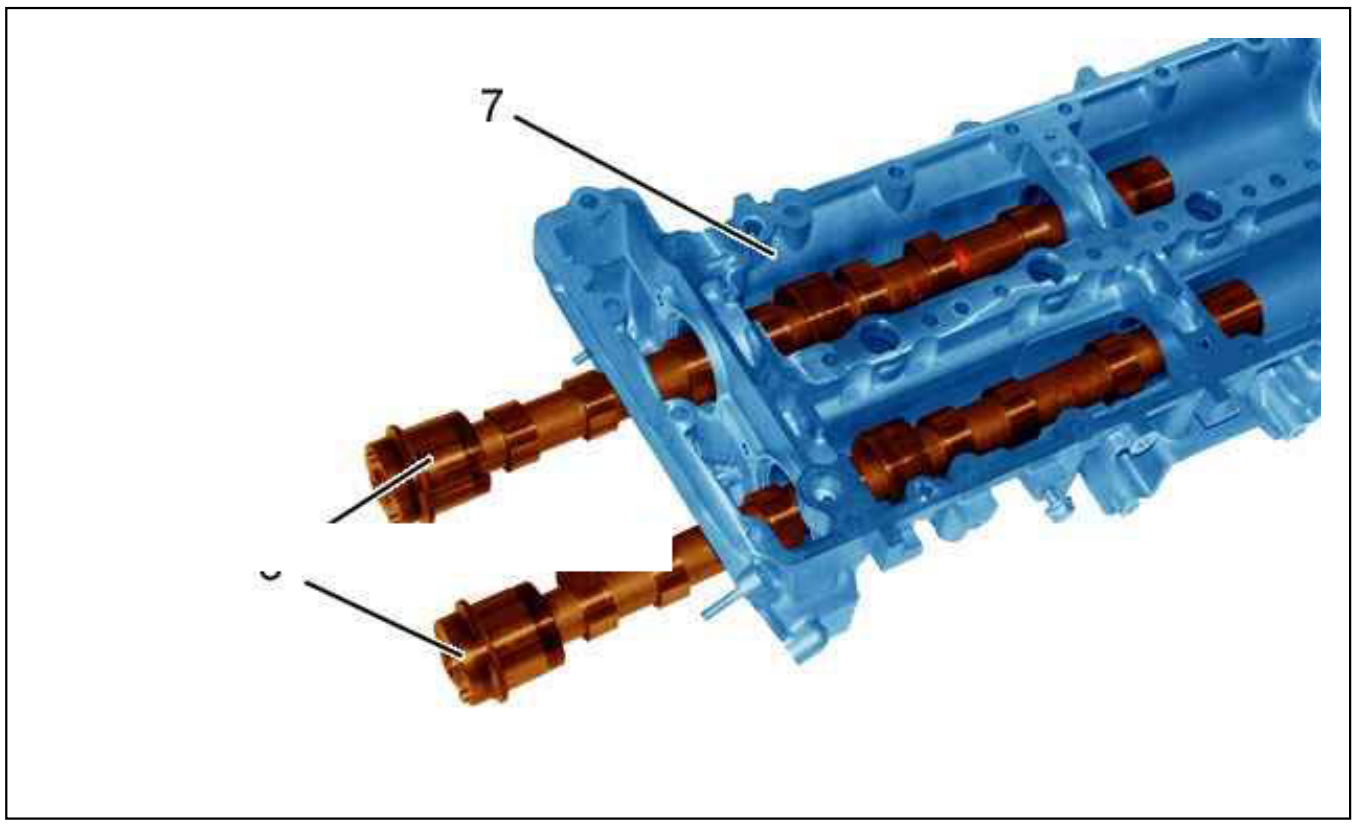

Figure : B1DM007D

CAUTION : Mark the position of the camshafts (8) in the cylinder head cover (7).

Remove the camshafts (8).

3. Re-assembling

3.1. Check

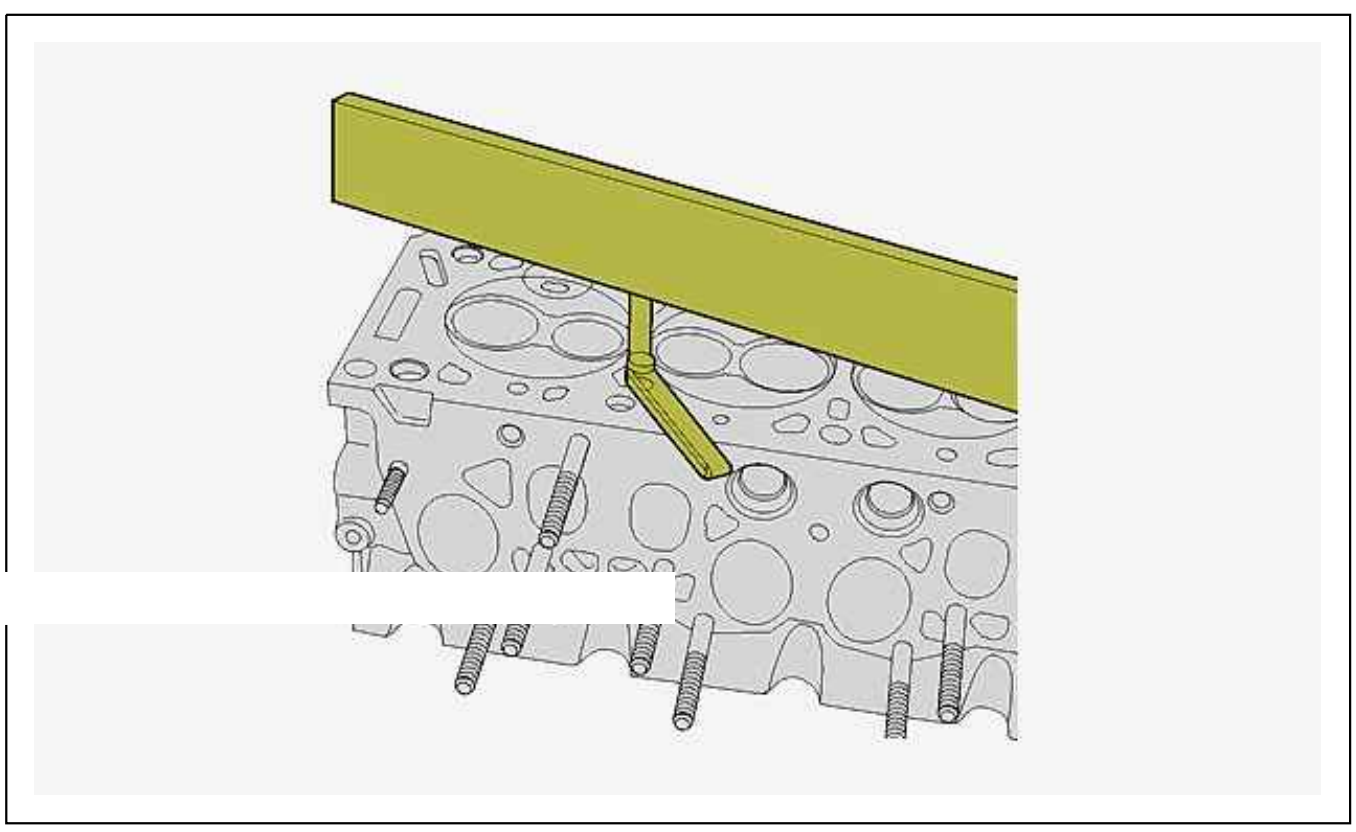

Figure : B1DM008D

Check the flatness of the cylinder head ;Using a block set and a rule .

N.B. : Max. metal removed when refacing : 0,2 mm (max.).

3.2. Cylinder head

Refit : The valve guides ; Using tool [4].
Polish the valve guides ; Using tool [5].

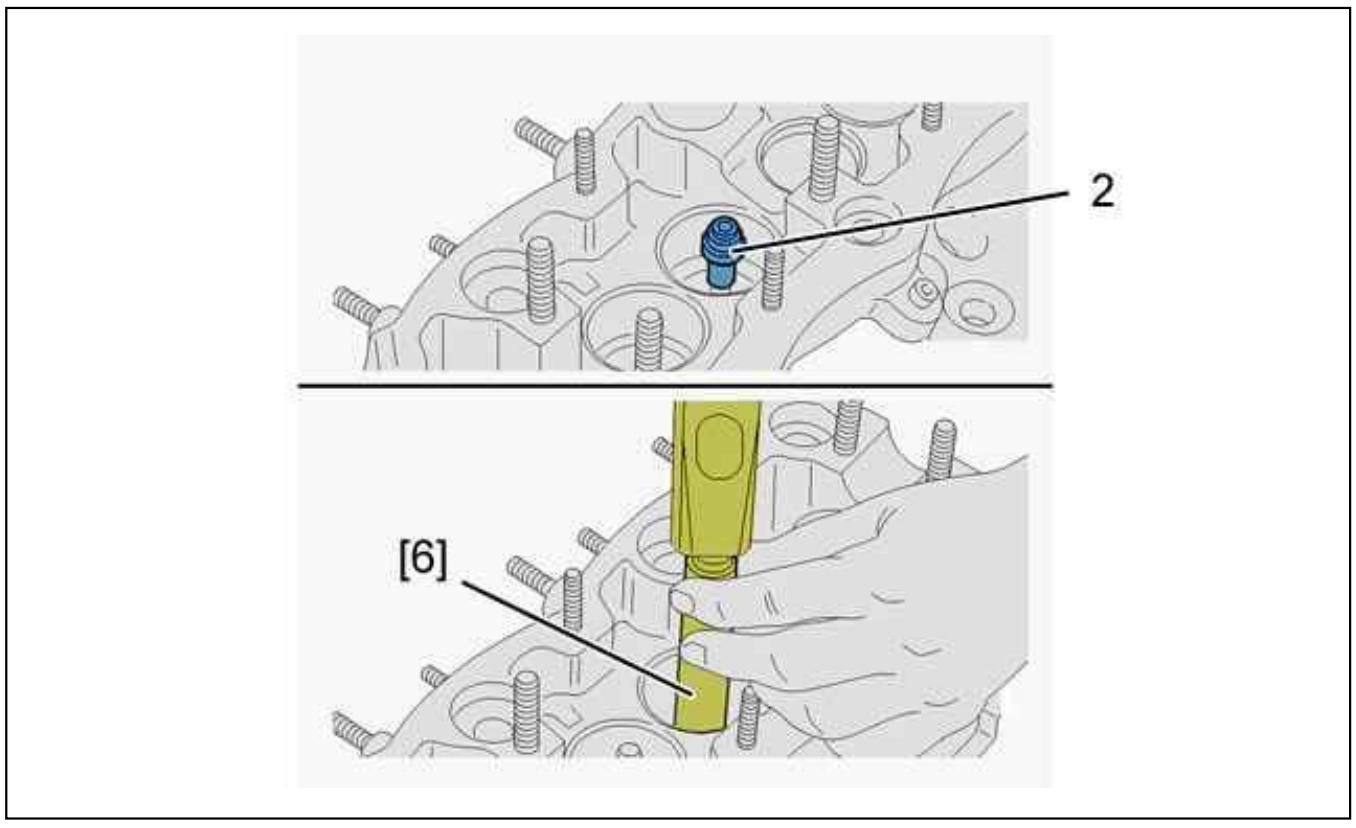

Figure : B1DM009D

Oil the valve stems.
Refit :

- The valves
- The valve stem seals (2); Using tool [6]
- The valve springs
- The cups

Fit the tool [4].
Compress the valve springs ;Using tool [1].
Refit the half cones (1).
Remove the tool [1].

3.3. Cylinder head cover

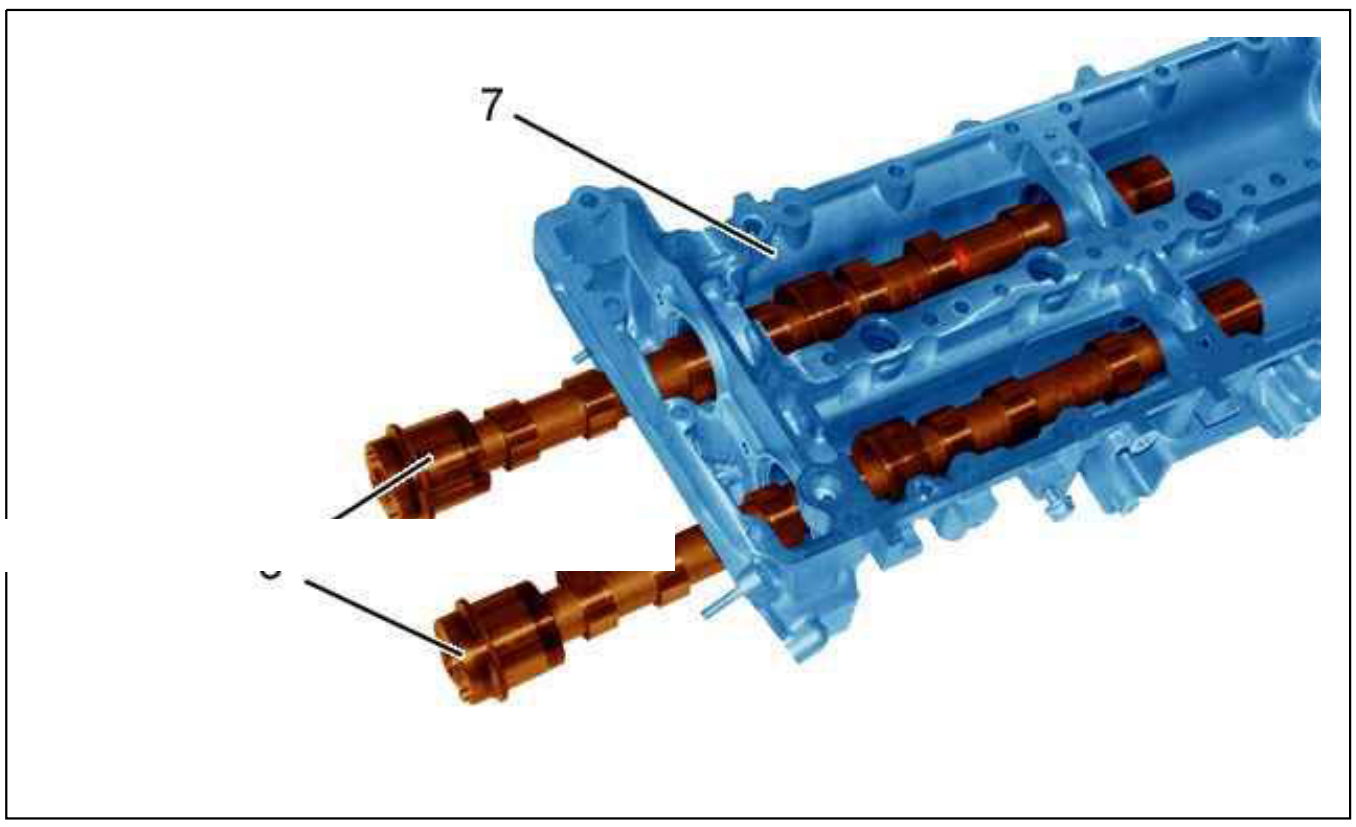

Figure : B1DM007D

CAUTION : Observe the marks made during the dismantling operation.

Refit the camshafts (8) in the cylinder head cover (7).

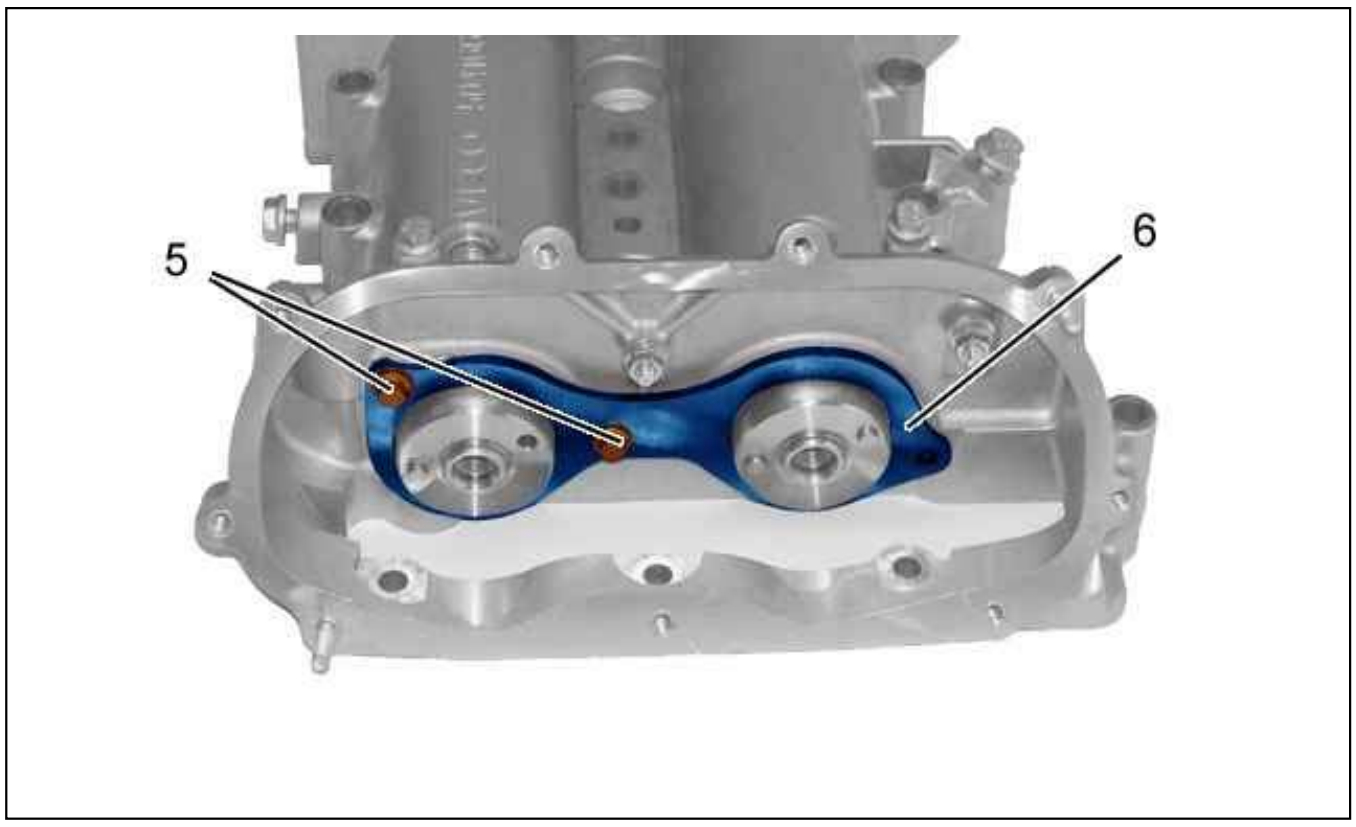

Figure : B1DM006D

Refit :

- The retaining plate (6)
- The bolts (5) ; Tighten to 1 ± 0,1 daN.m

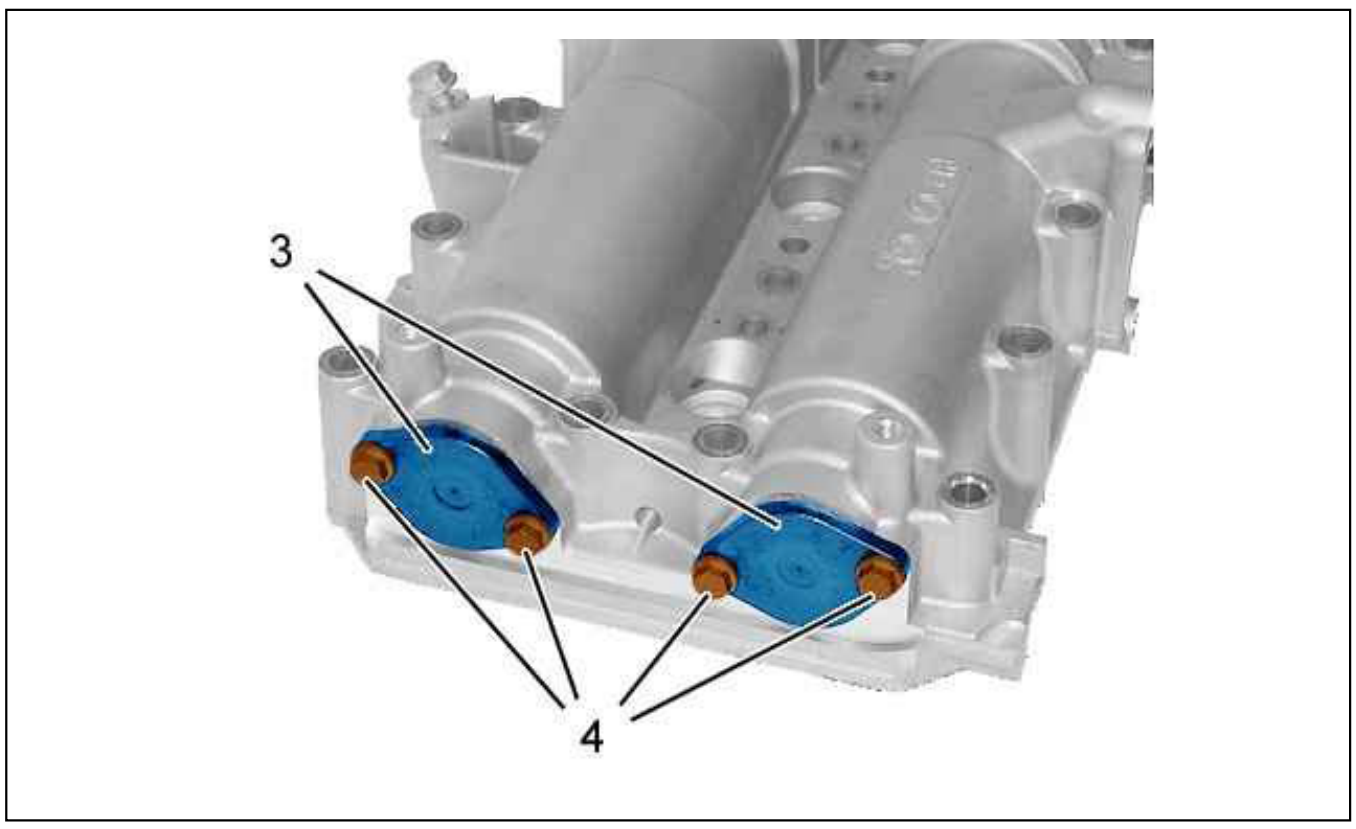

Figure : B1DM005D

- The plugs (3) (new seals)
- The bolts (4) ; Tighten to 1 ± 0,1 daN.m

STRIPPING-ASSEMBLING : ENGINE

1. Tooling

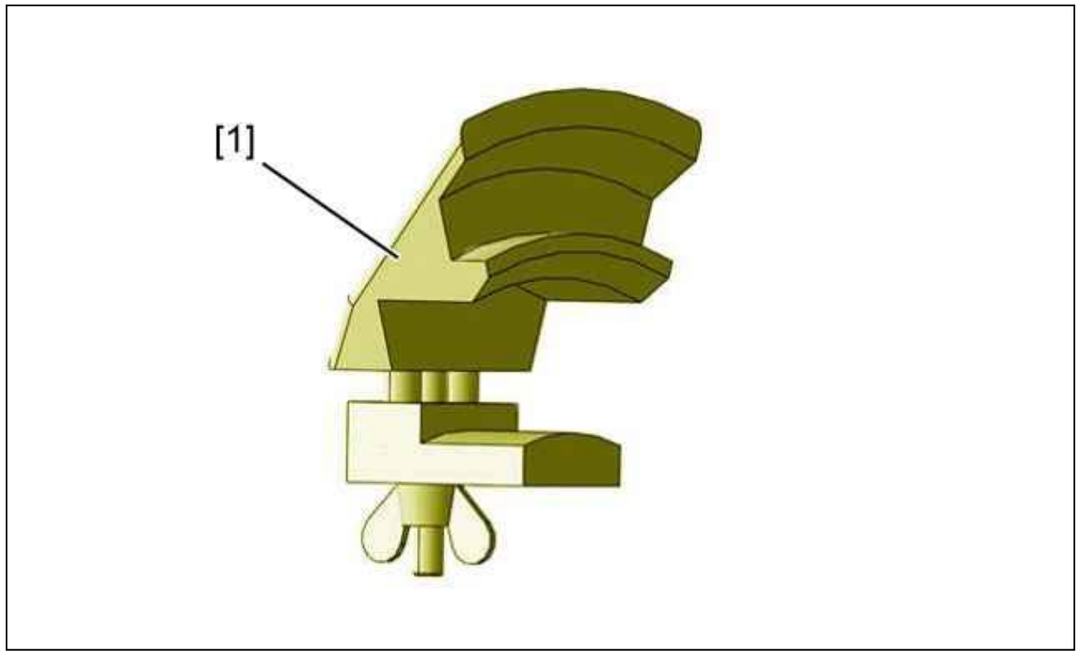

Figure : E5AM00LD

Reference	Designation	Reference
[1]	Tool for removing the elastic ancillary belt	(-).0191/2.AA

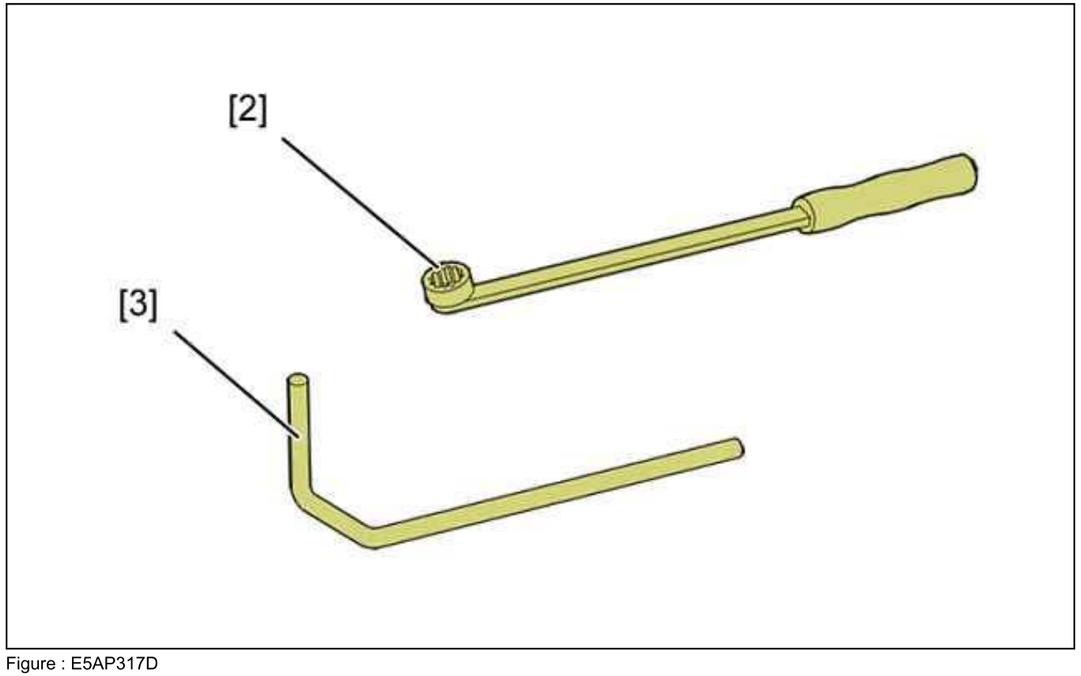

Figure : E5AP317D

Reference	Designation	Reference
[2]	Dynamic tensioner compression lever	(-).0188-Z
[3]	4 mm diameter pin	(-).0188-Q1



Figure : E5AM00MD

Reference	Designation	Reference
[4]	Ancillary belt tensioner socket	(-).0191/2.T

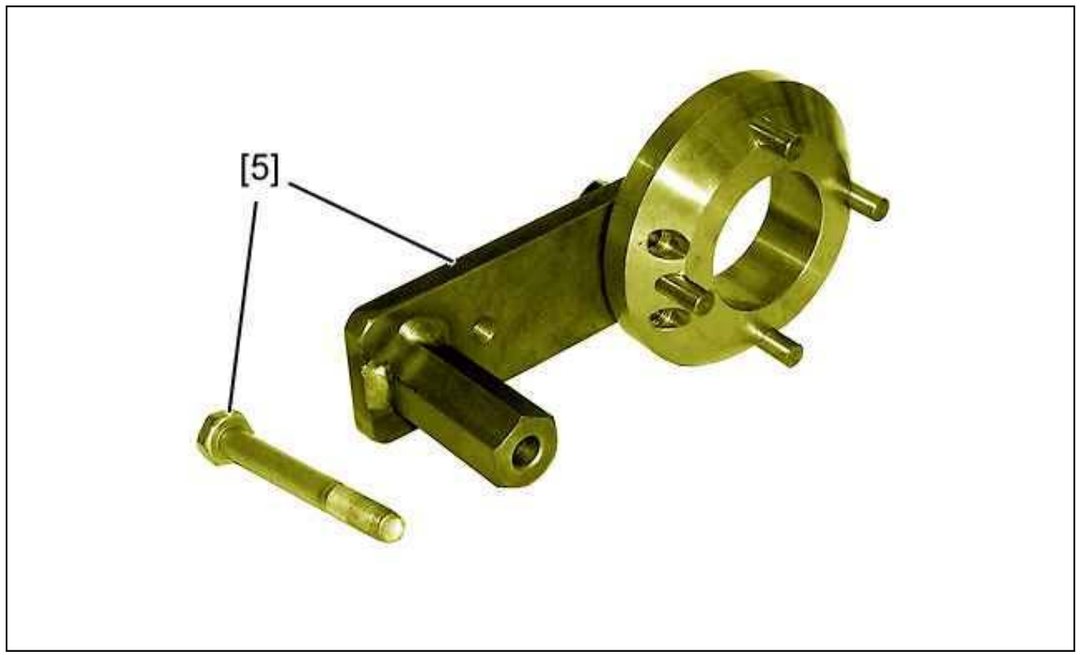

Figure : E5AP3SZD

Reference	Designation	Reference
[5]	Crankshaft pulley immobilisation tool	(-).0191/2.K



Figure : E5AM00ND

Reference	Designation	Reference
[6]	Tool for locking flywheel	(-).0191/2.D

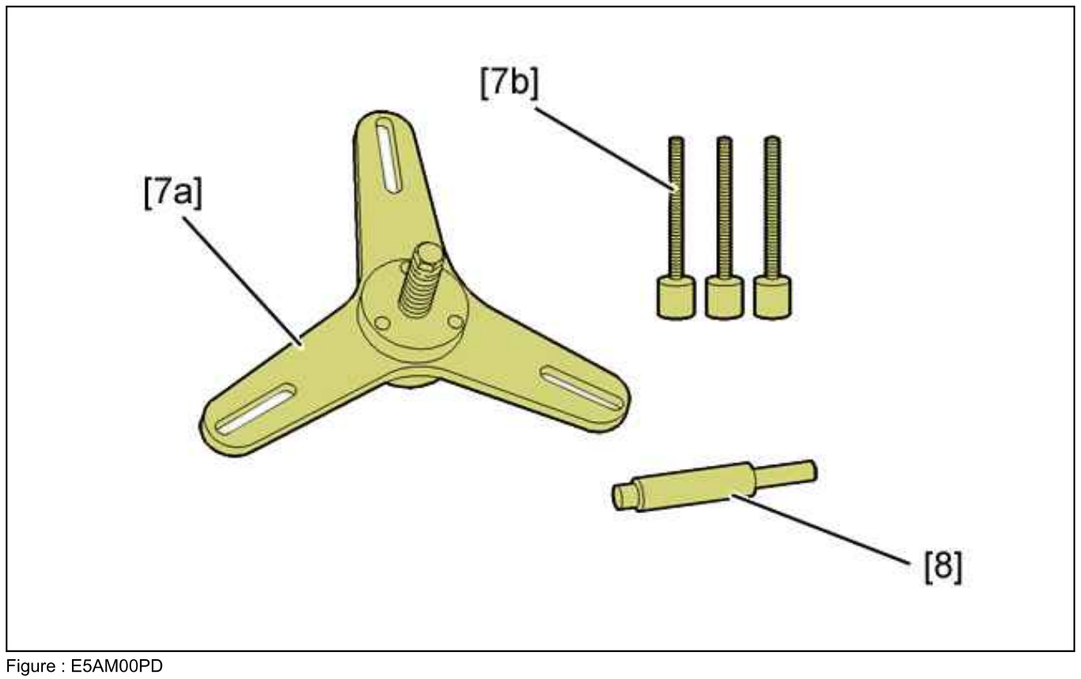

Figure : E5AM00PD

Reference	Designation	Reference
[7a]	Clutch mechanism compressor	(-).0217-A
[7b]	retaining tool	(-) 0217 kit
[8]	clutch centering mandrel	(-) 0217 kit

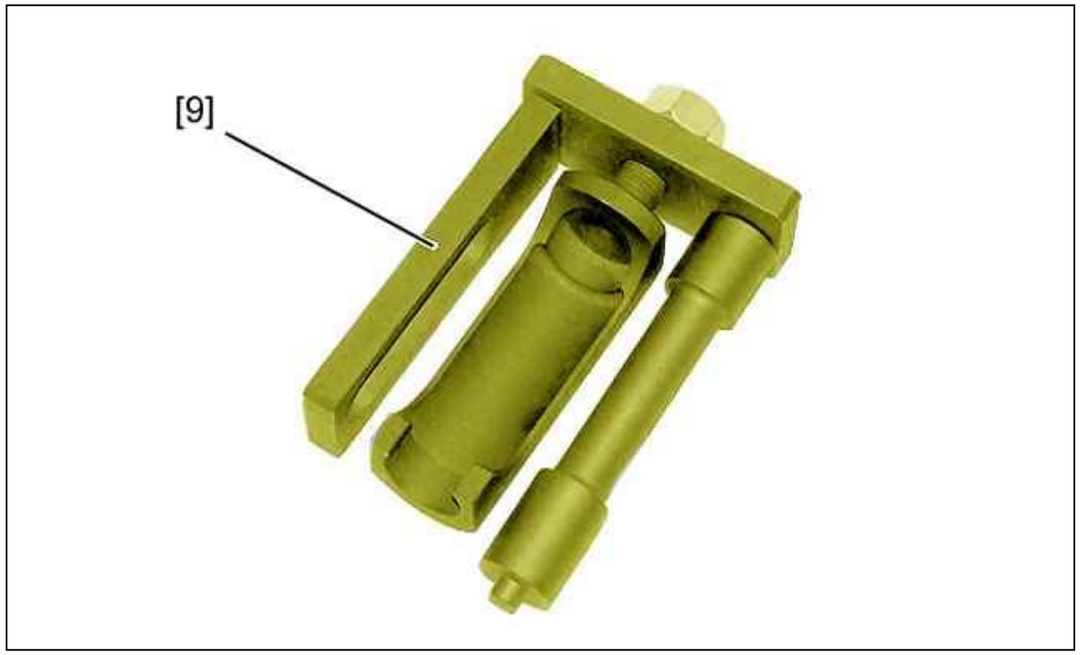

Figure : E5AM00QD

Reference	Designation	Reference
[9]	Diesel injector extractor	(-).0191/2.R

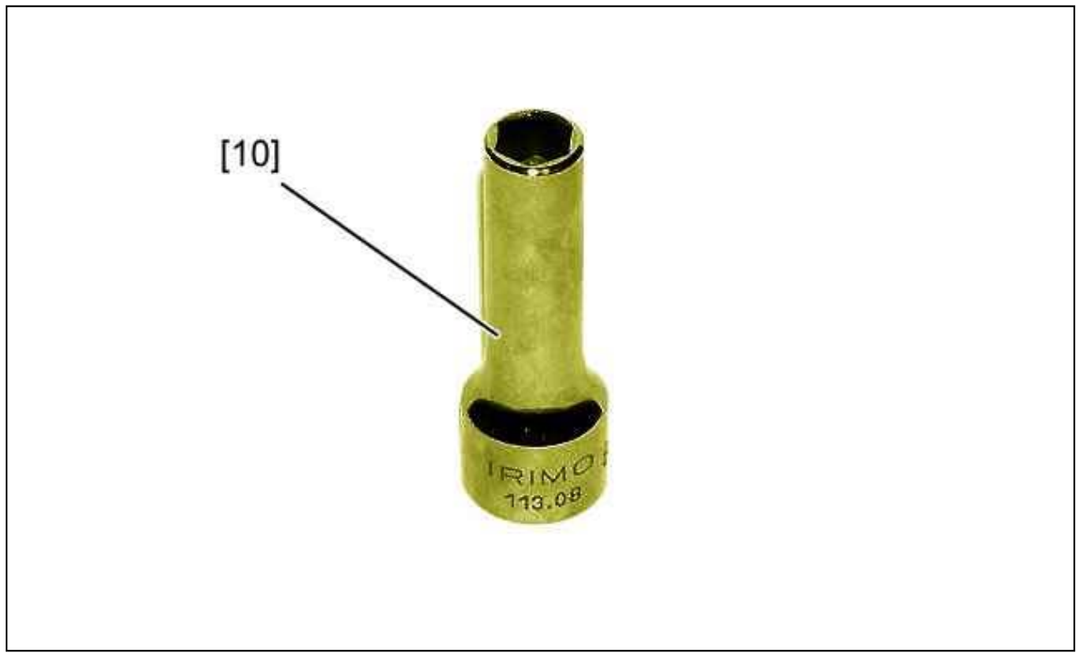

Figure : E5AM00RD

Reference	Designation	Reference
[10]	Socket for pre-heater plugs	(-).0191/2.L

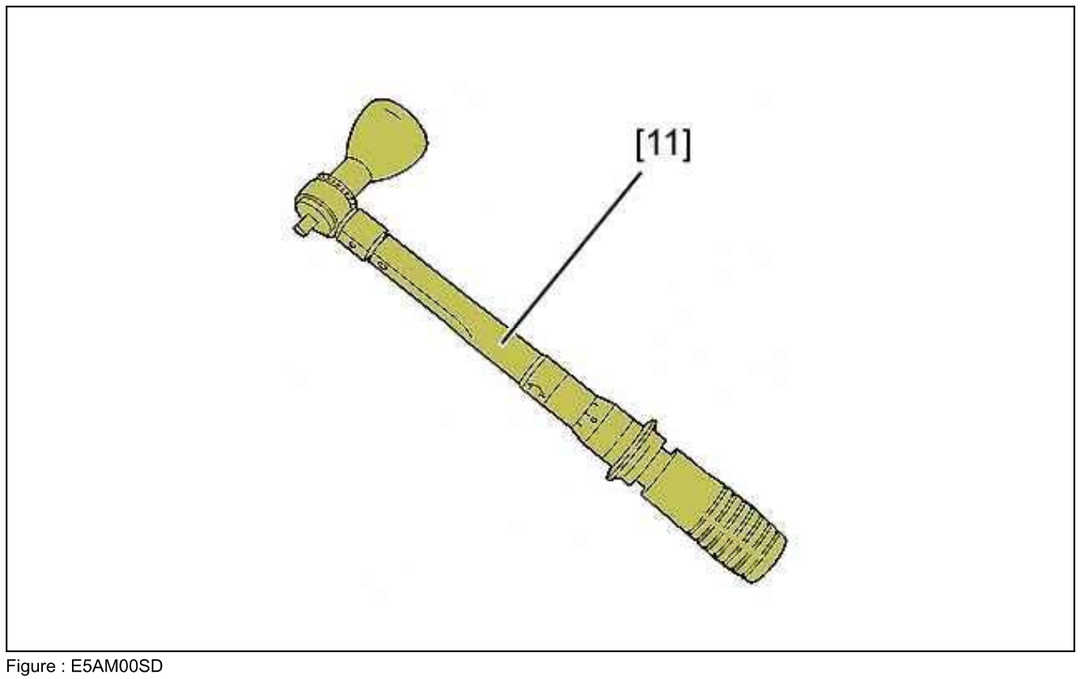

Figure : E5AM00SD

Reference	Designation	Reference	Reference
[11]	Torque wrench	4220-T.B	(-).1603-A

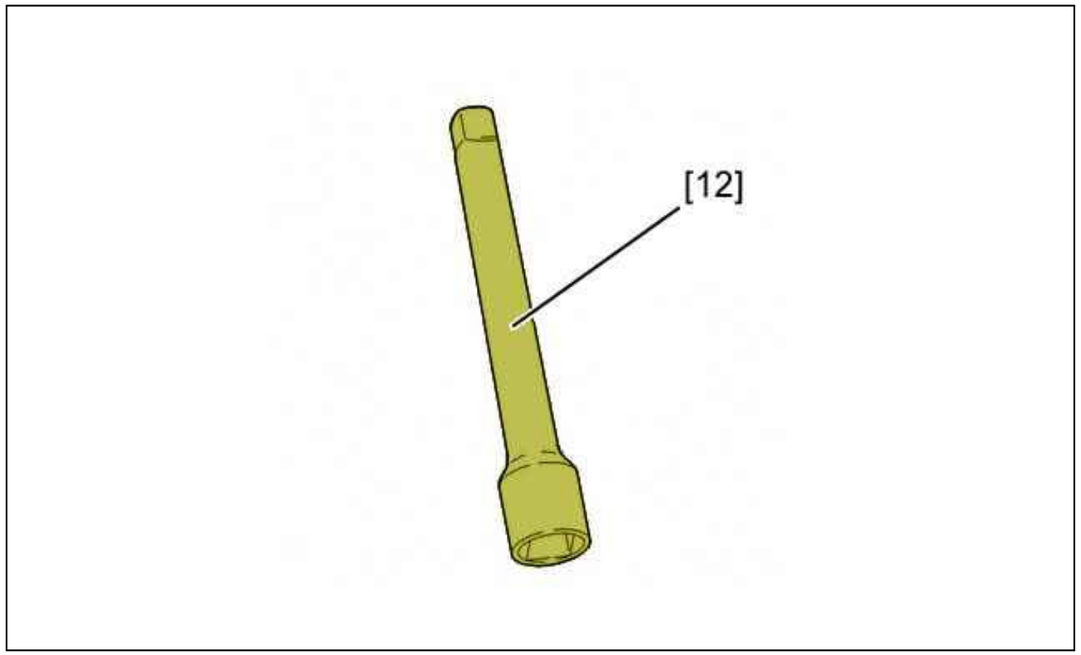

Figure : E5AM00TD

Reference	Designation	Reference	Reference
[12]	Extension	(-).4220-T.J	(-).1603-E

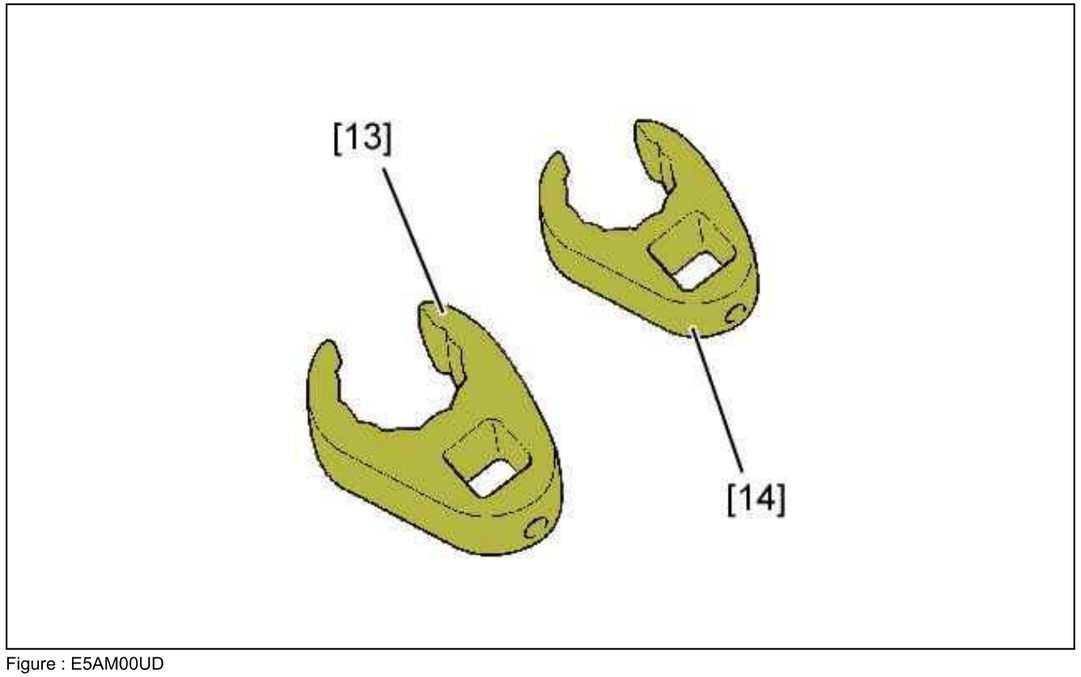

Figure : E5AM00UD

Reference	Designation	Reference	Reference
[13]	pipe spanner (17 mm)	4220-T.C	(-).1603-F
[14]	pipe spanner (14 mm)	4220-T.D	(-).1603-G

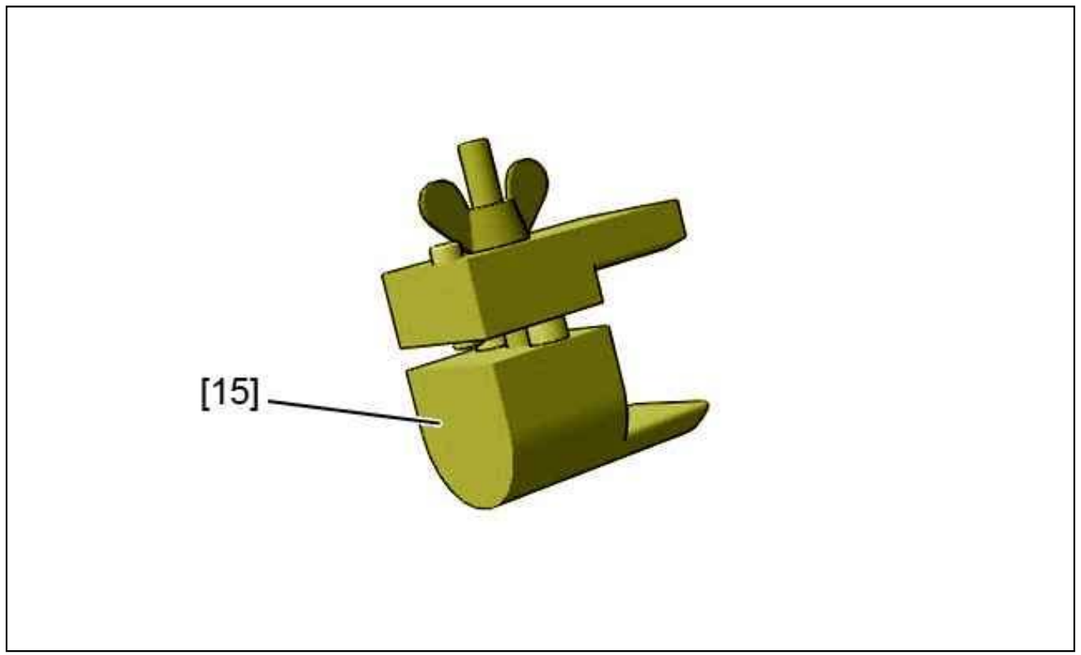

Figure : E5AM00VD

Reference	Designation	Reference
[15]	Tools for fitting the elastic ancillary drive belt	(-).0191/2.AB

2. Stripping

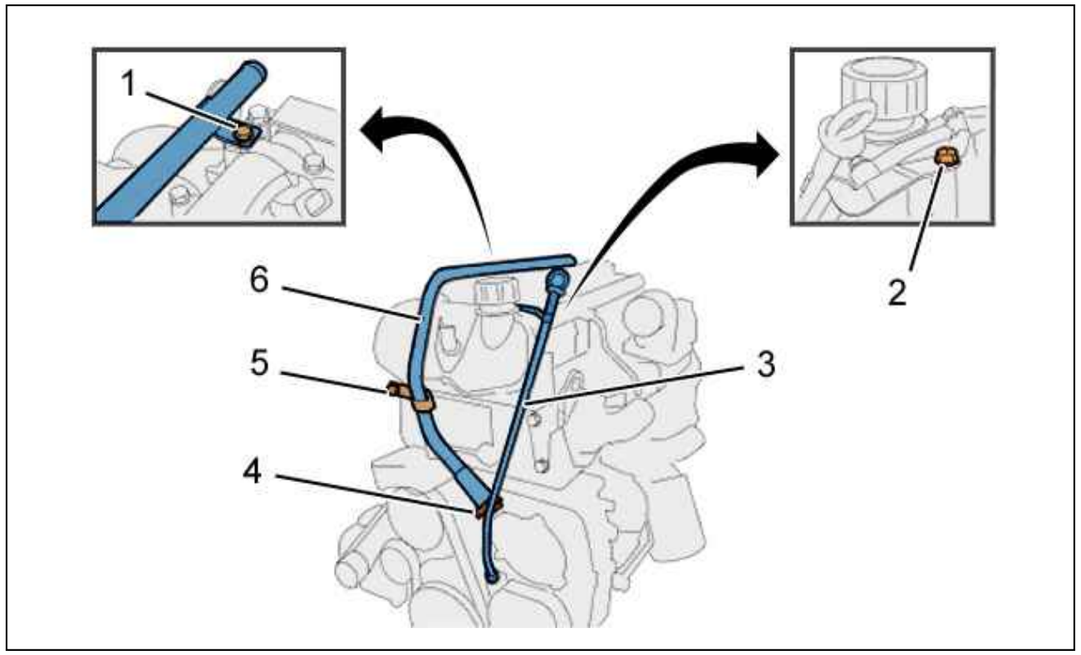

Figure : B1CM00FD

Remove :

- The (2) bolt
- Oil dipstick tube (3) (With the seals)
- The bolts (1), (5)
- The clip (4)
- The tube (6)

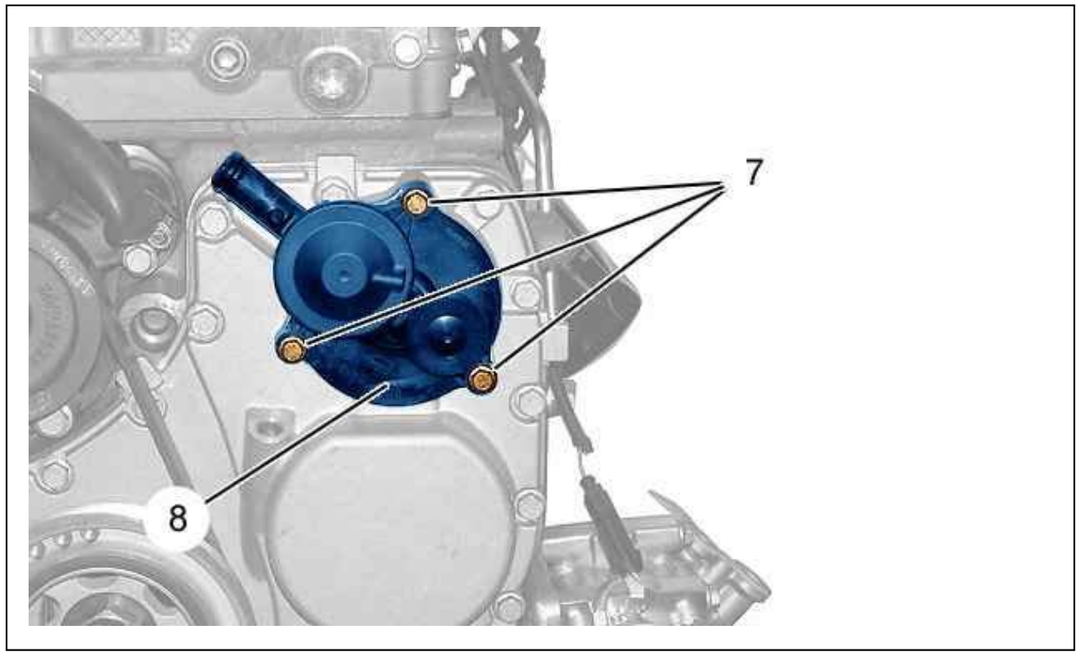

Figure : B1CM00GD

Remove :

- The bolts (7)
- The oil sediment unit (8) (with the seal)

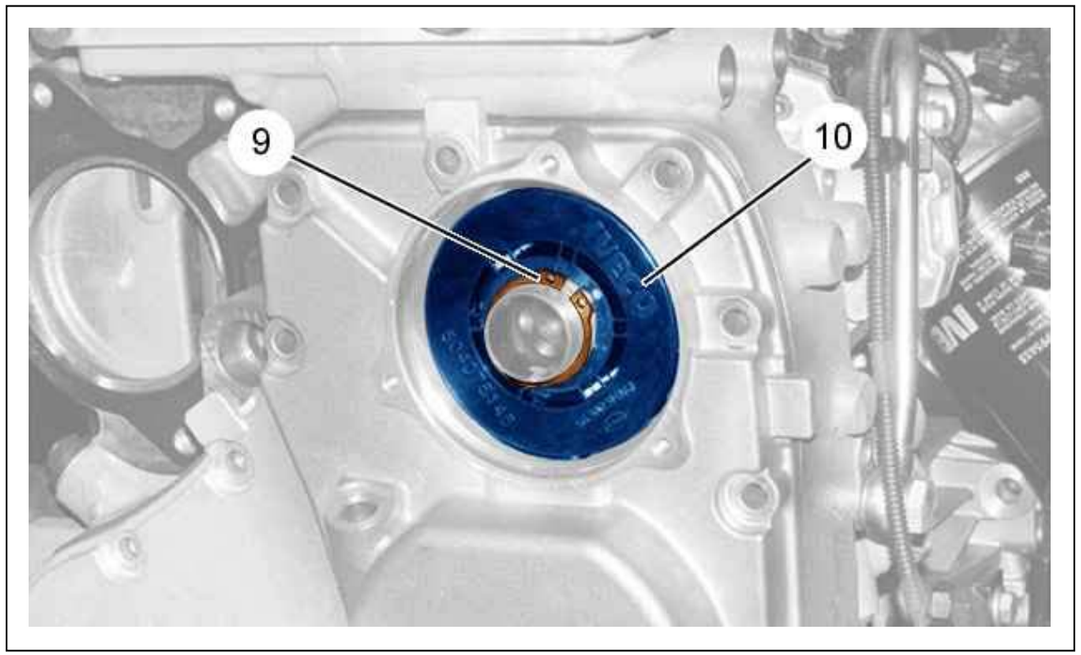

Figure : B1CM00HD

Remove :

- The circlip (9)
- The filler orifice filter (10)

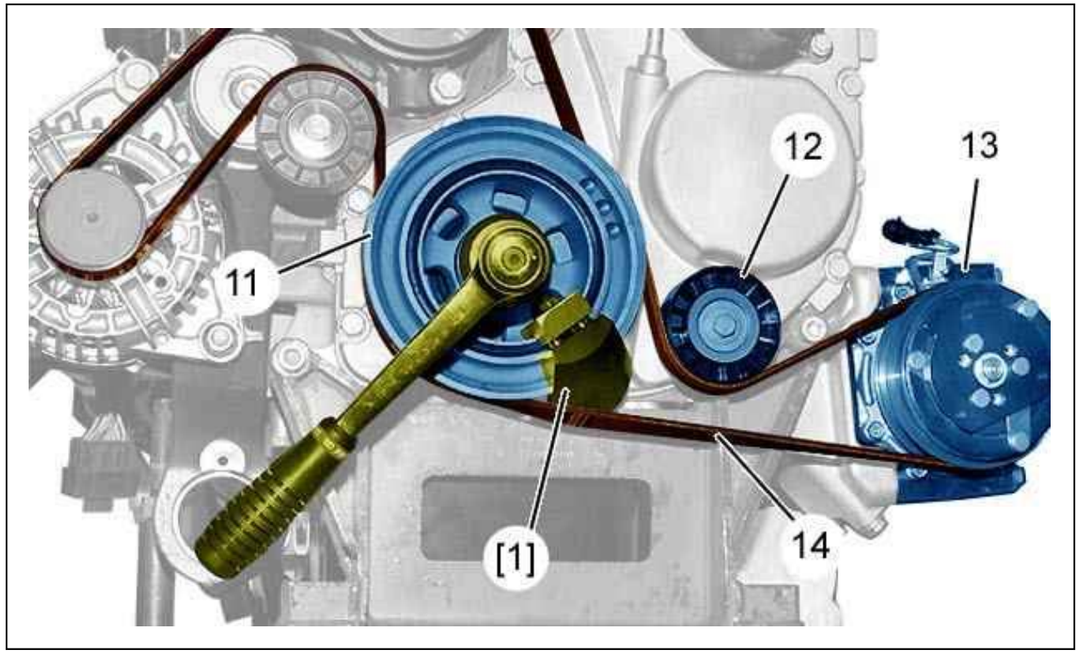

Figure : B1CM00JD

CAUTION : Mark the direction of rotation of the elastic auxiliary drive belt (14) if it is to be reused.

Position the tool [1] on the crankshaft pulley (11).
Turn the crankshaft pulley (11) clockwise using the bolt until the elastic auxiliary drive belt (14) is removed completely, then until the tool [15] disengages.
Remove (according to equipment) :

- The elastic ancillary belt (14)
- The tensioning roller (12)
- The air-conditioning compressor (13)

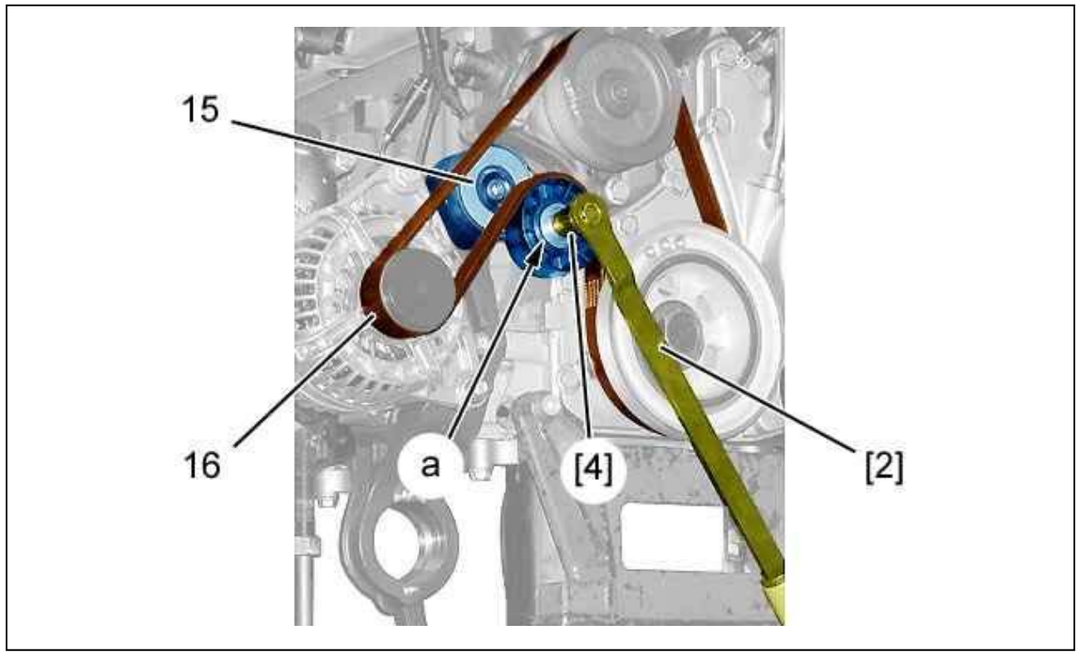

Figure : B1CM00KD

CAUTION : Mark the direction of fitting of the accessories drive belt (16) if it is to be reused.

Compress the dynamic roller tensioner (15) (at "a") (clockwise) ; Using the tools [2], [4].
Peg the dynamic roller tensioner (15) ; Using tool [3].
Remove the accessories drive belt (16).

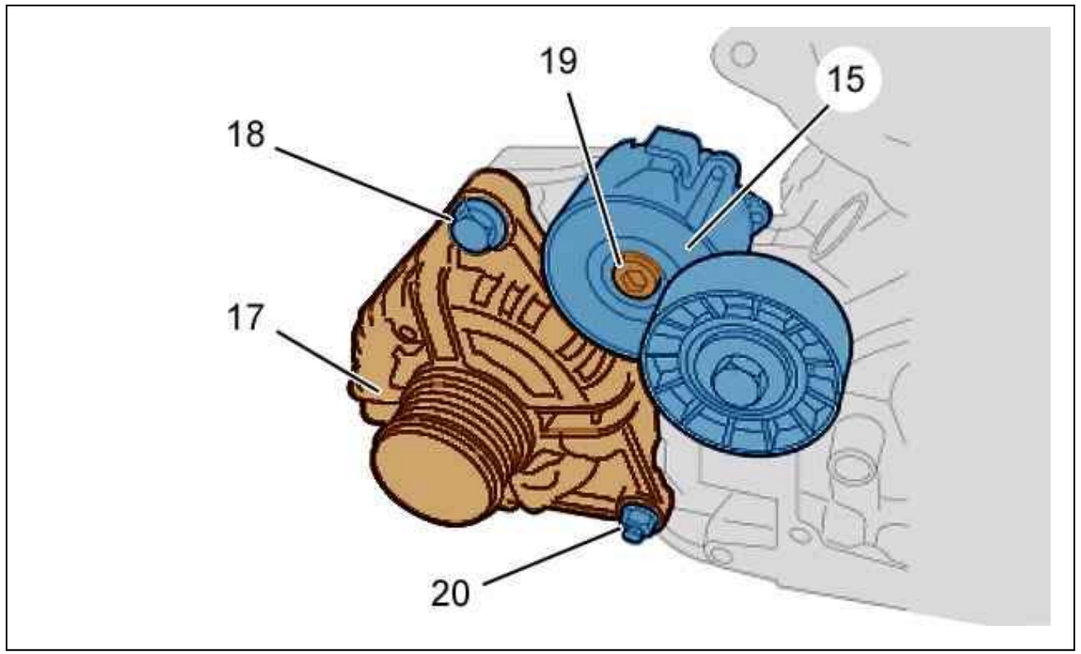

Figure : B1CM00LD

Unplug :

- The alternator (17) electrical harness
- The air conditioning compressor (13) electrical harness (according to equipment)

Remove :

- The (19) bolt
- The dynamic roller tensioner (15)
- The mountings (18), (20)
- The alternator (17)

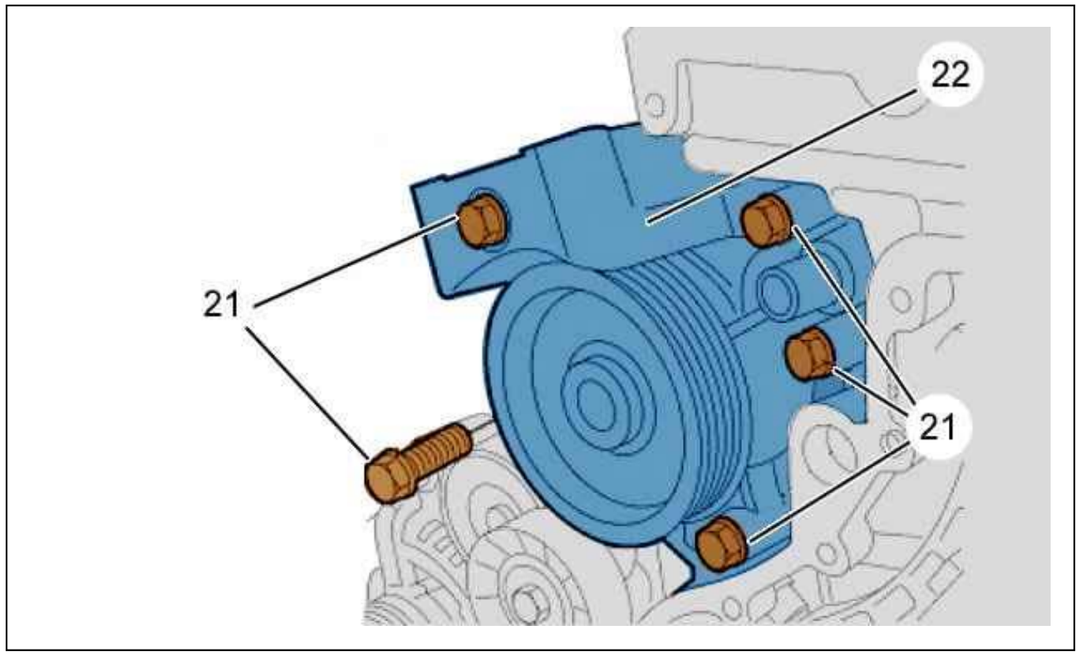

Figure : B1BM00AD

Remove :

- The bolts (21)
- The coolant pump (22) (with the seal)

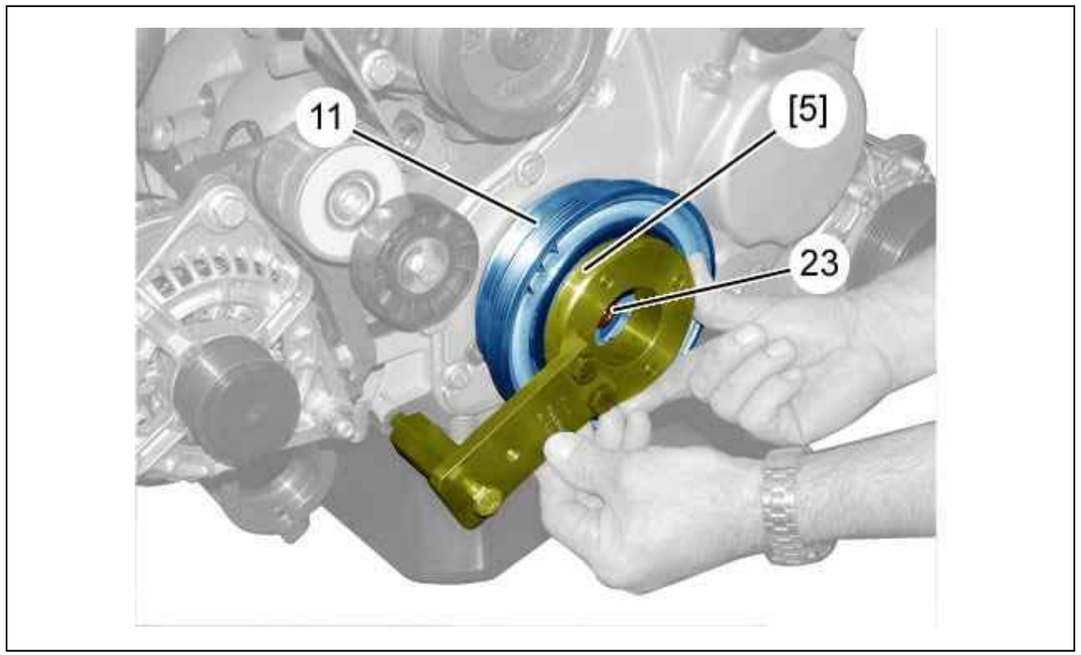

Figure : B1EM008D

Immobilise the pulley (11) ; Using tool [5].
Remove :

- The (23) bolt
- The tool [5]
- The crankshaft pulley (11)

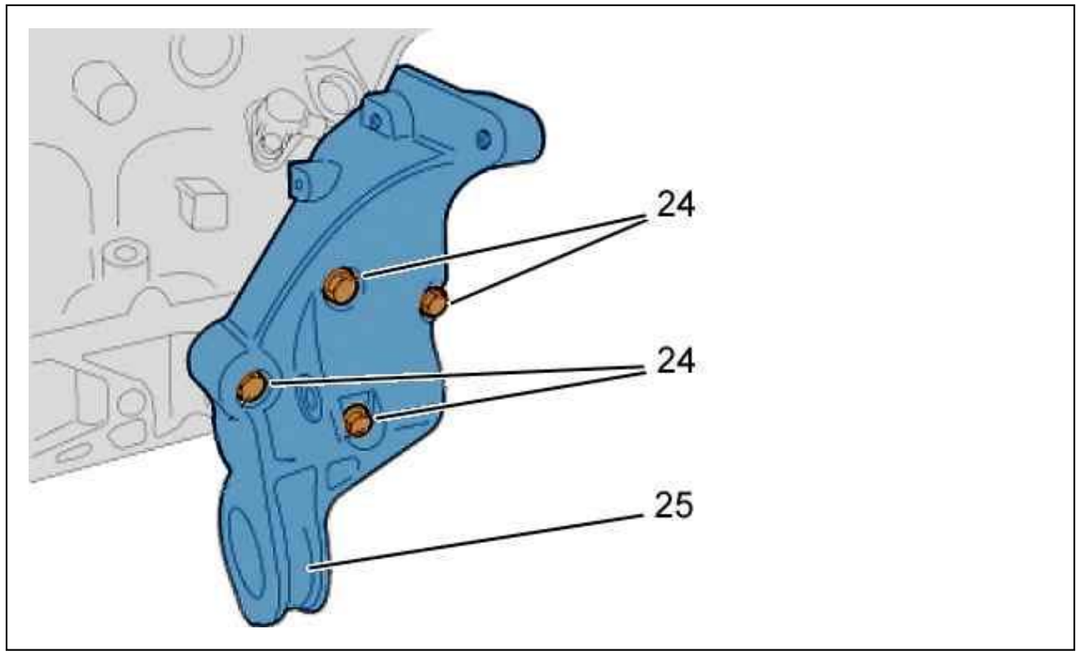

Figure : B1BM00BD

Remove :

- The bolts (24)
- The alternator support (25)

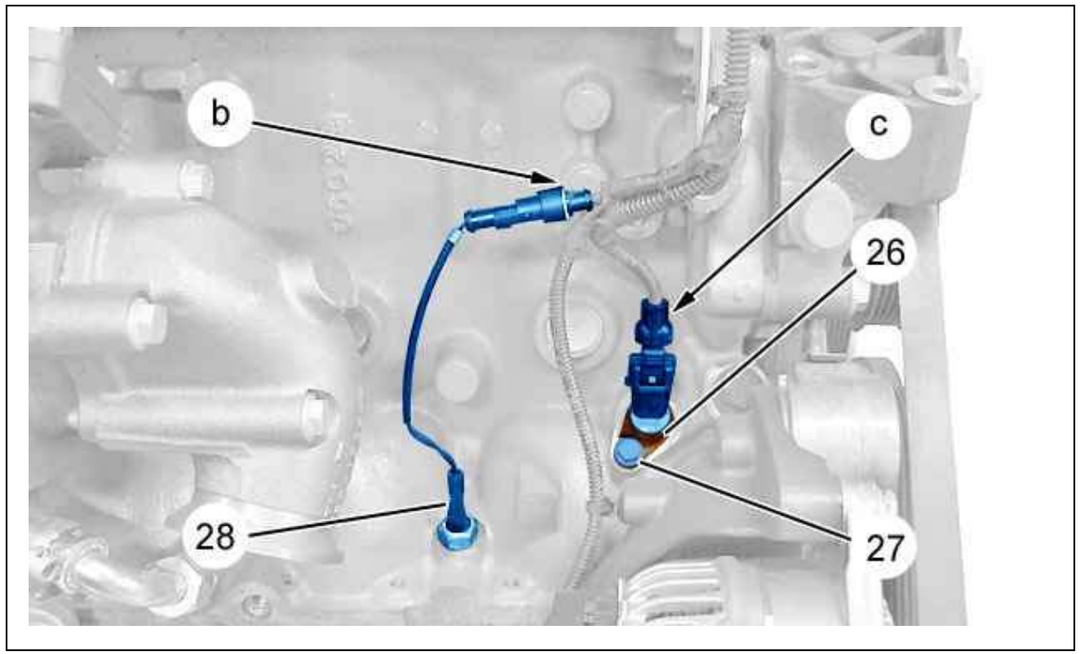

Figure : B1BM00CD

Disconnect the connectors from the following components :

- Engine speed sensor (26) (at "c")
- Engine oil level sensor (28) (at "b")

Remove :

- The (27) bolt
- The engine speed sensor (26)

Unscrew and remove the oil level sensor (28).

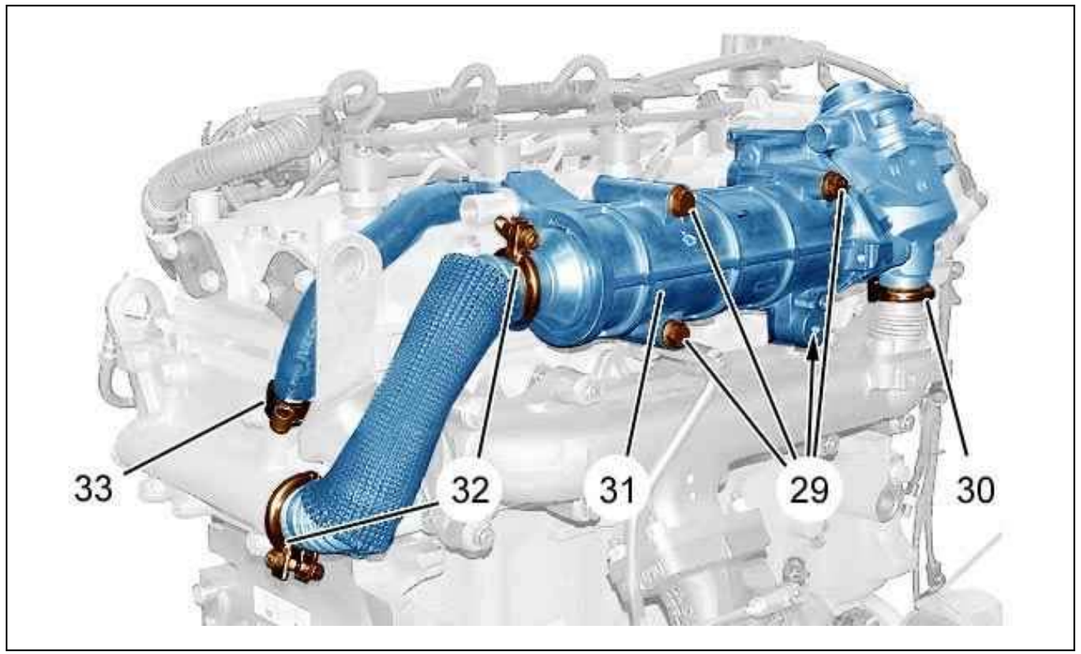

Figure : B1BM00DD

Remove :

- The clips (30), (32), (33)
- The bolts (29)
- The EGR electrovalve with the heat exchanger (31)

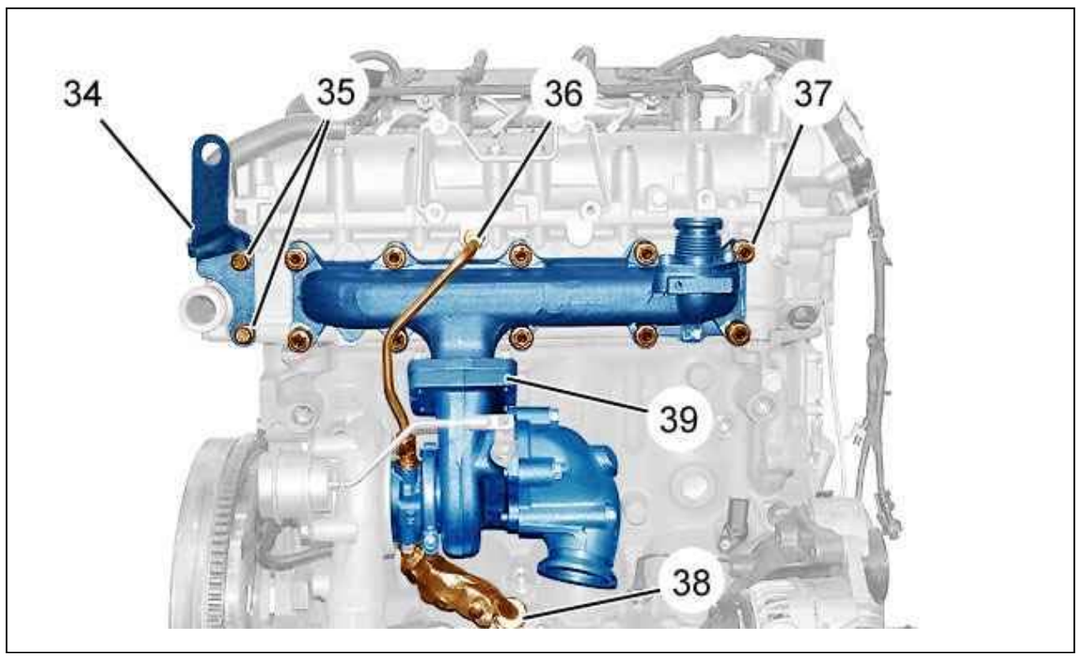

Figure : B1BM00ED

Unscrew :

- The oil inlet union (36)
- The oil outlet union (38)

Remove :

- The bolts (35)
- The lifting eye (34)
- The nuts (37) with their spacers

Remove the turbocompressor/exhaust manifold assembly (39).
Remove the exhaust manifold seal.

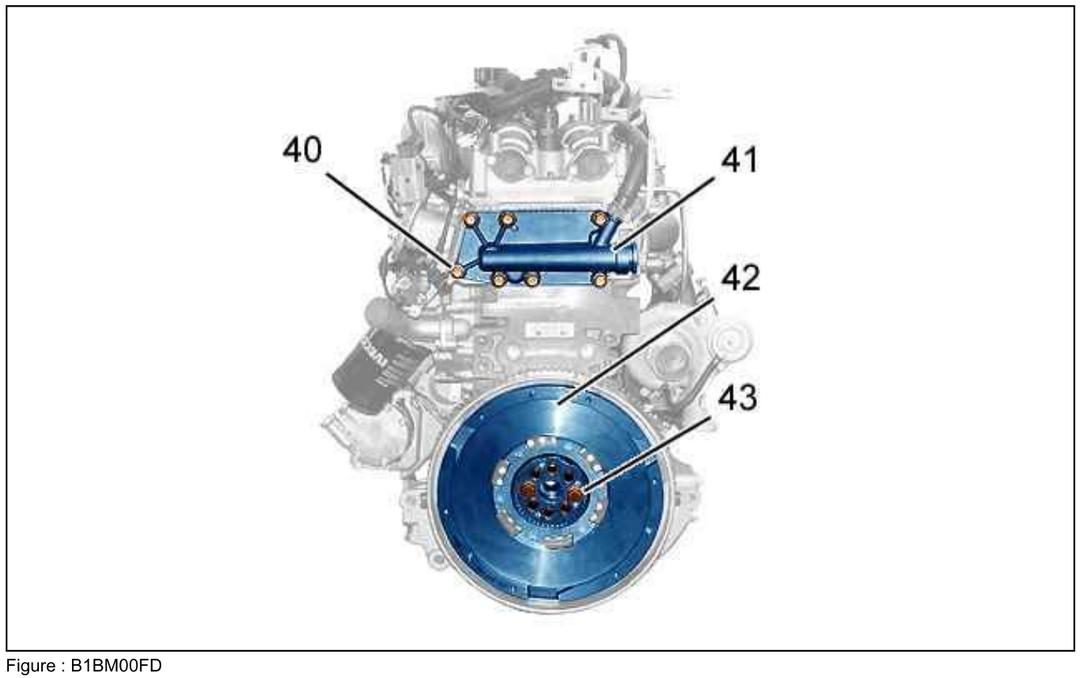

Figure : B1BM00FD

Remove :

- The 7 bolts (40)
- The exhaust gas recycling duct (41) (with the seal)

Fit the tool [6].
Remove :

- The clutch mechanism ; Using tool [7]
- The 8 bolts (43)
- The double flywheel (42)

Remove the tool [6].

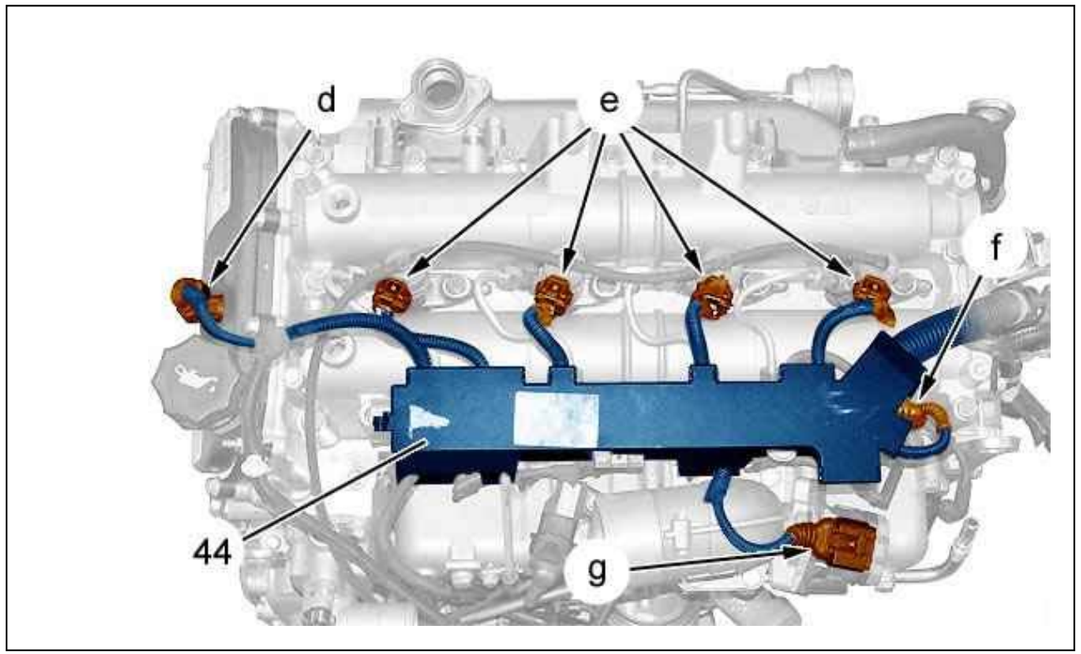

Figure : B1BM00GD

Disconnect the connectors (at "e", "d", "f", "g").
Release and move aside the harness support (44).

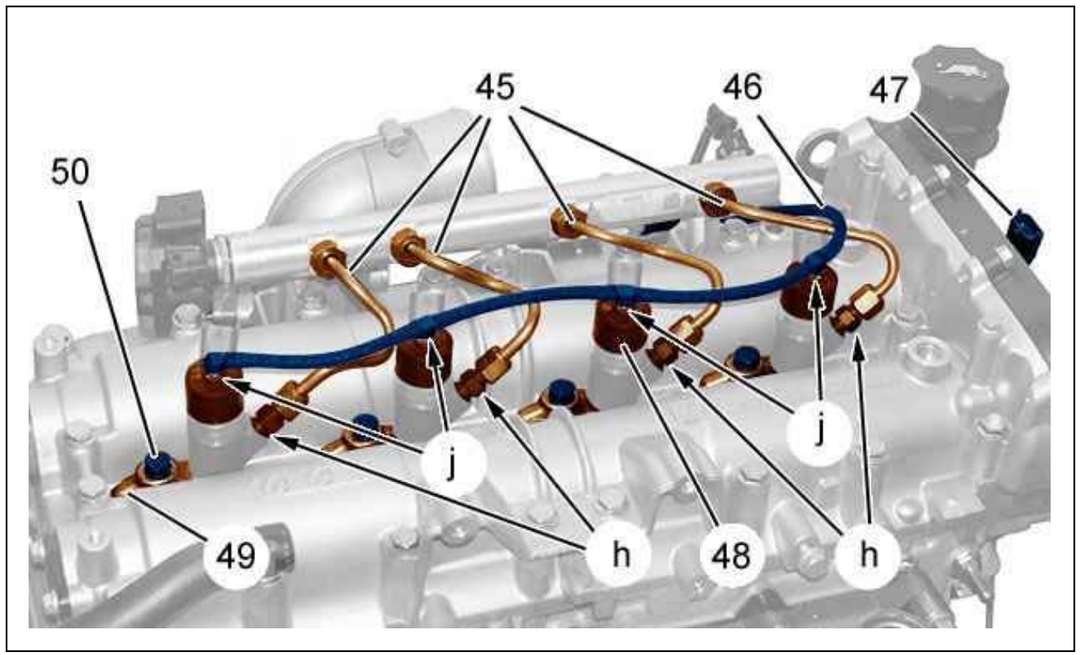

Figure : B1HM002D

CAUTION : Clean the high pressure fuel unions .

Remove the clips at "j".
Move aside the fuel return pipe (46).
Slacken the bolts of the fuel high pressure common rail .

N.B. : Apply a counter-torque (at "h").

Uncouple the fuel pipes (45).
Remove the cylinder reference sensor (47).

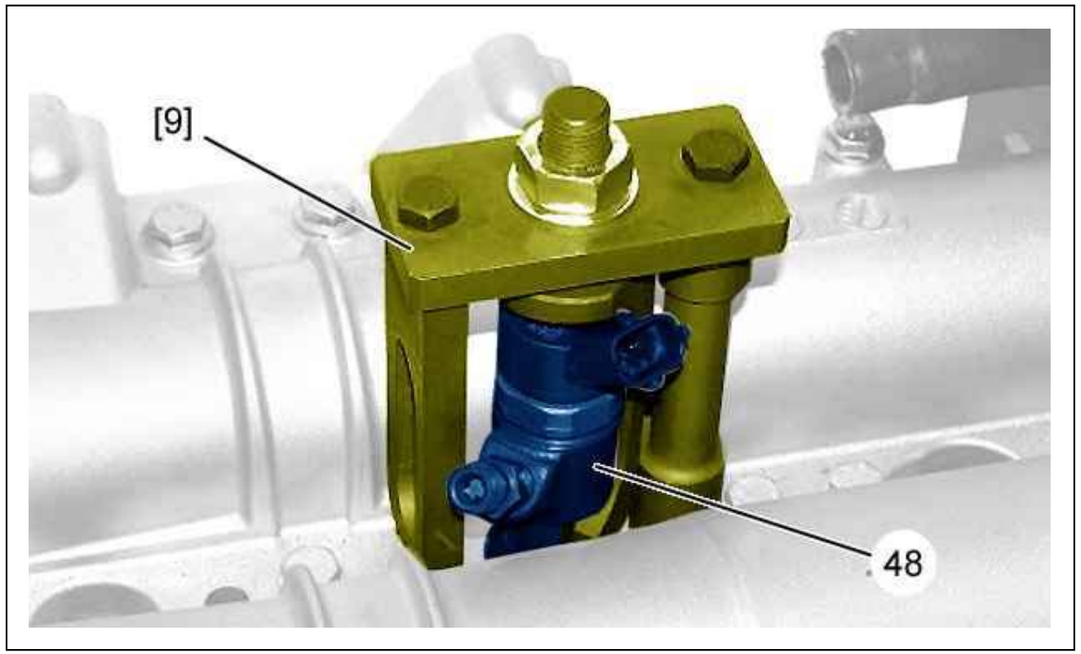

Figure : B1HM003D

CAUTION : Mark the location of the diesel injectors (48).

Remove :

- The clamps (49)
- The nuts (50) ; Tighten to 2,8 ± 0,3 daN.m
- The diesel injectors bolt and clip (48)
- The diesel injectors (48) ; Using tool [9]

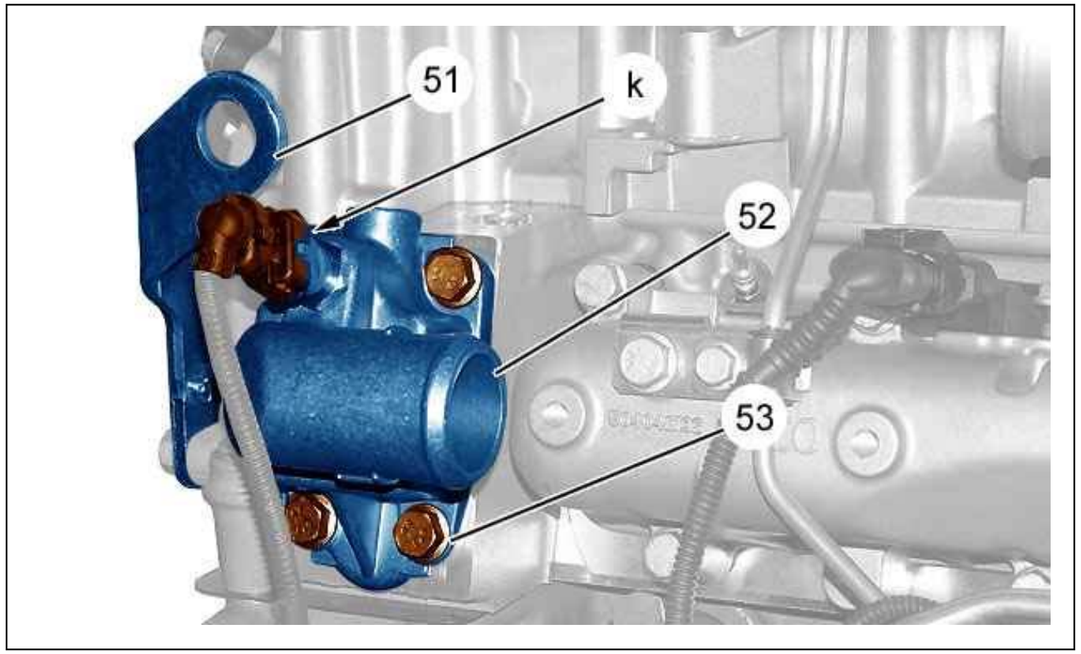

Figure : B1CM00MD

Disconnect the connector (at "k").
Remove :

- The lifting eye (51)
- The 4 bolts (53)
- The thermostat (52) (with the seal)

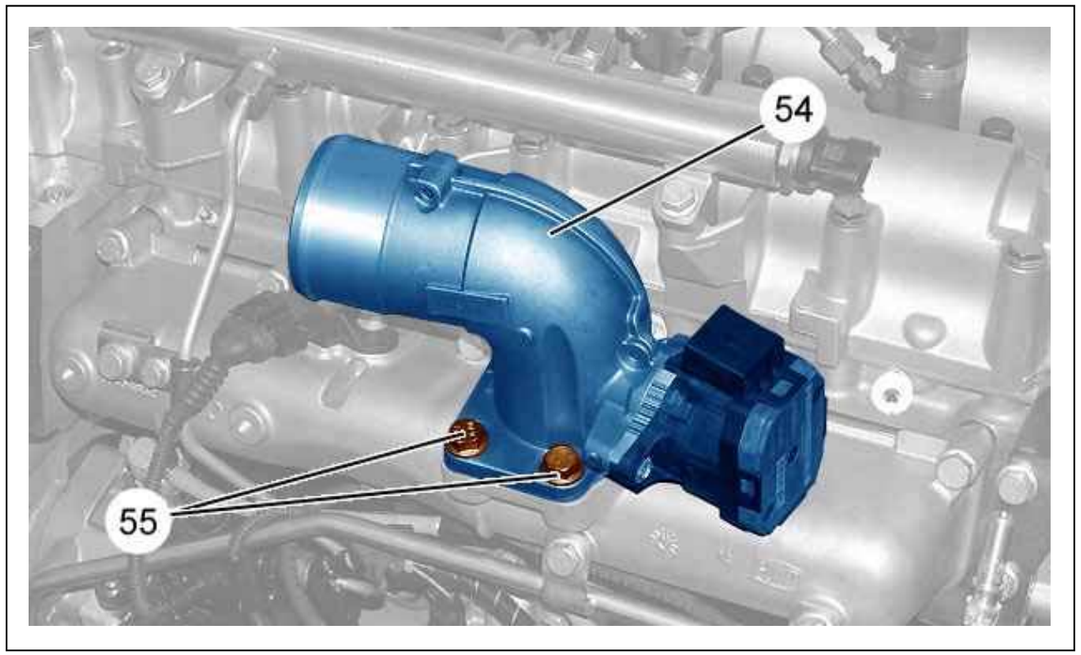

Figure : B1HM004D

Remove :

- The 4 bolts (55)
- The air metering control unit (54) (with the seal)

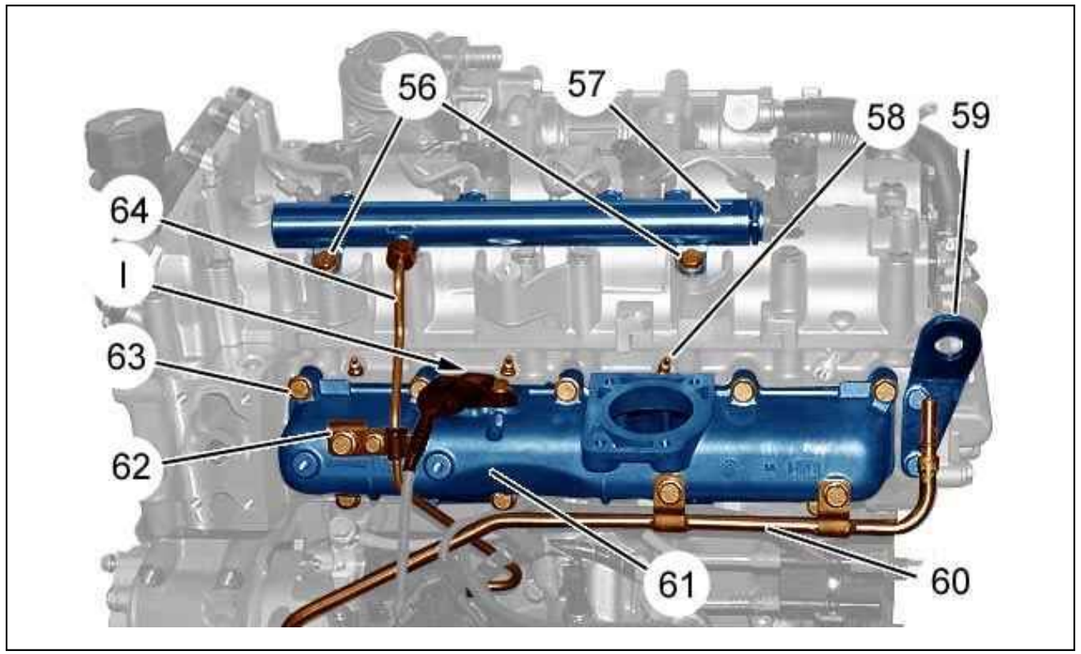

Figure : B1CM00ND

Remove :

- The vacuum pipe (60)
- The mounting lug (62)

Remove the high pressure fuel supply pipe 64.
Disconnect the connector (at "l").
Remove :

- The bolts (56)
- The fuel high pressure common rail (57)
- The lifting eye (59)
- The bolts (63)
- The inlet manifold (61) (with the seal)
- The pre-heater plugs (58) ; Using tool [10]

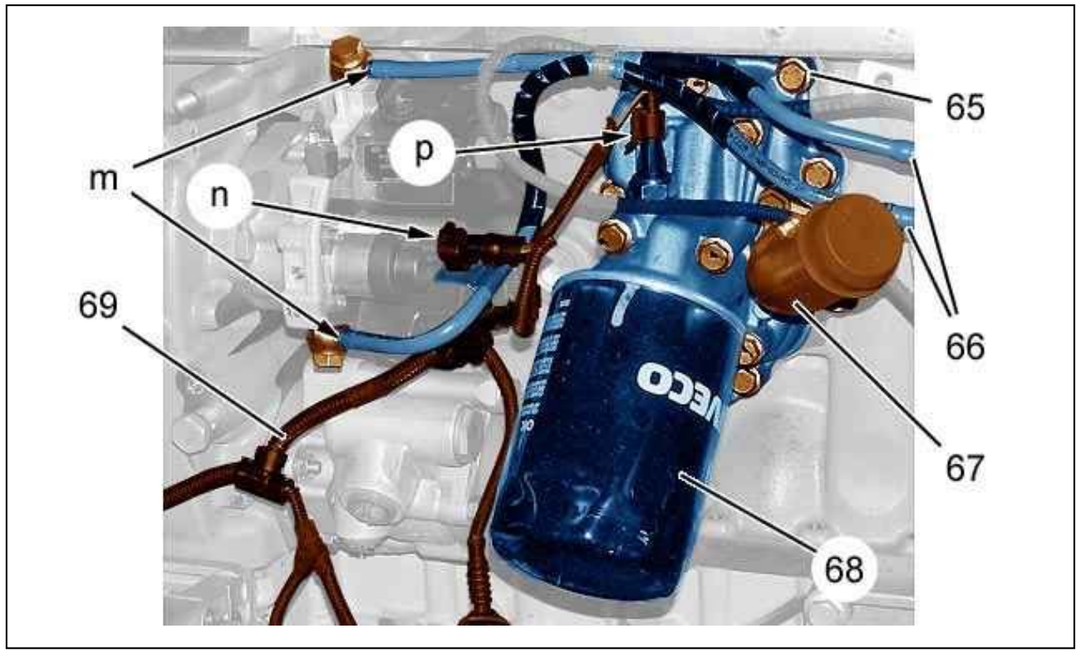

Figure : B1FM001D

Disconnect the connectors (at "n", "p").
Uncouple the fuel pipes (64) (at "m").
Remove :

- The oil filter (68)
- The bolts (65)
- The heat exchanger (67) (with the seal)
- The electric motor harness (69)

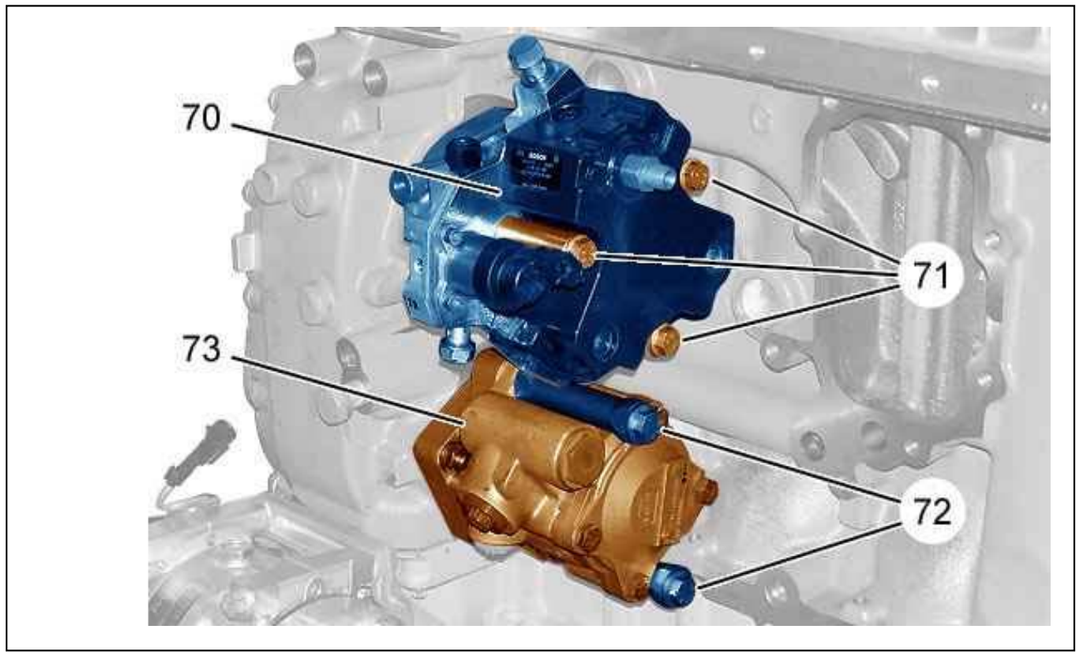

Figure : B1CM00PD

Remove :

- The bolts (71) and their spacers
- The fuel high pressure pump (70) (with the seal)
- The bolts (72) and their spacers
- The power steering pump (73)

3. Re-assembling

CAUTION : When re-assembling, always replace the circlips , the washers , the seals and the bolts , applying threadlock.

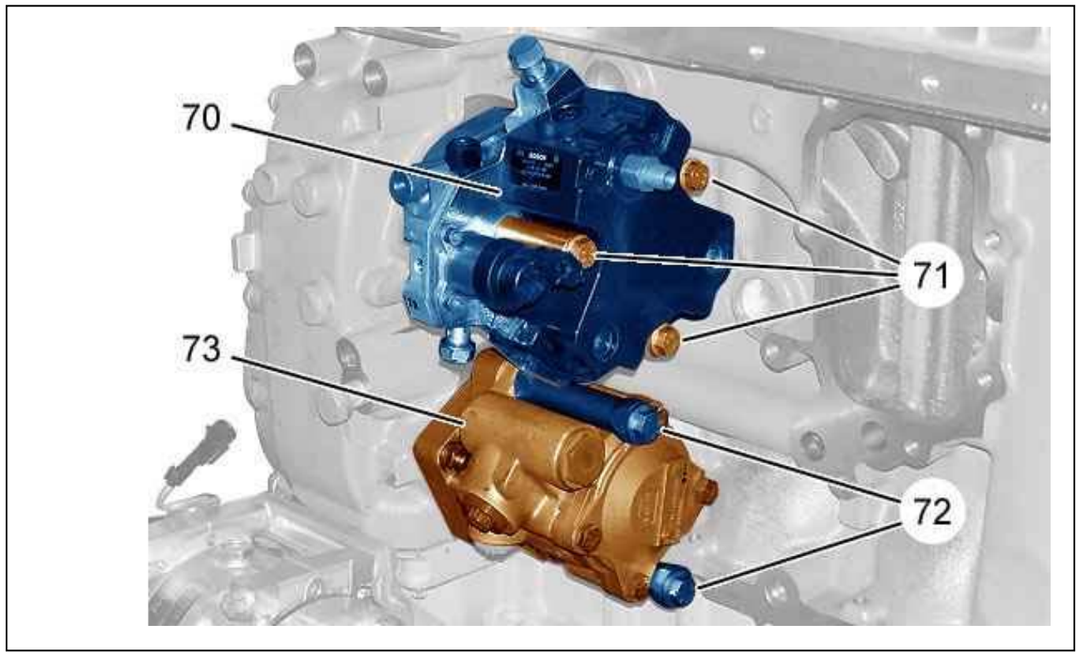

Figure : B1CM00PD

Refit :

- The power steering pump (73) (with the seal)
- The bolts (72) and their spacers ; Tighten to 4,0 ± 0,4 daN.m
- The fuel high pressure pump (70) (with the seal)
- The bolts (71) and their spacers ; Tighten to 2,5 ± 0,3 daN.m

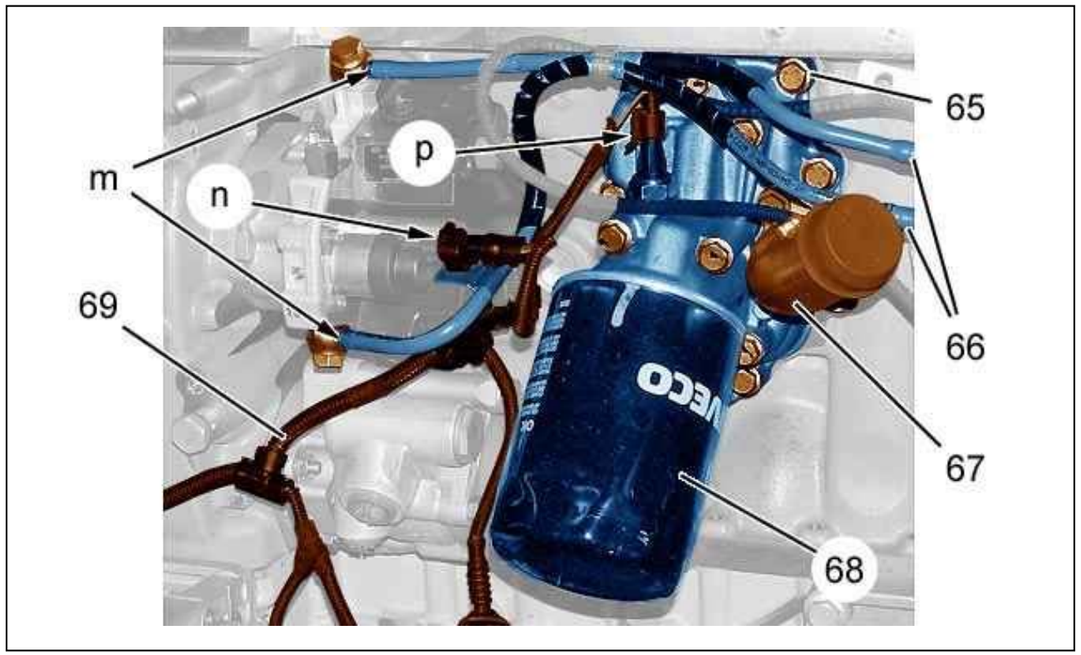

Figure : B1FM001D

Refit :

- The heat exchanger (67) (new seal)
- The bolts (65) ; Tighten to 2,5 ± 0,3 daN.m
- The oil filter (68) ; Tightening to 2,5 ± 0,3 daN.m
- The electric motor harness (69)

Connect the fuel pipes (66) (new seals) (at "m") ; Tighten to 1 ± 0,1 daN.m.
Reconnect the connectors (at "n", "p").

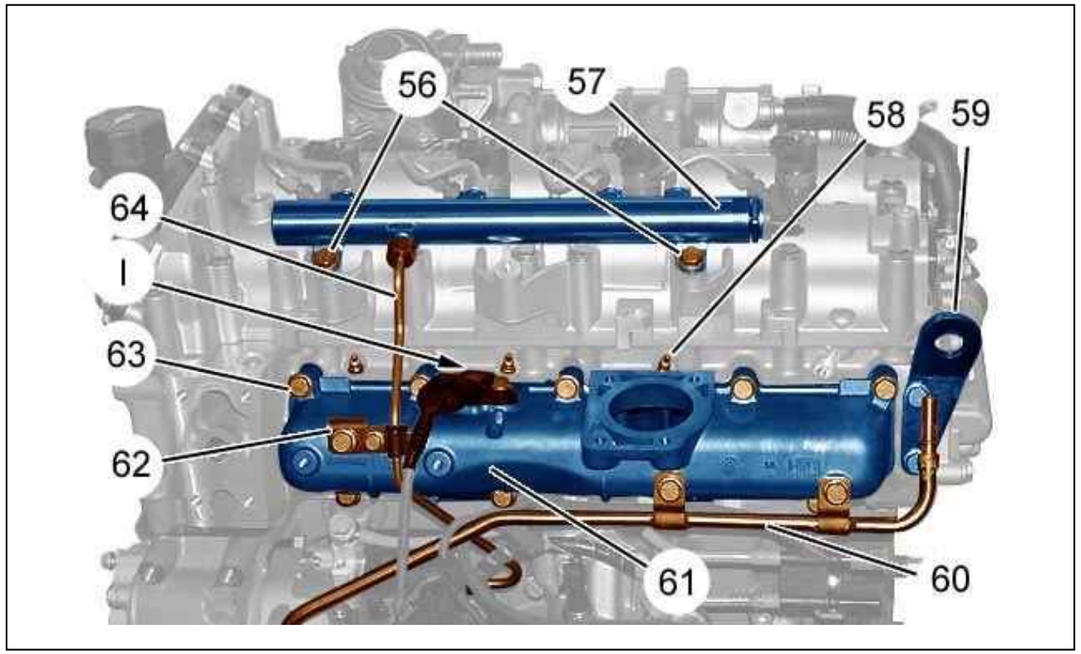

Figure : B1CM00ND

CAUTION : Replace the fuel high pressure supply pipes that have been removed.

Refit :

- The pre-heater plugs (58) ; Using tool [10] ; Tightening to 1 ± 0,1 daN.m
- The inlet manifold (61) (new seal)
- The bolts (63) ; Tighten to 3,0 ± 0,3 daN.m
- The lifting eye (59) ; Tightening to 2,5 ± 0,3 daN.m
- The fuel high pressure common rail (57)
- The bolts (56) (Screw in without tightening)
- The fuel high pressure supply pipe (64) (new) ; Tightening to 2,5 ± 0,3 daN.m , Using the tools [11], [12], [13], [14]
- The mounting lug (62) ; Tightening to 3 ± 0,3 daN.m
- The vacuum pipe (60) ; Tighten to 3,5 ± 0,4 daN.m

Tighten the bolts (56) to 2,8 ± 0,3 daN.m.
Reconnect the connector (at "I").

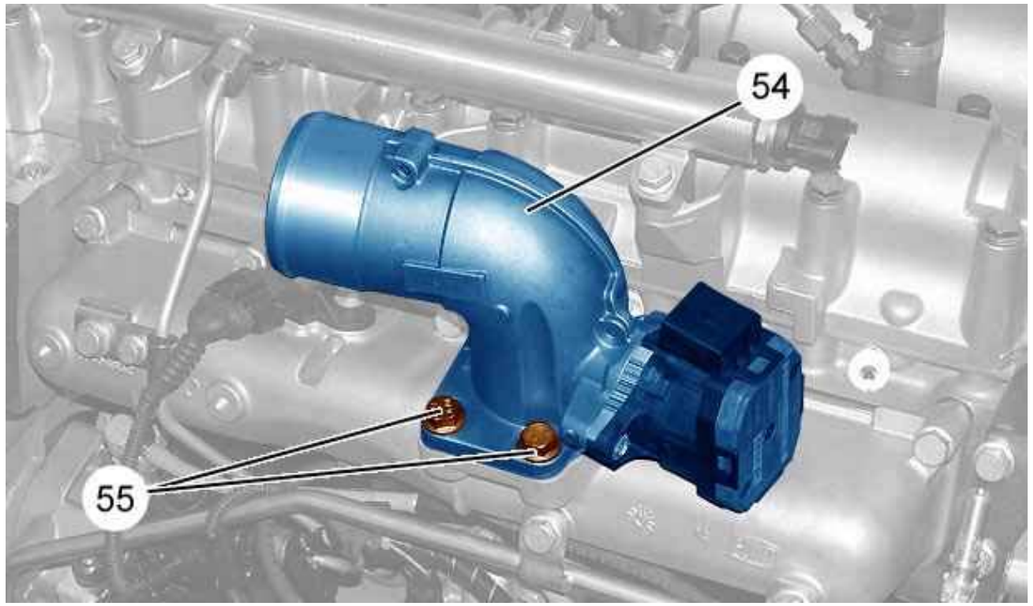

Figure : B1HM004D

Refit :

- The air metering control unit (54) (new seal)
- The 4 bolts (55) ; Tighten to 3 ± 0,3 daN.m

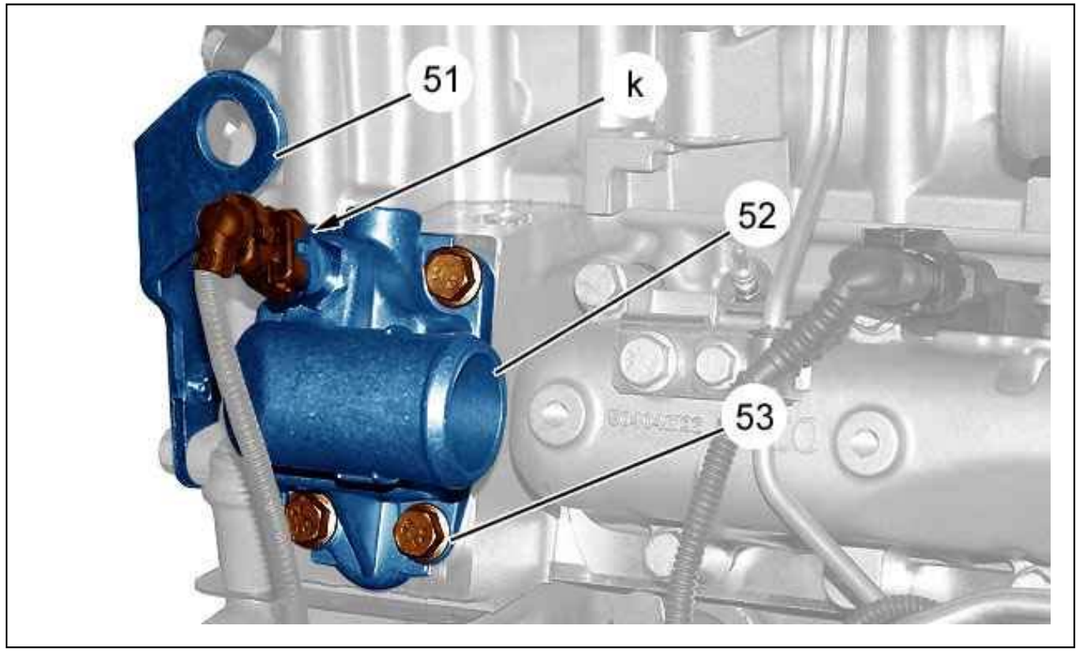

Figure : B1CM00MD

Refit :

- The thermostat (52) (new seal)
- The 4 bolts (53) ; Tighten to 2,5 ± 0,3 daN.m
- The lifting eye (51) ; Tightening to 3 ± 0,3 daN.m

Reconnect the connector (at "k").

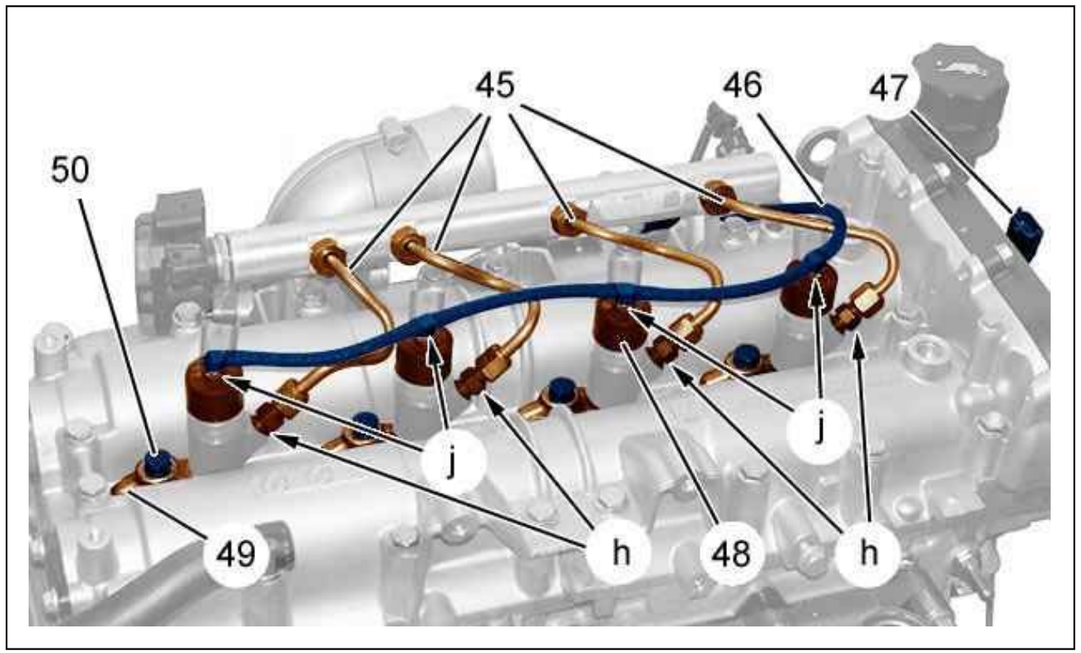

Figure : B1HM002D

CAUTION : Refit the diesel injectors (48)(respect the marks made on removal) (Diesel injectors re-used).

Refit :

- The diesel injectors (48) (new seals)
- The clamps (49)
- The nuts (50) ; Tighten to 2,8 ± 0,3 daN.m
- The high pressure fuel pipes (45) (new) (apply a counter-torque at "h") ; Tightening to 2,5 ± 0,3 daN.m ; Using the tools [11], [12], [13], [14]
- The cylinder reference sensor (47) ; Tightening to 1 ± 0,1 daN.m
- The fuel return pipe (46)
- The clips (at "j")

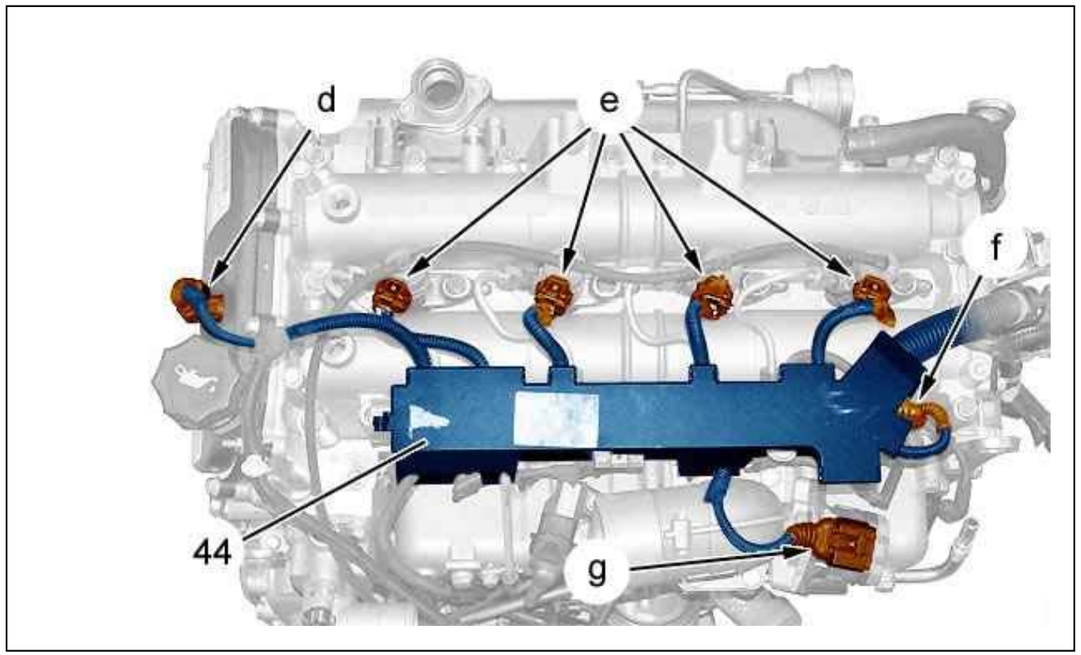

Figure : B1BM00GD

Clip on the engine harness support (44).
Reconnect the connectors (at "d", "e", "f", "g").

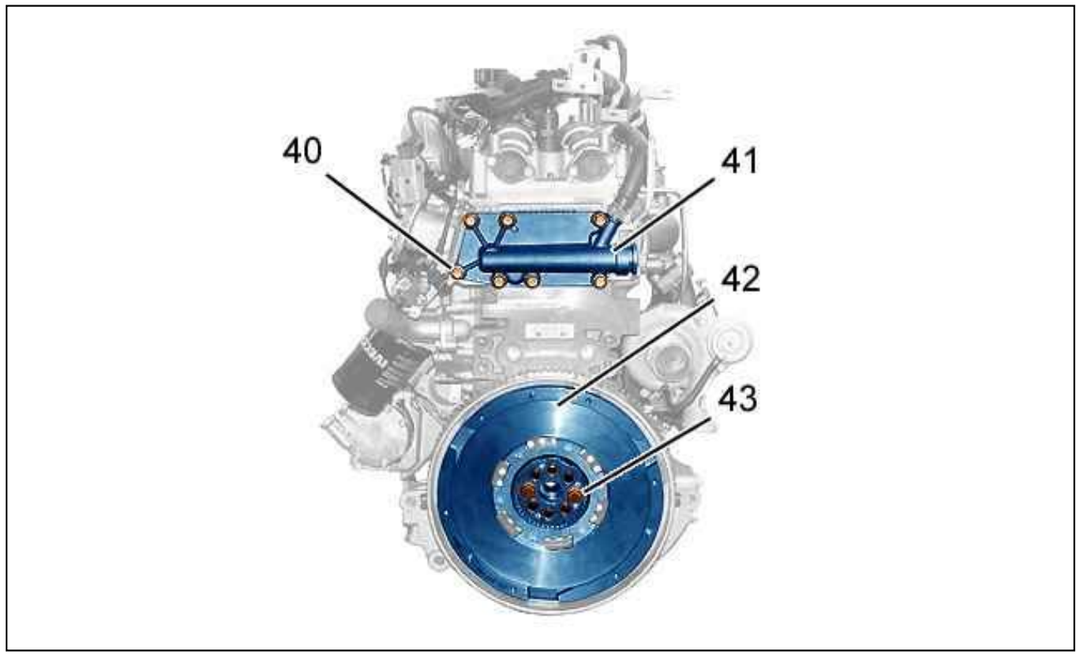

Figure : B1BM00FD

Refit the double flywheel (42).
Fit :

- The tool [6]
- The 8 bolts (43) (new) ; Pre-tighten to 3 ± 0,390 daNm, then angular tightening 1 ± 1°
- The clutch mechanism ; Using the tools [7], [8]

Remove the tool [6].
Refit :

- The exhaust gas recycling duct (41) (new seal)
- The 7 bolts (40) ; Tighten to 2,5 ± 0,3 daN.m

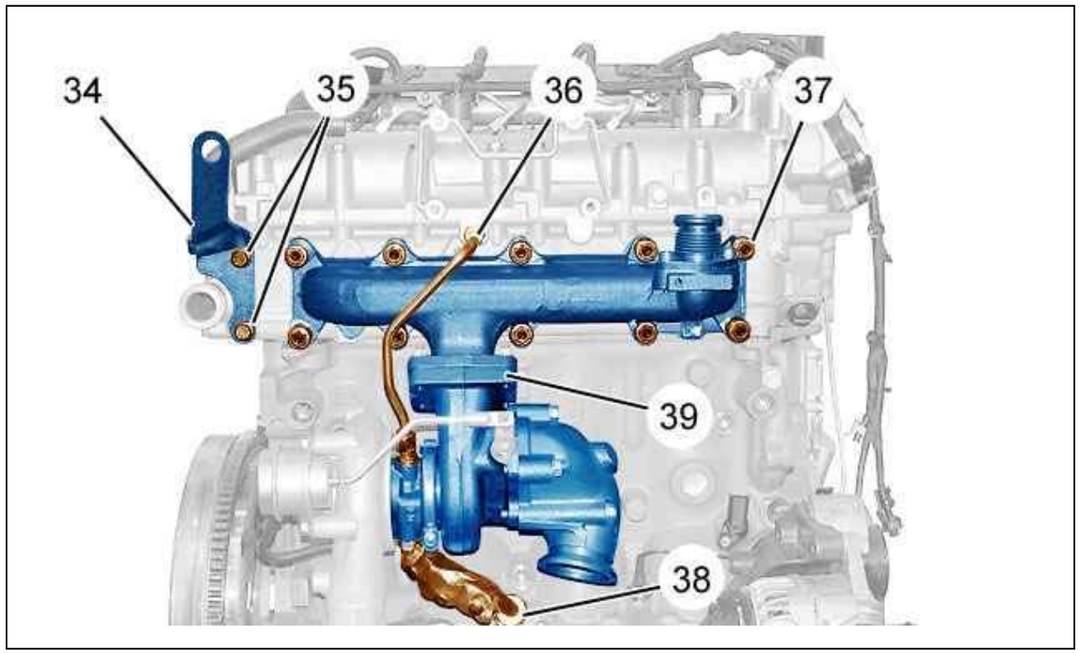

Figure : B1BM00ED

Refit :

- The exhaust manifold seal (new seal)
- The exhaust-turbocharger manifold assembly (39)
- The spacers with the nuts (37) ; Tighten to 2,5 ± 0,3 daN.m
- The lifting eye (34)
- The bolts (35) ; Tighten to 3 ± 0,3 daN.m
- The oil inlet union (36) ; Tighten to 3,5 ± 0,4 daN.m
- The oil outlet union (38) ; Tighten to 4,5 ± 0,5 daN.m

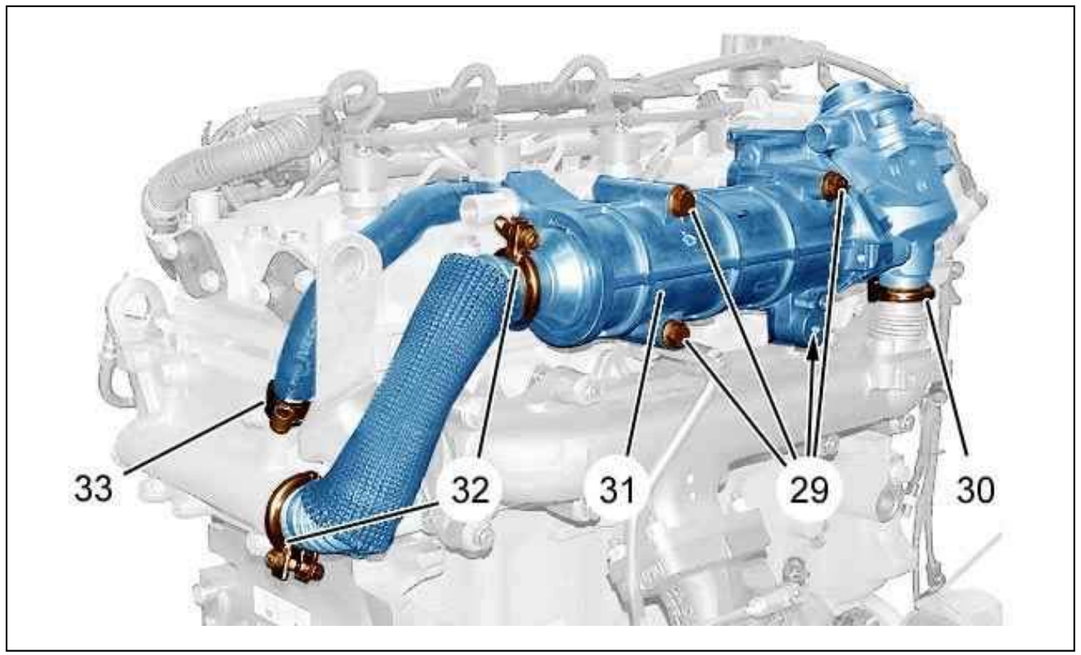

Figure : B1BM00DD

Refit :

- The EGR electrovalve with the heat exchanger (31)
- The bolts (29) ; Tighten to 2,5 ± 0,3 daN.m
- The clips (30), (32), (33) (new)

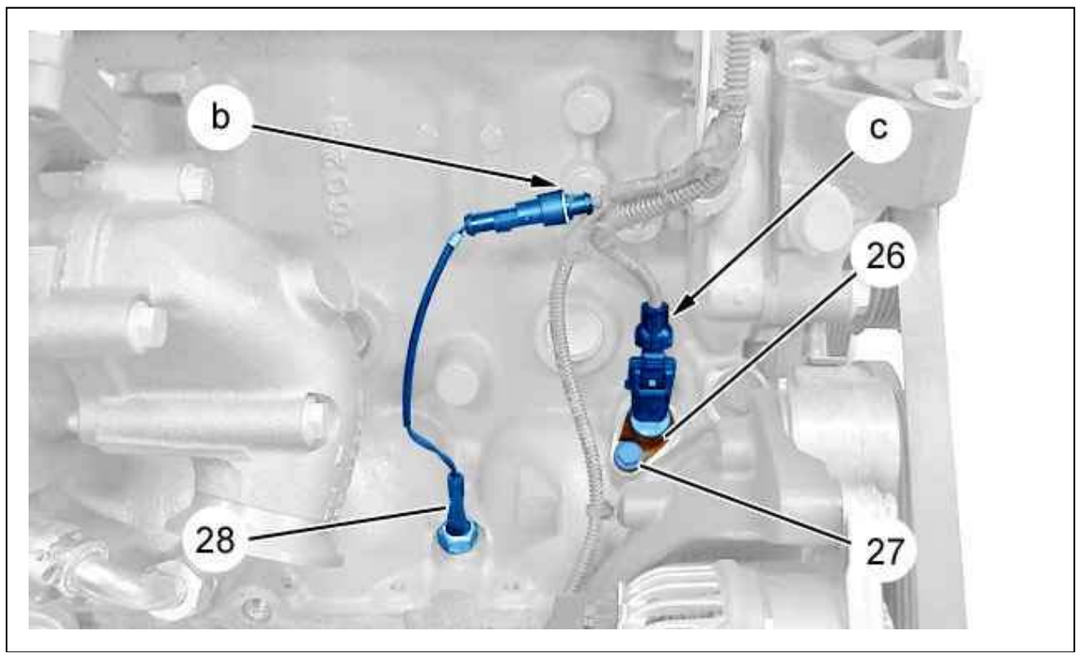

Figure : B1BM00CD

Refit :

- The oil level sensor (28) ; Tightening to 2,5 ± 0,3 daN.m
- The engine speed sensor (26)
- The (27) bolt ; Tighten to 1 ± 0,1 daN.m

Connect the connectors of the following components :

- Engine oil level sensor (28) (at "b")
- Engine speed sensor (26) (at "c")

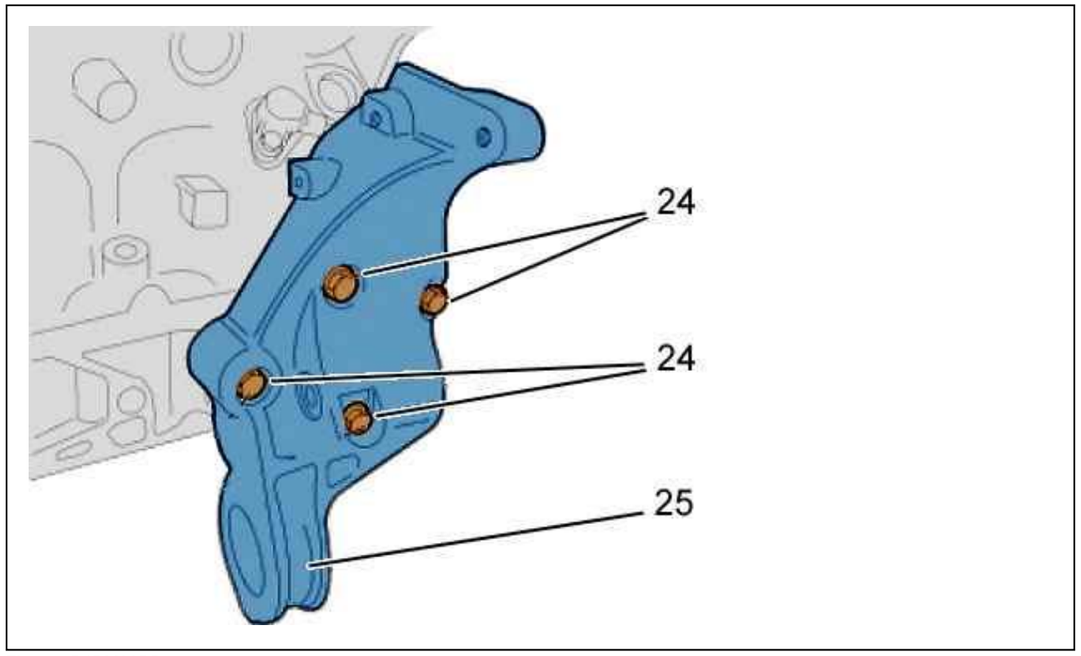

Figure : B1BM00BD

Refit :

- The alternator support (25)
- The bolts (24)

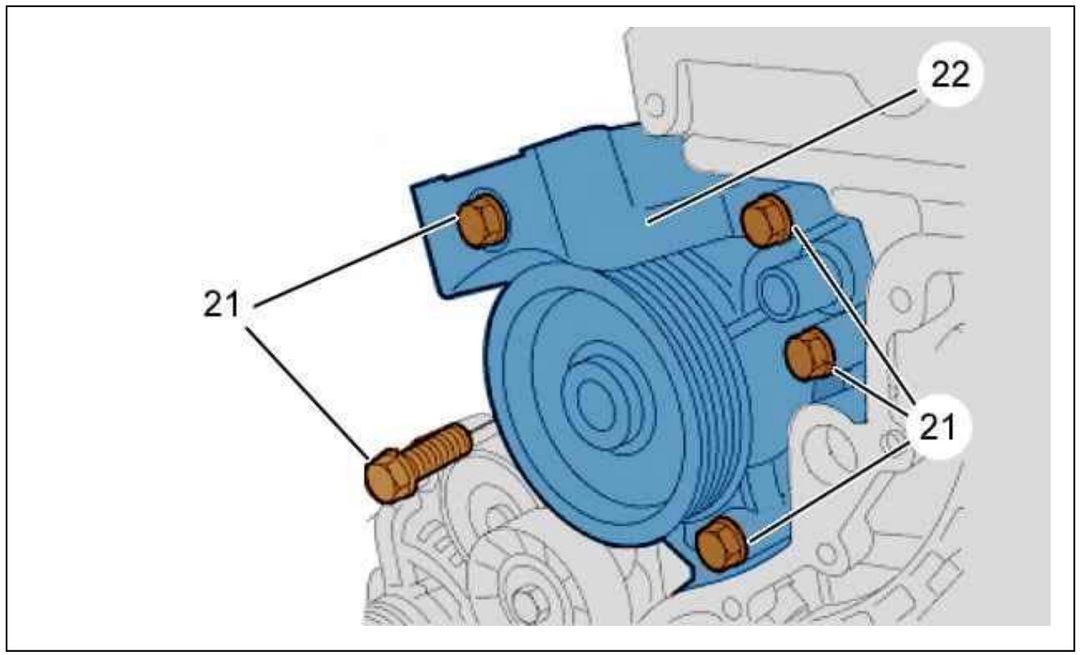

Figure : B1BM00AD

Refit :

- The coolant pump (22) (new seal)
- The bolts (21)

Tightening method for the screws (21) :

- Tightening to 5 ± 0,5 daN.m (screws M10)
- Tightening to 2,5 ± 0,5 daN.m (screws M8)

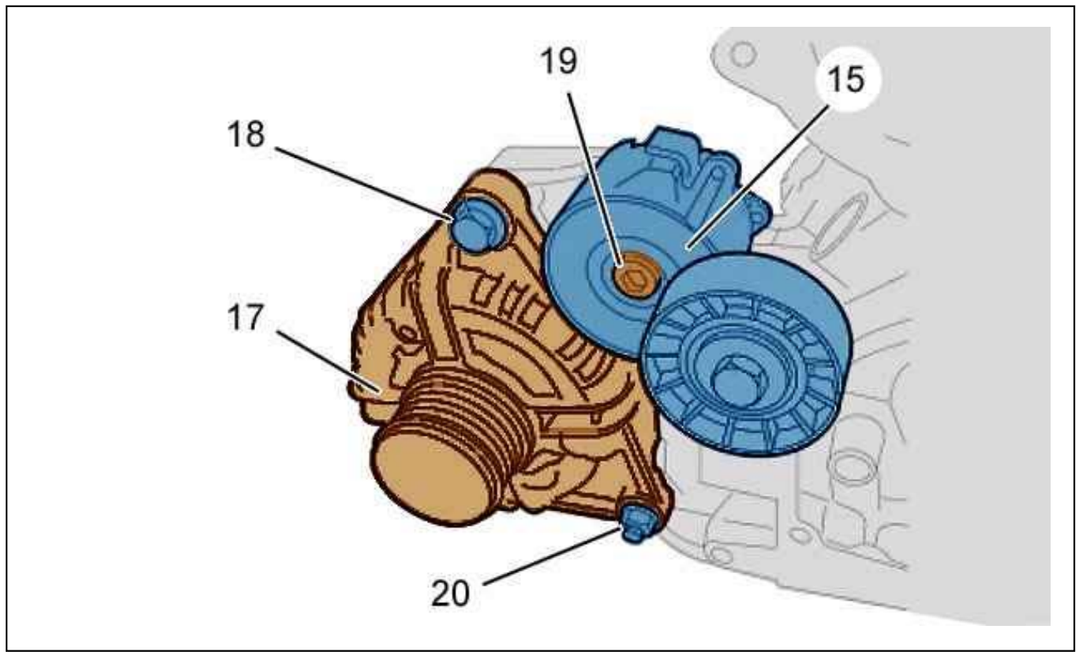

Figure : B1CM00LD

Refit :

- The alternator (17)
- The mountings (18), (20) ; Tighten to 5 ± 0,5 daN.m
- The dynamic roller tensioner (15)
- The (19) bolt ; Tighten to 2,5 ± 0,3 daN.m

Reconnect :

- The alternator (17) electrical harness
- The air conditioning compressor (13) electrical harness (according to equipment)

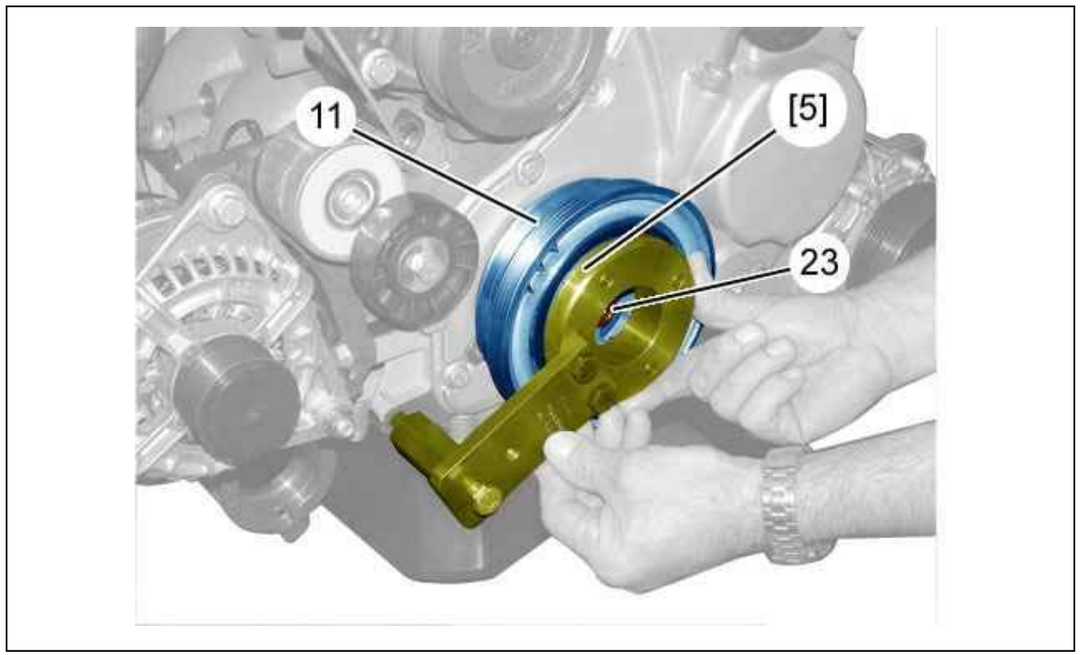

Figure : B1EM008D

Refit :

- The crankshaft pulley (11)
- The (23) bolt (Screw in without tightening)

Immobilise the pulley (11) ; Using tool [5].
Tighten the bolt (23) to 35 ± 3,5 daN.m.

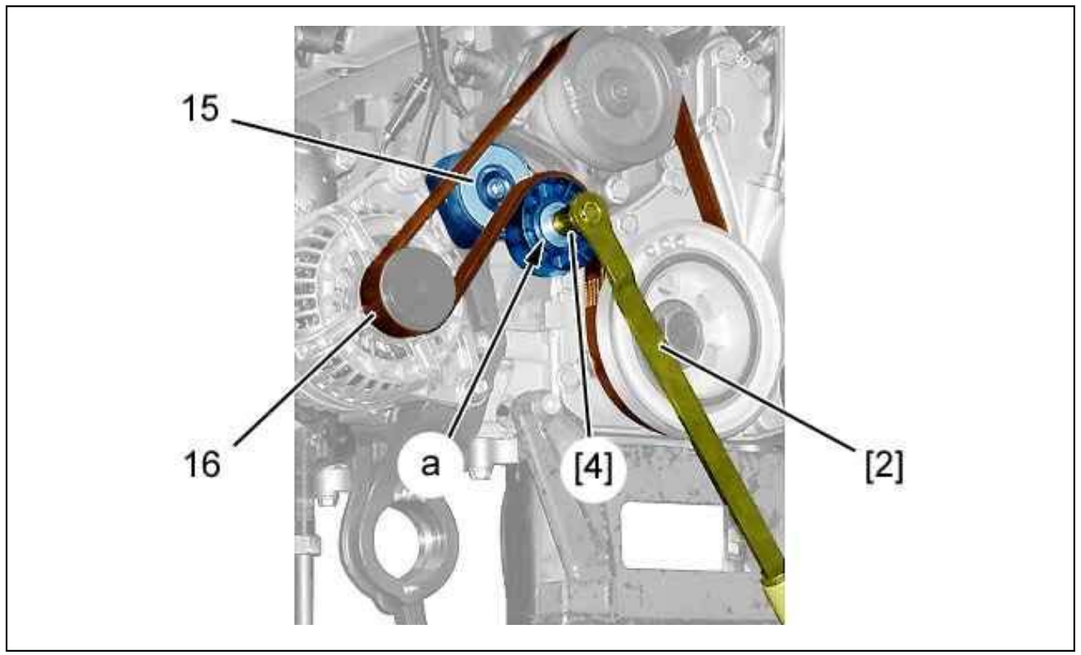

Figure : B1CM00KD

CAUTION : When re-using the elastic belts, refit them in accordance with the direction of fitting marked on removal.

Compress the dynamic roller tensioner (15) (at "a") (clockwise) ; Using the tools [[2], [4].
Refit the ancillary belt (16).

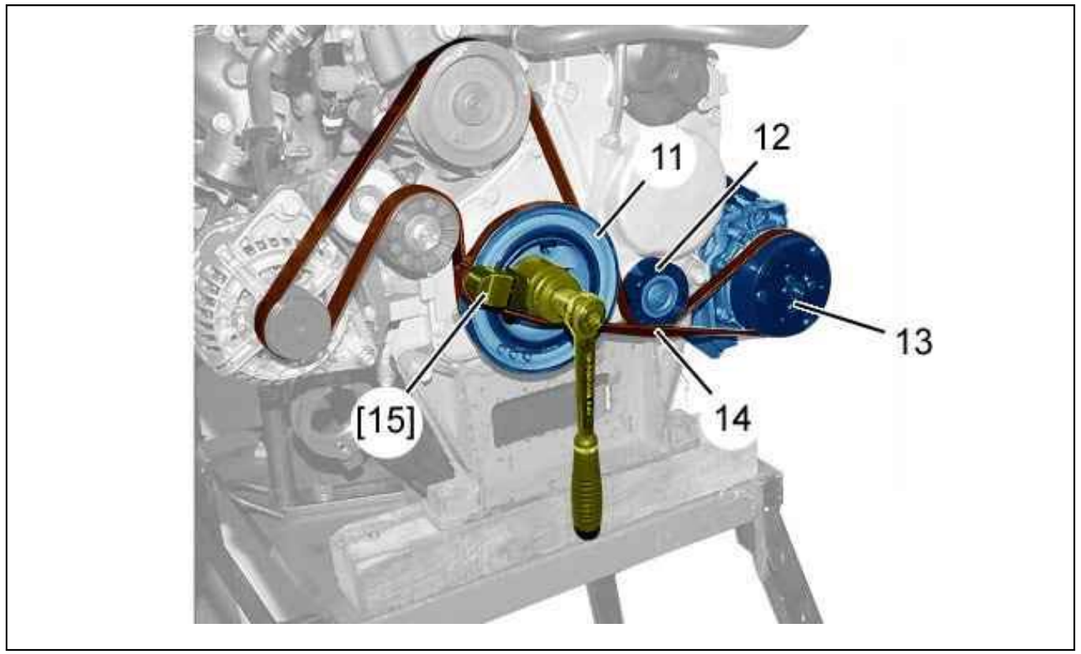

Figure : B1BM00HD

Refit :

- The tensioning roller (12) ; Tightening to 2,5 ± 0,3 daN.m
- The air-conditioning compressor (13) ; Tightening to 2,5 ± 0,3 daN.m
- The elastic ancillary belt (14)

Fit tool [1] on the pulley (11).
Turn the crankshaft pulley anti-clockwise until the elastic ancillary drive belt (14) is completely mounted on the crankshaft pulley (11) and the tool [15] disengages (anti clockwise).
Remove the tool [15].

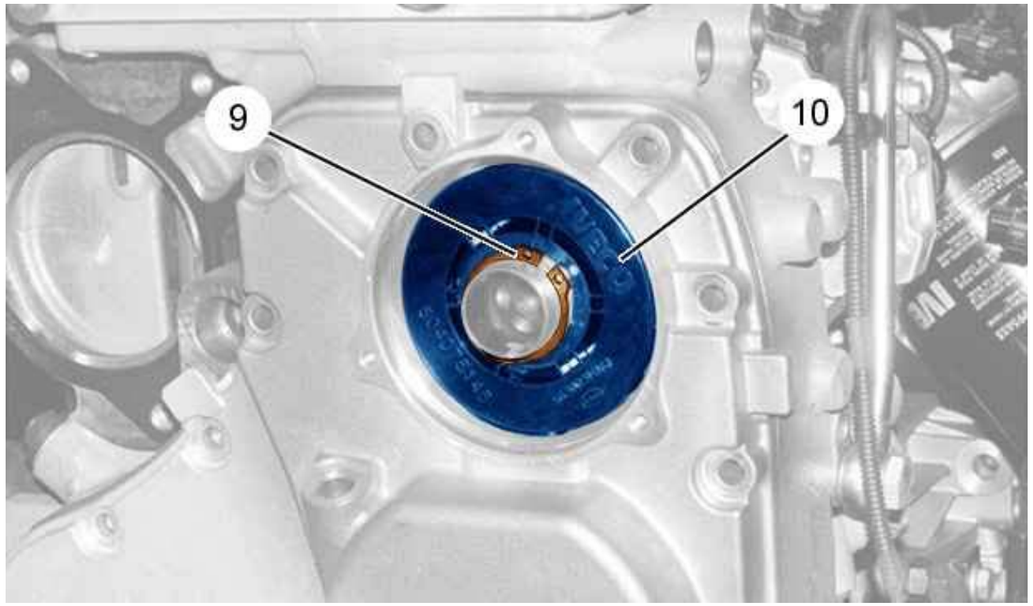

Figure : B1CM00HD

Refit :

- The filler orifice filter (10) (new)
- The circlip (9) (new)

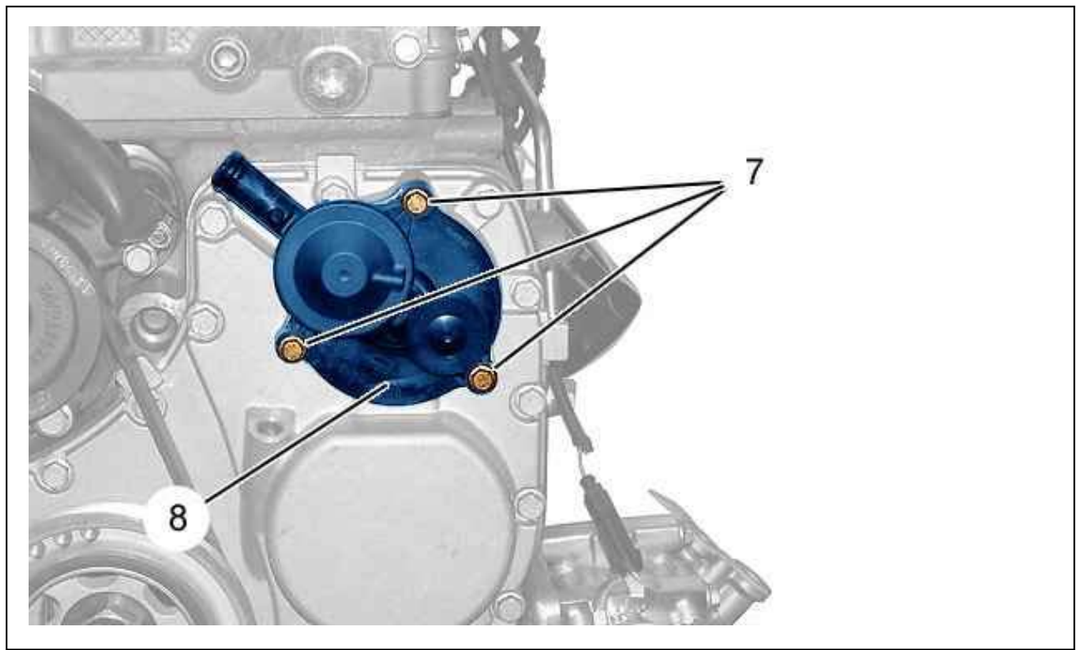

Figure : B1CM00GD

CAUTION : Lubricate the oil filler orifice seal .

Refit :

- The oil sediment unit (8) (new seal)
- The bolts (7) ; Tighten to 1 ± 0,1 daN.m

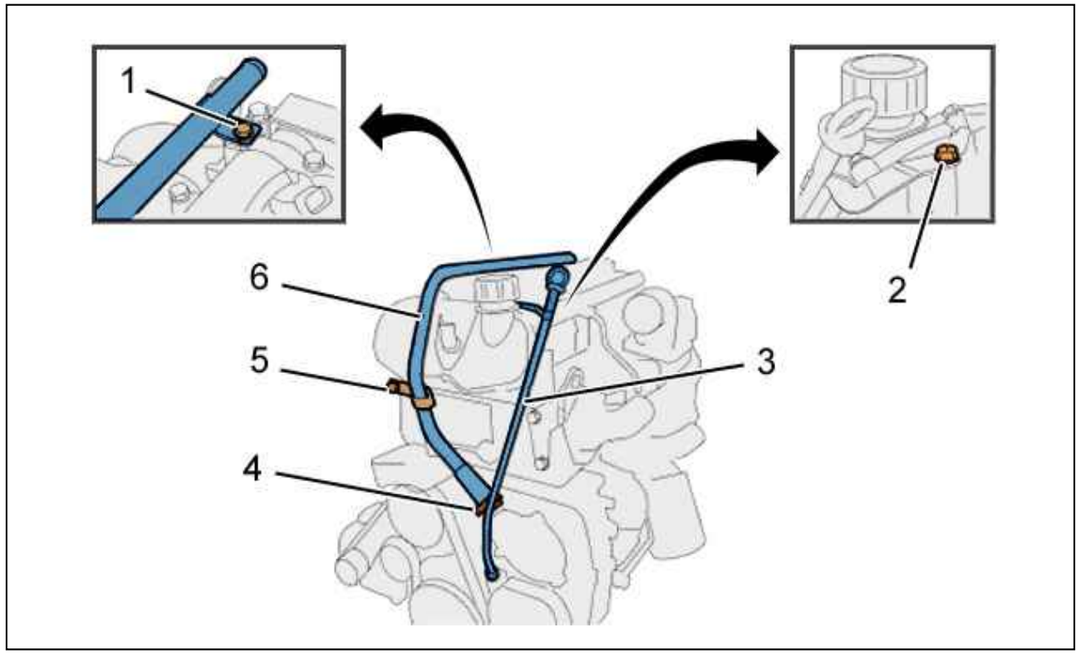

Figure : B1CM00FD

Refit :

- The tube (6)
- The bolts (1), (5) ; Tighten to 2,8 ± 0,3 daN.m
- The clip (4) (new)
- Oil dipstick tube (3) (new seal)
- The (2) bolt ; Tighten to 1 ± 0,1 daN.m

REMOVING - REFITTING : CAMSHAFTS

ESSENTIAL : Observe the safety and cleanliness recommendations .

1. Tooling

tool	Reference	Designation
 Figure : E5AB0XIT	[0191-B]	camshaft gear setting rod

2. Removing

ESSENTIAL : Respect the safety and cleanliness recommendations that are specific to high pressure diesel injection (HDi) engines.

Disconnect the ancillaries battery.
Place the vehicle on a 2-post lift.
Remove :

- The power unit assembly
- The accessories drive belt(s)

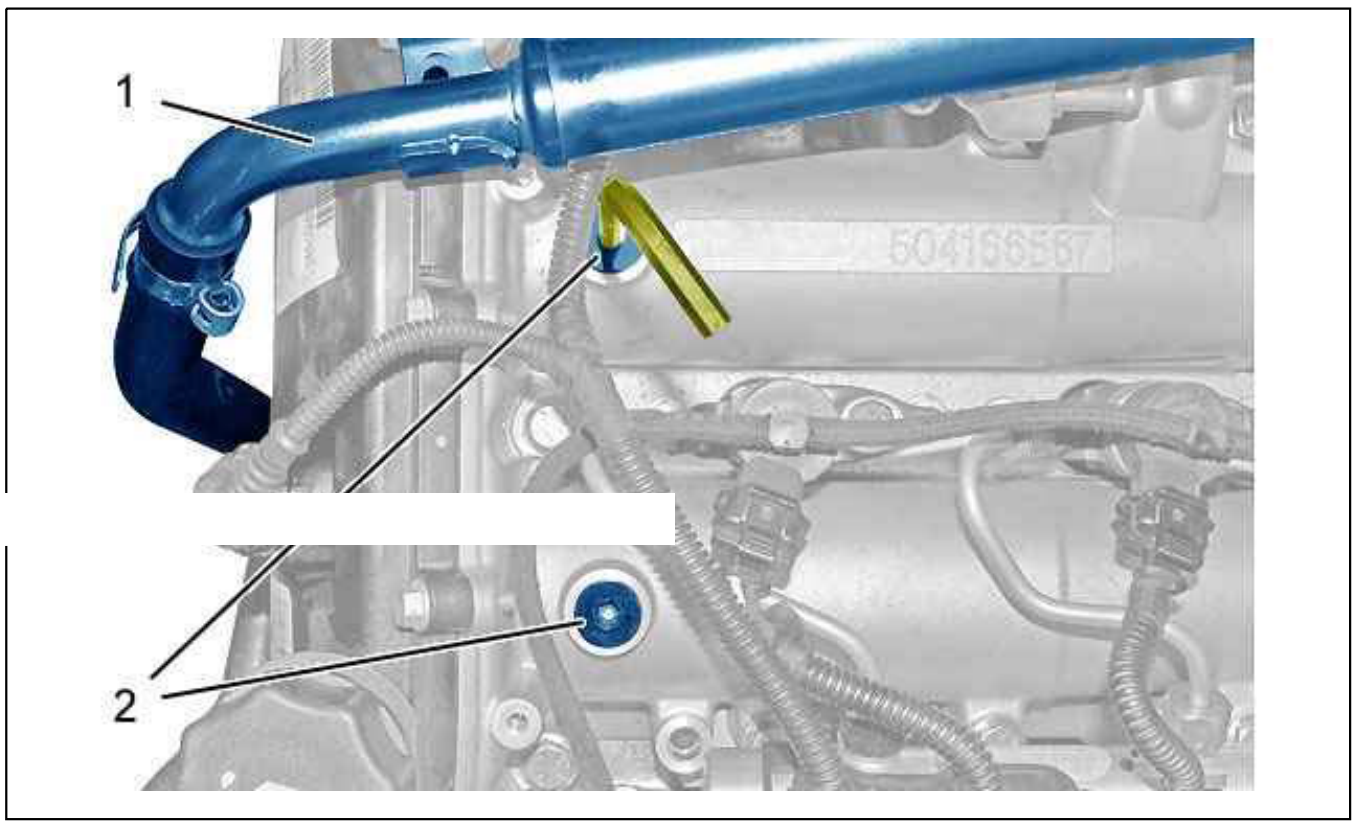

Figure : B1BPSGGD

Prise apart pipe (1).
Remove the 2 camshaft main bearing cap casing plugs (2).

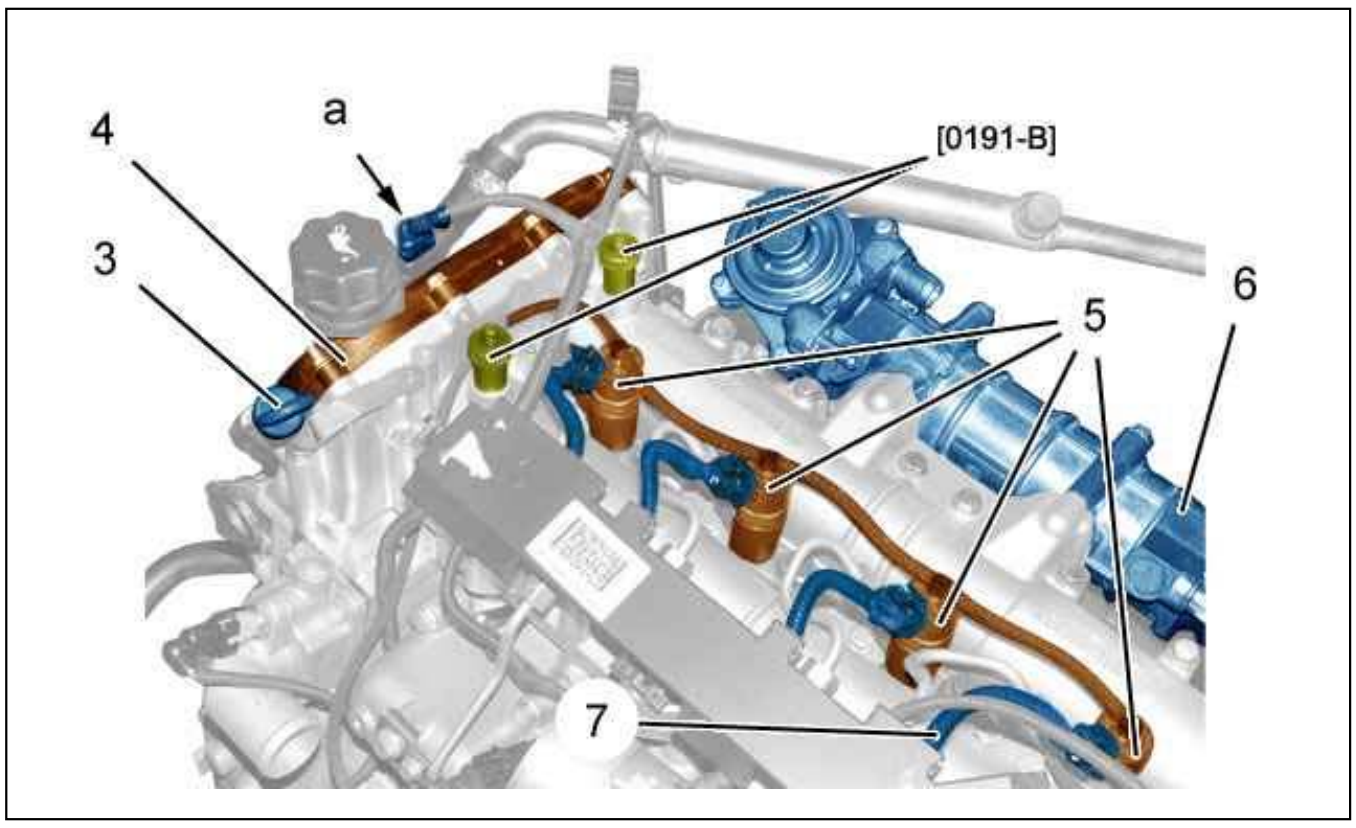

Figure : B1DG0OQD

Rotate the crankshaft until the tools [0191-B] engage in the camshafts .

N.B. : The tools [0191-B] must screw into the camshaft main bearing cap casing .

Disconnect the connector (at "a").
Remove :

- The top timing cover (4)
- The dipstick (3)
- The upper timing chain
- The injectors (5) for diesel engines
- The exhaust gas recycling valve and heat exchanger (6) assembly

Move aside the engine harness (7).

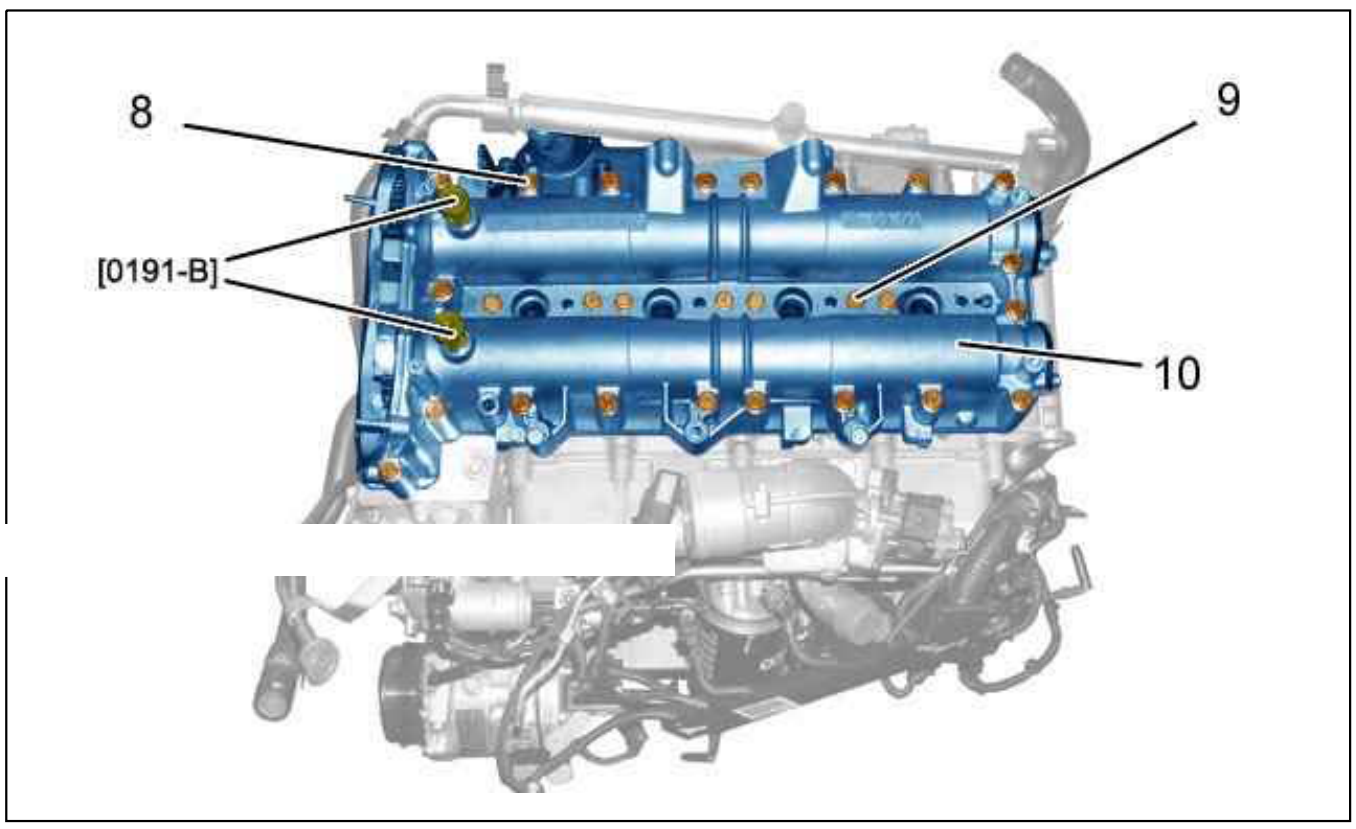

Figure : B1DG0OTD

Remove :

- The 20 bolts (8)
- The 7 bolts (9)
- The camshaft carrier and camshaft (10) assembly
- The camshaft carrier seal

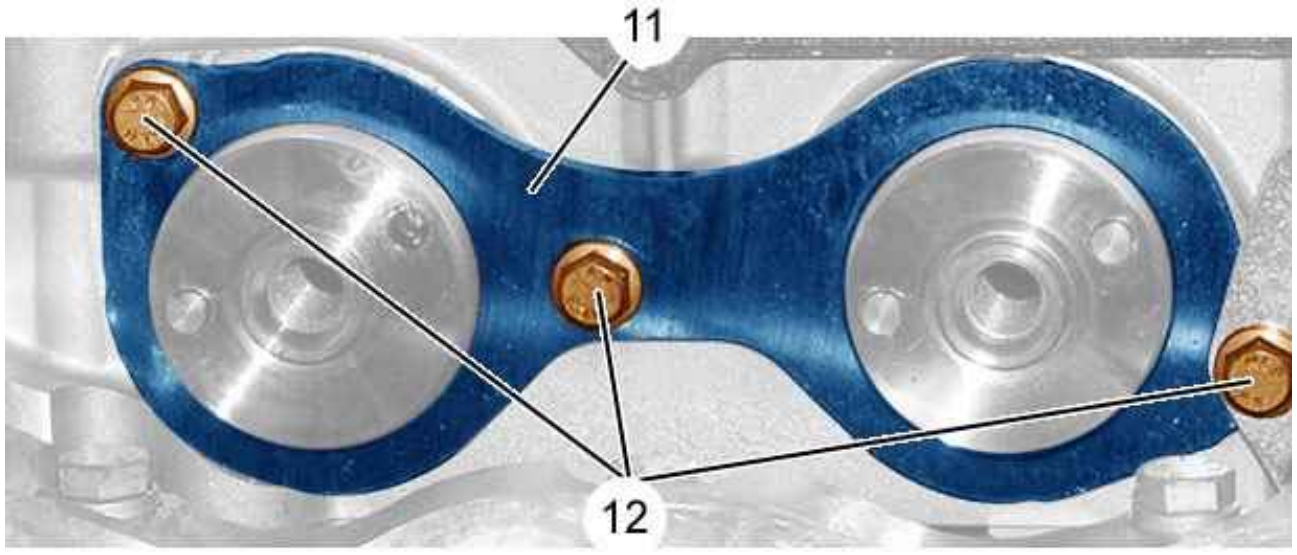

Figure : B1DP29MD

Remove :

- The bolts (12)
- The bracket (11)

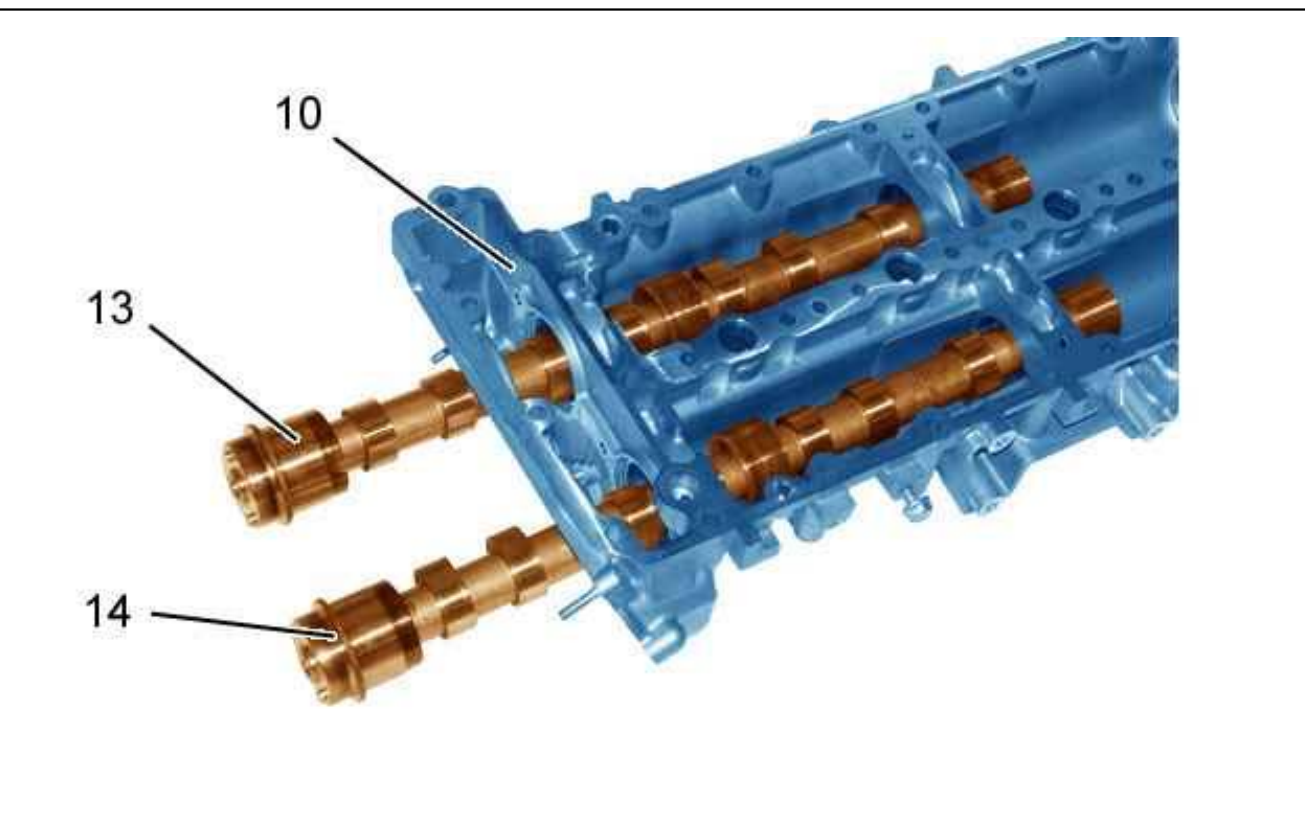

Figure : B1DP29ND

- The tools [0191-B]
- The exhaust camshaft (14)
- The inlet camshaft (13)

3. Refitting

CAUTION : Observe the tightening torque .

Refit in the camshaft carrier (10) :

- The exhaust camshaft (14)
- The inlet camshaft (13)
- The bracket (11)
- The bolts (12)
- The tools [0191-B]

N.B. : The exhaust camshaft (14) has a single sprocket drive dog .

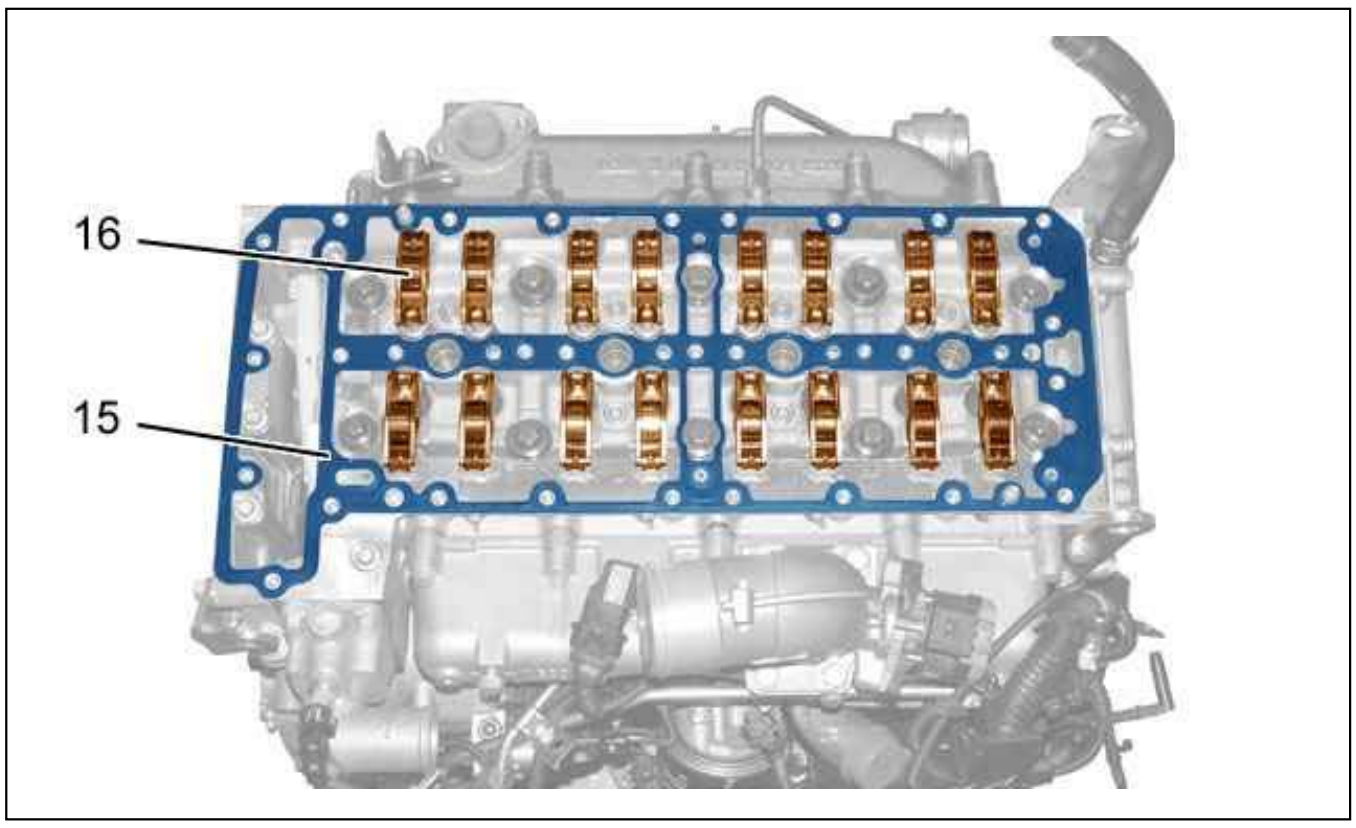

Figure : B1DP29PD

CAUTION : Check the positioning of the hydraulic follower and roller rocker (16) assemblies.

Refit :

- The new camshaft carrier (15) seal
- The camshaft carrier (10) and camshaft (13) ; (14) assembly
- The 20 bolts (8)
- The 7 bolts (9)
- The injectors (5) for diesel engines
- The upper timing chain
- The exhaust gas recycling valve and heat exchanger (6) assembly
- The casing (4)
- The timing cover fixings (4)
- The dipstick (3)

Remove the tools [0191-B].

Refit :

- The 2 plugs (2) on the camshaft main bearing cap casing
- The accessories drive belt(s)
- The power unit assembly

CAUTION : Perform the operations that are required following a reconnection of the ancillaries battery .

Reconnect the ancillaries battery.

REMOVING - REFITTING : CYLINDER HEAD

ESSENTIAL : Observe the safety and cleanliness recommendations .

1. Tooling

tool	Reference	Designation
[0188-L] 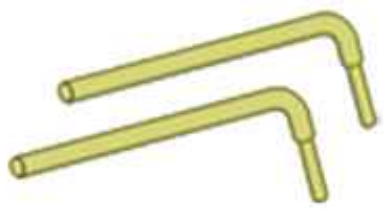 Figure : E5AB0AUT	[0188.L]	cylinder head releasing levers
[D360] [4069-T] 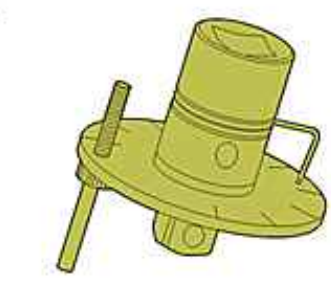 Figure : E5AB0UUT	[D360] [4069-T]	adaptor for angular tightening
[0188-T]  Figure : E5AB06IT	[0188 T]	plugs kit

2. Removing

ESSENTIAL : Respect the safety and cleanliness recommendations that are specific to high pressure diesel injection (HDi) engines .

Disconnect the ancillaries battery.
Place the vehicle on a 2-post lift.
Remove :

- The power unit assembly
- The accessories drive belt(s)
- The upper timing chain
- The camshaft carrier and camshaft assembly

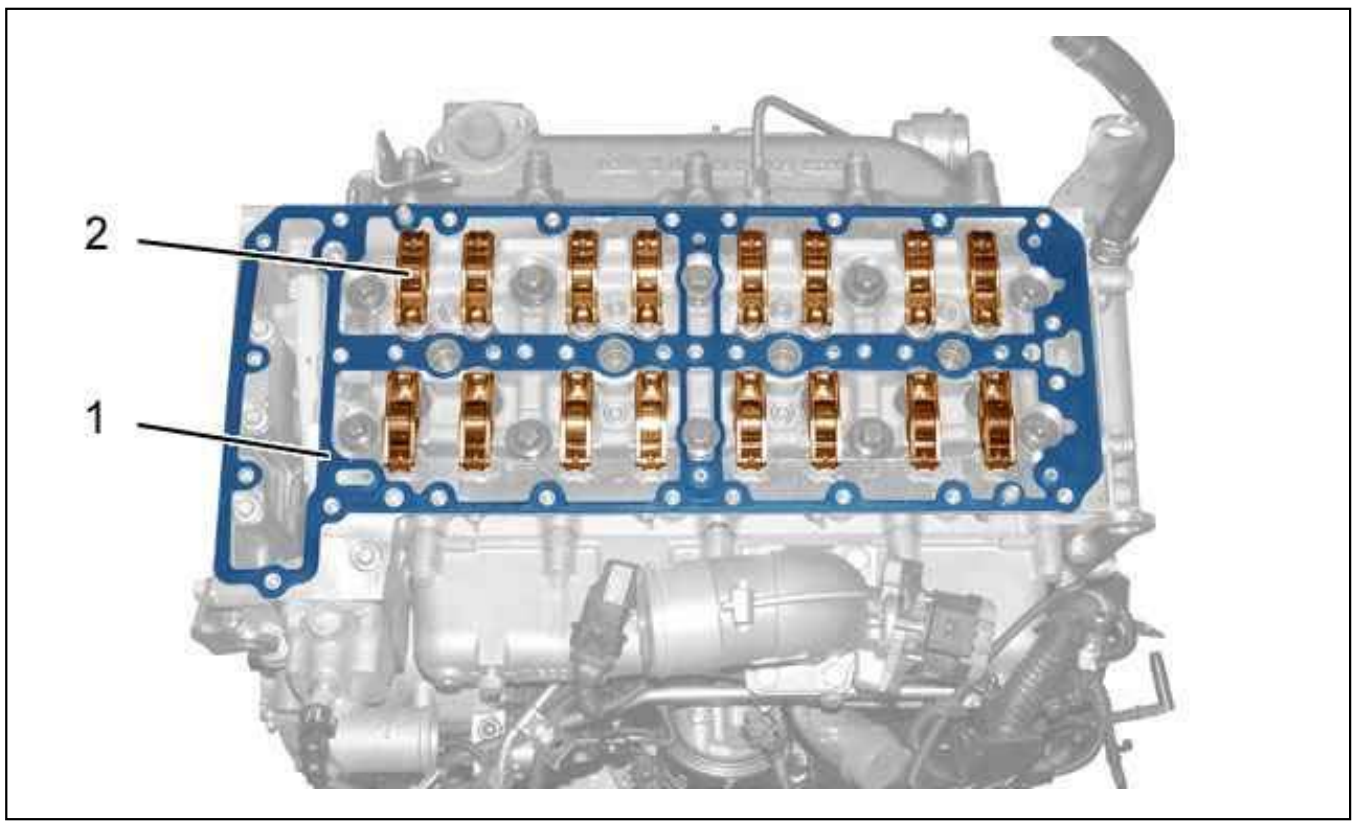

Figure : B1DP29HD

Remove :

- The seal (1)
- The hydraulic follower and roller rocker (2) assemblies

CAUTION : Mark the position of the followers and rockers (2).

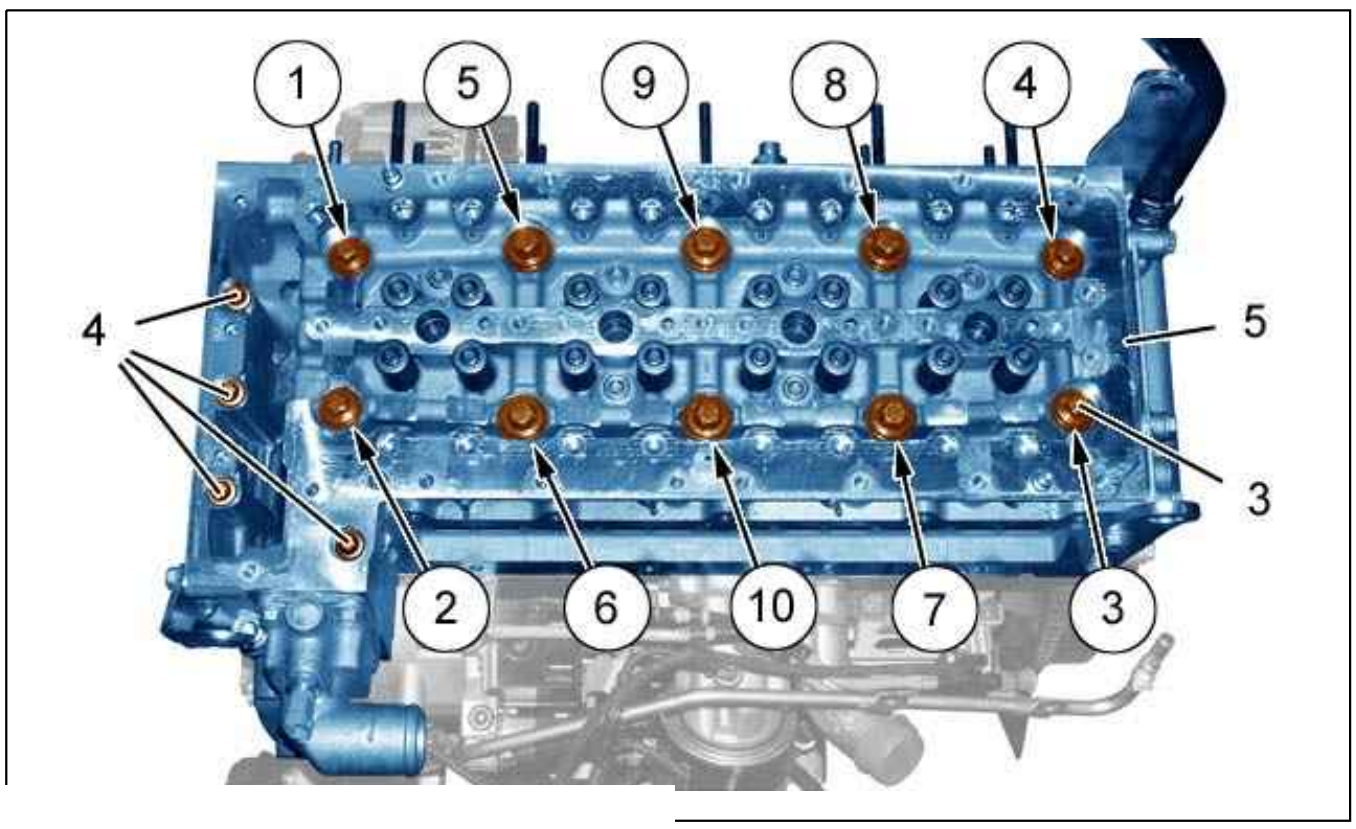

Figure : B1DP29JD

Remove :

- The cylinder head bolts (3) ; (order from 1 to 10)
- The cylinder head bolts (4)
- The cylinder head (5)
- The cylinder head gasket

N.B. : If necessary, tilt and release the cylinder head ; Using the levers [0188.L].

3. Cleaning to be carried out before refitting

CAUTION : Clean the gasket faces with an approved descaling product. Do not use a cutting or abrasive tool. The gasket faces must not have any traces o knocks or scores.

Clean out with a tap the threads in the crankcase which accommodate the cylinder head screws (M15 x 150 and M12 x 150 taps).
Brush the threads of the cylinder head bolts (3), (4).

4. Check

Check the flatness of the cylinder head (see the relevant operation).

N.B. : Maximum permissible bow = 0,2 mm.

5. Refitting

CAUTION : Adhere to the tightening torques .

CAUTION : On refitting, all removed seals must be replaced with new seals.

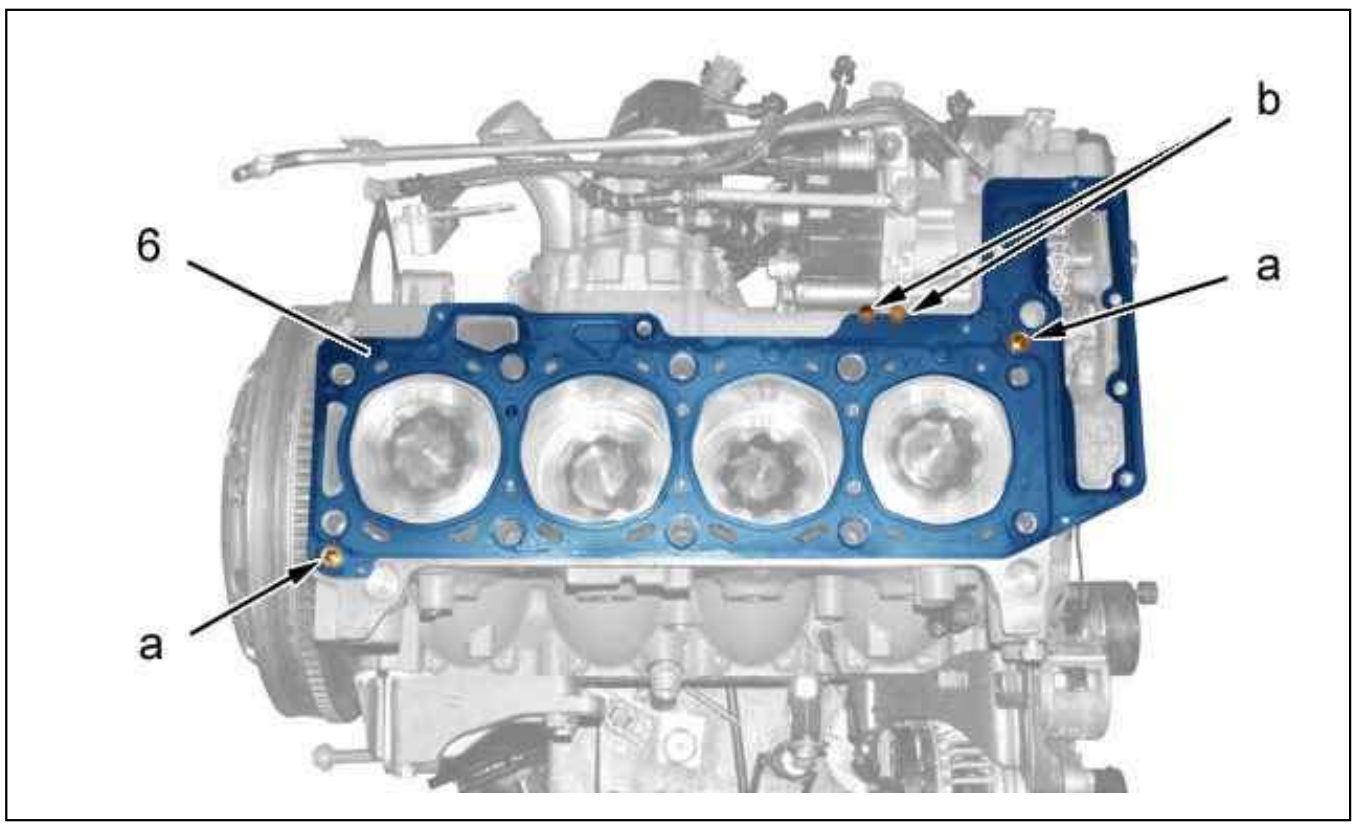

Figure : B1DP29KD

CAUTION : Check that the cylinder head to cylinder block centring pegs are in place (at "a").

Fit a new cylinder head gasket (6).

CAUTION : Position the marking notches "b" on the cylinder head gasket on the oil filter side.

Position the pistons at mid-stroke.
Refit :

- The cylinder head (5)
- The cylinder head bolts (3)
- The cylinder head bolts (4)

5.1. Cylinder head tightening

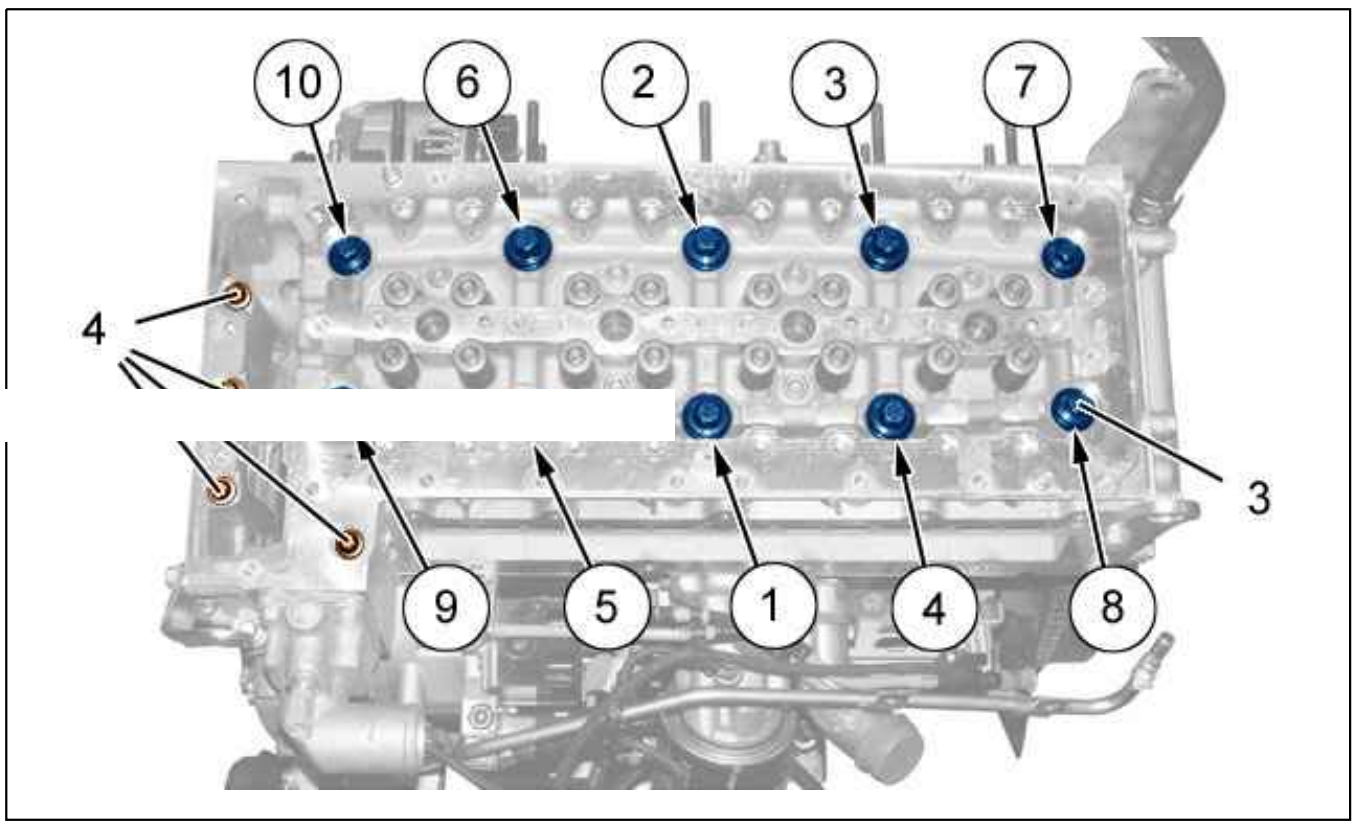

Figure : B1DP29LD

CAUTION : Follow the tightening sequence (order from 1 to 10).

Tightening method for the screws (3) :

- Tighten to the correct torque (Ref. 1 to 6)
- Tighten to the correct torque (Ref. 7 to 10)
- Angular pretightening ; (Ref. 1 to 10) ; Using tool [4069-T]
- Angular tightening ; (Ref. 1 to 6) ; Using tool [4069-T]
- Angular tightening ; (Ref. 7 to 10) ; Using tool [4069-T]

Tighten the bolts (4).

5.2. Refitting (continued)

Refit :

- The camshaft carrier and camshaft assembly
- The upper timing chain
- The accessories drive belt(s)
- The power unit assembly

CAUTION : Perform the operations that are required following a reconnection of the ancillaries battery.

Reconnect the ancillaries battery.

CHECK : SETTING THE VALVE TIMING

ESSENTIAL : Observe the safety and cleanliness recommendations .

1. Tooling

tool	Reference	Designation
 Figure : E5AB0XMT	[0191-2A]	crankshaft setting rod
 Figure : E5AB0XNT	[0191-2B]	camshaft gear setting rod
 Figure : E5AB0XOT	[0191-2K]	Accessories drive pulley immobilisation tool

2. Check

ESSENTIAL : Respect the safety and cleanliness recommendations that are specific to high pressure diesel injection (HDi) engines.

Place the vehicle on a 2-post lift.
Remove the front right-hand wheel.
Disconnect the battery.
Remove :

- The protective panel under the engine
- The front right mud guard
- The accessories drive belt(s) (according to equipment)

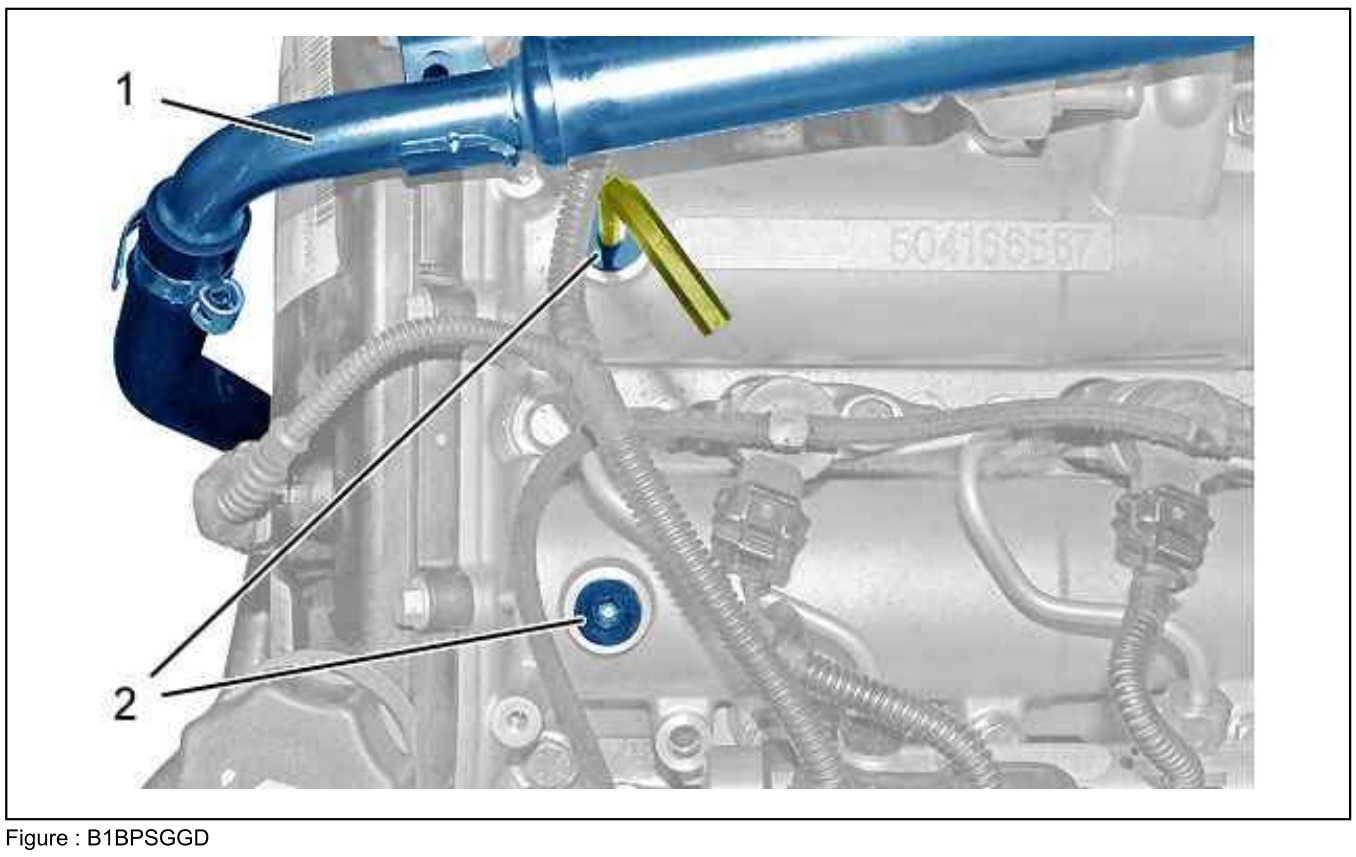

Figure : B1BPSGGD

Prise apart pipe (1).
Remove the 2 camshaft main bearing cap casing plugs (2).

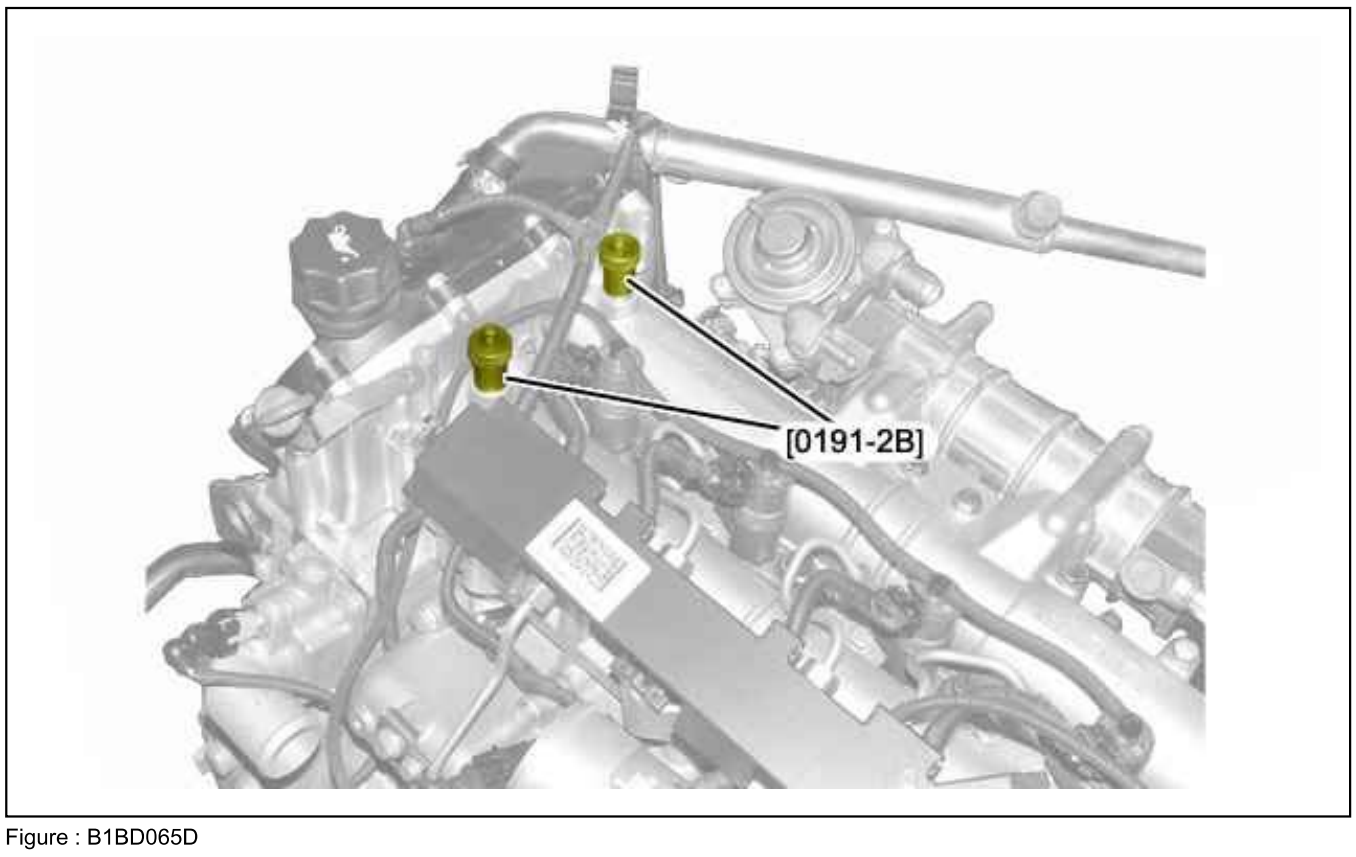

Figure : B1BD065D

Rotate the crankshaft until the tools [0191-2B] engage in the camshafts .

N.B. : The tools [0191-2B] must screw into the camshaft main bearing cap casing .

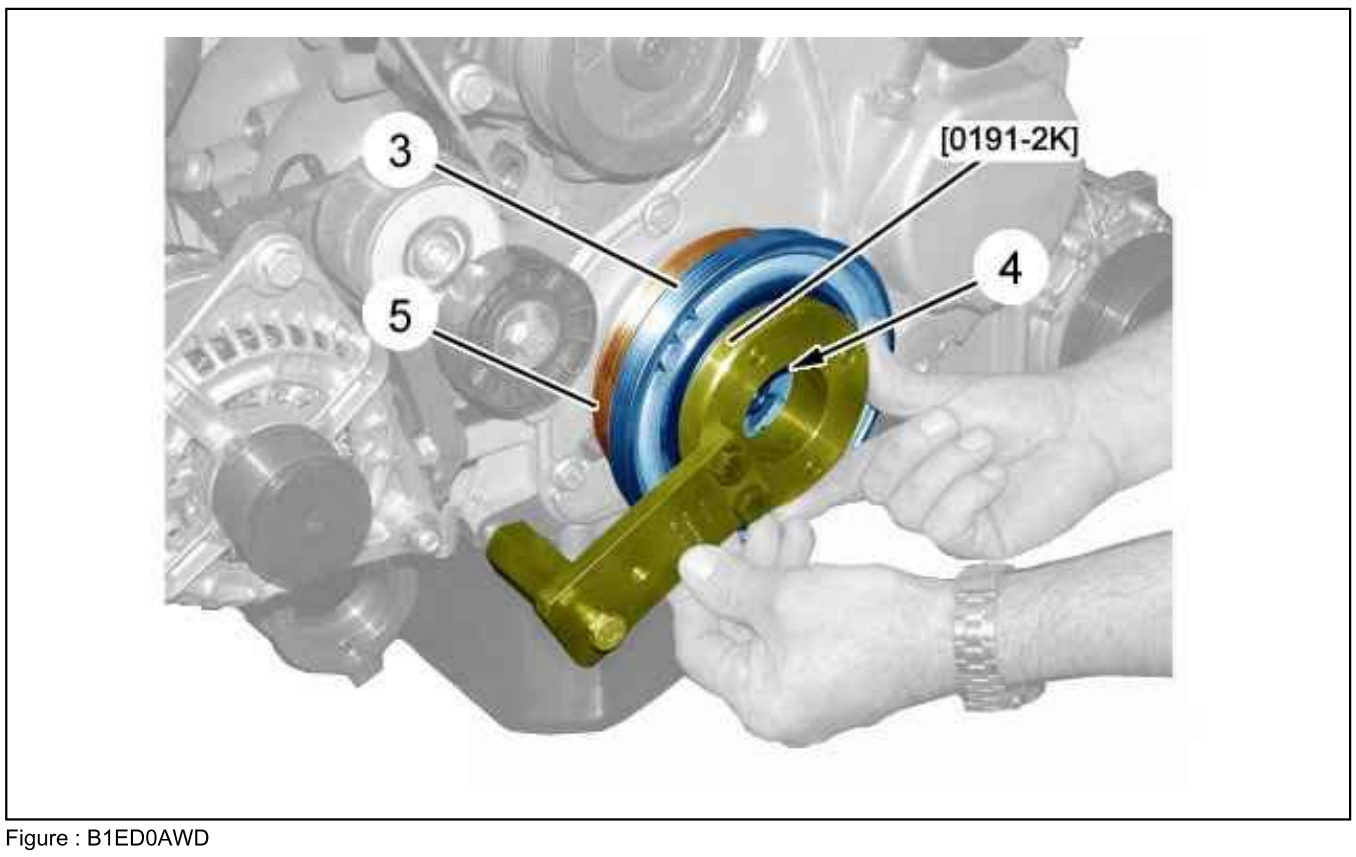

Figure : B1ED0AWD

Immobilise the accessories drive pulley (3) ; Using tool [0191-2K].
Remove :

- The (4) bolt

- The tool [0191-2K]
- The ancillary drive pulley (3)
- The cap (5)

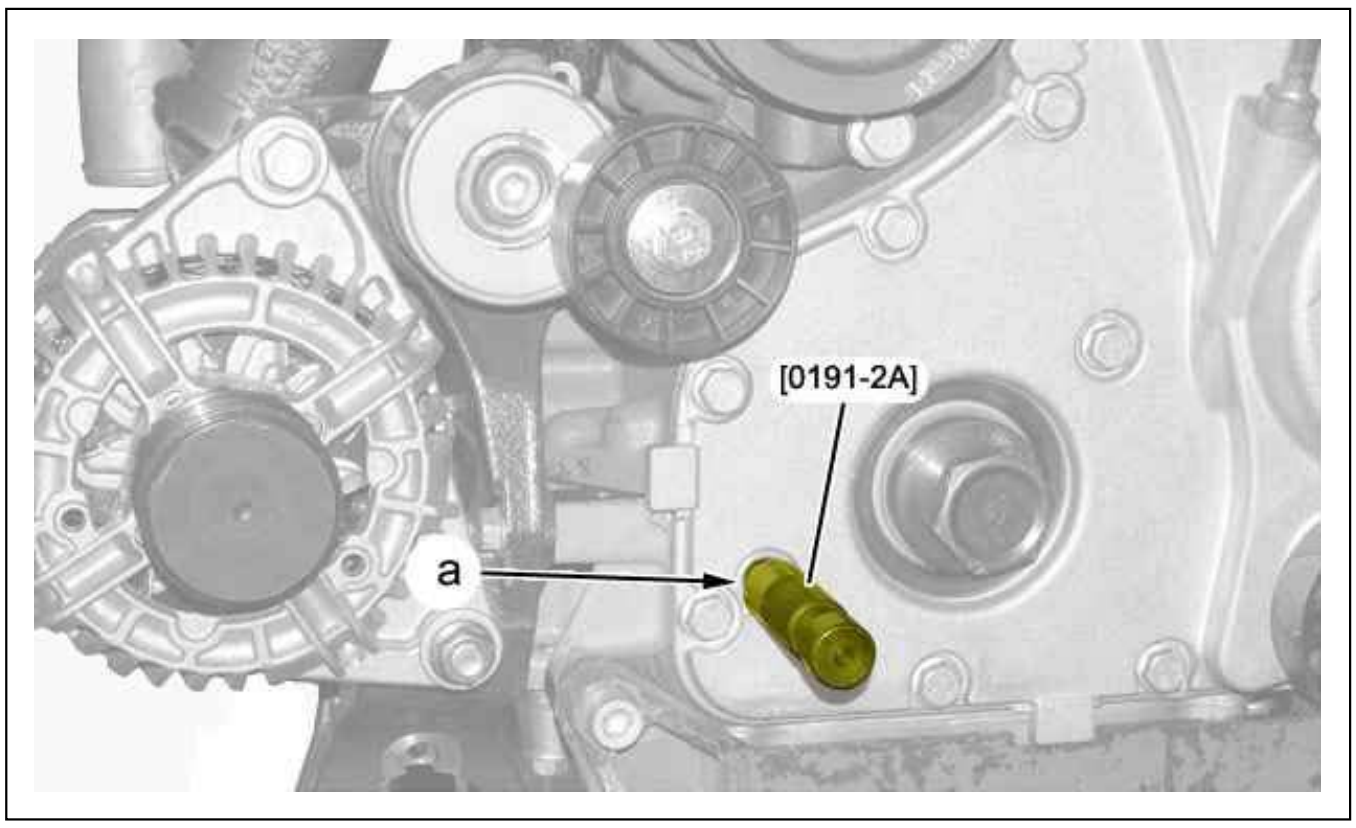

Figure : B1ED0AXD

CAUTION : The tool [0191-2A] must be able to screw in : If this is not possible, rotate the crankshaft in one direction or the other until the tool [0191-2A] screws in; If the angular clearance of the crankshaft does not permit the screwing in of the tool [0191-2A], repeat the setting of the valve timing.

Insert the tool [0191/2-A] (as "a").
Remove the tools [0191-2A], [0191-2B].
Reposition the tube (1).
Refit :

- The plugs (2), (5)
- The ancillary drive pulley (3)
- The (4) bolt

Fit the tool [0191-2K] .
Tighten the bolt (4) .
Remove the tool [0191-2K].
Refit :

- The accessories drive belt(s) (according to equipment)
- The front right mud guard
- The protective panel under the engine
- The front right wheel
- The vehicle to its wheels

CAUTION : Perform the operations to be carried out following reconnection of the battery.

Reconnect the battery.

REMOVING - REFITTING : TIMING CHAIN

ESSENTIAL : Observe the safety and cleanliness recommendations .

1. Tooling

Tools	Reference	Designation
 Figure : E5AB0UFT	[0191-2A]	crankshaft setting rod
 Figure : E5AB0UGT	[0191-2B]	camshaft gear setting rod
 Figure : E5AB0YOT	[0191-2K]	Accessories drive pulley immobilisation tool
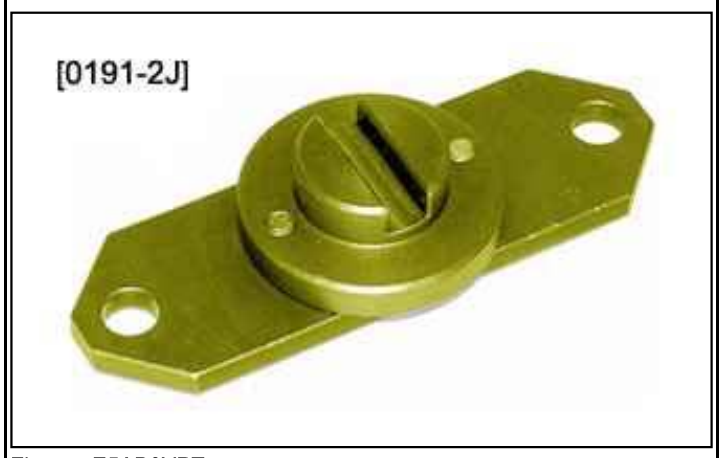 Figure : E5AB0YPT	[0191-2J]	Tool for immobilising the drive shaft of the power steering pump
	[0191-2S]	Timing cover centring pin



Figure : E5AB0YRT

2. Removing

ESSENTIAL : Respect the safety and cleanliness recommendations that are specific to high pressure diesel injection (HDi) engines.

CAUTION : After switching off the ignition, wait 15 minutes before disconnecting the battery (to guarantee that the initialisations of the various ECUs are memorised).

Place the vehicle on a 2-post lift.
Remove :

- The power unit assembly (see the relevant operation)
- The auxiliary equipment drive belt (see the relevant operation)

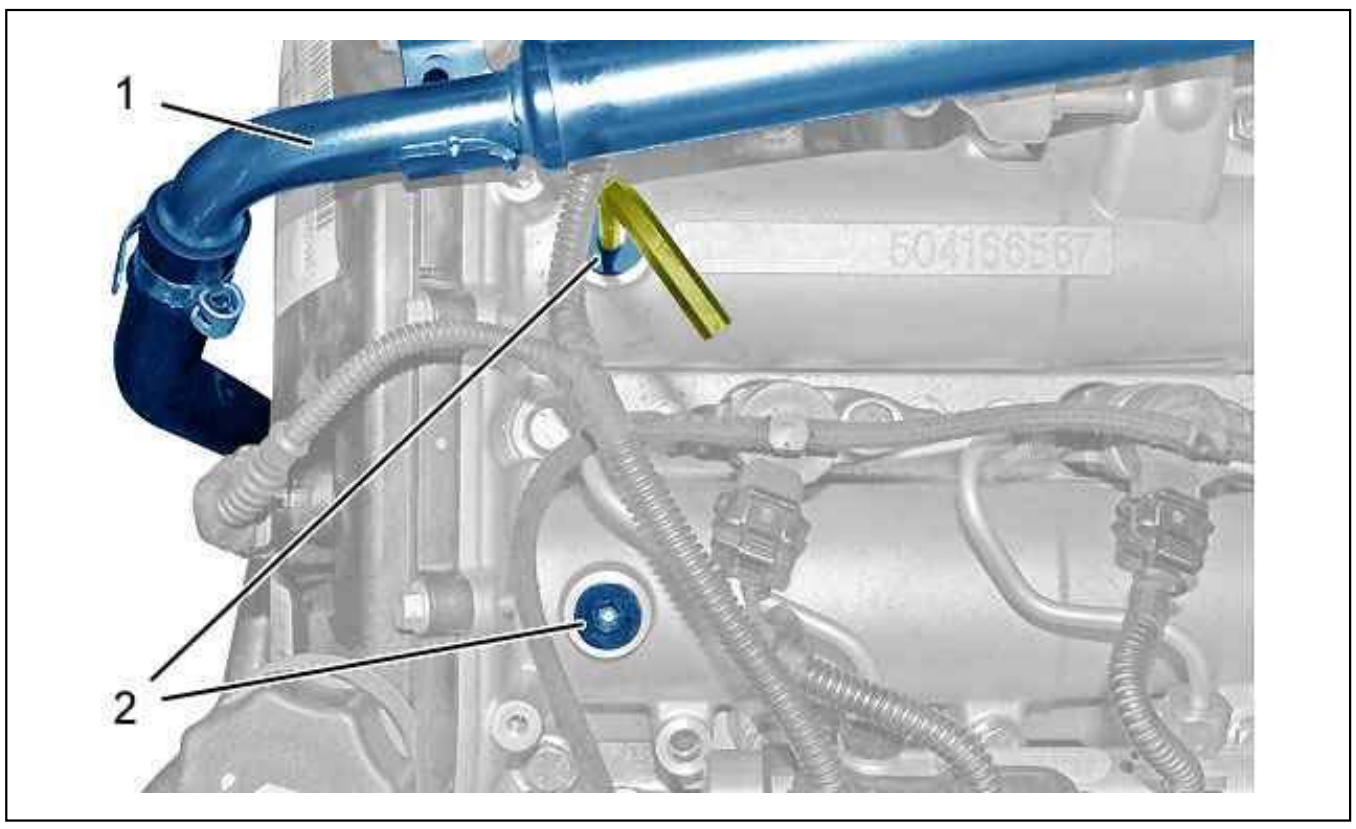

Figure : B1BPSGGD

Remove the 2 camshaft main bearing cap casing plugs (2).

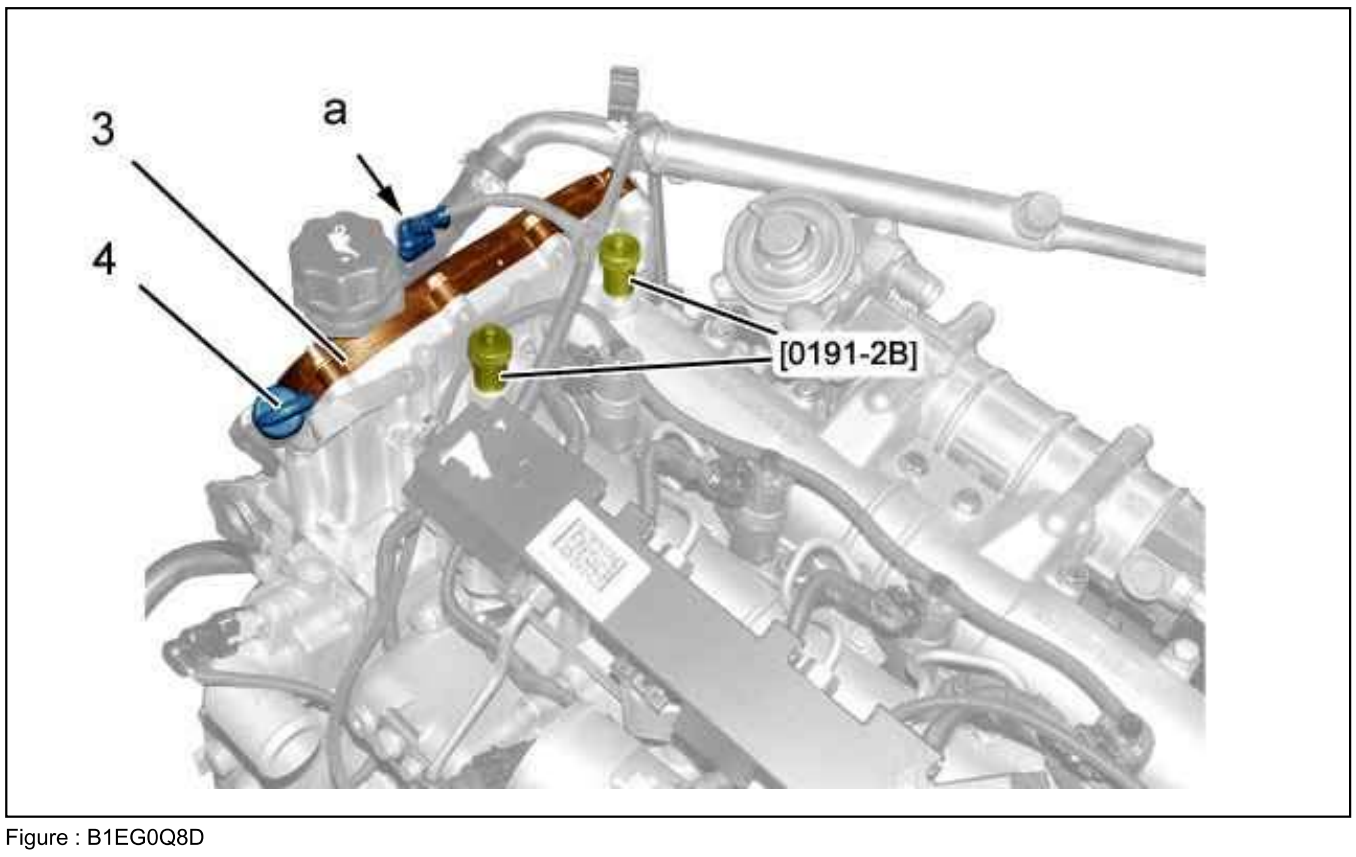

Figure : B1EG0Q8D

N.B. : The tools [0191-2B] must screw into the camshaft main bearing cap casing .

Rotate the crankshaft until the tools [0191-2B] engage in the camshafts .

Disconnect the connector (as "a").
Remove :

- The dipstick (4)
- The casing (3)

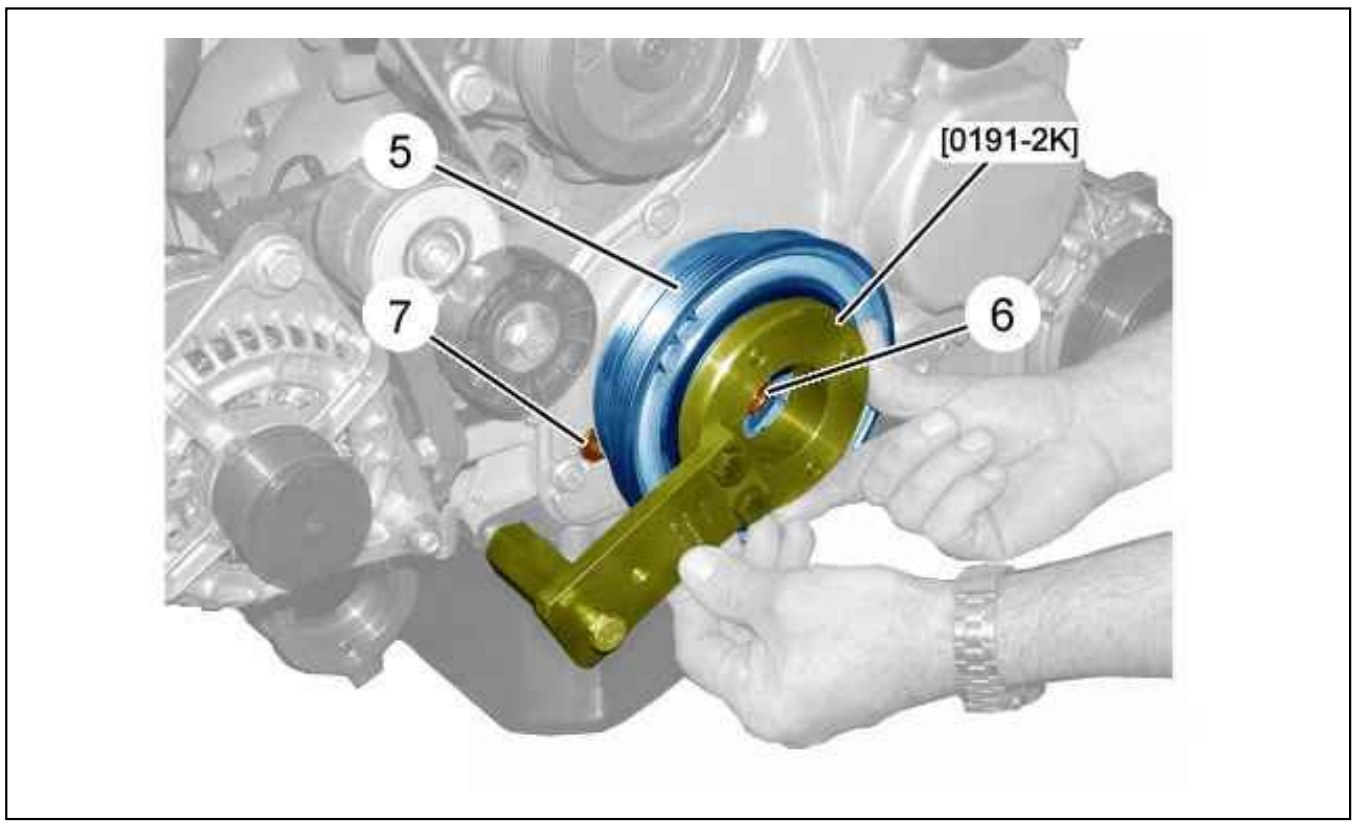

Figure : B1EG0QBD

Immobilise the accessories drive pulley (5) ; Using tool [0191-2K].
Remove :

- The bolt (6)
- The ancillary drive pulley (5)
- The cap (7)

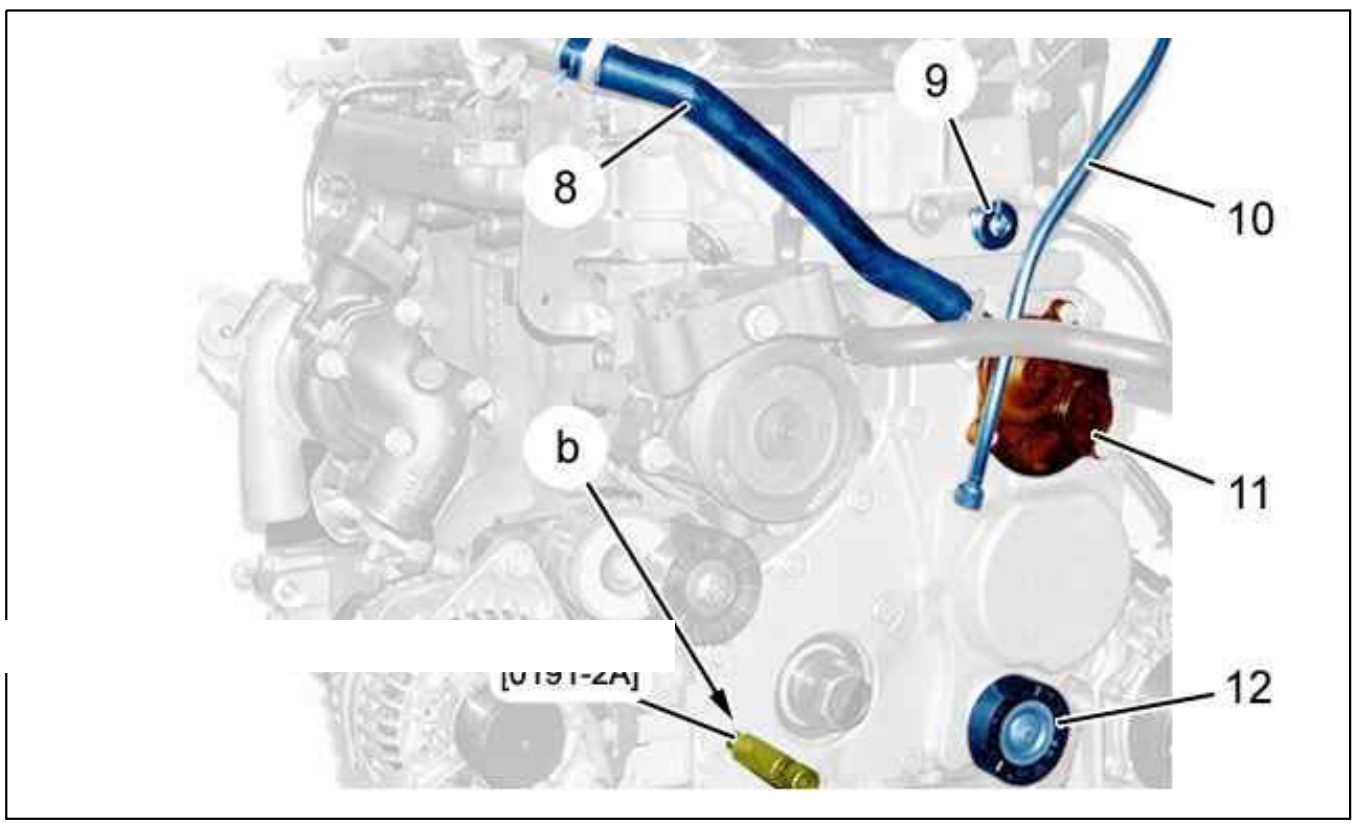

Figure : B1EG0QGD

Insert the tool [0191-2A] (at "b") ; Fit the crankshaft setting rod ; Using tool [0191-2A].
Remove :

- The tube (8)
- The cap (9)
- The dipstick guide (10)
- The cover (11)
- The tensioning roller (12)

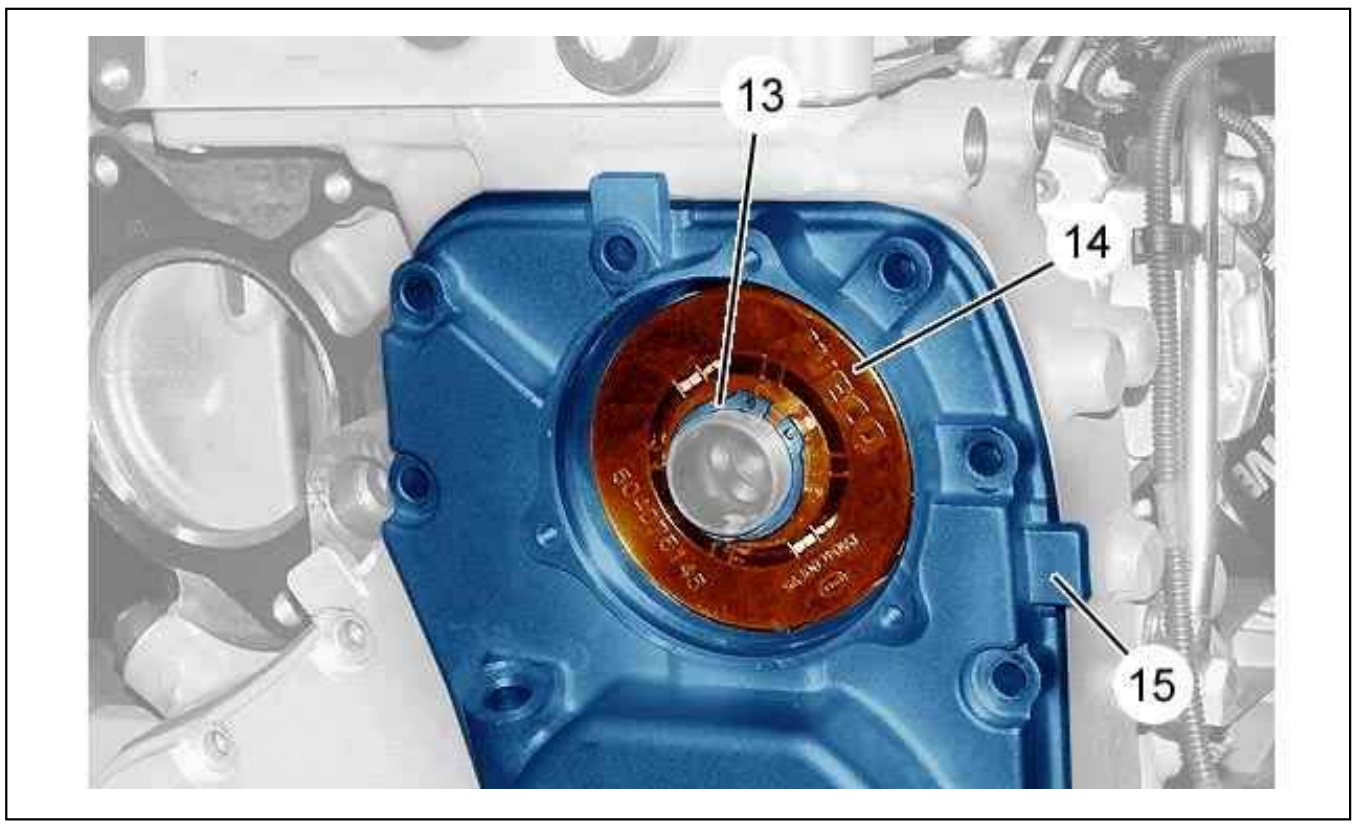

Figure : B1EP205D

Remove :

- The circlip (13)
- Filter (14)
- The tool [0191-2A]
- The timing cover (15)

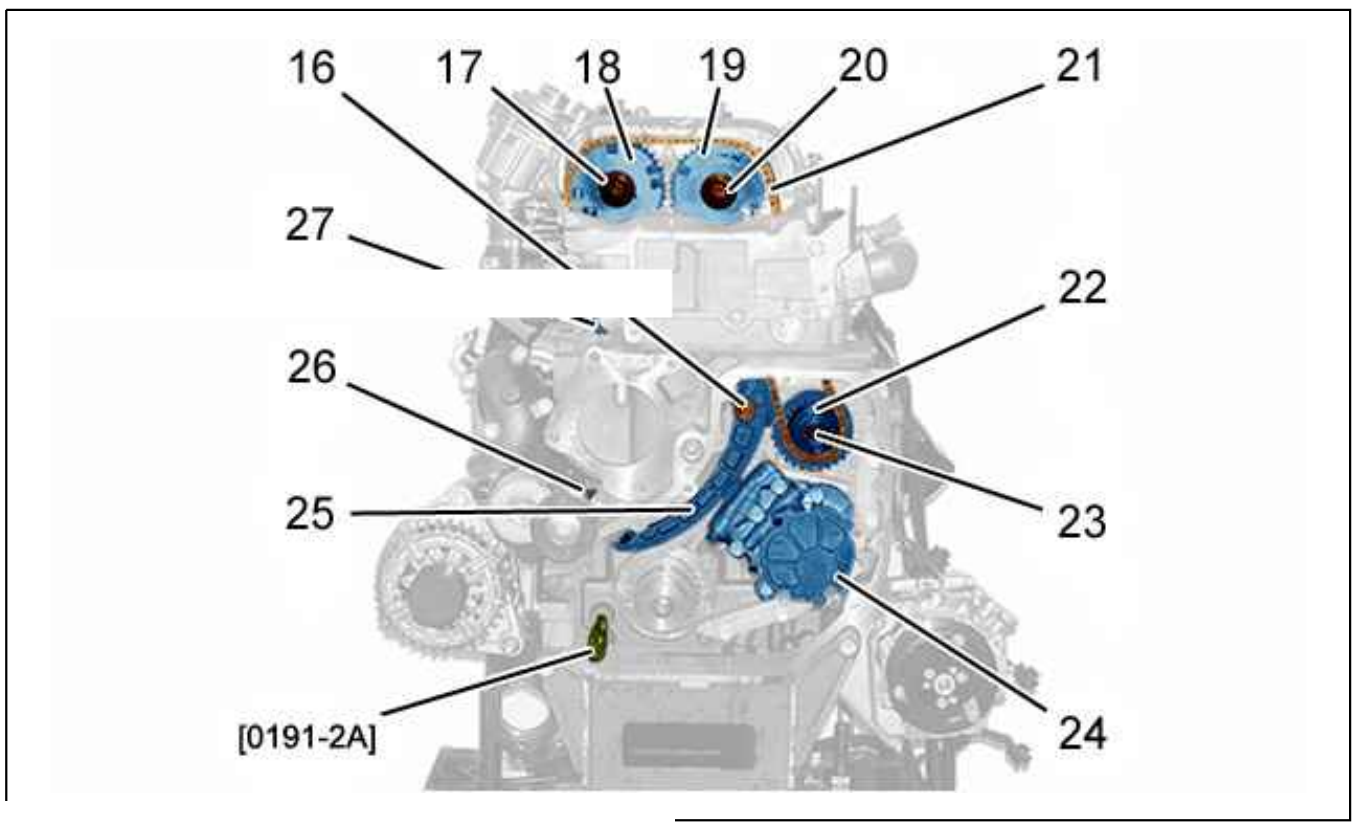

Fit the tool [0191-2A].
Loosen the bolt (23) immobilising the double sprocket (22).

Remove :

- The hydraulic tensioner (27)
- The hydraulic tensioner (26)
- The (16) bolt
- The chain pad (25)
- The (17) bolt
- The camshaft gear (18)
- The (20) bolt
- The camshaft gear (19)
- The timing chain (21)
- The oil pump (24)

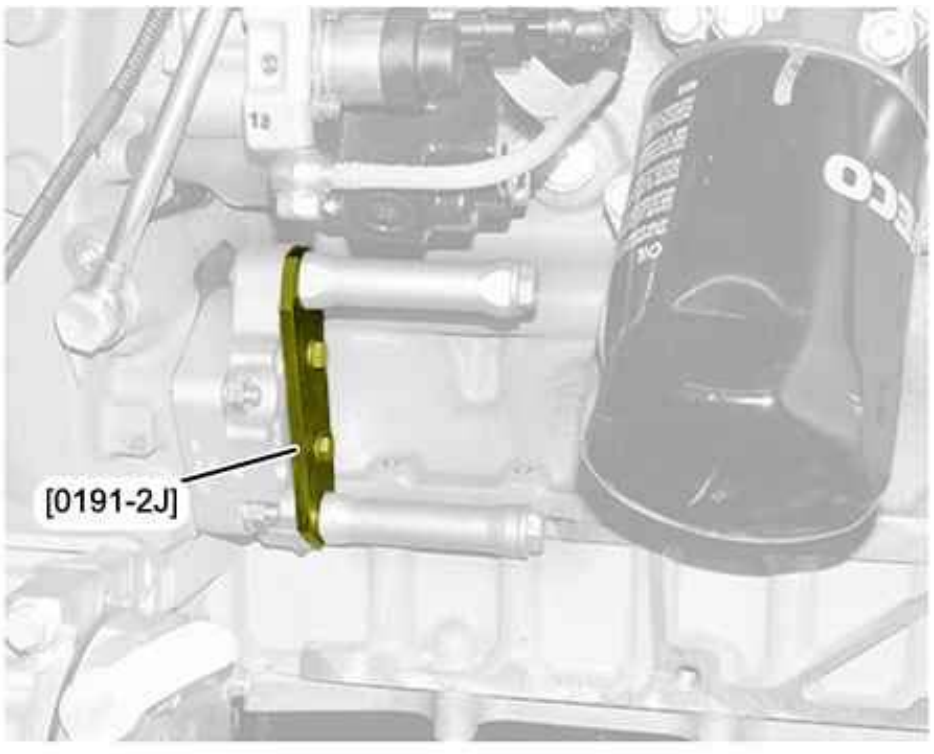

Figure : B1BG2CMD

Immobilise the drive pinion of the power steering pump ; Using tool [0191-2J].

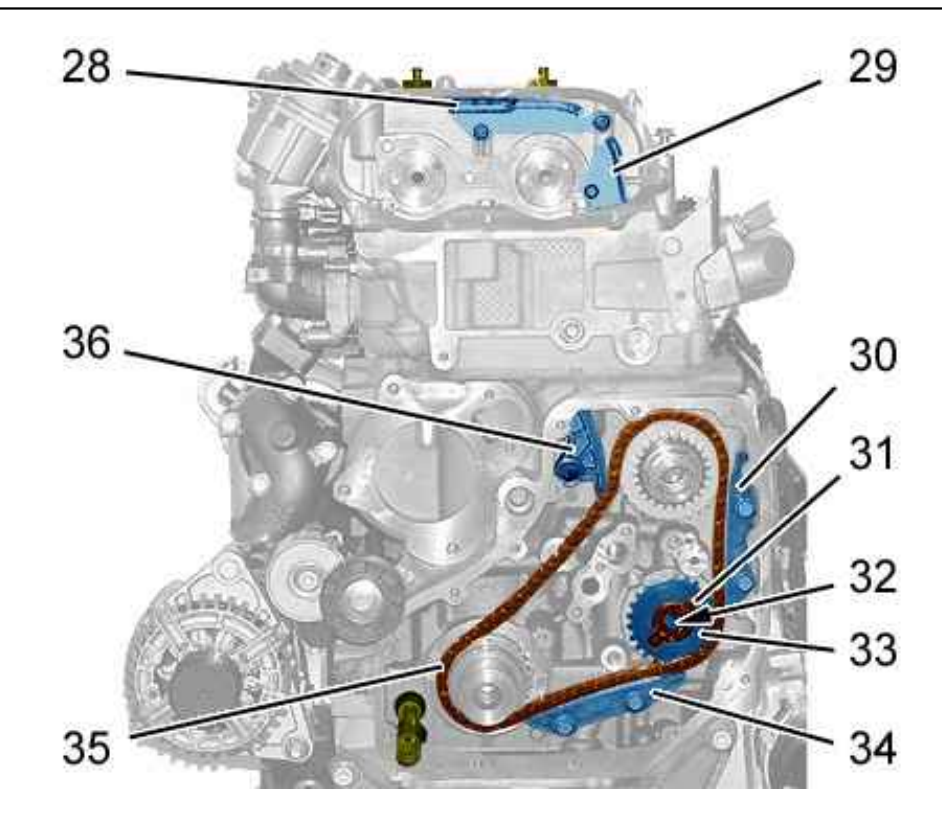

Figure : B1EP208D

Remove :

- The chain pad (30)
- The drive trunnion (31)
- The (32) bolt
- The pinion (33)
- The timing chain (35)
- The chain pad (36)
- The chain pad (28)
- The chain pad (29)
- The tool [0191-2J]

3. Refitting

CAUTION : Check the condition of the chain pads (25), (28), (29), (30), (34), (36) (replace if necessary).

CAUTION : Adhere to the tightening torques .

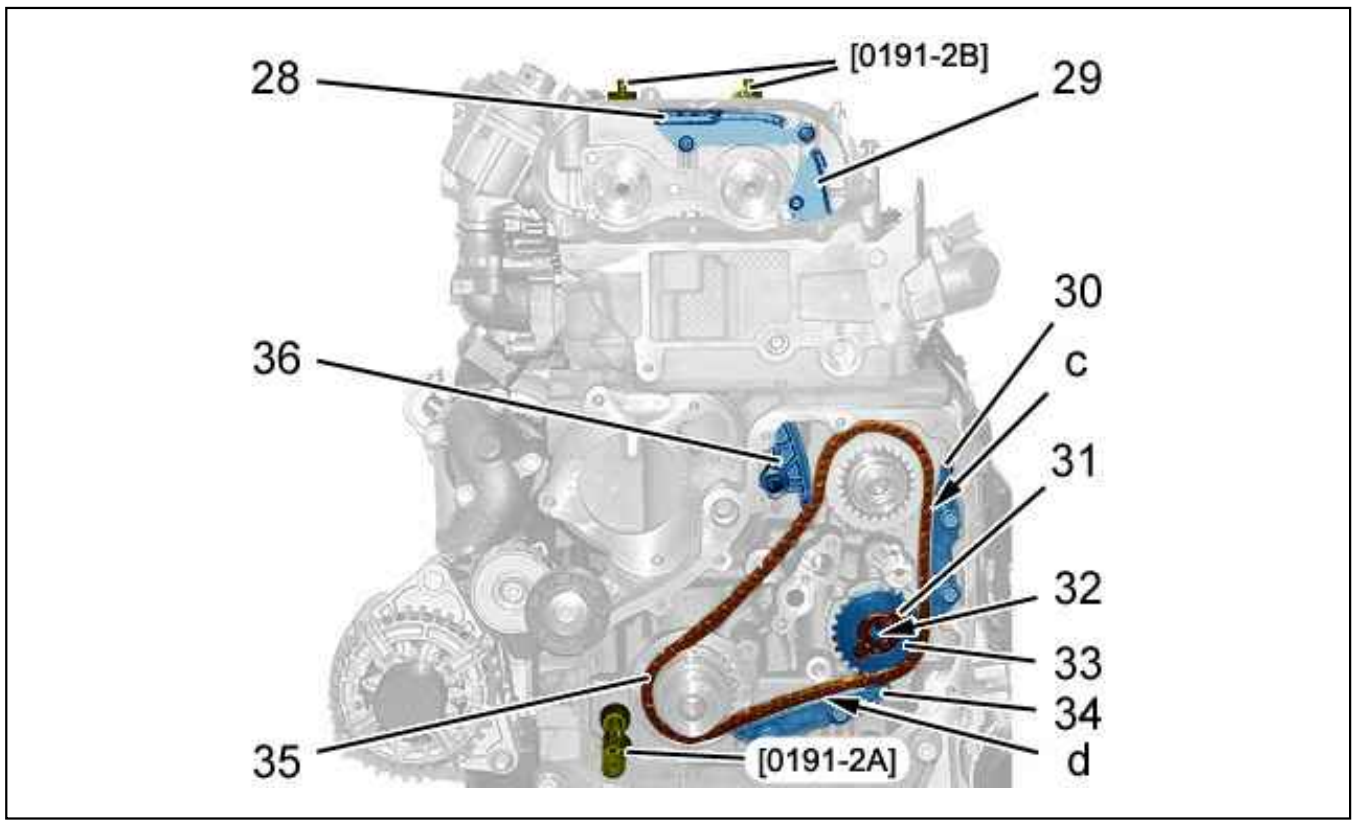

Figure : B1EG0QOD

Peg :

- The camshafts ; Using the tools [0191-2B]
- The crankshaft ; Using tool [0191-2A]

Refit :

- The chain pad (29)
- The chain pad (28)
- The chain pad (36)
- The chain (35)
- The pinion (33)
- The bolt (32) (without tightening)
- The drive trunnion (31)

Tighten : The bolts of the chain pads (30), (34).

CAUTION : Check that the spans "c", "d" of the chain (35) are tight after the gear (33) has been refitted.

Refit :

- The chain pad (30)
- The chain pad (34)

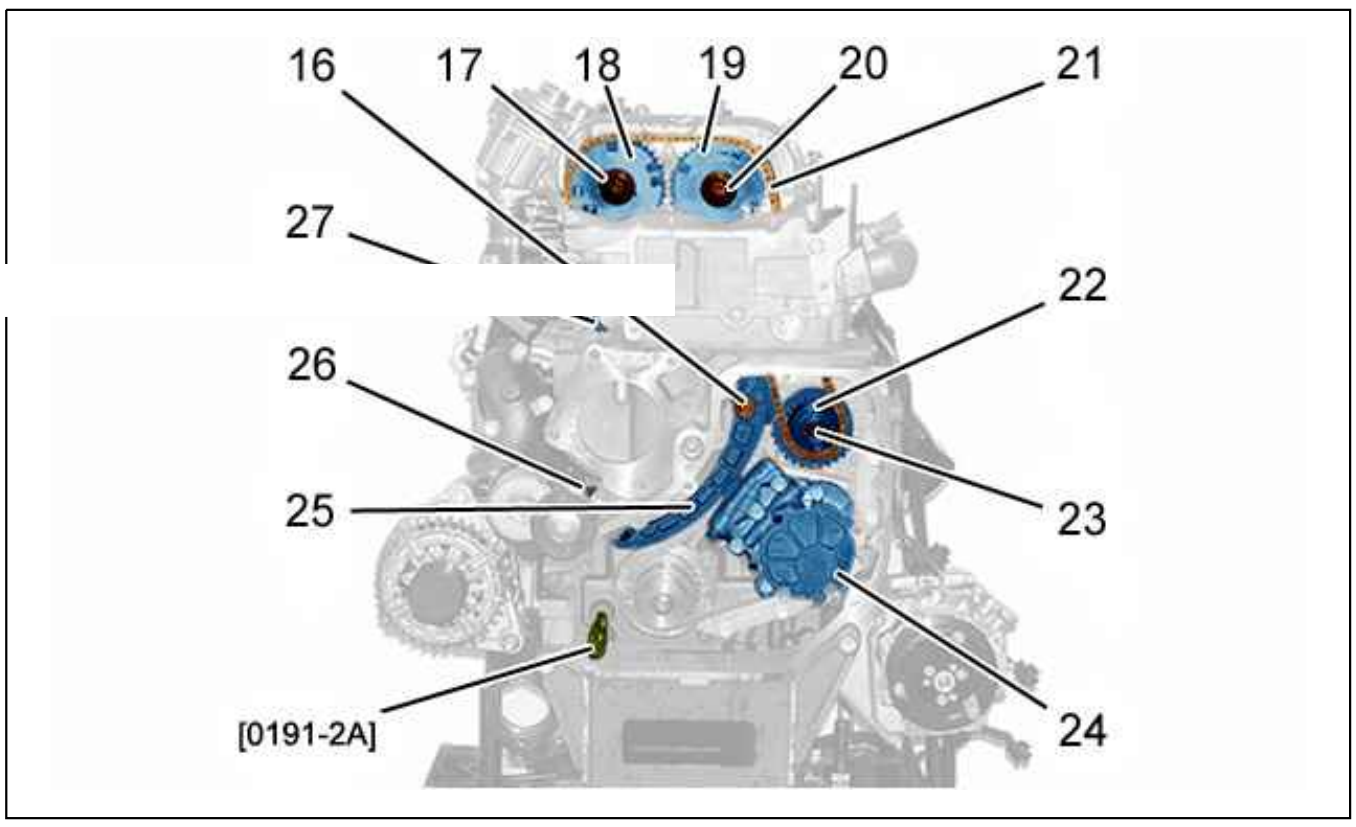

Figure : B1EG0QKD

Position the chain (21) on the camshaft pinions (22) and (19).
Refit :

- The camshaft gear (19)
- The bolt (20) (without tightening)

Position the timing chain (21) on the camshaft sprocket (18).
Refit :

- The camshaft gear (18)
- The bolt (17) (without tightening)

CAUTION : Check that the timing chain (21) is tight between the sprockets (22), (19), (18).

CAUTION : Replace the hydraulic tensioner (27) (Hydraulic tensioner with non-return device).

Fit the tool [0191-2J].
Tighten the bolt (32) .
Remove the tool [0191-2J].
Refit :

- The chain pad (25)
- The bolt (6)
- The hydraulic tensioner (26)
- The oil pump (24)

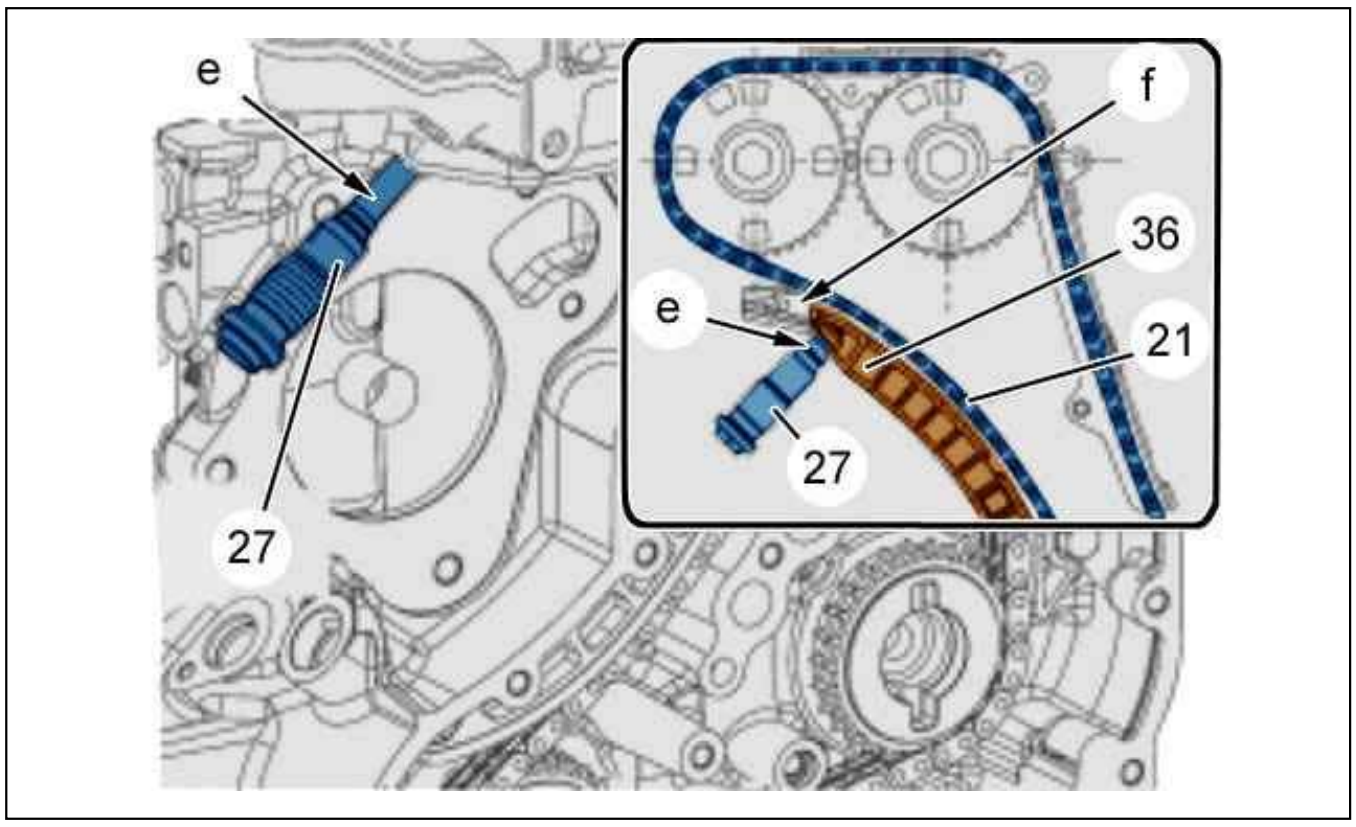

Figure : B1EP20AD

Refit: The hydraulic tensioner (27).

CAUTION : If the piston " e " of the tensioner (27) comes out of its housing during refitting:Replace the hydraulic tensioner 27 (Hydraulic tensioner with non-return device).

CAUTION : Push at "f" on the chain pad (21) to fully compress the piston "e" of the hydraulic tensioner (27);Using a screwdriver through the opening in the camshaft carrier. Release the pressure on the chain pad (21). Check that the piston "e" of the hydraulic tensioner (27) tensions the timing chain (21).

Tighten :

- The (17) bolt
- The (20) bolt
- The (23) bolt

Remove :

- The tools [0191-2B]
- The tool [0191-2A]

Turn the crankshaft 4 turns in the normal direction of rotation.
Refit :

- The tools [0191-2B]

CAUTION : Check that the camshafts and crankshaft are correctly pegged If the adjustment is ineffective, carry out the timing adjustment operation again.

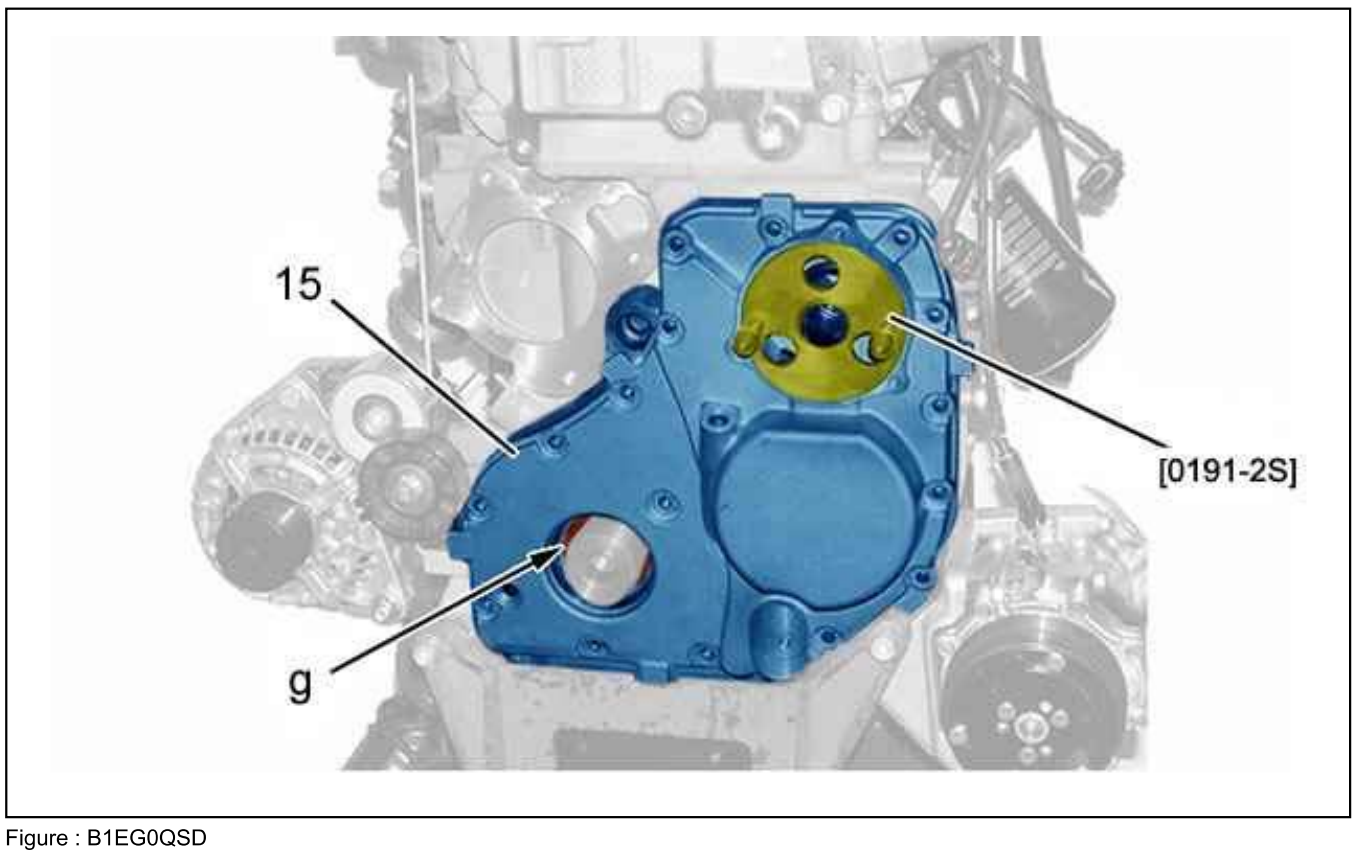

Figure : B1EG0QSD

Refit :

- The timing cover (15)
- The timing cover fixing bolts (15) (without tightening)
- The sealing ring (New) (as " g ") (See the corresponding operation)

Centre the timing cover ; Using tool [0191-2S].
Tighten : The timing cover fixing bolts (15).
Refit :

- Filter (14)
- The circlip (13)
- The tensioning roller (12)
- The cover (11)
- The tube (8)
- The dipstick guide (10)
- The cap (9)
- The cap (7)
- The ancillary drive pulley (5)
- The (6) bolt

Immobilise the accessories drive pulley (6) ; Using tool [0191-2K].
Tighten the bolt (6).
Refit :

- The casing (3)
- The 2 plugs (2)

Reposition the tube (1).
Refit :

- The accessories drive belt(s) (see the relevant operation)
- The power unit assembly (see the relevant operation)

CHECK : OIL PRESSURE

ESSENTIAL : Observe the safety and cleanliness recommendations .

1. Recommended tools

tool	Reference	Designation
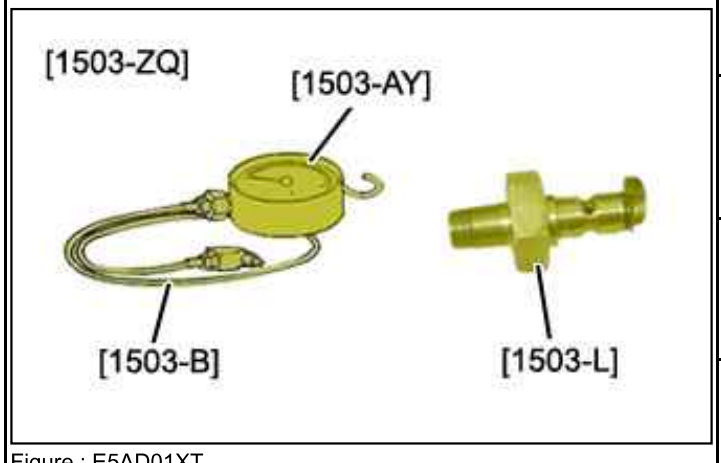 Figure : E5AD01XT	[1503-ZQ]	The upper dipstick guide
	[1503-B]	flexible hose
	[1503-AY]	Pressure gauge for checking oil pressure
	[1503-L]	engine oil pressure union

2. Removing

ESSENTIAL : Respect the safety and cleanliness recommendations that are specific to high pressure diesel injection (HDi) engines.

Place the vehicle on a 2-post lift.
Remove the under engine protection .
Place a draining tray under the engine.

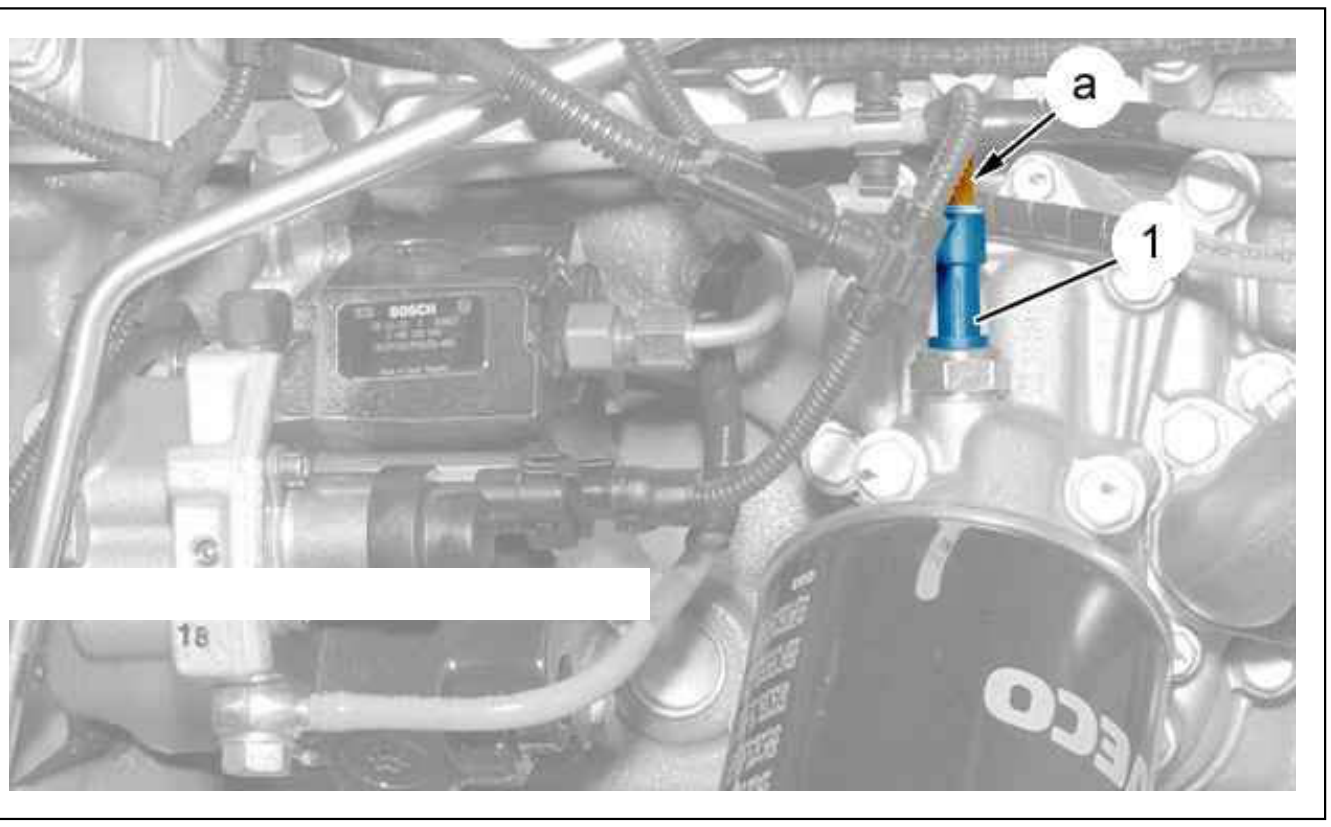

Figure : B1HP2YRD

Disconnect the connector (at "a").
Remove the oil pressure switch (1).

3. Check

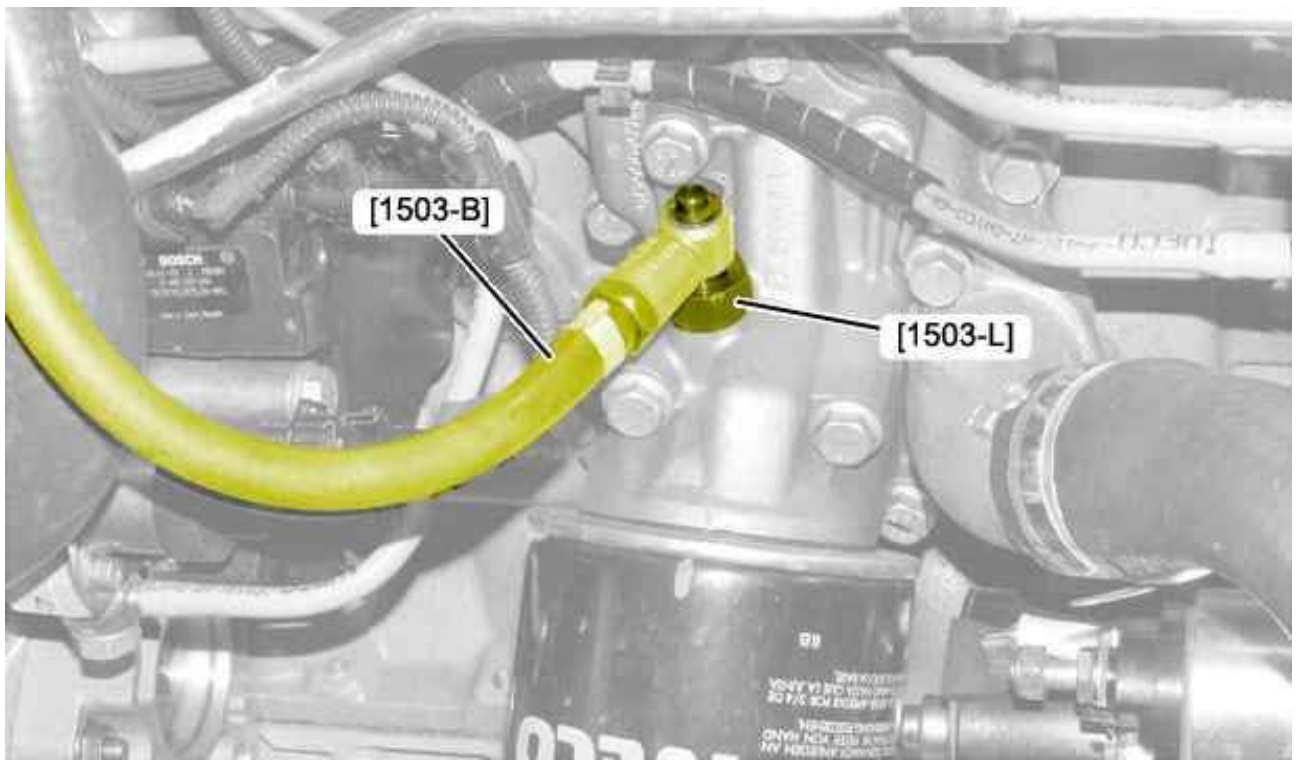

Figure : B1FD073D

Fit the tool [1503-L] in place of the oil pressure switch (1).
Tighten tool [1503-L] to 4 ± 0,4 m.daN.

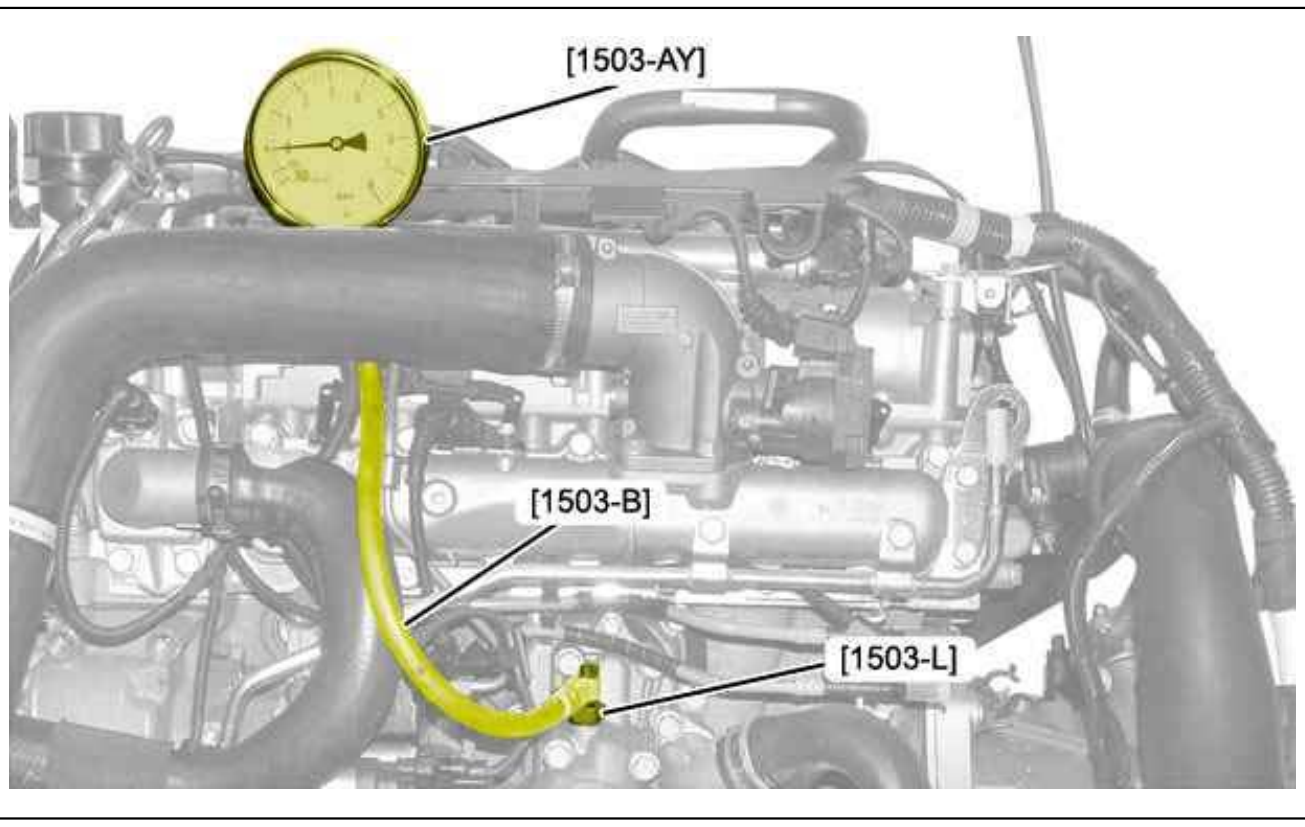

Figure : B1BD04PD

Fit the tool assembly [1503-AY] and [1503-B] to tool [1503-L].

CAUTION : Oil pressure is checked with the engine hot after checking the oil level.

Start the engine.
Wait for the fan to engage and then disengage.
Note the oil pressure.
Compare the readings on the oil pressure gauge with those in the table .
Wait for the engine to cool down.
Remove the tools [1503-AY], [1503-B], [1503-L].

4. Refitting

Clean the thread of the oil pressure switch (1).
Coat the thread of the oil pressure switch (1) with thread lock.
Refit the oil pressure switch (1) ; Tighten to 4 ± 0,4 daN.m.
Reconnect the connector (at "a").
Top up to level.
Start the engine.
Check the sealing of the oil pressure switch .
Refit the under-engine protection .
Return the vehicle to its wheels.

REMOVING - REFITTING : ENGINE OIL TEMPERATURE AND LEVEL SENSOR

ESSENTIAL : Observe the safety and cleanliness recommendations .

1. Location

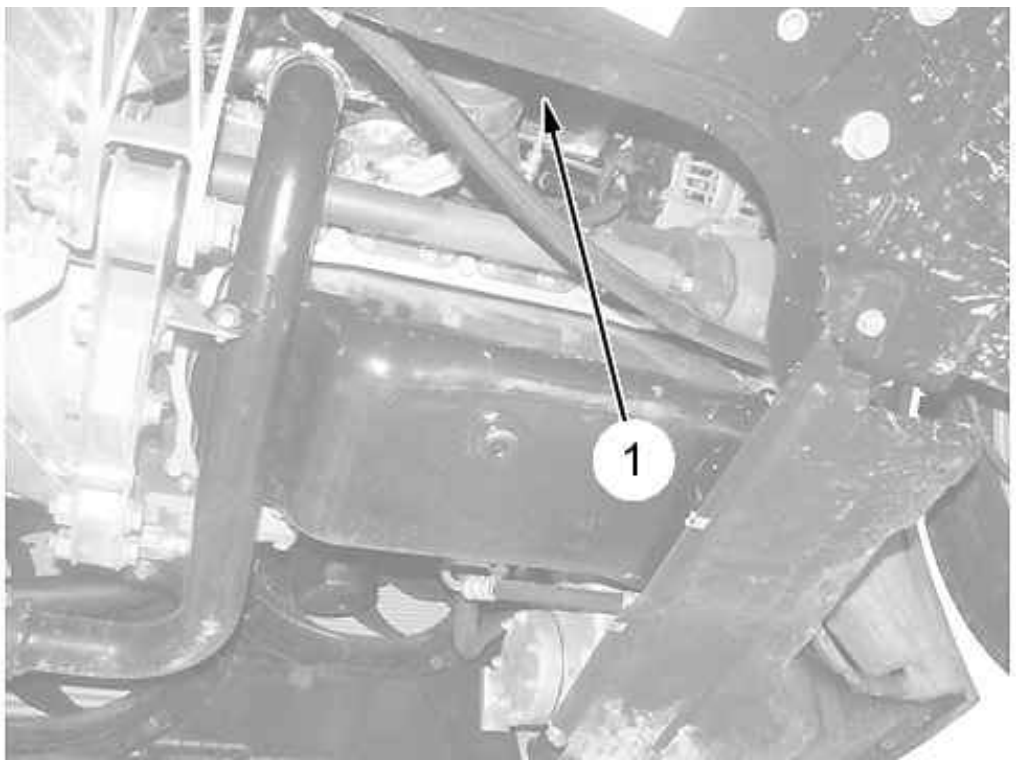

Figure : B1FG00KD

(1) Engine oil temperature and level sensor.

2. Removing

Put the vehicle on a hoist.
Disconnect the battery.
Remove the under engine protection .

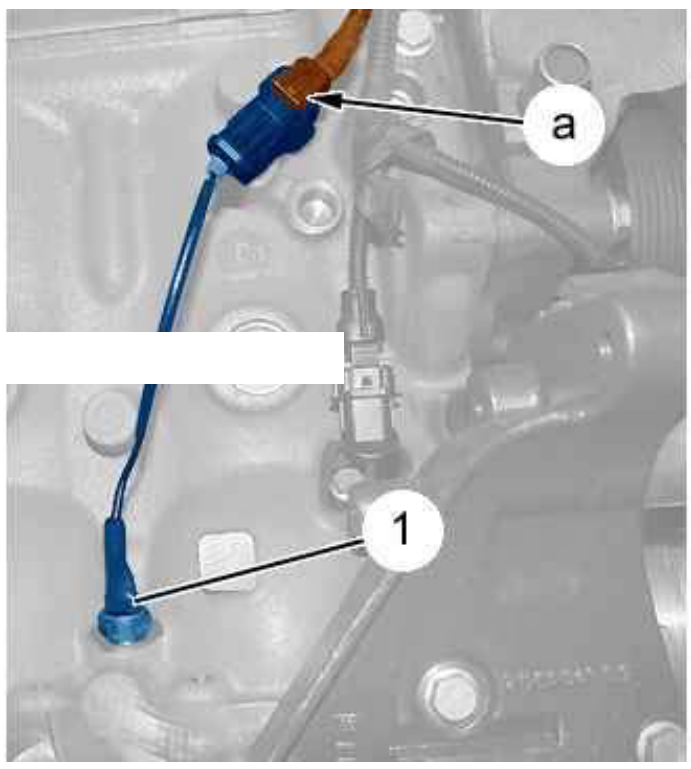

Figure : B1FG00LD

Disconnect the connector (at "a").
Remove : The engine oil level and temperature sensor (1).

3. Refitting

Refit : The engine oil level and temperature sensor (1) (equipped with a new seal) ; Tighten to the specified torque .
Connect the connector (at "a").
Refit the under-engine protection .
Return the vehicle to its wheels.

CAUTION : Perform the operations to be carried out following reconnection of the battery.

Reconnect the battery.

REMOVING - REFITTING : OIL PRESSURE SENSOR

ESSENTIAL : Observe the safety and cleanliness recommendations .

1. Location

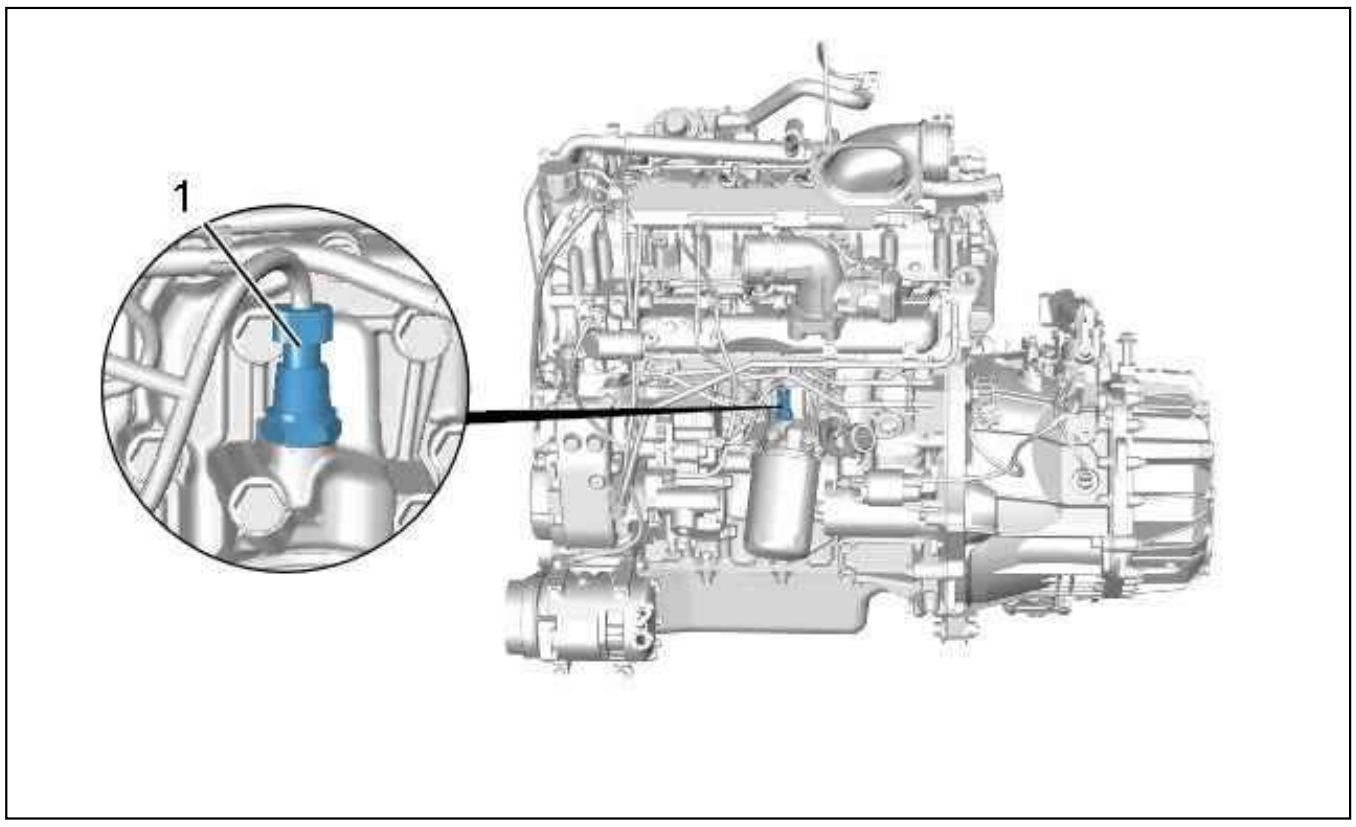

Figure : B1CG00GD

(1)Oil pressure sensor.

2. Removing

Place the vehicle on a 2-post lift.
Disconnect the battery.
Remove the under engine protection .

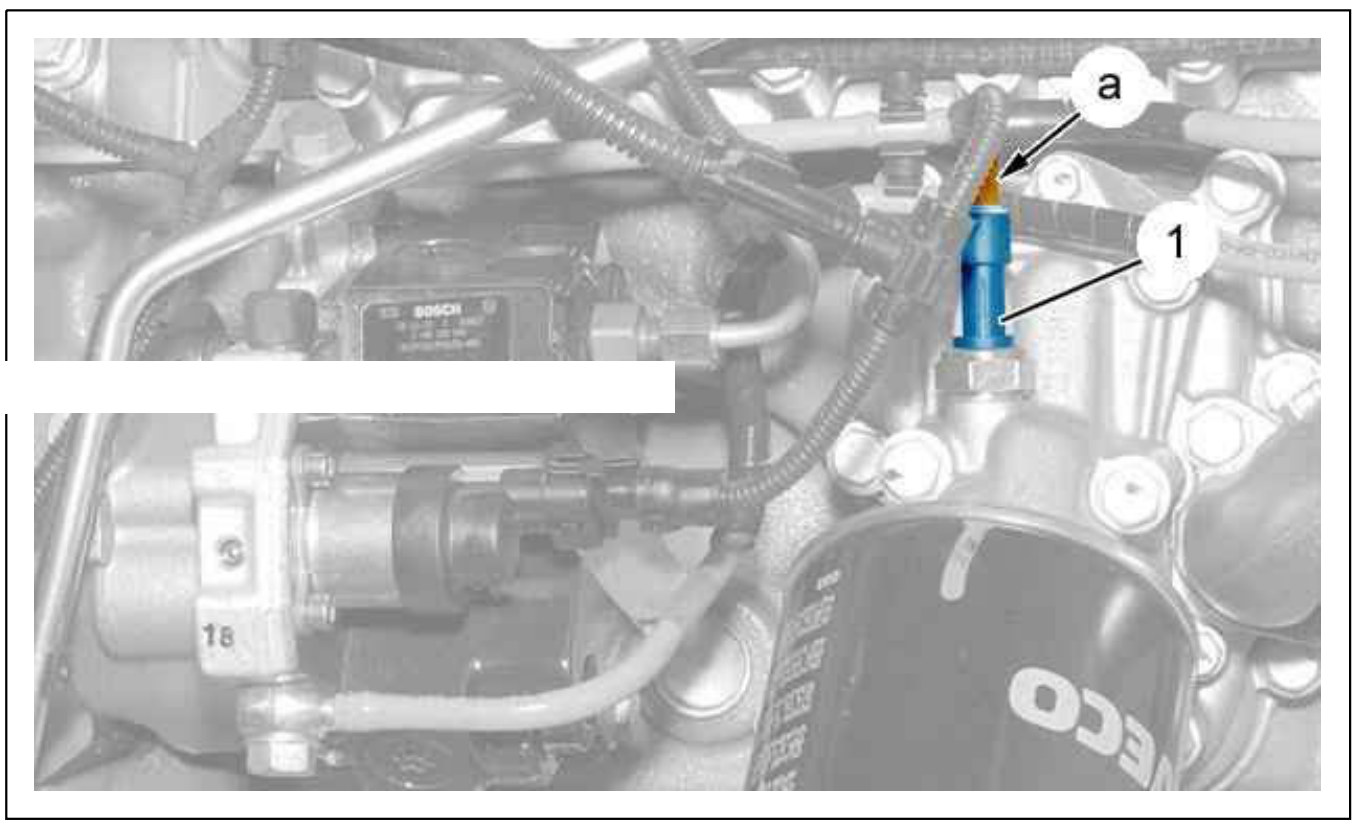

Figure : B1HP2YRD

Disconnect the connector (as "a").
Remove the oil pressure sensor (1).

N.B. : Expect oil to drain out.

3. Refitting

Clean the thread of the oil pressure sensor (1).
Coat the thread of the oil pressure sensor (1) with thread paste.
Refit the oil pressure sensor (1) ; Tighten to the specified torque .
Connect the connector (as "a").
Top up to level (If necessary).
Start the engine.
Check the seal : Oil pressure sensor.
Refit the under-engine protection .
Return the vehicle to its wheels.

CAUTION : Perform the operations to be carried out following reconnection of the battery.

Reconnect the battery.

REMOVING - REFITTING : OIL LEVEL/TEMPERATURE SENSOR

ESSENTIAL : Observe the safety and cleanliness recommendations .

1. Location

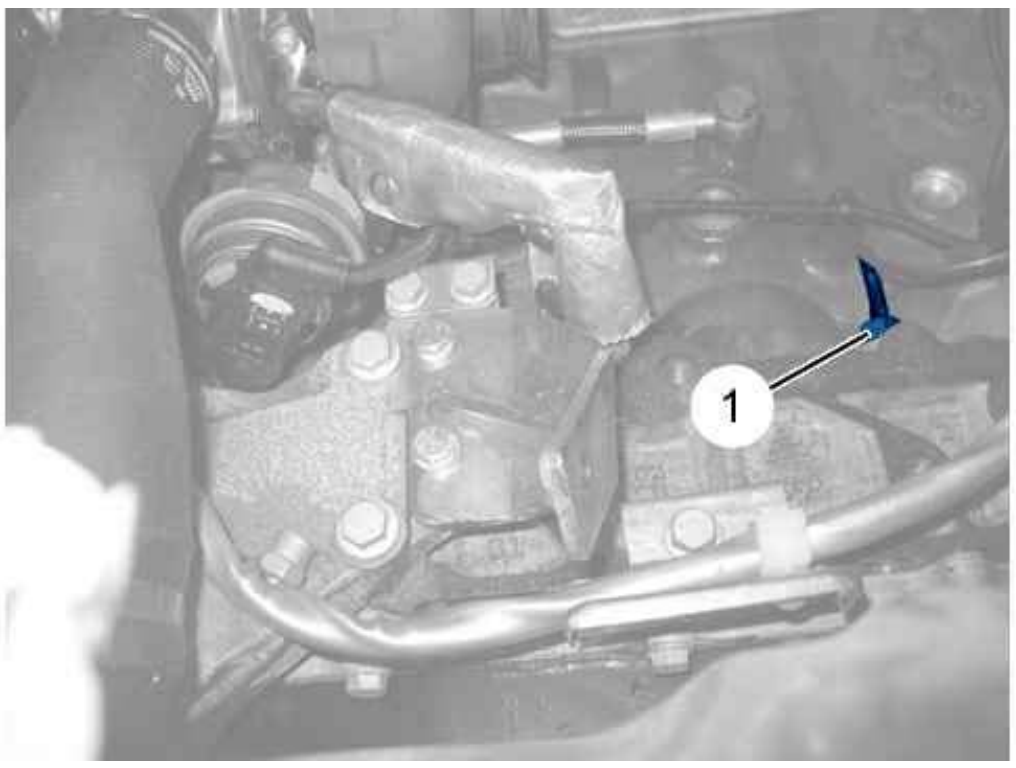

Figure : B1FG06DD

The engine oil level and temperature sensor (1) is located on the rear face of the engine.

2. Removing

Place the vehicle on a ramp.
Disconnect the battery.

CAUTION : Before starting any operation close to the exhaust line, wait the latter to cool down.

Remove the under engine protection .

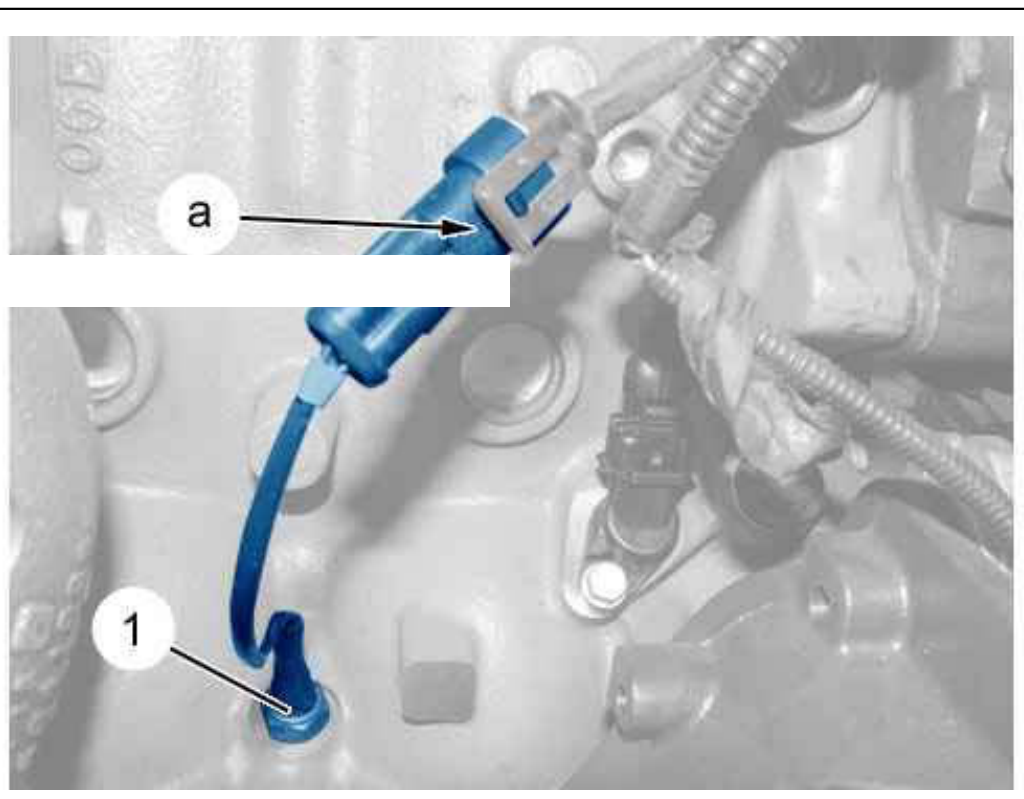

Figure : B1FG06GD

Unplug : The engine oil level and temperature sensor (1) connector (at "a").
Remove : The engine oil level and temperature sensor (1).

3. Refitting

CAUTION : Engine tightening torques .

Refit : The engine oil level and temperature sensor (1).
Connect : The engine oil level and temperature sensor (1) connector (at "a").
Refit the under-engine protection .

CAUTION : Perform the operations to be carried out following reconnection of the battery.

Reconnect the battery.

REMOVING - REFITTING : COOLANT OUTLET HOUSING TEMPERATURE SENSOR

ESSENTIAL : Observe the safety and cleanliness recommendations .

1. Removing

Open the bonnet.
Disconnect the ancillaries battery.
Drain the cooling system (See the corresponding operation).

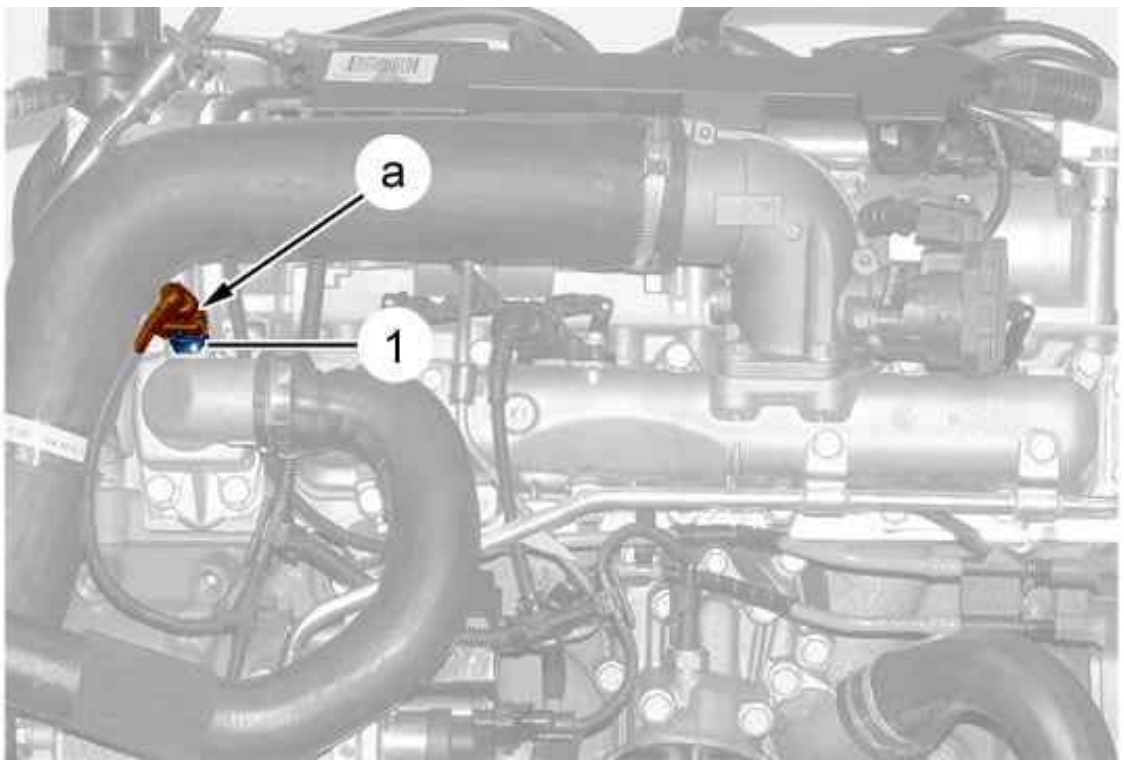

Figure : B1BPSG6D

Disconnect the connector (at "a").
Remove the coolant temperature sensor (1).

2. Refitting

Refit the coolant temperature sensor (1) (equipped with a new seal).
Tighten the coolant temperature sensor (1) to 2,5 m.daN.
Reconnect the connector (at "a").
Fill and bleed the cooling system (See the corresponding operation).
Reconnect the ancillaries battery.
Close the bonnet.

REMOVING - REFITTING : COOLANT LEVEL SENSOR

ESSENTIAL : Observe the safety and cleanliness recommendations .

1. Location

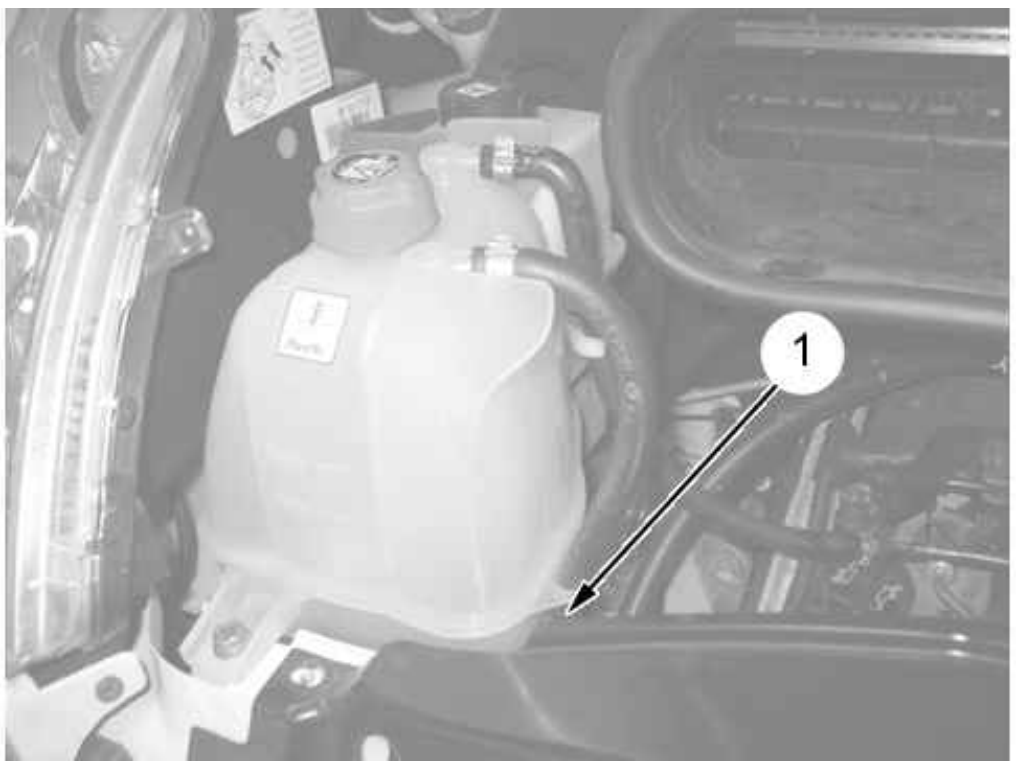

Figure : B1GG03LD

Coolant level sensor (1).

2. Removing

Disconnect the battery.

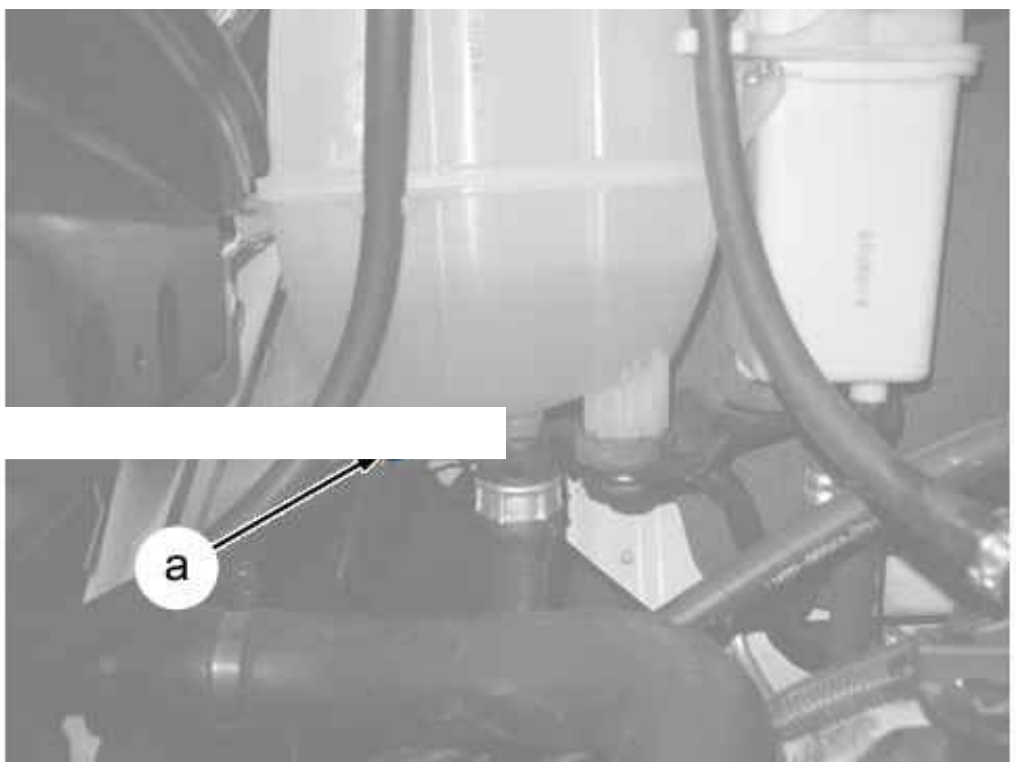

Figure : B1GG03MD

Disconnect the connector (at "a").
Remove the coolant level sensor (1).

3. Refitting

Refitting : Coolant level sensor (1).
Connect the connector (at "a").
Reconnect the battery.

CAUTION : Perform the operations to be carried out following reconnection of the battery.

DRAIN AND REFILL - REFILLING - BLEEDING : COOLING SYSTEM

ESSENTIAL : Observe the safety and cleanliness recommendations .

CAUTION : Refer to the vehicle's servicing schedule for the coolant checking interval.

Check the pH of the coolant ; Using reactive strips.

N.B. : The pH value of the coolant should be between 7 and 8.

Replace the coolant if the pH value is out of tolerance.

1. Tooling

Tool	Reference	Designation
 Figure : E5AB1CNT	[01102]	Tool for filling the cooling system by vacuum
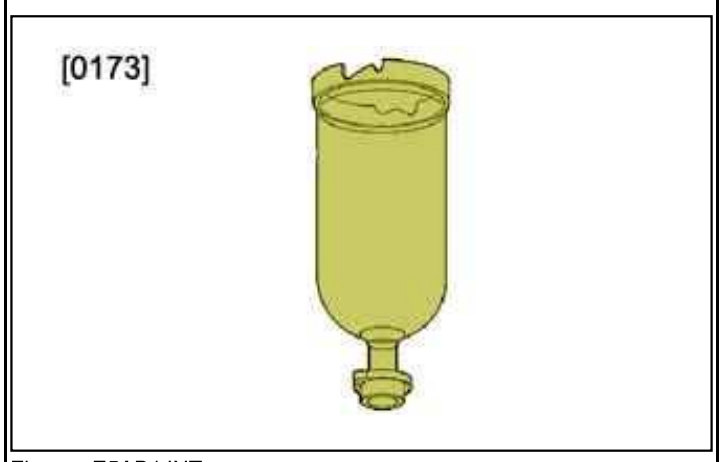 Figure : E5AB1JNT	[0173]	Bayonet filling cylinder
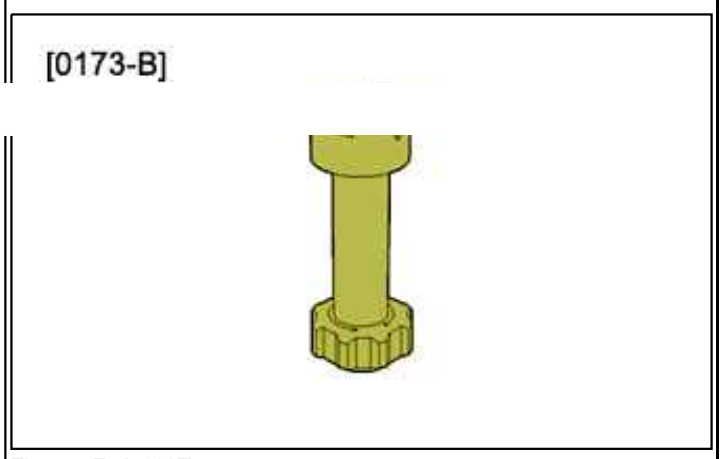 Figure : E5AI009T	[0173-B]	Adaptor / extension for bayonet filling cylinder [0173]
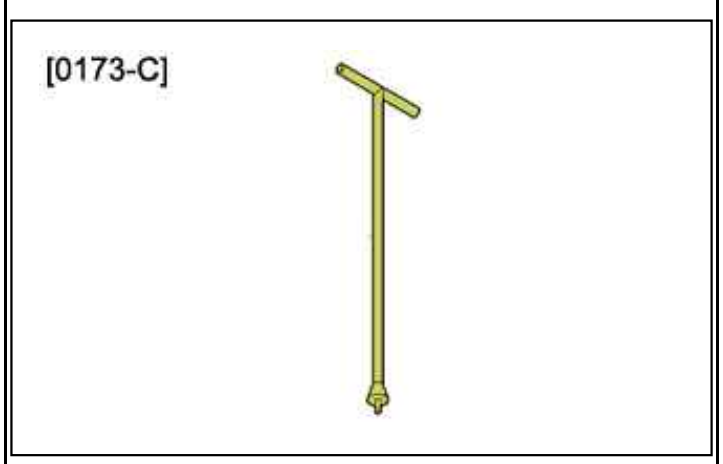 Figure : E5AI006T	[0173-C]	blocking rod for filling cylinder
	[0173-2]	Screw-fit filling cylinder (without extension)

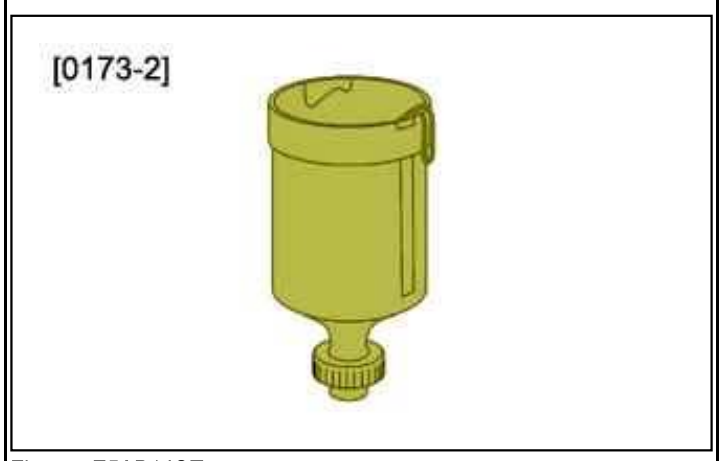 Figure : E5AB1JOT		
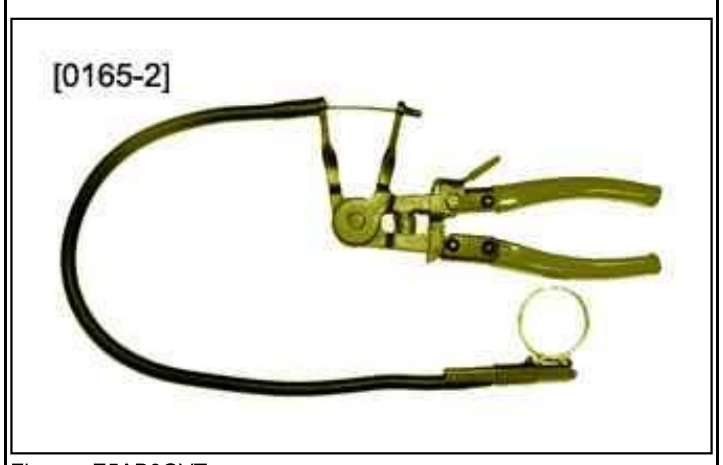 Figure : E5AB0GVT	[0165-2]	Cable pliers for flexible clips

2. Draining the cooling system

CAUTION : The draining operation is carried out with the engine cold.

Put the vehicle on a hoist.
Remove :

- The protective panel under the engine (according to equipment)
- The de-aeration chamber plug (Carefully)

N.B. : Place a clean tray underneath the engine to recover the coolant.

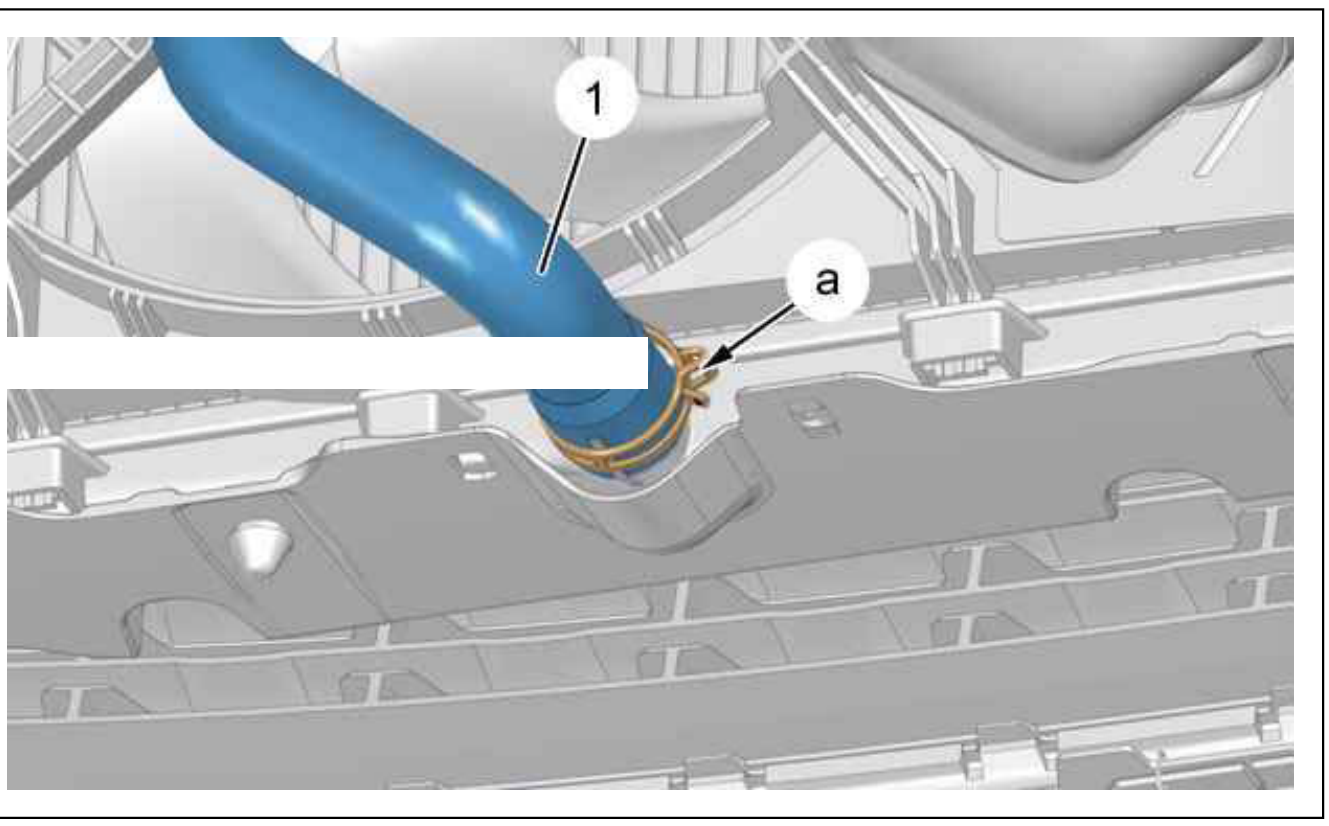

Figure : B1GI00MD

Uncouple the pipe (1) (at "a") ; Using tool [0165-2].
Open the bleed screws located on the coolant outlet housing and the heater pipe.
Allow the coolant to run out.
Drain the cylinder block (if necessary).

CAUTION : If the tool for filling the cooling system by vacuum [01102] is used, measure the quantity of coolant drained.

3. Filling the cooling system

CAUTION : If the cooling system is contaminated, rinse with clean water.

CAUTION : Always use new coolant.

CAUTION : Each filling operation must always be followed by a cooling system degas operation.

3.1. Filling the cooling system by gravity

Connect the hose (1) (at "a") ; Using tool [0165-2].

N.B. : Refit new clips .

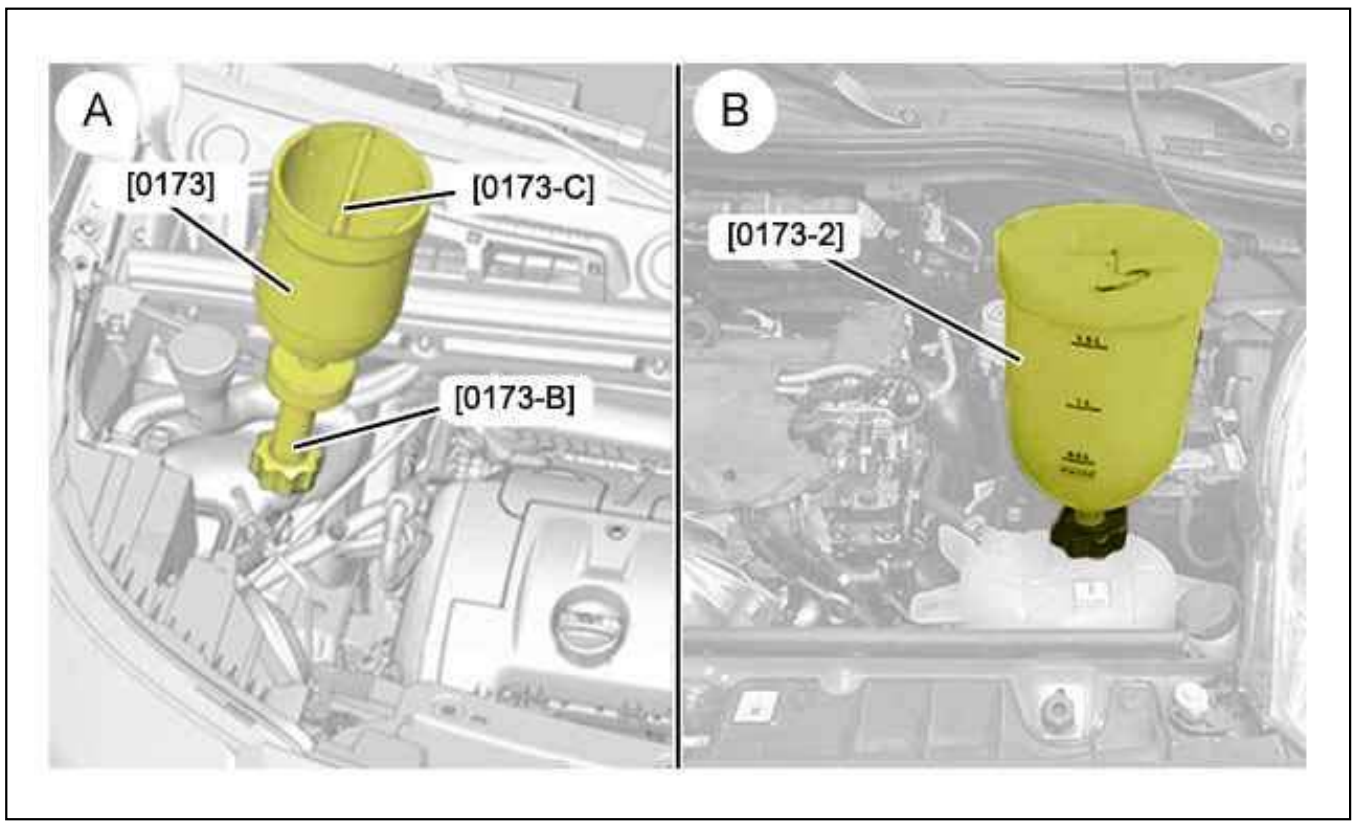

Figure : B1GI09DD

"A" : Fitting with filling cylinder offset ; Using the tools [0173], [0173-B], [0173-C].
"B" : Fitting with filling cylinder direct ; Using tool [0173-2].
Fit the filling cylinder , blank and adaptor assembly on the expansion chamber (according to assembly).
Open the rod on the filling cylinder .
Slowly fill the cooling system with clean coolant.
Close the bleed screw when the fluid is flowing freely without any air bubbles.

N.B. : The filling cylinder should be filled to the 1 litre mark for correct bleeding of the heater matrix.

3.2. Filling using the tool for filling the cooling system by vacuum

CAUTION : Always use new coolant.

Connect the hose (1) (at "a") ; Using tool [0165-2].

N.B. : Refit new clips .

Close the bleed screw .
Put the equipment for filling by vacuum [01102] in place on the expansion bottle .

CAUTION : To avoid entry of air into the circuit, provide for 20 % additional coolant.

Prepare a receptacle of coolant containing the quantity of fluid drained + 20 %.

N.B. : The receptacle must be positioned slightly lower than the equipment for filling by vacuum.

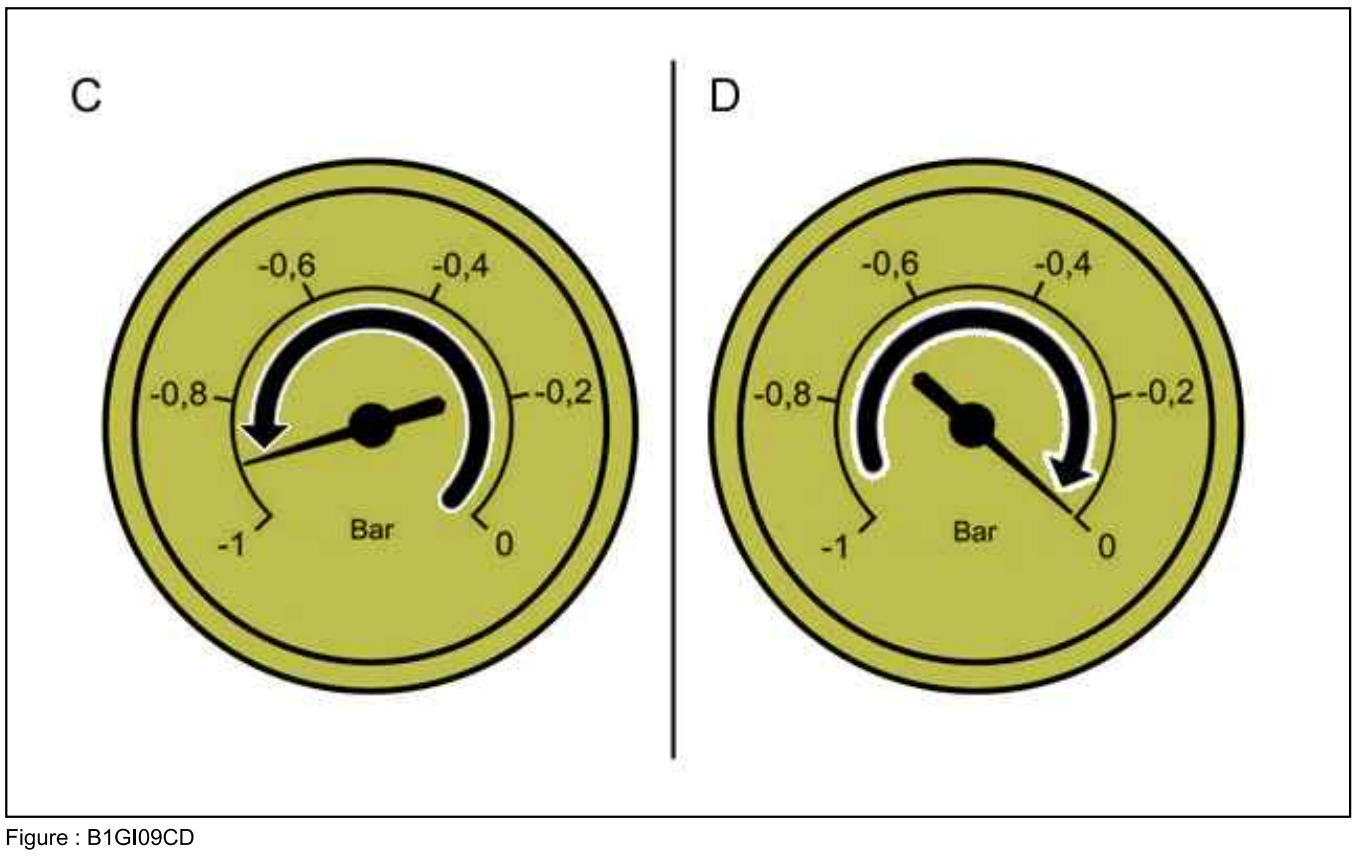

Figure : B1GI09CD

Place the cooling circuit under a vacuum to reach -0,9 bar (diagram "C") :

- Wait 10 seconds and check that the value obtained does not drop
- Fill the cooling circuit completely and wait for the return to 0 bar (diagram "D")

N.B. : The quantity of coolant filled should correspond to the quantity of fluid drained.

Repeat the operation until the cooling system is full (if necessary).

CAUTION : Remove the equipment for filling by vacuum [01102] and rinse the assembly with clean water.

4. Degassing and checking the cooling system

Fit the charging cylinder , closer and adaptor assembly on the expansion bottle, in the case of draining using the tool for filling by vacuum [01102].
Open the rod on the filling cylinder .
Start the engine.

N.B. : The air conditioning control should not operate during this phase.

4.1. Toutes motorisations sauf norme de dépollution EURO 6

Keep the engine speed at 1500 - 2000 rpm, up to the second cooling cycle (cooling fan(s) cutting in and out).

CAUTION : Check that there are no coolant leaks.

4.2. Diesel engine Euro 6

The cutting in of the fan assembly for 10 seconds indicates the switch to after sales degas mode.
Accelerate to an engine speed above 2300 rpm for more than 10 seconds to switch to degas mode.
Maintain the engine speed at 2500 rpm until the fan assembly cuts in again.

4.3. Degassing and checking the cooling system (continued)

CAUTION : Check that the level of coolant in the filling cylinder is sufficient.

Stop the engine.

ESSENTIAL : Do not remove the filling cylinder while the engine is hot.

Leave the engine to cool.
Blank the filling cylinder using the blocking rod .
Remove the filling cylinder , plug and adapter assembly.
Check the coolant level when cold.
Top up the coolant to the "max" level (Cold).

CAUTION : Do not fill the system past the max mark.

Refit and tighten the cap on the header tank .

CAUTION : Check that the cooling system filler cap is locked (For bayonet cap).

Refit :

- The protective panel under the engine (according to equipment)
- The vehicle to its wheels

TIGHTENING TORQUES : COMPONENTS OF THE FUEL CIRCUIT

1. Fuel tank unit

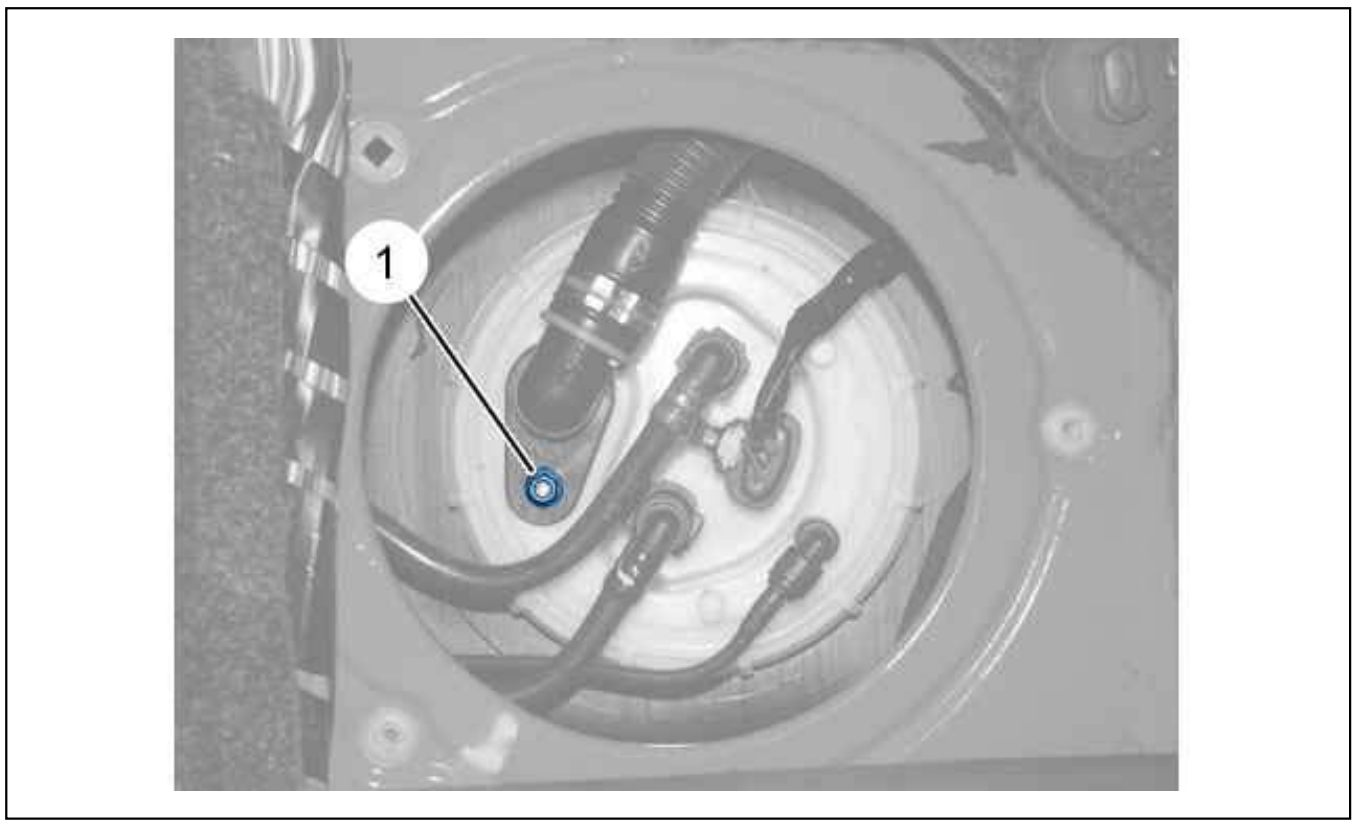

Figure : B1HB0TBD

Reference	Description	Tightening torque
(1)	Breather tube fixing nut	0,4 da.Nm

2. Fuel tank

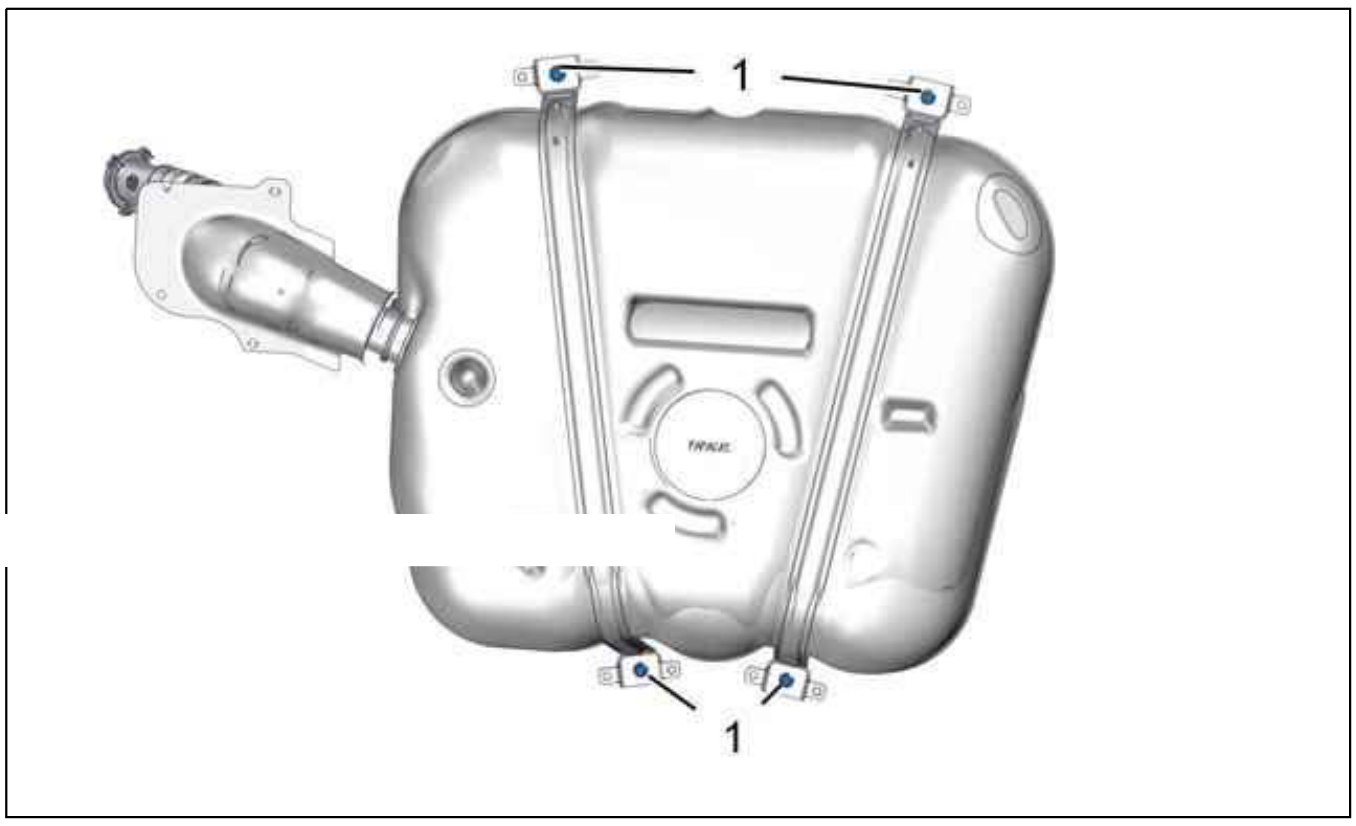

Figure : B1HB0TED

Reference	Description	Tightening torque
(1)	Fuel tank fixing nuts	3,5 da.Nm

CHECK : LOW PRESSURE FUEL SUPPLY CIRCUIT

ESSENTIAL : Observe the safety and cleanliness recommendations .

1. Tooling

tool	Reference	Designation
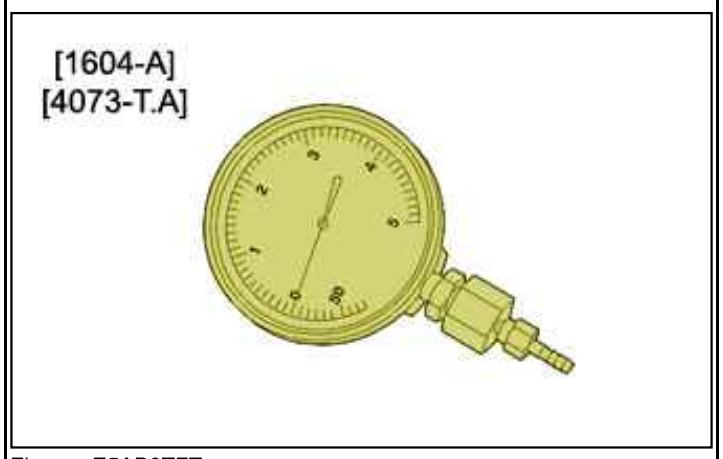 Figure : E5AB0TFT	[1604-A] [4073-T.A]	pressure gauge for checking the turbocharging pressure
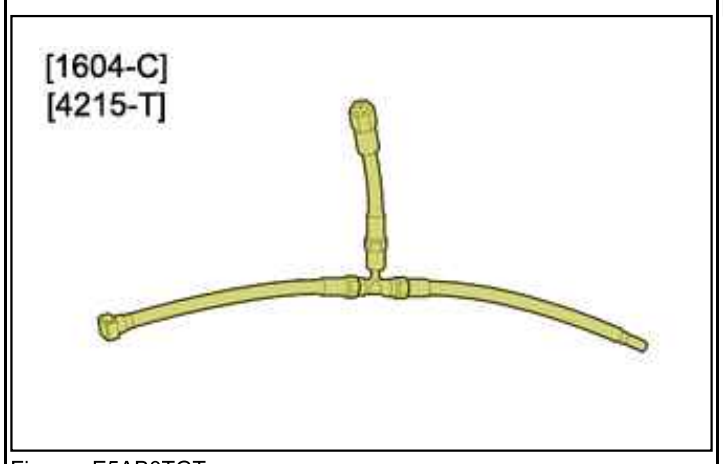 Figure : E5AB0TGT	[1604-C] [4215-T]	10 mm diameter union for low pressure take-off

2. Check

ESSENTIAL : Respect the safety and cleanliness recommendations that are specific to high pressure diesel injection (HDi) engines .

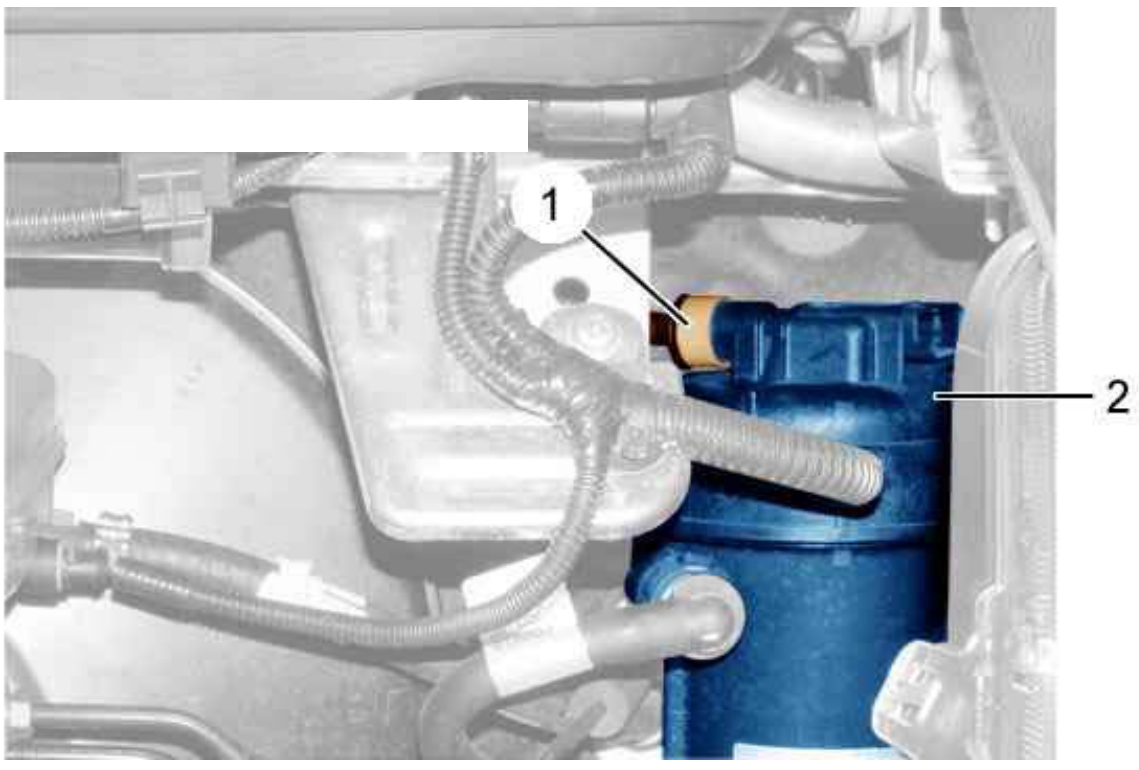

Figure : B1HP2F7D

Uncouple the fuel pipe (1) from the fuel filter (2).
Unclip the fuel filter (2) from its support.

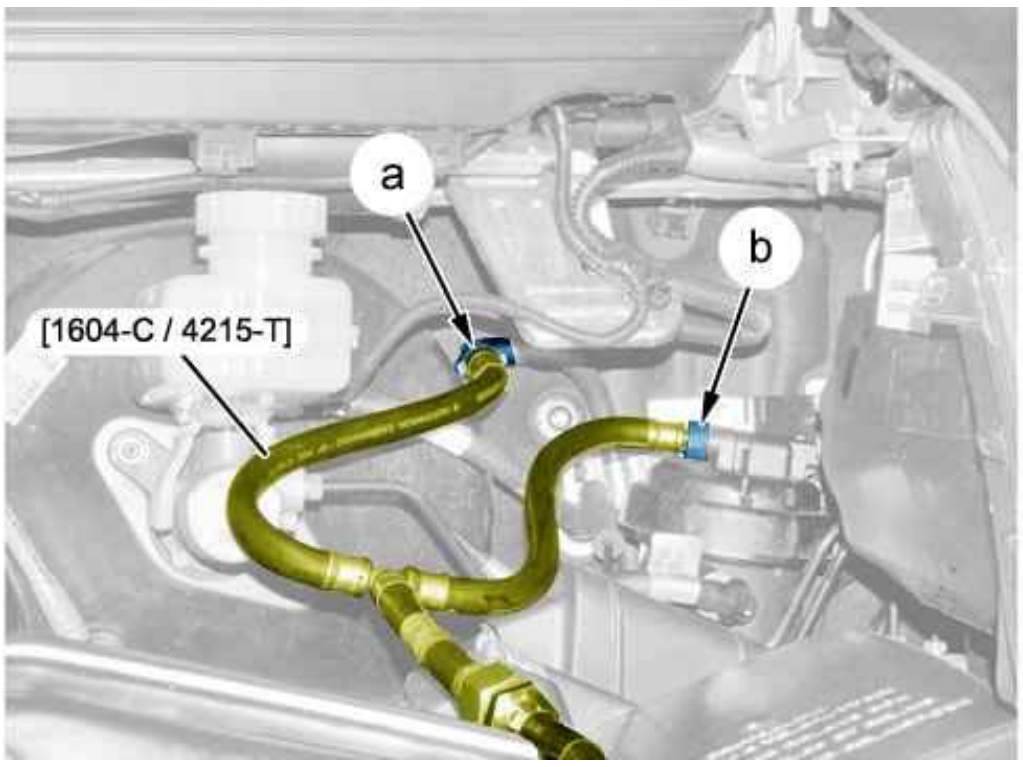

Figure : B1HDZKOD

Connect the tool [1604-C / 4215-T] between the priming pump and the fuel filter at "b" on the fuel filter inlet and at "a" on the fuel pipe.

N.B. : This connection makes it possible to ascertain the pressure of the scavenge pump.

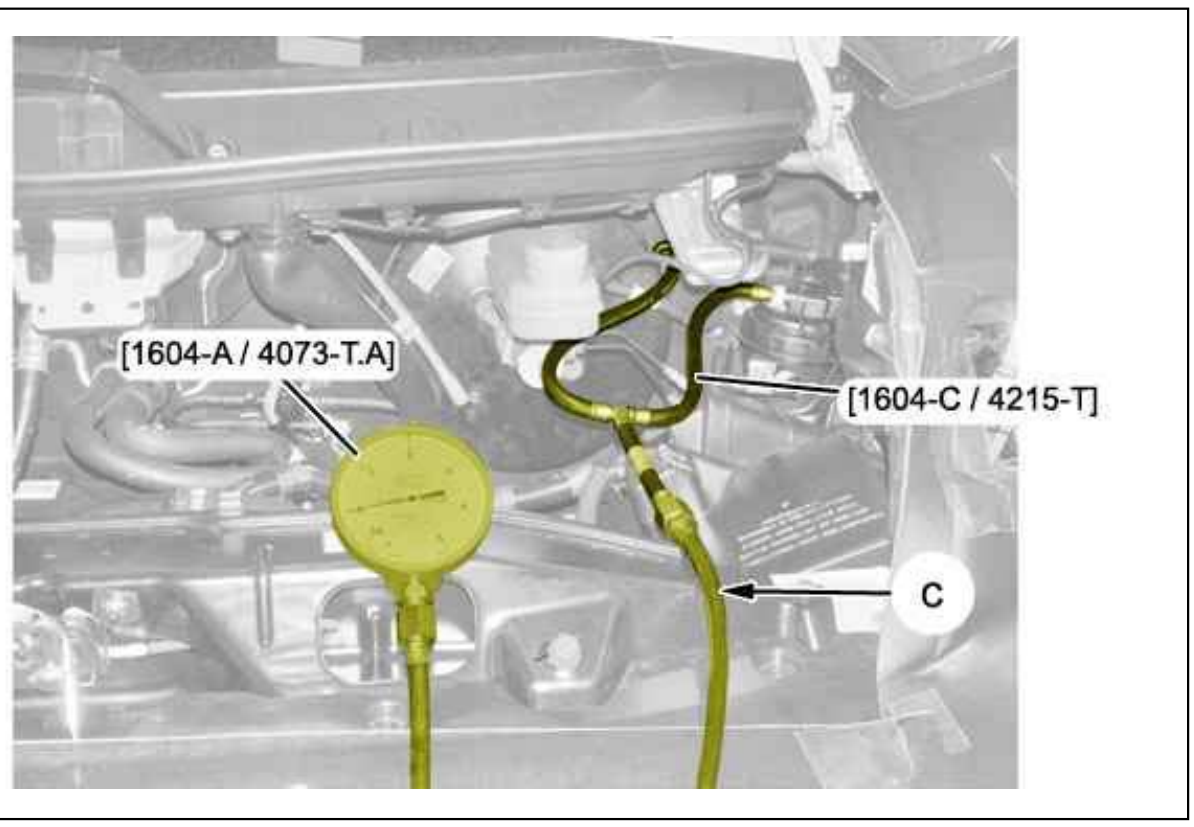

Figure : B1HDZGHD

Connect the pressure gauge [1604-A / 4073-T.A] to the tool [1604-C / 4215-T] using a pipe (at "c").
Position the pressure gauge [1604-A / 4073-T.A] in the vehicle.
Start the engine.
Engine running at idle speed.
Compare the pressure values taken on the pressure gauge with the ones in the table .

REMOVING - REFITTING : HIGH PRESSURE FUEL REGULATOR (HIGH PRESSURE PUMP)

ESSENTIAL : Observe the safety and cleanliness recommendations .

1. Tooling

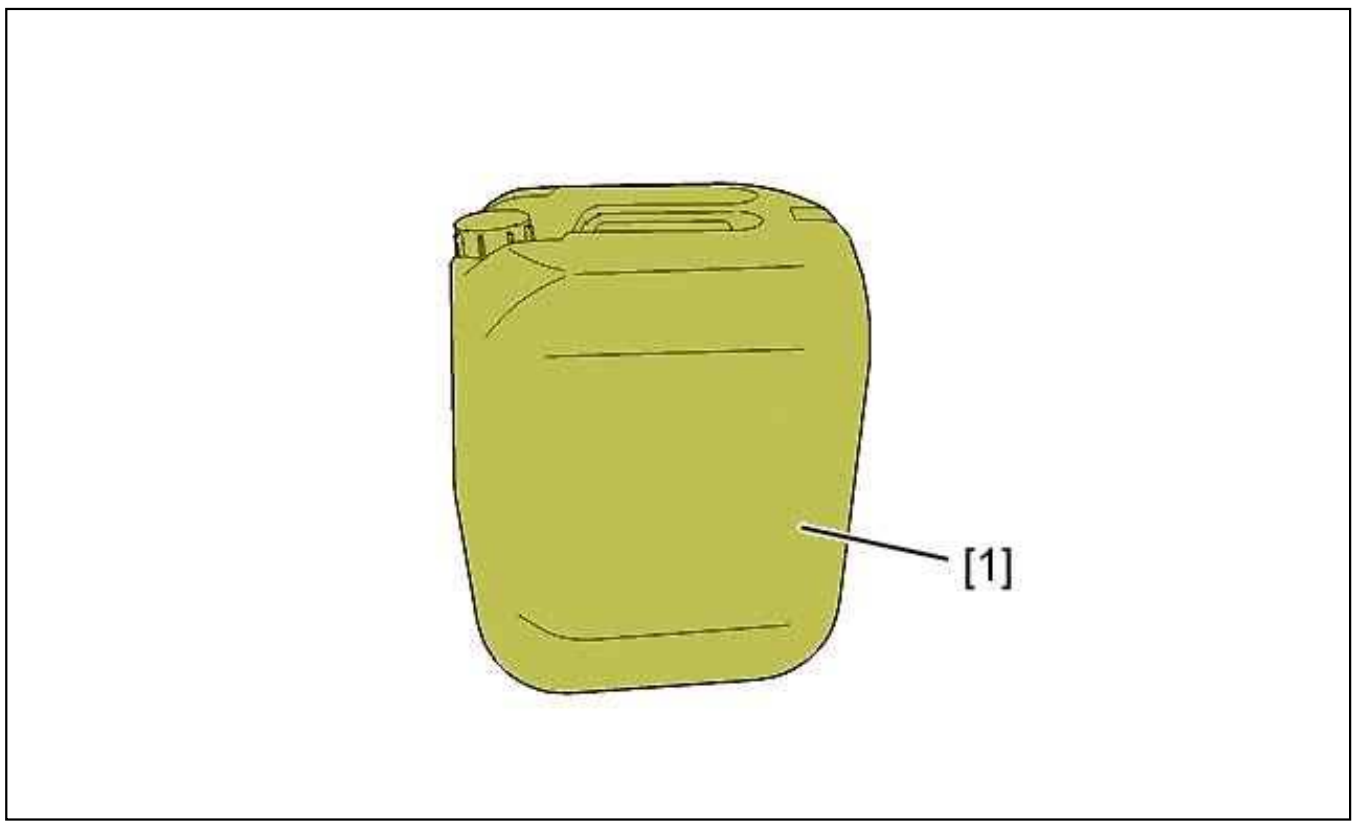

Figure : E5AP32FD

[1] Degreasing product SODIMAC.

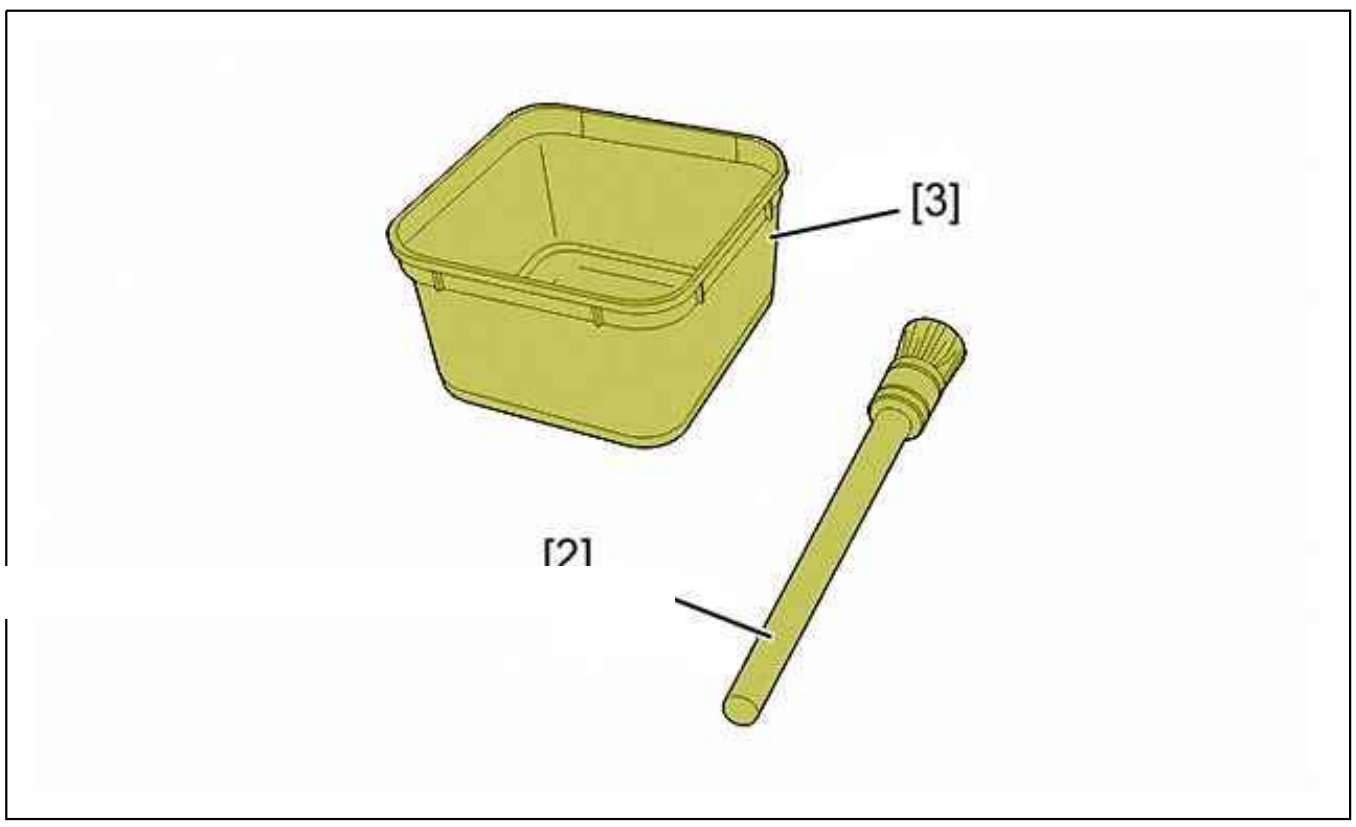

Figure : E5A200LD

[2] Brush.
[3] Cleaning tray.

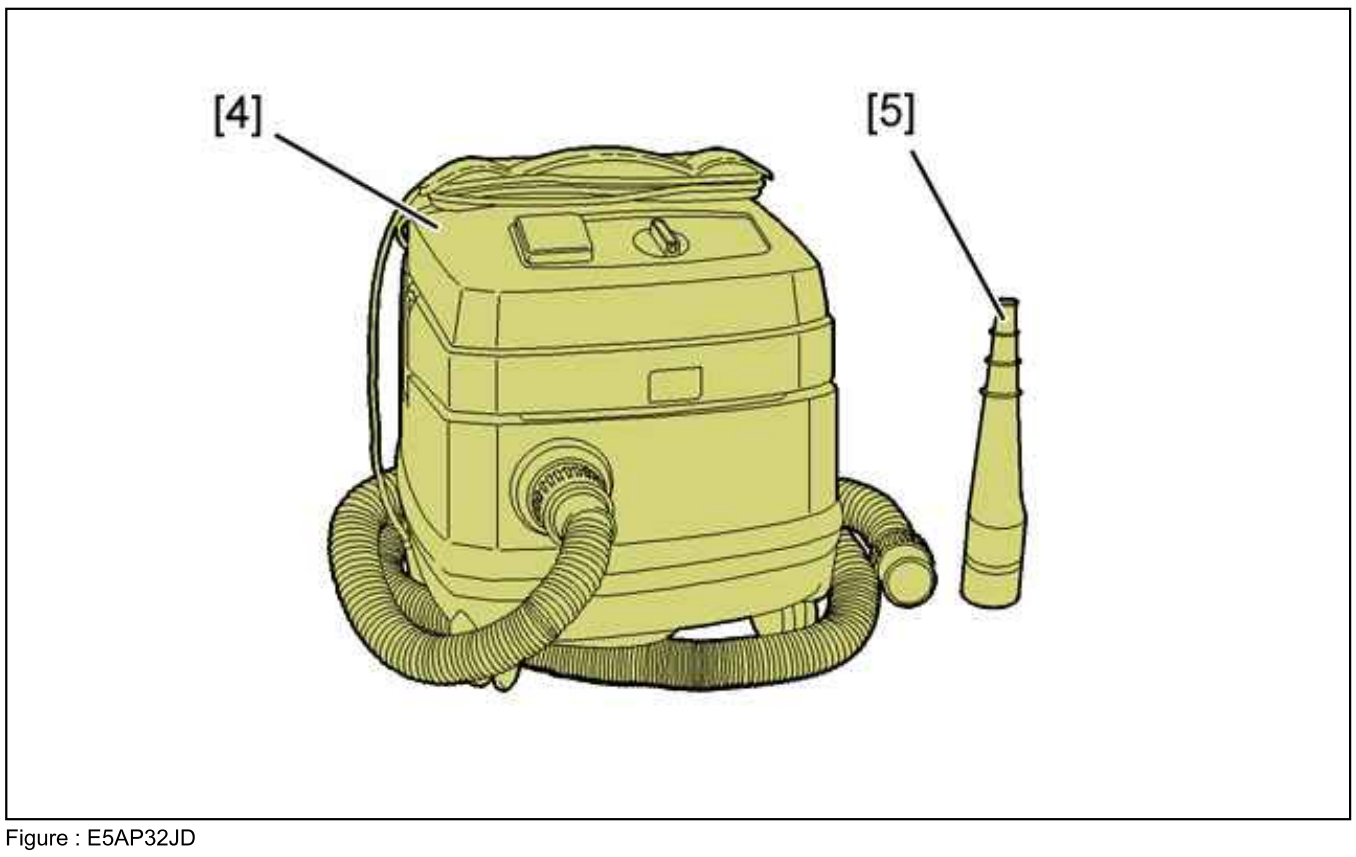

Figure : E5AP32JD

[4] Vacuum extractor .
[5] Round end-piece.

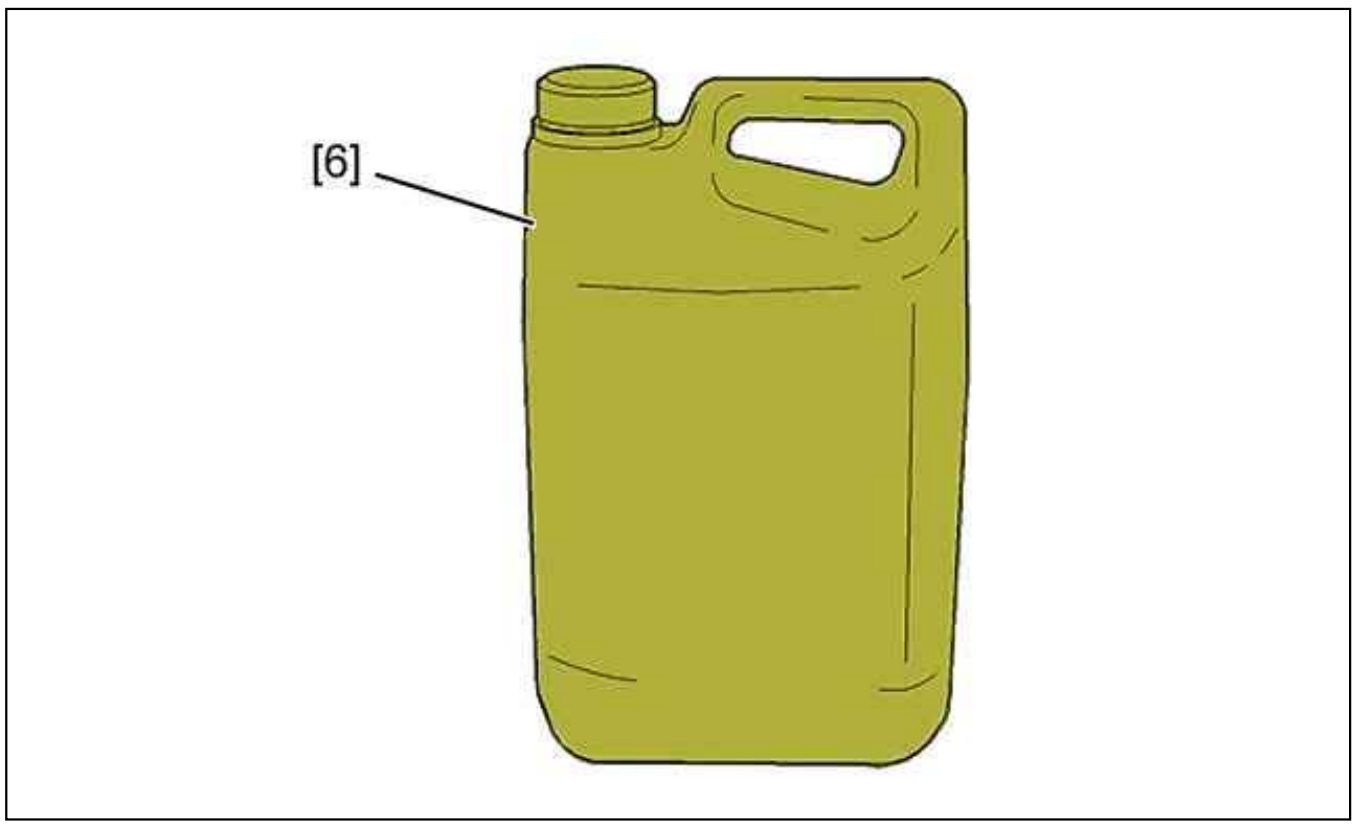

Figure : E5AB01GD

[6] Diesel substitute (kerdane-dilutine or paraffin).

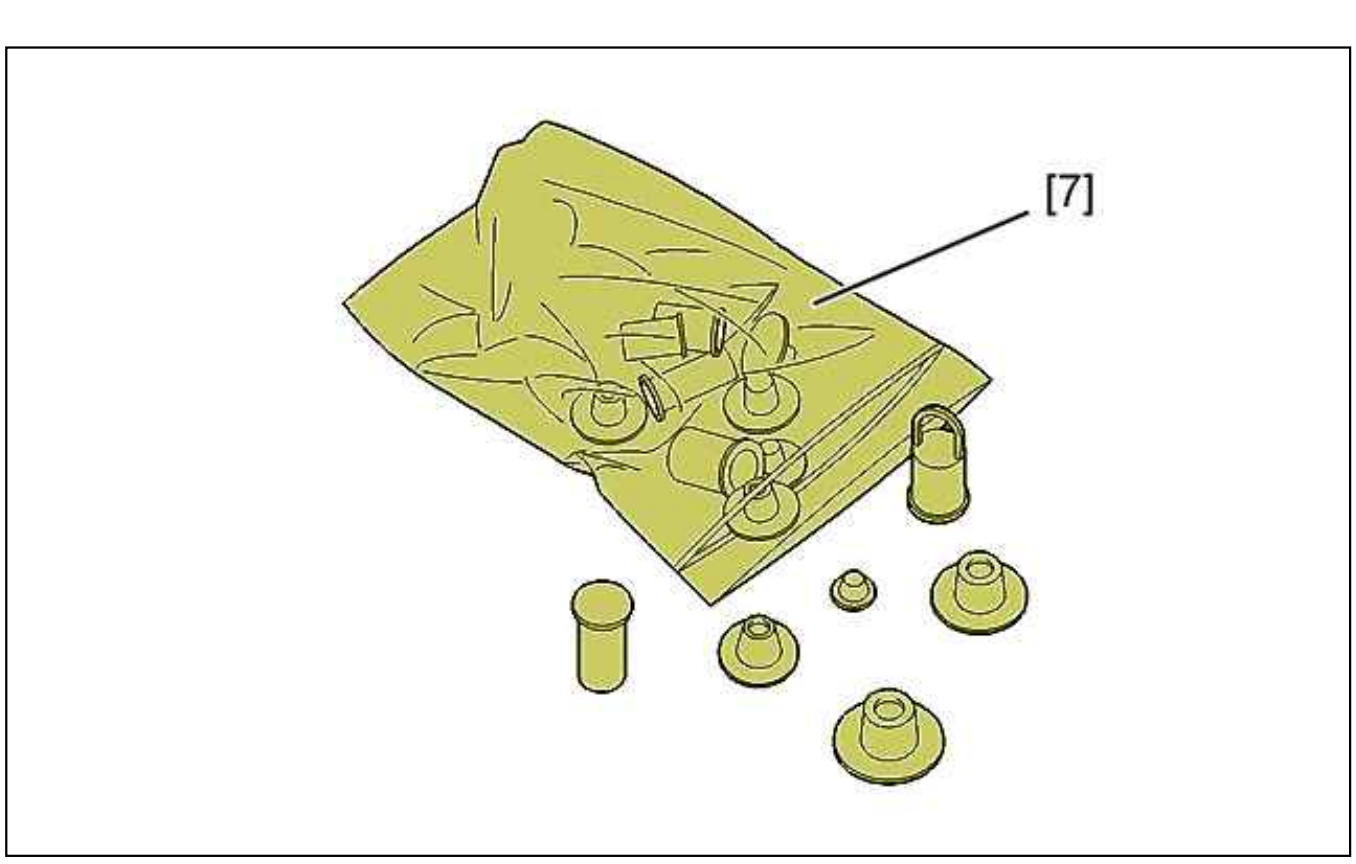

Figure : E5AP374D

[7] plugs kit (-).0188 T.

2. Removing

ESSENTIAL : Respect the safety and cleanliness recommendations that are specific to high pressure diesel injection (HDi) engines .

Put the vehicle on a hoist.
Disconnect the battery.
Remove the under engine protection .

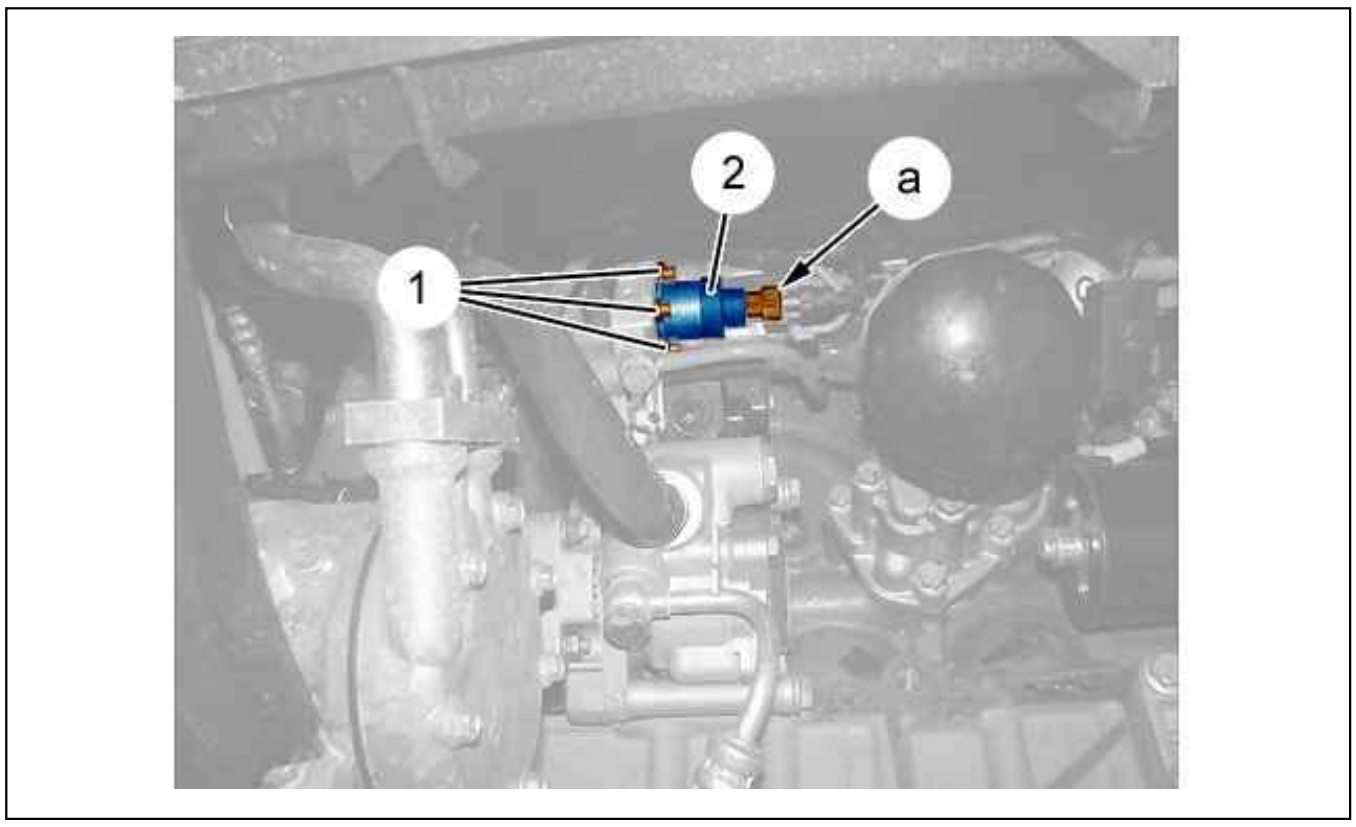

Figure : B1HG05QD

CAUTION : Fit the closer ; Using the tools [1], [2], [3], [4], [5].

Disconnect the connector (as "a").
Remove the 3 bolts (1).

CAUTION : Do not use a tool for removing the pressure regulator (Example : Rear left indicator lighting fault).

Remove the fuel pressure regulator (2) by hand, making half-turns from right to left, pulling at the same time.

CAUTION : Fit a closer in place of the pressure regulator ; Using tool [7].

3. Refitting

Remove the tool [7].

CAUTION : Using a mirror, check that there is no dirt in the pressure housing; clean if necessary.

CAUTION : Equip the pressure regulator with a ring and new seals. Fit the pressure regulator with a ring and new seals; lubricate the ring and the seals with vaseline (or similar).

Position the fuel pressure regulator (2) in its housing and push it in carefully.
Refit the 3 bolts (1) ; Tighten to the specified torque .
Connect the connector (as "a").

Reconnect the battery.

CAUTION : Perform the operations to be carried out following reconnection of the battery.

4. Operation check

Method of operation :

- Switch off ignition and restart 3 times
- Start the engine
- Accelerate the engine speed to 4000 rpm
- Carry out a road test of 30 km minimum
- During the road test make several stops and starts with the engine and acceleration manoeuvres with a full load

REMOVING - REFITTING : EGR (EXHAUST GAS RECYCLING) ELECTROVALVE

ESSENTIAL : Observe the safety and cleanliness recommendations .

1. Location

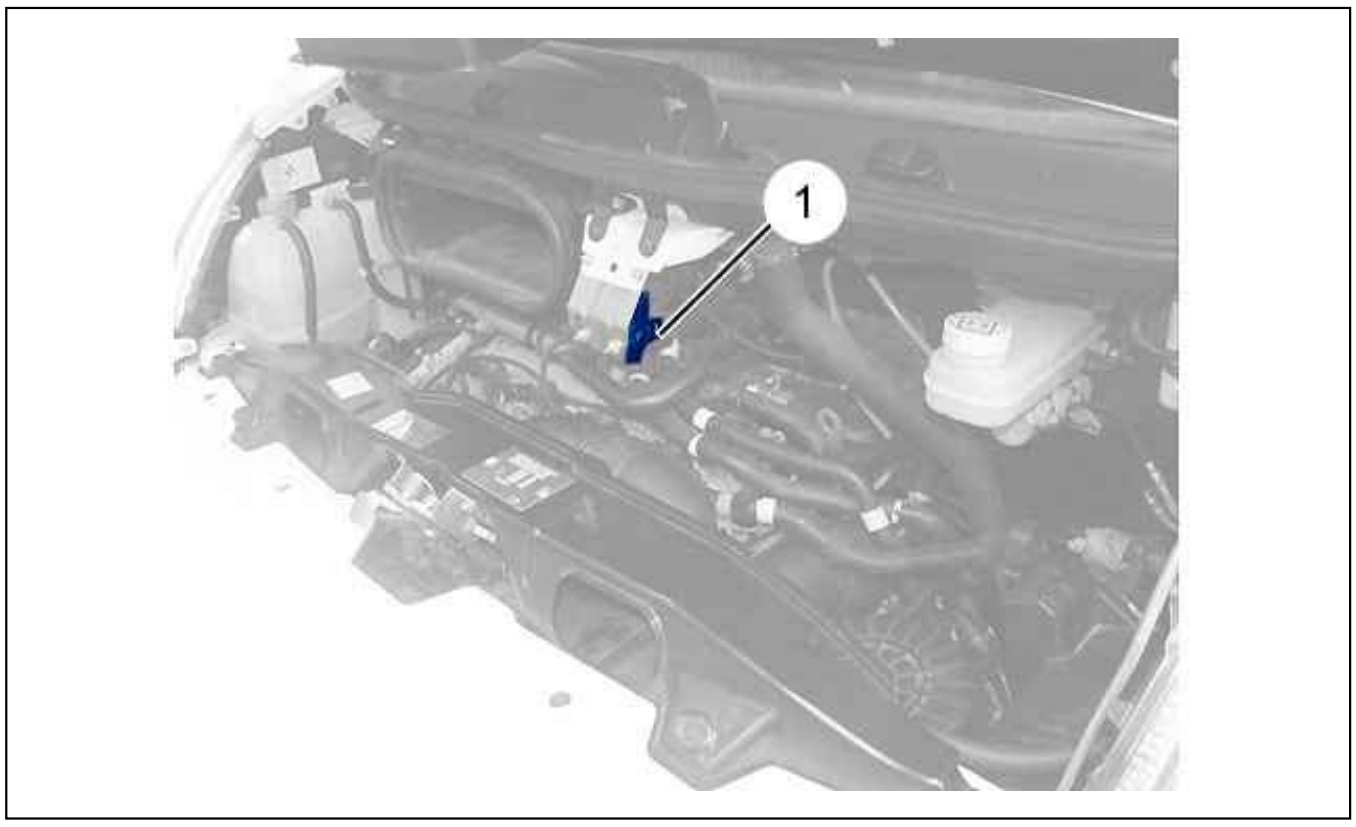

Figure : B1HG05RD

(1) Exhaust gas recycling solenoid valve .

2. Removing

Disconnect the battery.

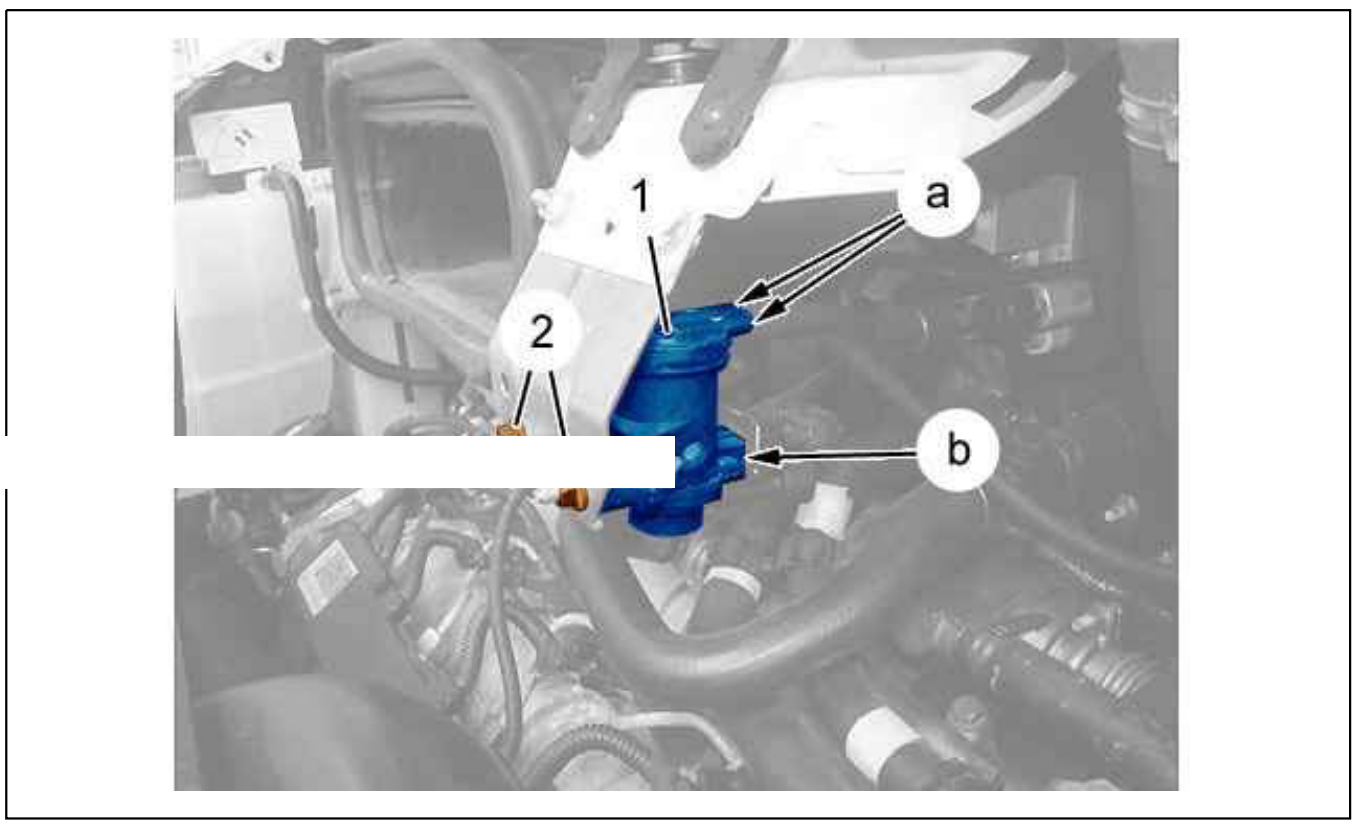

Figure : B1HG05SD

Disconnect the connector (at " b").

CAUTION : Mark the order of fitting the hoses (at " a") so as not to invert them when refitting.

Disconnect the 2 pipes (/) (as "a").
Remove :

- The 2 bolts (2)
- The EGR electrovalve (1)

3. Refitting

Refit :

- The EGR electrovalve (1)
- The 2 bolts (2)

Join the hoses (as "a").
Connect the connector (en "b").
Reconnect the battery.

CAUTION : Perform the operations to be carried out following reconnection of the battery.

REMOVING - REFITTING : CYLINDER REFERENCE SENSORS

ESSENTIAL : Observe the safety and cleanliness recommendations .

1. Location

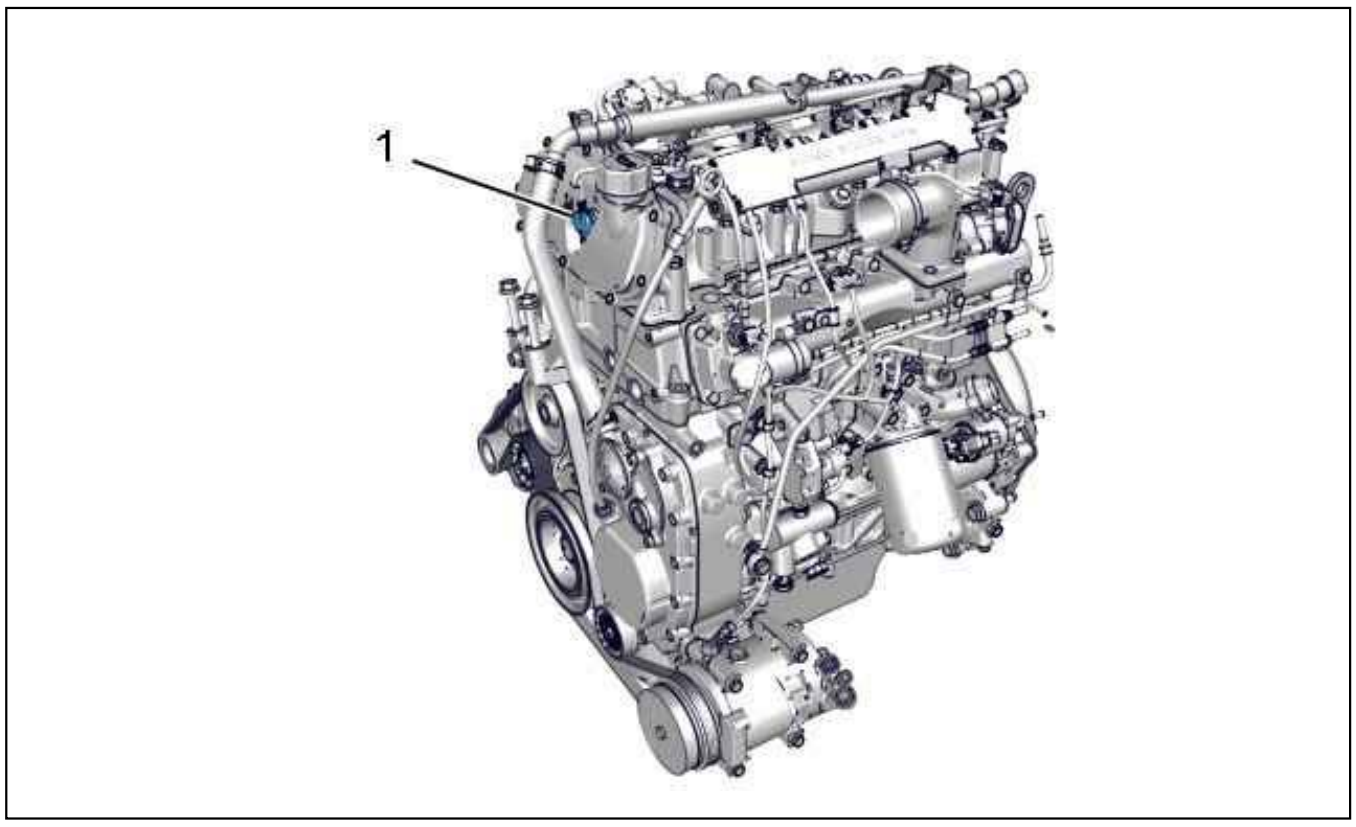

Figure : B1CG00DD

(1)Cylinder reference sensor .

2. Removing

Disconnect the battery.

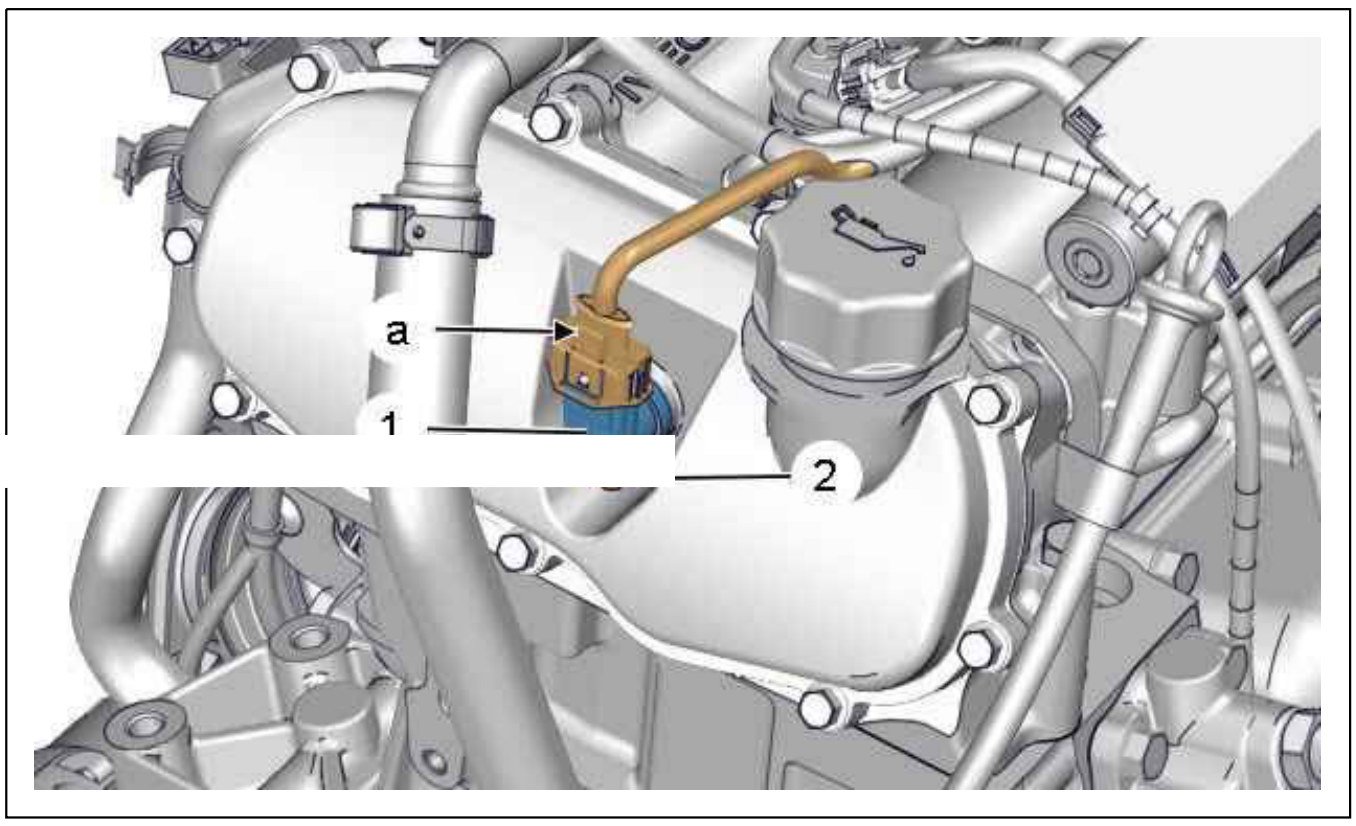

Figure : B1HG05VD

Disconnect the connector (at "a").
Remove :

- The (2) bolt
- The cylinder reference sensor (1)

3. Refitting

Refit :

- The cylinder reference sensor (1) (equipped with a new seal)
- The (2) bolt

Connect the connector (at "a").
Reconnect the battery.

CAUTION : Perform the operations to be carried out following reconnection of the battery.

REMOVING - REFITTING : FUEL TEMPERATURE SENSOR

ESSENTIAL : Observe the safety and cleanliness recommendations .

1. Location

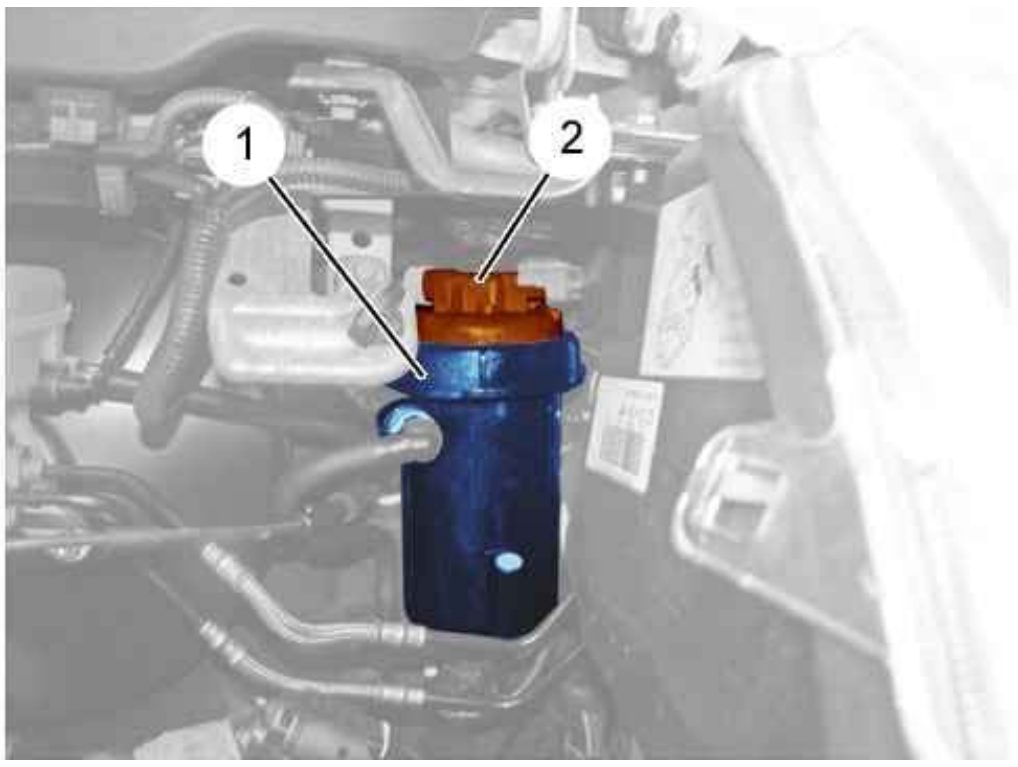

Figure : B1HG067D

(1)Fuel filter .
(2)Fuel temperature sensor .

2. Removing

ESSENTIAL : Respect the safety and cleanliness recommendations that are specific to high pressure diesel injection (HDi) engines .

CAUTION : Do not separate the fuel temperature sensor (2) and the fuel filter (1).

Remove the fuel filter (2) .

3. Refitting

N.B. : Replace the fuel filter if the fuel temperature sensor is faulty.

Refit the fuel filter (2) .

REMOVING - REFITTING : ENGINE SPEED SENSOR

ESSENTIAL : Observe the safety and cleanliness recommendations .

1. Location

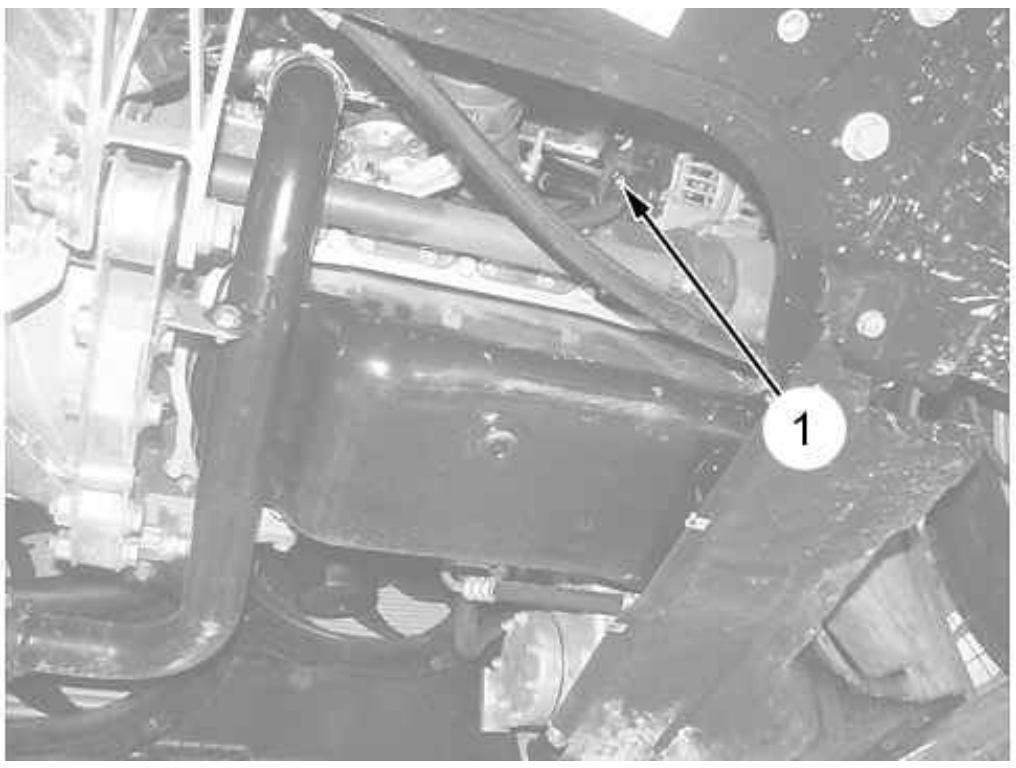

Figure : B1HG05ZD

(1) Engine speed sensor .

2. Removing

Put the vehicle on a hoist.
Disconnect the battery.
Remove the under engine protection .

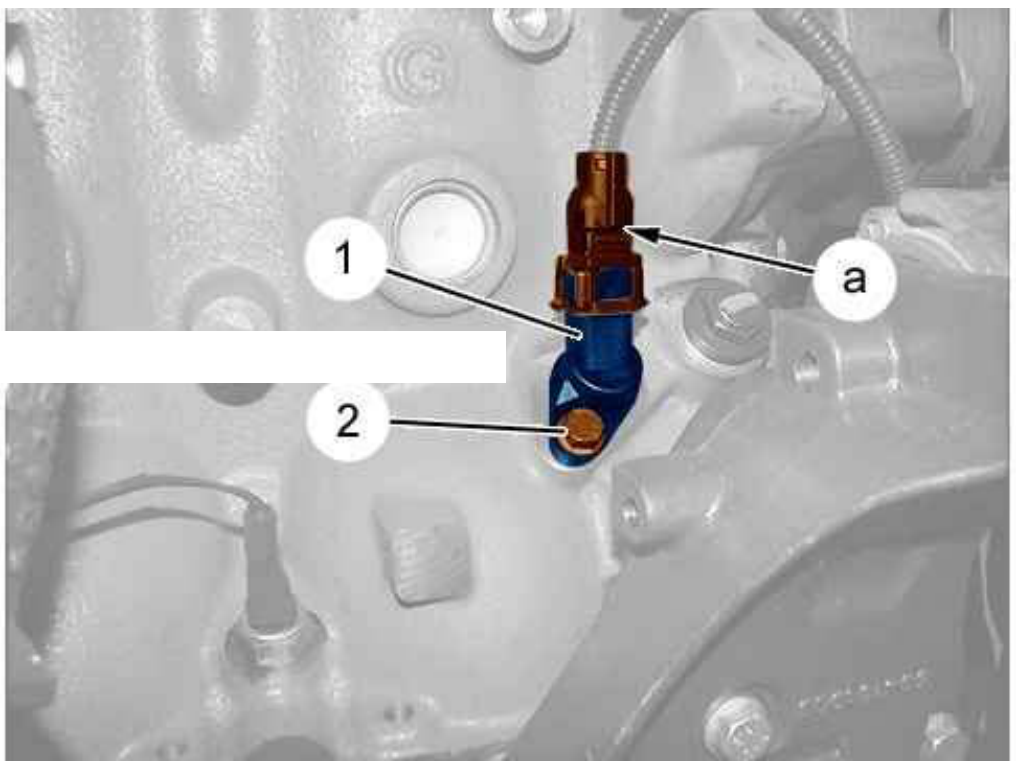

Figure : B1HG060D

Disconnect the connector (at "a").
Remove :

- The (2) bolt
- The engine speed sensor (1)

3. Refitting

Refit :

- The engine speed sensor (1) (equipped with a new seal)
- The (2) bolt

Connect the connector (at "a").
Refit the under-engine protection .
Return the vehicle to its wheels.

CAUTION : Perform the operations to be carried out following reconnection of the battery.

Reconnect the battery.

REMOVING - REFITTING : ENGINE ECU

ESSENTIAL : Observe the safety and cleanliness recommendations .

CAUTION : Before adding or replacing any parts, ensure that the customer has not lost their confidential card.

1. Location

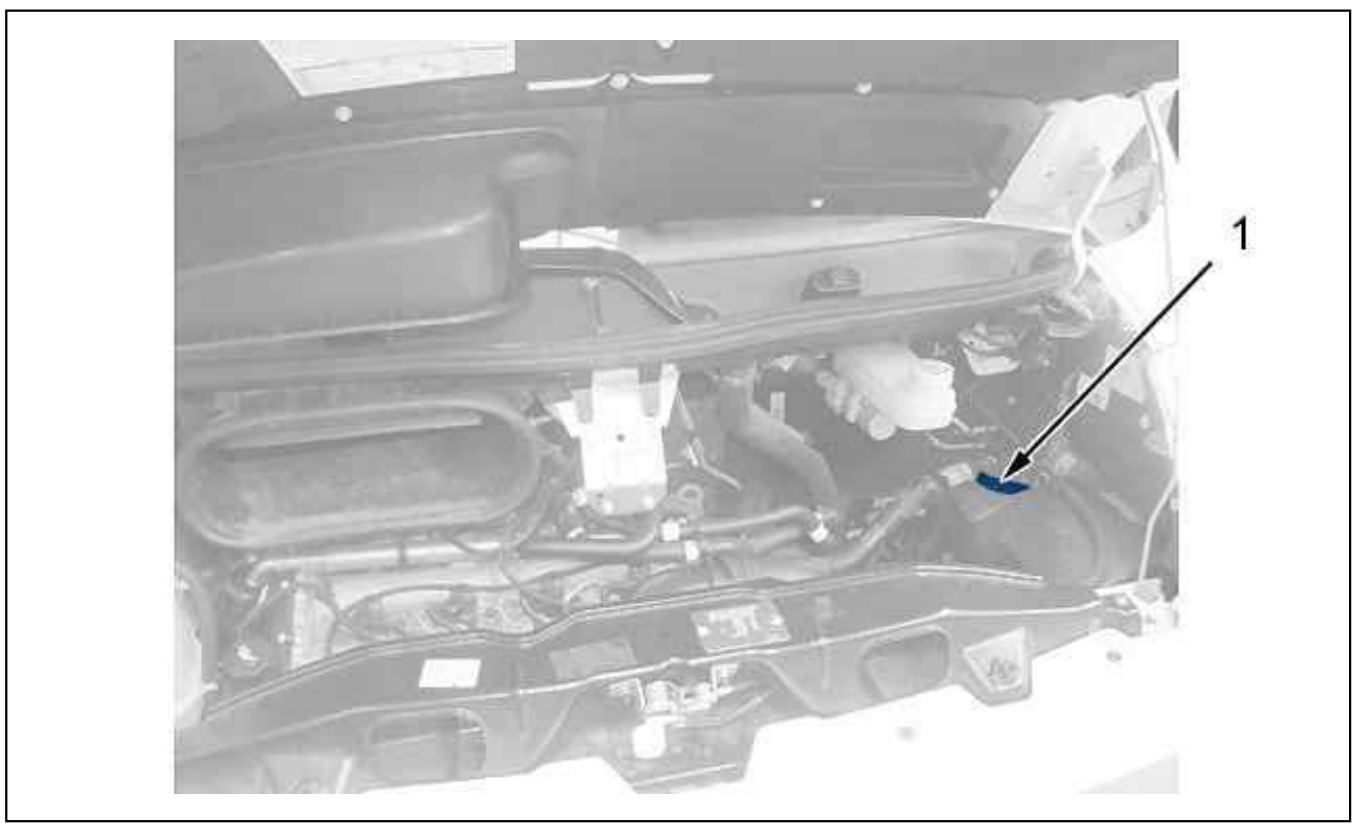

Figure : B1HG062D

(1)Engine ECU .

2. Removing

Disconnect the battery.

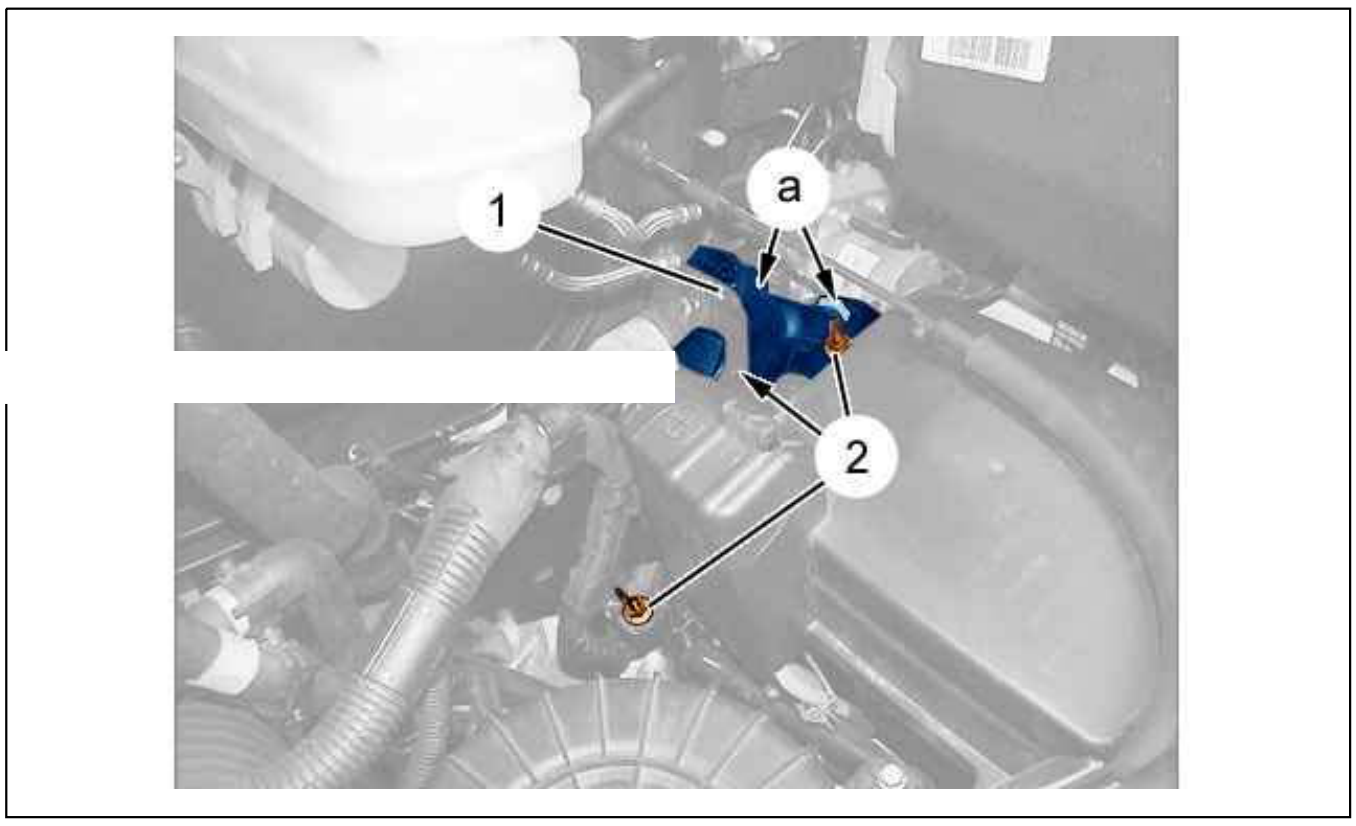

Figure : B1HG063D

Disconnect the connectors (en "a").
Remove :

- The 3 bolts (2)
- The engine management ECU (1) (With its mounting)

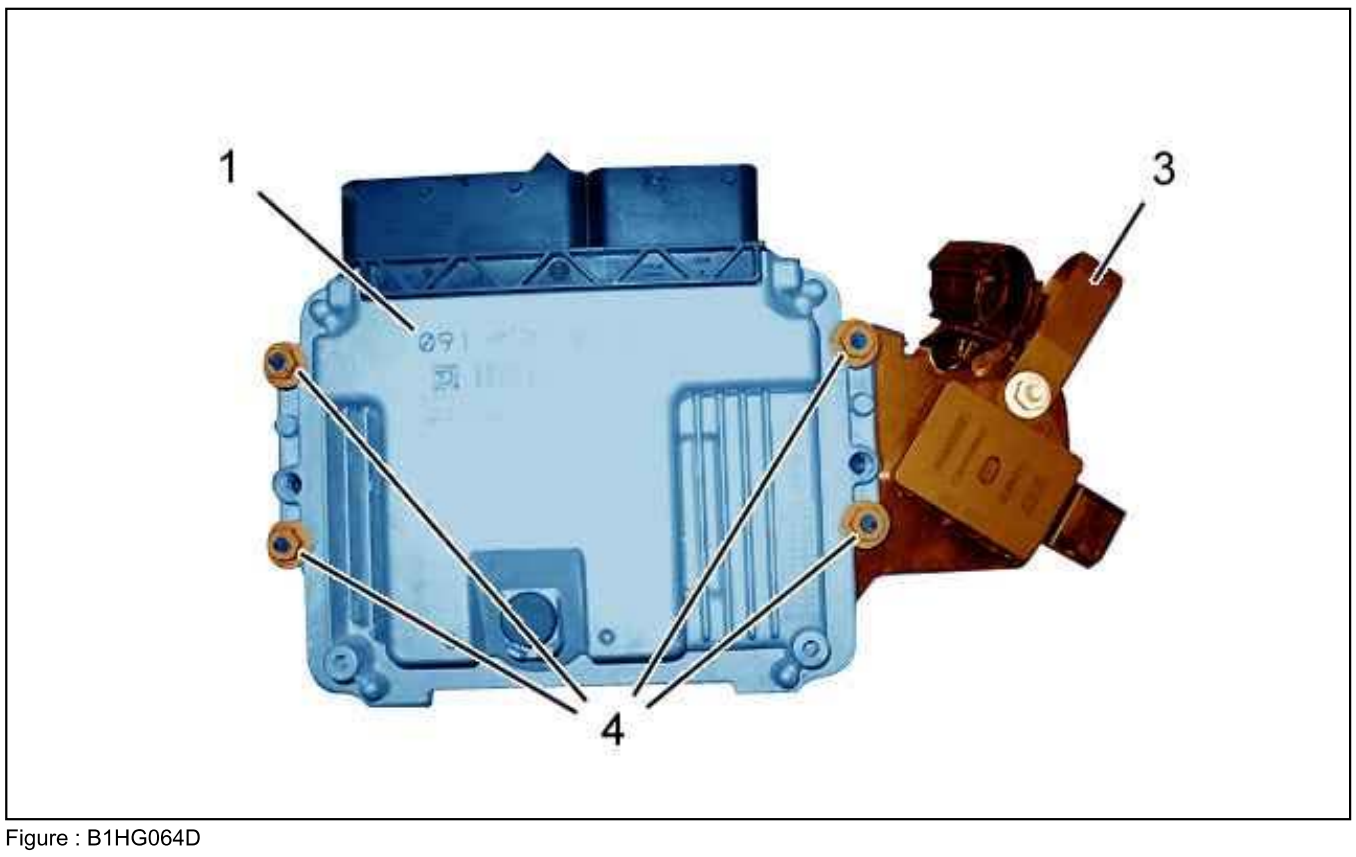

Figure : B1HG064D

Remove the nuts (4).
Remove the engine management ECU (1) from its mounting (3).

3. Refitting

Refit the engine ECU (1) on its support (3).
Refit :

- The nuts (4)
- The engine management ECU (1) (With its mounting)
- The 3 bolts (4)

Connect the connectors (at "a").
Reconnect the battery.

CAUTION : Perform the operations to be carried out following reconnection of the battery.

4. Operations to be performed : After replacing the engine management ECU

CAUTION : Always carry out the following operations after replacing an ECU.

CAUTION : Swapping an engine management ECU between two vehicles means that it will be impossible to start the vehicles.

When changing an engine management ECU, it is necessary to carry out using the diagnostic tool the procedure for the replacement of an engine management ECU from the "replacement parts" menu.
Conditions to be met to carry out the procedure :

- Be in possession of the access code to the built-in systems interface (written on the customer’s confidential card)
- Be in possession of a new engine management ECU
- Use the diagnostic tool

5. Engine management ECU downloading

The engine management ECU software is updated by downloading (ECU fitted with a flash EPROM).

N.B. : This operation is performed using diagnostic equipment.

Download to the engine management ECU (if necessary).

6. Procedures for returning under warranty

Disconnecting the engine management ECU results in it being locked automatically.

CAUTION : If a part is returned under warranty, return the engine management ECU with the access code.

REMOVING - REFITTING : INLET AIR PRESSURE SENSOR

ESSENTIAL : Observe the safety and cleanliness recommendations .

1. Location

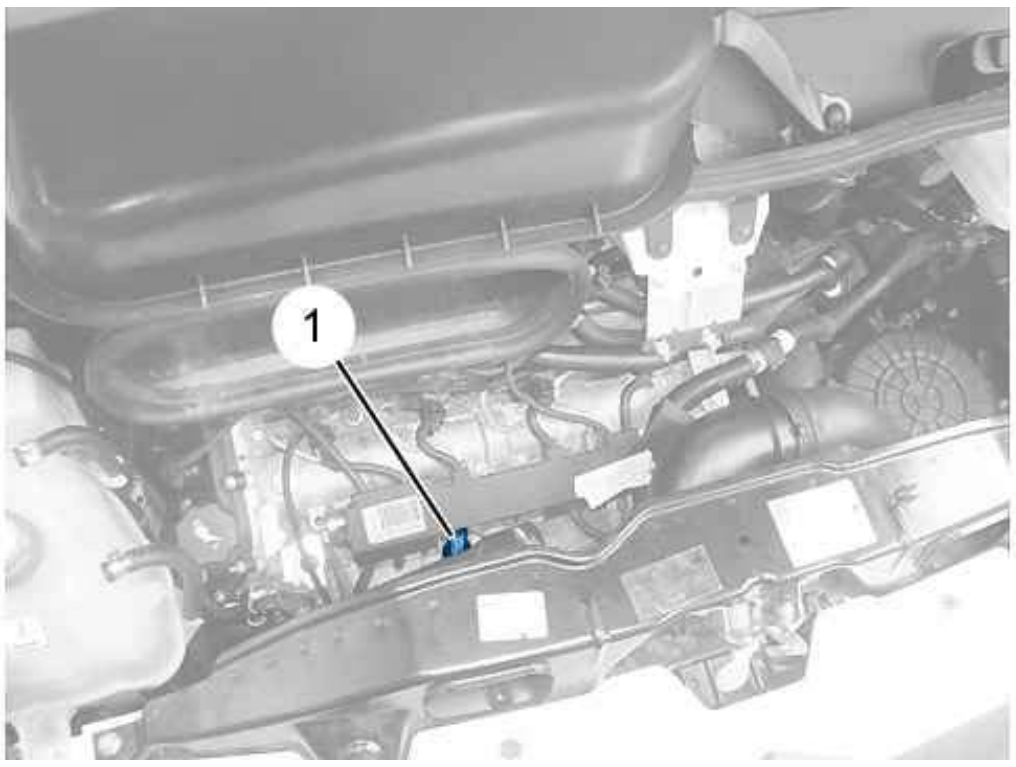

Figure : B1HG066D

(1) Inlet air pressure sensor.

2. Removing

Disconnect the battery.

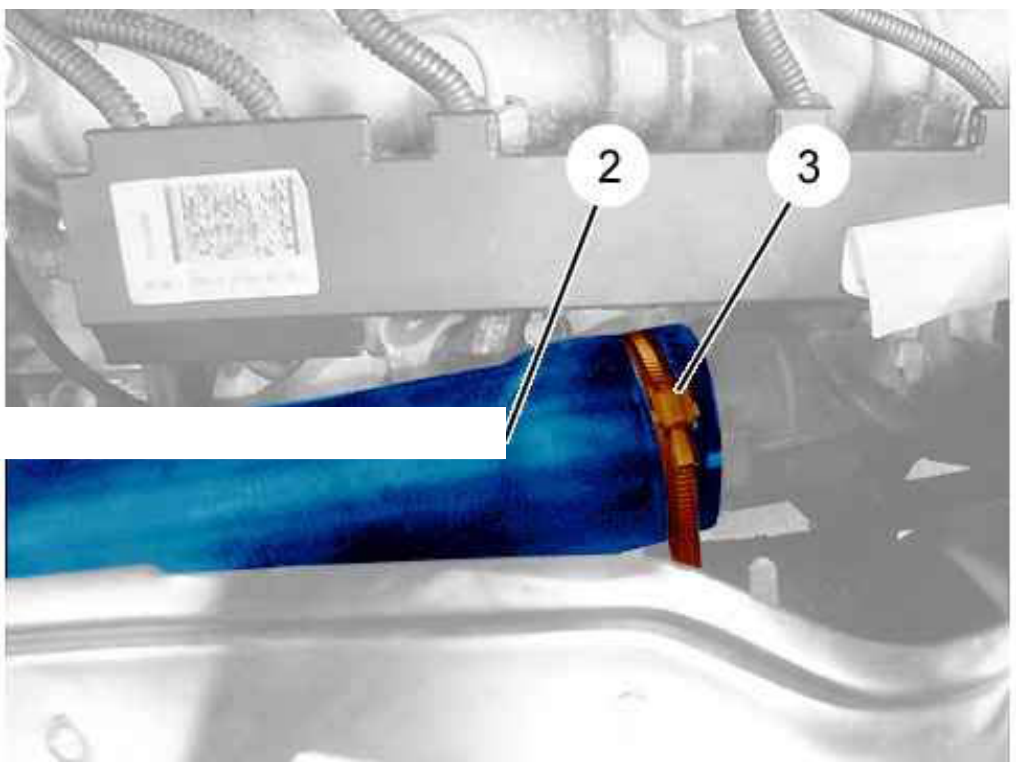

Figure : B1HG068D

Remove : The clip on the air inlet pipe (3).
Detach and move aside : The air inlet pipe (2).

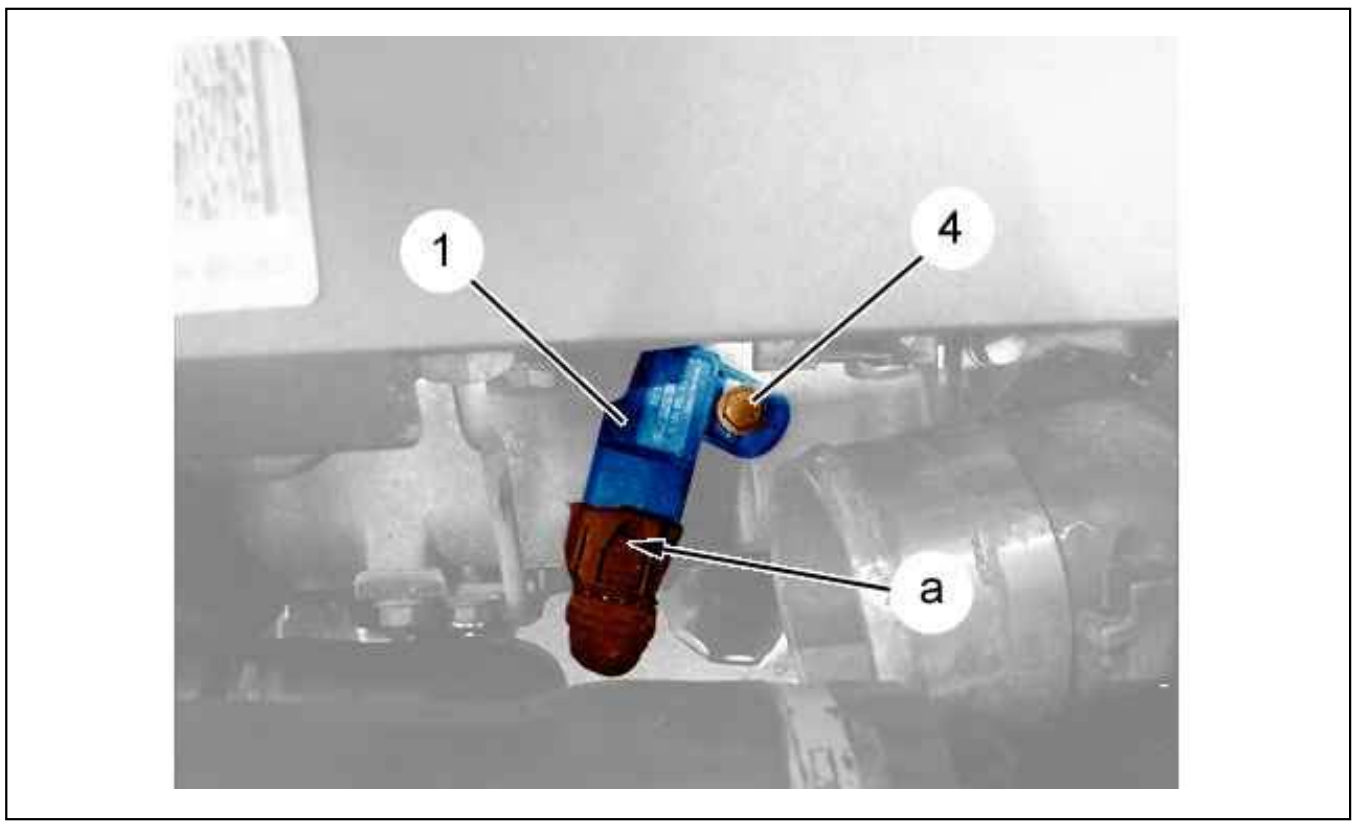

Figure : B1HG06AD

Disconnect the connector (as "a").
Remove :

- The (4) bolt
- The air intake pressure sensor (1)

3. Refitting

Refit :

- The air intake pressure sensor (1); (equipped with a new seal)
- The (4) bolt

Connect the connector (as "a").
Couple up : The air inlet pipe (2).
Replace : The clip on the air inlet pipe (3) (If necessary).

CAUTION : Perform the operations to be carried out following reconnection of the battery.

Reconnect the battery.

REMOVING - REFITTING : HIGH PRESSURE FUEL SENSOR

ESSENTIAL : Observe the safety and cleanliness recommendations .

1. Location

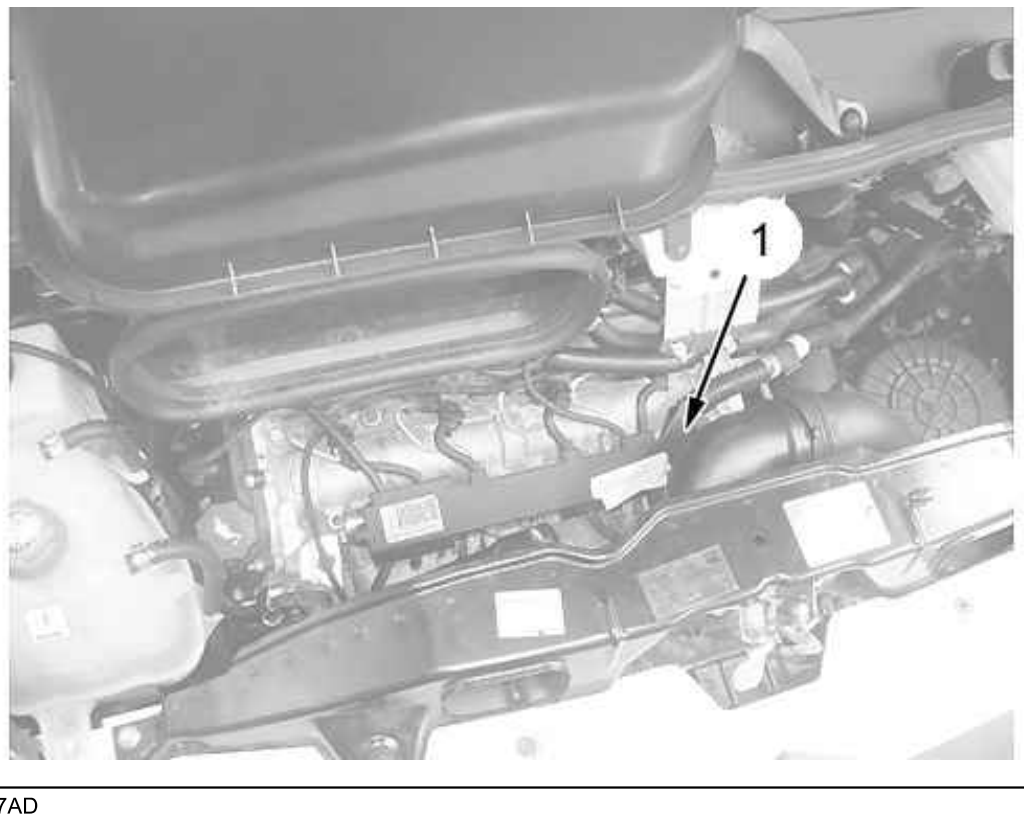

Figure : B1HG07AD

(1) High pressure fuel sensor .

2. Tooling

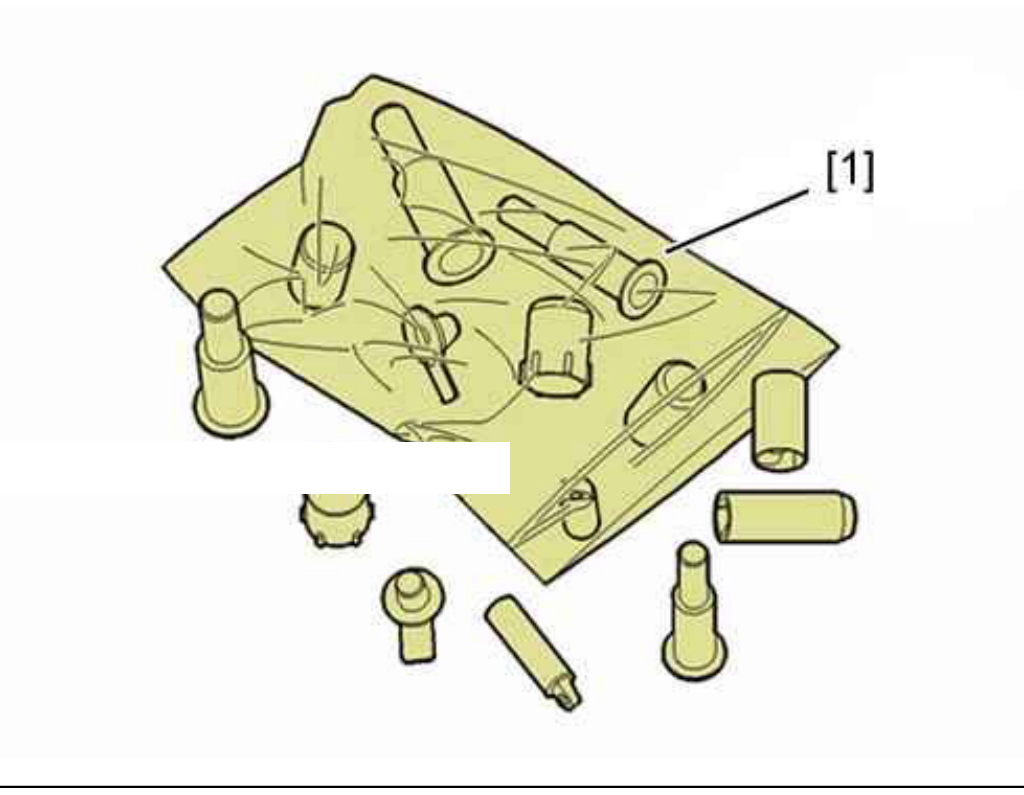

Figure : E5AG00KD

[1] plugs kit (-).0188 T.

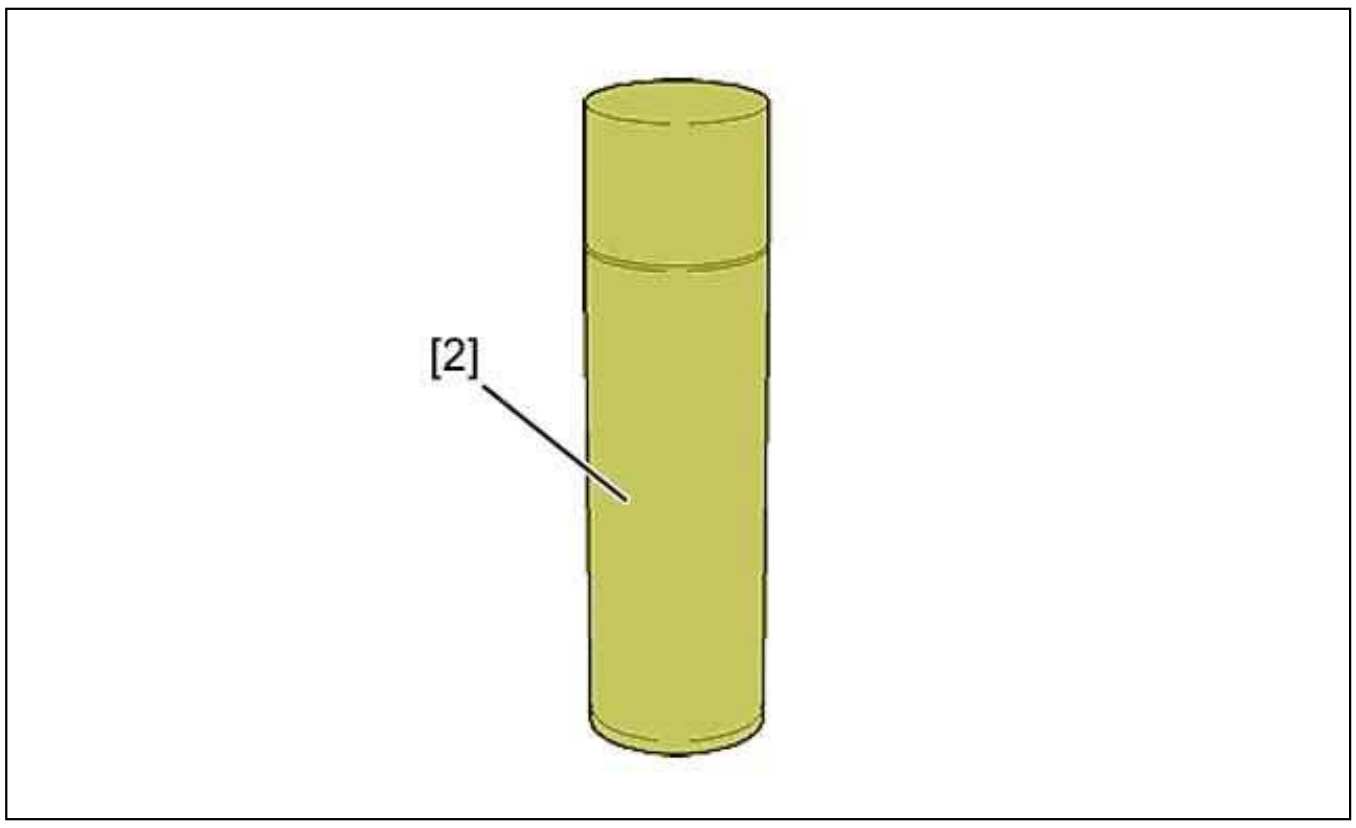

Figure : E5AG00LD

[2] leak detector ARDROX 9D1 BRENT.

3. Removing

ESSENTIAL : Respect the safety and cleanliness recommendations that are specific to high pressure diesel injection (HDi) engines .

Disconnect the battery.

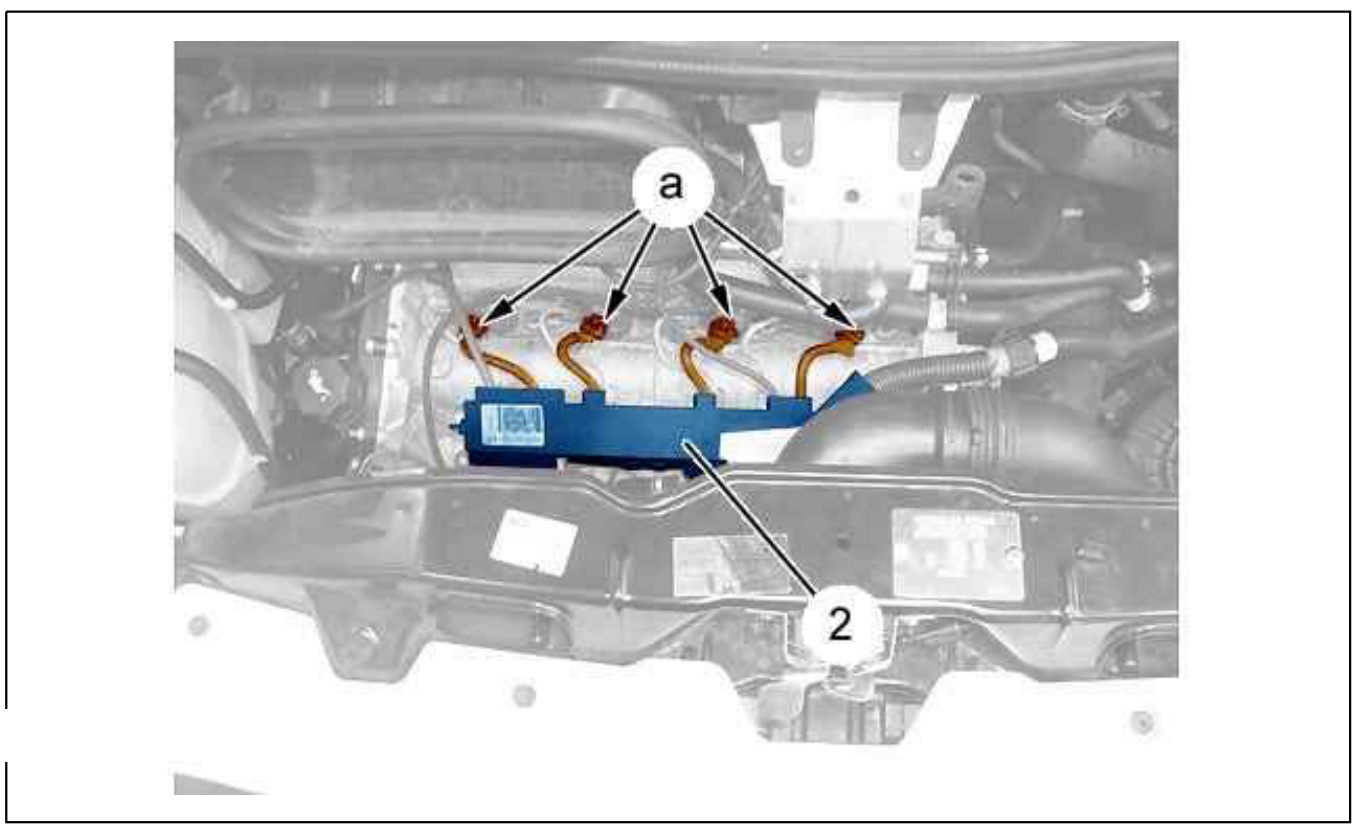

Figure : B1HG07BD

Disconnect the connectors of the injectors (as "a").
Move aside the injection harness (2).

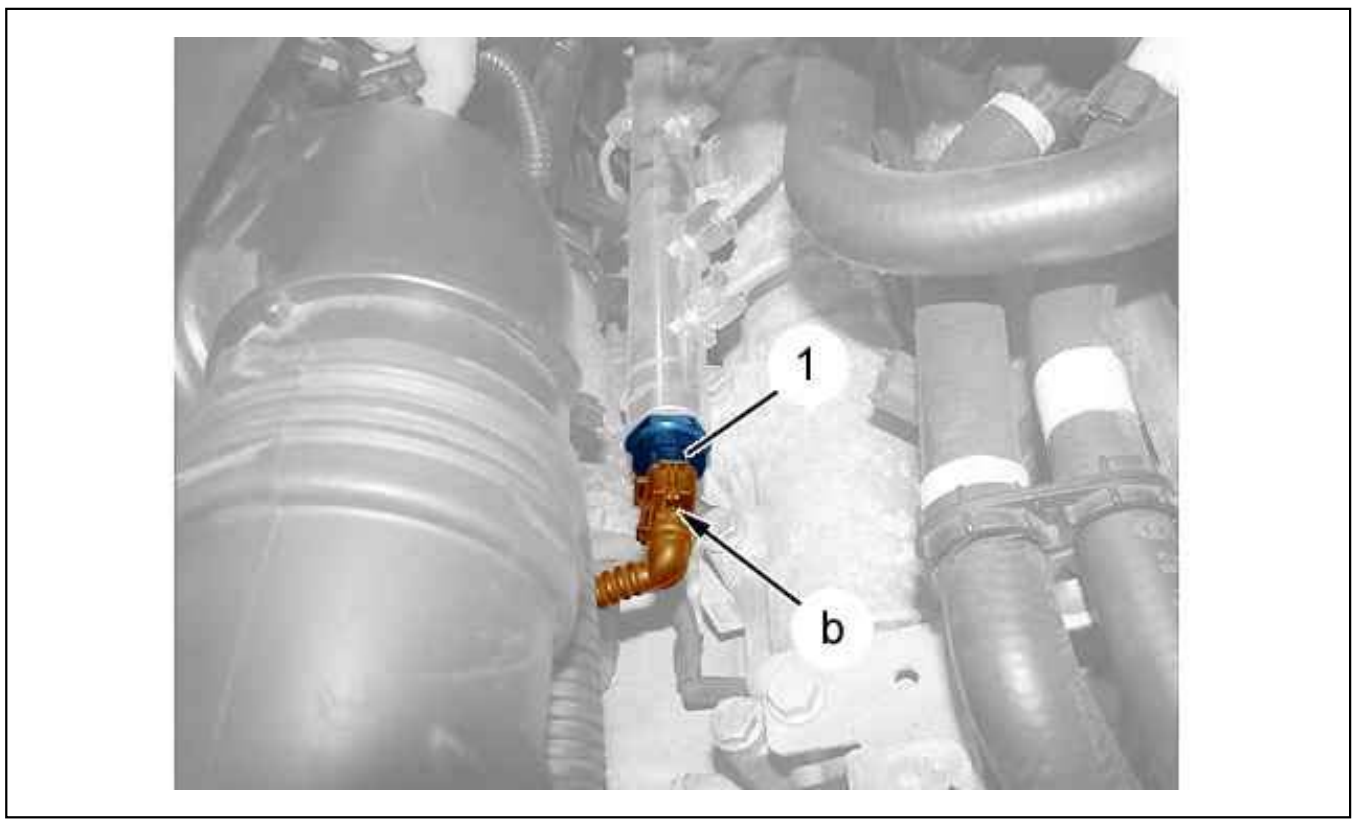

Figure : B1HG07CD

Disconnect the connector (as "b").
Remove : The high pressure fuel sensor (1).
Plug the fuel high pressure common injection rail ; Using tool [1].

4. Refitting

Remove the tool [1] (fuel high pressure common injection rail).
Refit : The high pressure fuel sensor (1) (With a new seal) ; Tighten to the specified torque .
Connect the connector (as "b").
Position : The injection harness (2).
Connect : The connectors of the injectors (as "a").

CAUTION : Perform the operations to be carried out following reconnection of the battery.

Reconnect the battery.

5. Checking for leaks

Spray the product 2 on the high pressure sensor connector.
Allow the product to dry.
Start the engine.
Check the absence of leaks.
Accelerate up to an engine speed of 4000 rpm.
Check the absence of leaks.
Carry out a road test.
Check the absence of leaks.
Replace any defective parts (if necessary).

REMOVING - REFITTING : AIR FLOW METER / INLET AIR TEMPERATURE SENSOR

ESSENTIAL : Observe the safety and cleanliness recommendations .

1. Location

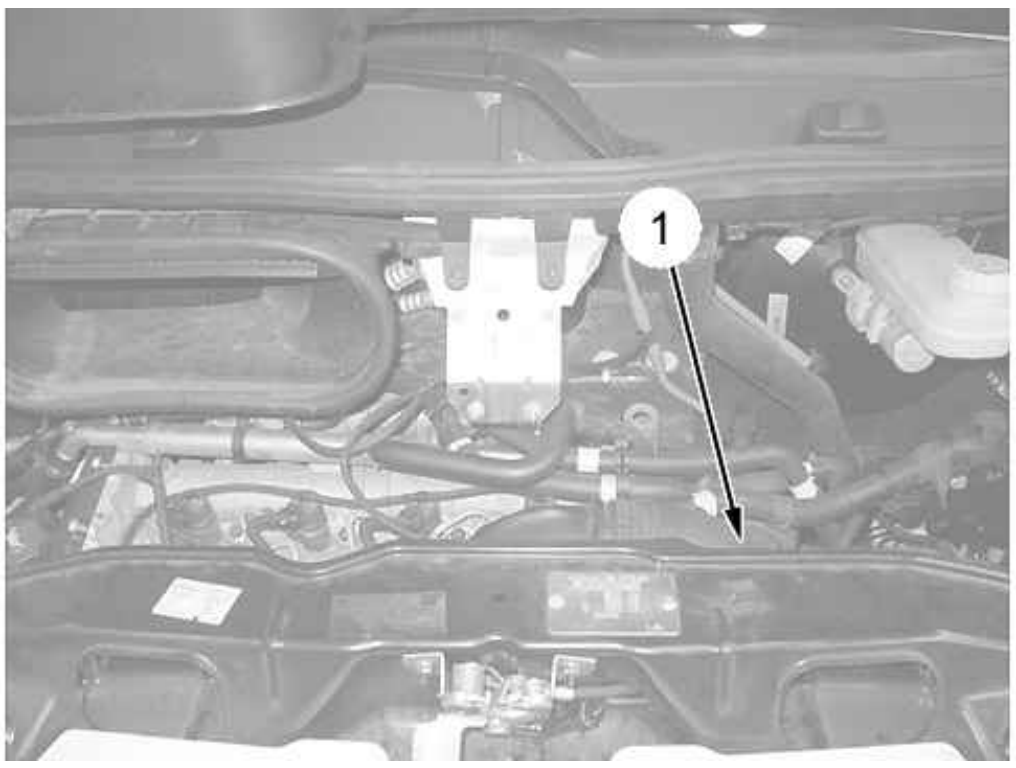

Figure : B1HG09UD

(1) Air flow meter / Intake air temperature sensor.

2. Removing

Disconnect the battery.

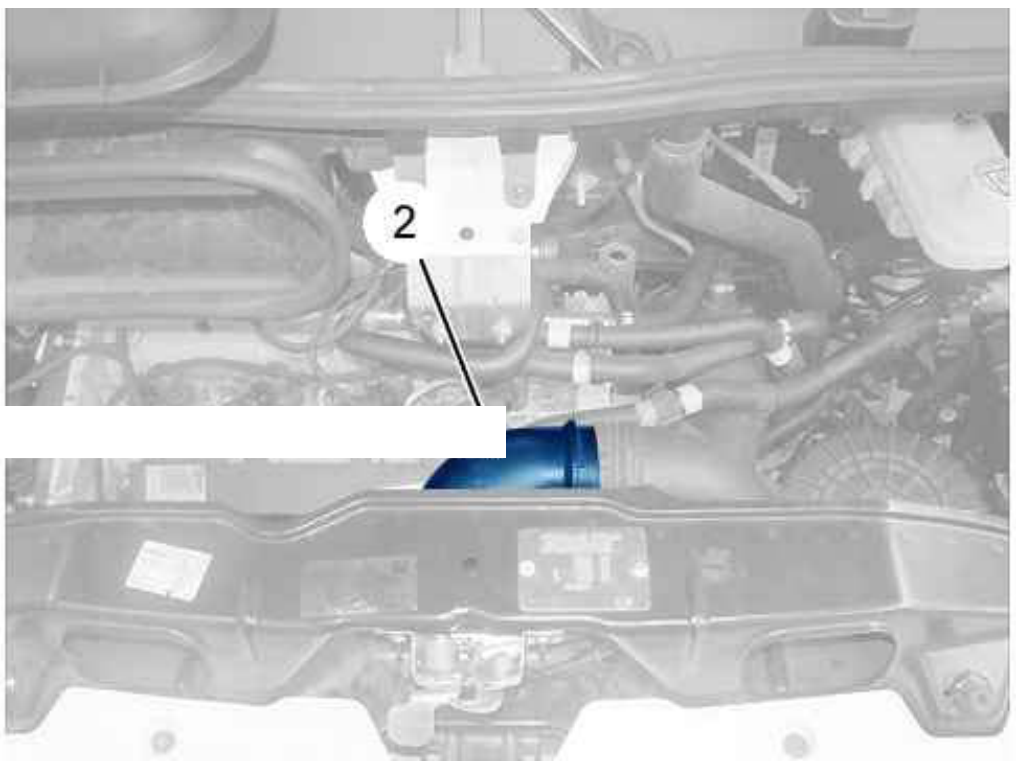

Figure : B1HG09ZD

Remove the air supply pipe (2).

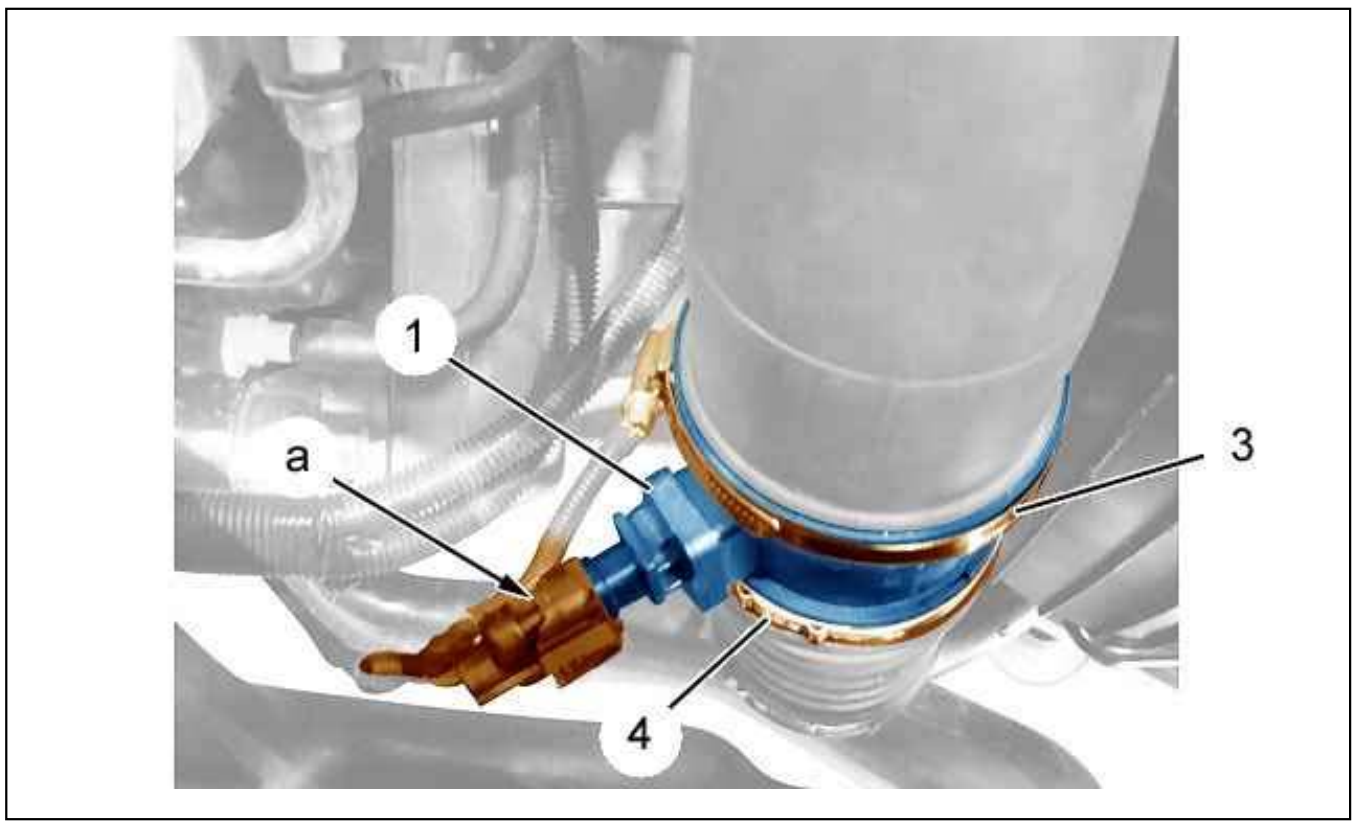

Figure : B1HG0A4D

Disconnect the connector (at "a").
Remove the clips (3) and (4).
Remove the assembly : Air flow meter / Inlet air temperature sensor (1).

3. Refitting

Refit the assembly : Air flow meter / Inlet air temperature sensor (1).
Refit the clips (3) and (4) ; (Replace the clips if necessary).
Connect the connector (at "a").
Refit : The air inlet pipe (2).

CAUTION : Perform the operations to be carried out following reconnection of the battery.

Reconnect the battery.
Initialisation of the air flow sensor : Using the diagnostic tool, program the autoadaptives.

REMOVING - REFITTING : AIR FLOW METER

ESSENTIAL : Observe the safety and cleanliness recommendations .

1. Location

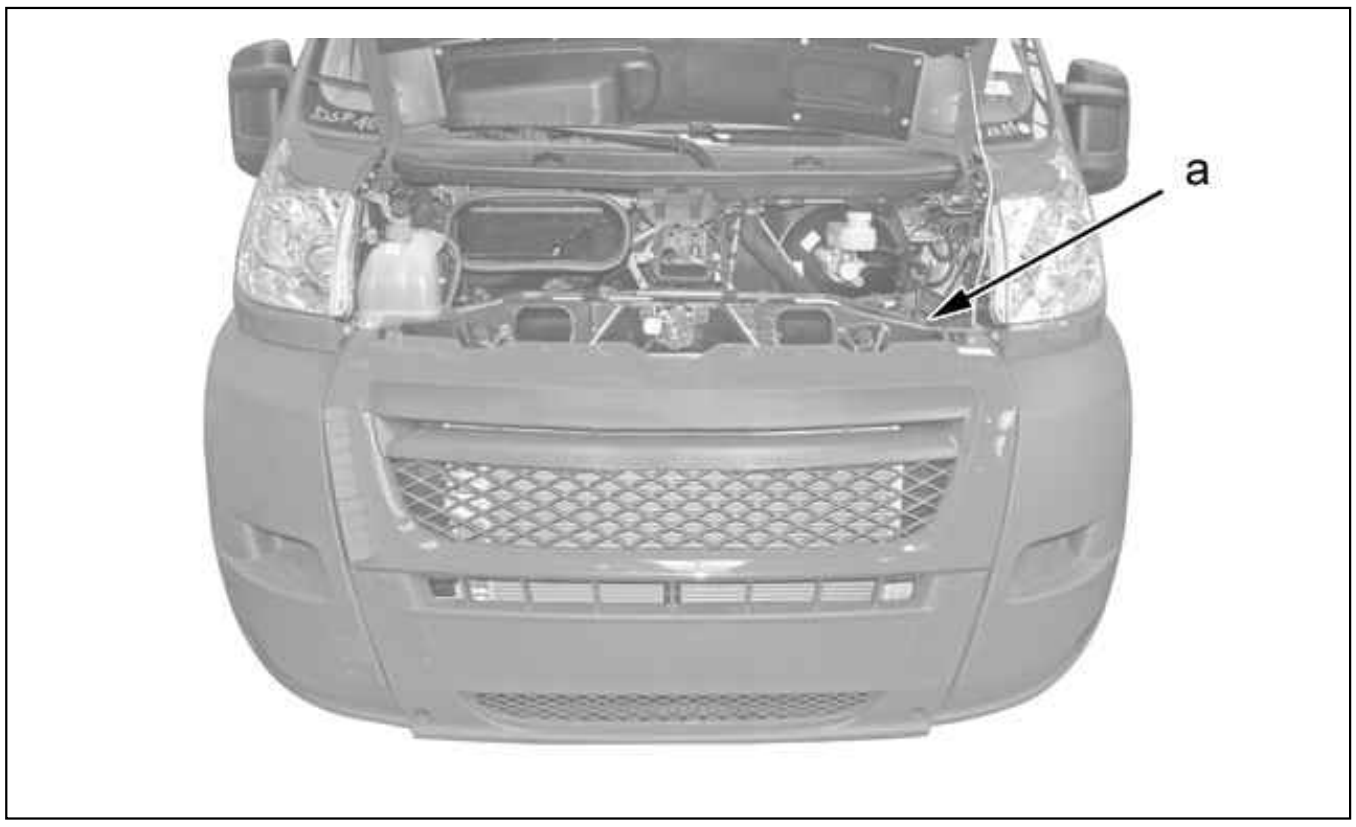

Figure : B1HG35AD

The flow meter is located underneath the air filter air outlet duct (at "a").

2. Removing

Disconnect the battery.

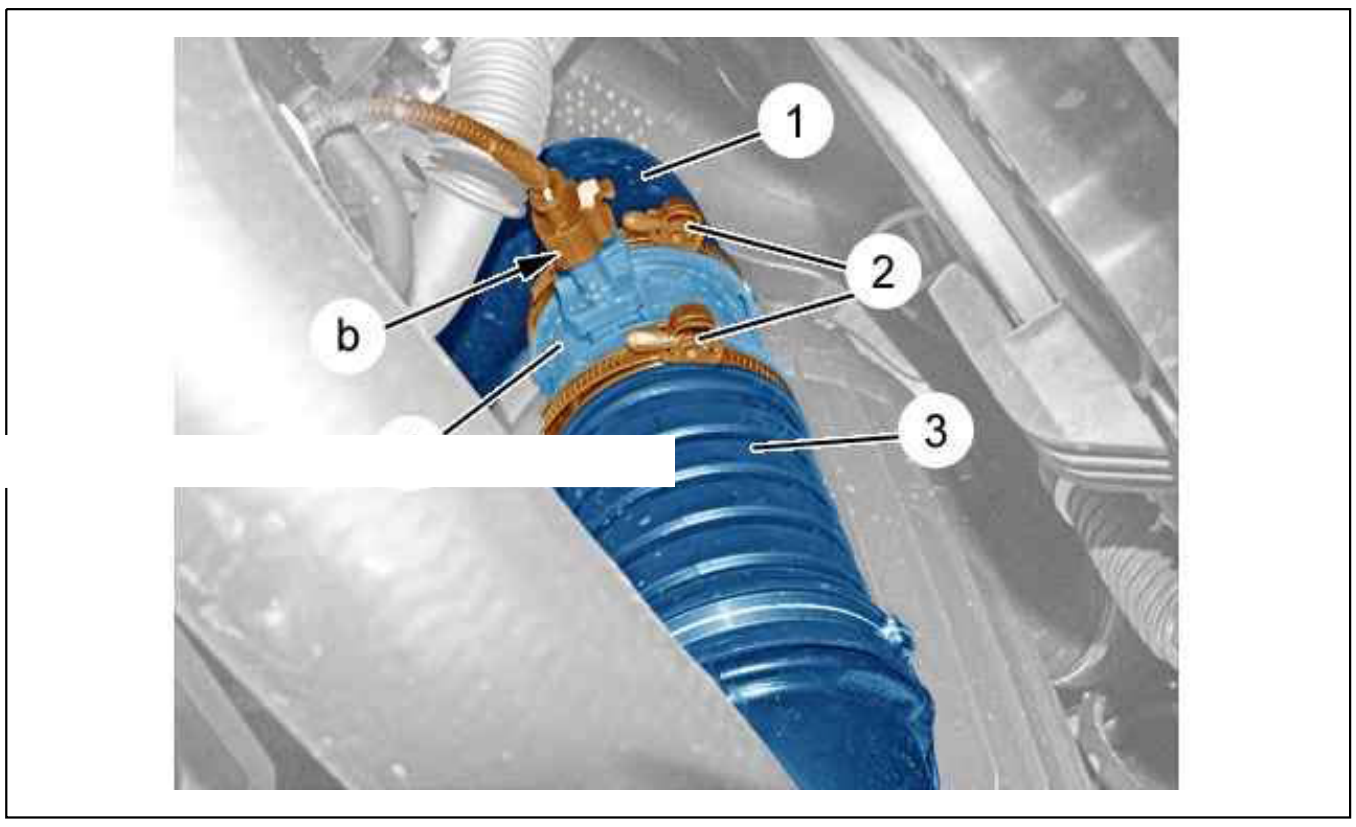

Figure : B1HG35DD

Chock and lift the vehicle on a 2 column lift.
Remove the under engine protection .
From under the vehicle.
Disconnect the connector (at "b").
Loosen the clips (2).
Uncouple the flow meter (4) from the ducts (1), (3).
Remove : The flow meter (4).

3. Refitting

Refit : The flow meter (4).
Couple the flow meter (4) to the ducts (1), (3).
Re-tighten : The clips (2).
Reconnect the connector (at "b").
Refit :

- The protective panel under the engine
- The vehicle to its wheels

CAUTION : Perform the operations to be carried out following reconnection of the battery.

Reconnect the battery.

REMOVING - REFITTING : CAMSHAFT POSITION SENSOR

ESSENTIAL : Ensure that the precautions relating to safety and cleanliness are adhered to .

1. Location

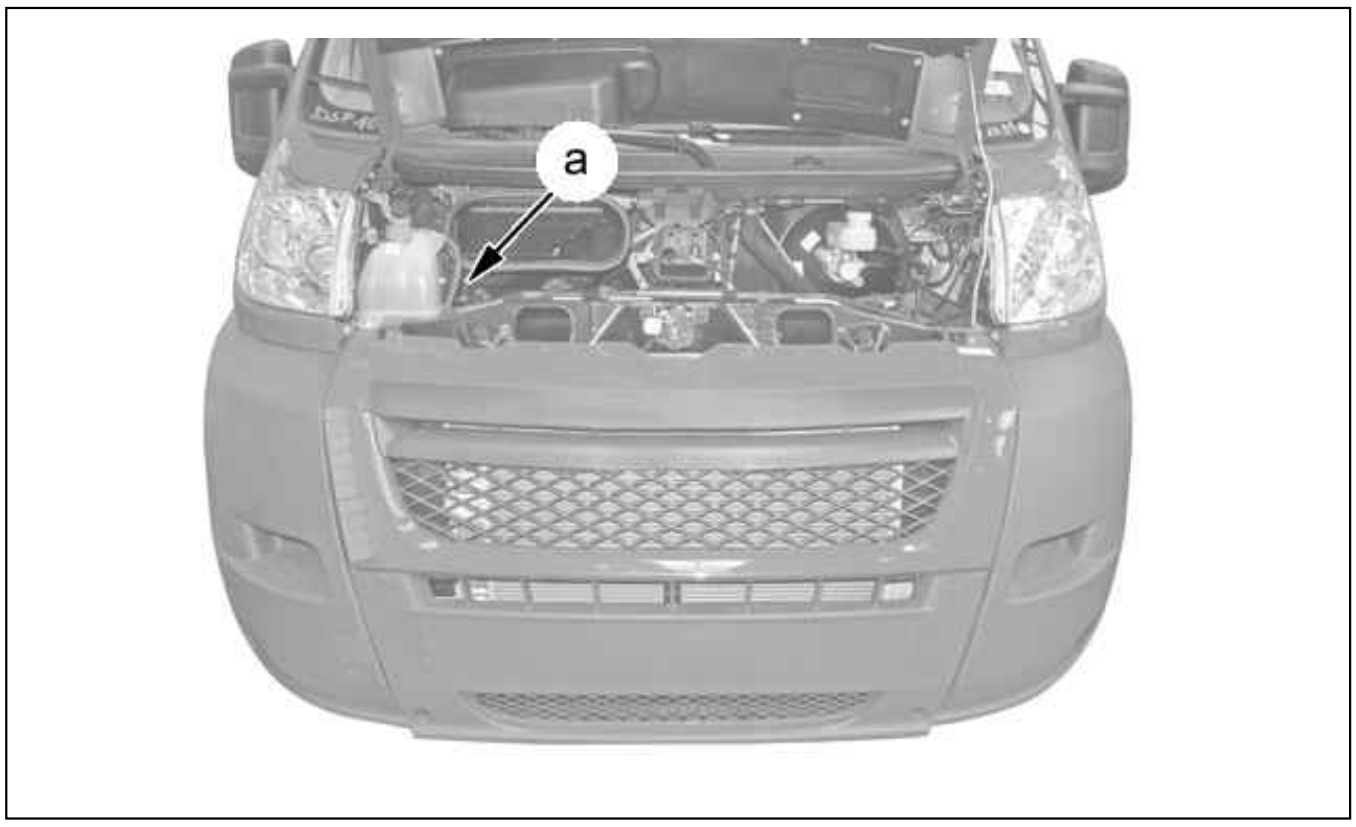

Figure : B1HG36DD

The camshaft position sensor is located at "a" on the right-hand side of the engine (timing side).

2. Removing

Disconnect the battery.
Release : The engine style cover.

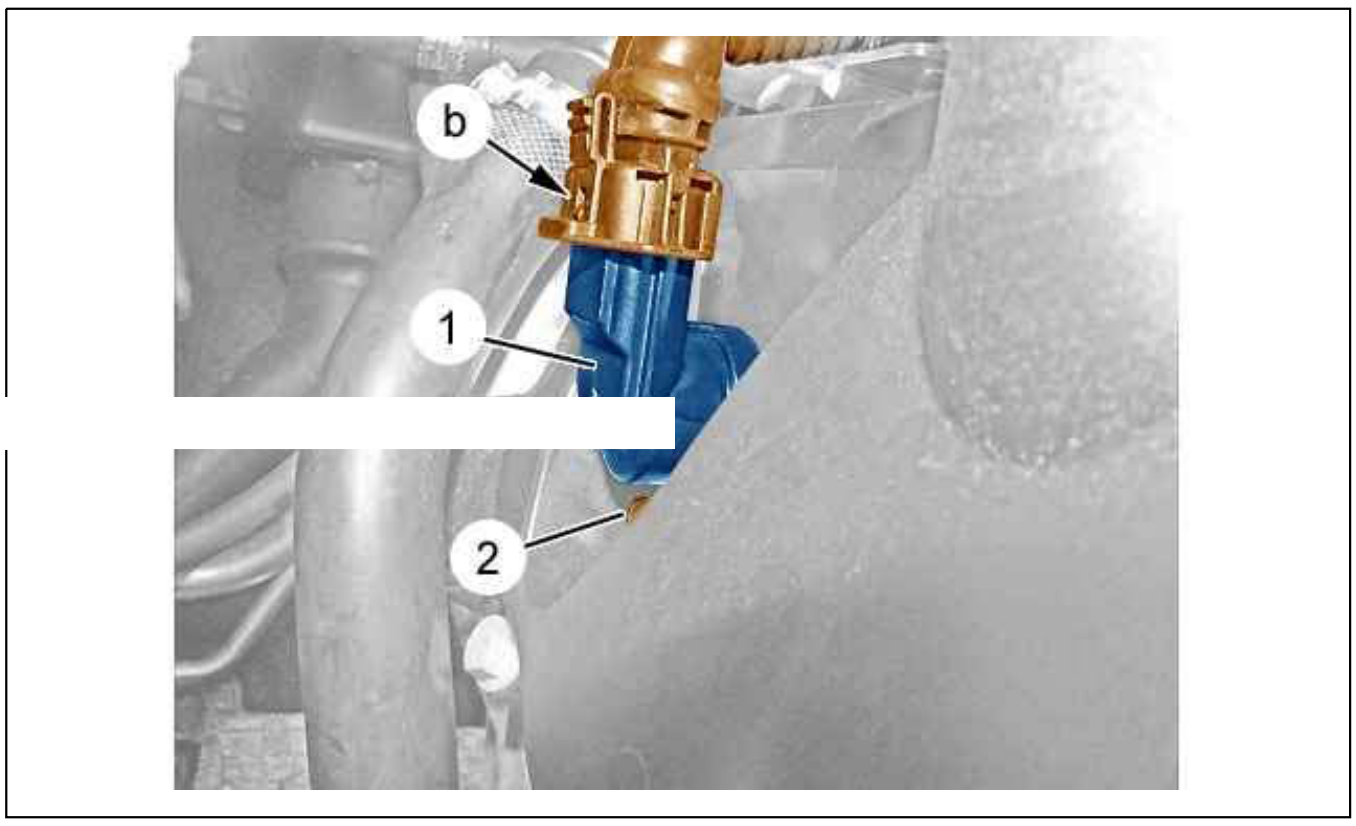

Figure : B1HG36HD

Disconnect the connector (at "b").
Remove :

- The (2) bolt
- The camshaft position sensor (1)

3. Refitting

ESSENTIAL : Adhere to the tightening torques .

Refit :

- The camshaft position sensor (1)
- The bolt (2)

Reconnect the connector at "b".
Refit the engine style cover .

CAUTION : Perform the operations to be carried out following reconnection of the battery.

Reconnect the battery.

REMOVING - REFITTING : ENGINE SPEED SENSOR

ESSENTIAL : Observe the safety and cleanliness recommendations .

1. Location

The engine speed sensor is located on the rear face of the engine, behind the alternator.

2. Removing

Put the vehicle on a hoist.
Disconnect the battery.

CAUTION : Before starting any operation close to the exhaust line, wait the latter to cool down.

Remove the under engine protection .

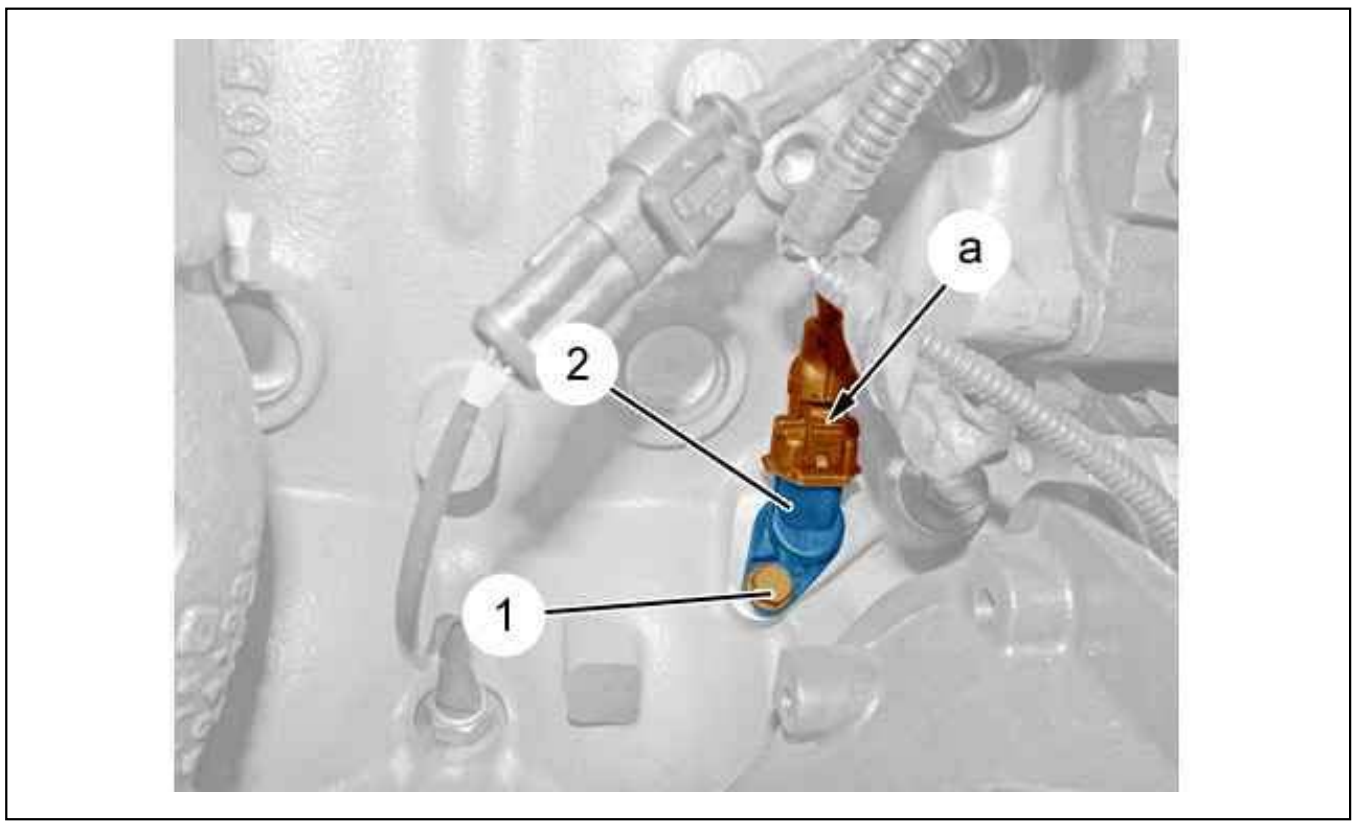

Figure : B1HG36WD

Disconnect the connector (at "a").
Remove :

- The (1) bolt
- The engine speed sensor (2)

3. Refitting

Refit :

- The engine speed sensor (2)
- The bolt (1)

Connect the connector (at "a").
Refit :

- The protective panel under the engine
- The vehicle to its wheels

CAUTION : Perform the operations to be carried out following reconnection of the battery.

Reconnect the battery.

REMOVAL - REFITTING : ENGINE ECU

ESSENTIAL : Ensure that the precautions relating to safety and cleanliness are adhered to .

CAUTION : Before adding or replacing any parts, ensure that the customer has not lost their confidential card.

1. Location

The engine ECU is situated under the bonnet, on the left-hand side close to the air filter.

2. Removal

Disconnect the battery.

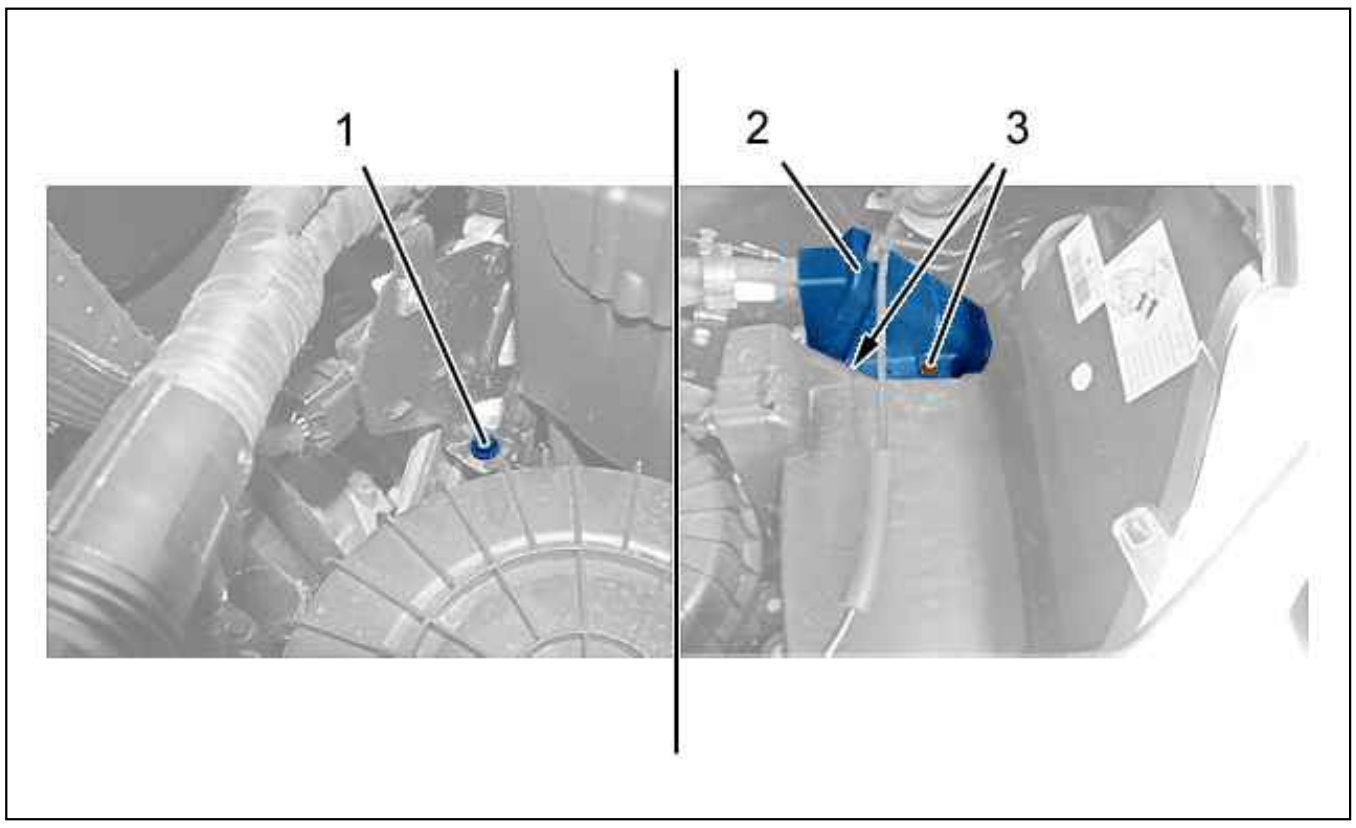

Figure : B1HG372D

Unscrew nut (1).
Take down :

- The nuts (3)
- The cover (2) of the engine management ECU unit

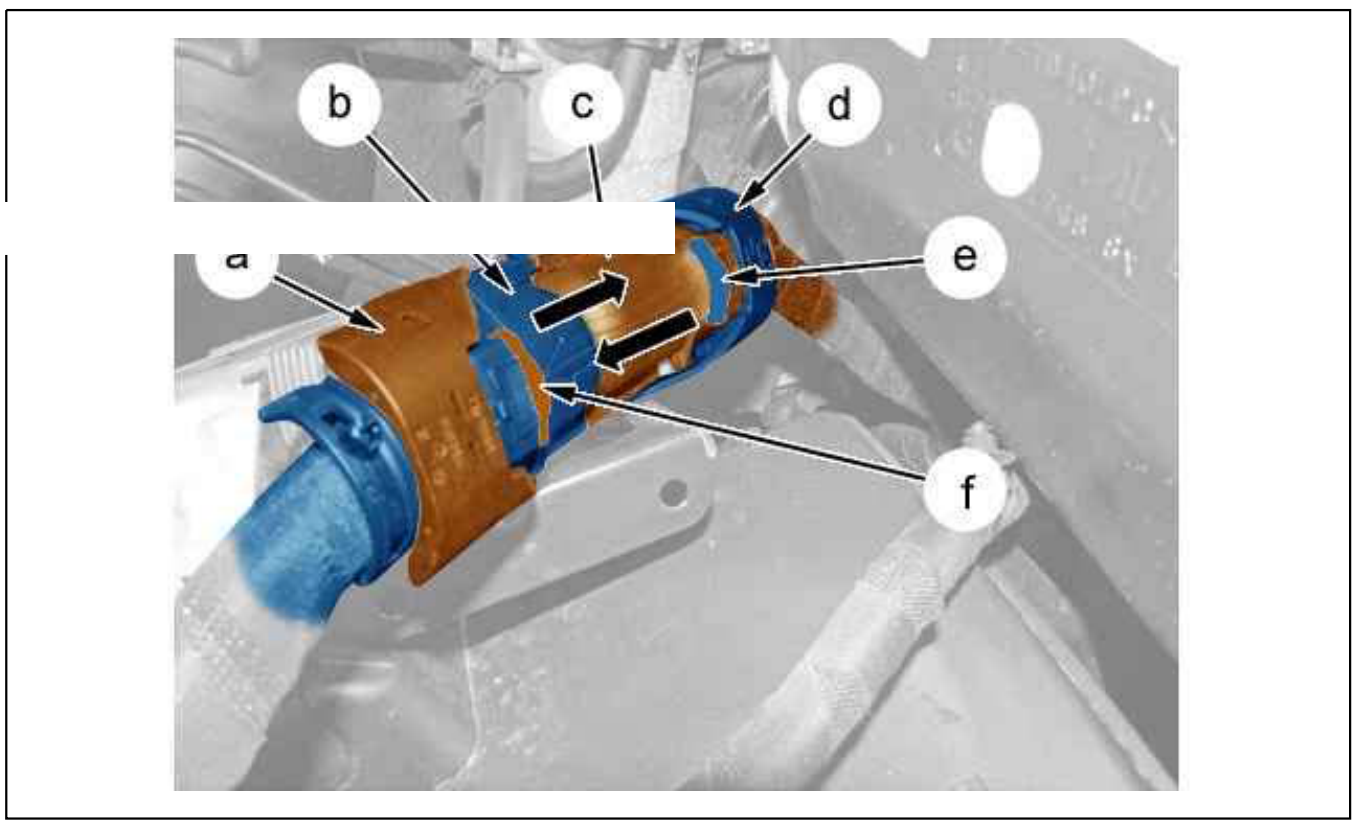

Figure : B1HG375D

Release the connectors "b", "c", by moving the latches "e", "f" in the direction of the arrows.
Lift the locking levers "a", "d".
Disconnect the connectors "b" and "c".
Lift the engine ECU assembly with its mounting.

3. Common operations



Figure : B1HG3HMD

Remove the nuts (7).
Remove the engine management ECU (6) from its mounting (5).

4. Refitting

Fit :

- The engine management ECU (6) on its support (5)
- The nuts (7)

Reposition the engine ECU assembly (6) and its mounting (5).
Connect the connectors "b" and "c".
Lock :

- The levers "a", "d"
- The connectors "b" and "c" ; Using the latches "e", "f"

5. Refitting (continued)

Fit :

- The cover (2) of the engine management ECU unit (6)
- The nuts (3)

Retighten the nut (1).

CAUTION : Perform the operations to be carried out following reconnection of the battery.

Connect the battery.

6. Operations to be carried out : After replacing the engine management ECU

low after replacing an engine ECU (6).

CAUTION : Swapping an engine ECU (6) between two vehicles results in it being impossible to start either vehicle.

When changing an engine ECU (6), it is necessary to use the diagnostic tool to run the procedure for replacing an engine ECU (6) from the "replacement parts menu.
Conditions to be met to carry out the procedure :

- Be in possession of the access code to the built-in systems interface (written on the customer’s confidential card)
- Be in possession of a new engine ECU (6)
- Use the diagnostic tool

7. Engine management ECU downloading

Updating of the software of the engine ECU (6) is by downloading (Engine ECU (6)) (ECU fitted with a flash EPROM)).

N.B. : This operation is performed using diagnostic equipment.

Perform the downloading of the engine ECU (6) (if necessary).

8. Procedures for returning under warranty

Disconnecting the engine ECU (6) automatically locks it up.

CAUTION : If returning the component under warranty, return the engine ECU (6) together with the access code.

REMOVING - REFITTING : FUEL PUMP AND GAUGE ASSEMBLY

ESSENTIAL : Observe the safety and cleanliness recommendations .

ESSENTIAL : Respect the safety and cleanliness recommendations that are specific to high pressure diesel injection (HDi) engines .

CAUTION : For cleanliness reasons, it is recommended to remove the pump-gauge assembly with a fuel level as low as possible.

1. Tooling

Equipment : Apparatus for draining fuel tanks.

tool	Reference	Designation
[0188-T]  Figure : E5AB06IT	[0188-T]	plugs kit
[1618] 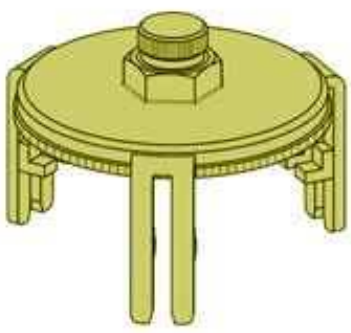 Figure : E5AB09PT	[1618]	Tool for fuel tank ring nut

2. Removing

CAUTION : After switching off the ignition, wait 15 minutes before disconnecting the battery (to guarantee that the initialisations of the various ECUs are

Disconnect the battery negative terminal.
Drain the fuel tank (if necessary) ; Using the apparatus for draining fuel tanks.



Figure : C5GP0Q2D

Remove the sound-deadening (1).

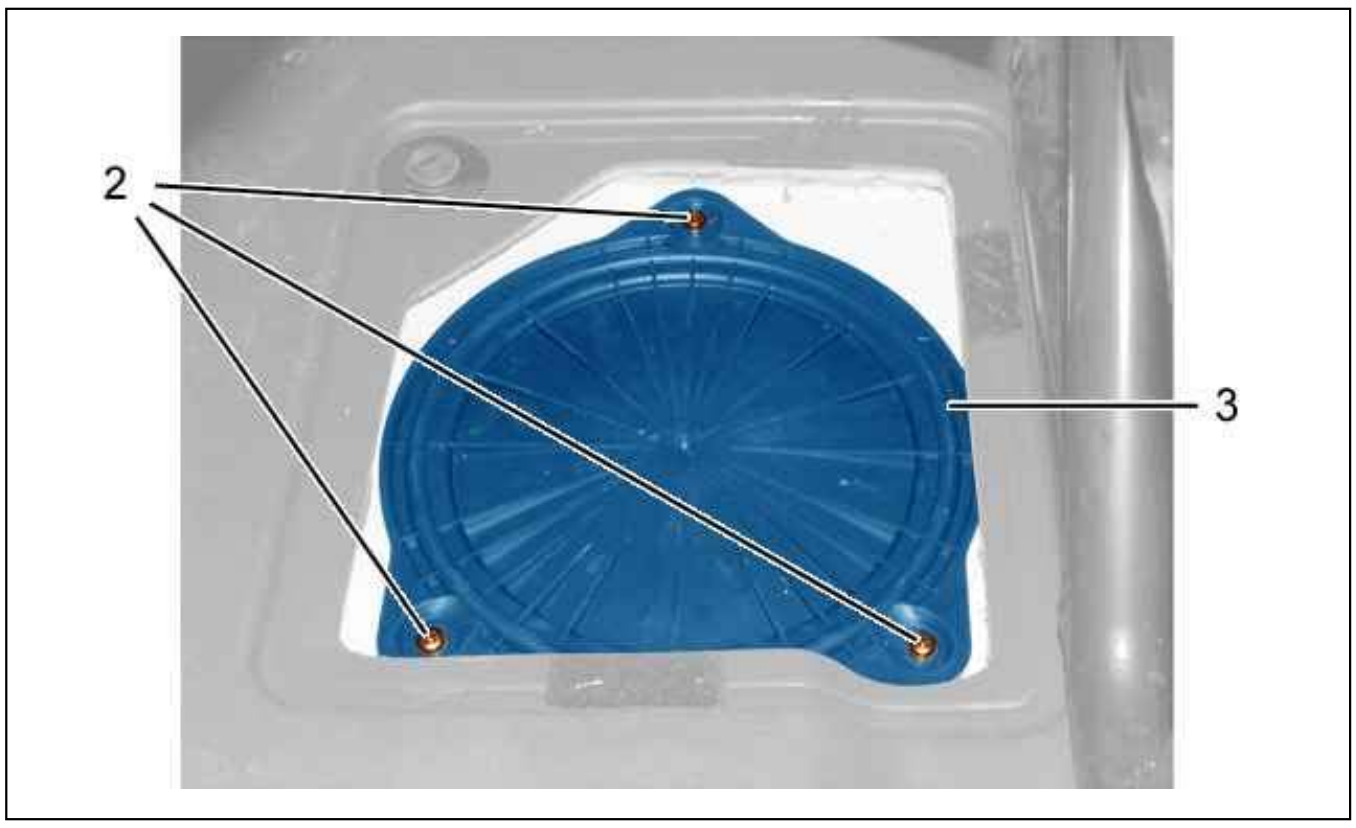

Figure : B1HP2ETD

Remove :

- The bolts (2)
- The access flap (3)

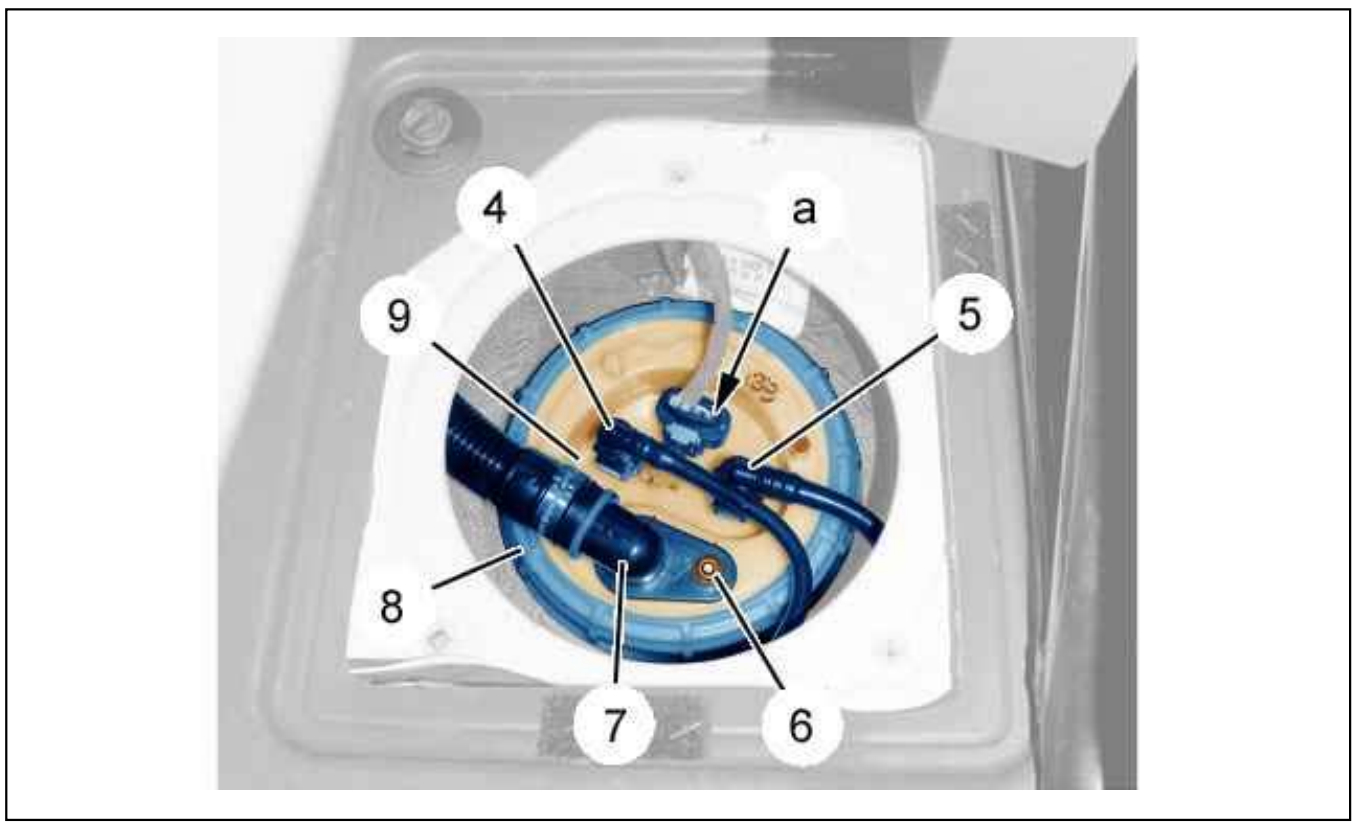

Figure : B1HP2EUD

Uncouple :

- The pipe (4)
- The pipe (5)

CAUTION : When uncoupling a pipe, plug the openings ; Using the tools [0188-T].

CAUTION : Plug the pipes on the tank unit assembly ; Using the tools [0188-T].

Remove :

- The nut (6)
- The breather pipe (7)

CAUTION : Protect the fuel gauge well periphery and fuel pump with absorbent paper.

Make a mark on the bush (8) and the fuel gauge and pump assembly (9) before slackening.

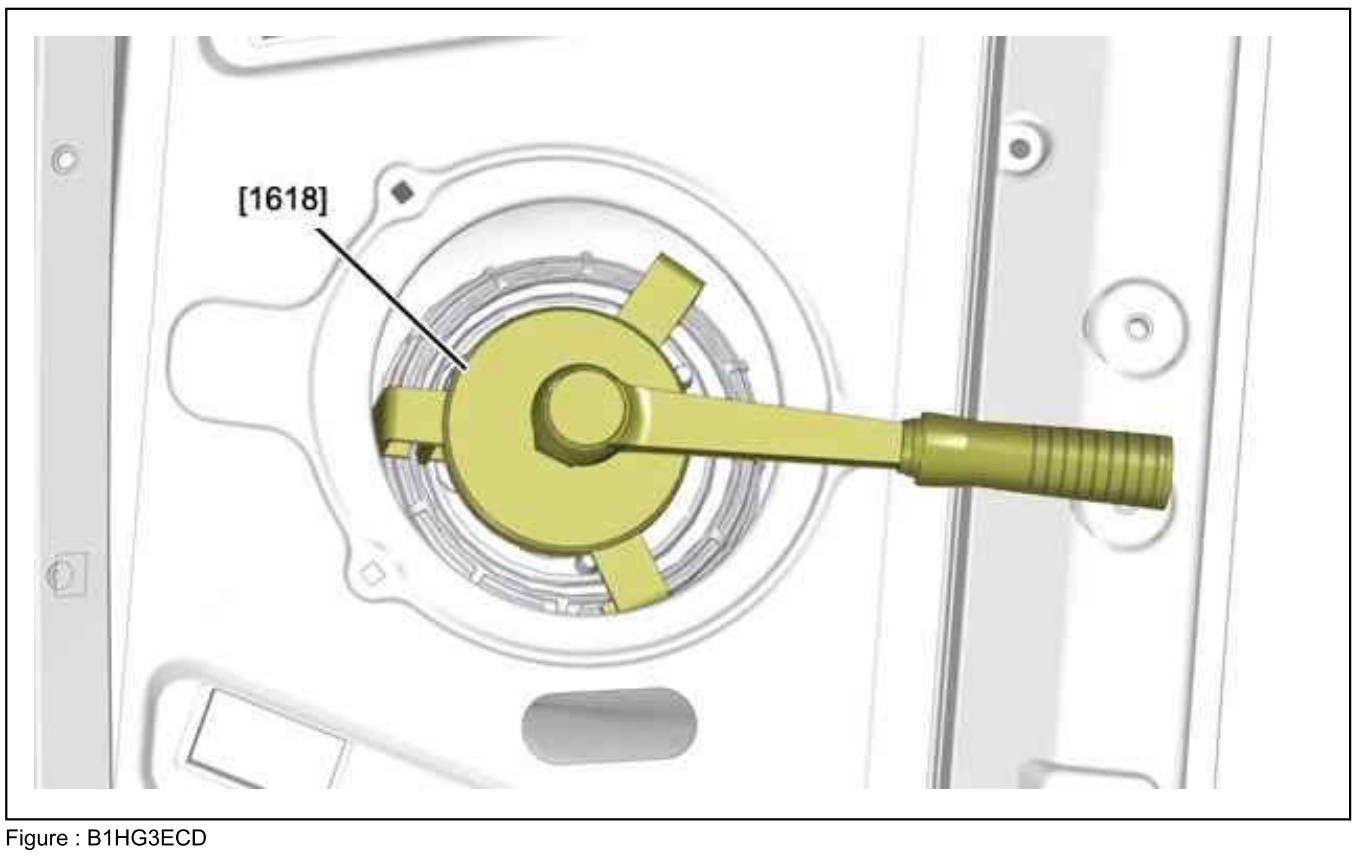

Figure : B1HG3ECD

Loosen the sleeve (8) ; Using tool [1618].
Remove the bush (8).



Figure : B1HP2EWD

Remove the fuel sender and pump (9) unit.

CAUTION : Immediately place a tray under the fuel pump and gauge assembly (9).

Remove the seal .

CAUTION : Following removal of the fuel pump and gauge assembly (9): Immediately do up the ring nut on the tank so as to prevent any deformation of the pick-up unit (Risk of fuel leak).

3. Refitting

Systematically replace the seal .

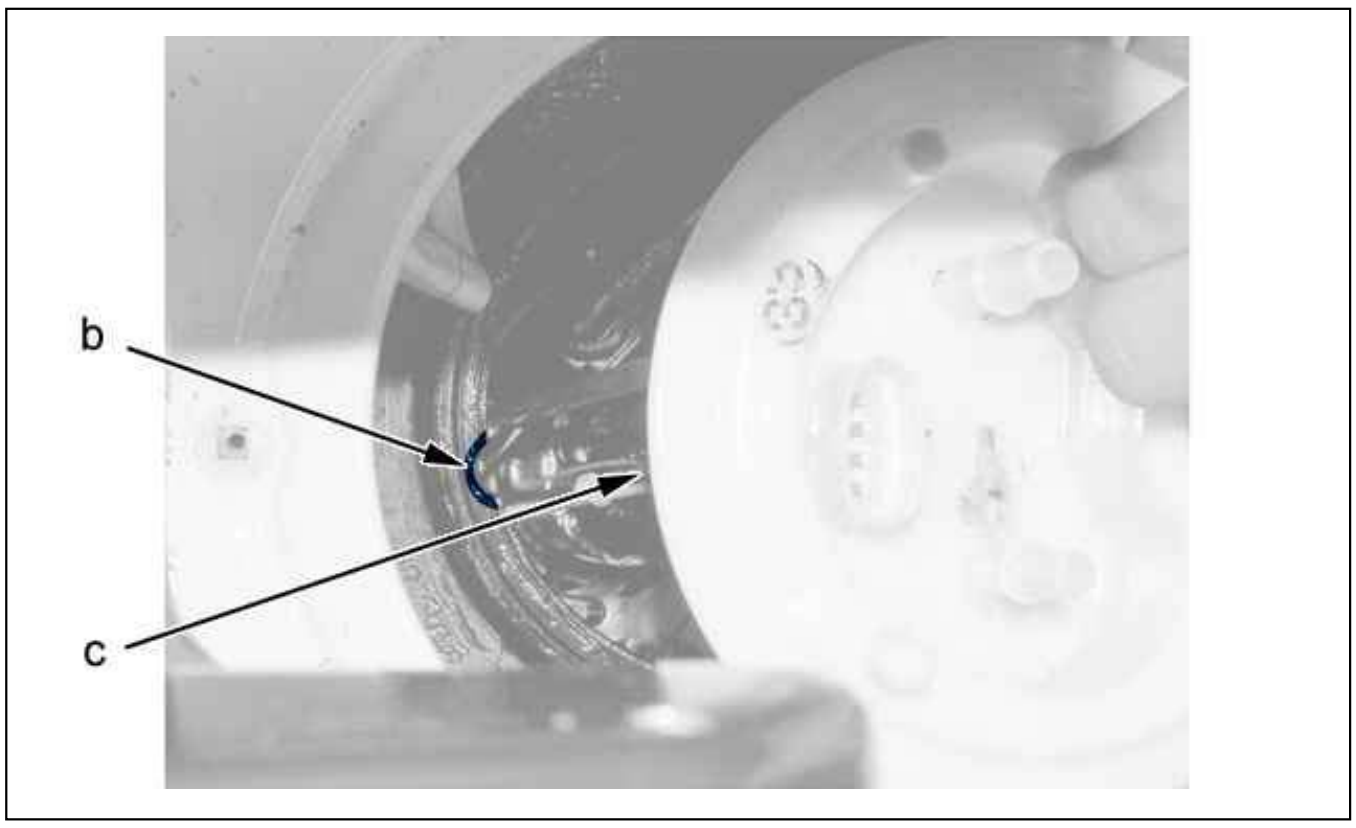

Figure : B1HP2EXD

Refit :

- The tank unit and fuel pump assembly (9) (refer to the Note)
- The bush (8)

N.B. : Align the tab "c" with the notch "b".

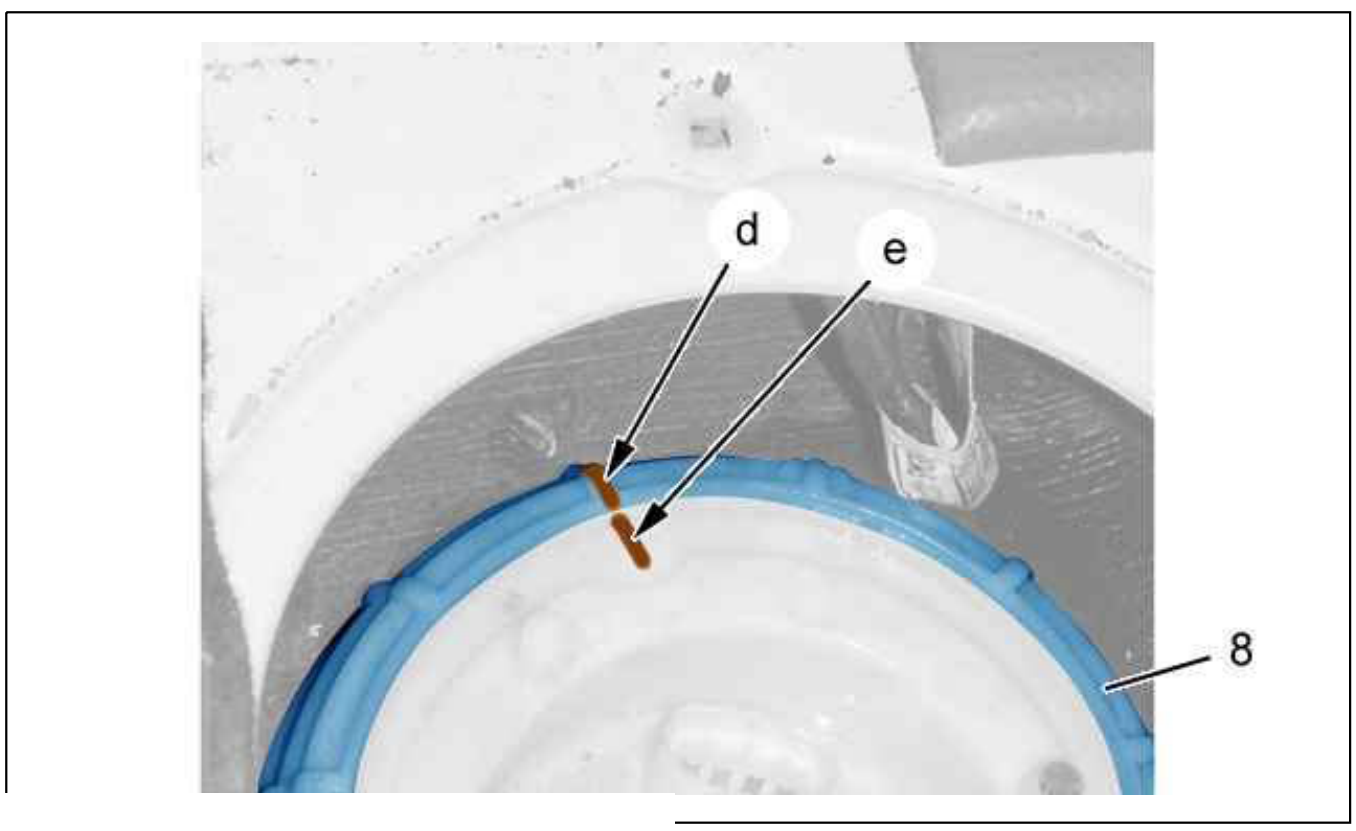

Tighten the bush (8) ; Using the tool [1618] until the marks " d " and " e " are aligned.

Clean up any splashes of fuel.

Refit :

- The breather pipe (7)
- The nut (6)

Couple up :

- The pipe (5)
- The pipe (4)

Reconnect the connector (at "a").

Refit :

- The access flap (3)
- The bolts (2)
- The soundproofing (1)

CAUTION : Perform the operations to be carried out following reconnection of the battery.

Reconnect the battery.

Switch on the ignition 10 times in succession over a period of 5 seconds, without starting the engine, this to prime the fuel circuit.

Check that the fuel gauge works.

REMOVING - REFITTING : FUEL TANK

ESSENTIAL : Observe the safety and cleanliness recommendations .

1. Tooling

Equipment :

- Apparatus for draining fuel tanks
- Component lift
- Diagnostic tool

tool	Reference	Designation
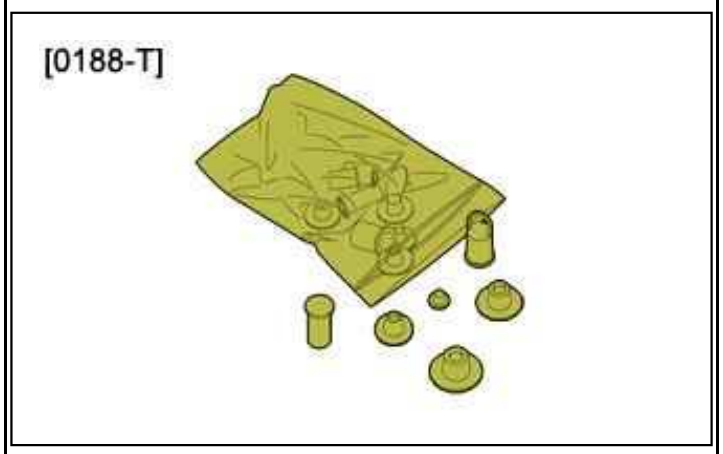 Figure : E5AB06IT	[0188-T]	plugs kit
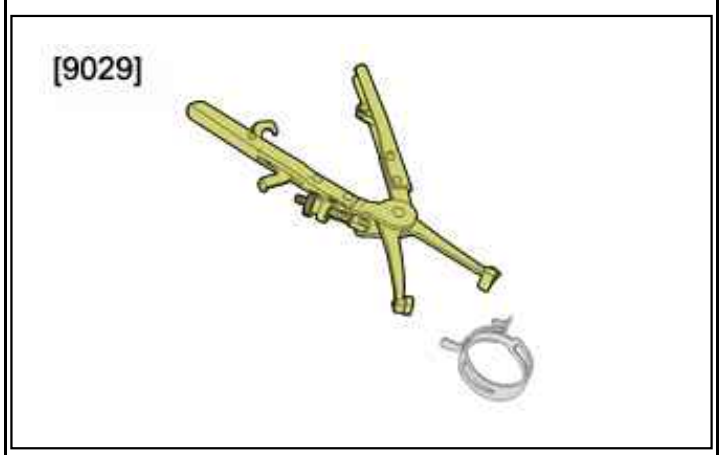 Figure : E5AB0CGT	[9029-T]	Pliers for removing elastic clips

2. Removing

Place the vehicle on a 2-post lift.

ESSENTIAL : Respect the safety and cleanliness recommendations that are specific to high pressure diesel injection (HDi) engines .

CAUTION : After switching off the ignition, wait 15 minutes before disconnecting the battery (to guarantee that the initialisations of the various ECUs are memorised).

Disconnect the battery.

Drain the fuel tank ; Using the apparatus for draining fuel tanks.



Figure : C5GP0Q0D

Remove the sound-deadening (1).

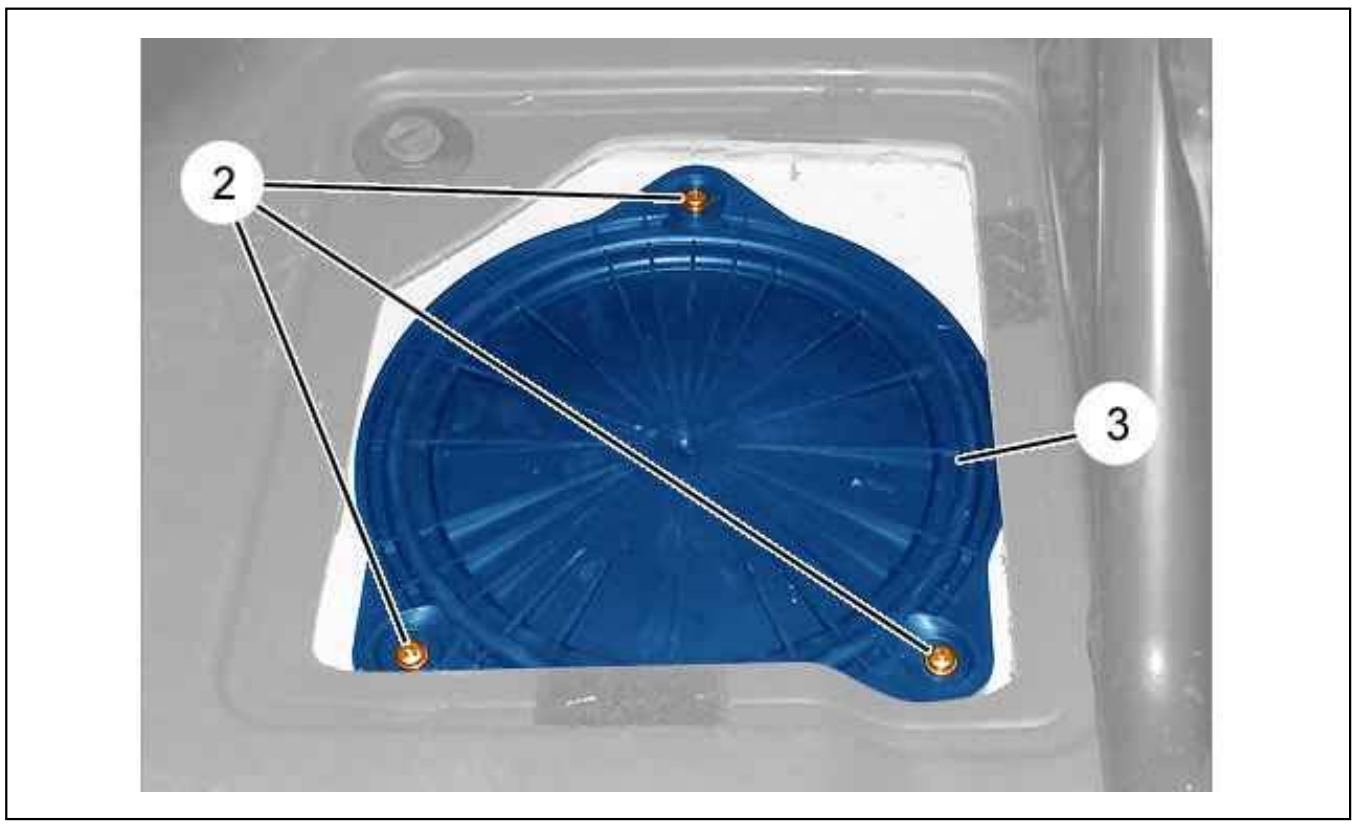

Figure : C5GP0Q1D

Remove :

- The bolts (2)
- The access flap (3)

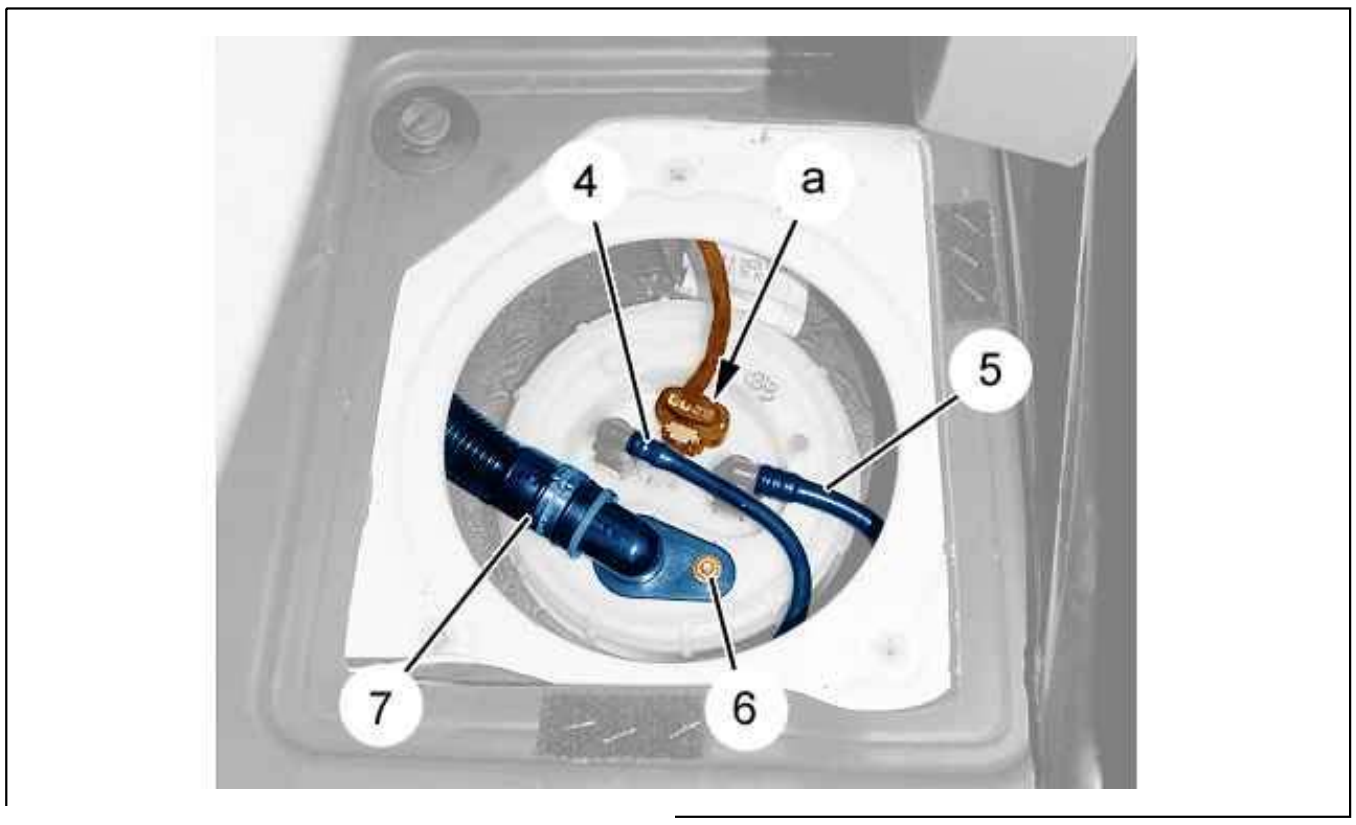

Disconnect the connector (at "a").
Uncouple :

- The pipe (4)
- The pipe (5)

CAUTION : Plug the openings when you uncouple a duct ; Using tool [0188-T].

CAUTION : Plug the pipes on the tank unit assembly ; Using tool [0188-T].

Remove the nut (6).
Uncouple the venting pipe (7) from the fuel tank.

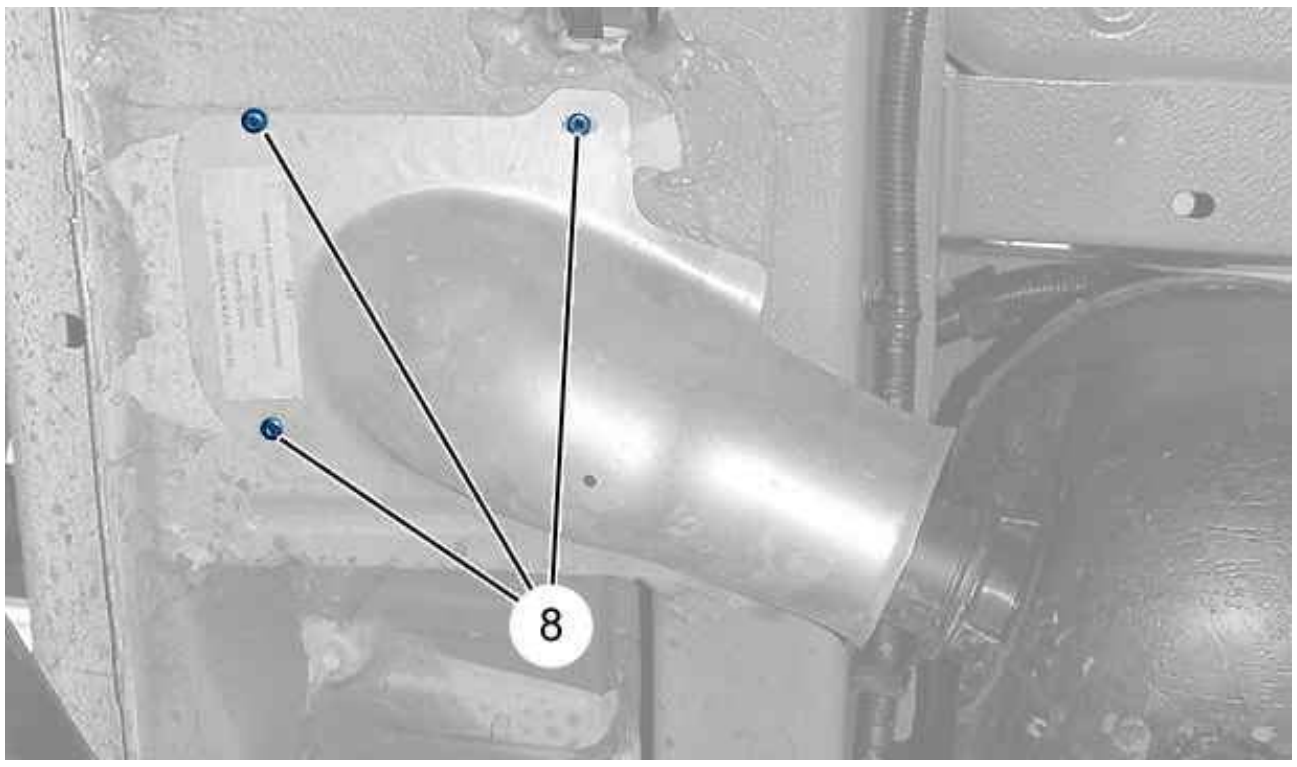

Figure : B1HP2DYD

Drill the heads of the 3 rivets (8).

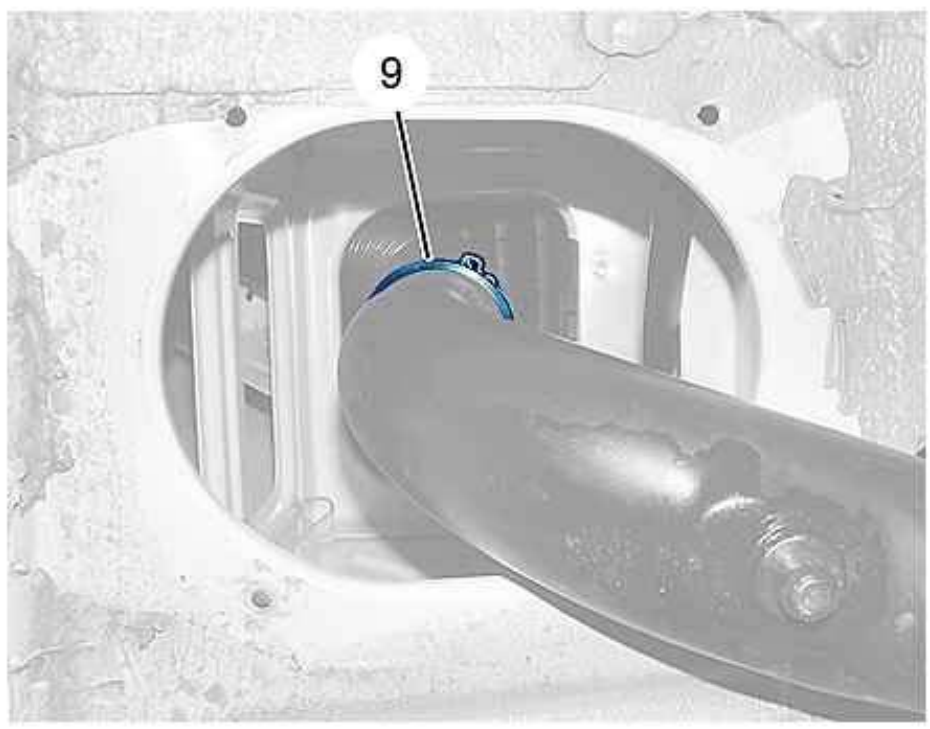

Figure : B1HP2DZD

Remove the clip (9) from the fuel tank filler neck ; Using tool [9029-T].

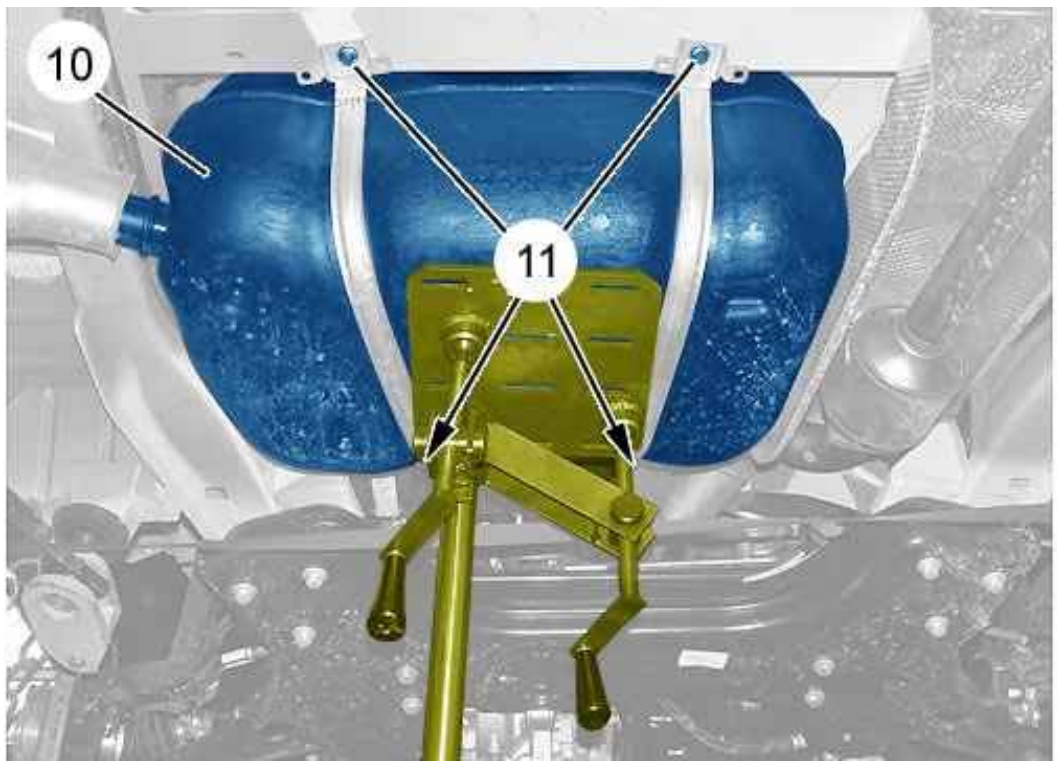

Figure : B1HP2E0D

Position a component lift under the fuel tank (10).

Remove :

- The bolts (11)
- The fuel tank (10)

3. Refitting

CAUTION : Adhere to the tightening torques .

Refit :
- The fuel tank (10)
- The bolts (11)

Remove the unit lifting jack.
Refit the clip (9) on the fuel tank filler neck (10) ; Using tool [9029-T].
Refit new rivets (8).
Couple the venting pipe (7) on the fuel tank (10).
Tighten the nut (6).
Remove the tool [0188-T].
Couple up :
- The pipe (5)
- The pipe (4)

Connect the connector (at "a").
Refit :
- The access flap (3)
- The bolts (2)
- The soundproofing (1)

Fill the fuel tank (10) ; Using the apparatus for draining fuel tanks.

CAUTION : Perform the operations to be carried out following reconnection of the battery.

Reconnect the battery.

4. Priming of the EURO 4 fuel circuit

CAUTION : Prime the fuel circuit by actioning the ignition key several times to the ignition+ position.

Check that the fuel gauge works.
Return the vehicle to its wheels.

5. Priming of the EURO 5 fuel circuit

CAUTION : It is necessary to perform the "replacement of the metering pump" procedure in the RP (Replacement Parts) menu ; Using the diagnostic tool.

Prime the vaporiser circuit ; Using the diagnostic tool.
Switch on the ignition 10 times in succession over a period of 5 seconds, without starting the engine, this to prime the fuel circuit.
Check that the fuel gauge works.
Return the vehicle to its wheels.

REMOVING - REFITTING : FUEL FILTER

ESSENTIAL : Observe the safety and cleanliness recommendations .

1. Tooling

Equipment :

- Cleaner for diesel fuel filter bowls (index "N3")
- Brush
- Cleaning tray

tool	Reference	Designation
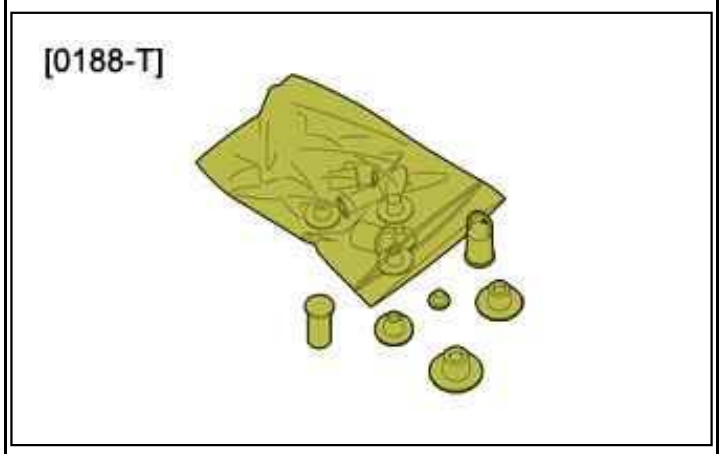 Figure : E5AB06IT	[0188-T]	plugs kit
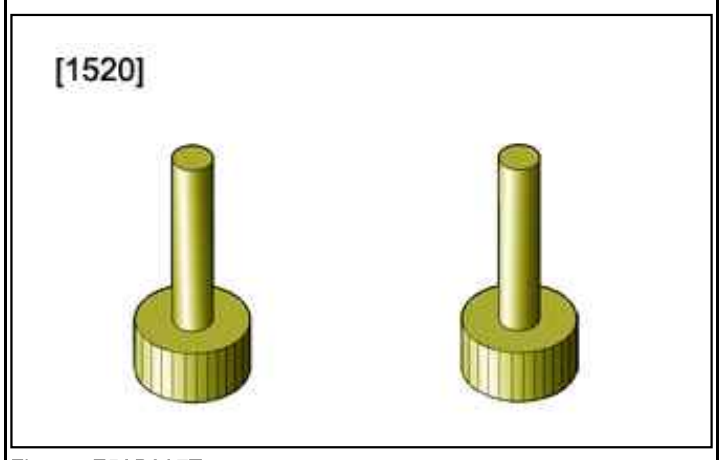 Figure : E5AB0A7T	[1520]	Blanking cover for snap-on unions
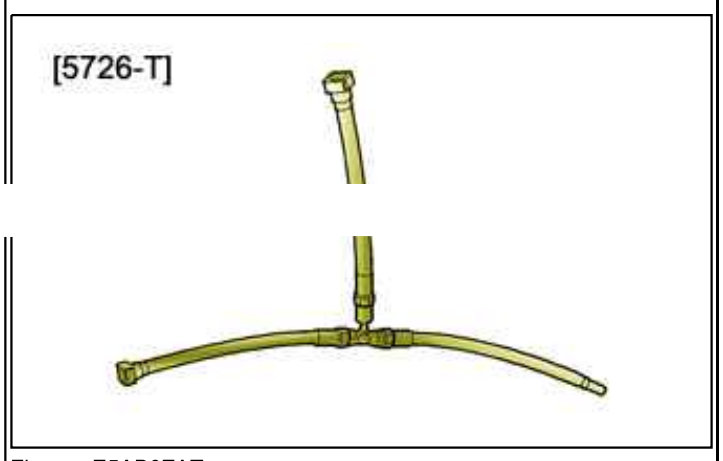 Figure : E5AB0ZAT	[5726-T]	Connector for diesel filter draining
 Figure : E5AB0ZBT	[1604-M]	Adaptor for union for bleeding the diesel filter

2. Removing

Disconnect the battery.
Remove the front protection under the engine.

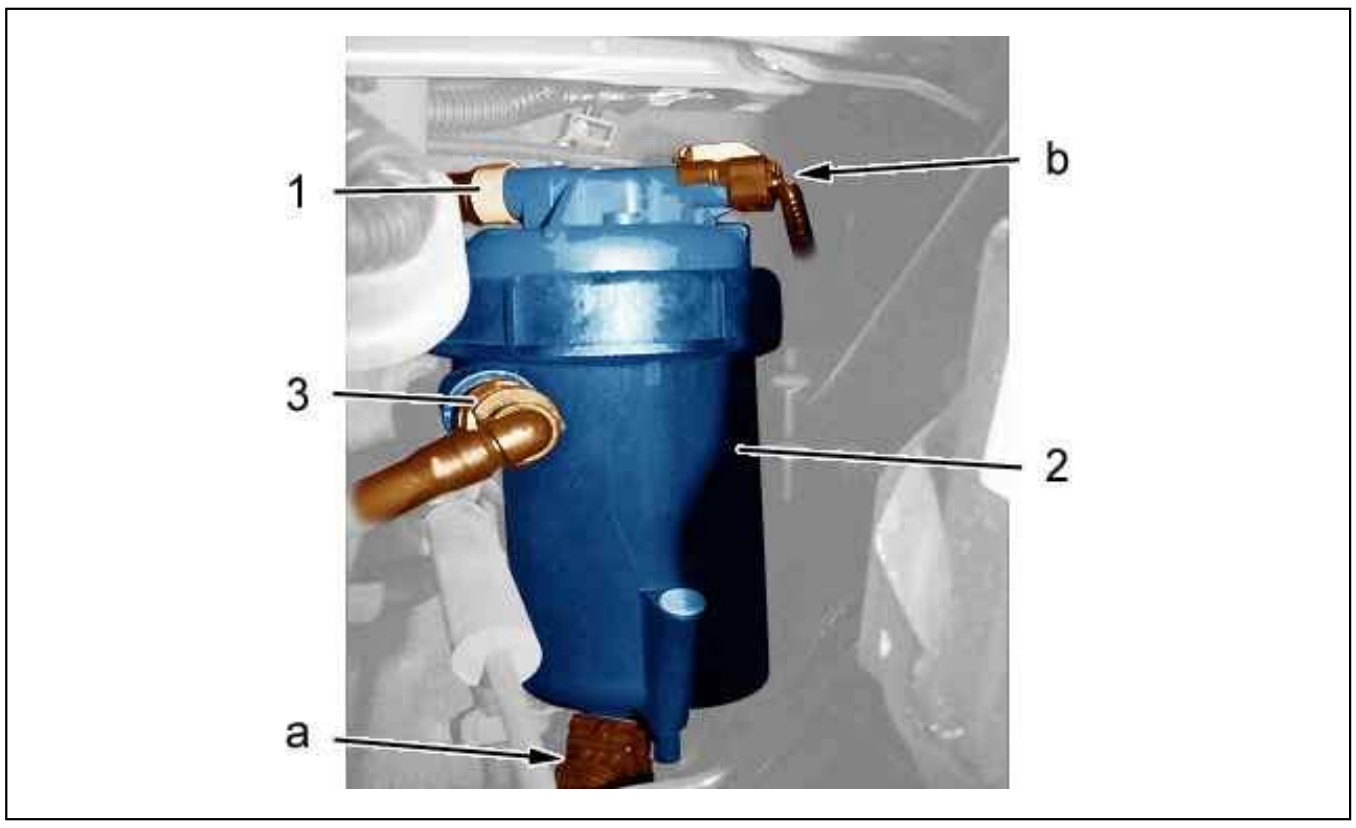

Figure : B1HG2R8D

Pour the diesel filter bowls cleaning product index "N3" into the cleaning tray.
Clean the unions of the pipes (1), (3) on the fuel filter (2) ; Using a paint brush .

CAUTION : Plug the orifices when uncoupling a pipe ; Using tool [0188-T].

Uncouple - Blank off the tubes (1), (3).

CAUTION : Plug the ducts on the fuel filter (2) ; Using the tools [1520].

Unplug :

- The connector (at "a")
- The connector (at "b") (according to equipment)

Unclip the fuel filter assembly (2) (towards the top).
Remove the fuel filter (2).

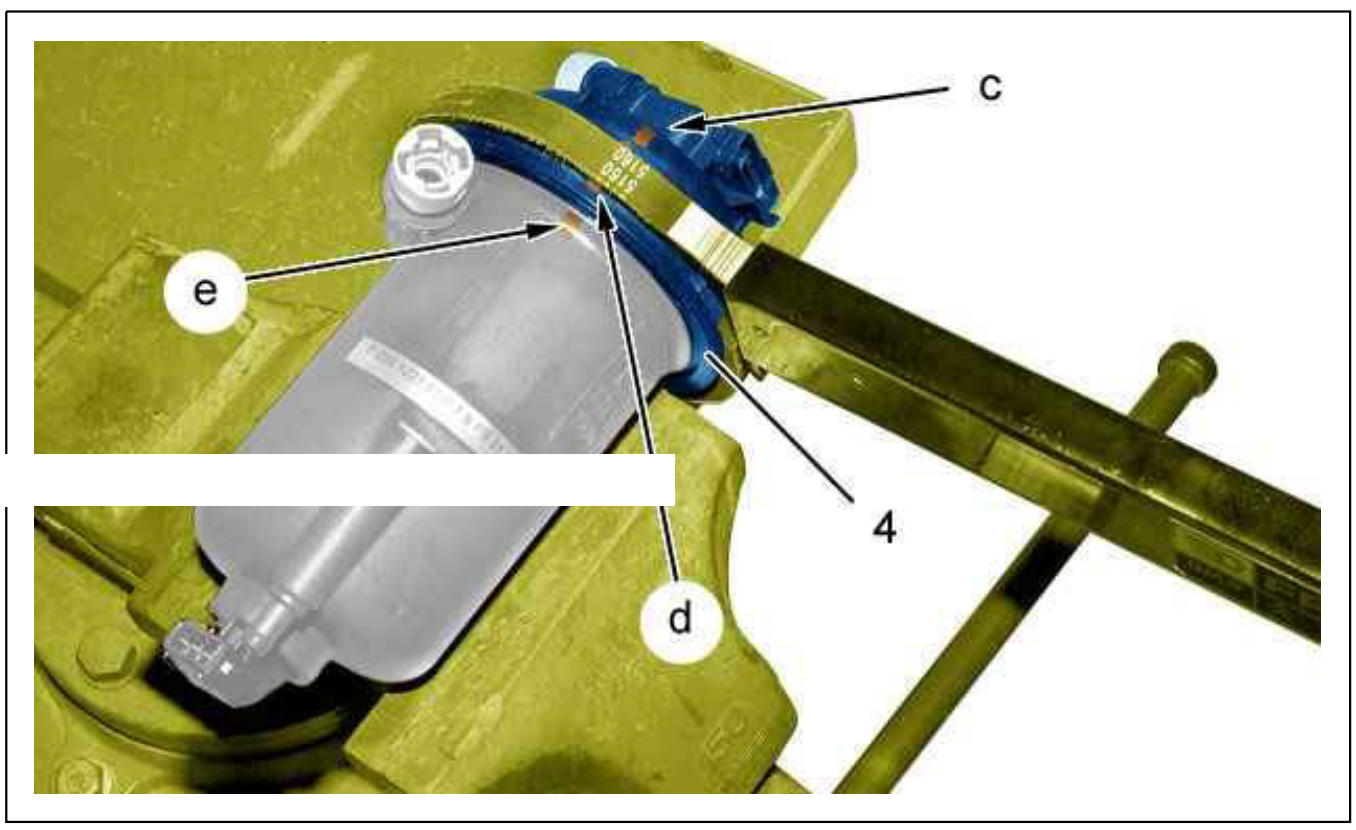

Figure : B1HG2R9D

Mark a reference (at "d") on the ring (4) between the references (At "c" and "e") .
Loosen the sleeve (4) ; Using a pipe wrench (on a workbench).
Remove the filter element.

3. Cleaning the fuel filter

Pour the diesel filter bowls cleaning product index "N3" into the cleaning tray.
Clean the fuel filter (2) ; Using a paint brush .
Drain the fuel filter (2).
Dry and wipe the fuel filter (2) ; Using a lint-free cloth (available from Replacement Parts).

4. Refitting

CAUTION : Open the sachet containing the new filter element just before refitting.

Fit the new filter element .
Tighten the sleeve (4) until the marks " c ", " d " and " e " are aligned ; Using a pipe wrench.
Refit : The fuel filter (2).
Connect :

- The connector (at "a")
- The connector (at "b") (according to equipment)

Remove :

- The tool [0188-T] from pipes (1) and (3)
- Tool [1520] from the pipes of the fuel filter (2)

Connect the pipe (1).

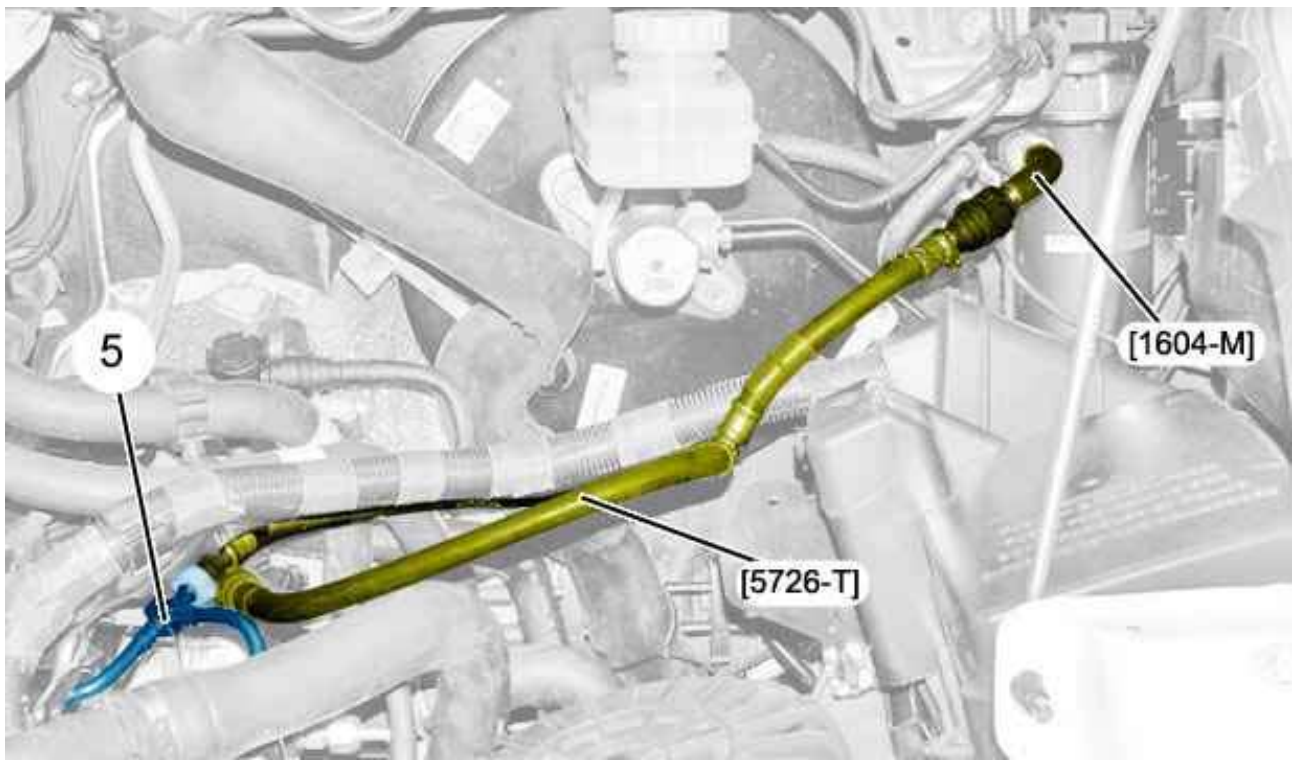

Figure : B1HG2RAD

Connect the male union (Ø 10 mm) of the tool [1604-M] in place of the pipe (3).
Uncouple the fuel return pipe (5).
Insert the unions (Ø 8 mm) of tool [5726-T] instead of the fuel return pipe (5).
Couple together the unions (10 mm diameter) of the tools [5726-T] and [1604-M].

CAUTION : Perform the operations to be carried out following reconnection of the battery.

Reconnect the battery.
Switch on the ignition 10 times in succession without starting to prime the fuel circuit.
Remove tools [5726-T] and [1604-M].
Couple up :

- The tube (3)
- The fuel return pipe (5)

5. Bleed procedure / Checking for leaks

Start the engine.
Check the absence of leaks.

CAUTION : Declutch and accelerate fully at the same time for 3 minutes.

N.B. : The engine speed is limited to 2500 rpm in clutch anti-centrifugation strategy and the fuel pressure is regulated.

Check the absence of leaks.
Carry out a road test.
Check the absence of leaks.

6. Bleed during service (presence of water)



Figure : B1HG2RBD

Place a draining tray under the engine.
Couple a translucent pipe reaching as far as the drain tray (at "f") (if necessary).
Open the bleed screw (6).
Switch on the ignition 10 times in succession over a period of 5 seconds, without starting the engine, this to prime the fuel circuit.
Close the bleed screw (6).
Uncouple and remove the translucent pipe (If necessary).
Refit the under-engine protection .

REMOVING - REFITTING : TURBOCHARGER AIR COOLER

ESSENTIAL : Observe the safety and cleanliness recommendations.

1. Tooling

Equipment : Drain tray.

tool	Reference	Designation
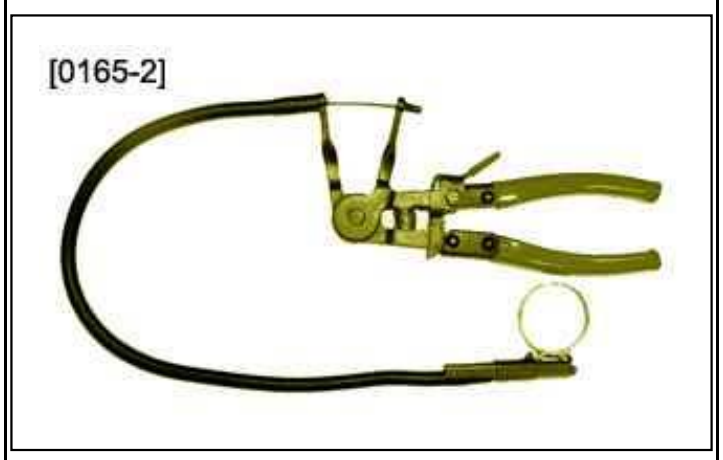 Figure : E5AI007T	[0165-2]	Cable pliers for flexible clips

2. Removing

Place the vehicle on a 2-post lift.

Remove :

- The grille (see the relevant operation)
- The central front bumper

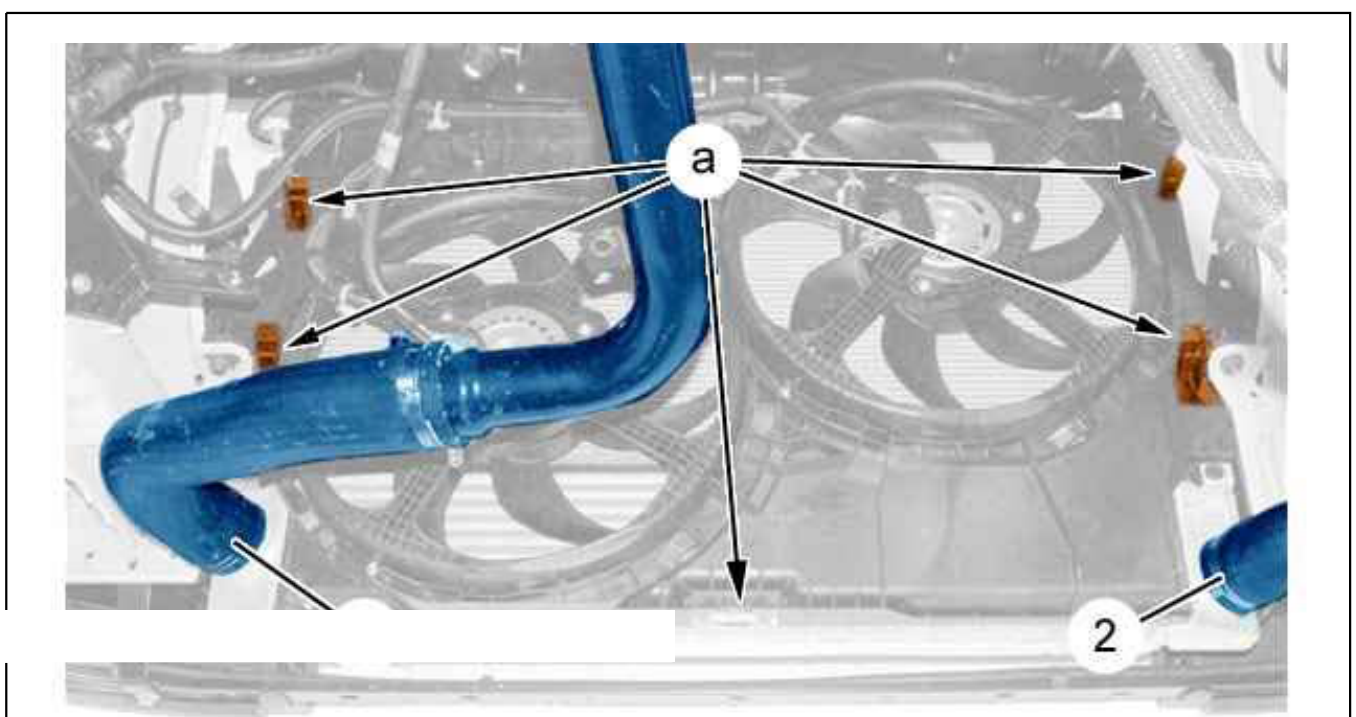

Figure : B1GP0JSD

N.B. : Place a draining tray under the engine.

Uncouple :

- The ducts (1), (2) from the turbocharger air cooler ; Using tool [0165-2]
- The radiators assembly (at "a")

Pull the radiators assembly upwards.

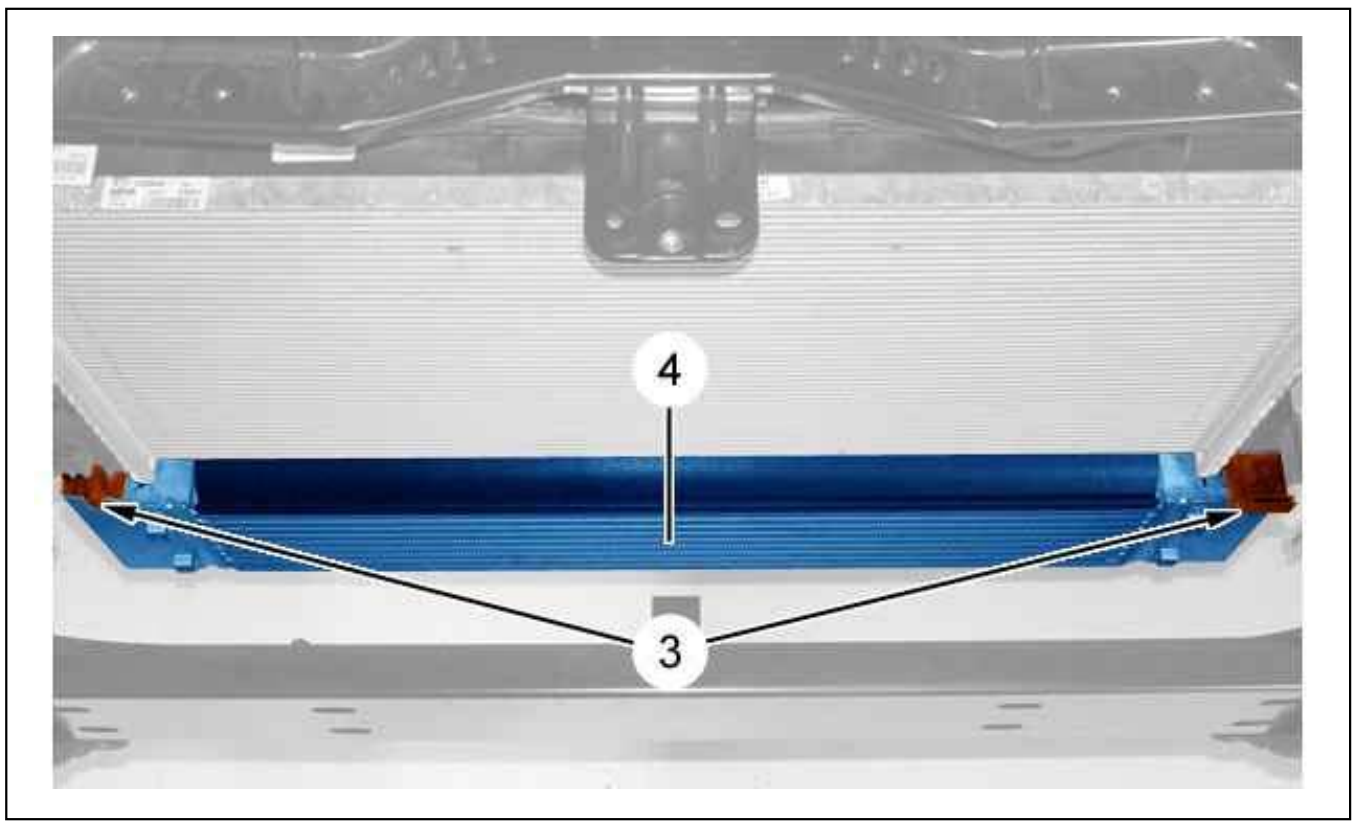

Figure : B1GP0JTD

Remove :

- The screws and the centring pins (3) from the turbocharger air cooler (4)
- The turbocharging air cooler (4)

3. Refitting

Refit :

- The turbocharging air cooler (4)
- The screws and the centring pins (3) from the turbocharger air cooler (4)
- The radiators assembly

Couple up :

- The radiators assembly (at "a")
- The ducts (1), (2) from the turbocharger air cooler (4) ; Using tool [0165-2]

N.B. : Replace all of the removed spring clips (if necessary).

Refit :

- The central front bumper
- The grille (see the relevant operation)
- The vehicle to its wheels

REMOVING - REFITTING : AIR INLET MANIFOLD

ESSENTIAL : Observe the safety and cleanliness recommendations.

1. Recommended tools

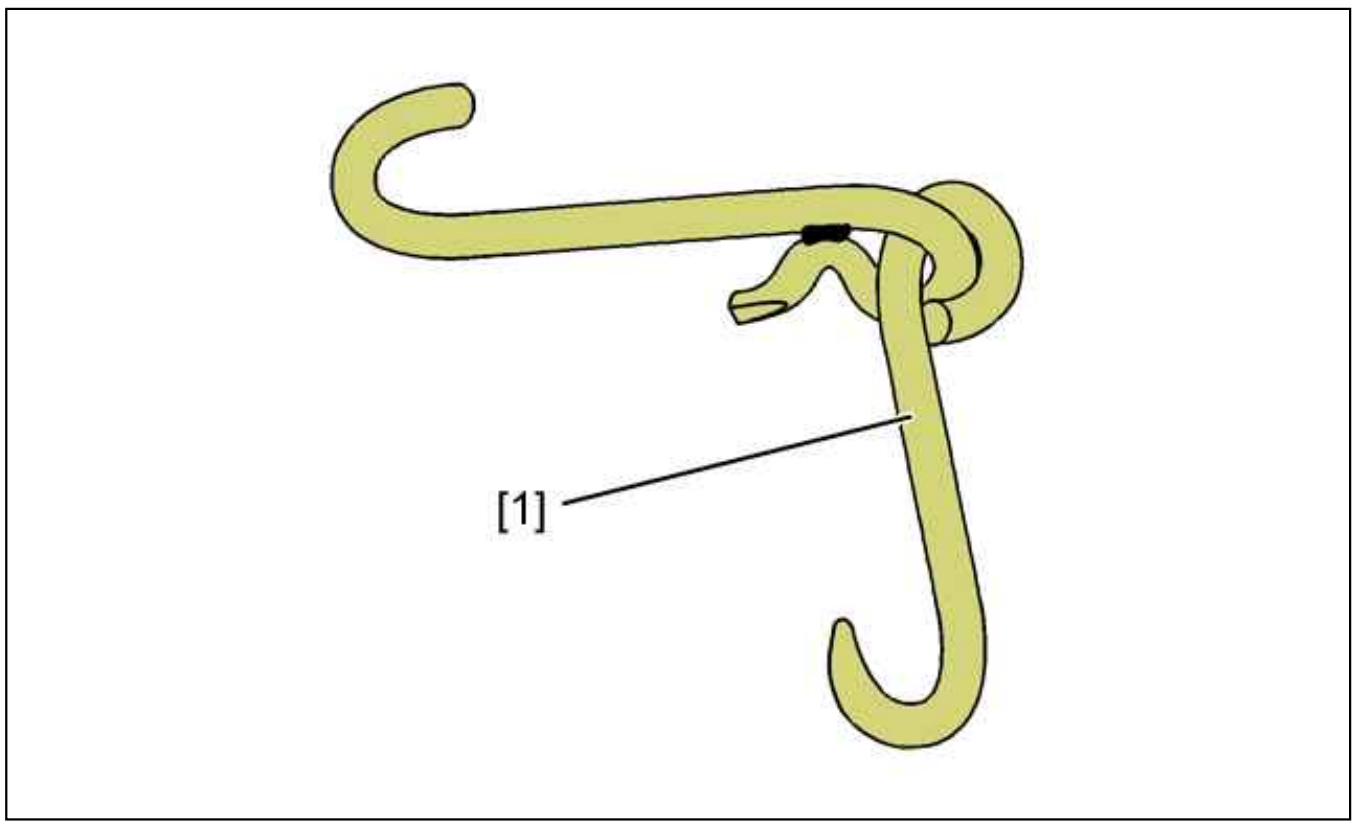

Figure : E5AP32KD

Reference	Designation	Reference	Reference
[1]	Bonnet retaining hook	5706-T	(-).1331

2. Removing

CAUTION : Respect the safety and cleanliness recommendations that are specific to high pressure diesel injection (HDi) engines.

CAUTION : After switching off the ignition: wait 15 minutes before disconnecting the battery, to ensure that the initialisations of the various ECUs are memorised.

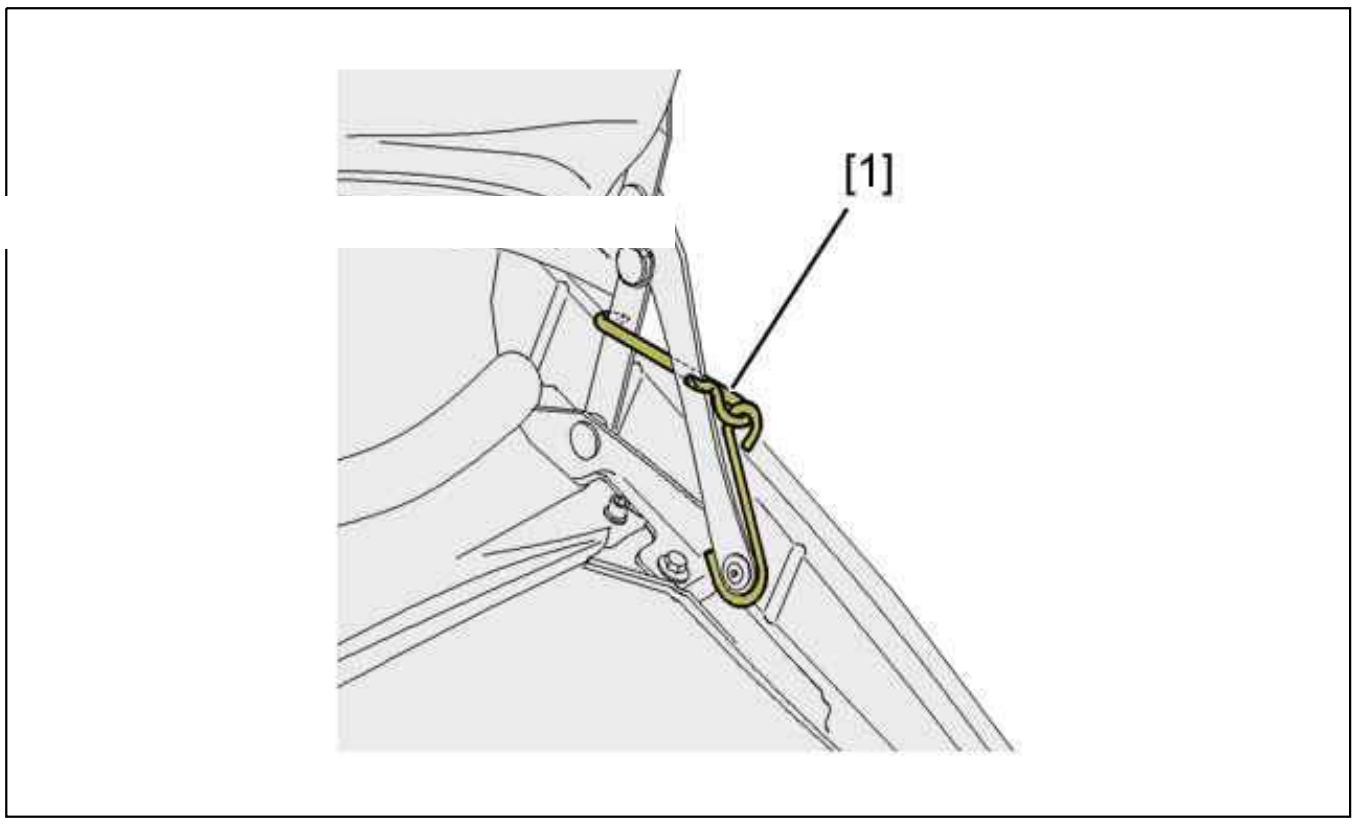

Figure : B1BPRWYD

Put the bonnet in the vertical position ; Using tool [1].
Remove :

- The central bumper (upper and lower) (see the relevant operation)
- The bonnet opening control (see the relevant operation)

Disconnect the battery.

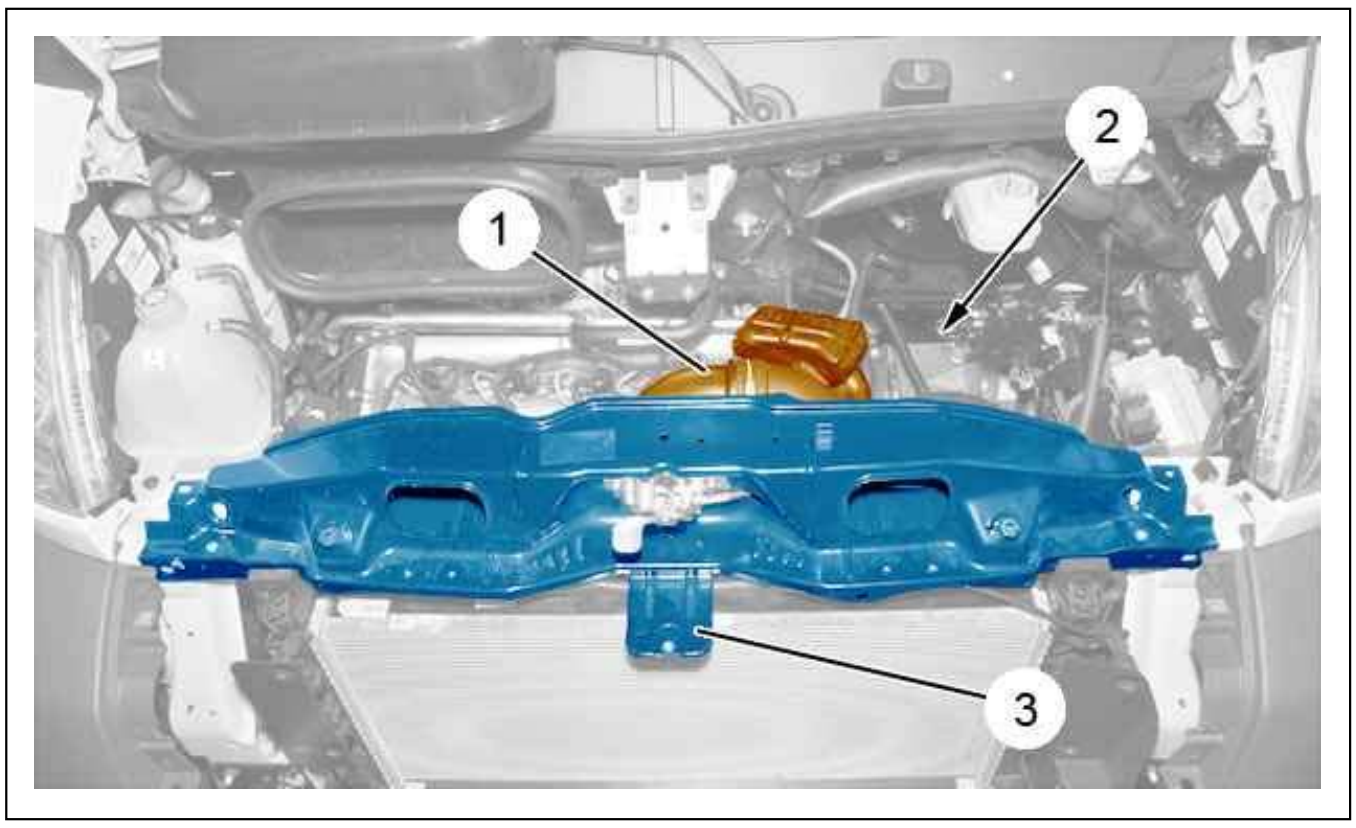

Figure : B1BPSG8D

Remove :

- The front panel upper crossmember (3) (see the relevant operation)
- The air filter (2) (complete)
- The air duct (1)

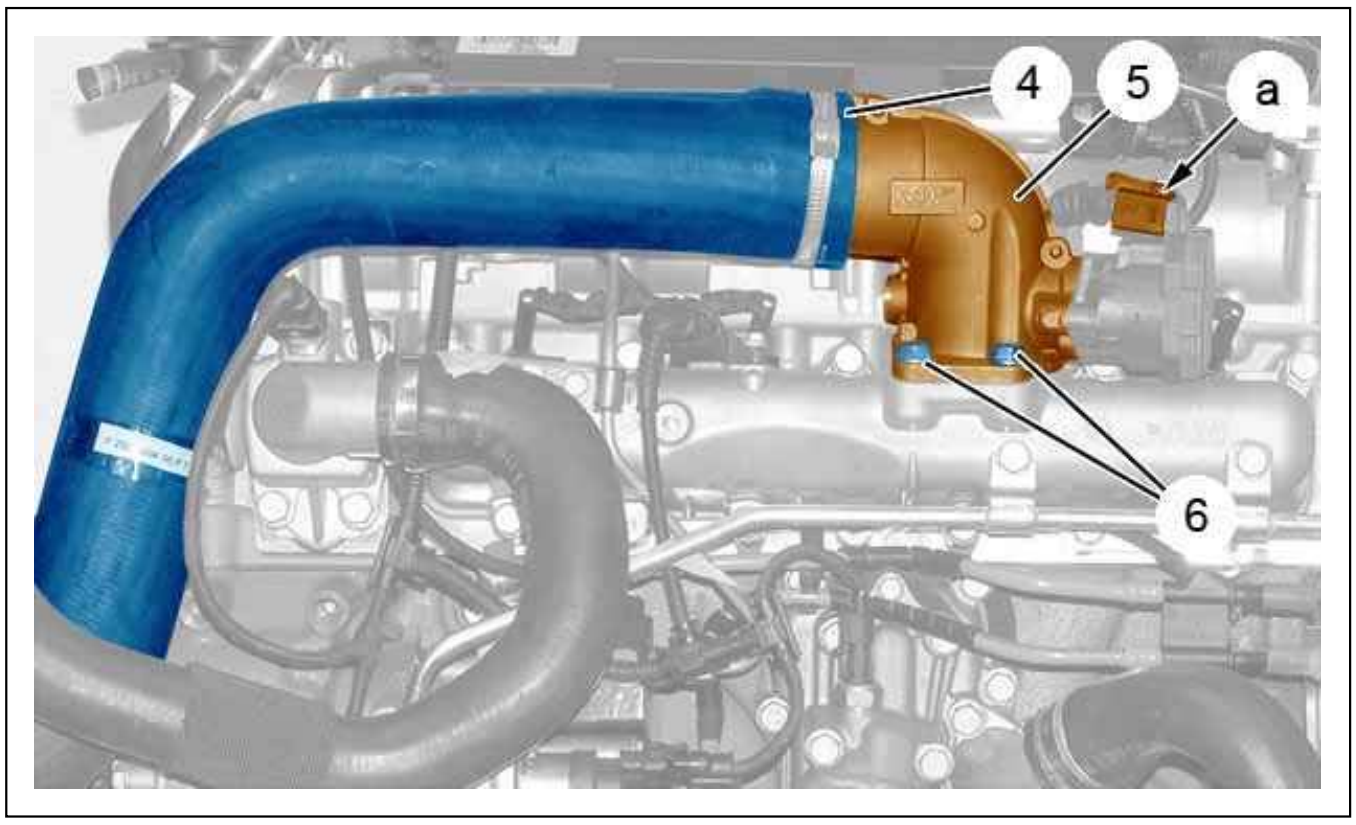

Figure : B1BPSC0D

Disconnect the connector (as a).
Move aside the electrical harness .
Uncouple the air pipe (4).

Remove :

- The 4 bolts (6)
- The air inlet neck (5)

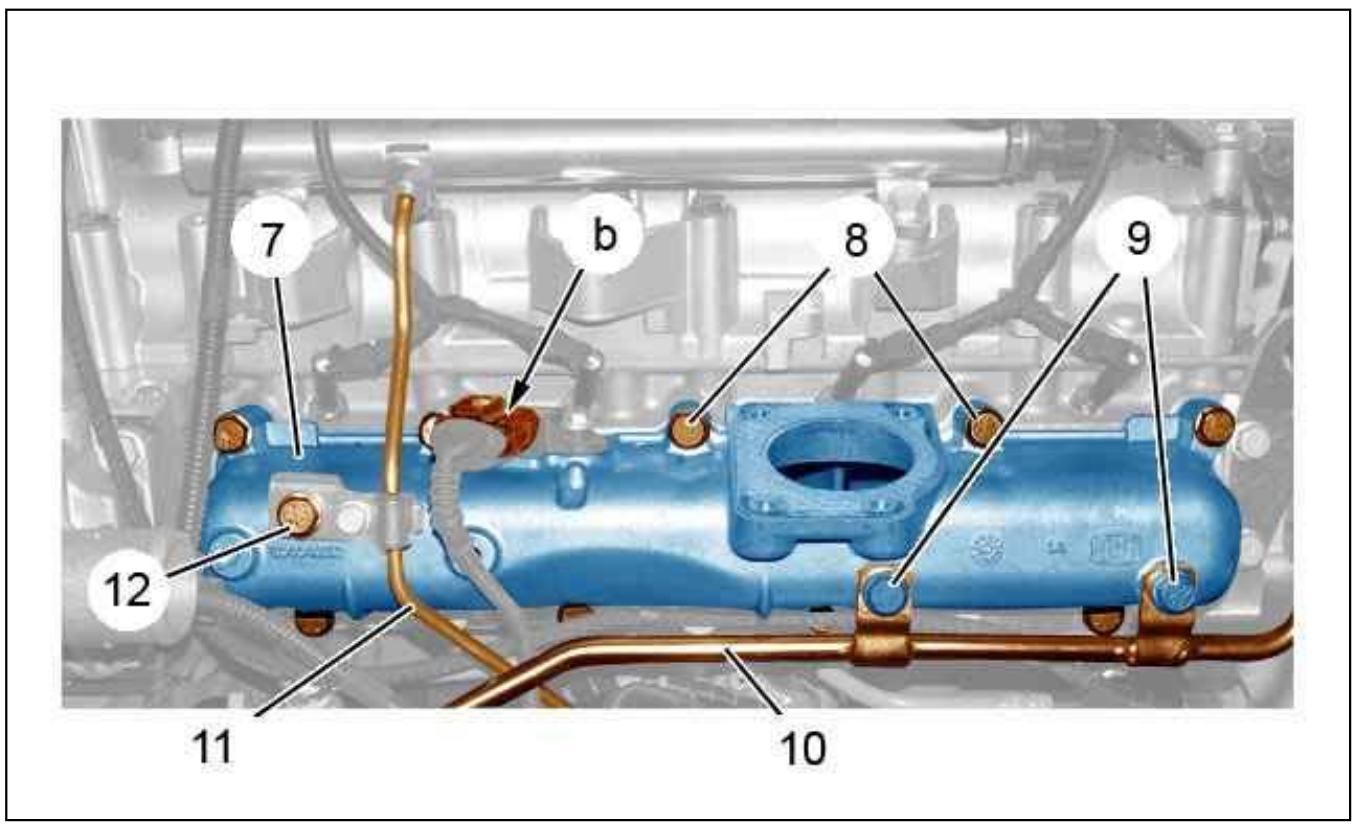

Figure : B1HP2VBD

Disconnect the connector (as "b").
Remove the bolts (9).
Prise apart pipe (10).
Remove :

- The (12) bolt
- The high pressure fuel pipe (11) (see the relevant operation)
- The bolts (8)
- The inlet manifold (7)

3. Refitting

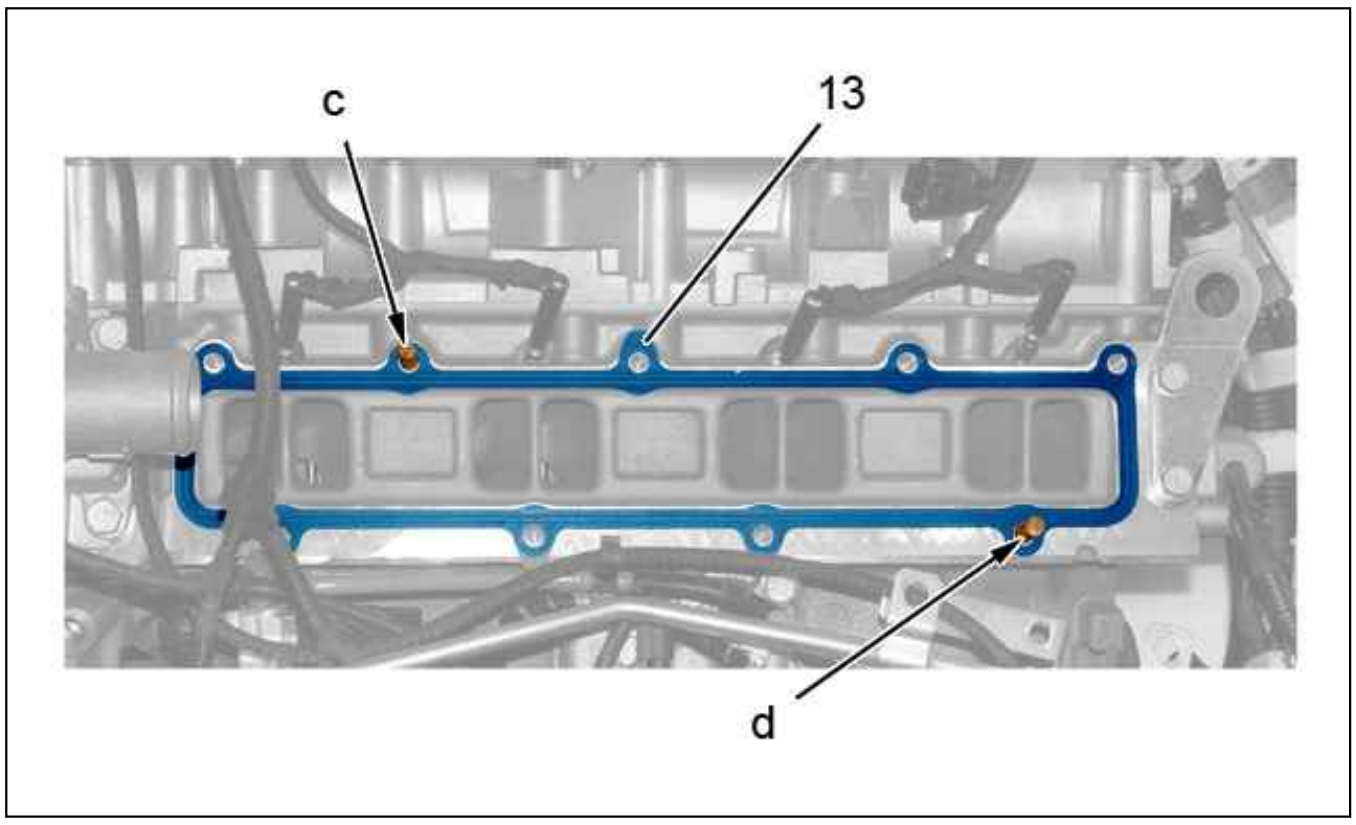

Figure : B1DP24XD

Make up 2 guides of diameter 8 X 100 and length 80 mm.
Put the 2 guides in place (as "c", "d").
Refit :

- The seal (13) (new)
- The inlet manifold (7)
- The 10 bolts (8)

Tighten the 10 bolts (8) to 3 ± 0,3 daN.m.
Refit :

- The high pressure fuel pipe (11) (New) (see the relevant operation)
- The (12) bolt

Tighten :

- The high pressure fuel pipe (12) union on the fuel high pressure common injection rail side to 1,9 ± 0,2 m.daN (see the relevant operation)
- The high pressure fuel pipe (12) union on the high pressure fuel pump side to 2,5 ± 0,2 m.daN (see the relevant operation)

Reposition the tube (10).
Refit :

- The bolts (9) ; Tighten to 2,8 ± 0,2 daN.m
- The air inlet neck (5)
- The 4 bolts (6) ; Tighten to 2,8 ± 0,2 daN.m

Position the electrical harness.
Reconnect the connectors (as "a", "b").
Re-couple the air pipe (4).
Continue the fitting operations in the reverse order to the removal operations.
Reconnect the battery.

REMOVING - REFITTING : HIGH PRESSURE FUEL PUMP

ESSENTIAL : Observe the safety and cleanliness recommendations .

1. Recommended tools

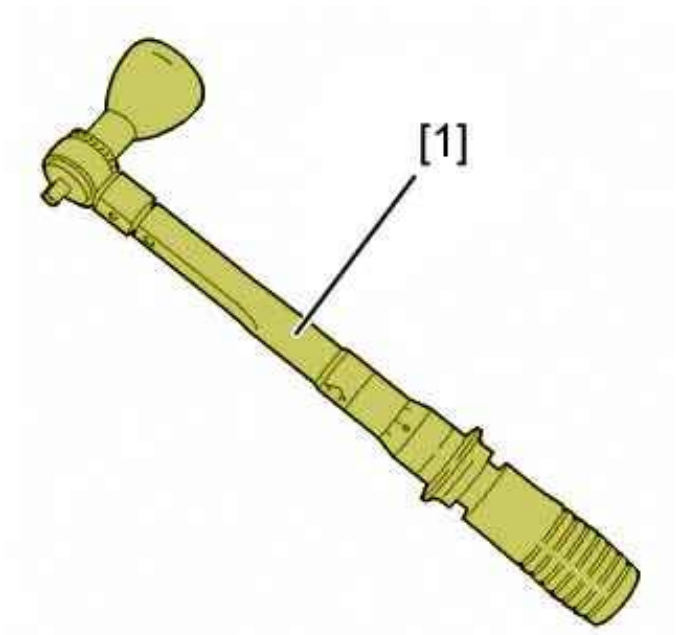

Figure : E5AP2Z6D

Reference	Designation	Reference	Reference
[1]	Torque wrench	(-).4220-T.B (kit (-).4220-T)	(-).1603 (kit (-).1603-A/B/D)

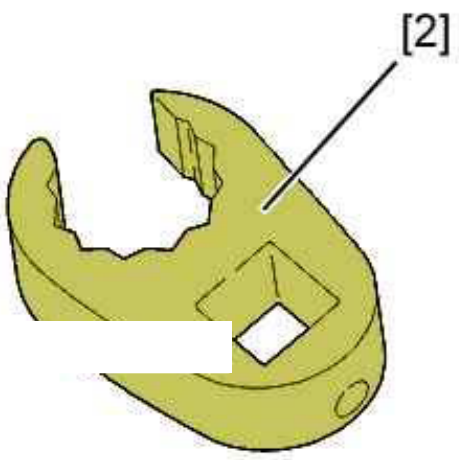

Figure : E5AP2Z7D

[2] pipe spanner (-).4220-T.B (kit (-).4220.T).

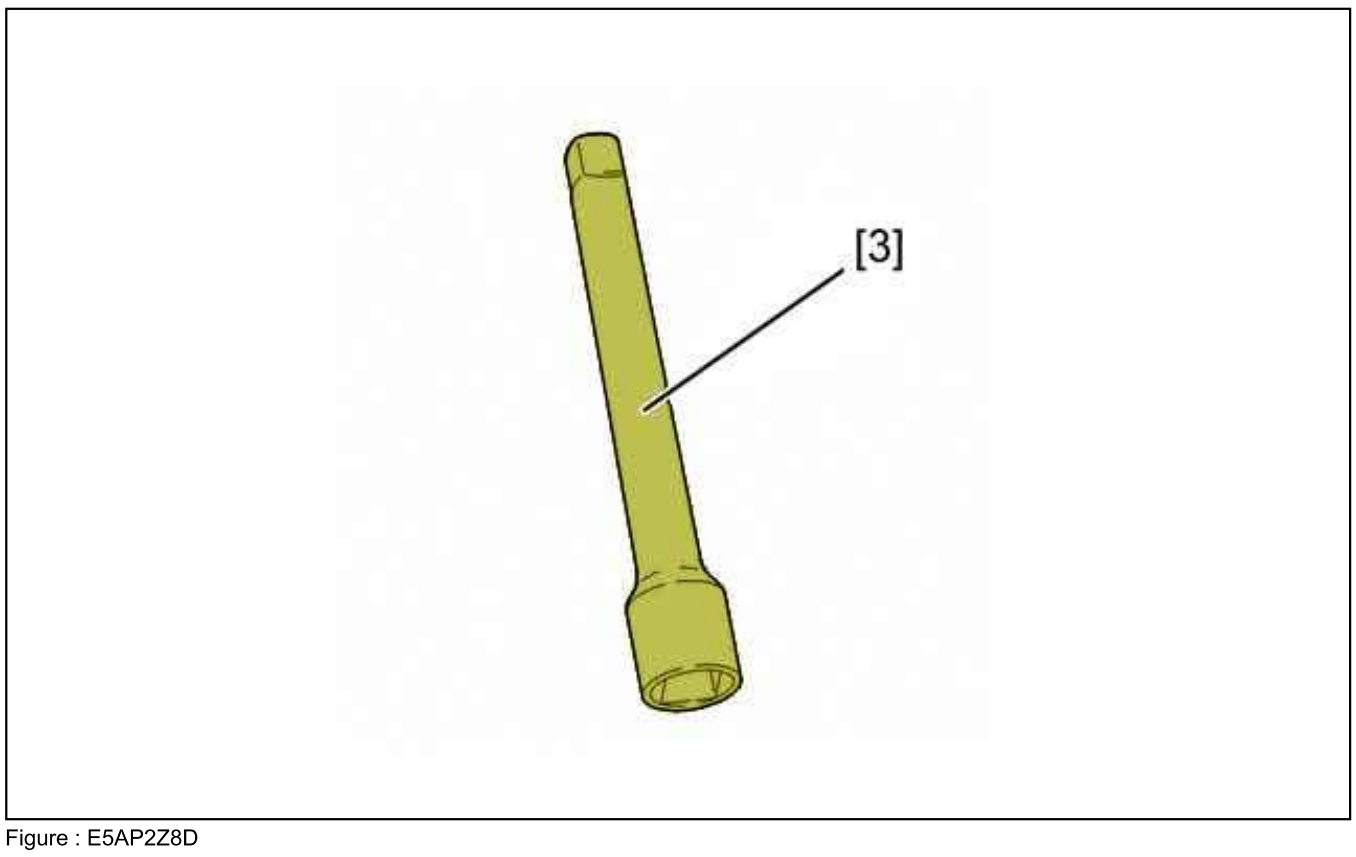

Figure : E5AP2Z8D

Reference	Designation	Reference	Reference
[3]	Extension	(-).4220-T.J (kit (-).4220.T)	(-).1603-E (kit (-).1603)

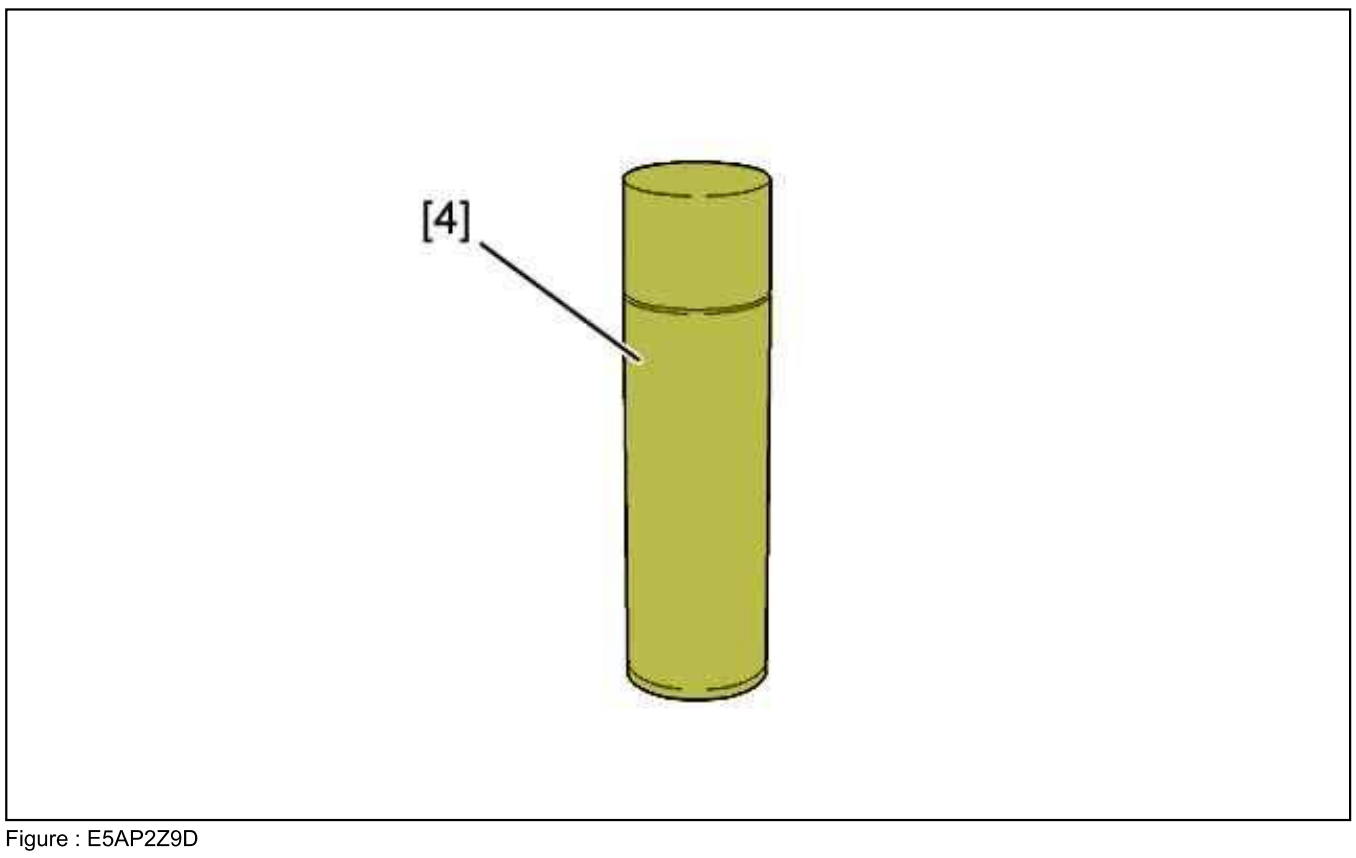

Figure : E5AP2Z9D

[4] leak detector ARDROX 9D1 BRENT

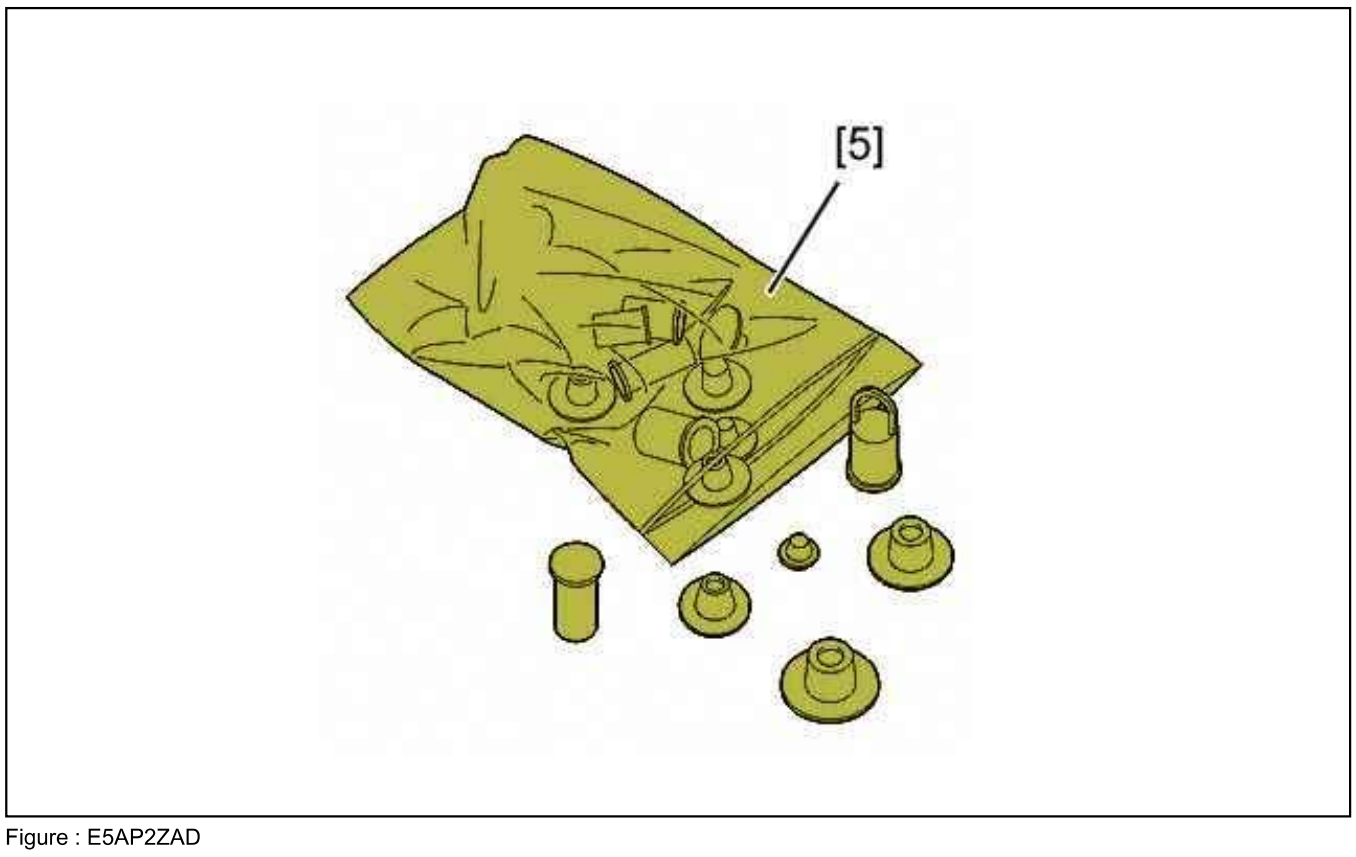

Figure : E5AP2ZAD

[5] plugs kit (-).0188-T.

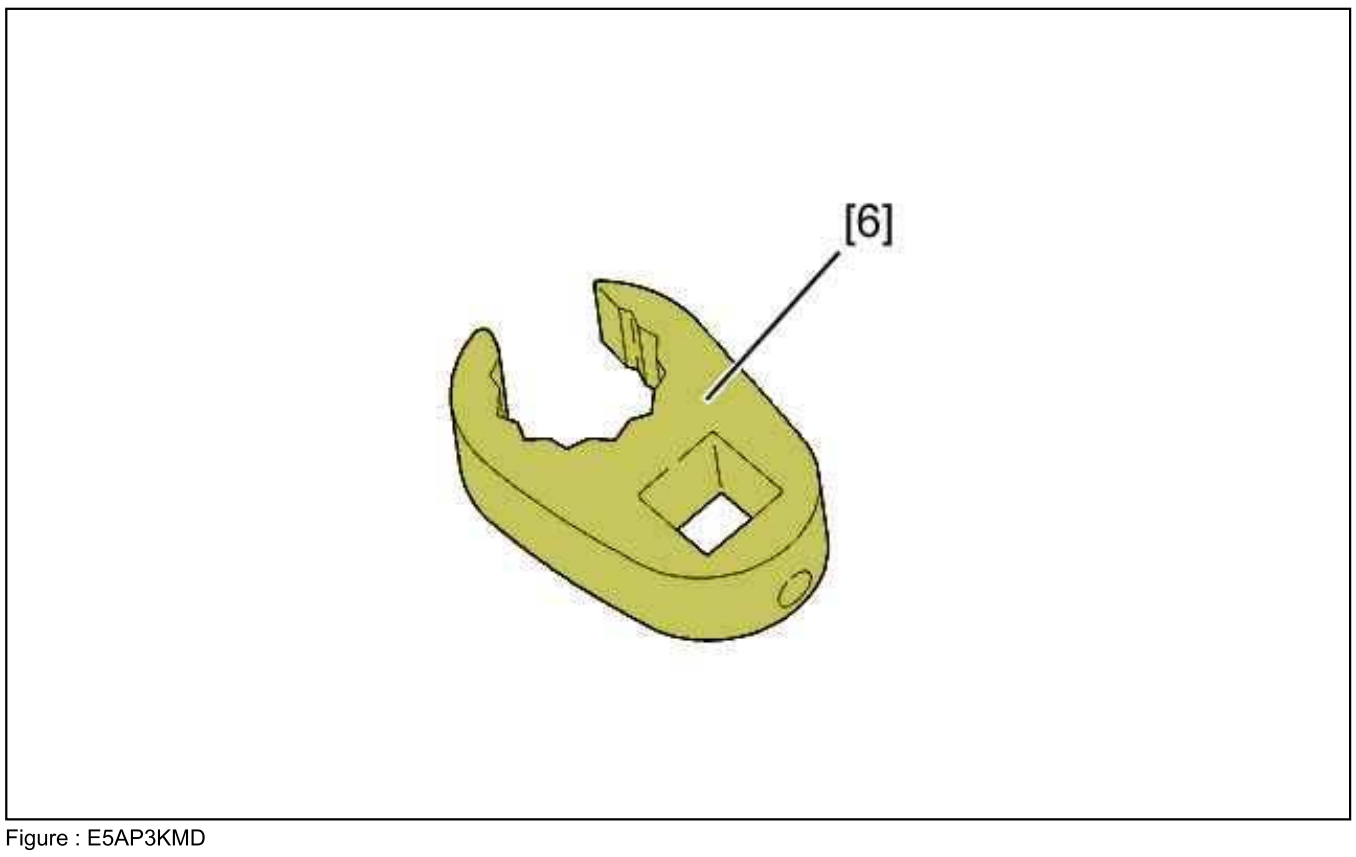

Figure : E5AP3KMD

[6] pipe spanner (-).4220-T.D (kit (-).4220-T).

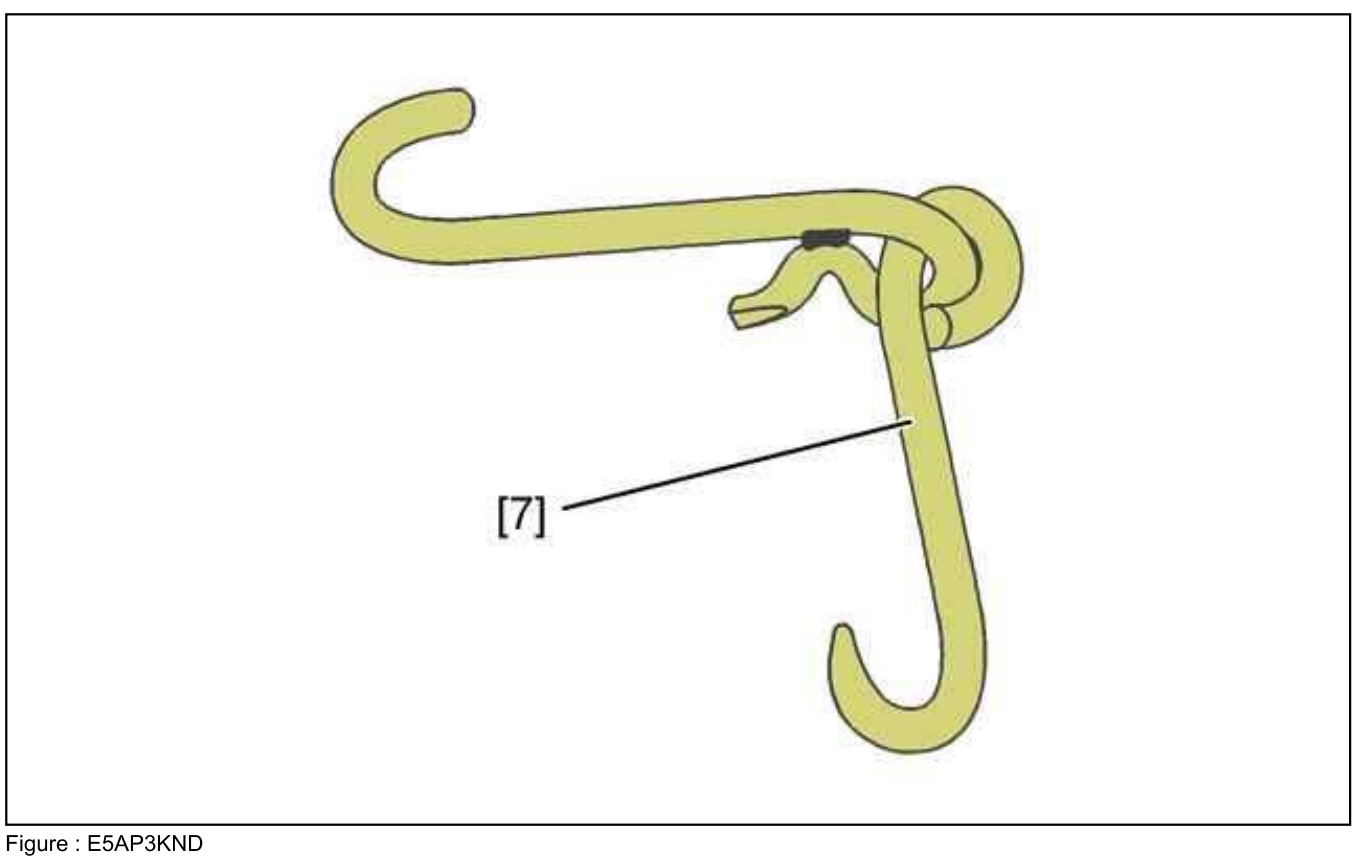

Figure : E5AP3KND

Reference	Designation	Reference	Reference
[7]	Bonnet retaining hook	5706-T	(-) 1331

2. Removing

ESSENTIAL : Respect the safety and cleanliness recommendations that are specific to high pressure diesel injection (HDi) engines .

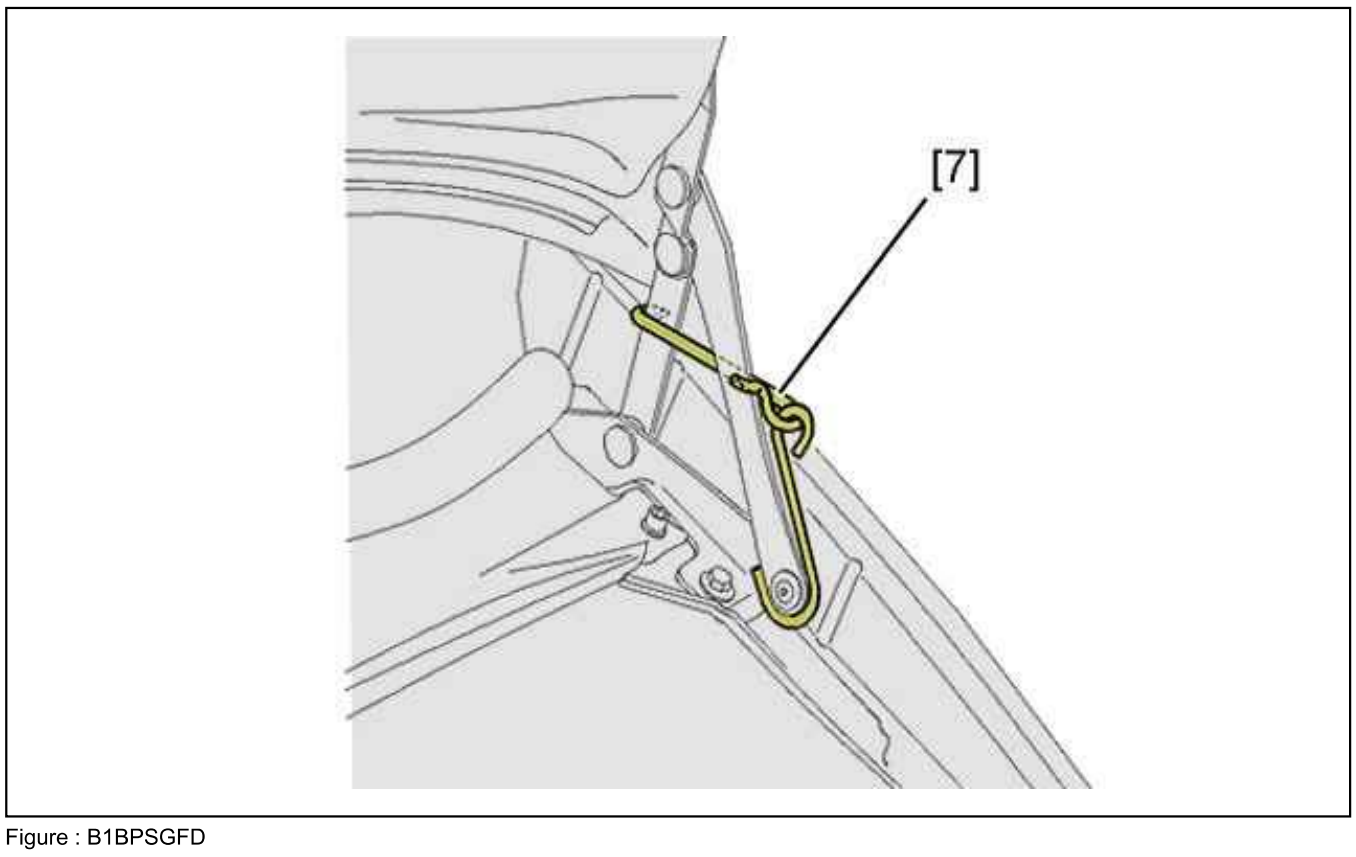

Figure : B1BPSGFD

Put the bonnet in the vertical position ; Using tool [7].

Remove :

- The central bumper (Upper - Lower) (see the relevant operation)
- The bonnet opening control (see the relevant operation)

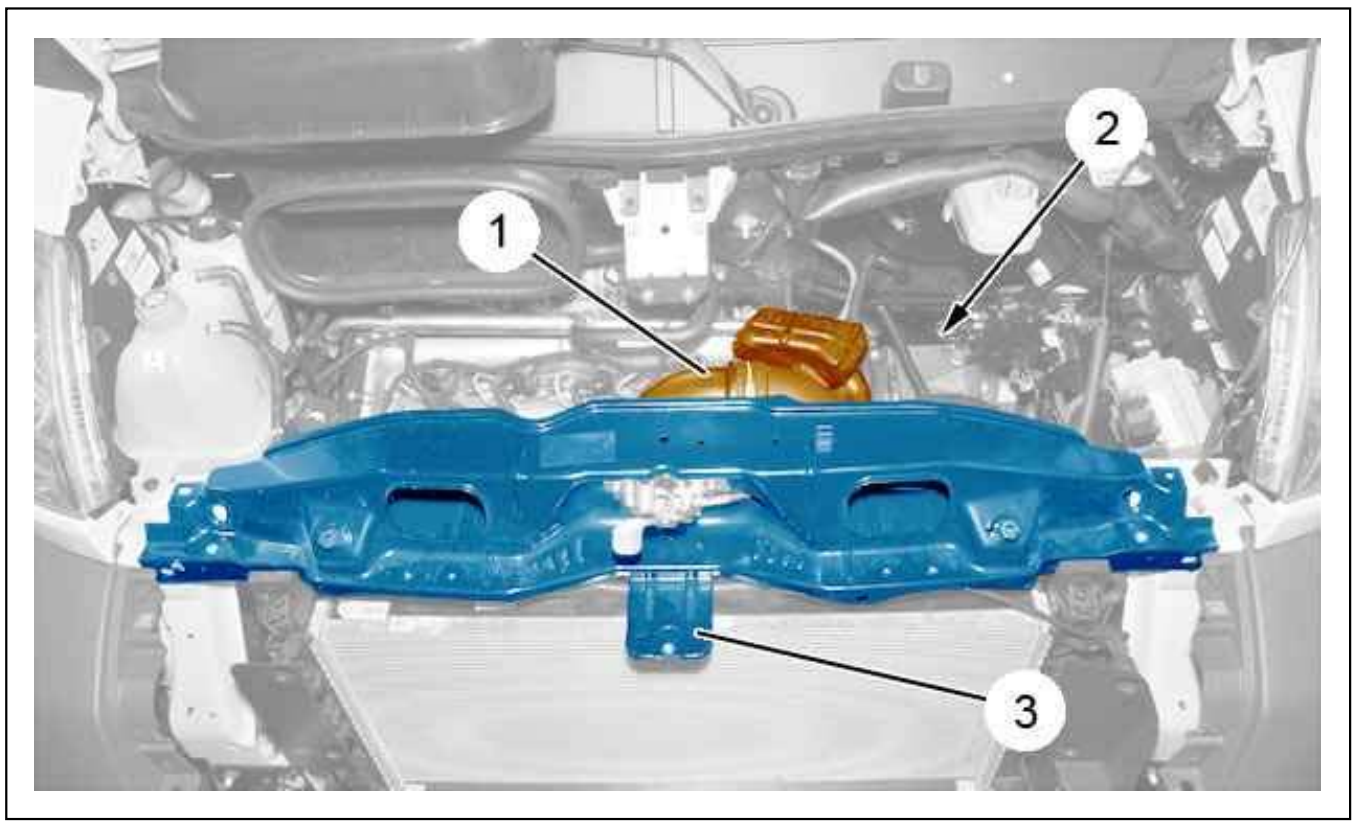

Figure : B1BPSG8D

Remove :

- The front panel upper crossmember (3) (see the relevant operation)
- The air filter (2) complete
- The air duct (1)

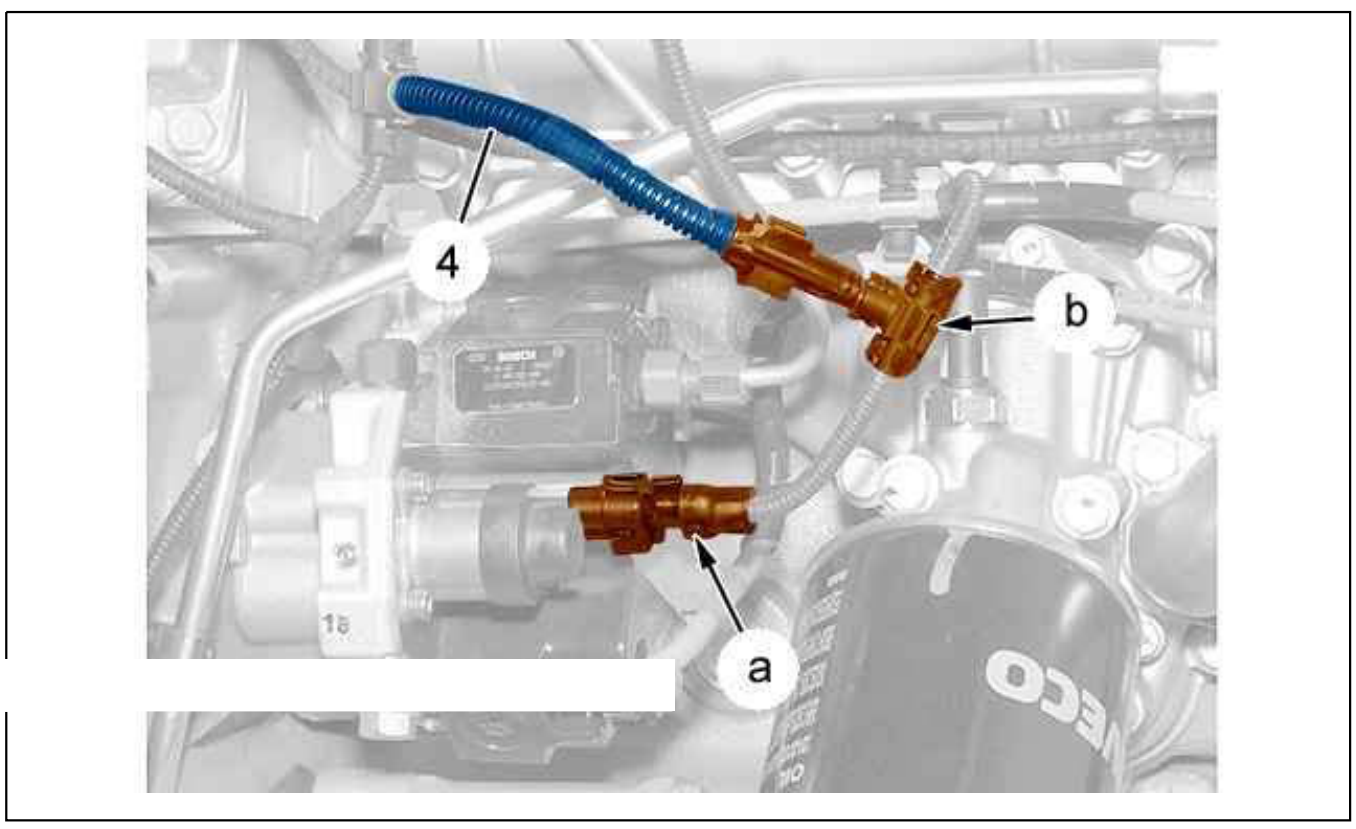

Figure : B1HP2VFD

Unplug :

- The connector (at "a")
- The connector (at "b")

Move aside the electrical harness (4).

CAUTION : Clean the high pressure union before slackening (See the corresponding operation).

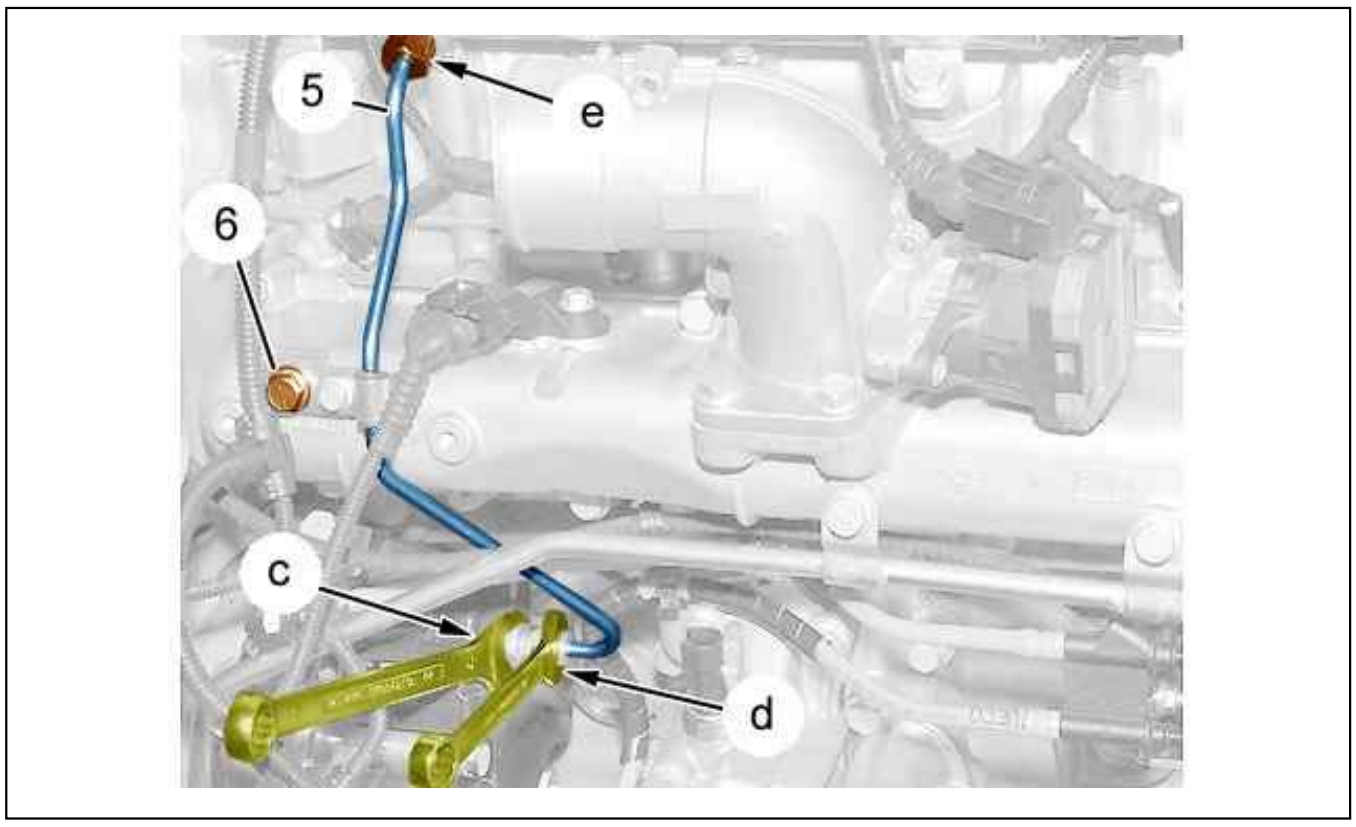

Figure : B1HP2VGD

Remove the bolt (6).
Apply a counter-torque (at "c").
Slacken the unions "d", "e" of the fuel high pressure supply pipe (5).
Remove the fuel high pressure supply pipe (5).

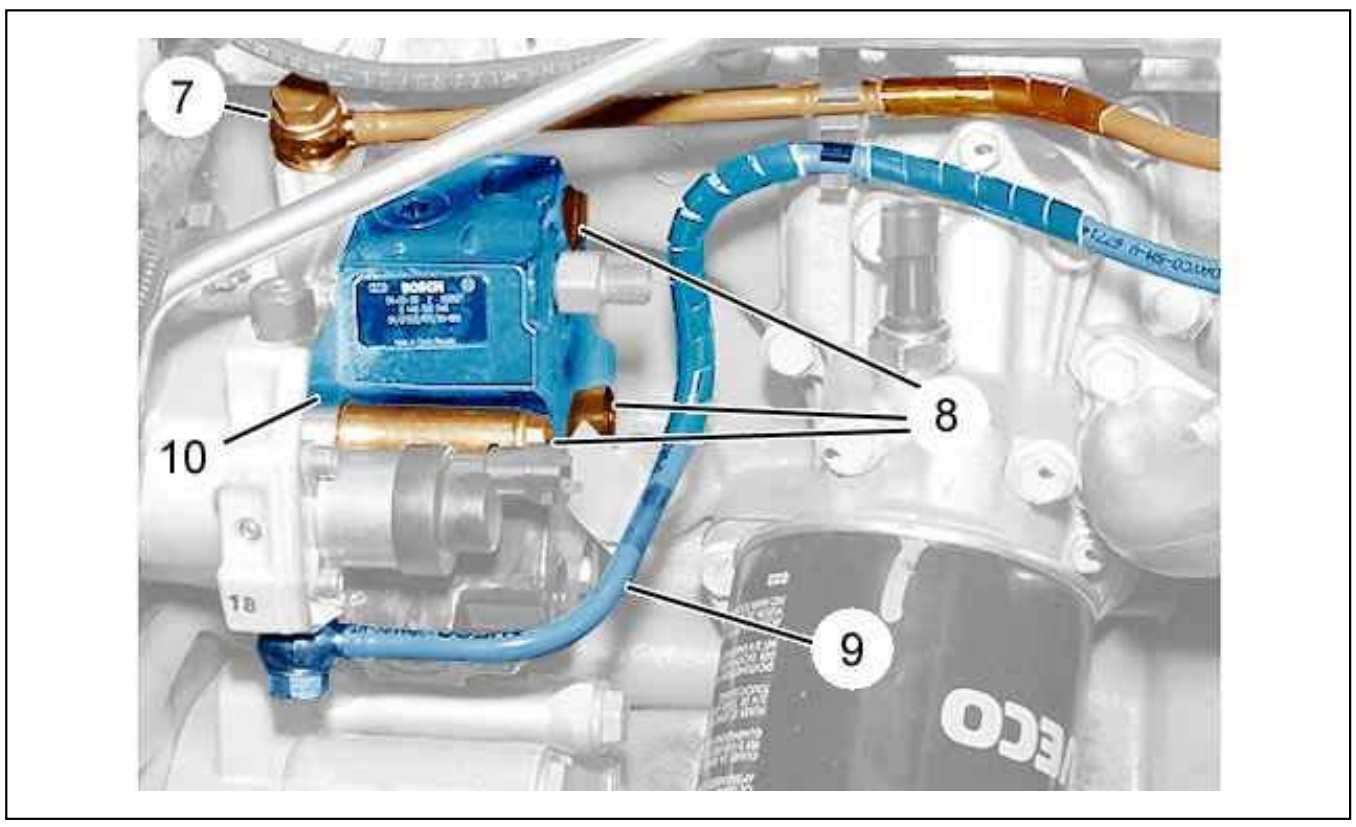

Figure : B1HP3VHD

Uncouple :

- The diesel fuel delivery pipe (7)
- The diesel return pipe (9)

CAUTION : Plug the orifices of the high pressure pump (10) ; Using tool [5].

Remove :

- The bolts (8)
- The fuel high pressure pump (10)

3. Refitting

CAUTION : Replace a new high pressure tube (5).

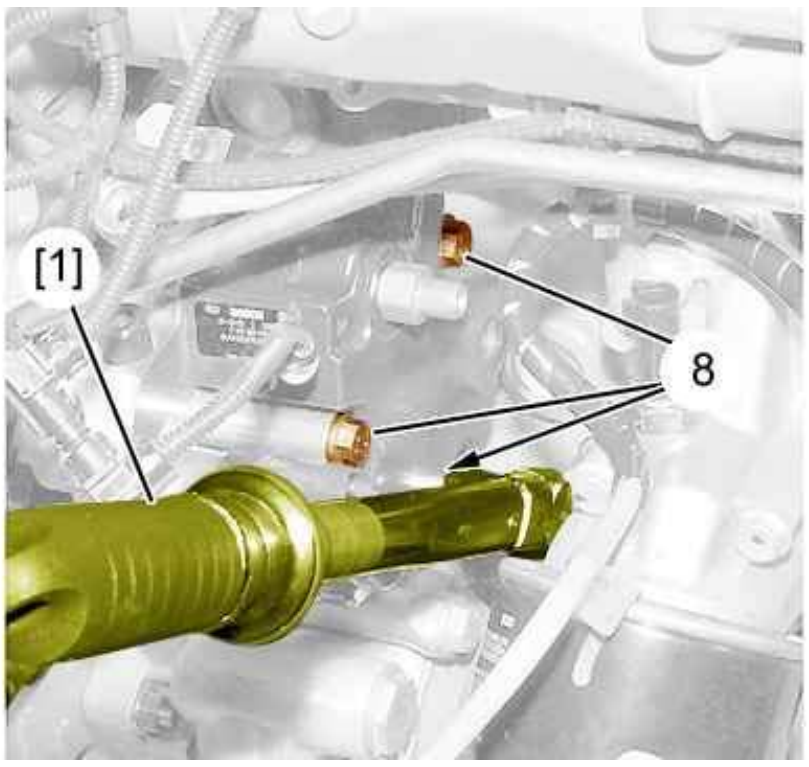

Figure : B1HP2VJD

Refit :

- The fuel high pressure pump (10)
- The bolts (8) ; Tighten to 2,8 ± 0,3 daN.m ; Using tool [1]
- The high pressure supply pipe (5)
- The (7) bolt

Do up the high pressure unions by hand.

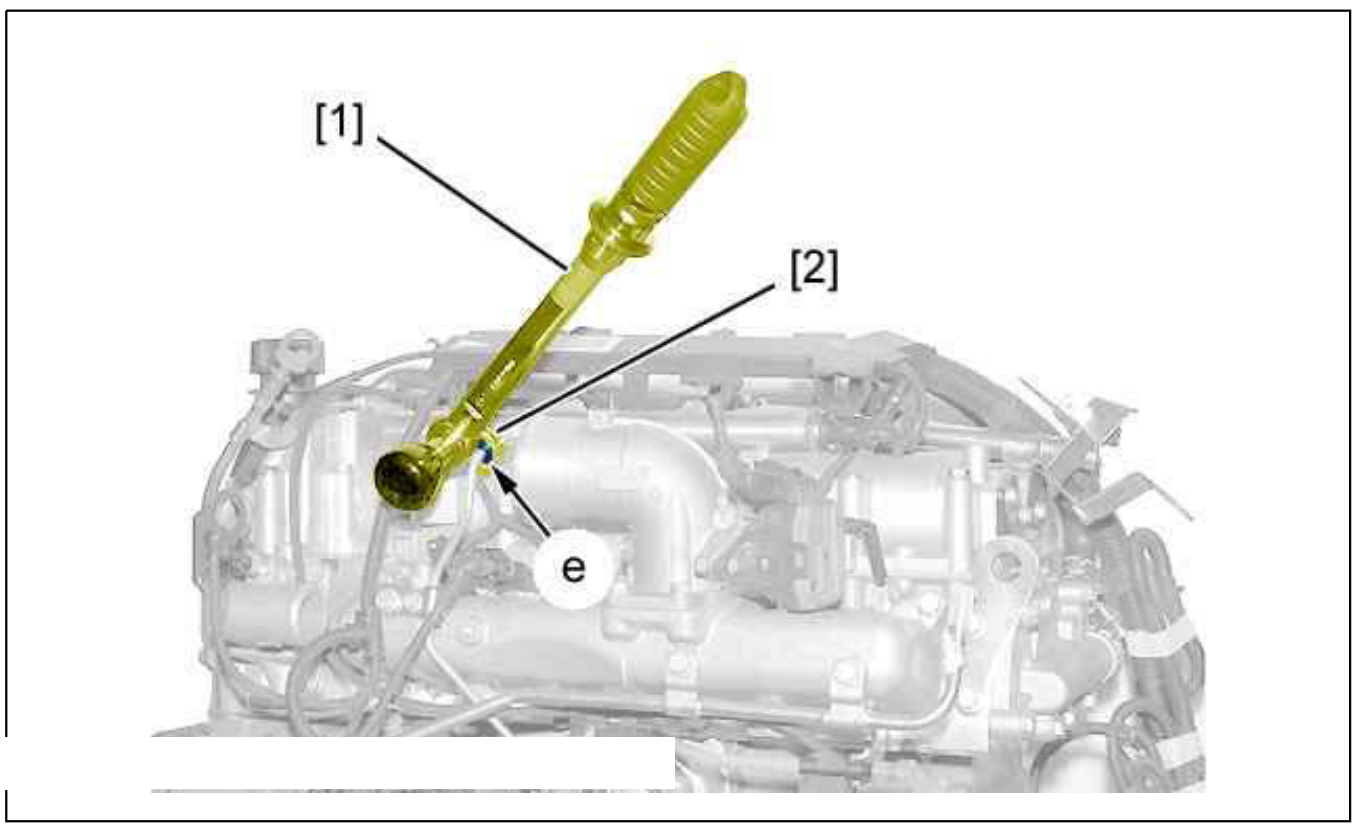

Figure : B1CP0MJD

Tighten the union "e" to 2,2 ± 0,2 m.daN ; Using the tools [1], (2), [3].

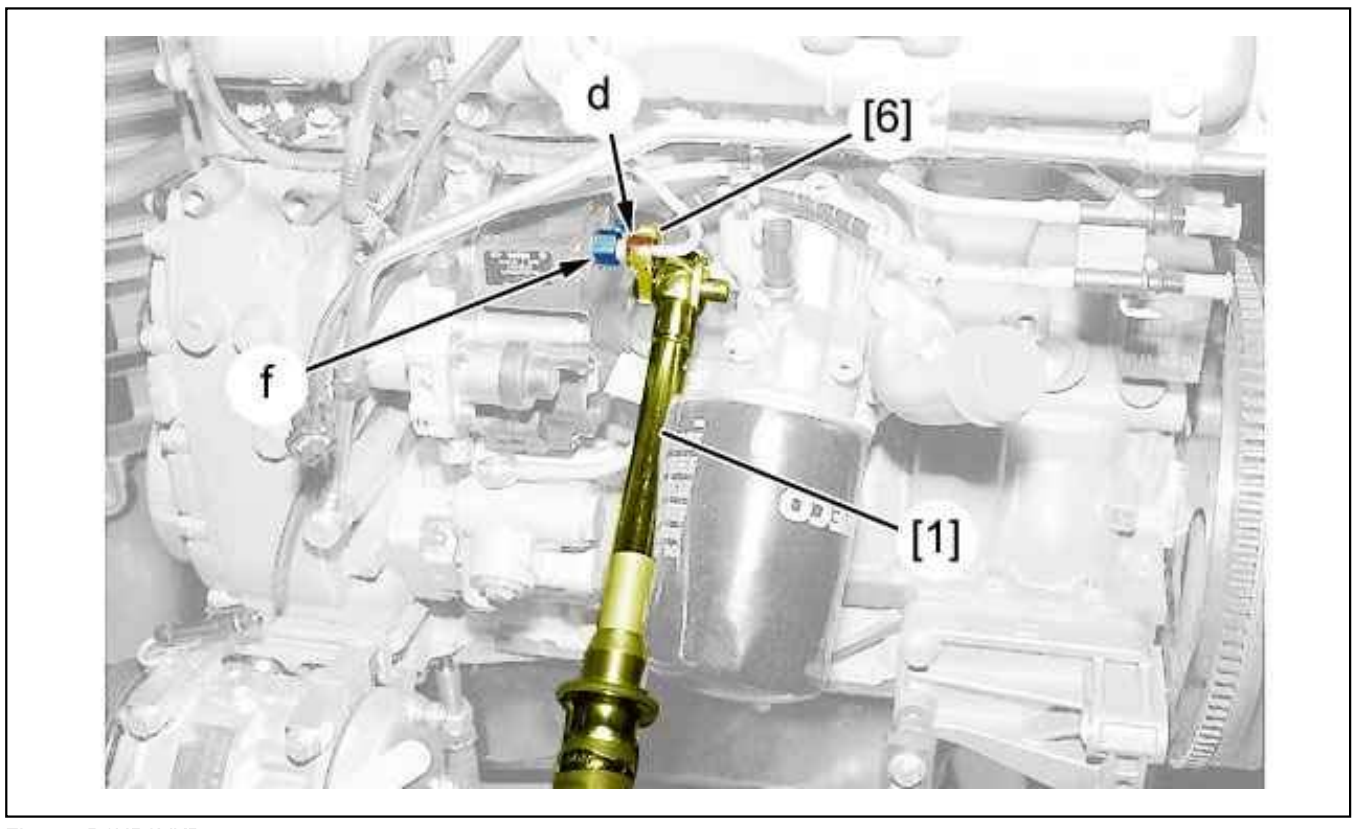

Figure : B1HP2VKD

Apply a counter-torque (at "f").
Tighten the union "d" to 2,7 ± 0,2 m.daN ; Using the tools [1], [6].

3.1. Additional operations

Couple up :

- The diesel return pipe (9)
- The diesel fuel delivery pipe (7)

Tighten the banjo unions of the pipes (7), (9) to 2,5 ± 0,2 m.daN ; Using tool [1].
Continue the fitting operations in the reverse order to removal.

3.2. Checking for leaks

CAUTION : Spray the product [4] onto the high pressure pipe union .

Allow the product to dry.
Start the engine.
Check there are no leaks.
Accelerate up to an engine speed of 4000 rpm.
Check there are no leaks.
Carry out a road test.
Check there are no leaks.
Replace any defective parts (if necessary).

REMOVING - REFITTING : DIESEL INJECTORS

ESSENTIAL : Observe the safety and cleanliness recommendations .

1. Tooling

Equipment : Approved leak detector.

Tool	Reference	Designation
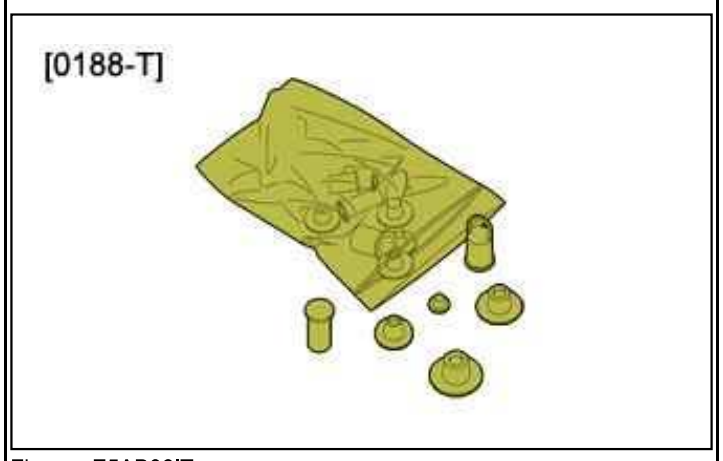 Figure : E5AB06IT	[0188-T]	Sealing plugs
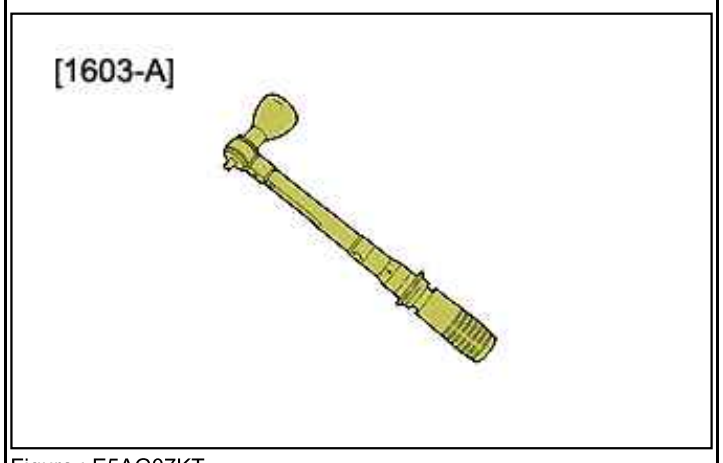 Figure : E5AG07KT	[1603-A]	Torque wrench
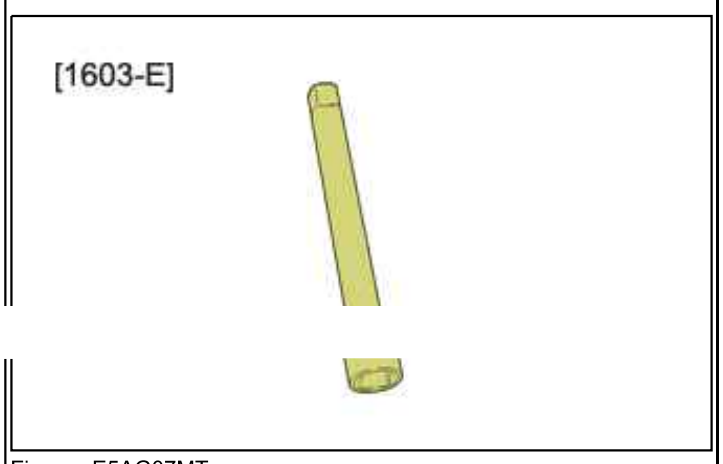 Figure : E5AG07MT	[1603-E]	Extension
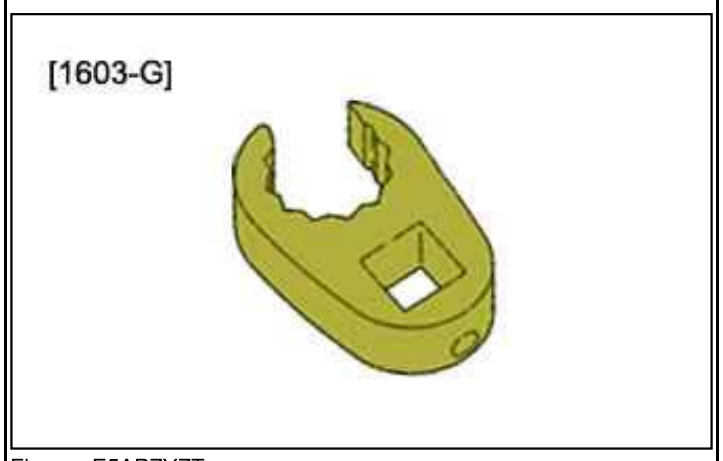 Figure : E5APZYZT	[1603-G]	pipe spanner
	[0191-2R]	Diesel injector extractor

 Figure : E5AB0YBT		
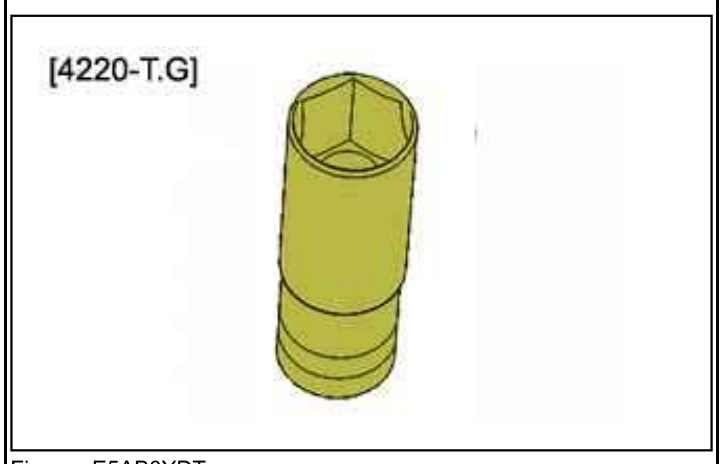 Figure : E5AB0YDT	[4220-T.G]	socket
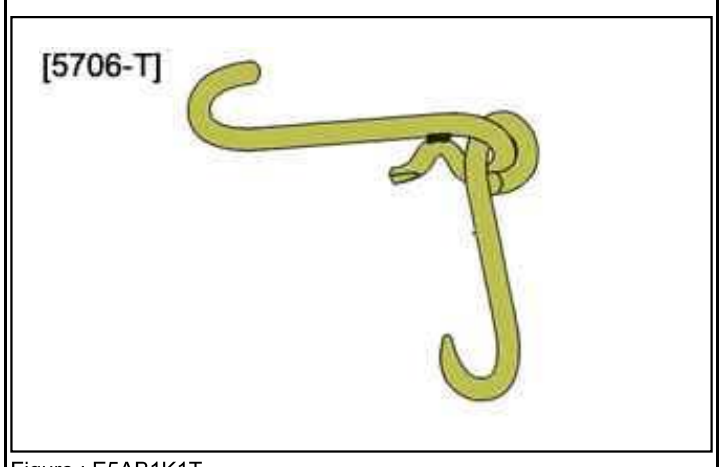 Figure : E5AB1K1T	[5706-T]	Bonnet retaining hook

2. Removing

ESSENTIAL : Respect the safety and cleanliness recommendations that are specific to high pressure diesel injection (HDi) engines .

Disconnect the ancillaries battery.

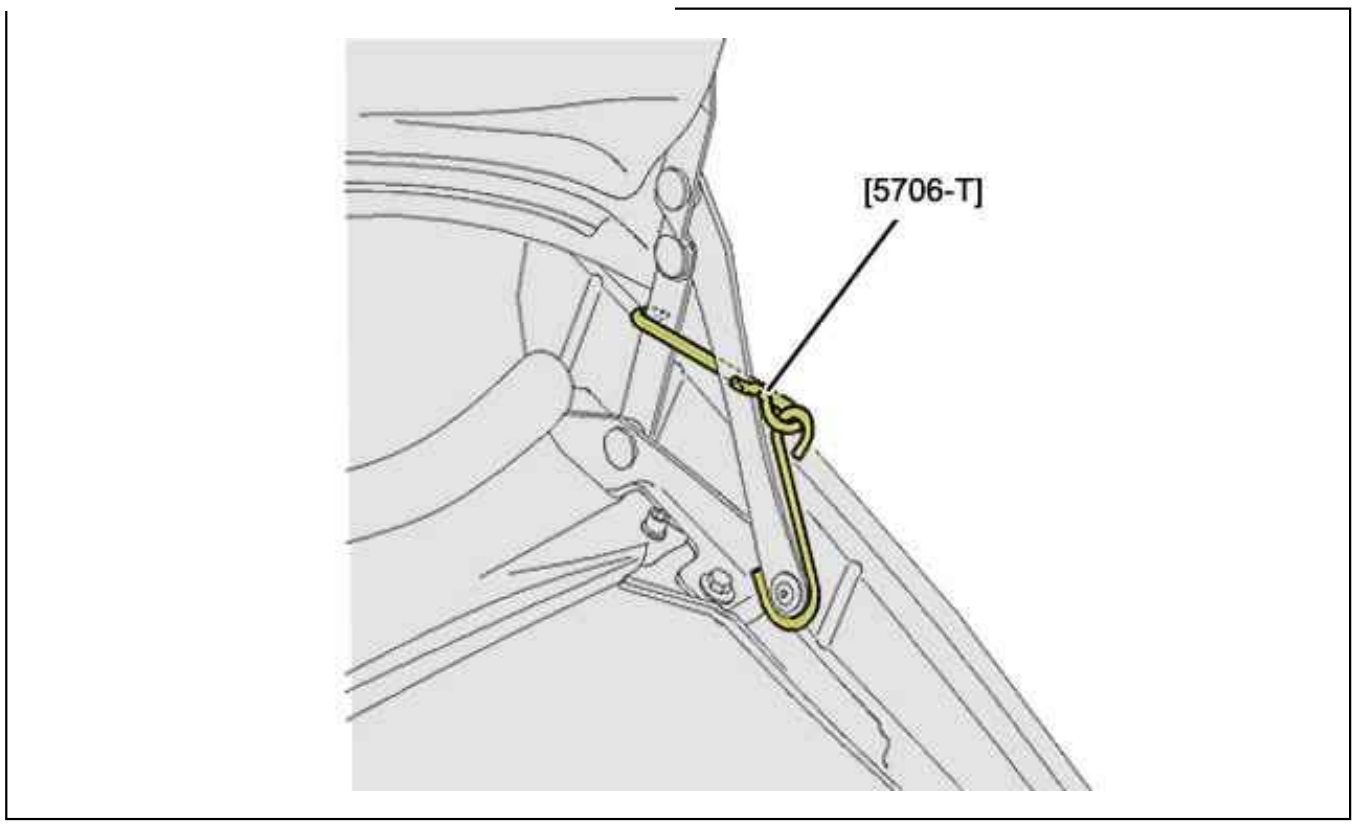

Figure : B1HG47AD

Put the bonnet in the vertical position ; Using tool [5706-T].

CAUTION : Clean the high pressure unions before slackening.

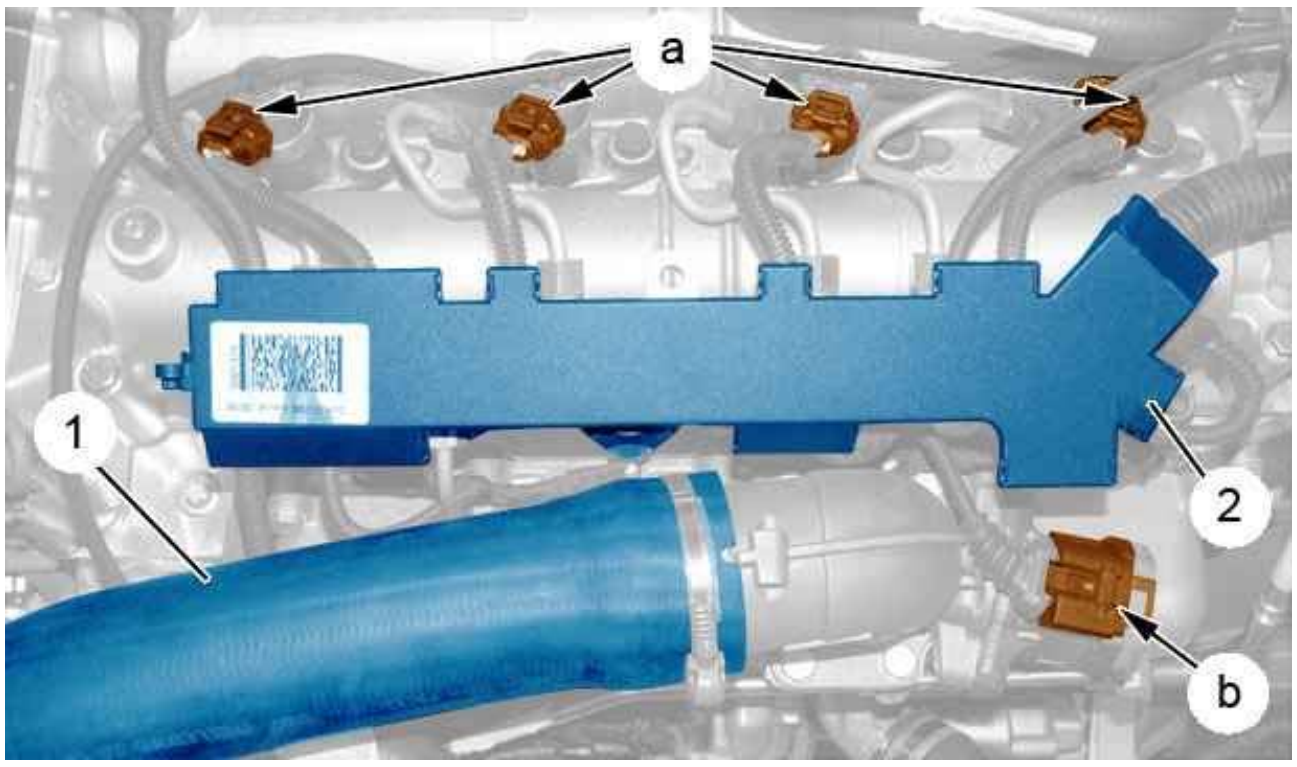

Figure : B1HP2VRD

Unplug :

- The connectors (at "a")
- The connector (at "b")

Move aside the electrical harness sheathing (2).
Uncouple the air duct (1).
Move aside the air duct (1).

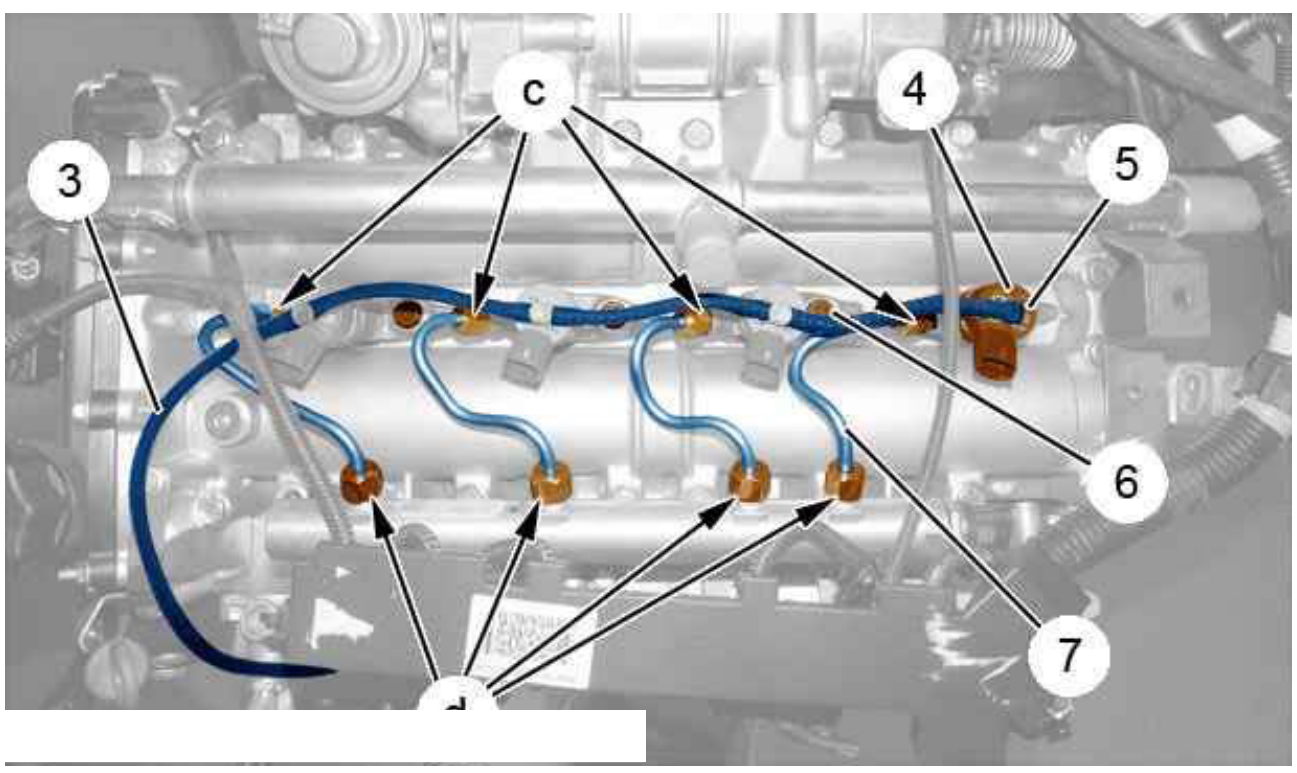

Figure : B1HP2VSD

CAUTION : Clean the high pressure unions before slackening.

CAUTION : Mark the location of the diesel injectors (if the injectors are to be reused).

Remove the diesel injector fuel return rail (3).
Unscrew :

- The unions (at "c")
- The unions (at "d")

Remove the high pressure supply pipes (7).

CAUTION : Plug the unions on the diesel injector and fuel high pressure common injection rail ; Using the tools [0188-T].

Remove :

- The bolts (6)
- The clamps (5)
- The diesel injectors (4)

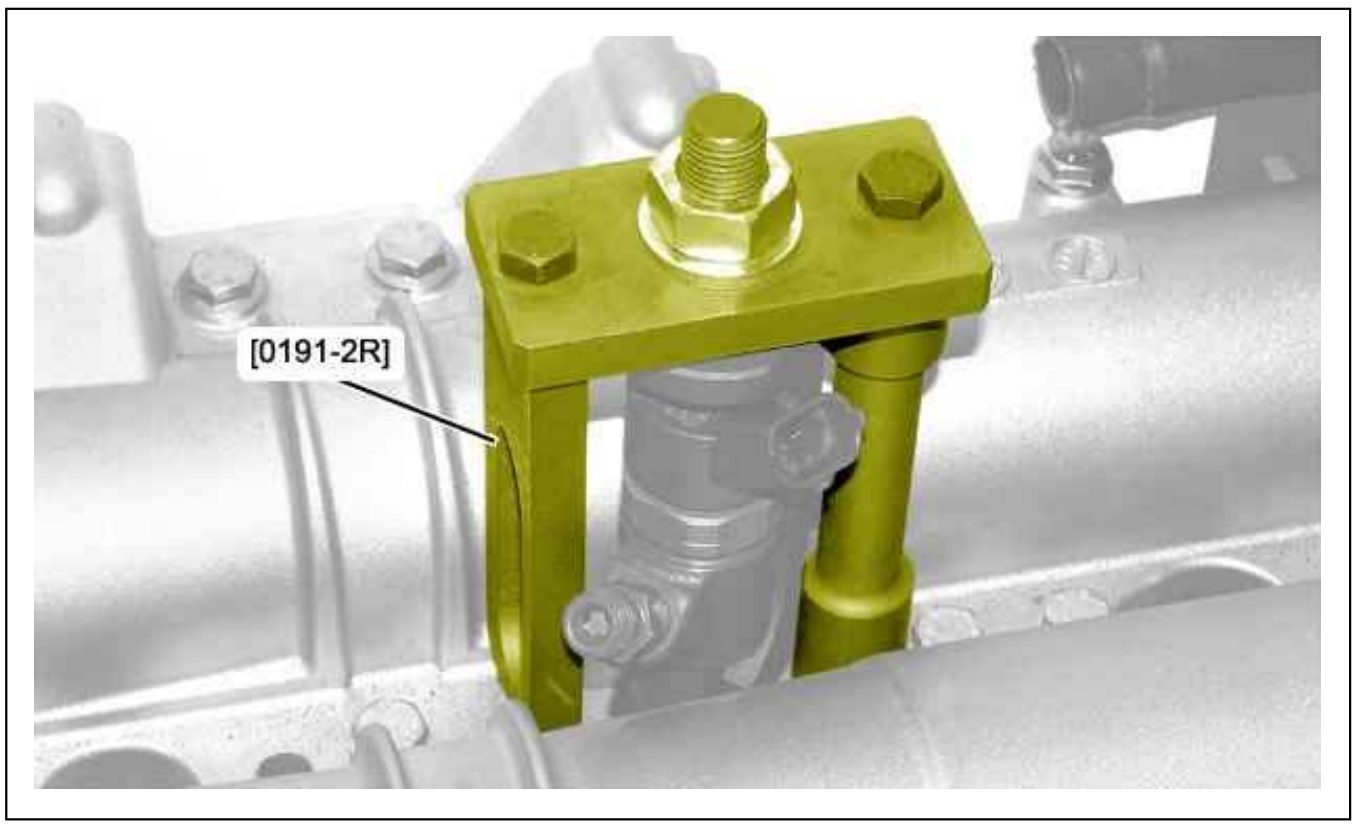

Figure : B1HG47BD

N.B. : Should it prove impossible to remove one of the diesel injectors : Use tool [0191-2R].

Plug the diesel injector wells.

3. Refitting

CAUTION : Adhere to the tightening torques .

ESSENTIAL : Respect the safety and cleanliness recommendations that are specific to high pressure diesel injection (HDi) engines .

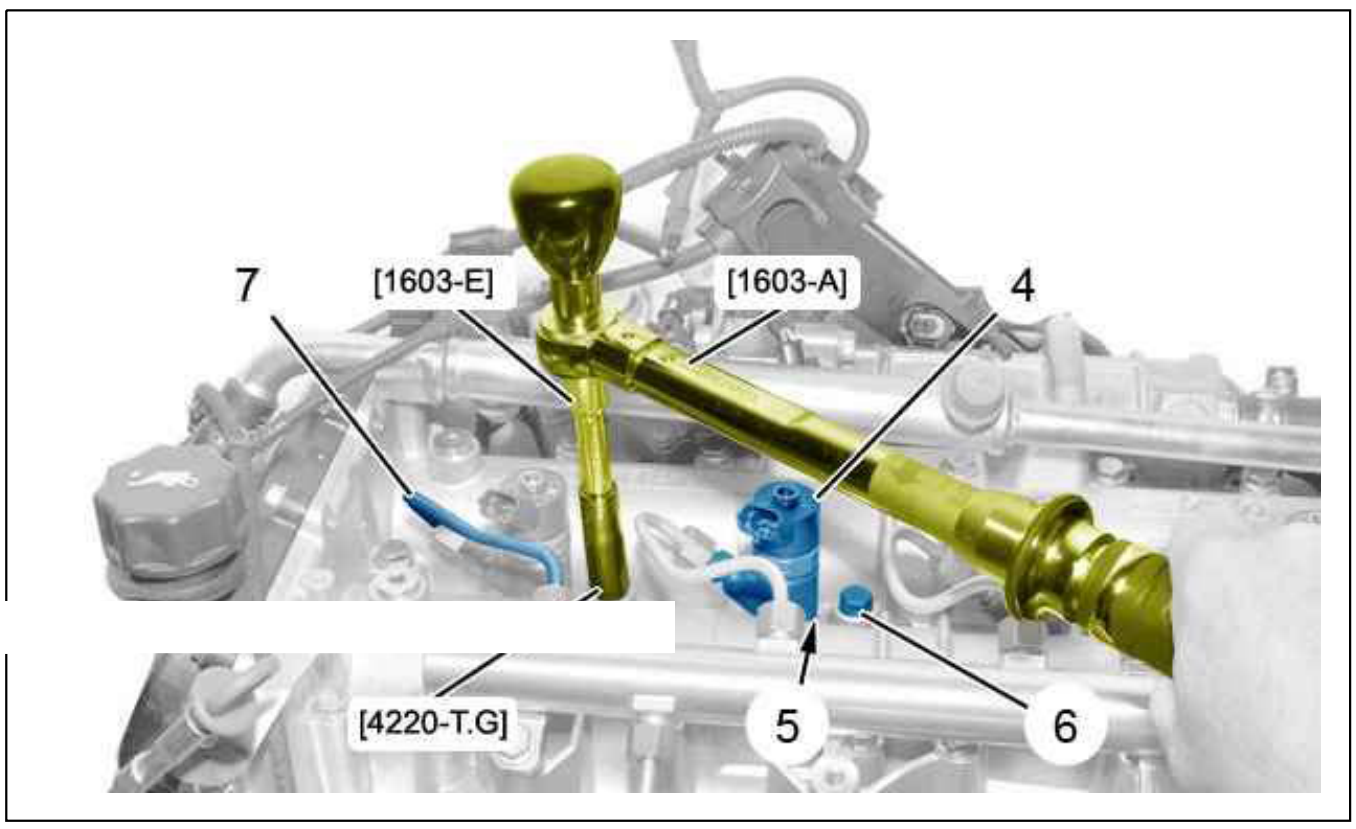

Figure : B1HG47CD

CAUTION : Replace the removed diesel injection high pressure pipe(s).

Remove the diesel injector well blanks.

CAUTION : Refit the diesel injectors observing the marks made on removal (if the injectors are to be reused).

Refit :

- The diesel injectors (4) fitted with a new centring ring
- The clamps (5)
- The bolts (6) (without tightening)

Refit the diesel injector high pressure fuel supply pipes (7) (new) :

- Tighten to the end of the thread and by hand the unions on the diesel injectors (4) (at "c") and the unions on the fuel high pressure common rail (at "d")
- Tighten the bolts (6) of the flanges (5) of the diesel injectors (4); Using the tools [1603-A], [1603-E], [4220-TG]

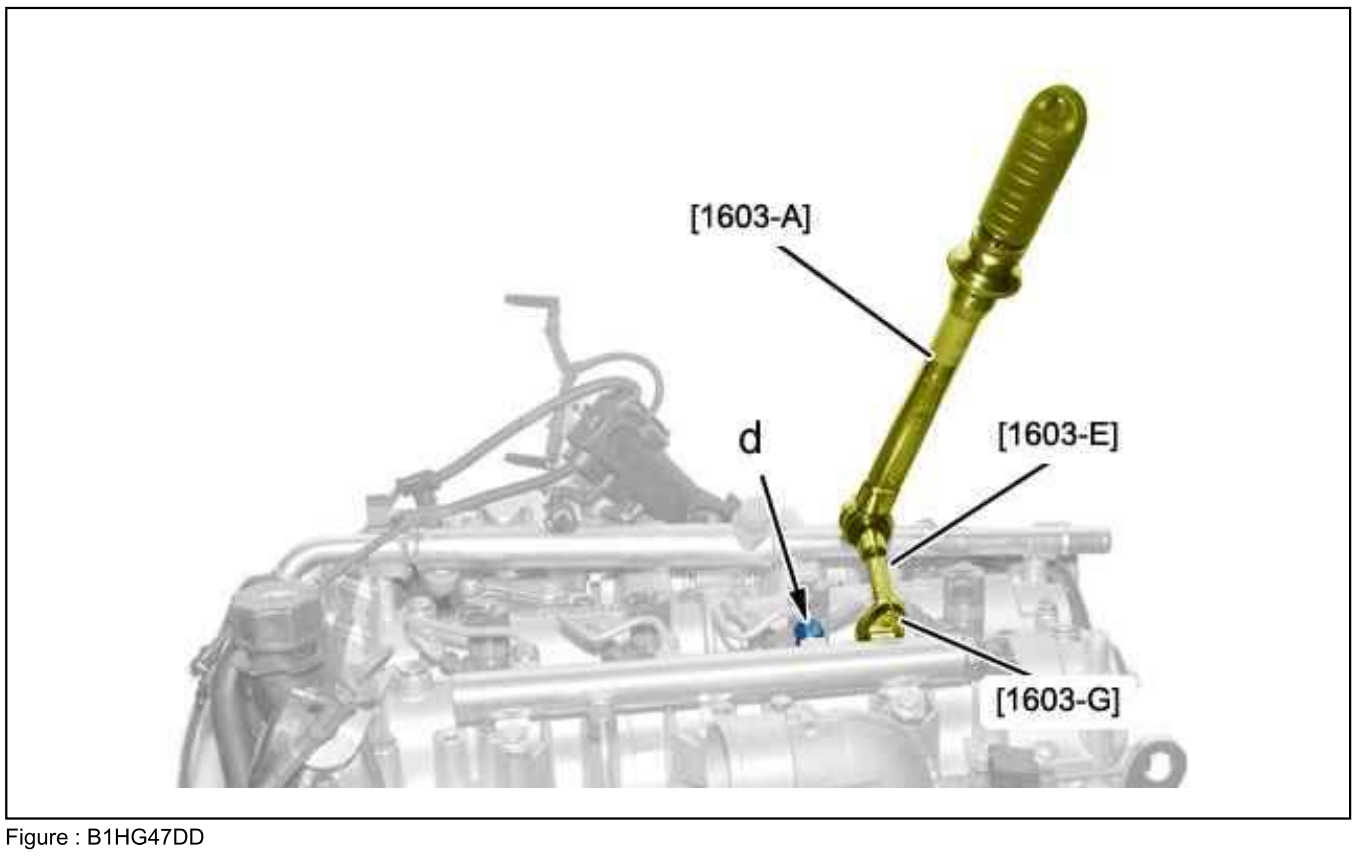

Figure : B1HG47DD

Tighten the unions on the fuel high pressure common injection rail (at "d"); Using the tools [1603-A], [1603-E], [1603-G].

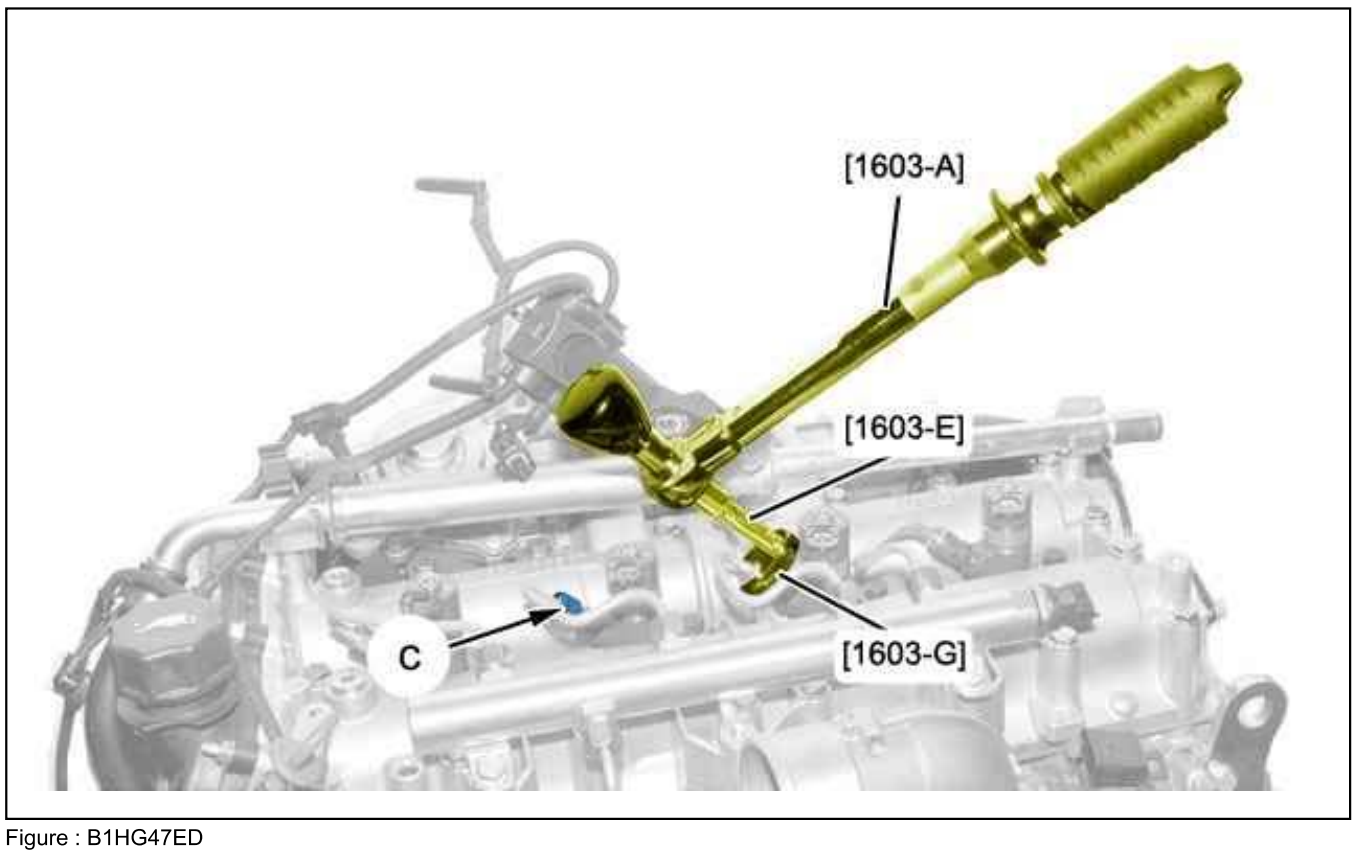

Figure : B1HG47ED

Tighten the unions (4) on the diesel injectors (at "c"); Using the tools [1603-A], [1603-E], [1603-G].
Refit the diesel injectors (4) fuel return rail (3).

Position the electrical harness sheathing (2).
Reconnect the connectors (at "a", "b").

CAUTION : Perform the operations that are required following a reconnection of the ancillaries battery.

Reconnect the ancillaries battery .
Remove the tool [5706-T].

4. Diesel injectors - cylinders pairing (new)

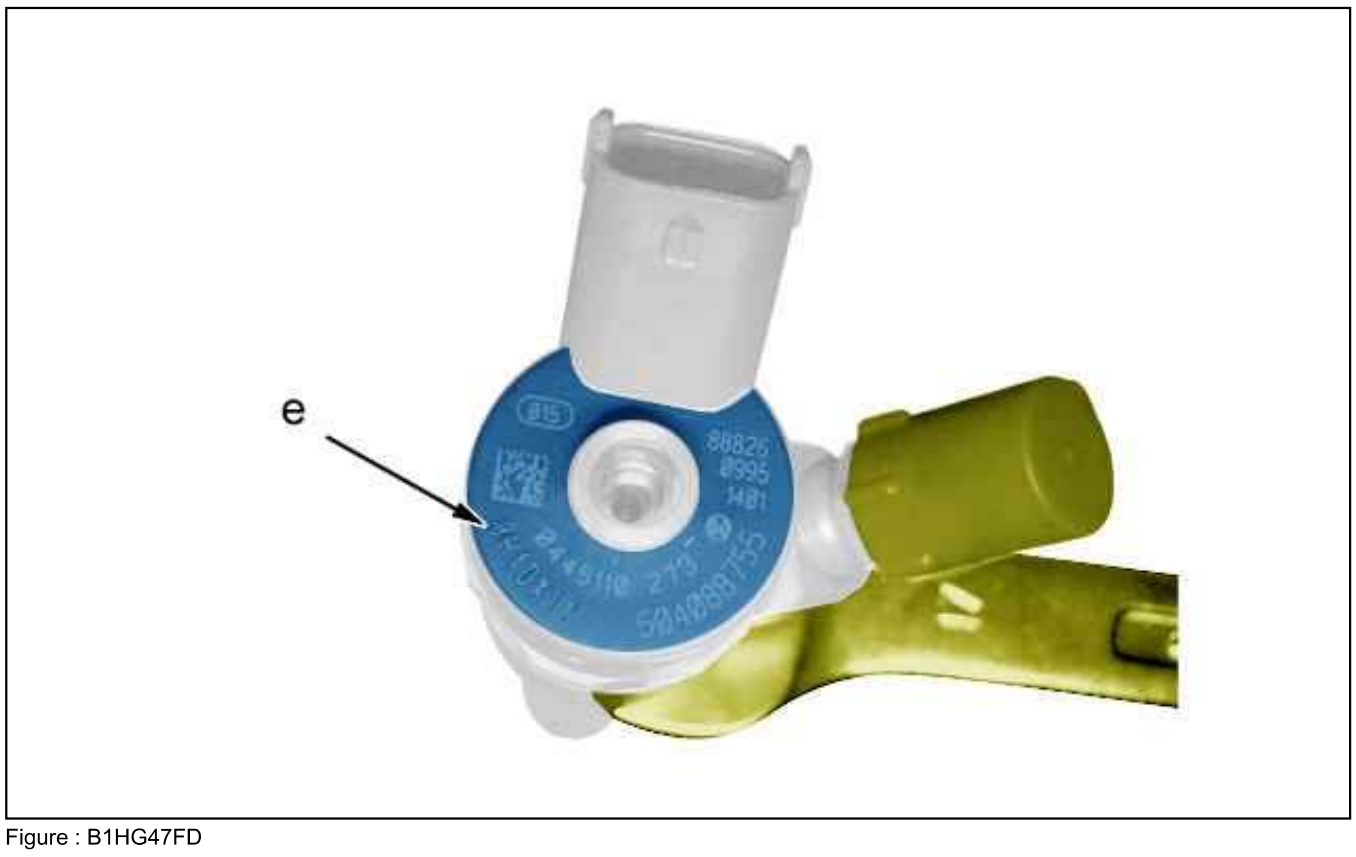

Figure : B1HG47FD

"e" : Alphanumeric characters.
Allocate the 4 diesel injectors (4) to the cylinders in accordance with the injector code (at "e") ; Using the diagnostic equipment.

5. Checking for leaks

CAUTION : Spray the leak detector product on the diesel injector unions and on the fuel high pressure common injection rail .

Method of checking :

- Allow the product to dry
- Start the engine
- Check the absence of leaks
- Accelerate up to an engine speed of 4000 rpm
- Check the absence of leaks
- Carry out a road test
- Check the absence of leaks

Replace any defective parts (if necessary).

DRAIN - REFILL : FUEL TANK

ESSENTIAL : Observe the safety and cleanliness recommendations .

CAUTION : Depending on the vehicle, use the method that is most appropriate.

1. Tooling

Equipment : station for draining and filling fuel tanks (see garage equipement catalogue).

tool	Reference	Designation
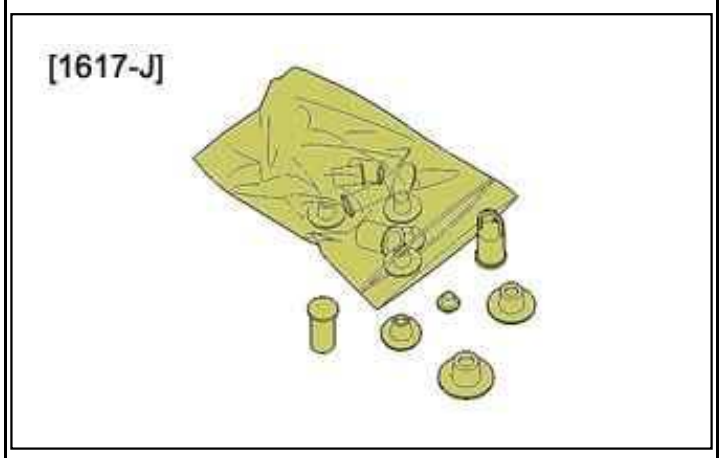 Figure : E5AB0FMT	[1617-J]	Set of plugs HDI
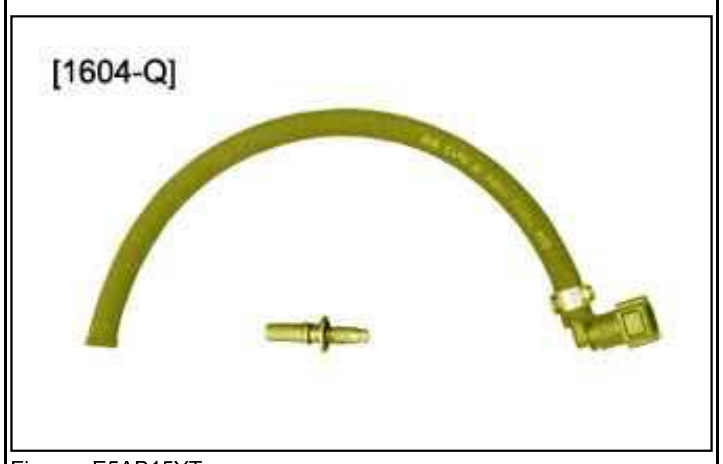 Figure : E5AB15YT	[1604-Q]	8 mm diameter union for low pressure take-off

2. Draining the fuel tank via the filler neck

CAUTION : Make sure you will observe the operating instructions of the drain unit.

CAUTION : Use a clean receptacle to collect the fuel.

2.1. Draining the fuel tank

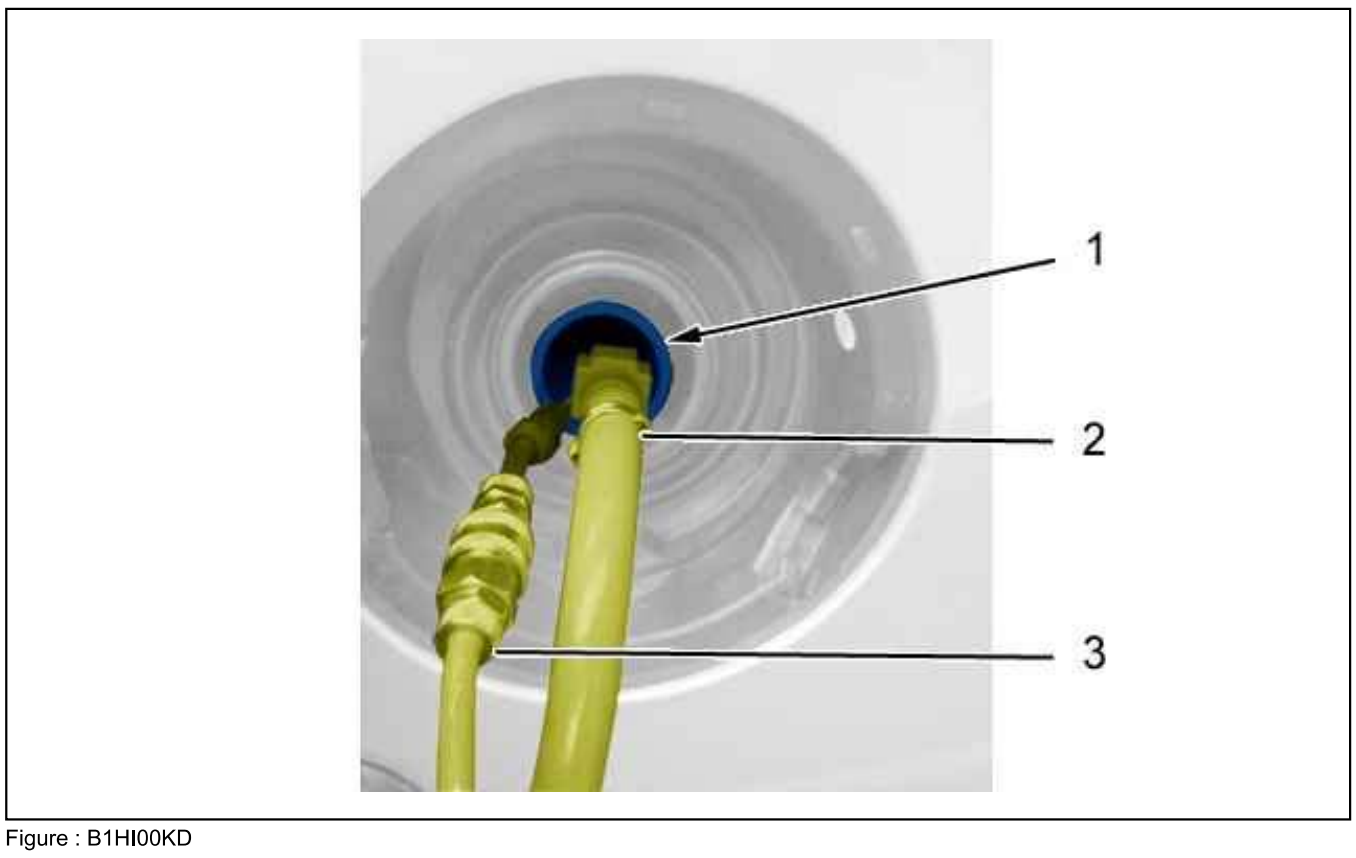

Figure : B1HI00KD

CAUTION : This operation should be carried out with the ignition switched off in order not to interfere with the functioning of the fuel gauge.

Connect plunger pipe (1) to suction pipe (2).

Position suction pipe (2) in fuel tank filler neck .
Couple up The fuel vapour re-induction pipe (3).
Suction the fuel ; Using the equipment .
Uncouple The fuel vapour re-induction pipe (3).
Remove the suction pipe (2) from the fuel tank filler neck (1).
Disconnect plunger pipe (1) from suction pipe (2).

2.2. Fuel filling

CAUTION : If the fuel recovered is polluted, use the strainer when filling.

Fill the tank ; Using the equipment .

3. Draining the fuel tank through the opening of the fuel pump and gauge assembly

3.1. Draining the fuel tank

CAUTION : Protect the vehicle’s carpets and seats.

ESSENTIAL : Open the vehicle’s windows and doors while draining the fuel tank.

Remove the fuel pump gauge module .

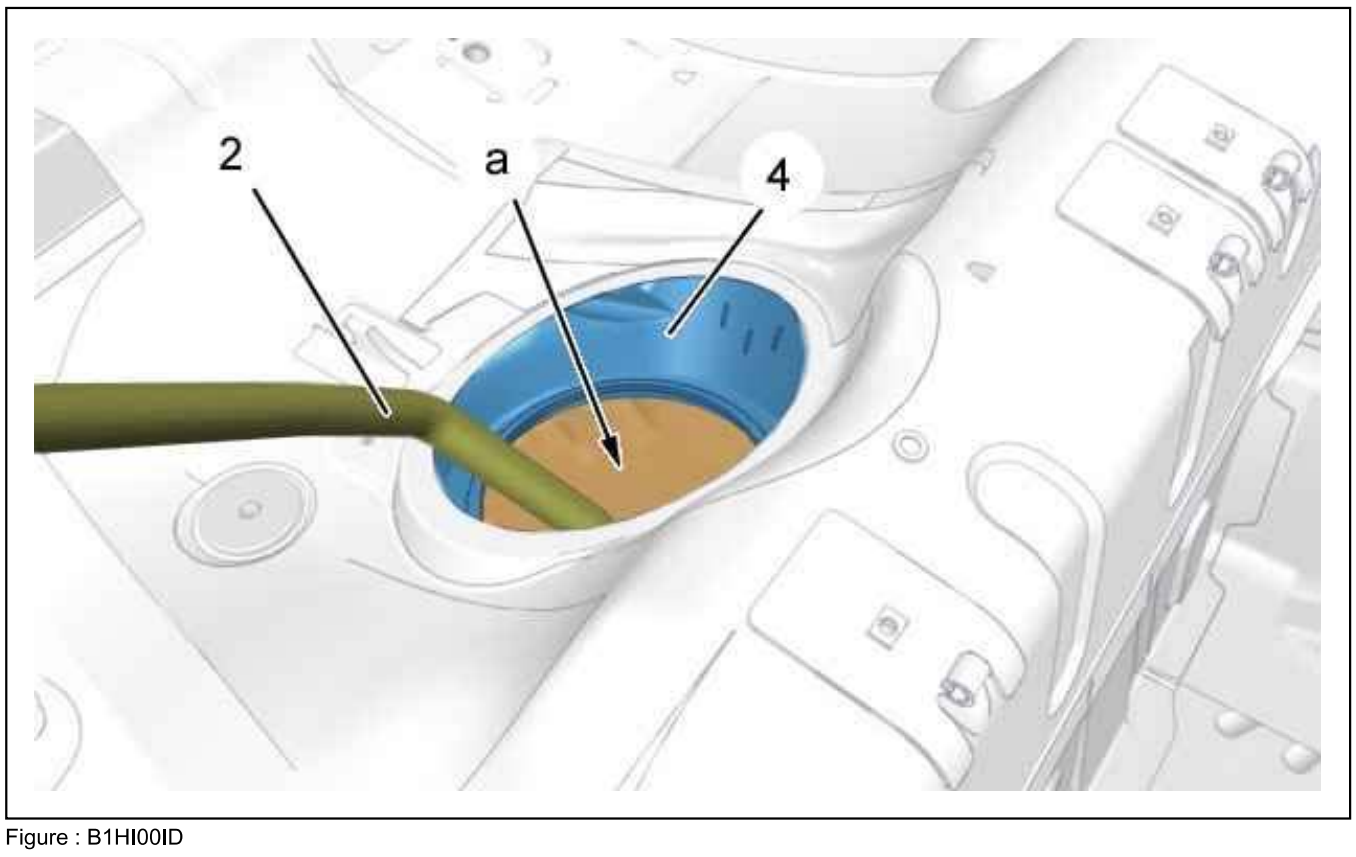

Figure : B1HI00ID

ESSENTIAL : Suction the fuel vapours from the pipe (3) ; Connect the vehicle to an approved gas extractor for this type of operation.

Position the suction pipe (2) via the opening of the fuel pump gauge module (at "a").
Drain the fuel tank (4) ; Using the equipment .

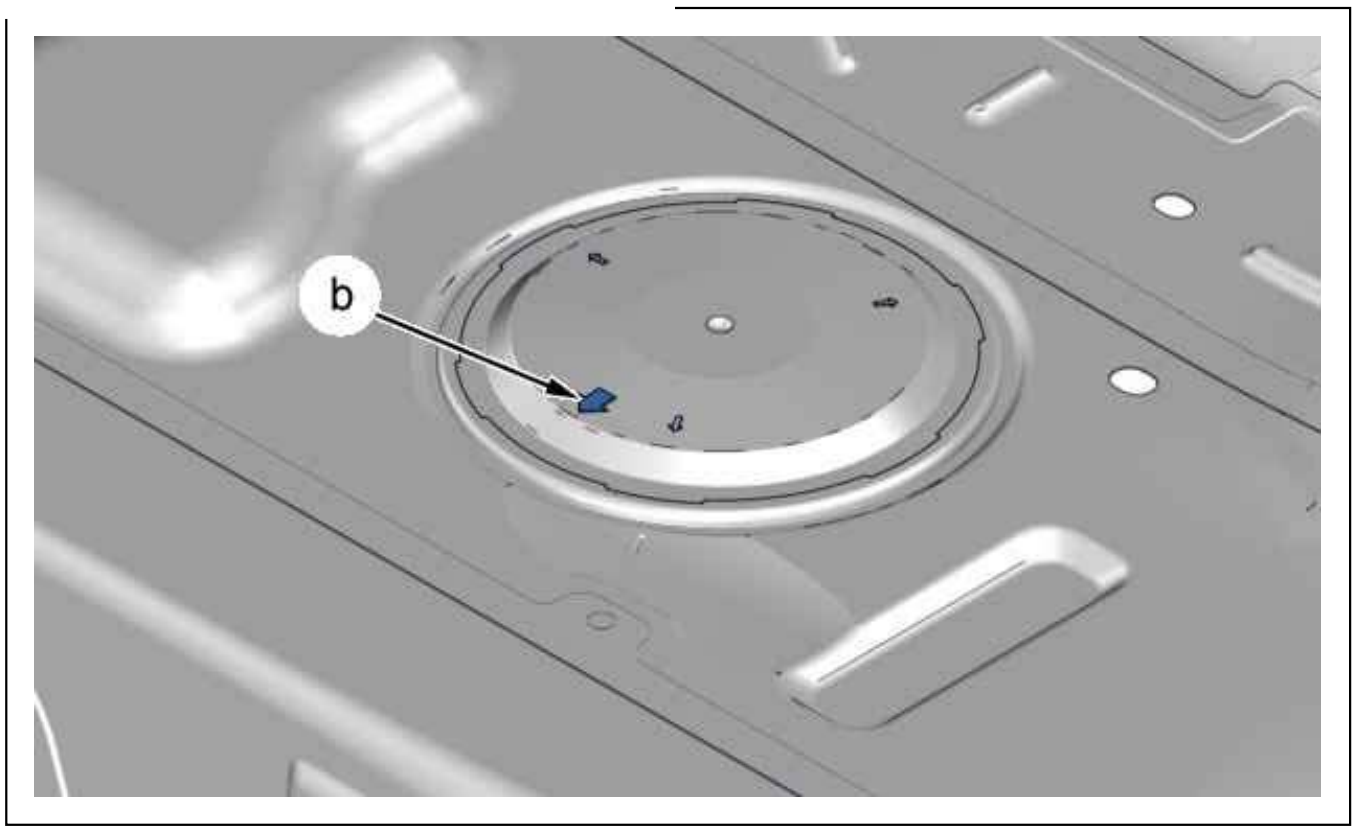

Figure : B1HI00UD

CAUTION : Repositioning of the access cap to the fuel pump-gauge assembly Towards the front of the vehicle (following the arrow) (at "b").

Refit the fuel gauge and pump assembly.

3.2. Special features of vehicles fitted with a two-compartment fuel tank

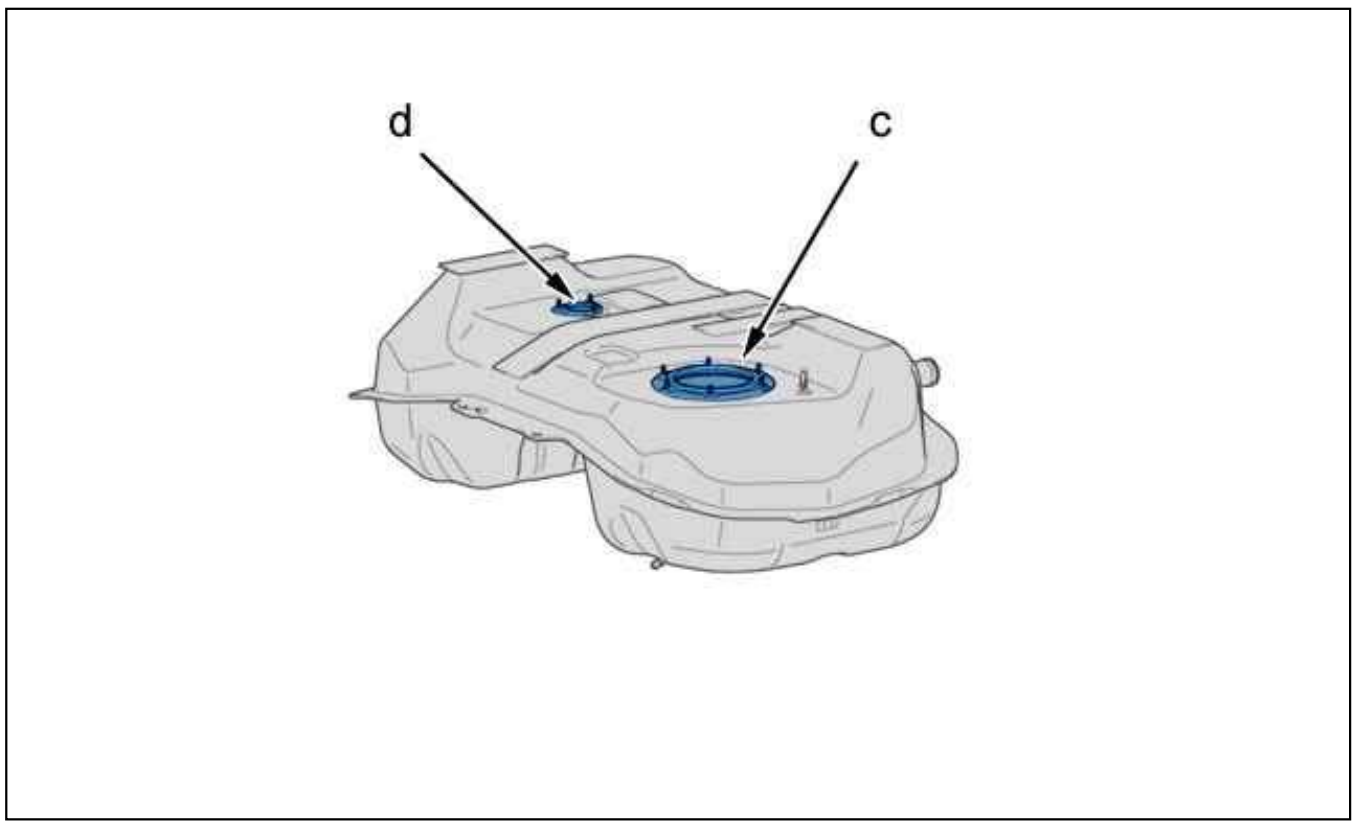

Figure : B1HI00VD

For certain vehicles, the 2 compartments of the fuel tank must be drained.
Remove the fuel pump gauge module .
Drain the reservoir (at "c", "d") ; Using the equipment .
Refit the 2 fuel pump/gauge module assemblies.

3.3. Fuel filling

CAUTION : If the fuel recovered is polluted, use the strainer when filling.

Fill the tank ; Using the equipment .

4. Draining the fuel tank via the injection rail supply (petrol)

4.1. Draining the fuel tank

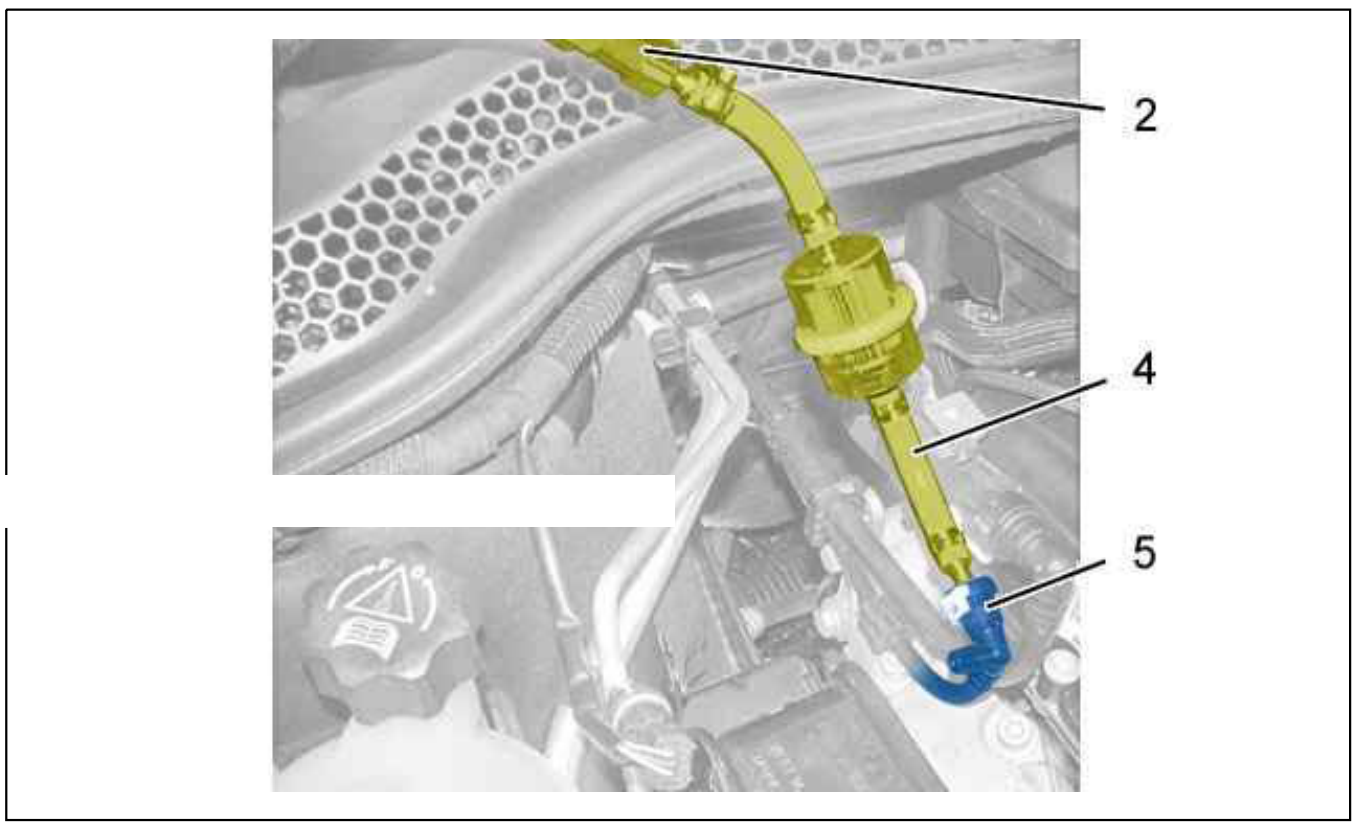

Figure : B1HI00LD

CAUTION : Drop the pressure in the fuel supply circuit.

Disconnect fuel injection rail supply hose (5) from the fuel injection rail.
Connect suction pipe (2) to union (4).
Connect union (4) to fuel injection rail supply hose (5).
Suction the fuel ; Using the equipment .
Disconnect union (4) from fuel injection rail supply hose (5).
Disconnect suction pipe (2) from union (4).
Connect fuel injection rail supply hose (5) to the fuel injection rail.

4.2. Fuel filling

CAUTION : If the fuel recovered is polluted, use the strainer when filling.

Fill the tank ; Using the equipment .

5. Draining the fuel tank by supplying the fuel high-pressure pump (engine 4N13)

5.1. Draining the fuel tank

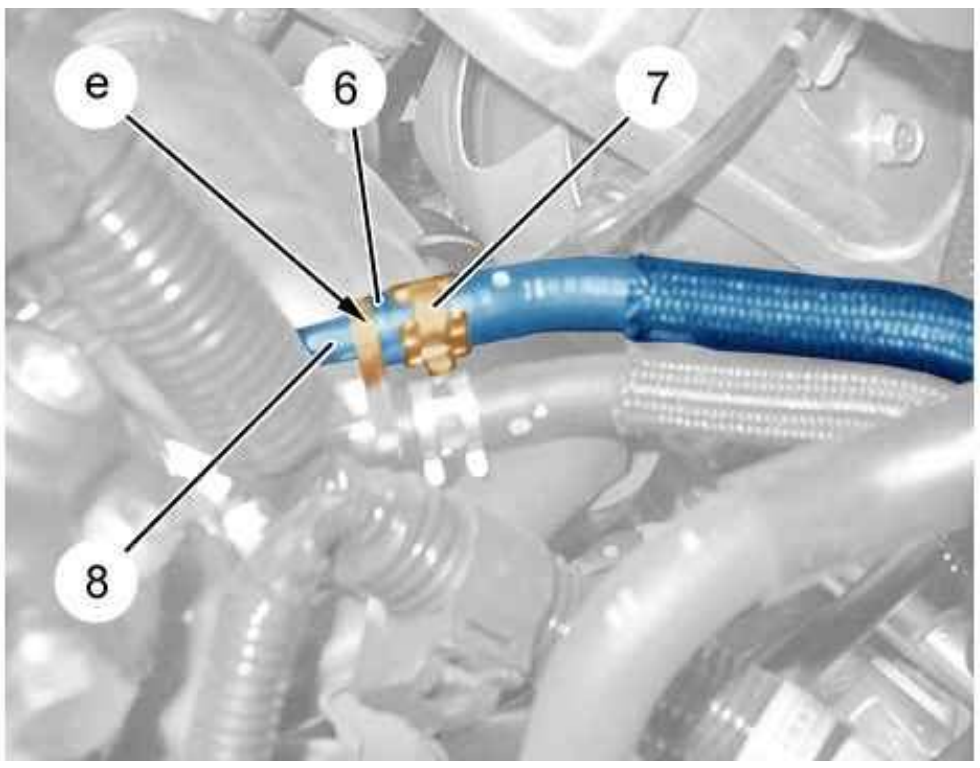

Figure : B1HI00WD

Remove the air filter housing .
Protect the surrounding area from any spray of fuel.
Push back the collar (7).
Uncouple the fuel supply pipe (6) (at "e").
Connect hose (6) to the end of the tool [1604-Q].
Put the clip (7) in place.
Block the pipe (8) ; Using tool [1617-J].

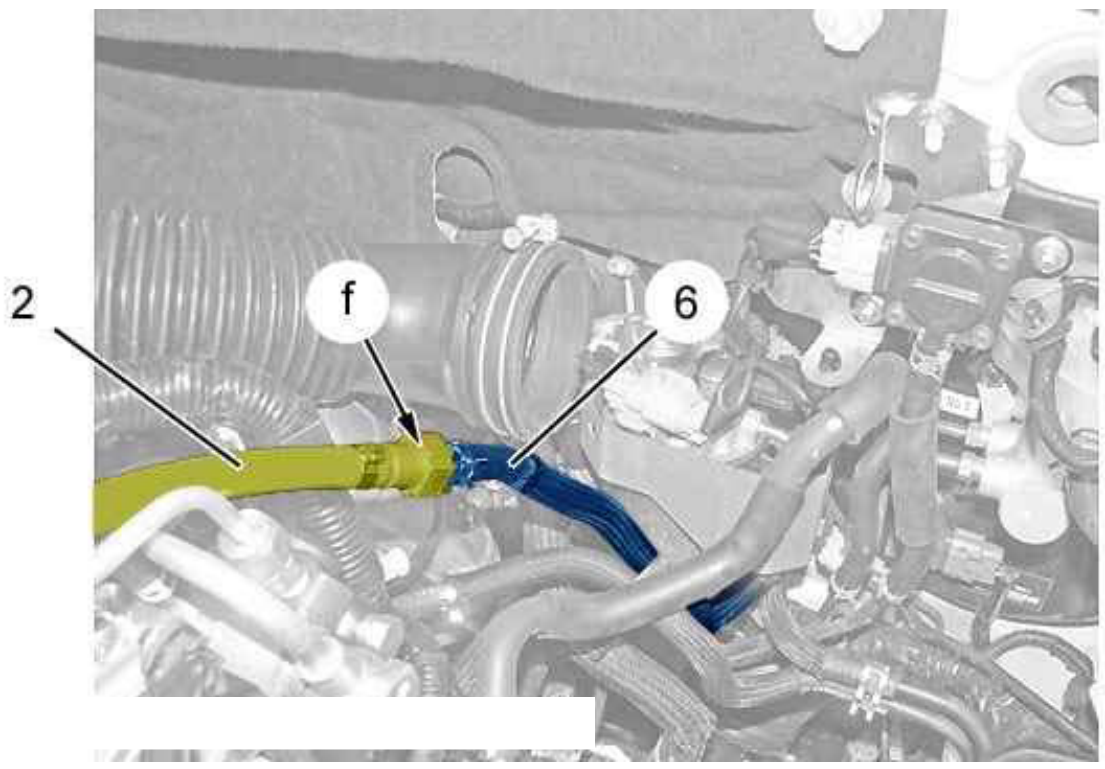

Figure : B1HI00XD

Connect suction pipe (2) to fuel supply hose (6) (at "f").
Suction the fuel ; Using the equipment .
Disconnect suction pipe (2) from fuel supply hose (6) (at "f").
Remove the tool [1617-J] from the pipe (8).
Push back the collar (7).
Disconnect hose (6) from the end of the tool [1604-Q].
Connect the fuel supply pipe (6) (at "f").
Put the clip (7) in place.
Refit the air filter housing .

5.2. Fuel filling

CAUTION : If the fuel recovered is polluted, use the strainer when filling.

Fill the tank ; Using the equipment .

6. Draining the fuel tank (DV6C, DV6D, DV6E, DV6UC, DV6CM, DV6DM, DV6DUM et DV6EM et DV4C version)

6.1. Draining the fuel tank

Protect the surrounding area from any spray of fuel.
Uncouple the fuel supply pipe (Fuel filter outlet).

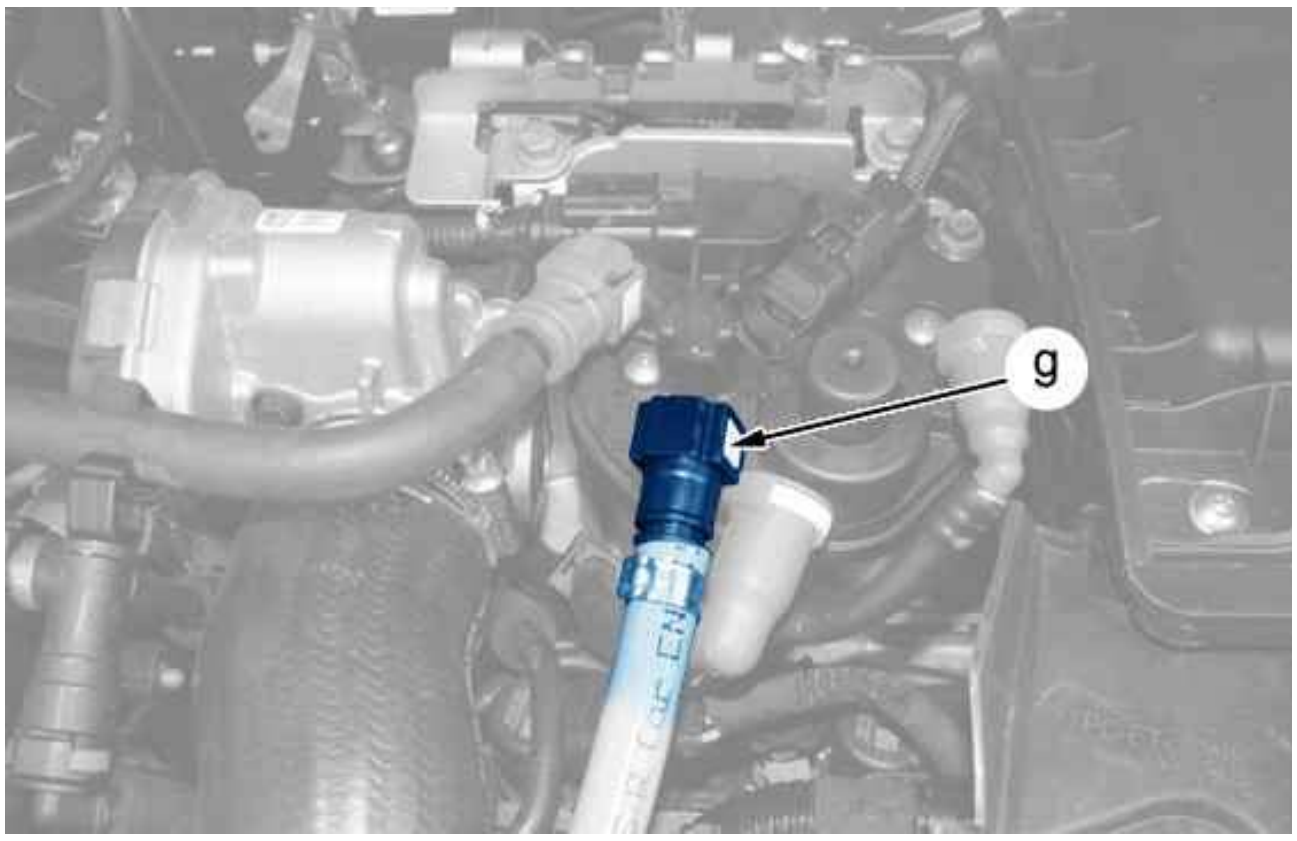

Figure : B1HI00YD

Couple up the filling station click-fit union (at "g").
Suction the fuel ; Using the equipment .
Uncouple the filling station click-fit union (at "g").
Connect the fuel supply pipe .

6.2. Fuel filling

CAUTION : If the fuel recovered is polluted, use the strainer when filling.

Fill the tank ; Using the equipment .

7. Special features of vehicles fitted with a particle filter

CAUTION : The fuel recovered is not compatible with engine versions that do not have particle filters.

The fuel which is retrieved contains an additive for particulate emission filter requirements.
The quantity of additive injected into the fuel tank corresponds to the quantity of fuel and is defined by the fuel additive adding ECU.
Put back all of the fuel recovered.
If the fuel taken during the draining operation is not re-usable (water or impurities present), proceed as follows :

- Place the cap on the fuel tank
- Switch on the ignition for 5 seconds (minimum)
- Switch off the ignition
- Remove the plug
- Refill the tank

N.B. : This operation enables the fuel additive adding ECU to inject the quantity of additive corresponding to the quantity of diesel added.

CLEANING : FUEL HIGH PRESSURE COMMON INJECTION RAIL UNIONS

ESSENTIAL : Observe the safety and cleanliness recommendations .

1. Tooling

Equipment :

- Degreasing product (type SODIMAC)
- Brush
- Cleaning tray
- Vacuum extractor
- Round end-piece

2. Preliminary operations

ESSENTIAL : Respect the safety and cleanliness recommendations that are specific to high pressure diesel injection (HDi) engines .

Disconnect the battery negative terminal.
Protect the alternator.

3. Method of operation

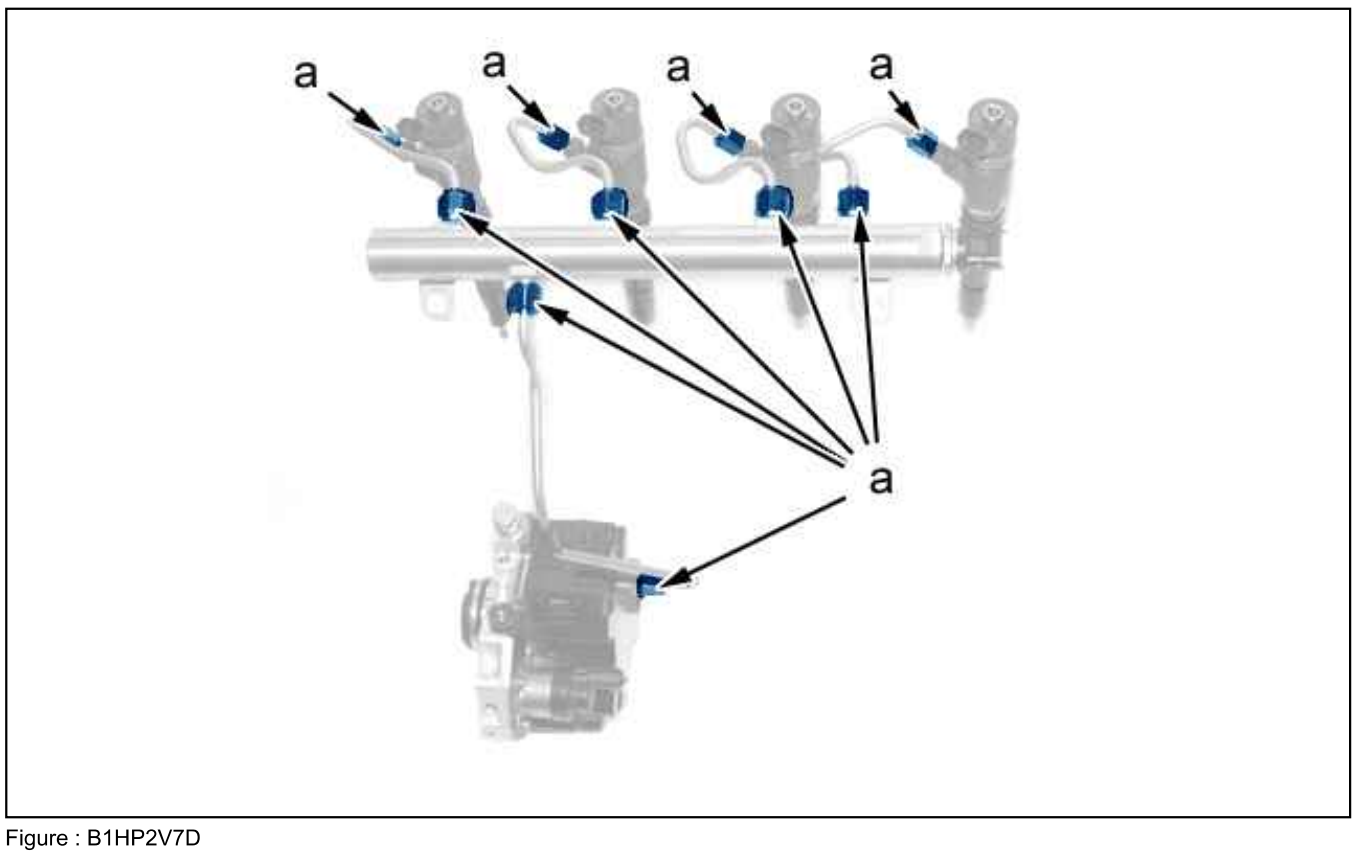

Figure : B1HP2V7D

Clean the repair areas (as "a") :

- Dip the brush in the degreasing product
- Clean the zones "a" while using the suction device at the same time ; Using a suction device fitted with a round adaptor

Clean the suction device after use.
Remove the alternator protector.

CAUTION : Perform the operations to be carried out following reconnection of the battery.

Reconnect the battery.

TECHNICAL NOTE : ADDITIVES FOR PARTICLE FILTER

This document describes the after-sales maintenance operations that follow from the changes in the particle filter additives.

CAUTION : This document concerns filling of the rigid reservoir only. The additive must be used only on the vehicles that have a particle filter.

1. The new 3rd generation particle filter additives

Suppliers and brands :

- RHODIA : EOLYS POWERFLEX
- INFINEUM : F7995

2. Previous type of additive

Additive DPX 42 is still available and must be used for all servicing on vehicles that have DPX 42.
The EOLYS 176 additive is replaced by the INFINEUM F7995 additive. When current stocks are exhausted, only the new product will be supplied.

3. Compatibility between additives

Additive DPX42 cannot be mixed with any other additive.
Additives EOLYS POWERFLEX and INFINEUM F7995 cannot be mixed with each other.

N.B. : The different generations of additive do not affect the calibrations of the engine management ECU.

CAUTION : It is not permissible to mix additives INFINEUM F7995 and Rhodia EOLYS POWERFLEX with each other.

4. Filling or topping up with additive

Conversion chart for filling or topping-up operations		
Additive present in the vehicle	Colour of clickfit on filler interface	Additive to be used in all operations
DPX 42	Click-fit neither blue nor green	DPX 42
EOLYS 176	Green clickfit	EOLYS 176 - INFINEUM F7995
INFINEUM F7995	Green clickfit	INFINEUM F7995
EOLYS POWERFLEX	Blue clickfit	EOLYS POWERFLEX

REMOVING - REFITTING : EXHAUST GAS PRESSURE SENSOR PRESSURE TAKE-OFF

ESSENTIAL : Observe the safety and cleanliness recommendations .

CAUTION : Before disconnecting the battery, partially open the door windows.

1. Recommended tools

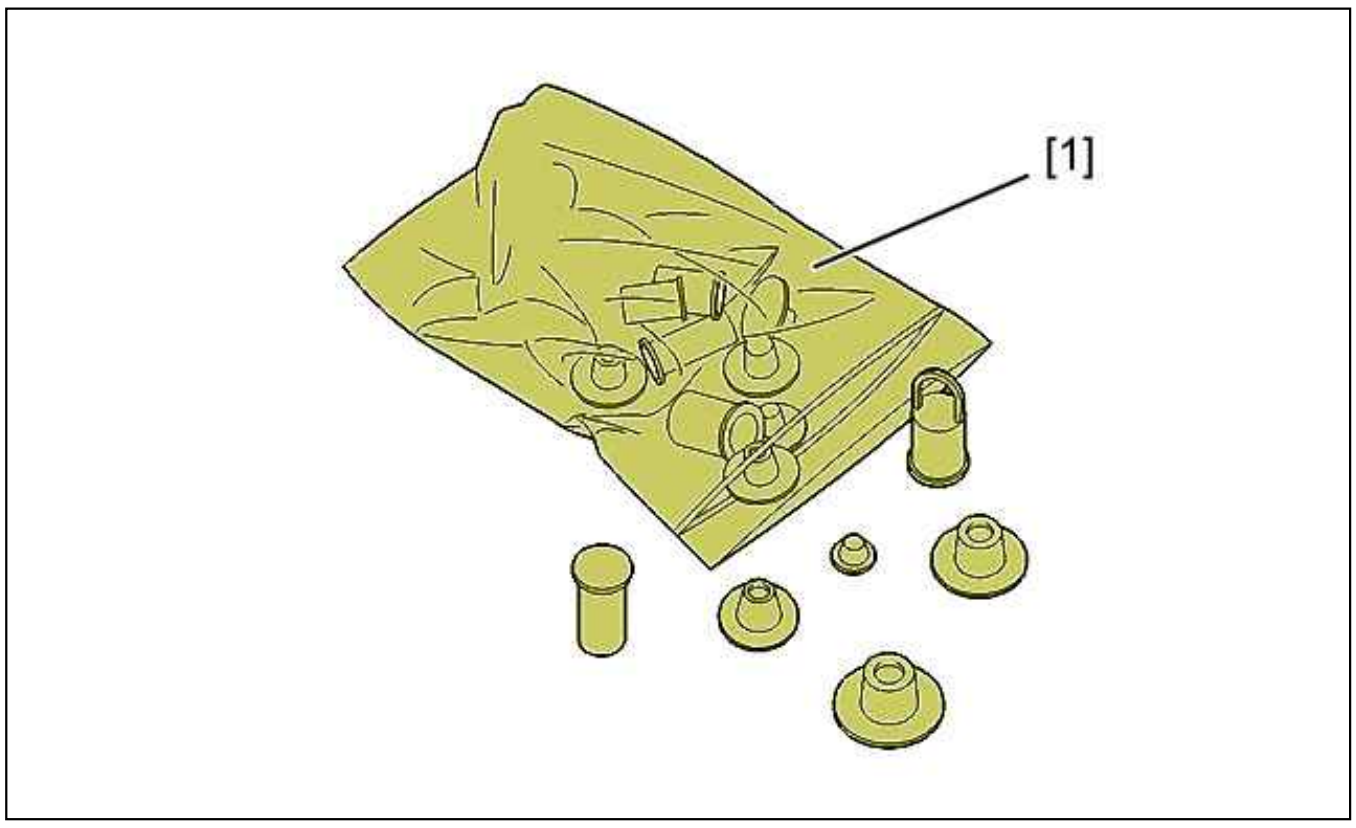

Figure : E5AP2VFD

[1] Set of plugs (-).0188.T.

2. Removing

ESSENTIAL : Respect the safety and cleanliness recommendations that are specific to high pressure diesel injection (HDi) engines.

Put the vehicle on a hoist.
Disconnect the battery.

CAUTION : Wait at least one hour before carrying out any work on the exhaust line.

Raise the vehicle.
Remove the under engine protection .

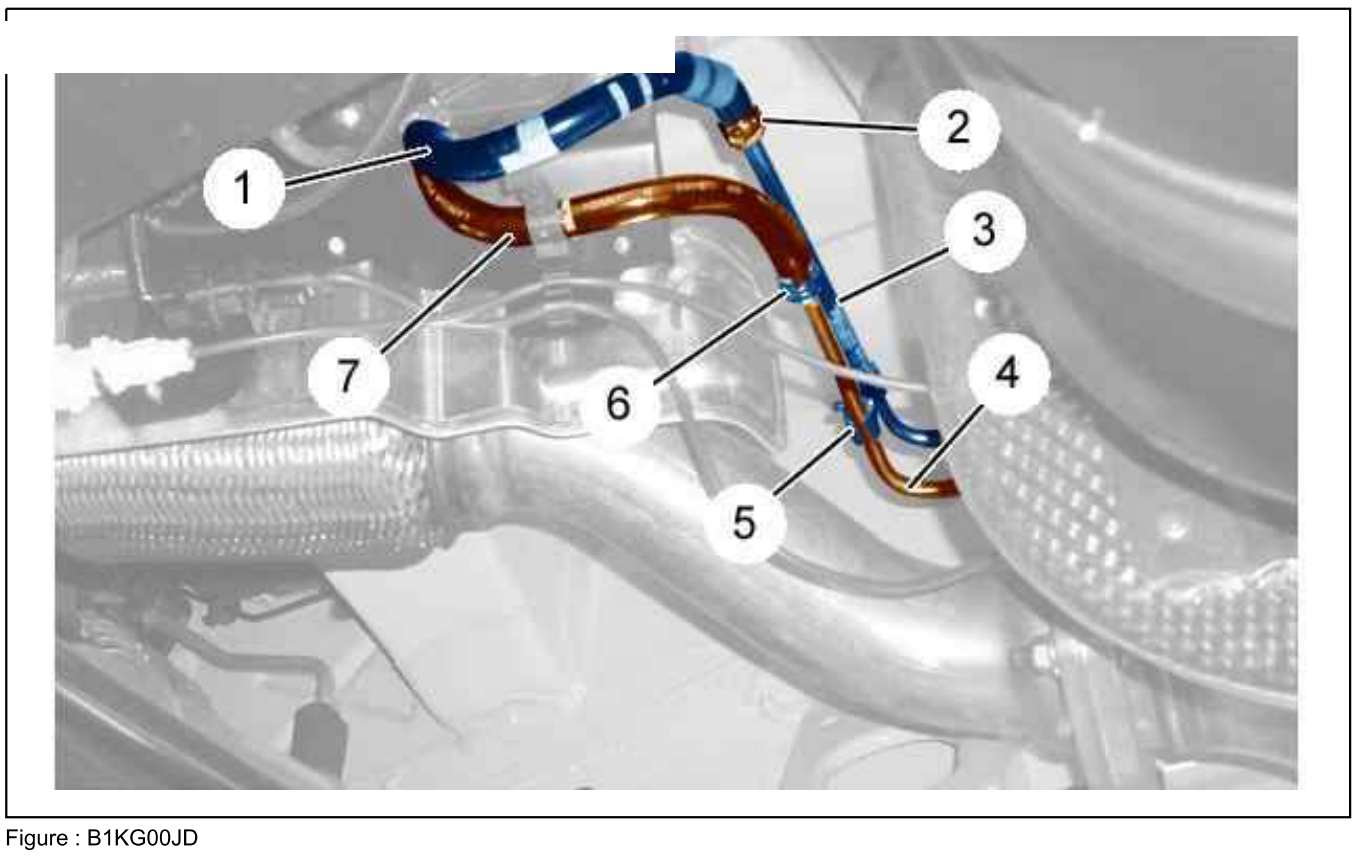

Figure : B1KG00JD

Remove : The u bolt (5).

CAUTION : Mark the pipes (1), (7) in relation to the particle emission filter pressure take-offs (3), (4).

Release the clips (2) and (6).
Uncouple the pipes (1) and (7) from the pressure take-offs (3) and (4).

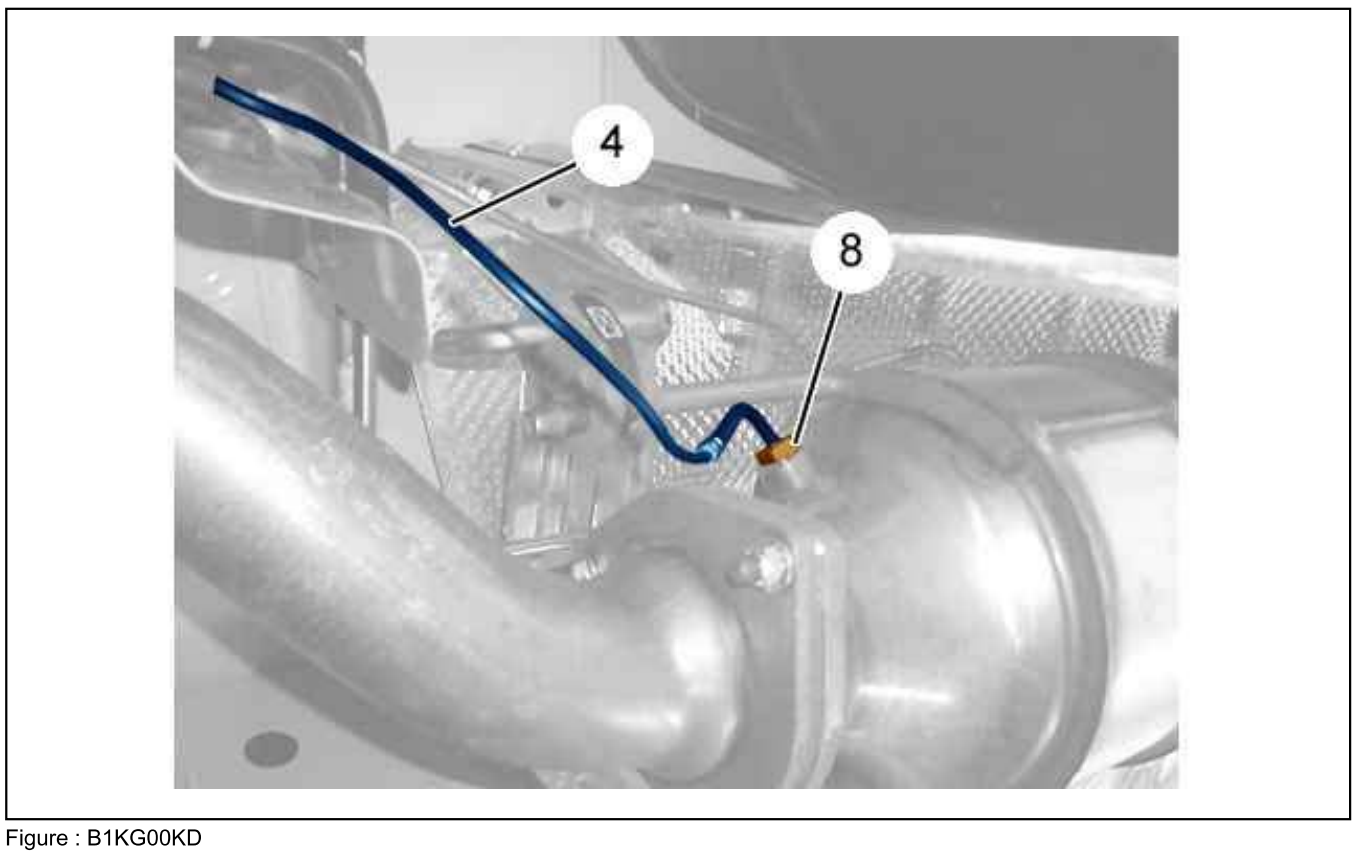

Figure : B1KG00KD

Unscrew : The union (8) of the upstream pressure take-off (4).
Remove : The upstream pressure take-off (4).

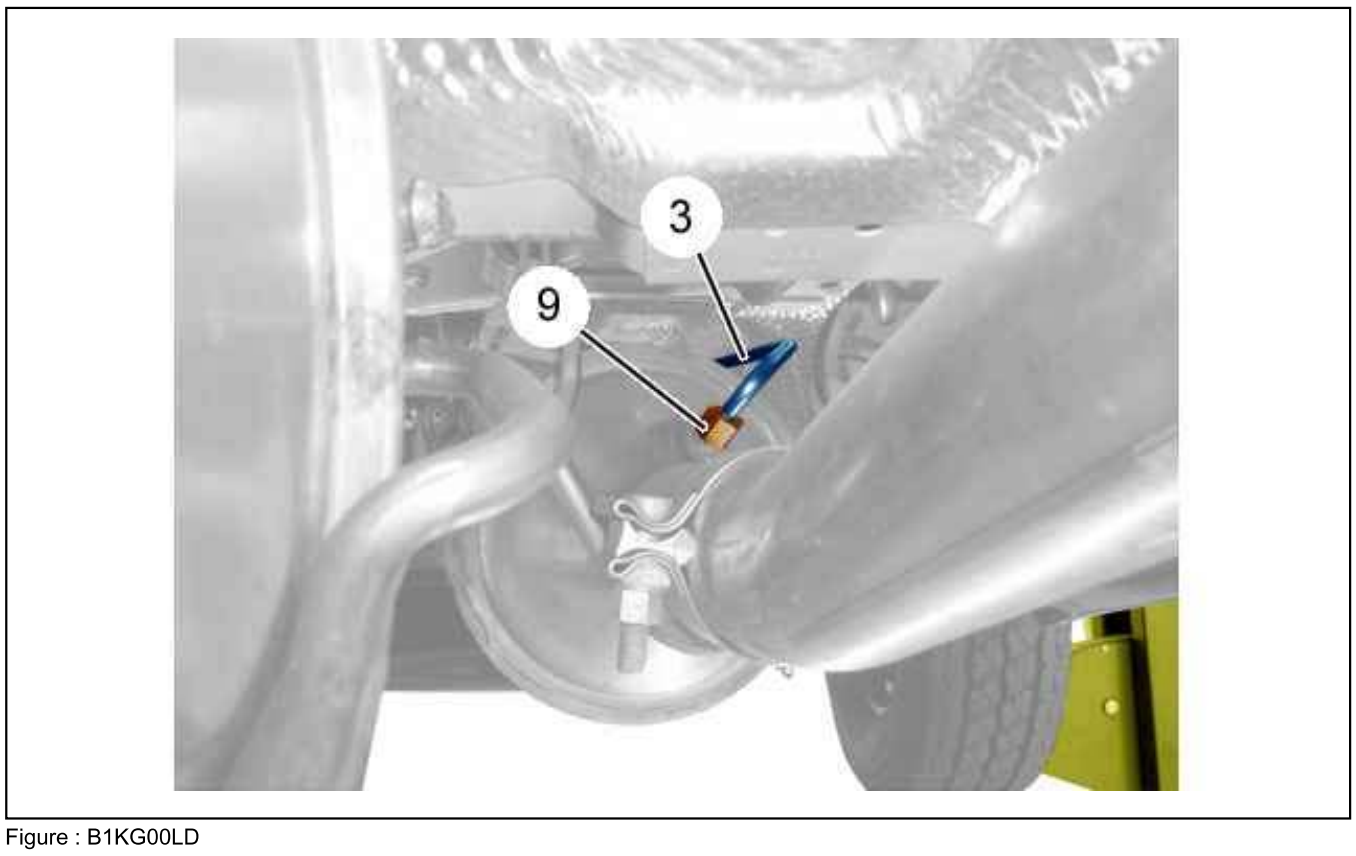

Figure : B1KG00LD

Unscrew : The union (9) of the downstream pressure take-off (3).

3. Refitting

CAUTION : Adhere to the tightening torques .

Refit :

- The upstream pressure take-off (4) ; Do up the union (8)
- The downstream pressure take-off (3) ; Do up the union (9)

Couple up the pipes (1) and (7) on the pressure take-offs (3) and (4).
Clip : The collars (2) and (6).
Refit :

- The u bolt (5)
- The protective panel under the engine

Reconnect the battery.

REMOVING - REFITTING : EXHAUST GAS PRESSURE SENSOR PRESSURE TAKE-OFF

ESSENTIAL : Observe the safety and cleanliness recommendations .

CAUTION : Before disconnecting the battery, partially open the door windows.

1. Recommended tools

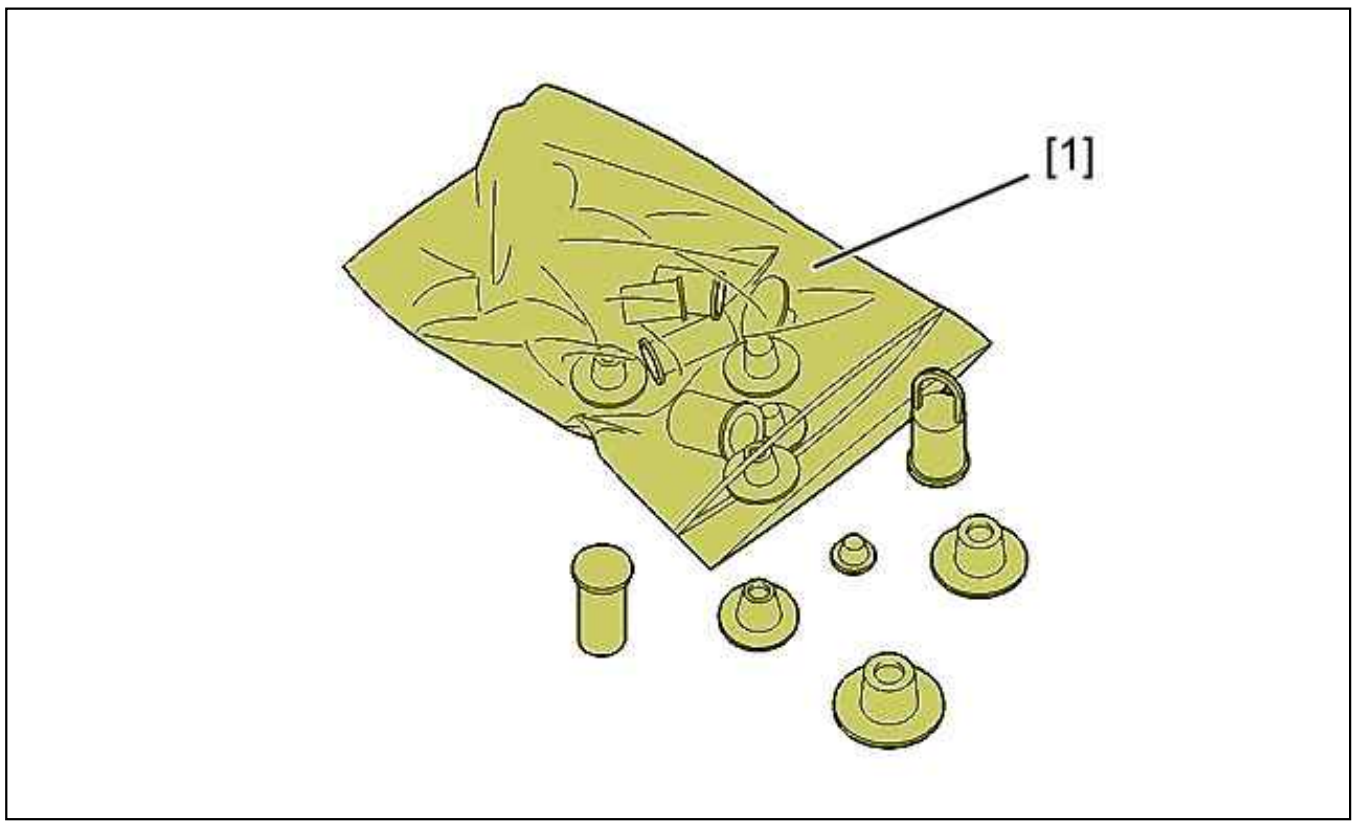

Figure : E5AP2VFD

[1] Set of plugs (-).0188.T.

2. Removing

ESSENTIAL : Respect the safety and cleanliness recommendations that are specific to high pressure diesel injection (HDi) engines.

Put the vehicle on a hoist.
Disconnect the battery.

CAUTION : Wait at least one hour before carrying out any work on the exhaust line.

Raise the vehicle.
Remove the under engine protection .

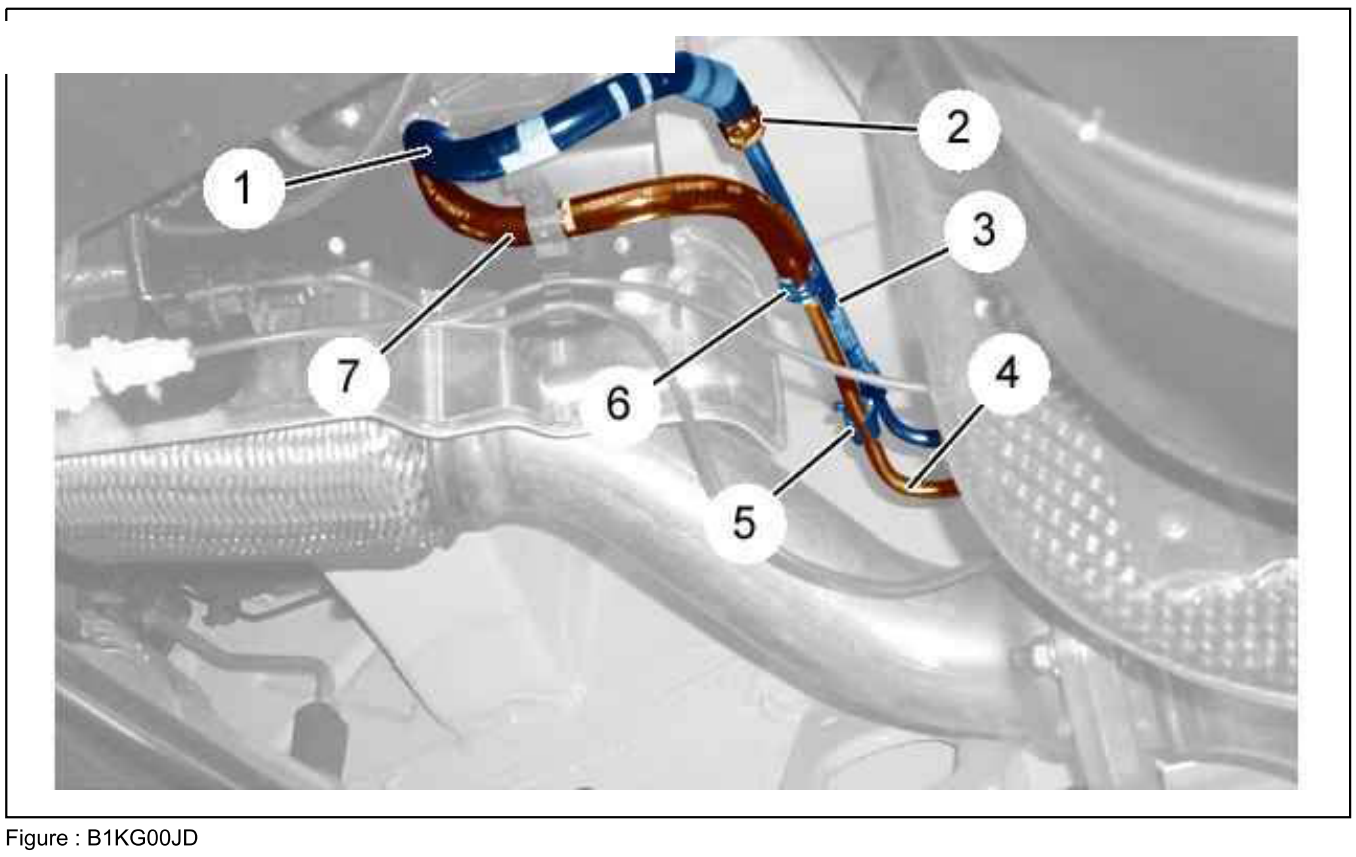

Figure : B1KG00JD

Remove : The u bolt (5).

CAUTION : Mark the pipes (1), (7) in relation to the particle emission filter pressure take-offs (3), (4).

Release the clips (2) and (6).
Uncouple the pipes (1) and (7) from the pressure take-offs (3) and (4).

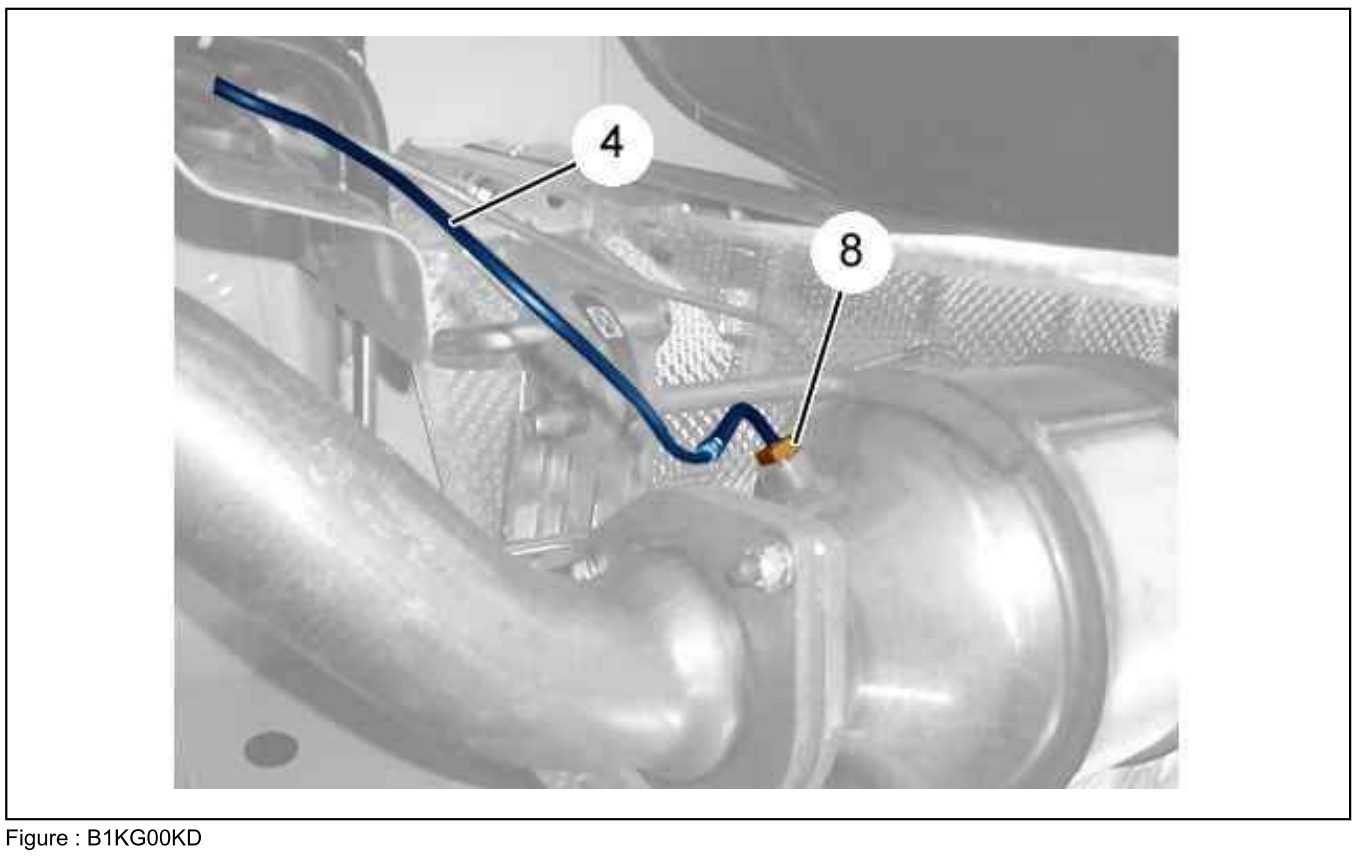

Figure : B1KG00KD

Unscrew : The union (8) of the upstream pressure take-off (4).
Remove : The upstream pressure take-off (4).

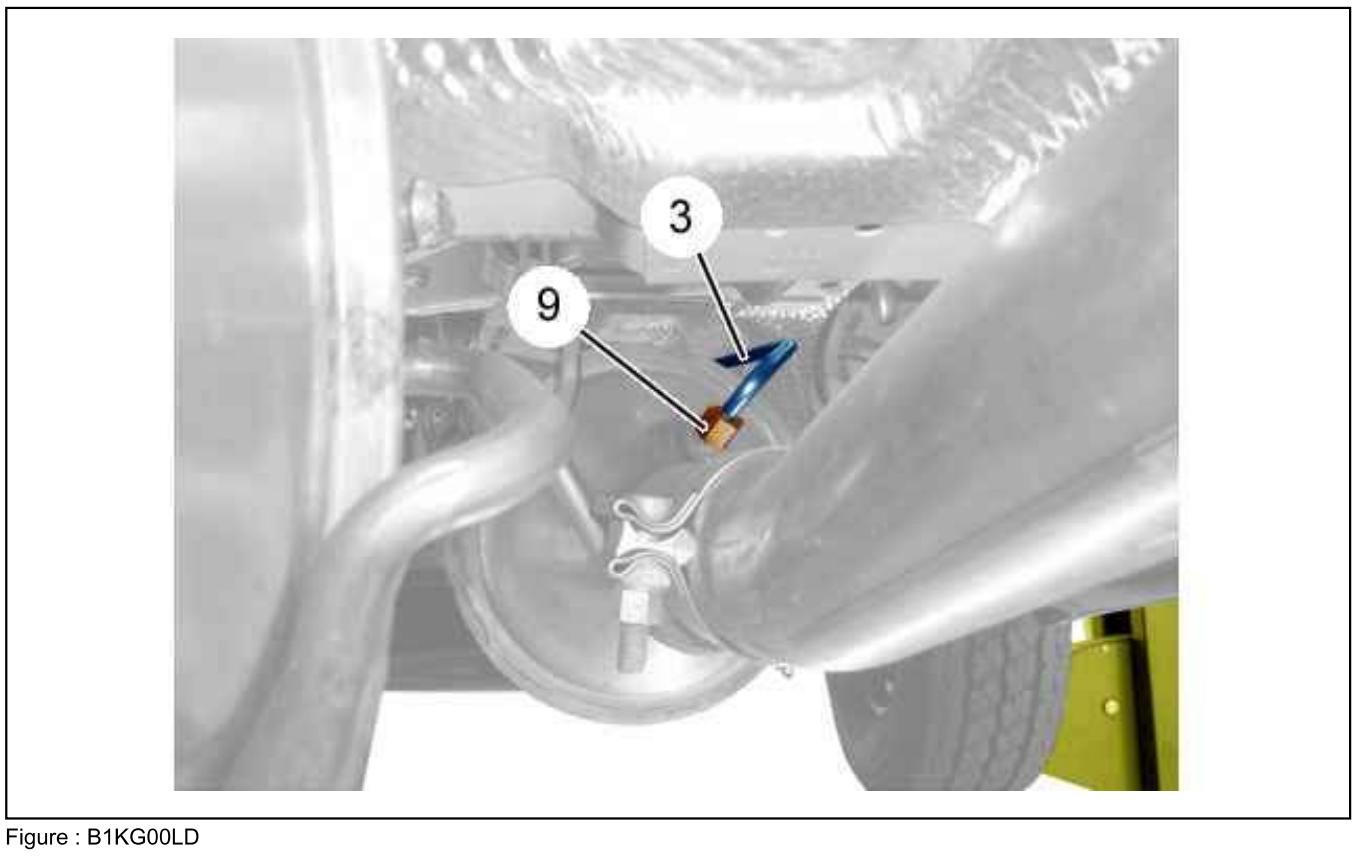

Figure : B1KG00LD

Unscrew : The union (9) of the downstream pressure take-off (3).

3. Refitting

CAUTION : Adhere to the tightening torques .

Refit :

- The upstream pressure take-off (4) ; Do up the union (8)
- The downstream pressure take-off (3) ; Do up the union (9)

Couple up the pipes (1) and (7) on the pressure take-offs (3) and (4).
Clip : The collars (2) and (6).
Refit :

- The u bolt (5)
- The protective panel under the engine

Reconnect the battery.

REMOVING - REFITTING : PARTICLE FILTER

ESSENTIAL : Observe the safety and cleanliness recommendations .

1. Tooling

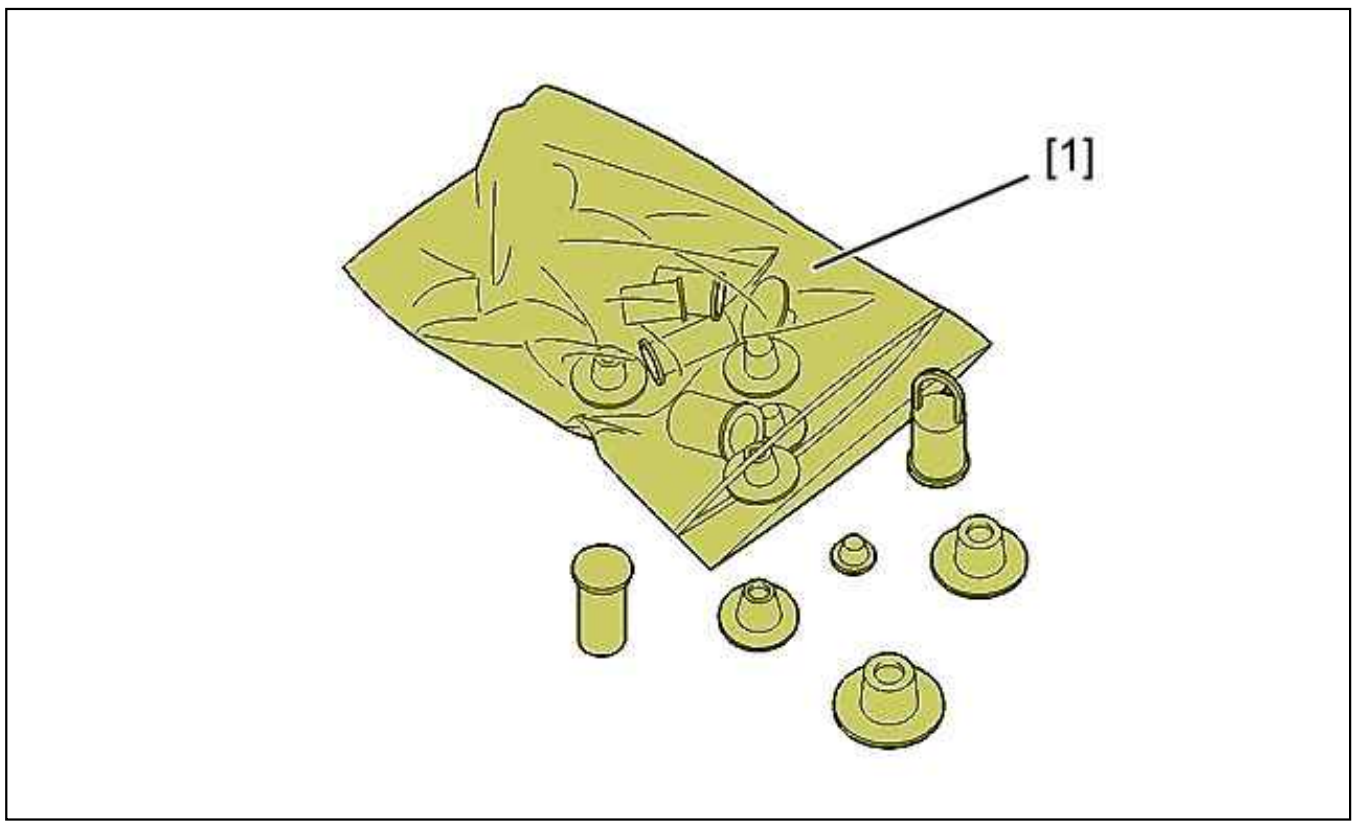

Figure : E5AP2VFD

[1] Set of plugs (-).0188.T.

2. Removing

Put the vehicle on a hoist.

CAUTION : Wait at least one hour before carrying out any work on the exhaust line.

Disconnect the battery.
Raise the vehicle.
Remove the under engine protection .

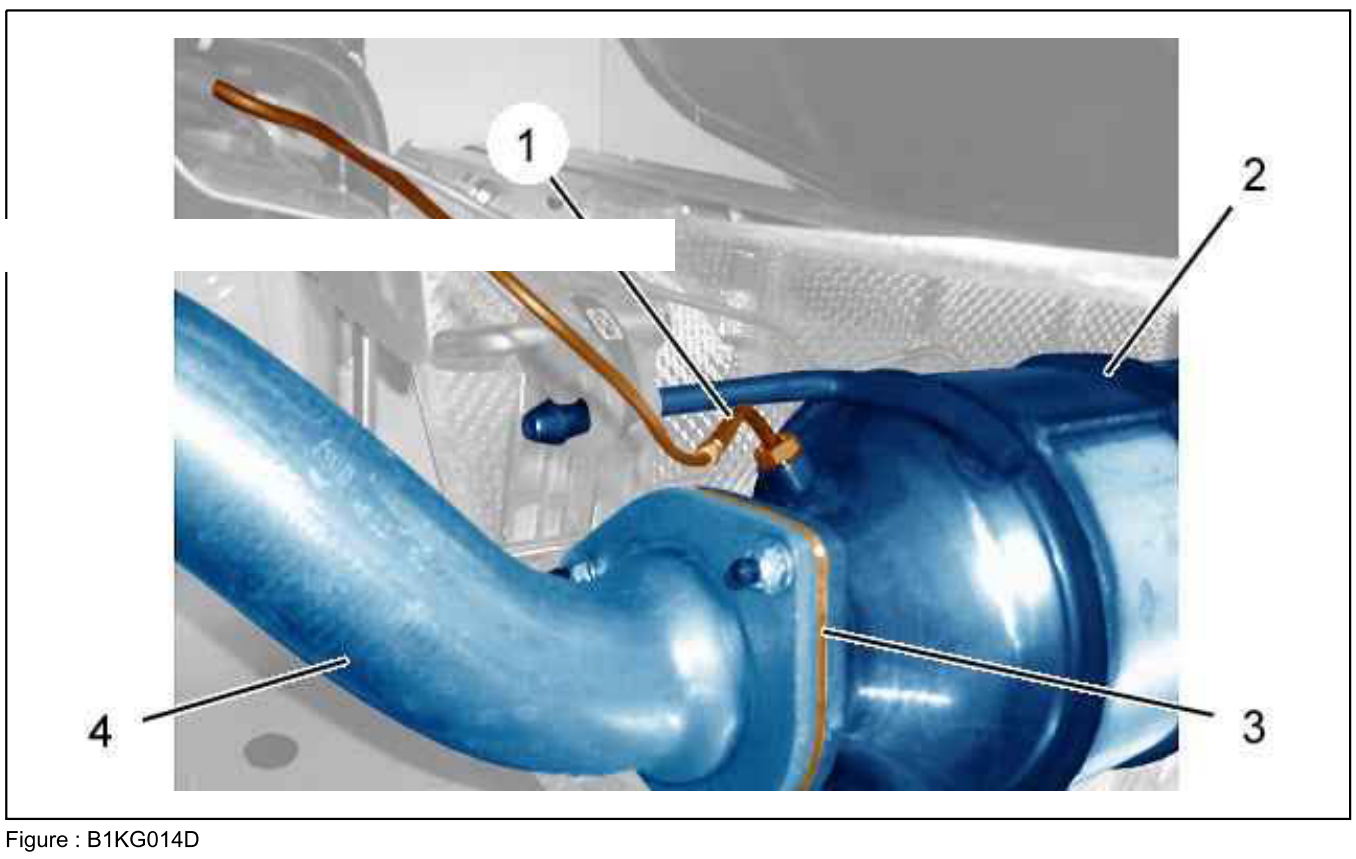

Figure : B1KG014D

Uncouple the exhaust gas pressure sensor pressure take-off (1) .
Remove : The 3 exhaust clamp fixing nuts (3).
Uncouple the particle emission filter (2) from the exhaust pipe (4).

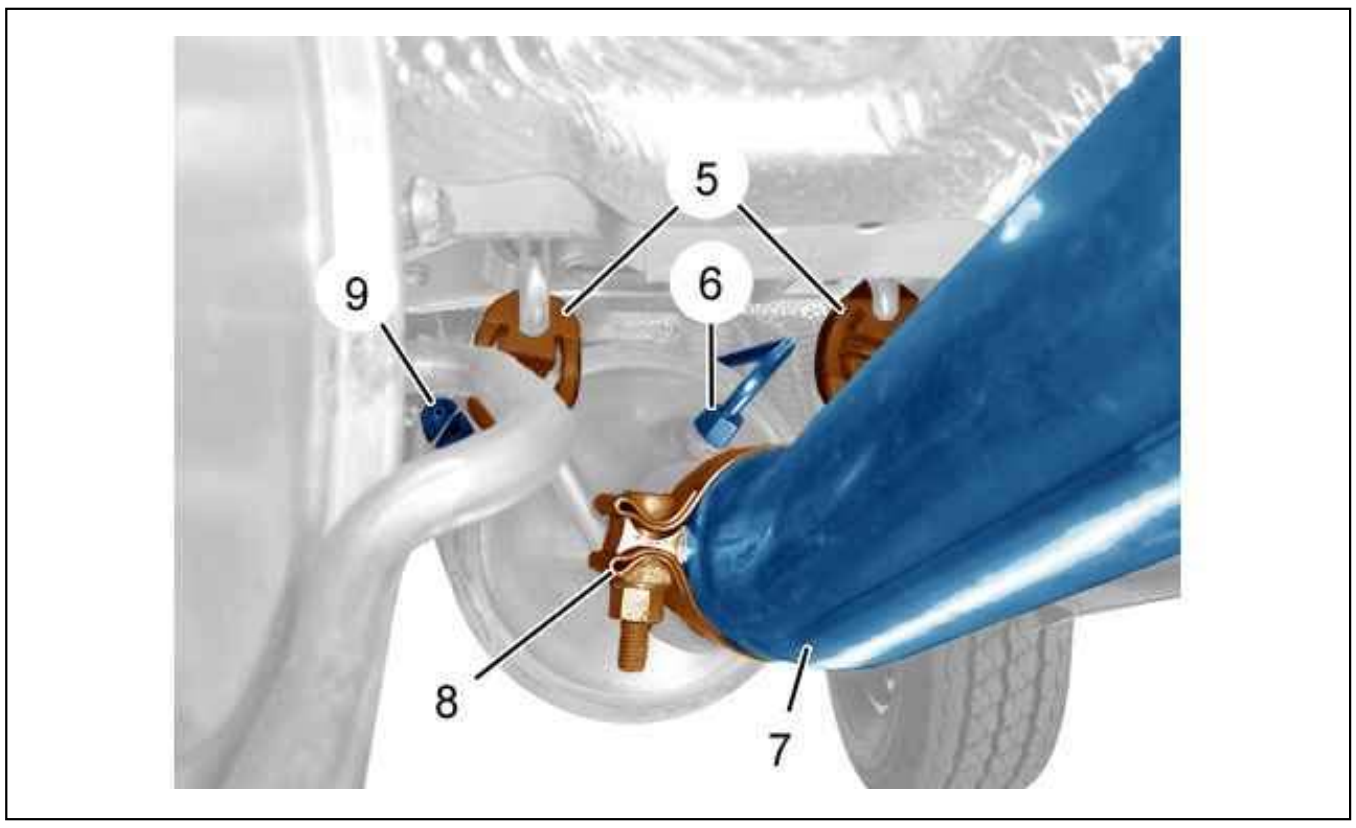

Figure : B1KG015D

Slacken the clip (8).
Uncouple : The pressure take-off (6) .
Uncouple the particle emission filter (2) from the exhaust pipe (7).
Position a lifting tool under the particle emission filter.
Uncouple :

- The temperature sensors (according to equipment)
- The particle emission filter (2) from its flexible mountings (5), (9)

Remove the particulate emission filter (2).

3. Refitting

CAUTION : Adhere to the tightening torques .

Refit the particle emission filter (2).
Recouple the particle emission filter (2) to the following components :

- The hangers (5), (9)
- The exhaust pipe (7)
- The exhaust pipe (4)

Recouple to the particle emission filter :

- The pressure take-offs (1), (6)
- The exhaust gas temperature sensors (according to equipment)

Refix :

- The bracket (3) (With a new seal)
- The clip (8)

Reconnect the battery

Check that there are no fault codes ; Using a diagnostic tool.
Refit the under-engine protection .

4. Instructions for returning the particle filter (used)

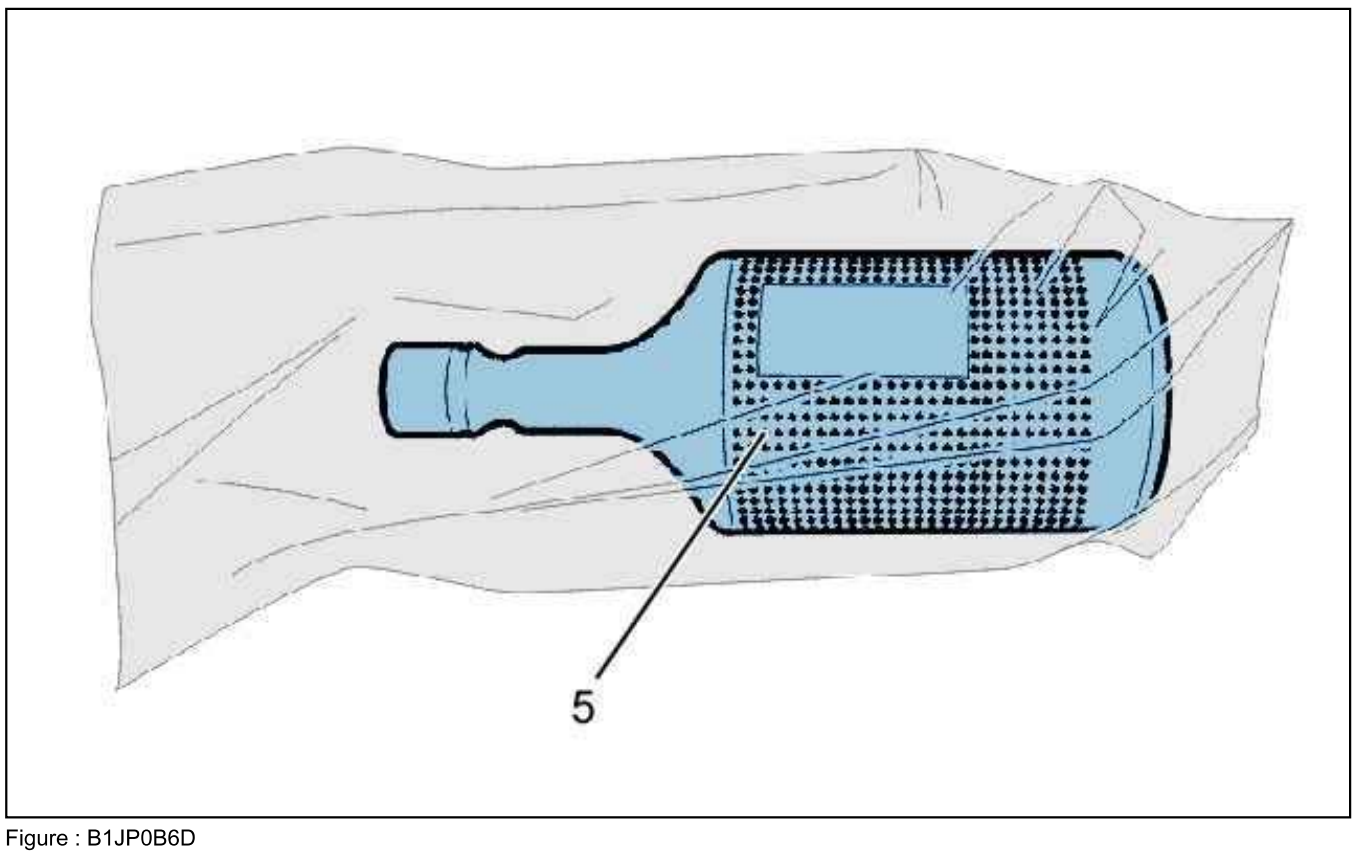

Figure : B1JP0B6D

Blank the particle filter orifices with the plugs and cover retrieved from the new particle filter.

Put the used particle filter (5) in the bag of the new particle filter.

Place this in the original packaging.

REMOVING - REFITTING : EXHAUST GAS RECYCLING SOLENOID VALVE

ESSENTIAL : Observe the safety and cleanliness recommendations.

1. Removing

CAUTION : After switching off the ignition: wait 15 minutes before disconnecting the battery, to ensure that the initialisations of the various ECUs are memorised.

Disconnect the battery.

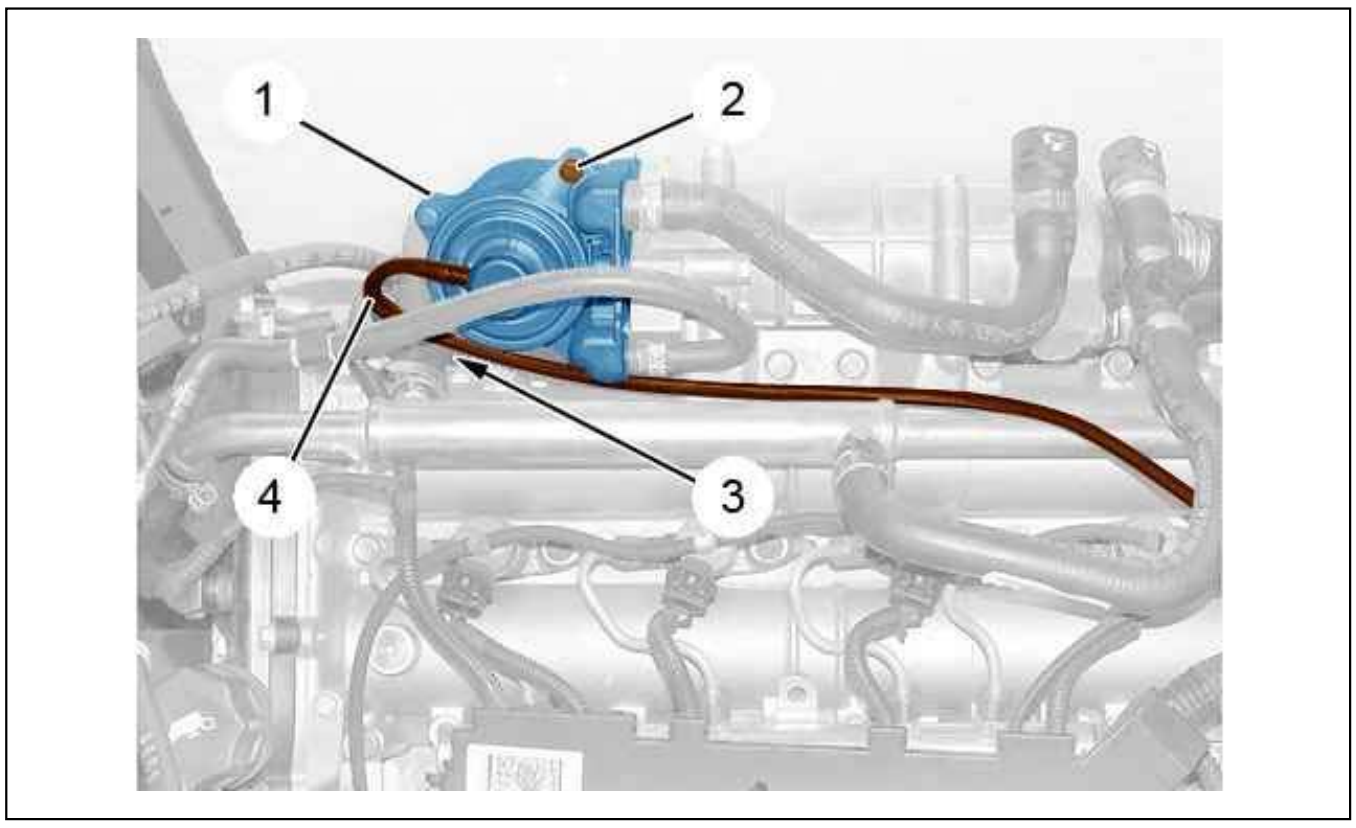

Figure : B1BPSGAD

Uncouple the pipe (4).
Remove :

- The bolts (2), (3)
- The EGR electrovalve (1)

2. Refitting

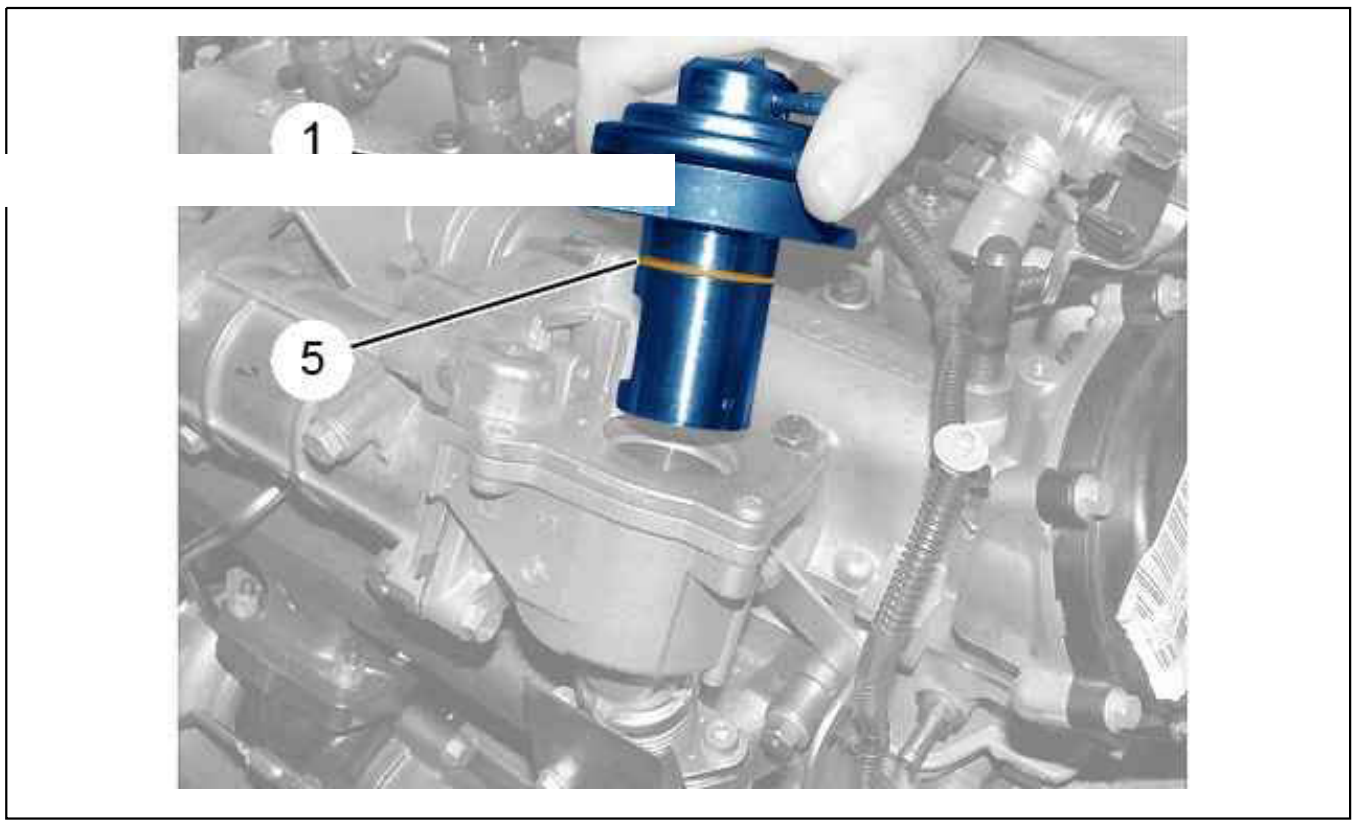

Figure : B1BPSGBD

CAUTION : Replace the seal (5) of the EGR electrovalve (1).

Refit :

- The EGR electrovalve (1)
- The bolts (2), (3)

Tighten :

- Screw (2) to 2,3 ± 0,3 daNm
- Screw (3) to 2,3 ± 0,3 daNm

Recouple the tube (4).

Reconnect the battery.

FORCED REGENERATION : PARTICLE FILTER (TECHNICAL NOTE)

ESSENTIAL : Observe the safety and cleanliness recommendations.

ESSENTIAL : Wait at least one hour before carrying out any work on the exhaust line.

1. Tooling

Diagnostic tool.

2. Forced regeneration of the particle emission filter

ESSENTIAL : Respect the safety and cleanliness recommendations that are specific to high pressure diesel injection (HDi) engines.

ESSENTIAL : Where the recommended installation is not available, carry out the forced regeneration of the particle filter outside the workshop, on an area of hard standing and remote from any inflammable materials. Make the work area secure. Ensure that no one passes or stands behind the vehicle during the forced regeneration. Put the vehicle in the "high" position (vehicle with hydraulic suspension). Check that there are no aerosols or inflammable products inside the boot. Wear heat-resistant gloves. Connect the vehicle to an approved gas extractor for this type of operation.

CAUTION : Check that the level of fuel in the tank is sufficient (minimum 20 litres).

CAUTION : Check the following fluid levels : Engine oil ; Coolant.

CAUTION : Check : The tightness of the turbocharging hoses (Risk of uncoupling).

ESSENTIAL : Remove the under-engine protection.

Start the engine and allow it to warm up (65°C minimum).
Connect the diagnostic tool on the vehicle’s central socket.
Carry out :

- Fault reading (Engine ECU)
- Fault clearing

Trigger the particle emission filter forced regeneration cycle ; Using the diagnostic equipment.
After the regeneration cycle : Allow the engine to run at idle, with the bonnet open, to help the cooling.
Stop the engine.

ESSENTIAL : Wait at least one hour before carrying out any work on the exhaust line. Wear heat-resistant gloves.

Refit the under-engine protection .

MODIFICATION : OXYGEN SENSOR

1. Application

Vehicles all types : Petrol injection engines.

2. Description

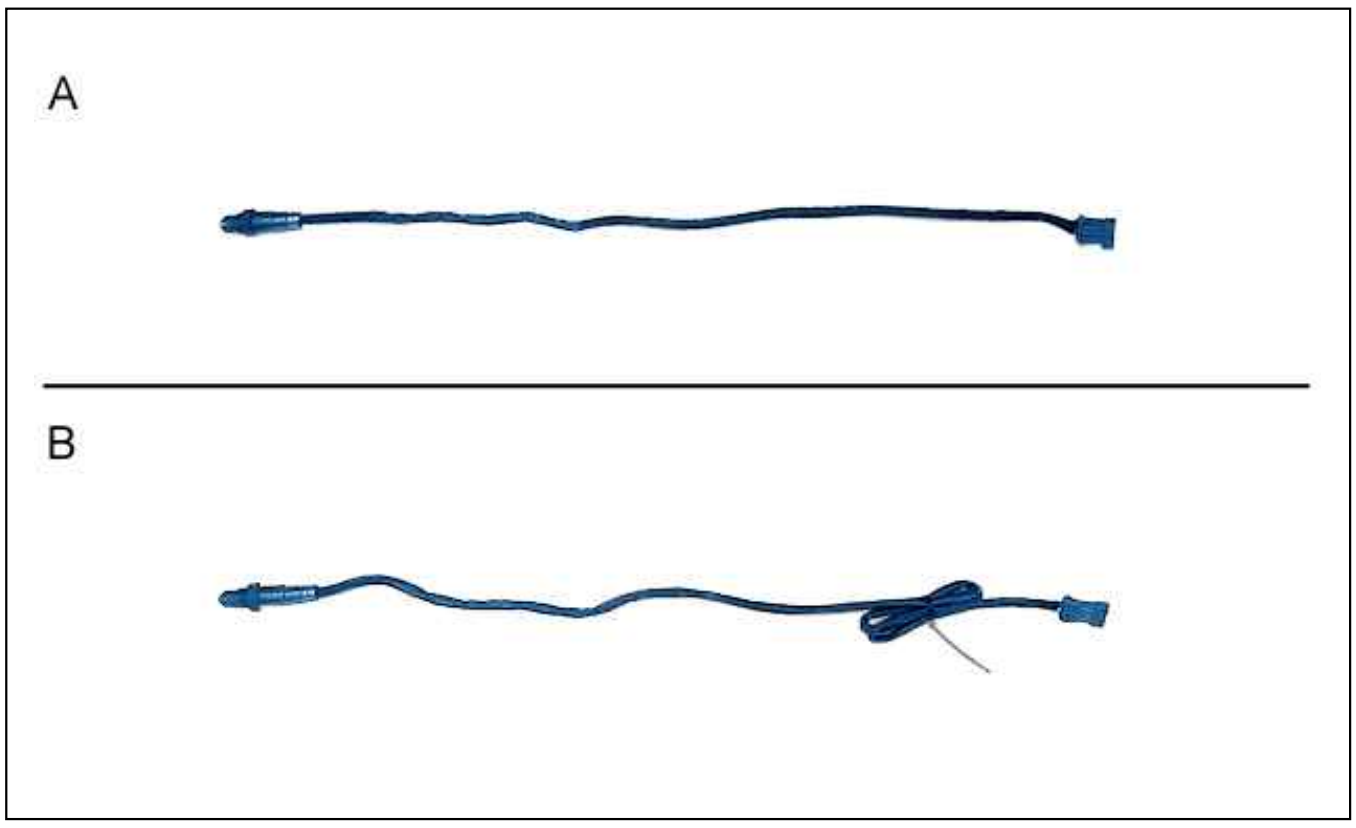

Figure : B1KT001D

Modification of the length of the oxygen sensor electrical harness.
"A" Old oxygen sensor.
"B" New oxygen sensor (Lengthened electrical harness).

3. Replacement Parts

Only the new parts will be available from the Replacement Parts Division once stocks have been exhausted.

4. Repair

The method for replacing the oxygen sensor is unchanged.

CAUTION : The electrical harness must always stay well out of range of the exhaust line . Secure the excess length of electrical harness with a zip strap.

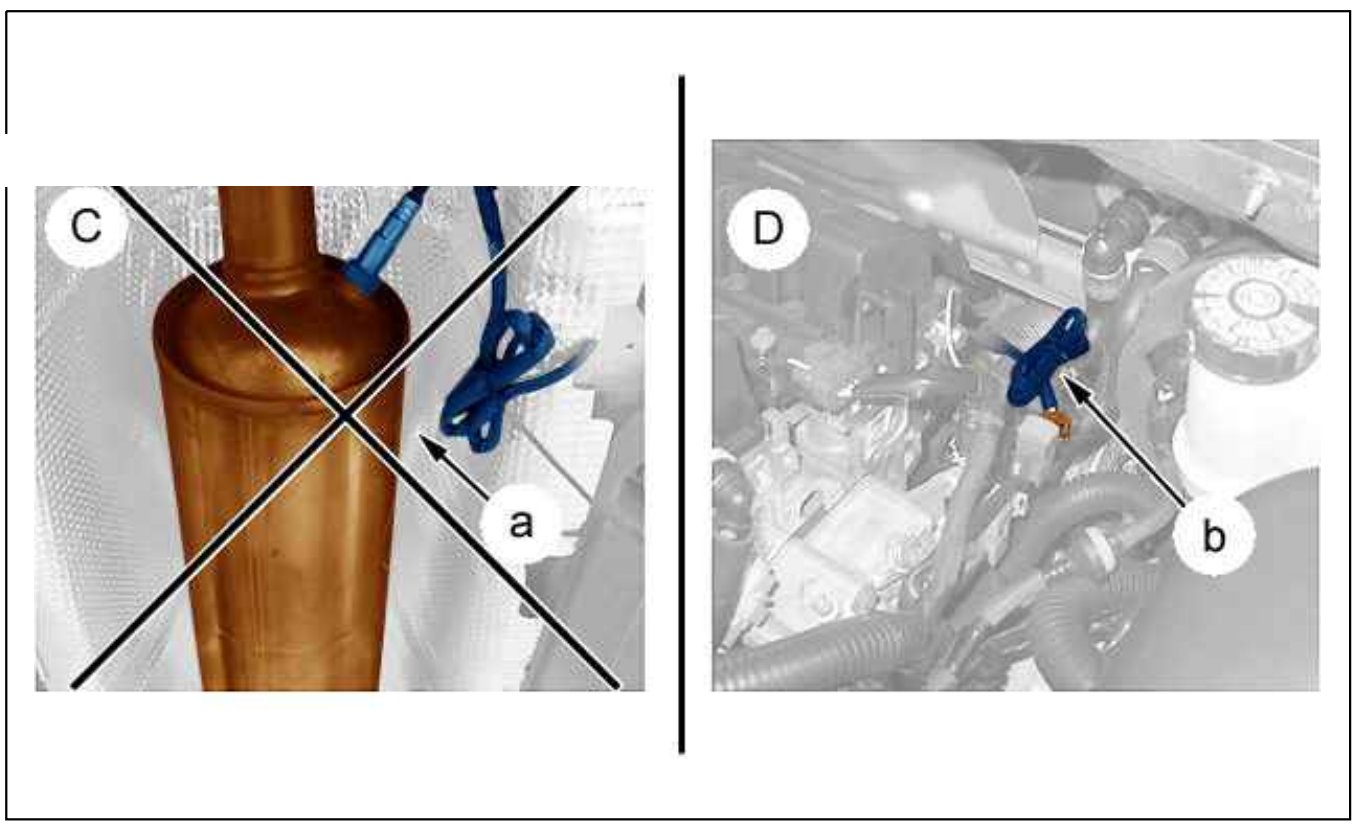

Figure : B1KT002D

"C" Assembly not correct : The excess electrical harness is secured close to the exhaust line (at " a").
"D" Assembly correct : Secure the excess electrical harness close to the connector (at " b").

TIGHTENING TORQUES : ENGINE/GEARBOX COUPLING

1. Tightening torques

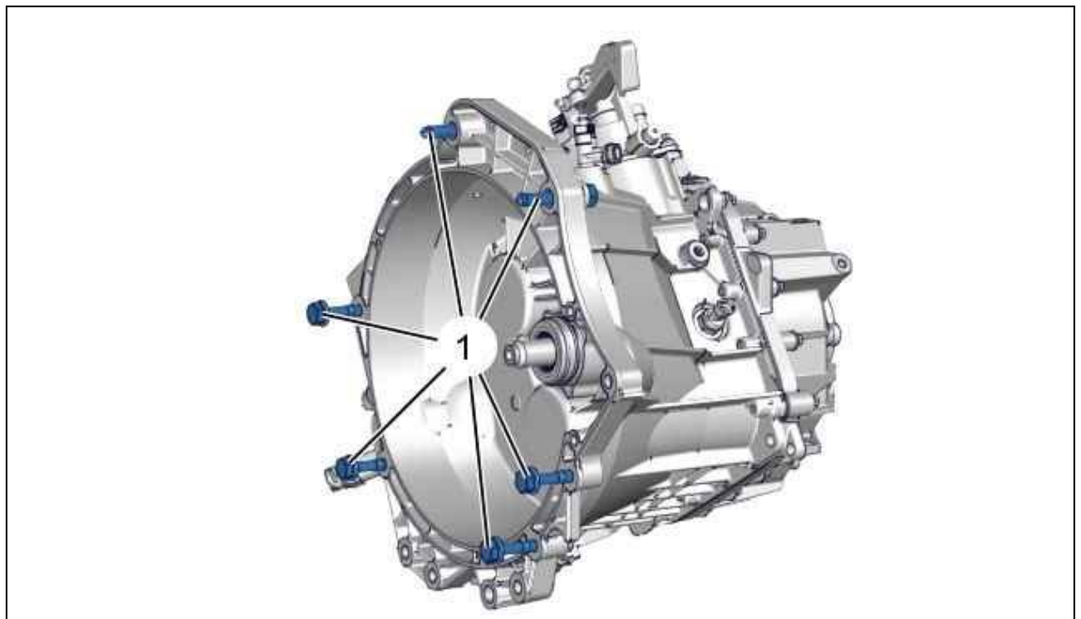

Figure : B2CB05TD

Reference	Designation	Tightening torque
(1)	Engine/gearbox coupling bolt (M40) (*)	6,5 daNm
(*) Follow the tightening sequence		

2. Sequence of tightening the bolts (1)

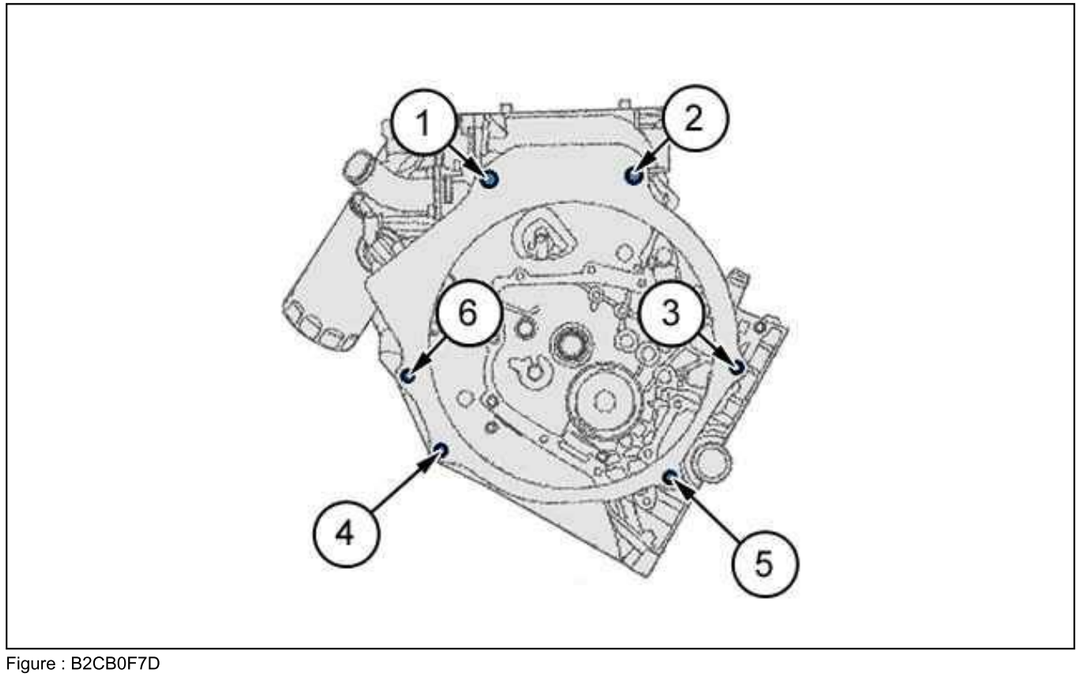

Figure : B2CB0F7D

REMOVING - REFITTING : ACCELERATOR PEDAL SENSOR

ESSENTIAL : Observe the safety and cleanliness recommendations .

1. Location

The sensor is integral to the accelerator pedal .

2. Removing

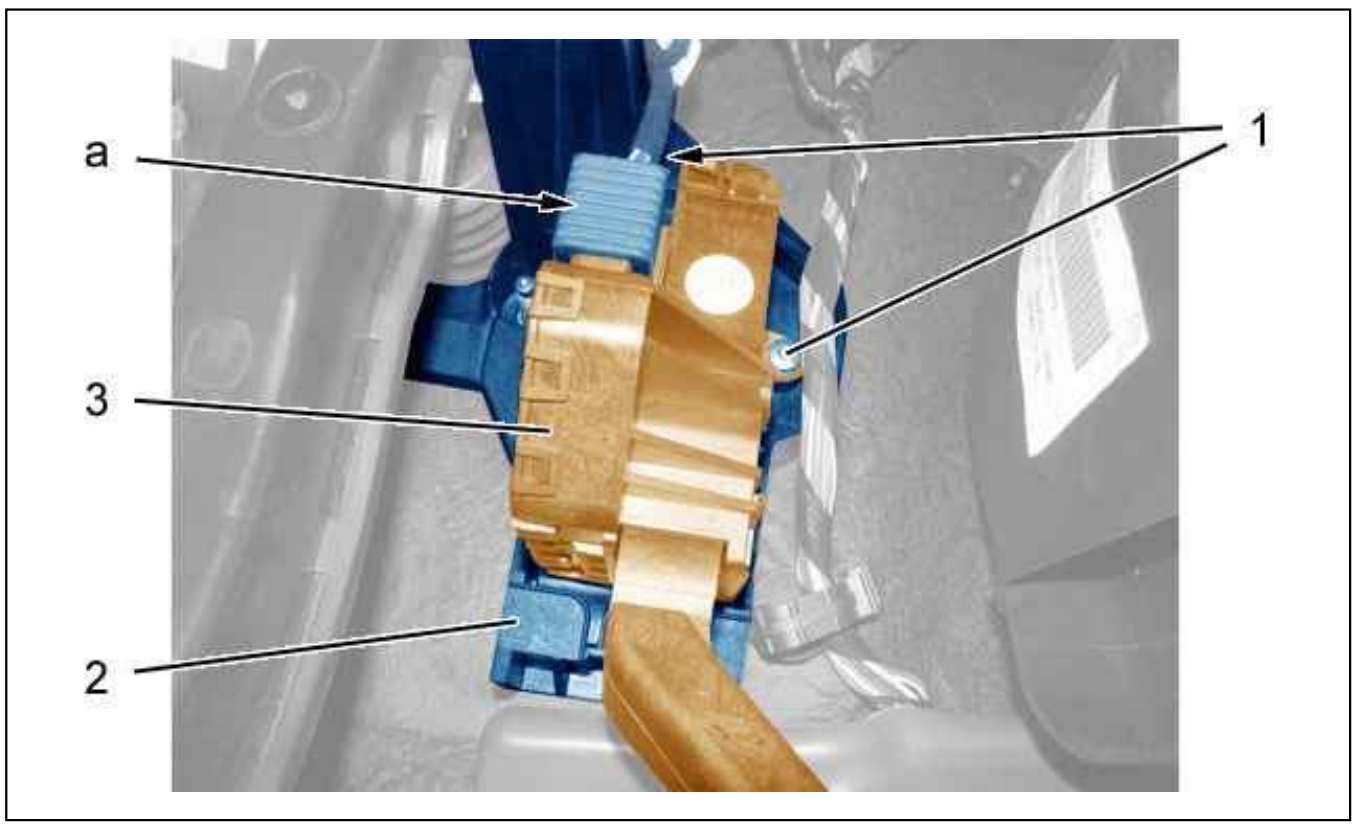

Figure : D1AG0K2D

Disconnect the connector (at "a").
Remove the bolts (1).
Raise the accelerator pedal (3) to uncouple it from the support (2).
Remove the accelerator pedal (3).

3. Refitting

Refit : The accelerator pedal (3).
Couple the accelerator pedal (3) on the support (2).
Refit the bolts (1).
Connect the connector at "a".

CHARGE : STARTING BATTERY

New vehicles delivered to customers now have a hydrometer which permits direct displaying of the charge status.

1. Application

This procedure applies to all ready-to-use batteries.
They are fitted on new vehicles or sold as Replacement Parts (boutique, warehouse, gondola end…).
The batteries must guarantee quality and reliability which meet the requirements of our customers.
They are an addition to the new vehicle preparation ranges distributed for each model of the range.

2. Recommended tools

Approved charging equipment : See garage equipment catalogue or, failing this, obtain a limited voltage charger.
Approved battery cable.

3. General principles for charging batteries

Comply with the maximum voltage indications and the nominal current level in relation to the type and size of the battery :

- Never apply an excessive voltage or current
- Use a charger suited to the battery and the type of charge required
- Do not use a rapid charger or, if the charger has this function, use the normal charge function
- Check the condition of the battery

N.B. : The effectiveness of the charge depends on the condition of the battery.

4. Precautions to be taken

Do not charge :

- A faulty battery (White hydrometer)
- A battery coated with sulphate (Depositing of a superficial layer of lead sulphate on the plates)
- A warm battery (Risk of thermal racing and damage)

5. Charging procedure

5.1. Preliminary operations

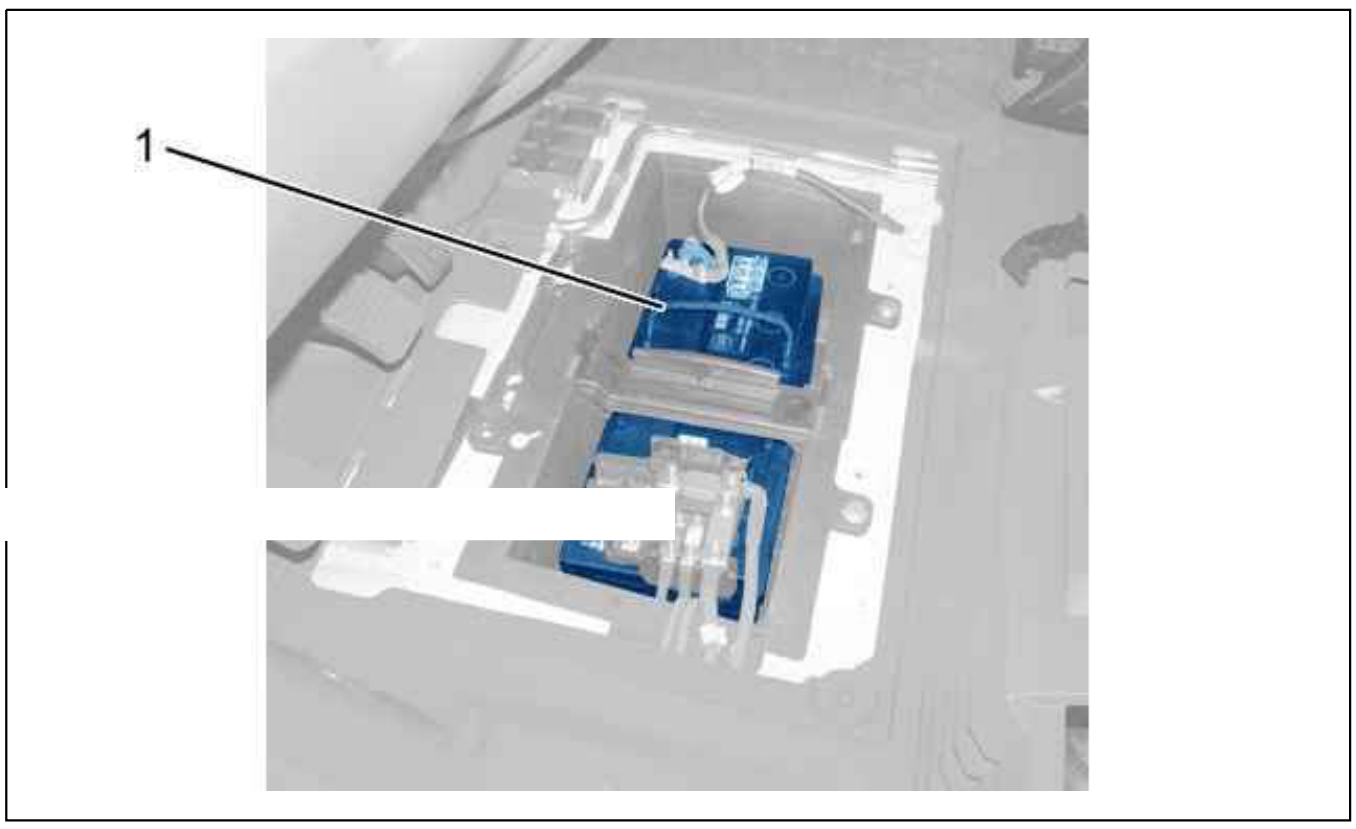

Figure : D1CP03JD

Remove the battery (1) located underneath the passenger compartment floor.

CAUTION : If the hydrometer is white, the battery is faulty : Replace the battery.

Check the conformity of the battery :

- Sealing of the case
- Absence of electrolyte leaks
- Absence of apparent signs of impact or cracks
- Status of the hydrometer

N.B. : Date of manufacture (If the battery was manufactured more than 6 months ago : Replace the battery).

5.2. Charging

Follow the operating instructions given by the manufacturer of the charger .
Check the clamps and terminals are clean . If the terminals are covered with sulphate (whitish or greenish deposit), strip and clean them.
The recharging operation must be carried out in a ventilated environment away from naked flames or any sources of sparks to prevent any risk of explosion and fire.
Do not recharge a frozen battery; it must first be thawed out to prevent the risk of an explosion; if it has frozen, have the battery checked before recharging by a specialist; they will check that the internal components have not been damaged and that the casing is not cracked, which would mean that toxic and

corrosive acid could leak.
In the case of batteries with topping of up of the electrolyte only :

- Connect the battery to the charger starting with the positive cable
- Check the level (15 mm above the plates) and top up with distilled water (if necessary)

CAUTION : In the case of batteries which do not require maintenance, removal of the caps and topping up with fluid is strictly prohibited.

5.3. Automatic charger

Use the normal charging programme (Rapid charging prohibited).

5.4. Charger with limited voltage

Adjust the charging current to 1/20 of the capacity (example: 45Ah provides a charging current of 2,25A) for a charging time of 6 to 12 hours.

5.5. Limited voltage charger

Charge with a voltage limited to 14,8 V for 12 hours with a current limited to 1/4 of the capacity.

5.6. Precautions to be taken (Battery charge)

Monitor the progress of the charge regularly, ensuring in particular that the battery does not get excessively warm or does not start to bubble.
When the charge is complete, first switch off the charger and then disconnect the battery.

6. Check following charging

Check the colour of the hydrometer :

- If it is green : The battery is correct
- Refit the battery on the vehicle
- If it is not green : An additional charge is necessary, until the hydrometer turns green, without exceeding the times defined
- After 2 unsuccessful charging cycles, the battery is faulty
- Replace the battery

7. Fast starting

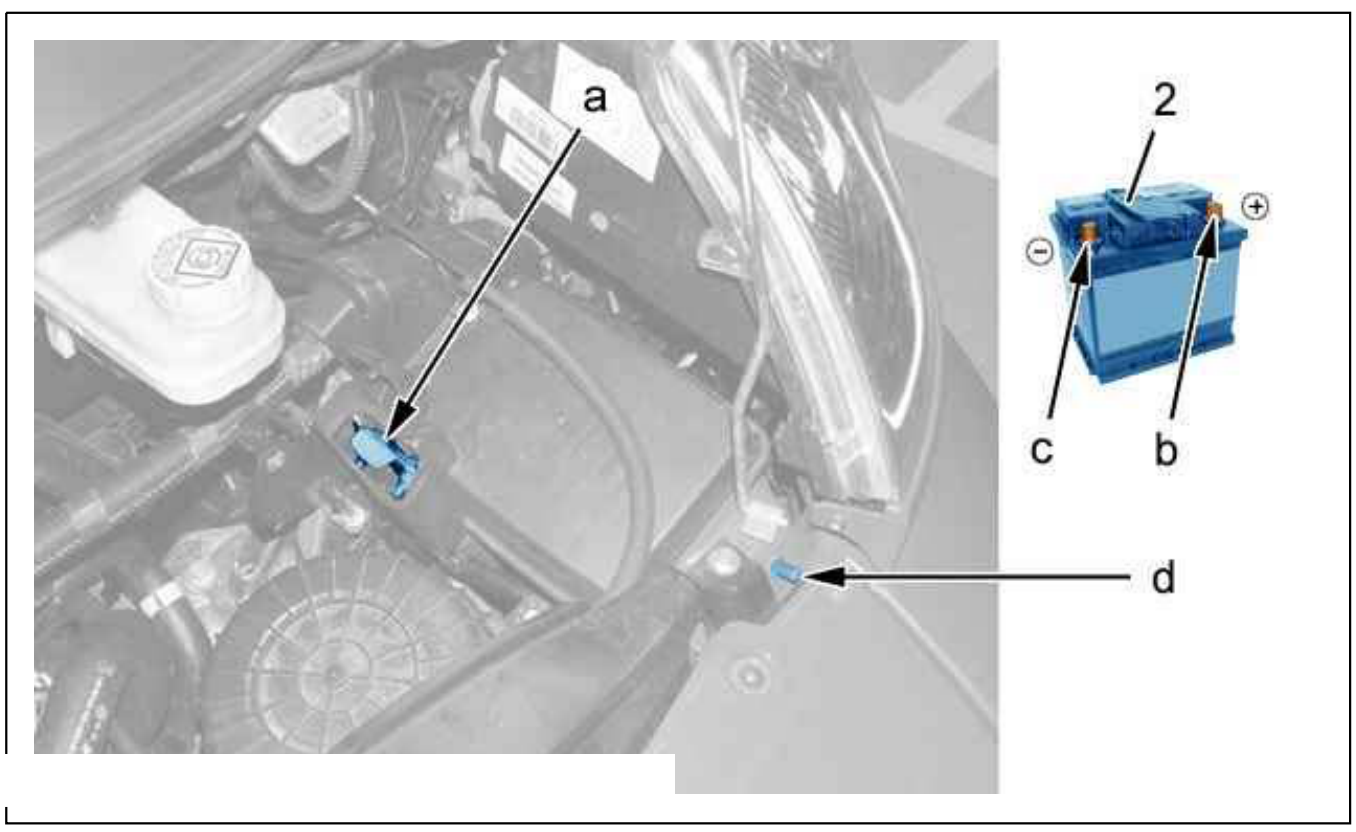

Figure : B1BPSPBD

Open the bonnet.

CAUTION : Scrupulously comply with the order of the following instructions.

Connect the red cable to the metal part of the positive terminal (+) (in "a") on the jump battery (2) (as "b").
Connect the black or green cable to the metal part of the negative terminal (-) (in "d") of the jump battery (2) (as "c").
Operate the starter ; Let the engine turn over.
Wait until it returns to idle and disconnect the cables.

MAINTENANCE : RECOMMENDED INGREDIENTS, YEAR 2006

1. Standards in force

The classification of the engine oils is established by the following recognised bodies :

- S.A.E. : Society of Automotive Engineers
- API : American Petroleum Institute
- ACEA : Association des Constructeurs Europeens d'Automobiles

2. S.A.E. standards

2.1. Engine oil grade selection table

The choice of engine oil grade depends on the climate of the country.

2.2. Préconisation des grades de viscosités

Choice of the various grades of viscosity remains dependent on use of the vehicle in the types of climate defined in the diagram below . Par exemple, l'utilisation du grade 10W 40 se limite aux pays tempérés (de -17 °C à +37 °C) ou à climat chaud.

N.B. : For any other application, the grade has to be chosen as a function of the climatic zone of the country where the vehicle is to be used.

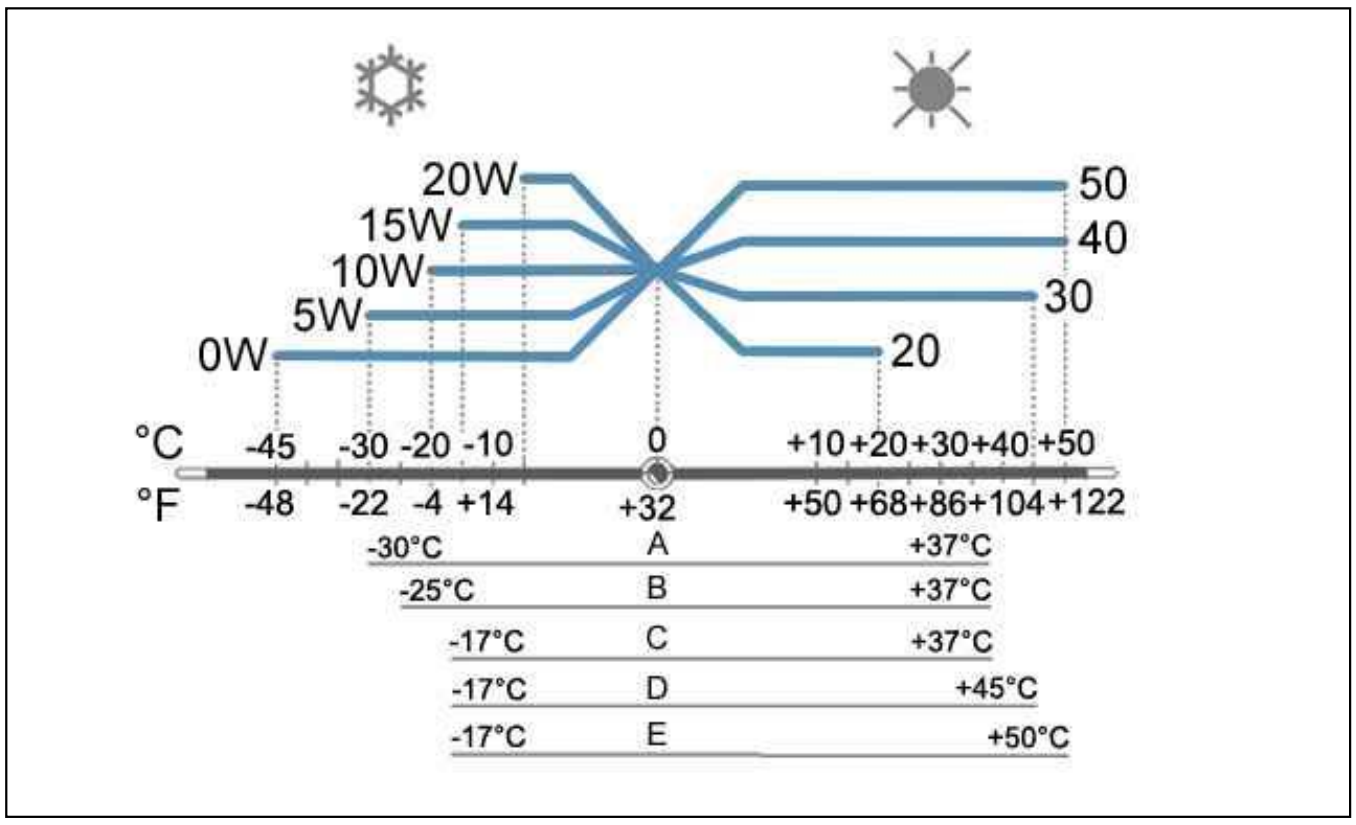

Figure : E4AP00BD

A : Very cold.
B : Cold.
C : Moderate.
D : Hot .
E : Very hot.

3. ACEA standards

3.1. Petrol and diesel mixed oils recommended by PSA

The meaning of the first letter does not change, it always refers to the engine type :

- A = Petrol and petrol/LPG dual fuel engines
- B = diesel engines

The next figure does change and refers to the following types of oil :

- 3 = High performance oils
- 4 = Oils specific to certain direct injection diesel engines
- 5 = Oils with very high performance, favouring lower fuel consumption

Examples :

- ACEA A3/B3 : Huiles mixtes hautes performances et bicarburation essence/GPL
- ACEA A5/B5 : Blended oils with very high performance, for all engines, favouring fuel economy

CAUTION : Since 2004, the ACEA has imposed mixed oils : A1/B1 , A3/B3, A3/B4, A5/B5. Therefore, all lubricants recommended by PSA are mixed ; There are no longer any oils specific to petrol or diesel.

3.2. Introduction of low ash content oils (LOW SAPS)

Oils with low ash content reduce the amount of particles entering the exhaust and so help lengthen the life of the particle filter.
The ash content changes from 1,3 % in current oils to 0,8 % in these new oils (maximum permitted values).

N.B. : LOW SAPS (Sulphated Ash Phosphorus Sulphur).

New specifications ACEA :

- C3 : Moderate ash content
- C2 : Moderate ash content and fuel economy
- C1 : Very low ash content and fuel economy

The C2 oil, specific to PSA, corresponds to a request to reduce the ash within a reasonable cost limit while maintaining fuel economy requirements.
The C2 oil is a petrol and diesel mixed oil with energy economy particularly suited to engines fitted with a particle filter.

4. API oil standards

The meaning of the first letter does not change, it always refers to the engine type :

- S = Petrol and petrol/LPG dual fuel engines
- C = diesel engines

The second letter corresponds to the evolution level of the oil (in rising order).
Example : The standard SL is stricter than the standard SJ and corresponds to an improved level of performance.

5. Qualité des huiles moteur

The engine lubrication oils are classified in line with 3 quality levels :

- Mineral oil or level 1 PSA
- Semi-synthetic oil or level 2 PSA
- Synthetic oil or level 3 PSA

ESSENTIAL : To ensure that the engines retain their performance, it is essential that only high quality engine oil is used : Level 2 PSA minimum (synthetic or semi-synthetic oils).

CAUTION : L'huile minérale ne peut être utilisée que sur les véhicules équipés de la motorisation type 384F.

CAUTION : For vehicles sold from model year 1999 (7/98), in accordance with the normal maintenance plan, the use of an approved semi-synthetic oil is imperative.

6. Nouvelle huile à économie de carburant et antipollution

Cette huile contribue aux objectifs d'économie d'énergie et de réductions des émissions polluantes visés par le groupe et concerne plus particulièrement les véhicules diesel équipés de filtres à particules.

N.B. : Se référer au Chapitre 8 : restrictions pour toutes applications avec cette huile.

CAUTION : L'huile à Économie d'Énergie 5W30, au périmètre d'application restreint, notamment sur moteurs HDi avec filtre à particules et moteurs à essence XU10J4RS, EW10J4S, EW12J4, EW12E4, EW10A, EW7A est retirée progressivement de la commercialisation.

7. Recommendations(in normal driving conditions)

Les moteurs PSA sont lubrifiés en première monte avec de l'huile TOTAL ACTIVA/QUARTZ INEO ECS, aux propriétés Économie de carburant et Antipollution.
Respecter les intervalles de vidanges standards :

- For vehicles with maintenance interval of 30 000 km (20 000 miles), use exclusively one of the oils TOTAL ACTIVA / QUARTZ 7000, 9000 or INEO EC or any other oils with equivalent specifications. The specifications of these oils are higher than those defined by standard ACEA A3/B3 or API SL/CF . Failing this, you should follow the maintenance schedules for severe operating conditions
- In the case of Diesel vehicles with Particle Filter, for lasting optimum operation of the PEFs, the use of low ash content oil TOTAL ACTIVA INEO ECS for France and TOTAL QUARTZ INEO ECS outside France is particularly recommended (Or any other oils with equivalent specifications)

France				
-	Recommended oil *	Description	ACEA standards	API oil standards
Petrol and diesel engines	ACTIVA INEO ECS	Synthetic anti-pollution 5W-30	C2 and A5/B5	-
	[illegible]	Synthetic 0W-30	A3/B4	SL/CF
	ACTIVA 9000 5W-40	Synthetic 5W-40	A3/B4	SL/CF
	ACTIVA 7000	Semi-synthetic 10W-40	A3/B3	SL/CF
	ACTIVA Diesel 7000 10W40			
	ACTIVA 5000 15W40**	Mineral 15W40	-	SL

* : Or any other oils with equivalent specifications.
** : For 384F type engine only.

Other countries				
-	Recommended oil *	Description	ACEA standards	API oil standards
Petrol and diesel engines	QUARTZ INEO ECS	Synthetic anti-pollution 5W-30	C2 and A5/B5	-
	QUARTZ Energy 9000 0W-30	Synthetic 0W-30	A3/B4	SL/CF
	QUARTZ 9000 5W-40	Synthetic 5W-40	A3/B4	SL/CF
	QUARTZ 7000	Semi-synthetic 10W-40	A3/B3	SL/CF
	QUARTZ Diesel 700010W-40			
	QUARTZ 5000 15W40 **	Mineral 15W40	-	SL

* : Or any other oils with equivalent specifications.
** : For 384F type engine only.

8. Restrictions

N.B. : Reading of the engine specifications.

On reception, identify the vehicle by its commercial description.
Read the legislative code on the vehicle identification plate from the 3rd, 4th and 5th characters.

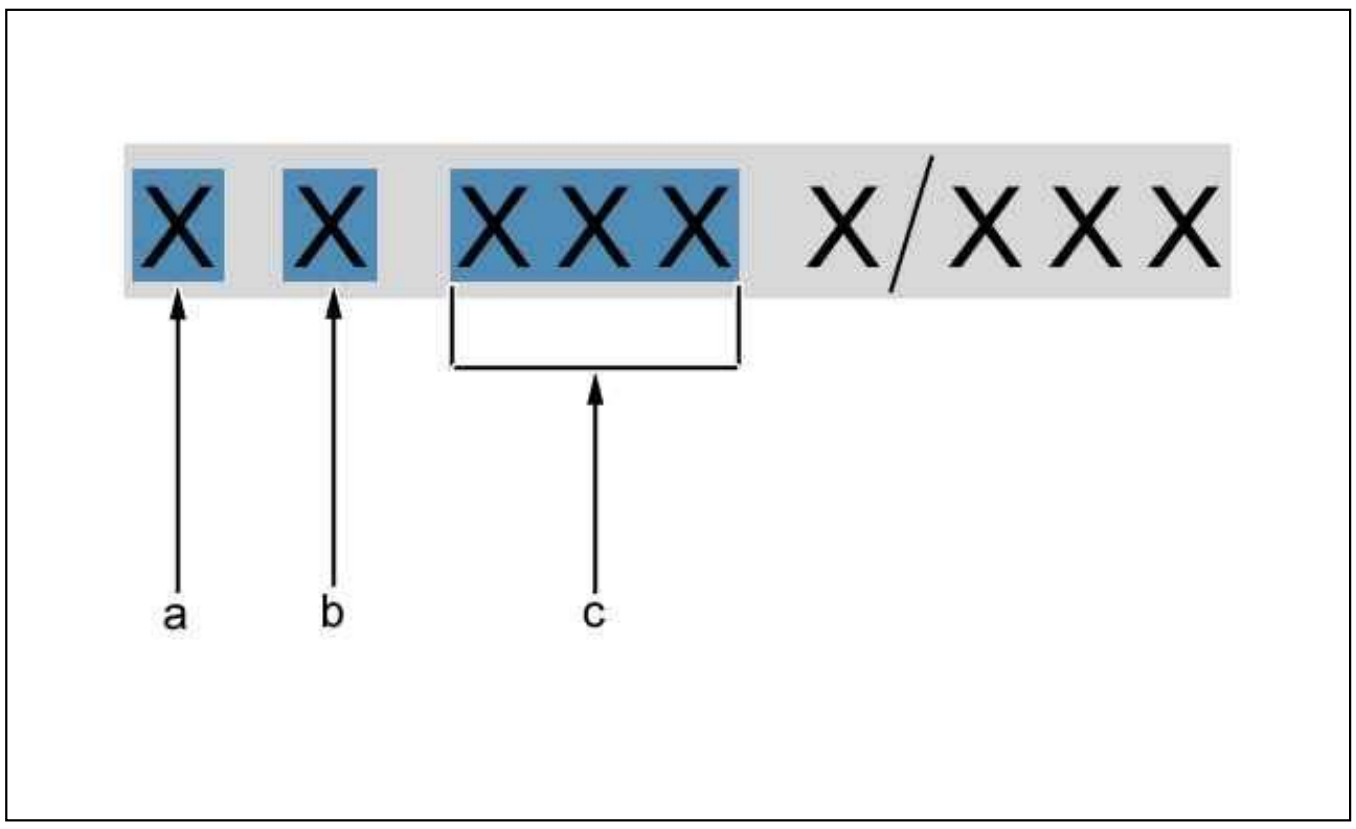

Figure : B1FP06ED

a : Family (vehicle).
b : Shape.
c : engine (legislation type).

With the engine legislative code and the country in which the work is to be carried out, identify the engine oil recommendations.

CAUTION : Category ACEA 5W30 C2 oil must not be used in engines earlier than 2000 (7/99) model year.

8.1. TU/ET engines

Engine type	Engine identification	0W40 oil	5W40 oil	10W40 oil	0W30 oil	5W30 oil	5W30 C2 oil
TU1	HFX / HFY / HFZ	OK	OK	OK	OK	OK	OK
TU3/ET3	KFW / KFV / K6D / K6E / KFU /	OK	OK	OK	OK	OK	OK
TU5	NFV / NFS / NFU / N6A / NFT / N6B	OK	OK	OK	OK	OK	OK

8.2. EW engines

Engine type	Engine identification	0W40 oil	5W40 oil	10W40 oil	0W30 oil	5W30 oil	5W30 C2 oil
EW7J4	6FZ	OK	OK	OK	OK	OK	OK
EW7A	6FY	OK	OK	OK	-	-	-
EW10J4	RFN / RFM /RFP/ RFR	OK	OK	OK	OK	OK	OK
EW10A	RFJ	OK	OK	OK	-	-	-
EW10J4S	RFK	-	OK	-	-	-	-
EW12J4	3FZ	OK	OK	OK	-	-	-
EW12E4	3FY	OK	OK	OK	-	-	-

8.3. ES engine

Engine type	Engine identification	0W40 oil	5W40 oil	10W40 oil	0W30 oil	5W30 oil	5W30 C2 oil
ES9A	XFU / XFV	OK	OK	OK	OK	OK	OK

8.4. XU engine

Engine type	Engine identification	0W40 oil	5W40 oil	10W40 oil	0W30 oil	5W30 oil	5W30 C2 oil
XU10J4RS	RFS	-	OK	-	-	-	-

8.5. TOYOTA engine

Engine type	Engine identification	0W40 oil	5W40 oil	10W40 oil	0W30 oil	5W30 oil	5W30 C2 oil	15W40 oil
384F	CFA	OK	OK	OK	OK	OK	OK	OK

8.6. dv engines

Engine type	Engine identification	0W40 oil	5W40 oil	10W40 oil	0W30 oil	5W30 oil	5W30 C2 oil
DV4TD	8HT / 8HZ / 8HX	OK	OK	OK	OK	OK	OK
DV4TED4	8HV / 8HY	OK	OK	OK	OK	OK	OK
DV6ATED4	9HX	OK	OK	OK	OK	OK	OK
DV6TED4	9HY	OK	OK	OK	OK	OK	OK
DV6TED4 with particle filter	9HZ	OK	OK	OK	-	-	OK

8.7. DW engines

Engine type	Engine identification	0W40 oil	5W40 oil	10W40 oil	0W30 oil	5W30 oil	5W30 C2 oil
DW10TD	RHY /RHV / RHU	OK	OK	OK	OK	OK	OK
DW10ATED	RHZ	OK	OK	OK	OK	OK	OK

DW10ATED4	RHW	OK	OK	OK	OK	OK	OK
DW10ATED with particle filter	RHS/	OK	OK	OK	-	-	OK
DW10ATED4 with particle filter	RHT/ RHM	OK	OK	OK	-	-	OK
DW10BTED	RHX	OK	OK	OK	OK	OK	OK
DW10BTED4 with particle filter	RHR / RHL	OK	OK	OK	-	-	OK
DW12BTED4 with particle filter	4HP / 4HR / 4HS / 4HT	OK	OK	OK	-	-	OK
DW12UTED	4HY	OK	OK	OK	OK	OK	OK
DW12TED4 with particle filter	4HW / 4HX	OK	OK	OK	-	-	OK
DW8	WJZ	OK	OK	OK	OK	OK	OK
DW8B	WJY / WJX	OK	OK	OK	OK	OK	OK

8.8. DT engine

Engine type	Engine identification	0W40 oil	5W40 oil	10W40 oil	0W30 oil	5W30 oil	5W30 C2 oil
DT17	UHZ	OK	OK	OK	-	-	OK

8.9. SOFIM engines

Engine type	Engine identification	0W40 oil	5W40 oil	10W40 oil	0W30 oil	5W30 oil	5W30 C2 oil
F28DT	8140.43S / 8140.23	OK	OK	OK	OK	OK	OK
F28DTGV	8140.43 N	OK	OK	OK	OK	OK	OK

9. Engine oils

9.1. France

-	All-purpose mixed oil
Metropolitan France	TOTAL ACTIVRAC S.A.E. standards : 10W40

-	TOTAL ACTIVA	TOTAL ACTIVA diesel
-	Mixed oils for all engines	Oil specifically for diesel engines
Metropolitan France	INEO ECS 5W30 / 9000 Energy 0W30 / 9000 5W40 / 7000 10W40	7000 10W40
New Caledonia	9000 5W40 / 7000 15W50 / 7000 10W40	7000 15W50 / 7000 10W40
Guadeloupe		
Saint Martin		
Reunion		
Martinique		
Guyana		
Tahiti		
Mauritius		
Mayotte		
INEO ECS 5W30 : Huiles mixtes à bas taux de cendres pour tous moteurs permettant une économie de carburant et des effets antipollution		

9.2. Europe

-	TOTAL QUARTZ	TOTAL QUARTZ diesel
-	Mixed oils for all engines	Oil specifically for diesel engines
	)W30 / 9000 5W40 / 7000 10W40	7000 10W40
Austria	INEO ECS 5W30 / 9000 Energy 0W30 / 9000 5W40 / 7000 10W40	7000 10W40
Belgium	INEO ECS 5W30 / 9000 Energy 0W30 / 9000 5W40 / 7000 10W40	7000 10W40
Bosnia	INEO ECS 5W30 / 9000 Energy 0W30 / 9000 5W40 / 7000 10W40	7000 10W40
Bulgaria	INEO ECS 5W30 / 9000 Energy 0W30 / 9000 5W40 / 7000 10W40	7000 10W40
Cyprus	INEO ECS 5W30 / 9000 Energy 0W30 / 9000 5W40 / 7000 10W40 / 7000 15W50	7000 10W40
Croatia	INEO ECS 5W30 / 9000 Energy 0W30 / 9000 5W40 / 7000 10W40	7000 10W40
Denmark	INEO ECS 5W30 / 9000 Energy 0W30 / 9000 5W40 / 7000 10W40	7000 10W40
Spain	INEO ECS 5W30 / 9000 Energy 0W30 / 9000 5W40 / 7000 10W40/ 7000 15W50	7000 10W40
Estonia	INEO ECS 5W30 / 9000 Energy 0W30 / 9000 5W40 / 7000 10W40	7000 10W40
Finland	INEO ECS 5W30 / 9000 Energy 0W30 / 9000 5W40 / 7000 10W40	7000 10W40
Great Britain	INEO ECS 5W30 / 9000 Energy 0W30 / 9000 5W40 / 7000 10W40	7000 10W40
Greece	INEO ECS 5W30 / 9000 Energy 0W30 / 9000 5W40 / 7000 10W40/ 7000 15W50	7000 10W40
Holland	INEO ECS 5W30 / 9000 Energy 0W30 / 9000 5W40 / 7000 10W40	7000 10W40
Hungary	INEO ECS 5W30 / 9000 Energy 0W30 / 9000 5W40 / 7000 10W40	7000 10W40
Italy	INEO ECS 5W30 / 9000 Energy 0W30 / 9000 5W40 / 7000 10W40	7000 10W40
Ireland	INEO ECS 5W30 / 9000 Energy 0W30 / 9000 5W40 / 7000 10W40	7000 10W40
Iceland	INEO ECS 5W30 / 9000 Energy 0W30/ 9000 5W40/ 7000 10W40	7000 10W40
Latvia	INEO ECS 5W30 / 9000 Energy 0W30 / 9000 5W40 / 7000 10W40	7000 10W40
Lithuania	INEO ECS 5W30 / 9000 Energy 0W30 / 9000 5W40 / 7000 10W40	7000 10W40
Macedonia	INEO ECS 5W30 / 9000 Energy 0W30 / 9000 5W40 / 7000 10W40	7000 10W40
Malta	INEO ECS 5W30 / 9000 Energy 0W30 / 9000 5W40 / 7000 10W40 / 7000 15W50	7000 10W40
Moldavia	INEO ECS 5W30 / 9000 Energy 0W30 / 9000 5W40 / 7000 10W40	7000 10W40
Norway	INEO ECS 5W30 / 9000 Energy 0W30 / 9000 5W40 / 7000 10W40	7000 10W40
Poland	INEO ECS 5W30 / 9000 Energy 0W30 / 9000 5W40 / 7000 10W40	7000 10W40
Portugal	INEO ECS 5W30 / 9000 Energy 0W30 / 9000 5W40 / 7000 10W40	7000 10W40

Czech Republic	INEO ECS 5W30 / 9000 Energy 0W30 / 9000 5W40 / 7000 10W40	7000 10W40
Roumania	INEO ECS 5W30 / 9000 Energy 0W30 / 9000 5W40 / 7000 10W40 / 7000 15W50	7000 10W40
Russia	INEO ECS 5W30 / 9000 Energy 0W30 / 9000 5W40 / 7000 10W40	7000 10W40
Slovenia	INEO ECS 5W30 / 9000 Energy 0W30 / 9000 5W40 / 7000 10W40	7000 10W40
Slovakia	INEO ECS 5W30 / 9000 Energy 0W30/ 9000 5W40/ 7000 10W40	7000 10W40
Sweden	INEO ECS 5W30 / 9000 Energy 0W30 / 9000 5W40 / 7000 10W40	7000 10W40
Switzerland	INEO ECS 5W30 / 9000 Energy 0W30 / 9000 5W40 / 7000 10W40	7000 10W40
Turkey	INEO ECS 5W30 / 9000 Energy 0W30 / 9000 5W40 / 7000 10W40 / 7000 15W50	7000 10W40
Ukraine	INEO ECS 5W30 / 9000 Energy 0W30 / 9000 5W40 / 7000 10W40	7000 10W40
Serbia-Montenegro	INEO ECS 5W30 / 9000 Energy 0W30 / 9000 5W40 / 7000 10W40	7000 10W40
INEO ECS 5W30 : Huiles mixtes à bas taux de cendres pour tous moteurs permettant une économie de carburant et des effets antipollution		

9.3. Oceania

-	TOTAL QUARTZ	TOTAL QUARTZ diesel
-	Mixed oils for all engines	Oil specifically for diesel engines
Australia	INEO ECS 5W30 / 9000 5W40 / 7000 10W40	7000 10W40
New Zealand		
INEO ECS 5W30 : Huiles mixtes à bas taux de cendres pour tous moteurs permettant une économie de carburant et des effets antipollution		

9.4. Africa

-	TOTAL QUARTZ	TOTAL QUARTZ diesel
-	Mixed oils for all engines	Oil specifically for diesel engines
Algeria	9000 5W40 / 7000 10W40 / 7000 15W50 / 5000 15W40 / 5000 20W50	7000 10W40 / 5000 15W40
South Africa		
Benin		
Burkina		
Burundi		
Cameroon		
Central African Republic		
Congo		
Ivory Coast		
Djibouti		
Egypt		
Érythrée		
Ethiopia		
Gabon		
Gambia		
Ghana		
Guinea		
Kenya		
Madagascar		
Malawi		
Mali		
Mauritania		
Morocco		
Nigeria		
Niger		
Uganda		
Rwanda		
Somalia		
Senegal		
Tunisia		
Tanzania		
Chad		
Togo		
Zambia		
Zimbabwe		

9.5. Central and South America

-	TOTAL QUARTZ	TOTAL QUARTZ diesel
-	Mixed oils for all engines	Oil specifically for diesel engines
Argentina	9000 5W40 / 7000 10W40 / 7000 15W50 / 5000 15W40 / 5000 20W50	7000 10W40 / 5000 15W40
Brazil		
Chile		
Cuba		
Costa Rica		
Haiti		
Jamaica		

Mexico		
Paraguay		
Puerto Rico		
Uruguay		

9.6. South East Asia

-	TOTAL QUARTZ	TOTAL QUARTZ diesel
-	Mixed oils for all engines	Oil specifically for diesel engines
China	INEO ECS 5W30 / 9000 5W40 / 7000 10W40 / 5000 10W40 / 7000 15W50 / 7000 5W30	7000 10W40 / 5000 15W40
South Korea	INEO ECS 5W30 / 9000 5W40 / 7000 10W40	
Hong Kong	INEO ECS 5W30 / 9000 5W40 / 7000 15W50	
India	9000 5W40 / 7000 15W50	
Indonesia	9000 5W40 / 7000 15W50	
JAPAN	INEO ECS 5W30 / 9000 5W40 / 7000 10W40 / 7000 15W50	
Malaysia	9000 5W40 / 7000 15W50	
Pakistan		
Philippines		
Singapore		
Taiwan	9000 5W40 / 7000 10W40 / 7000 15W50	
Thailand	9000 5W40 / 7000 15W50	
Vietnam		
Cambodia		

INEO ECS 5W30 : Huiles mixtes à bas taux de cendres pour tous moteurs permettant une économie de carburant et des effets antipollution

9.7. Middle East

-	TOTAL QUARTZ	TOTAL QUARTZ diesel
-	Mixed oils for all engines	Oil specifically for diesel engines
Saudi Arabia	9000 5W40 / 7000 15W50 / 5000 15W40 / 5000 20W50	7000 10W40 / 5000 15W40
Bahrain		
Dubai		
United Arab Emirates		
Iran	9000 5W40 / 7000 10W40 / 7000 10W50 / 5000 15W40 / 5000 20W50	
Israel	9000 5W40 / 7000 15W50 / 5000 15W40 / 5000 20W50	
Jordan		
Kuwait		
Lebanon		
Oman		
Qatar		
Syria		
Yemen		

10. gearbox oil

Type of gearbox	Country	Type of oil
	ries	TOTAL TRANSMISSION BV 75W80 (reference PR 9730 A2)
		Special oil (reference PR : 9736 41)
MCP piloted gearbox actuator	All countries	Special oil (reference PR : 9979.A4)
Gearboxes Type MMT	All countries	Special oil (reference PR : 9730.A8)
MB3 automatic gearbox	All countries	TOTAL FLUIDE ATX
		TOTAL FLUIDE AT 42
		Special oil (reference PR : 9730 A6)
4HP20 and AL4 automatic gearboxes	All countries	Special oil (reference PR : 9736 22)
AM6 automatic gearbox	All countries	Special oil (reference PR : 9980 D4)
Transfer box - Rear axle	All countries	TOTAL TRANSMISSION X4 (reference PR : 9730 A7)

11. Power steering fluid

power assisted steering	Country	Type of oil
All vehicles up to CITROËN C5 and PEUGEOT 307 exclusive (except 206 with electric pump unit)	All countries	TOTAL FLUIDE ATX : Special oil (part no PR : 9730 A6)
All vehicles from CITROËN C5 and PEUGEOT 307 (206 with electropump assembly)	All countries	TOTAL FLUIDE LDS : Special oil (PR No. 9979 A3 or 9730 A5)
All vehicles	Very cold country	TOTAL FLUIDE DA : Special oil RP reference 9730 A5

12. Engine coolant

	-	part no PR	
Country	Packaging	GLYSANTIN G33	REVKOGEL 2000
All countries	2 litres	9979 70	9979 72

	5 litres	9979 71	9979 73
	20 litres	9979 76	9979 74
	210 litres	9979 77	9979 75

Fluid with protection to : -35 °C.

13. Brake fluid

Synthetic brake fluid			
Country	Brake fluid	Packaging	part no PR
All countries	Brake fluid : DOT4	0,5 litre	9979 05
		1 litre	9979 06
		5 litres	9979 07

14. Hydraulic circuit

All countries	Standard	Packaging	Reference citroën
TOTAL FLUIDE LDS	Orange colour	1 litre	9979 A3
TOTAL LHM PLUS	Coloured green	1 litre	9979 A1
TOTAL LHM PLUS Very Cold Climate	Coloured green	1 litre	9979 A2

CAUTION : TOTAL FLUIDE LDS oil cannot be mixed with TOTAL LHM PLUS oil.

15. Screen washer fluid

Country	Packaging	part no PR	part no PR	part no PR
All countries	Concentrated : 250 ml	9980 33	ZC 9875 953U	9980 56
	Fluid ready for use : 1 litre	9980 06	ZC 9875 784U	-
	Fluid ready for use : 5 litres	9980 05	ZC 9885 077U	ZC 9875 279U

16. Greasing

Country	Type	NLGI standards
All countries	TOTAL MULTIS 2	2
	TOTAL PETITS MECANISMES	-

N.B. : NLGI : National Lubricating Grease Institute.

REMOVING - REFITTING : ENGINE/GEARBOX ASSEMBLY

ESSENTIAL : Observe the safety and cleanliness recommendations .

1. Tooling

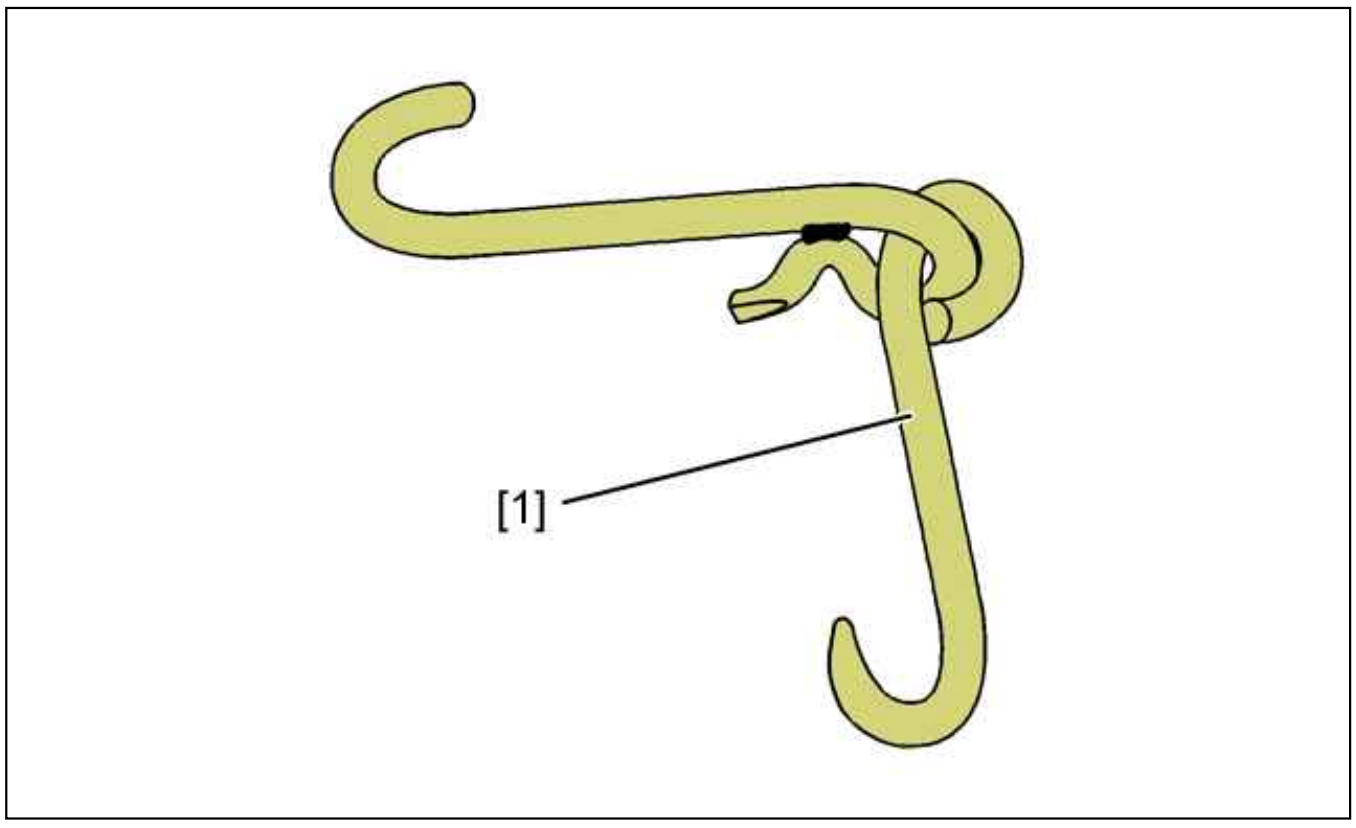

Figure : E5AP32KD

Reference	Designation	Reference	Reference
[1]	Bonnet retaining hook	5706-T	(-).1331

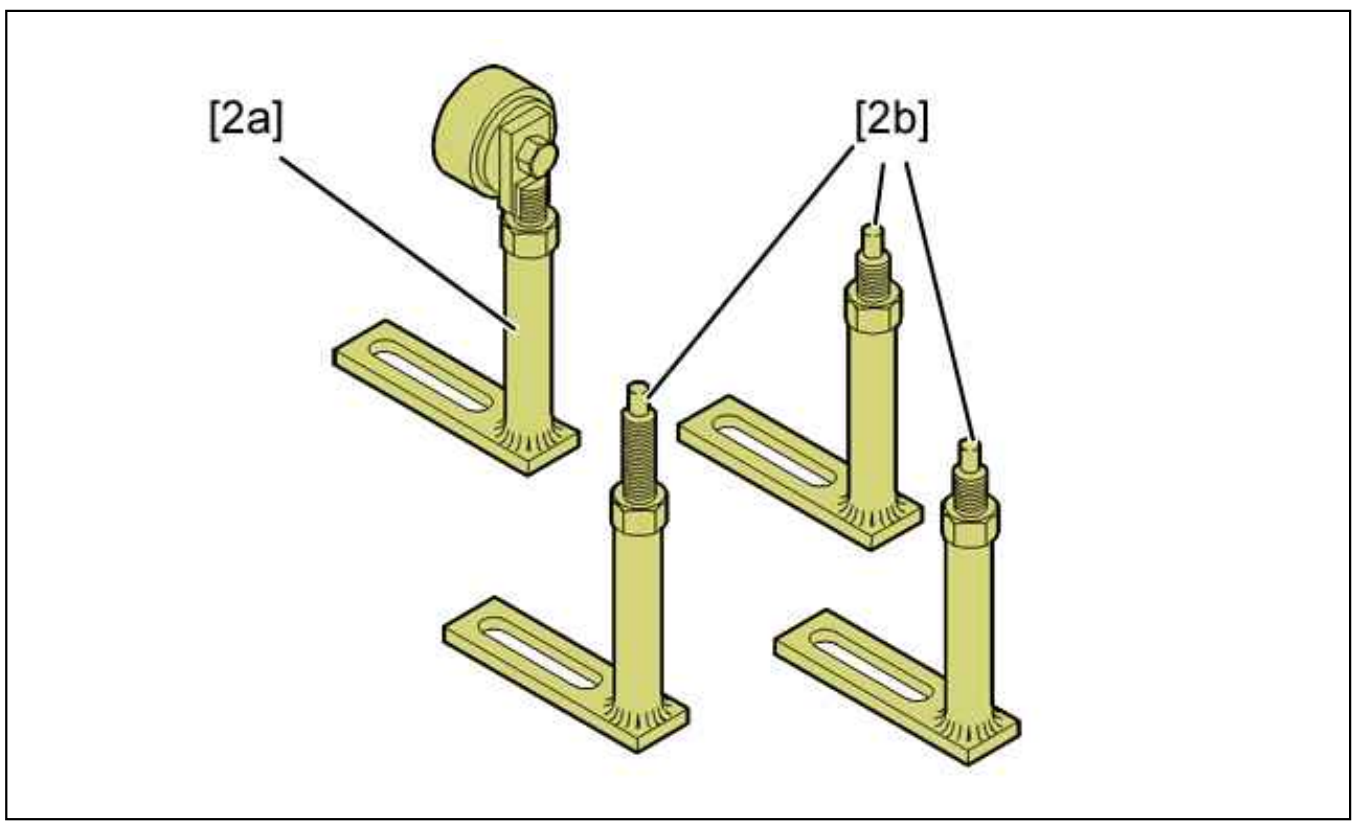

Figure : E5AP32LD

Reference	Designation	Reference	Reference
[2a]	Engine mounting with reversible tool	5704-T	(-).0005
[2b]	engine supports	5704-T	(-).0005

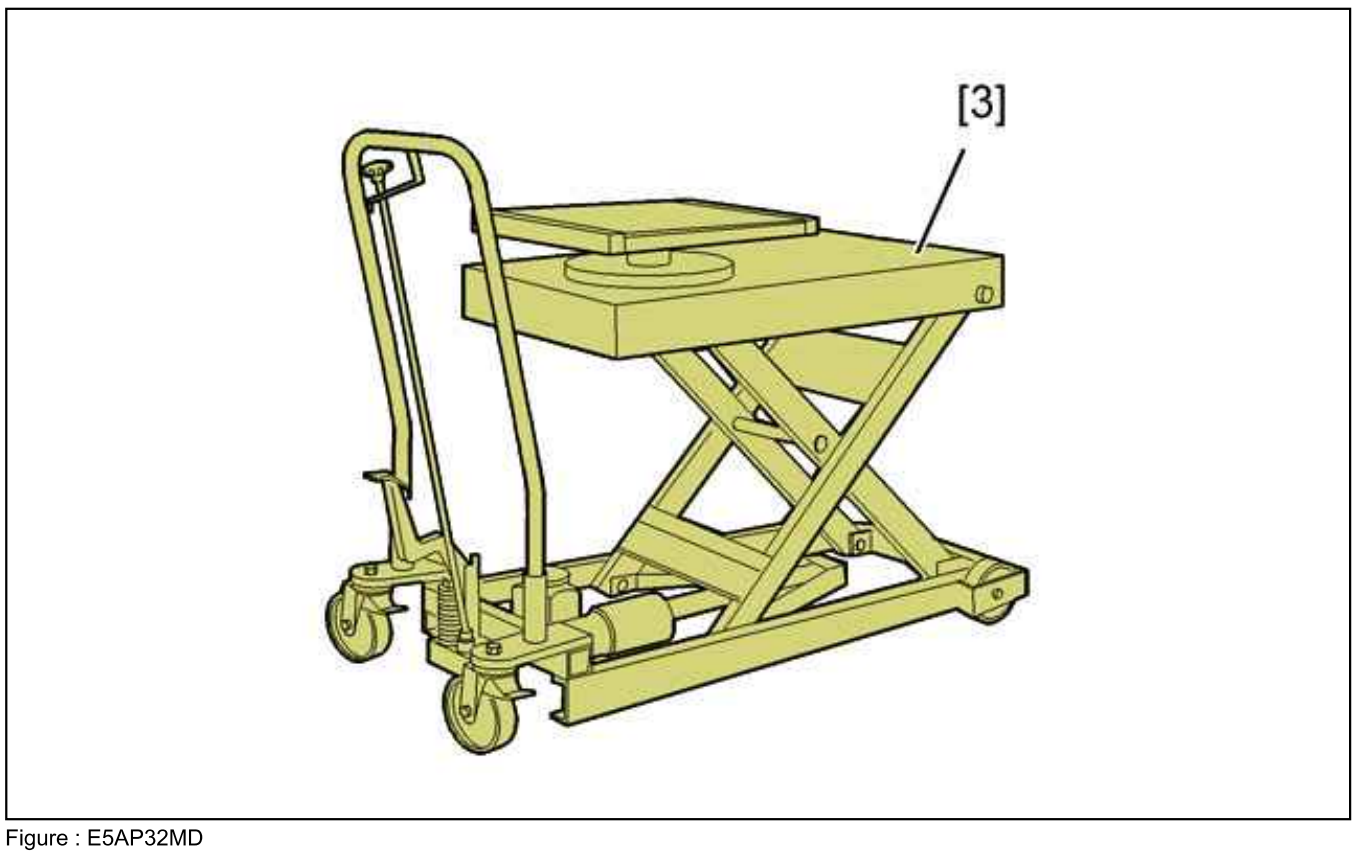

Figure : E5AP32MD

Reference	Designation	Reference	Reference
[3]	lifting bench	5702-T.A	(-).0004

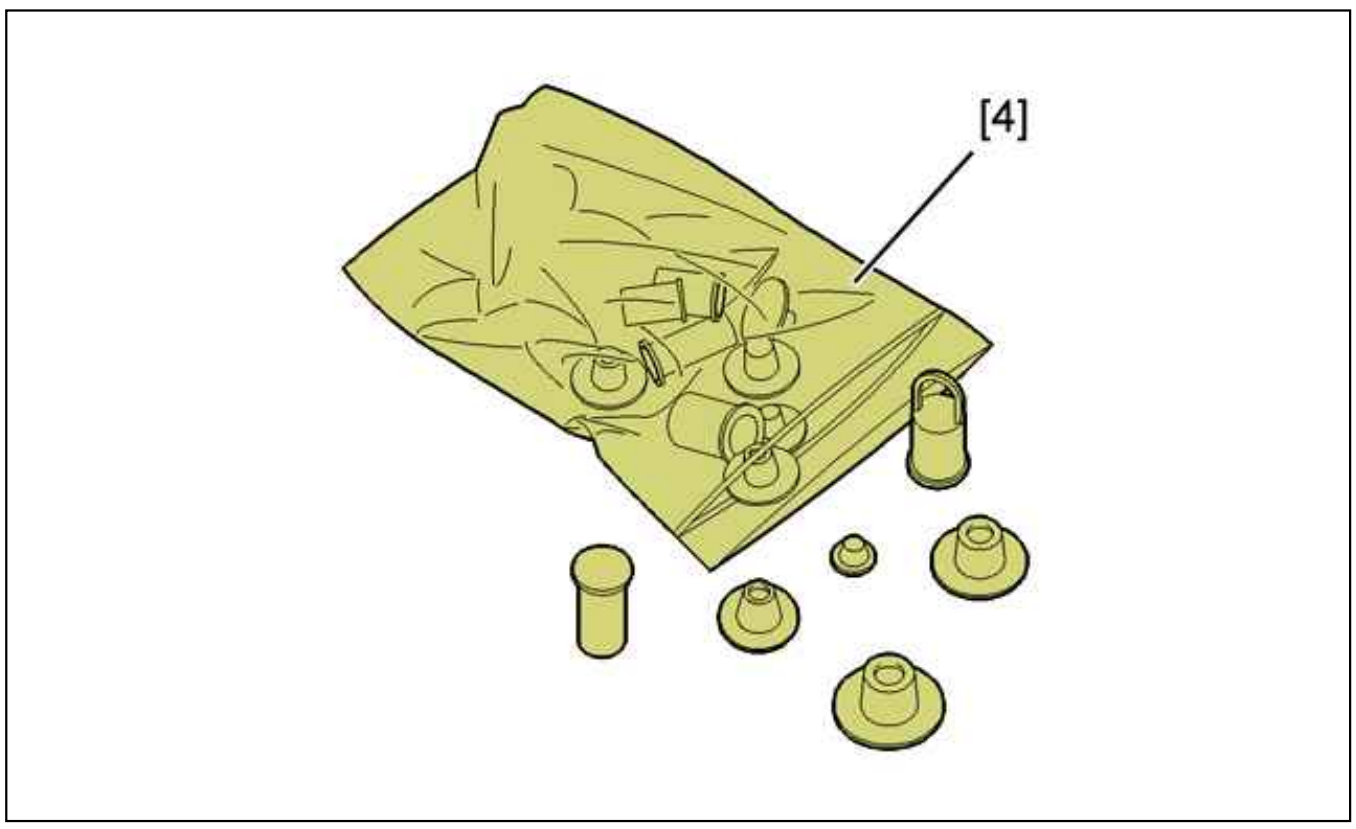

Figure : E5AP32ND

Reference	Designation	Reference	Reference
[4]	plugs kit	(-).0188 T	(-).0188 T

2. Removing

ESSENTIAL : Respect the safety and cleanliness recommendations that are specific to high pressure diesel injection (HDi) engines .

CAUTION : After switching off the ignition: wait 15 minutes before disconnecting the battery, to ensure that the initialisations of the various ECUs are memorised.

Disconnect the battery.
Place the vehicle on a 2-post lift.

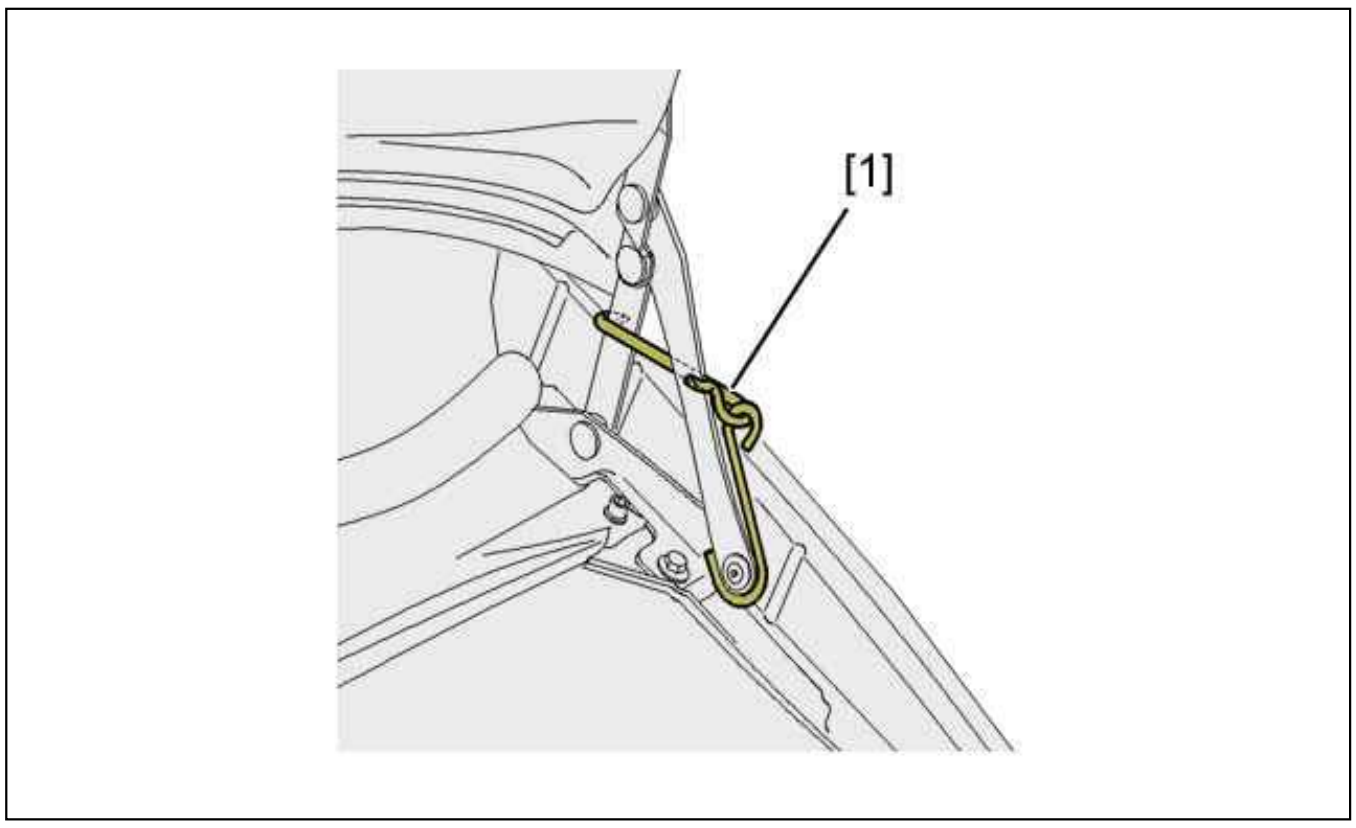

Figure : B1BPRWYD

Put the bonnet in the vertical position ; Using tool [1].
Drain :

- The engine cooling system (see the relevant operation)
- The gearbox (see the relevant operation)

Remove :

- The central section of the lower front panel (see the relevant operation)
- The right-hand headlamp (see the relevant operation)
- The front wheels
- The protective panel under the engine
- The drive shafts (see the relevant operation)
- The pre-catalytic converter (see the relevant operation)

Uncouple :

- The cooling radiator pipes
- The turbocharger air cooler pipe (right hand side)
- The heater matrix inlet and outlet hoses
- The expansion bottle pipe
- The fuel supply and return pipes

Plug the fuel supply and return pipes ; Using tool [4].

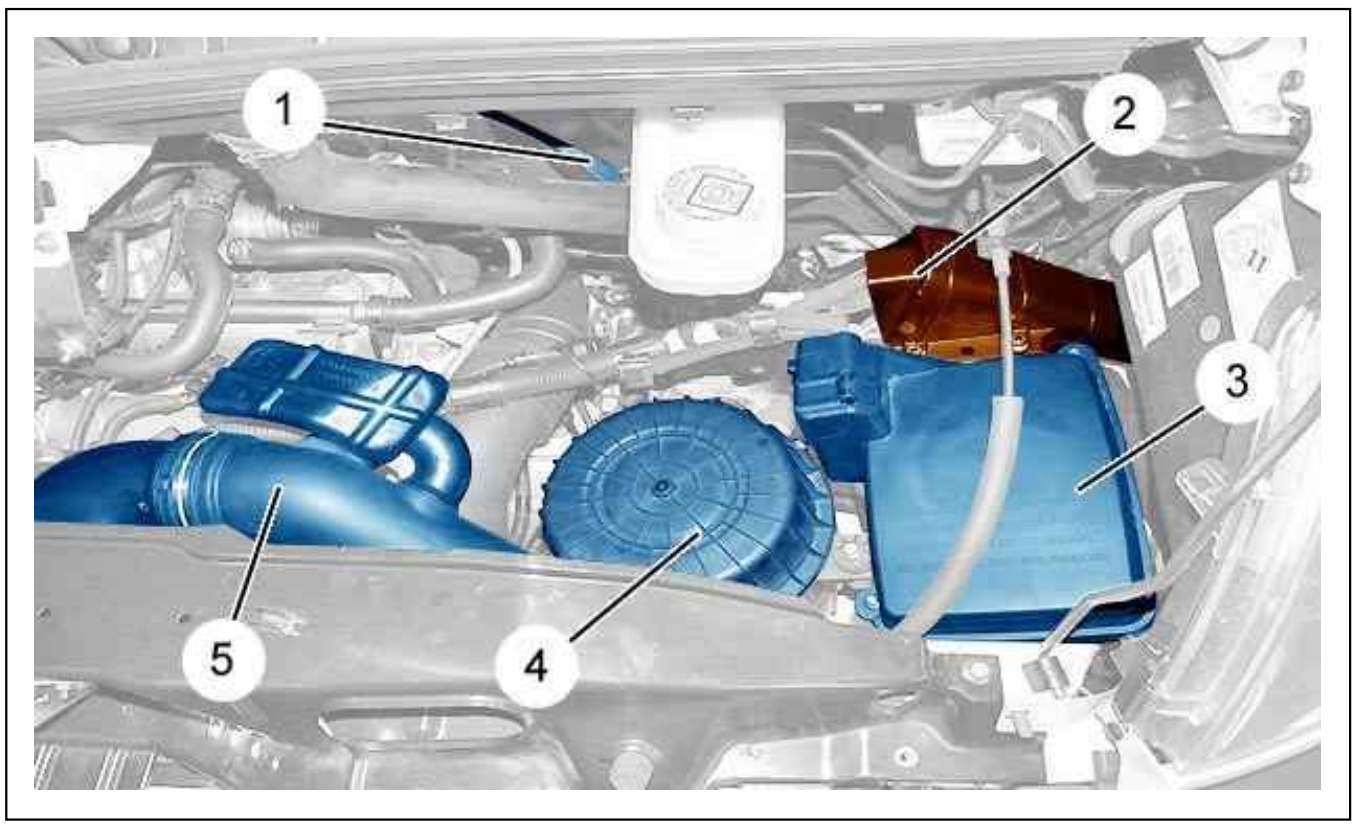

Figure : B1BM001D

Disconnect the air flow meter .
Remove :

- The braking assistance pipe (1)
- The electrical harness shield (2)
- The cover (3)
- The air filter housing (4)
- The air duct (5)

Plug the braking assistance pipe ; Using tool [4].

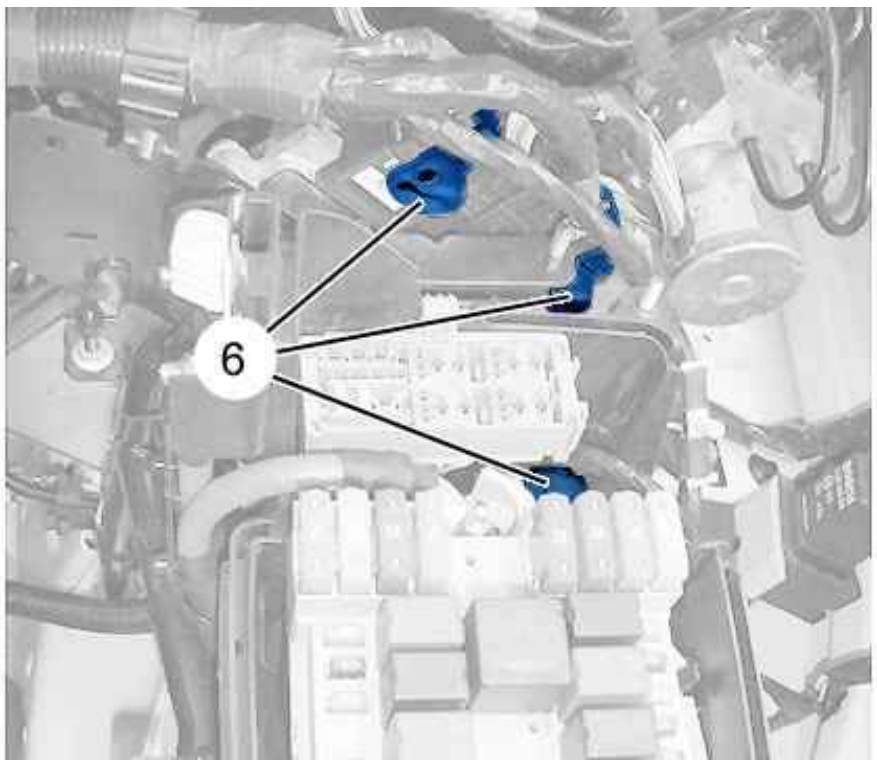

Figure : D4AM001D

Disconnect the electric harnesses (6).

2.1. Vehicle with air conditioning

Remove :

- The accessories drive belt (see the relevant operation)
- The fastening bolts of the refrigeration compressor clutch
- The clip securing the air conditioning pipes on the rear lifting plate

Move aside and suspend the air conditioning compressor on the side of the vehicle (Without opening the cooling circuit).

2.2. Subsequent operations

Lift and support the vehicle.
Detach and move aside :

- The clutch slave cylinder (euro4)
- The hydraulic stop (euro5)
- The earth cable
- The starter electrical supply
- The gear control cables

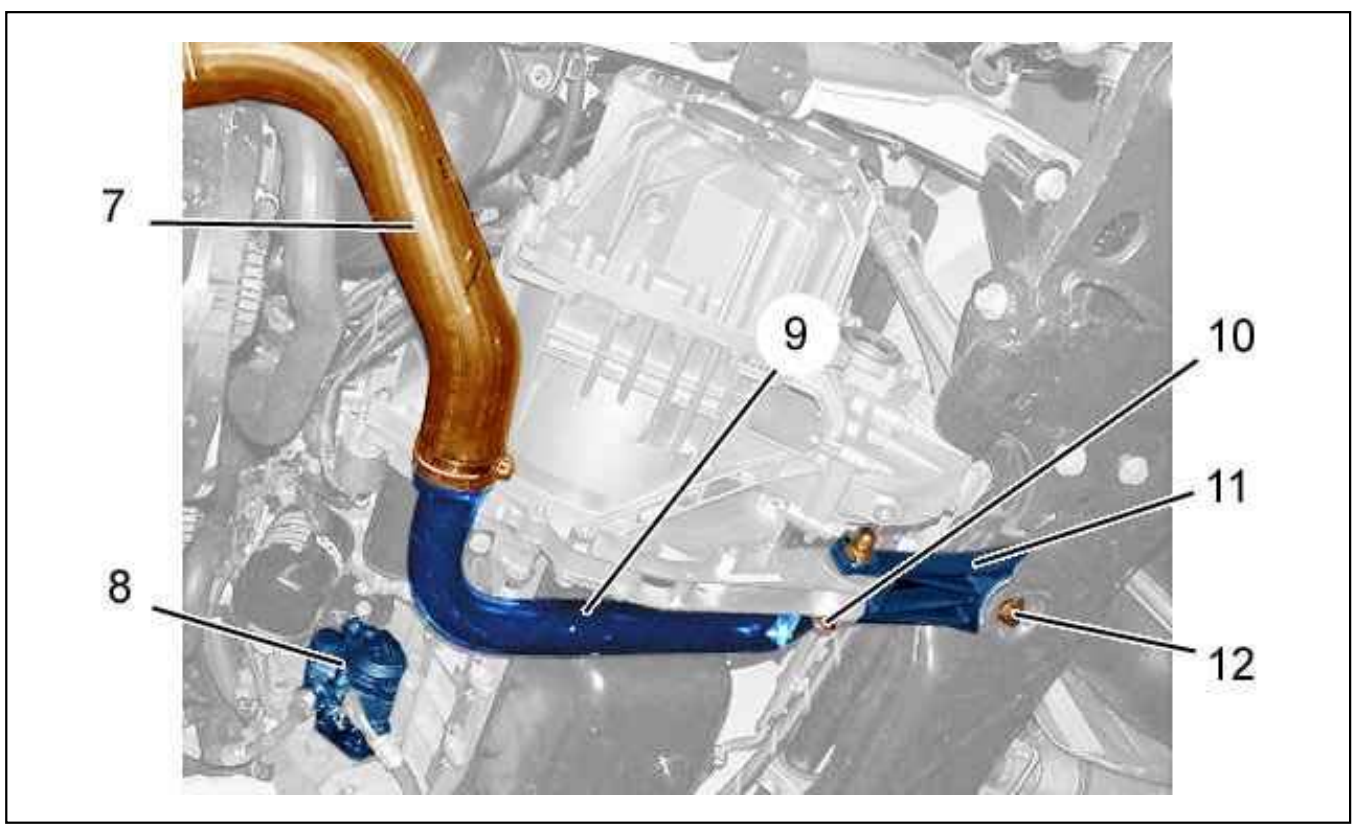

Figure : B2CM001D

Remove :

- The air duct (7)
- The air duct (9)
- The bolts (10), (12)
- The lower torque reaction link (11)
- The power steering pump (8) (see the relevant operation)

Move aside and suspend the power steering pump (8).
Put lifting table [3] together with its supports [2b], [2a] in position under the engine.
Lift the elevating platform [3].

2.3. Alternator side

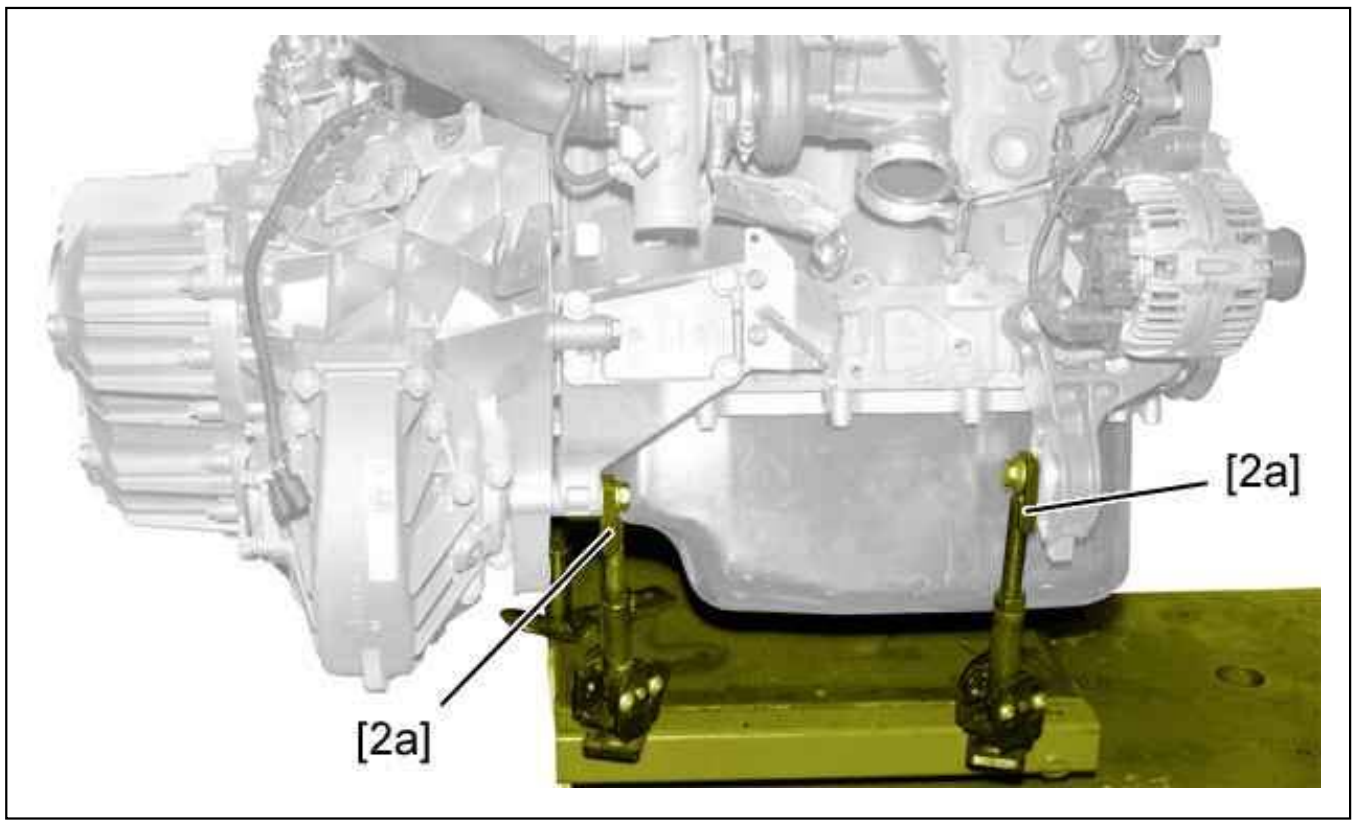

Figure : B1CM001D

Fit a support [2a] on a gearbox fixing .
Place another support [2a] in the drive shaft bearing (On the right-hand side).

2.4. Oil filter side

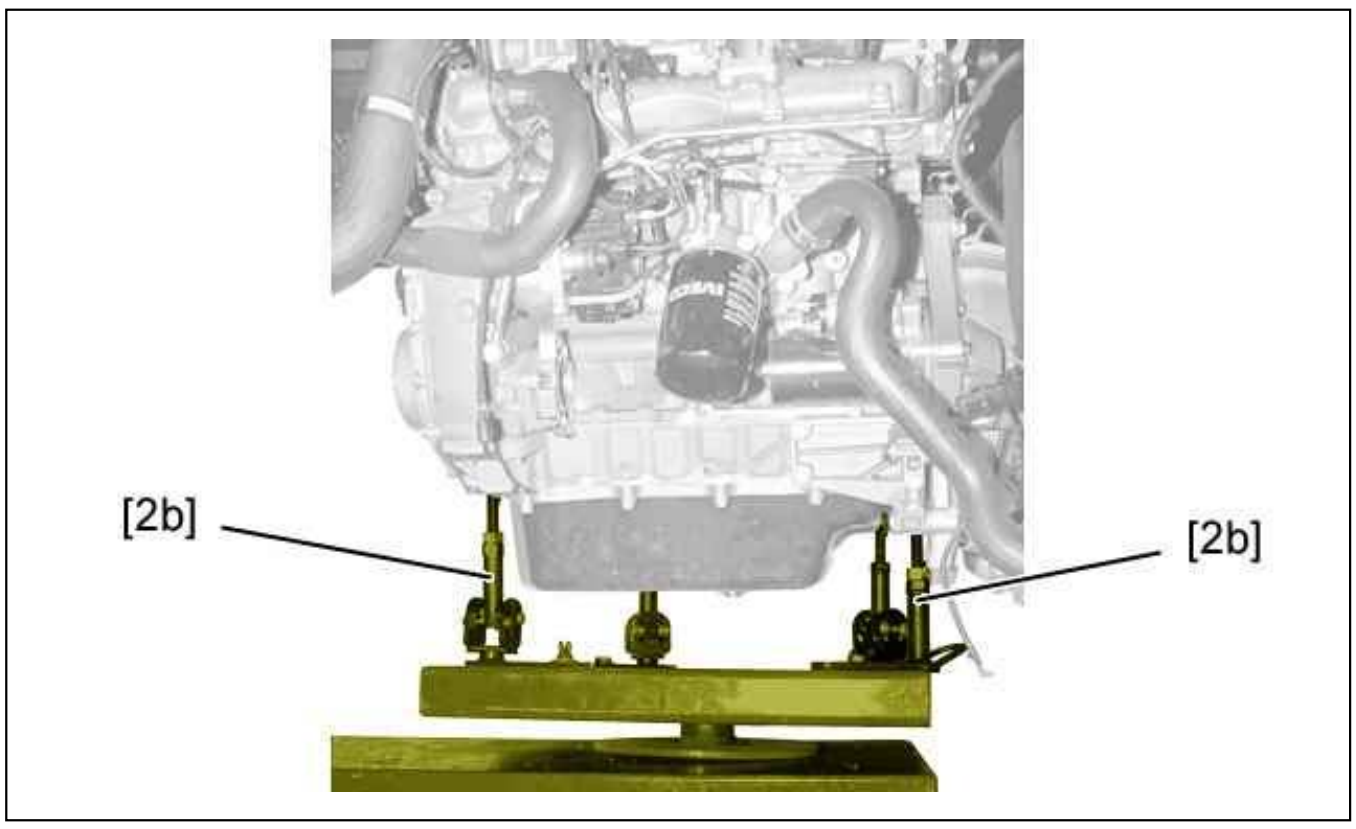

Figure : B1CM002D

Position : The tools [2b] in the recess holes of the cylinder block.

3. Removing (continued)

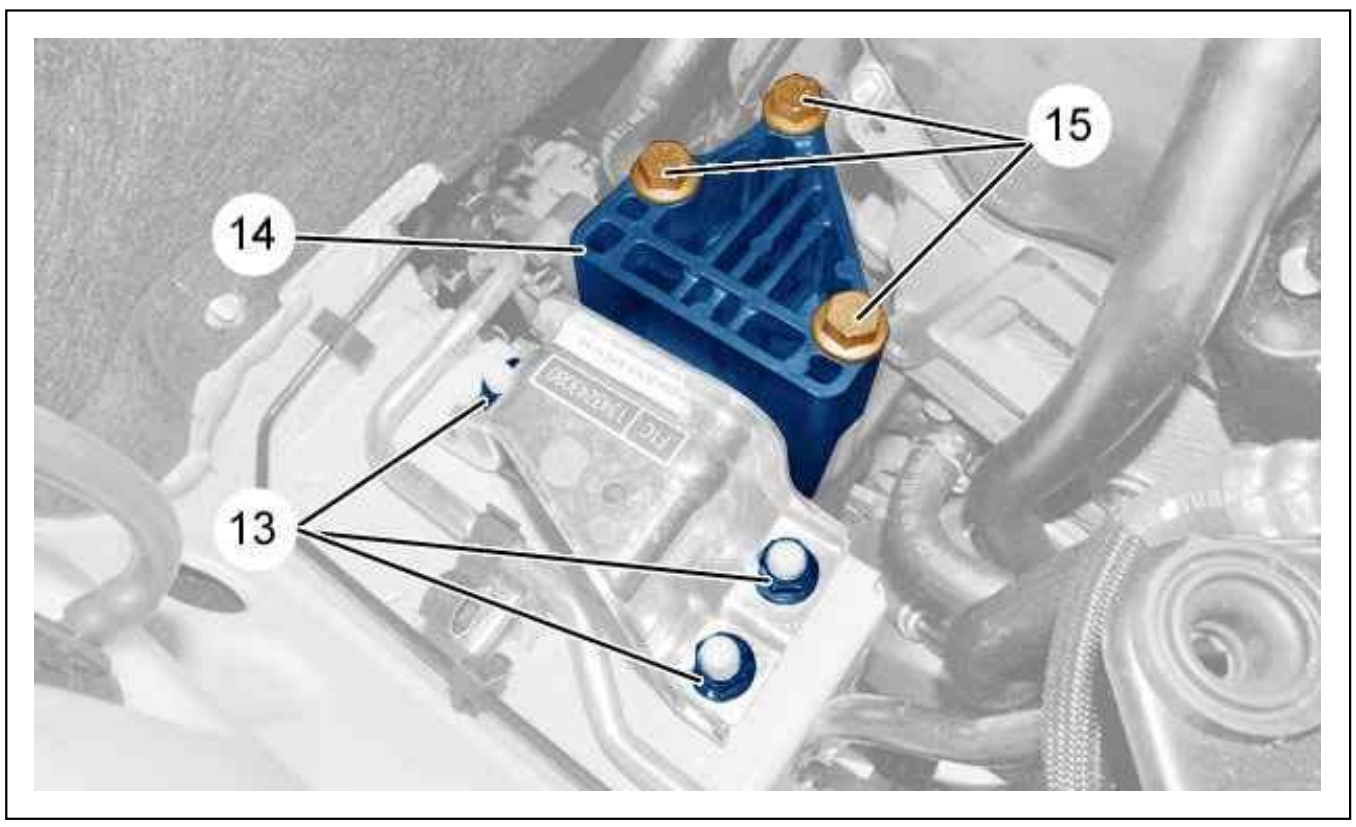

Figure : B1HM001D

Remove :

- The nuts (13)
- The bolts (15)
- The right-hand engine mounting (14)

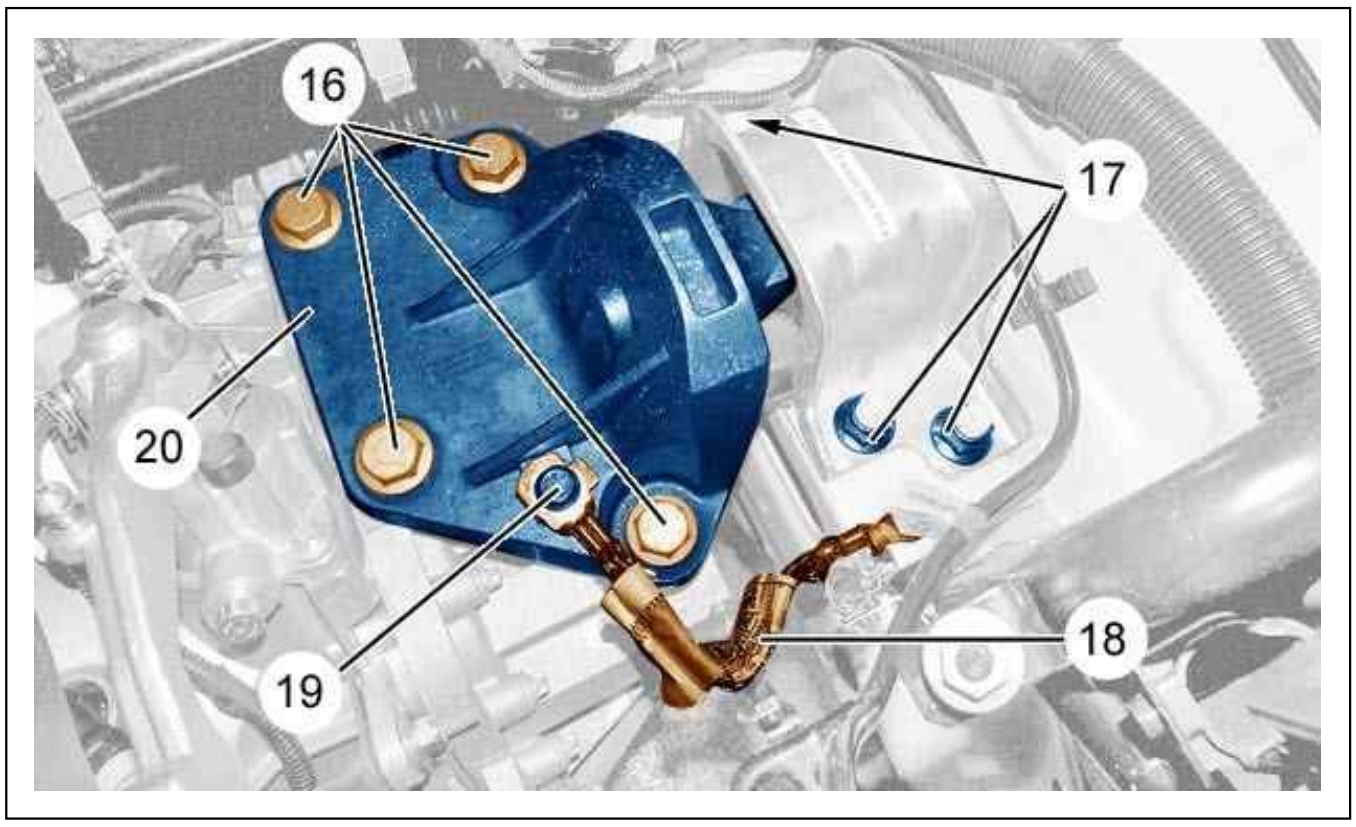

Figure : B1BM002D

Remove bolts (19).
Release : The earth braid (18).
Remove :

- The bolts (16)
- The nuts (17)
- The left-hand engine mounting (20)

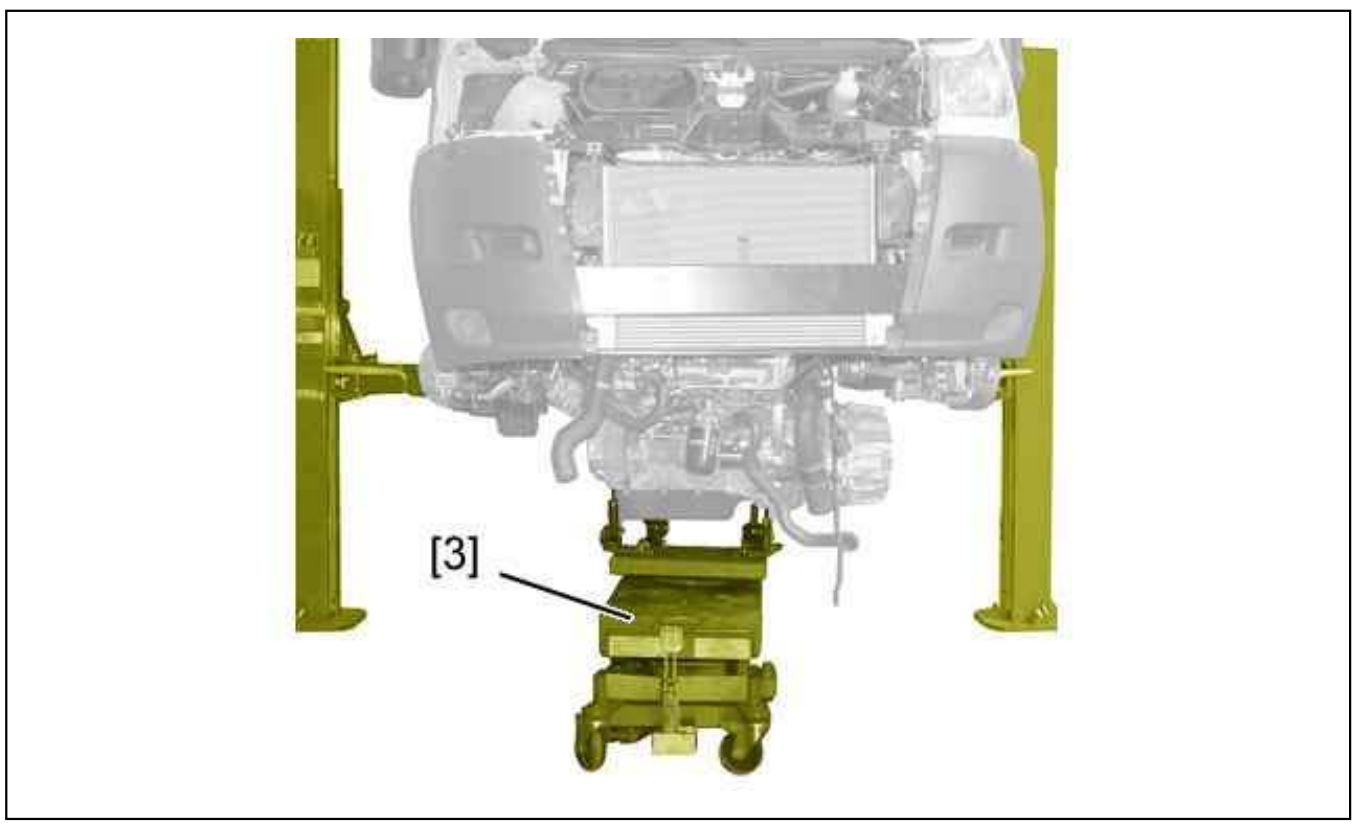

Figure : C4AM001D

CAUTION : Ensure that there is no fouling between the engine-gearbox assembly and the body.

Slowly lower the engine and gearbox assembly ; Using the lifting table [3].
Manoevre the engine-gearbox assembly to facilitate removal.
Remove the power unit assembly (from below).
Move the engine-gearbox assembly away from under the vehicle.

4. Refitting

Place the engine/gearbox assembly on the hydraulic table [3].

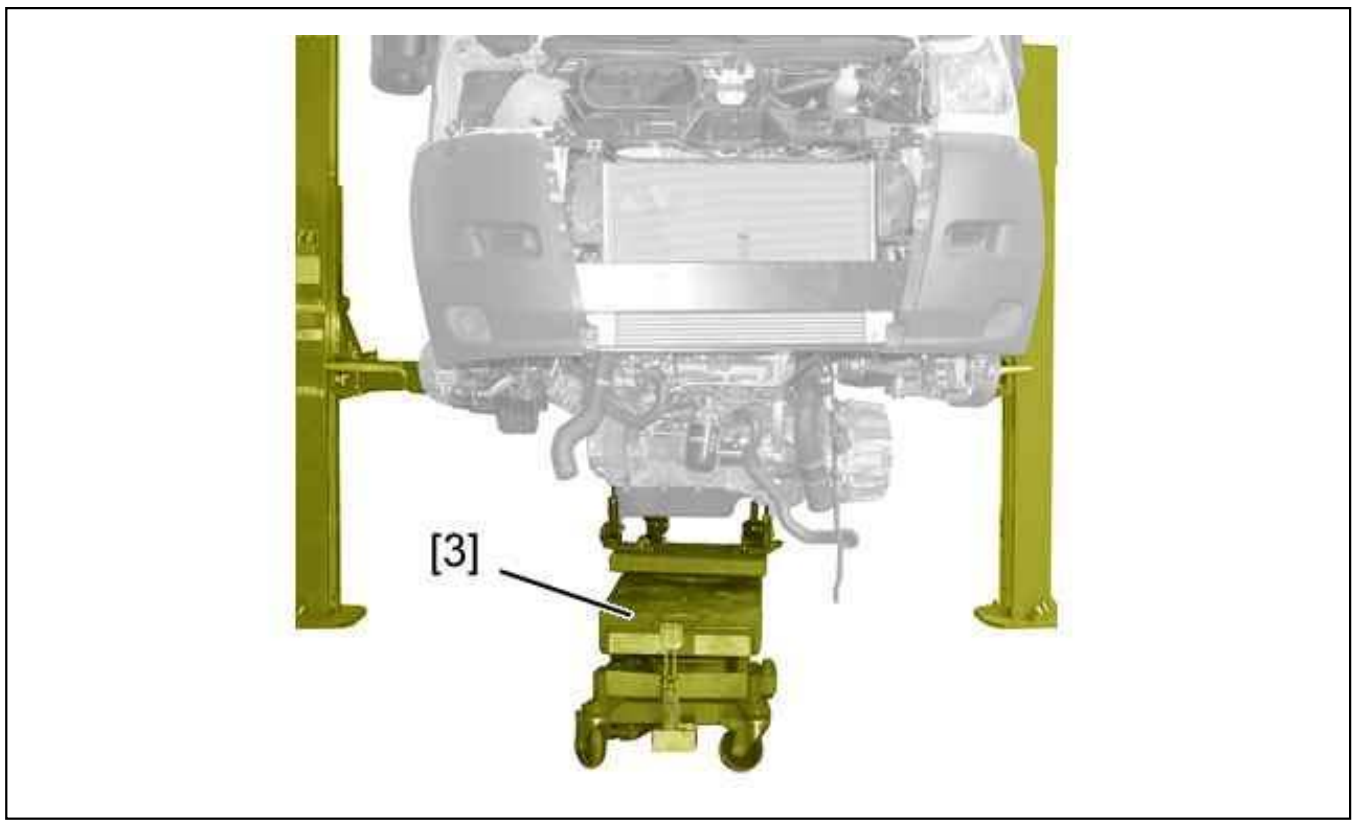

Figure : C4AM001D

CAUTION : Ensure that there is no fouling between the engine-gearbox assembly and the body. Manoevre the engine-gearbox assembly to facilitate its repositioning.

Refit the engine-gearbox assembly (from underneath the vehicle).
Refit :

- The left-hand engine mounting (20)
- The nuts (17)
- The bolts (16)

Position : The earth braid (18).
Refit bolt (19).
Refit :

- The right-hand engine mounting (14)
- The bolts (15)
- The nuts (13)

Tighten :

- The nuts (17) to 9,5 ± 0,5 daN.m
- The bolts (16) to 9,5 ± 0,5 daN.m
- The nuts (13) to 9,5 ± 0,5 daN.m
- The bolts (15) to 9,5 ± 0,5 daN.m

Unclamp the power unit assembly from the lifting table [3].
Remove the tools [2a].
Withdraw the lifting bench [3] from under the vehicle.
Refit :

- The lower torque reaction link (11)
- The (10) bolt
- The (12) bolt
- The air duct (9)
- The air duct (7)
- The power steering pump (8) (see the relevant operation)

Tighten :

- Screw (10) to 29 ± 1 daNm
- Screw (12) to 29 ± 1 daNm

Position and couple up :

- The gear control cables
- The starter electrical supply
- The earth cable
- The hydraulic stop (euro5)
- The clutch slave cylinder

Tighten the screws of the clutch slave cylinder to 2 ± 0,5 m.daN.

4.1. Vehicle with air conditioning

Position and fix : The air-conditioning compressor .
Tighten the bolts to 2,5 ± 0,25 daN.m.
Refit :

- The bracket securing the air conditioning ducts on the lifting plate
- The accessories drive belt (see the relevant operation)

4.2. Subsequent operations

Reconnect the electrical harnesses (6).
Refit :

- The air duct (5)
- The air filter housing (4)
- The braking assistance pipe (1)

- The electrical harness shield (2)
- The cover (3)

Reconnect the air flowmeter.
Couple up :

- The fuel supply and return pipes
- The expansion bottle pipe
- The heater matrix inlet and outlet hoses
- The turbocharger air cooler pipe (right hand side)
- The cooling radiator pipes

Refit :

- The pre-catalytic converter (see the relevant operation)
- The drive shafts (see the relevant operation)
- The front wheels
- The right-hand headlamp (see the relevant operation)
- The central section of the lower front panel (see the relevant operation)
- The protective panel under the engine

Fill and top up the level of the following of the following elements :

- engine
- gearbox (see the relevant operation)
- Cooling system (see the relevant operation)

CAUTION : Perform the operations to be carried out following reconnection of the battery.

Reconnect the battery.
Start the engine.
Top up the coolant level (If necessary).
Remove the tool [1].
Return the vehicle to its wheels.
Carry out :

- A road test
- A reading of the diagnostic memories

GENERAL SPECIFICATIONS : CLUTCH

1. Application

engine	gearbox	Engine flywheel
PUMA 100 (4HV)	MLGU5	With single engine flywheel
PUMA 120 (4HU)	MLGU6	With double engine flywheel

2. Data

	Clutch mechanism		Clutch friction plate			Stop
engine	make	Type	External diameter	Internal diameter	Lining	make
PUMA 100 (4HV)	LUK	240 P 6700	239 mm	155 mm	810 DS	SKF
PUMA 120 (4HU)	LUK	255 P 8100	254 mm	165 mm	810 DS	SKF

3. Special features

LUK clutch discs do not have damper hubs.
The noise generated by the gearbox is filtered by the double damping flywheel (DVA) and not by the clutch disc hub.
On the MLGU6 gearbox The LUK clutch mechanism includes an automatic wear adjustment device that requires a special tool for refitting.

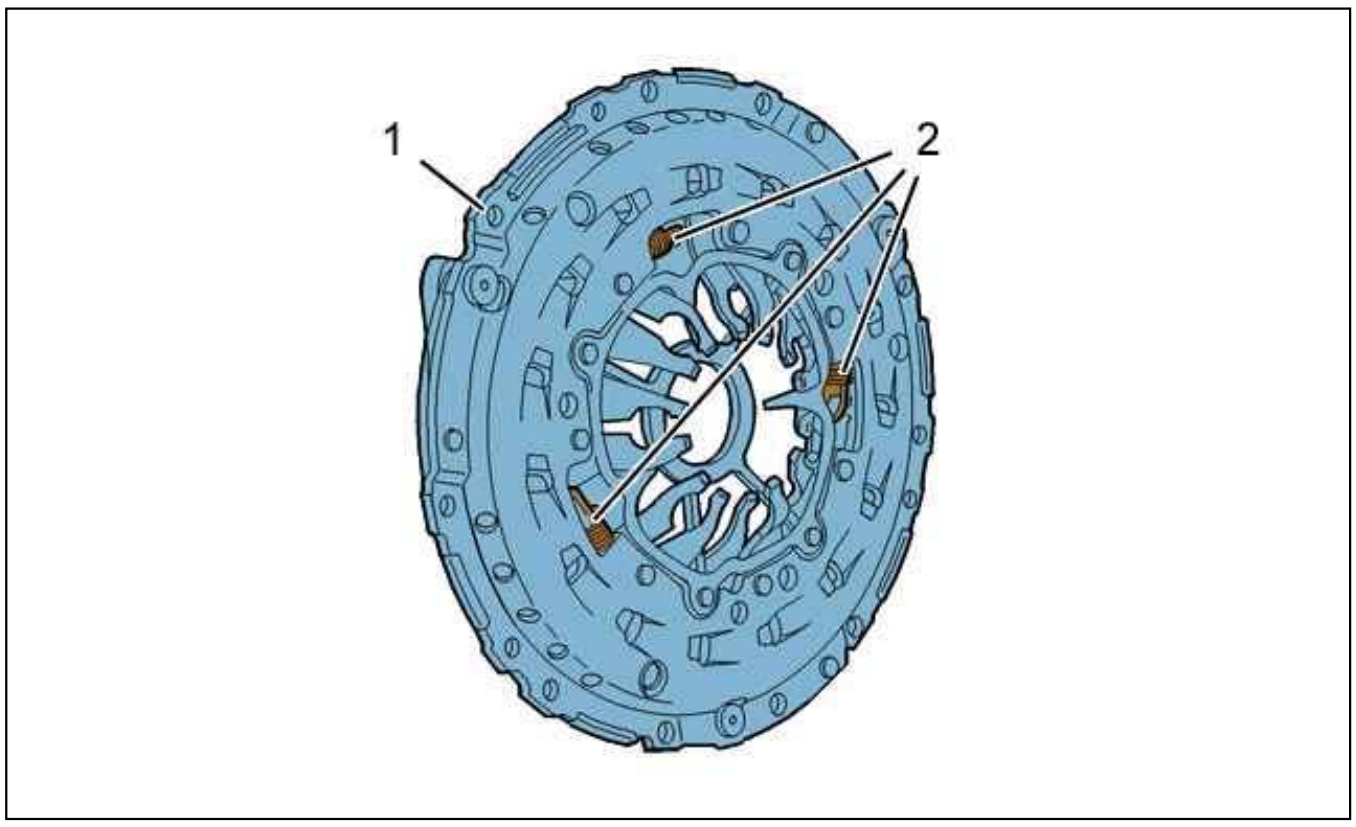

Figure : B2BP2PYD

(1) Automatic play adjustment mechanism.
(2) Compensation springs.

N.B. : When refitting, place the face of the clutch disc, where the N° PSA 96 XXX XXX 80 is marked, gearbox end.

TIGHTENING TORQUE : CLUTCH

1. Clutch mechanism

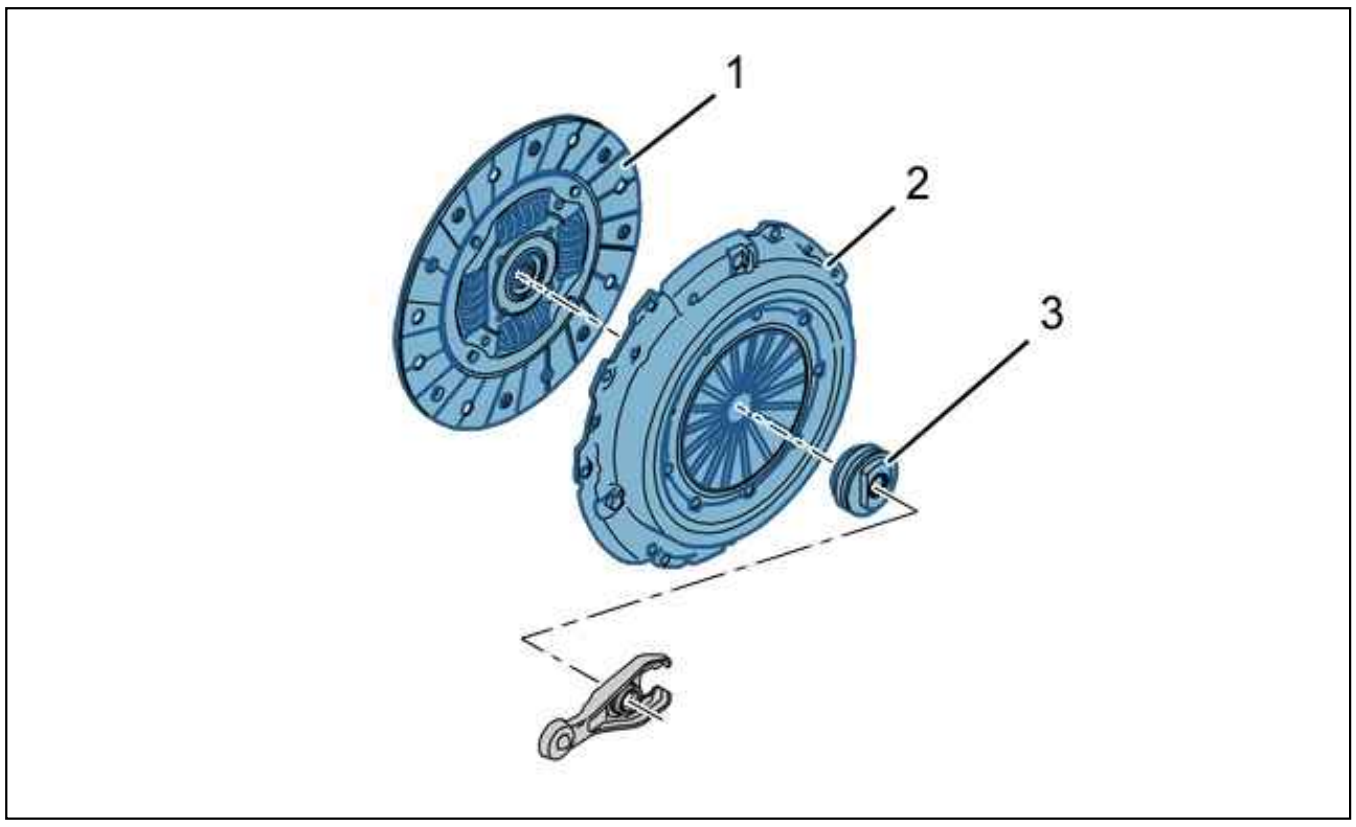

Figure : B2BP2PZD

(1) Clutch friction plate.
(2) Clutch mechanism.
(3) clutch release bearing.
Mounting of the clutch pressure plate on the flywheel : Tightening torque to 2 da.Nm.

2. Engine flywheel

N.B. : Tighten the screws "crosswise".

2.1. With single engine flywheel : MLGU5 gearbox

Tightening torque :

- Pre-tightening to 2,5 daNm
- Tighten to 4 daN.m

2.2. With double engine flywheel : MLGU6 gearbox

Tightening torque :

- Pre-tightening to 1,5 daNm
- Tighten to 4 daN.m

2.3. For the SOFIM 2.3 L engine

Tightening torque :

- Mounting of the clutch pressure plate on the flywheel : Tightening torque to 2,7 da.Nm
- Flywheel bolts
- Pre-tightening to 3 daNm
- Tighten to 90 °

IDENTIFICATION - DATA : CLUTCH

1. Application

engine	gearbox	Engine flywheel
PUMA 100(4HV)	MLGU5	With single engine flywheel
PUMA 120(4HU)	MLGU6	With double engine flywheel
Sofim 3.0(F1C)	M40	With double engine flywheel

2. Data

	Clutch mechanism		Clutch friction plate			clutch release bearing
engine	make	Type	External diameter	Internal diameter	Lining	make
PUMA 100(4HV)	LUK	240 P 6700	239 mm	155 mm	810 DS	SKF
PUMA 120(4HU)	LUK	255 P 8100	254 mm	165 mm	810 DS	SKF
SOFIM 3.0(F1C)	LUK	270 P	269 mm	161 mm	810DS	SKF

3. Special features

LUK clutch discs do not have damper hubs.
The noise generated by the gearbox is filtered by the double damping flywheel (DVA) and not by the clutch disc hub.
Gearboxes MLGU6, M40 : The LUK clutch mechanism includes an automatic wear adjustment device that requires a special tool for refitting.

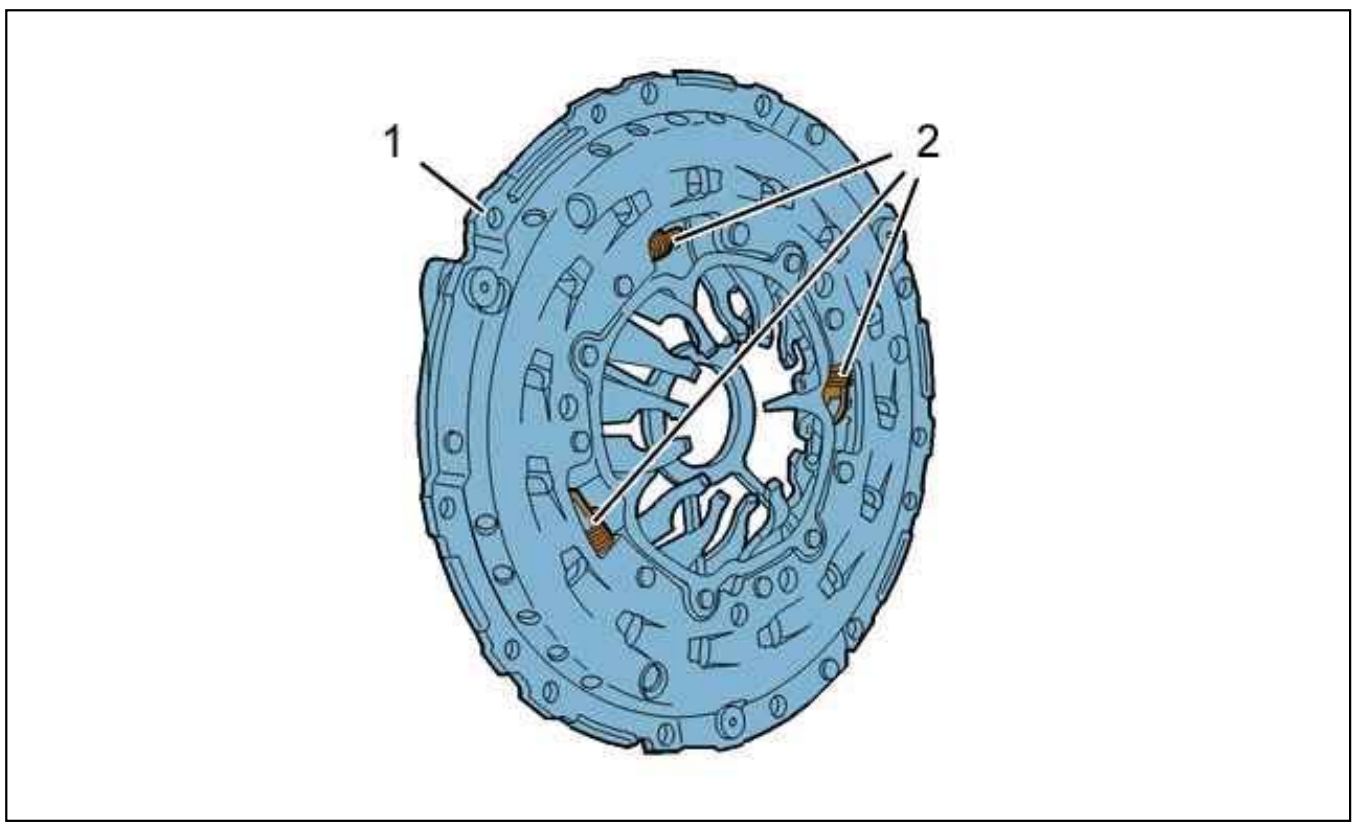

Figure : B2BP2PYD

(1)Automatic play adjustment mechanism.
(2)Compensation springs.

TIGHTENING TORQUES : CLUTCH

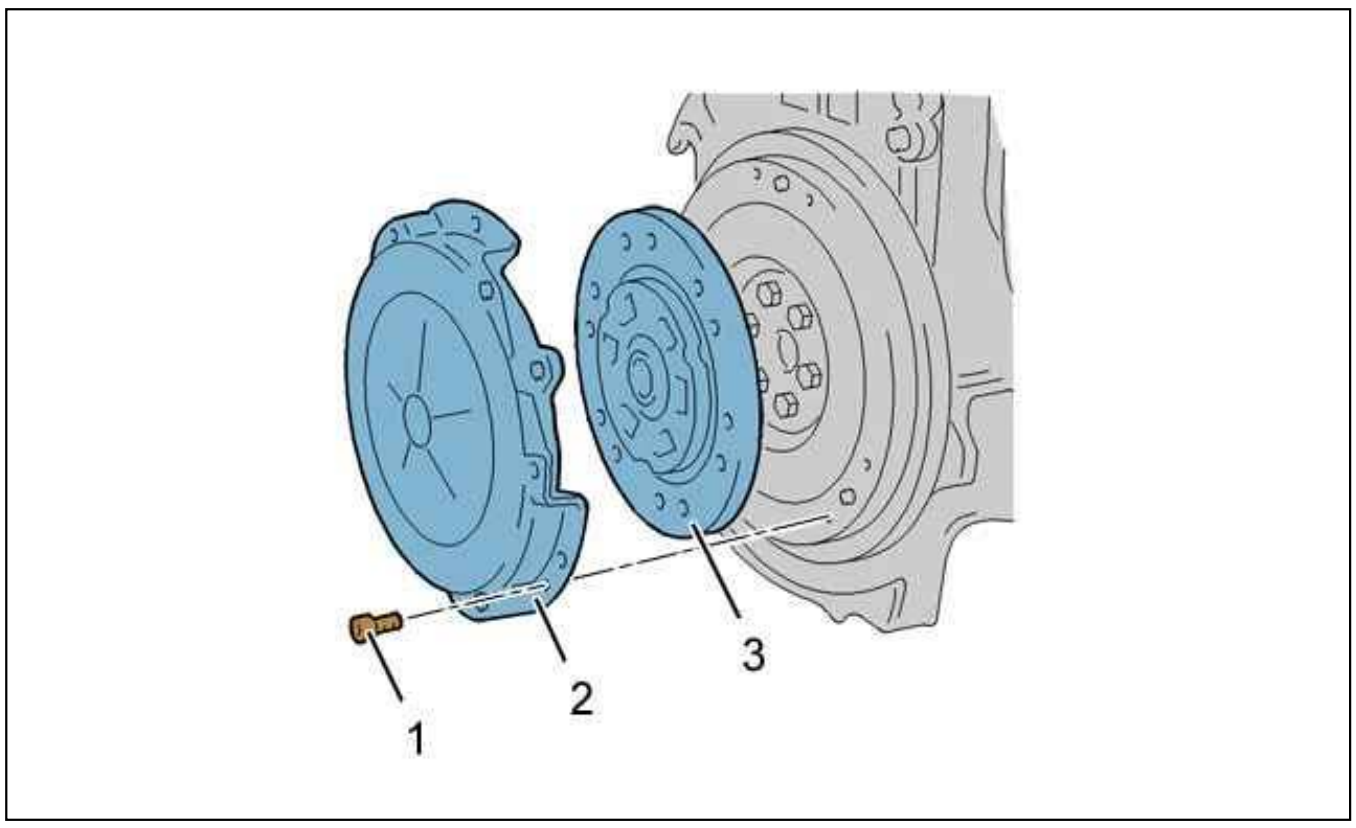

Figure : B2BP2Q0D

(1) Clutch mechanism fixing screws .
(2) Clutch mechanism.
(3) Clutch friction plate.

Reference	Designation	engine	Tightening torque
(1)	Clutch mechanism fixing screws	F1C	2.5 daNm

REMOVING - REFITTING : CLUTCH MECHANISM

ESSENTIAL : Observe the safety and cleanliness instructions .

CAUTION : In order to improve the centering of the friction plate and to eliminate engine jerks, vibrations and noise, compress the clutch mechanism wher tightening the fixing bolts ; Using tool [0217].

CAUTION : Always replace the clutch bearing when replacing the clutch mechanism or the clutch disc.

1. Tooling

Tool	Reference	Description
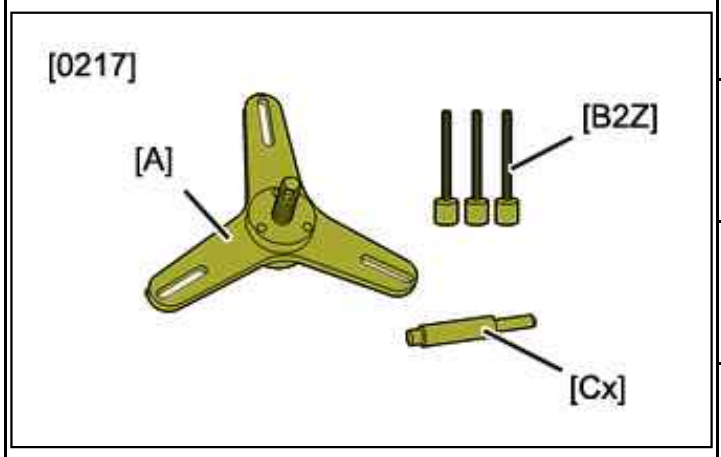 Figure : E5AG04PT	[0217]	Clutch mechanism compression tool
	[0217-A]	Clutch mechanism compressor
	[0217-B2Z]	Retaining rod (Ø 8 mm)
	[0217-Cx]	Clutch centring drift (According to gearbox (see table below))

Clutch centring drift							
Engine types	[0217-C1]	[0217-C2]	[0217-C3Z]	[0217-C4]	[0217-C5Z]	[0217-C6Z]	[0217-C7]
DV4		BE	MA/MAP				
DV4 C						MA/MAP	
DV6	MCM	BE	MCP				
DV6UC			BE				
DV6DU (M)			BE				
DV6C (M)			MCP/ML		MCP/MCM	BE	
DV6D (M)			BE/MCP		MCP		
DV6E (M)			BE				
DW10	ML/BE		MCP		MCP		
DW12	ML						W6MBA
4B12							W5MBA
EB0			MA				
EB2			MA/MAP				
EB2M			MA/MAP				
EC5			MA			BE	
EP3 - EP3C			BE/MA/MAP				
EP6 - EP6C (M)			BE/MA/MCM/ MCP				
EP6CDTR					MCM		
EP6DTS					MCM		
EP6CDT			MCP		MCM/MCP		
EP6CDTX					MCM		
ES9				ML			
ET3			MA/MAP				
EW10						BE/MCP	
EW12						BE	
EW6						BE	
EW7						BE	
TU1			MA				
TU3			MA/MAP				
TU5			MA/MAP			BE	
SOFIM	MLGU5			M40			
PUMA	MLGU5/MLGU6						
1,3 DTE					MTM/MTA		

2. Removing

Remove the gearbox.

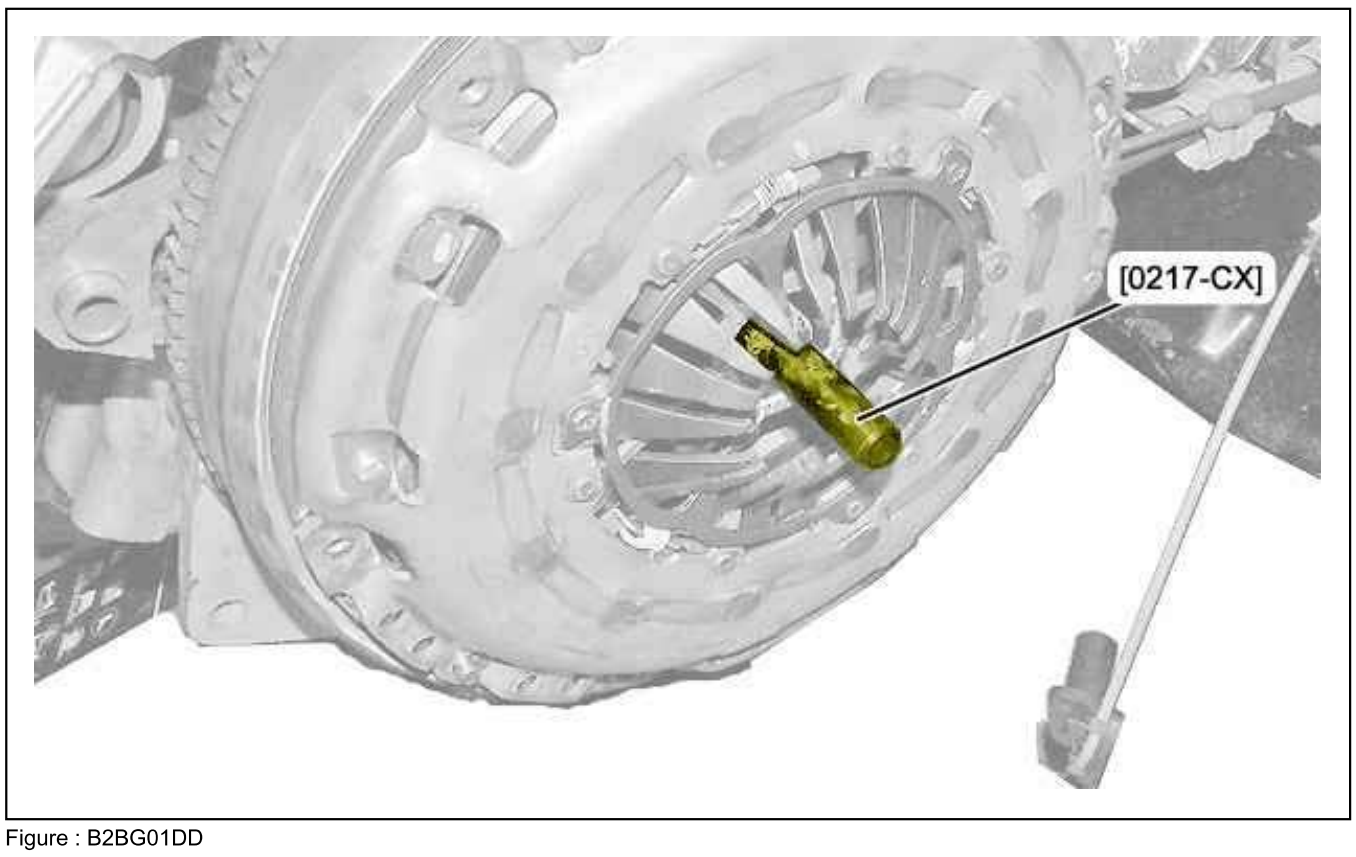

Figure : B2BG01DD

Fit the tool [0217-CX].

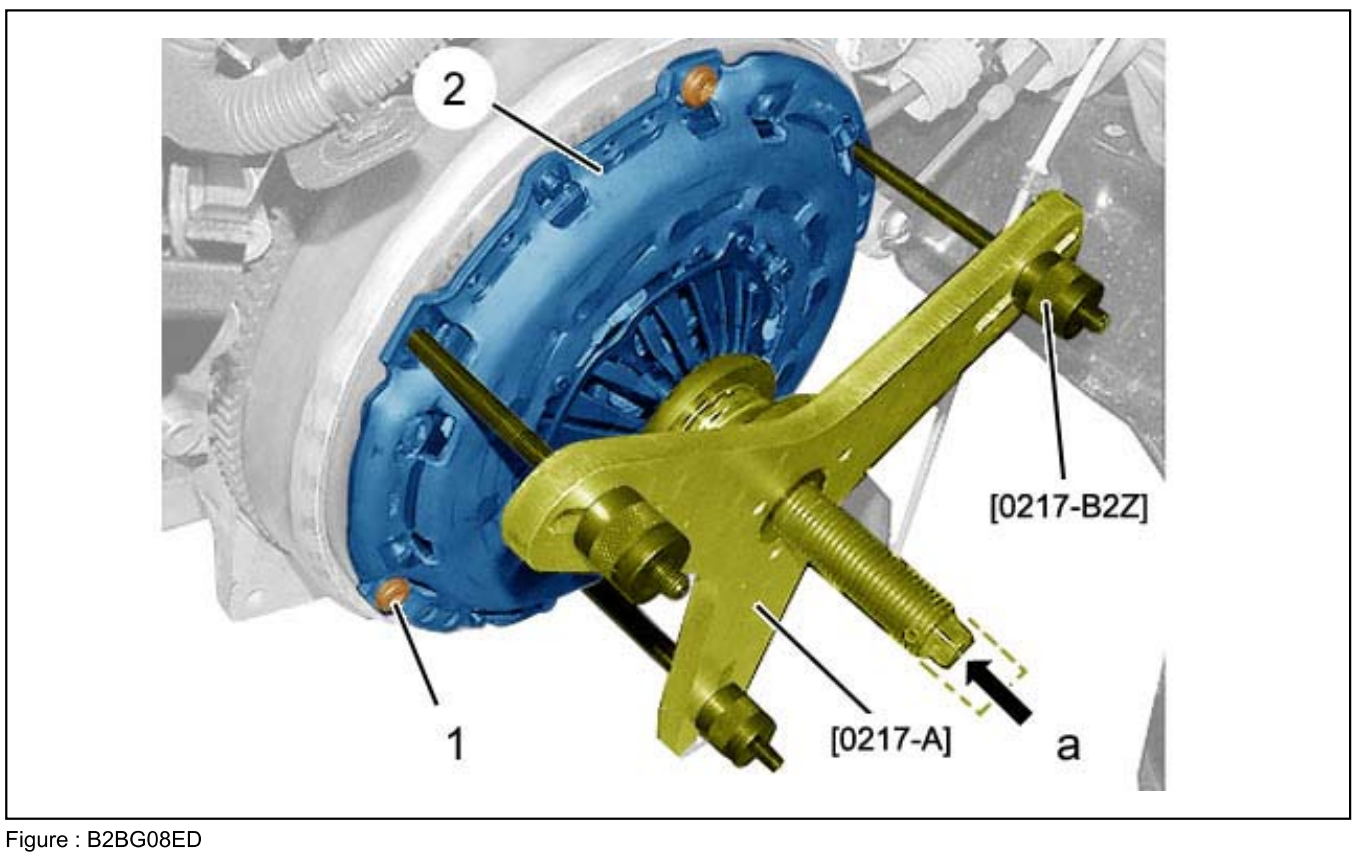

Figure : B2BG08ED

Remove the 3 bolts (1) (Every second bolt).
Position the tools [0217-A] and [0217-B2Z] on the clutch mechanism (2).

CAUTION : Certains volants moteurs comportent des taraudages débouchants. Ne pas faire dépasser les filetages des 3 tiges de maintien lors du vissage Risque de déformation du volant moteur secondaire.

Screw in the 3 retaining rods [0217-B2Z] in place of the fixing screws (1) ; Ne pas faire dépasser les filetages.

CAUTION : Lors de la compression du mécanisme d'embrayage ; Ne pas franchir de point dur lors du serrage de la vis centrale de l'outil [0217-A]. Le serrage ne doit pas excéder 10 tours dans le sens horaire.

Compress the clutch mechanism (2) with the central bolt of tool [0217-A] (at "a").
Finish removing the remaining bolts (1).
Release the clutch mechanism (2) by moving the central bolt of the tool [0217-A] (at "a").
Remove tools [0217-A] and [0217-B2Z].
Remove :

- The clutch mechanism (2)
- The clutch disc

3. Preparation for removal

3.1. Checking - Cleaning

Visually check :

- The flywheel face for damage or scores
- The flywheel for wear
- The condition of the starter ring gear
- The clutch mechanism (2)

If there is oil in the clutch mechanism (2) :

- Contrôler l'état de la bague d'étanchéité du vilebrequin
- Contrôler l'état de la bague d'étanchéité de l'arbre primaire

CAUTION : Ne pas réutiliser un disque d’embrayage dont le moyeu a des traces d’oxydation ou traces de graisse.

Désoxyder et dégraisser les pièces suivantes ; Using a degreaser Index "N1" :

- The clutch housing
- The primary shaft
- The clutch bearing guide (according to equipment)
- The clutch fork (according to equipment)

N.B. : En cas de corrosion importante, utiliser une brosse métallique sans détériorer les pièces.

3.2. Greasing

CAUTION : Respecter rigoureusement l’étape du graissage.

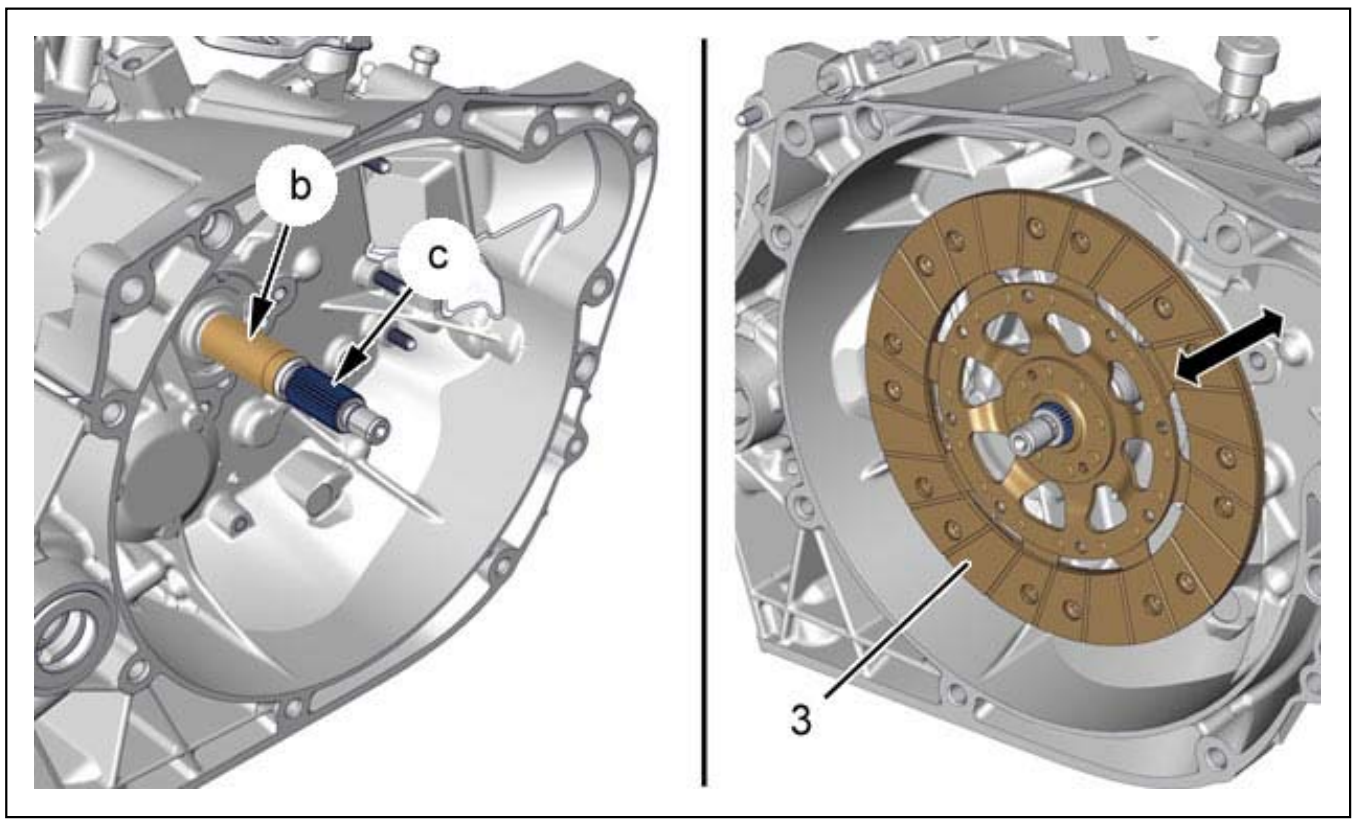

Figure : B2BG08FD

CAUTION : Protect the interior of the clutch housing from splashes of grease.

Vehicles equipped with a gearbox that has a mechanical clutch bearing Spray a little grease MOLYCOTE G-RAPID PLUS (aerosol) on the splines of th primary shaft and on the clutch bearing guide tube (at "b" and "c").
Vehicles equipped with a gearbox that has a hydraulic clutch bearing : Grease the splines of the primary shaft with MOLYCOTE G-RAPID PLUS (at "c").

CAUTION : Ne pas souiller la garniture du disque d’embrayage ; Risque de patinage.

Mettre en place le disque d’embrayage (3) sur l’arbre cannelé et effectuer plusieurs translations pour répartir la graisse.
Déposer le disque d’embrayage .

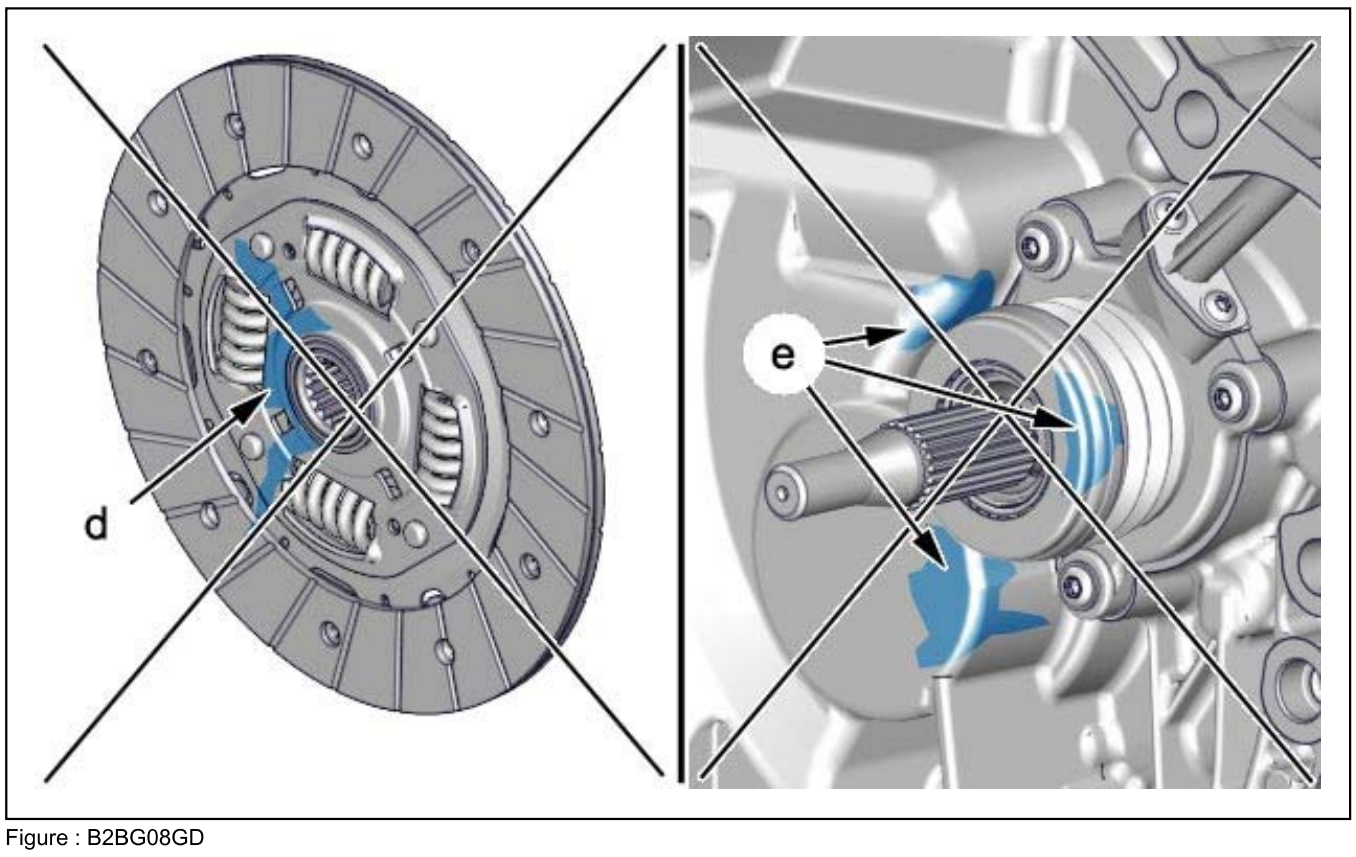

Figure : B2BG08GD

CAUTION : An excess of grease will contaminate the clutch friction plate and cause noise in neutral, slipping or juddering of the clutch.

"d" : Traces de graisse présentes sur un disque d’embrayage pollué suite à un surplus de graisse.
"e" : Traces de graisse présentes sur un carter d’embrayage pollué suite à un surplus de graisse.

CAUTION : Nettoyer toute trace de graisse susceptible d’être projetée sur la friction en rotation.

Remove the surplus grease on the top of the grooves and the end of the input shaft using a cloth.

N.B. : La pellicule de graisse déposée sur les éléments en rotation doit être la plus fine possible afin d'éviter les projections.

4. Refitting

CAUTION : Observe the tightening torque values.

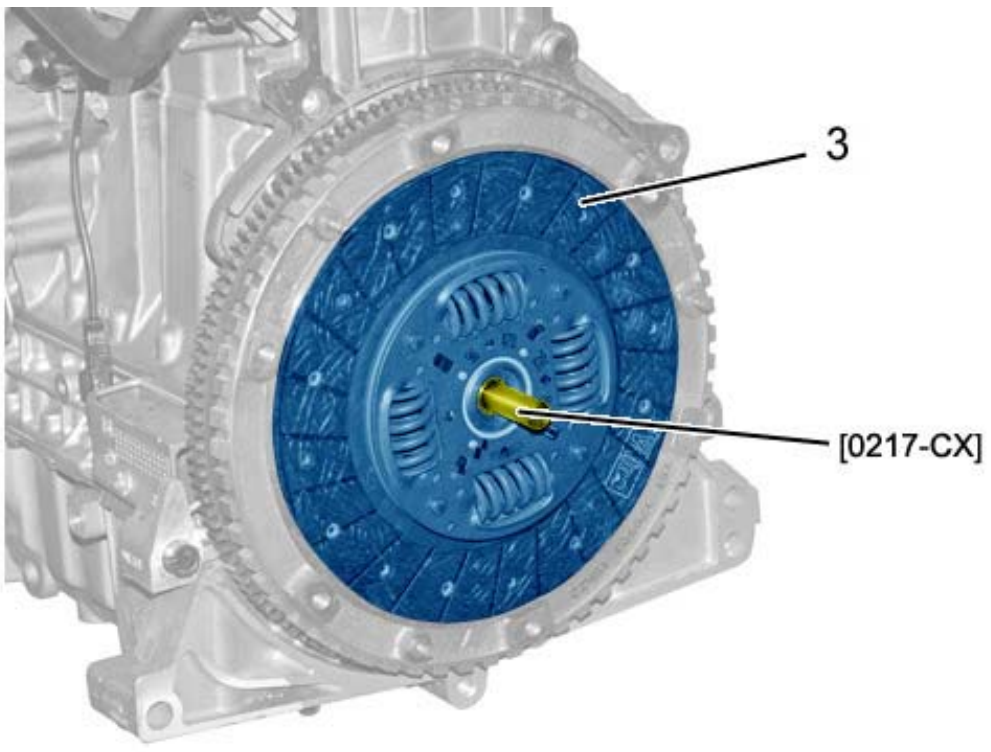

Figure : B2BG08HD

CAUTION : When refitting, place the face of the clutch disc, where the N° PSA 96 XXX XXX 80 is marked, gearbox end.

Refit the clutch disc (3).
Centre the clutch disc (3) ; Using tool [0217-CX].



Figure : B2BM01JD

CAUTION : The clutch mechanism and disc are paired at the factory and cannot be replaced separately.

CAUTION : Any fitting of a clutch mechanism with automatic free play adjustment (whether new or re-used) must compulsorily be performed using the compression tool [0217].

Refit the clutch mechanism (2).

N.B. : Do not remove the tool [0217-CX].

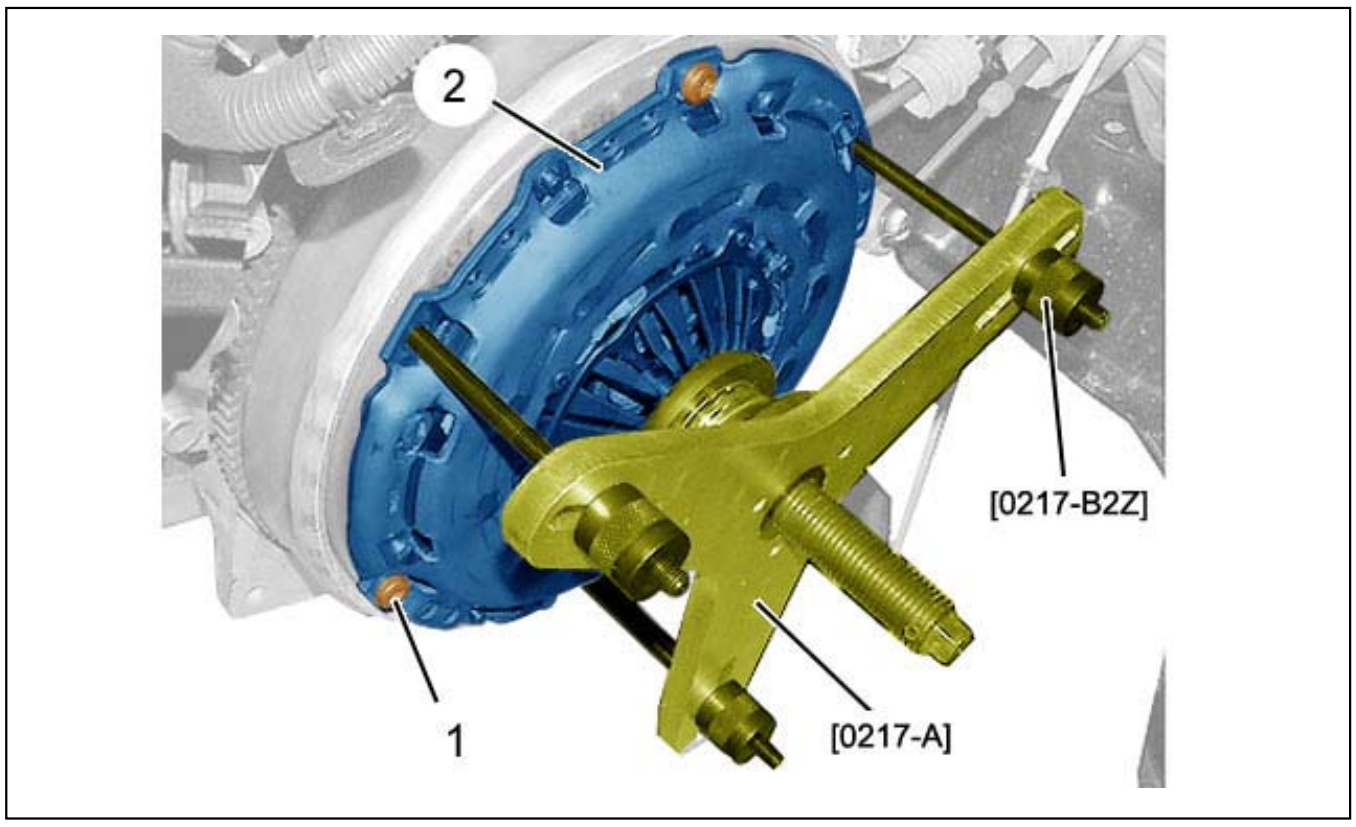

Figure : B2BG08ID

CAUTION : No resetting of the clutch wear adjustment is permitted.

Position the tools [0217-A] and [0217-B2Z] on the clutch mechanism (2).
Screw in the 3 retaining rods [0217-B2Z] in place of the fixing screws (1) ; Ne pas faire dépasser les filetages.
Tighten the 3 bolts (1) by hand.

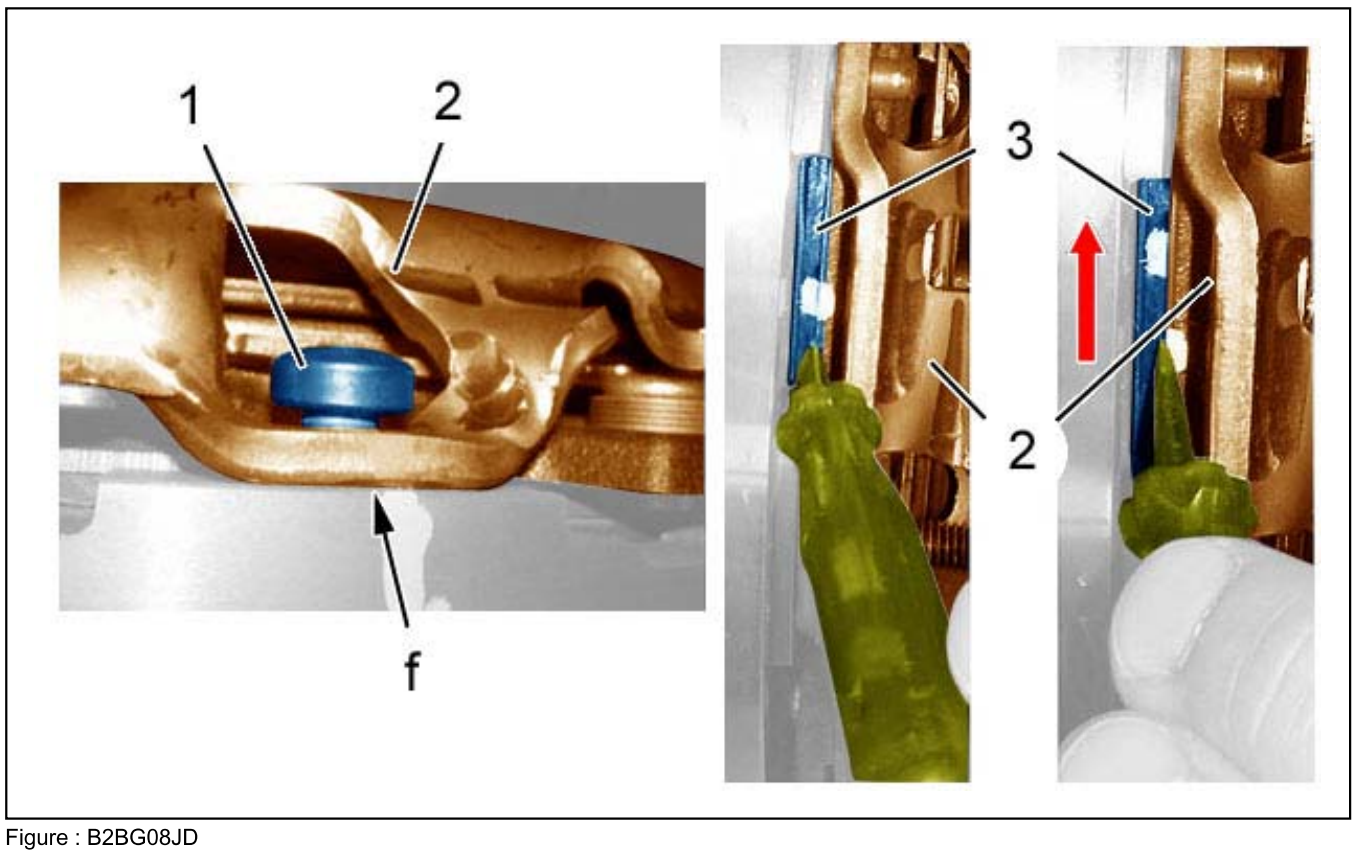

Figure : B2BG08JD

Comprimer progressivement le mécanisme d'embrayage (2) jusqu'au contact sur le volant moteur primaire (at "f").
Contrôler l'absence de friction :

- Appliquer un léger effort sur le disque d'embrayage (3) pour contrôler la rotation ; Using a thin, flat screwdriver
- En cas de rotation difficile ou impossible, poursuivre l'opération de compression du mécanisme d'embrayage très progressivement jusqu'à la rotation (1/8 ème de tour sur la vis de l'outil [0217-B2Z])

En cas d'impossibilité de contrôler l'absence de friction (disque d'embrayage inaccessible), visser la vis centrale de l'outil [0217-B2Z] de deux tours supplémentaires au maximum.
Tighten the 3 bolts (1) to the specified torque.
Unscrew the centre bolt of the tool [0217-A] (at "a") by several turns to detension the clutch mechanism (2).
Remove tools [0217-A], [0217-B2Z] and [0217-CX].
Refit and tighten the remaining 3 bolts (1).
Refit the gearbox.

REMOVING - REFITTING : HYDRAULIC CLUTCH CONTROL

ESSENTIAL : Observe the safety and cleanliness recommendations .

1. Preliminary operations

Remove the air filter and air inlet duct assembly.

CAUTION : Mark the level of brake fluid in the reservoir before carrying out the operation.

Remove the brake fluid reservoir cap .

1.1. Assembly with hydraulic clutch control slave cylinder

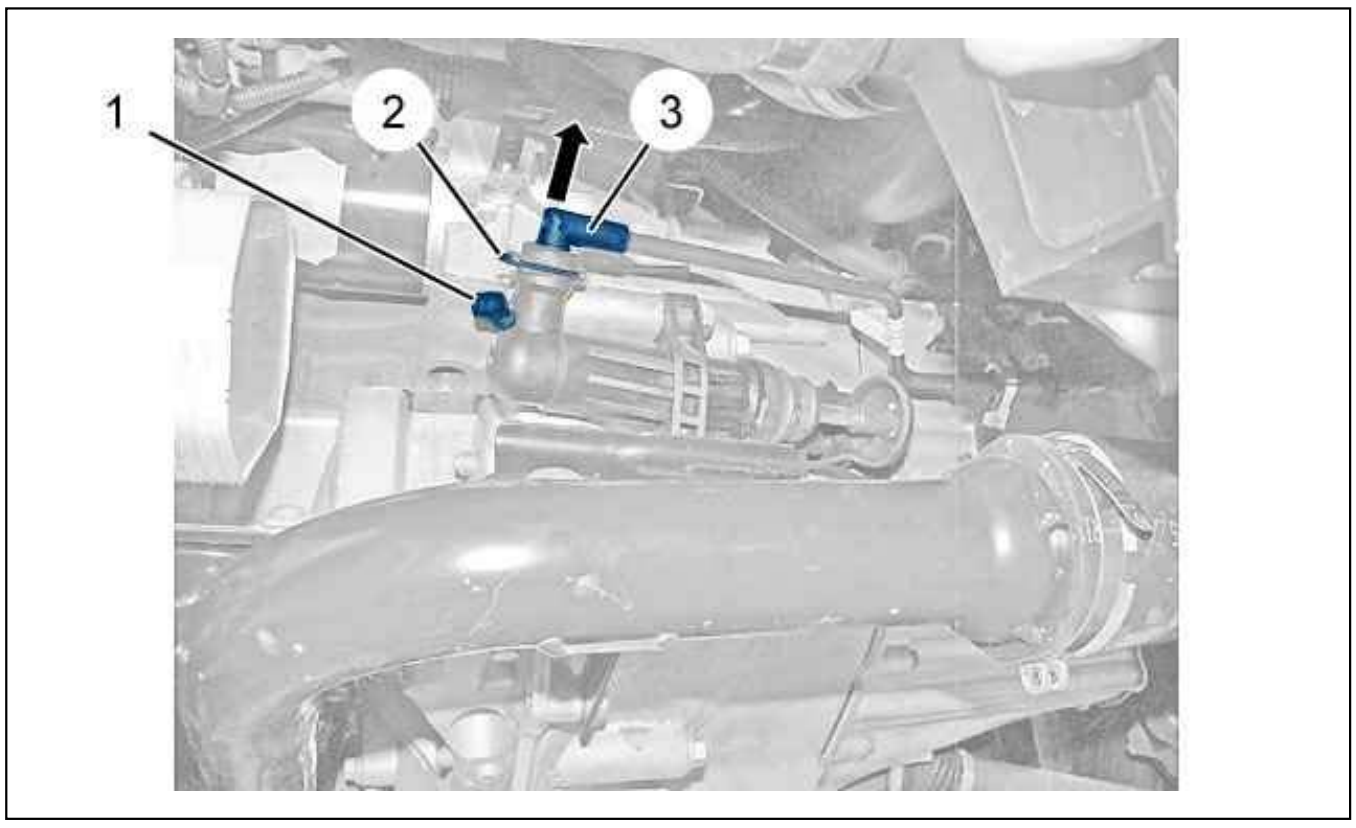

Figure : B2BI00JD

CAUTION : The end of the transparent pipe must be submerged into the brake fluid.

Drain the hydraulic clutch control circuit :

- Couple a transparent pipe onto the bleed valve (1)
- Plunge the end of the transparent pipe into a receptacle containing brake fluid, placed lower down than the hydraulic clutch control slave cylinder
- Press the locking clip (2)
- Pull the clip (3) by one notch in the direction of the arrow (open position)

1.2. Fitting with hydraulic stop

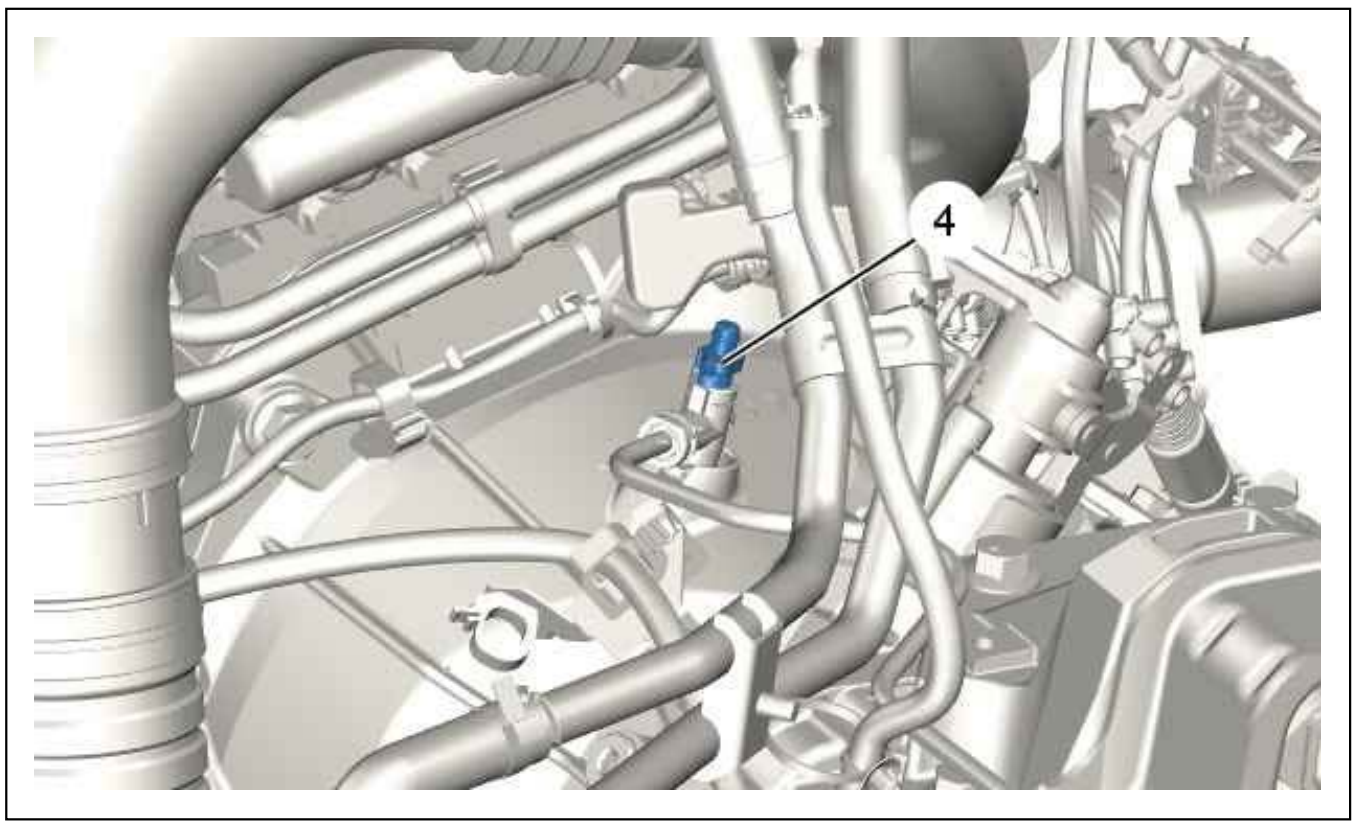

Figure : B2BG046D

Couple a transparent pipe onto the bleed valve (4).

CAUTION : The end of the transparent pipe must be submerged into the brake fluid.

Plunge the end of the transparent pipe into a receptacle containing brake fluid, placed lower down than the hydraulic clutch control circuit bleed.
Open the bleed valve (4).
Action the clutch pedal manually to drain the hydraulic clutch control circuit.

Close the bleed valve (4).
Uncouple the transparent pipe from the bleed valve (4).

2. Removing

Remove :

- The cover under the steering wheel
- The floor carpet

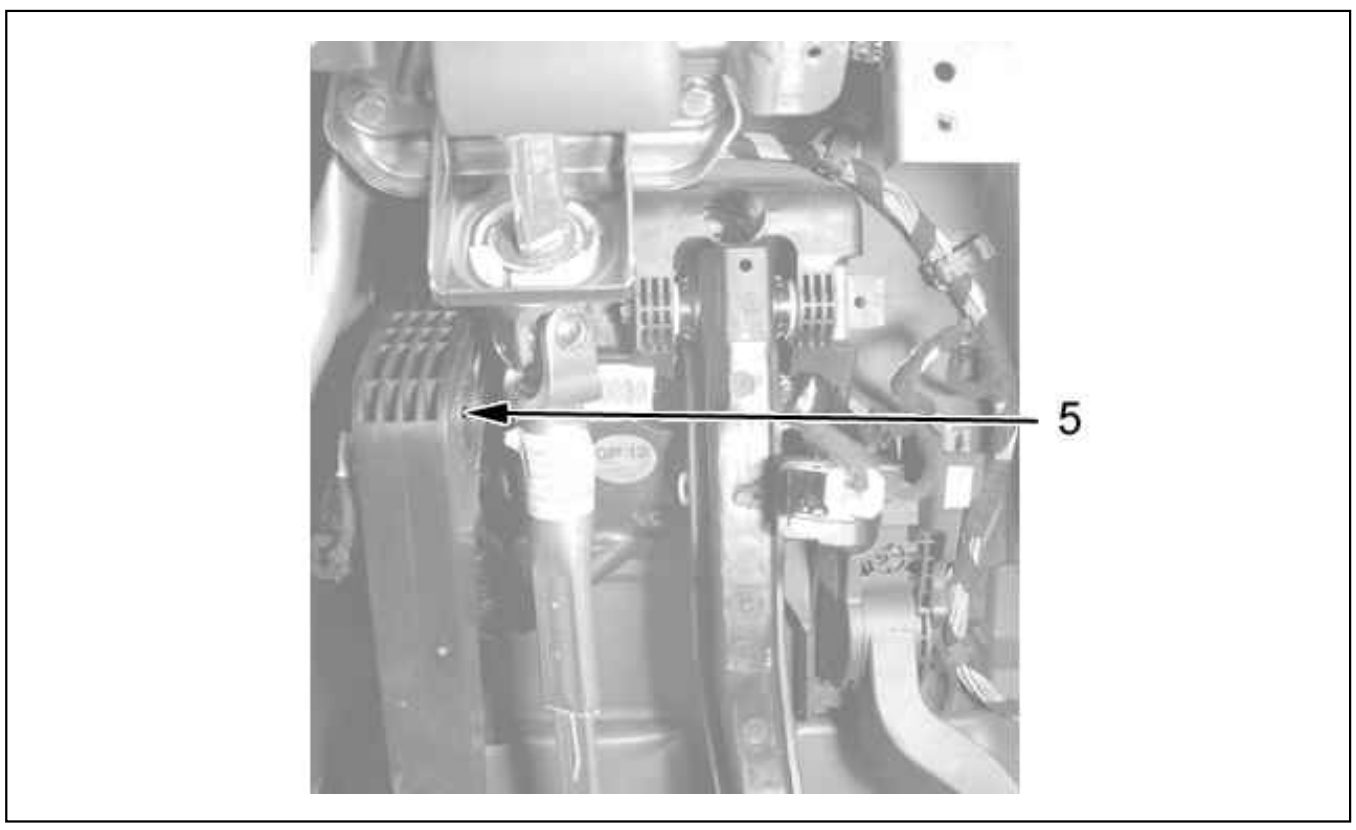

Figure : B3FB06UD

First assembly :

- Turn the pin (5) a quarter turn anticlockwise
- Remove the shaft (5)

Second assembly :

- Remove circlip
- Remove the shaft (5)

Detach the hydraulic clutch control master cylinder thrust rod from the clutch pedal.

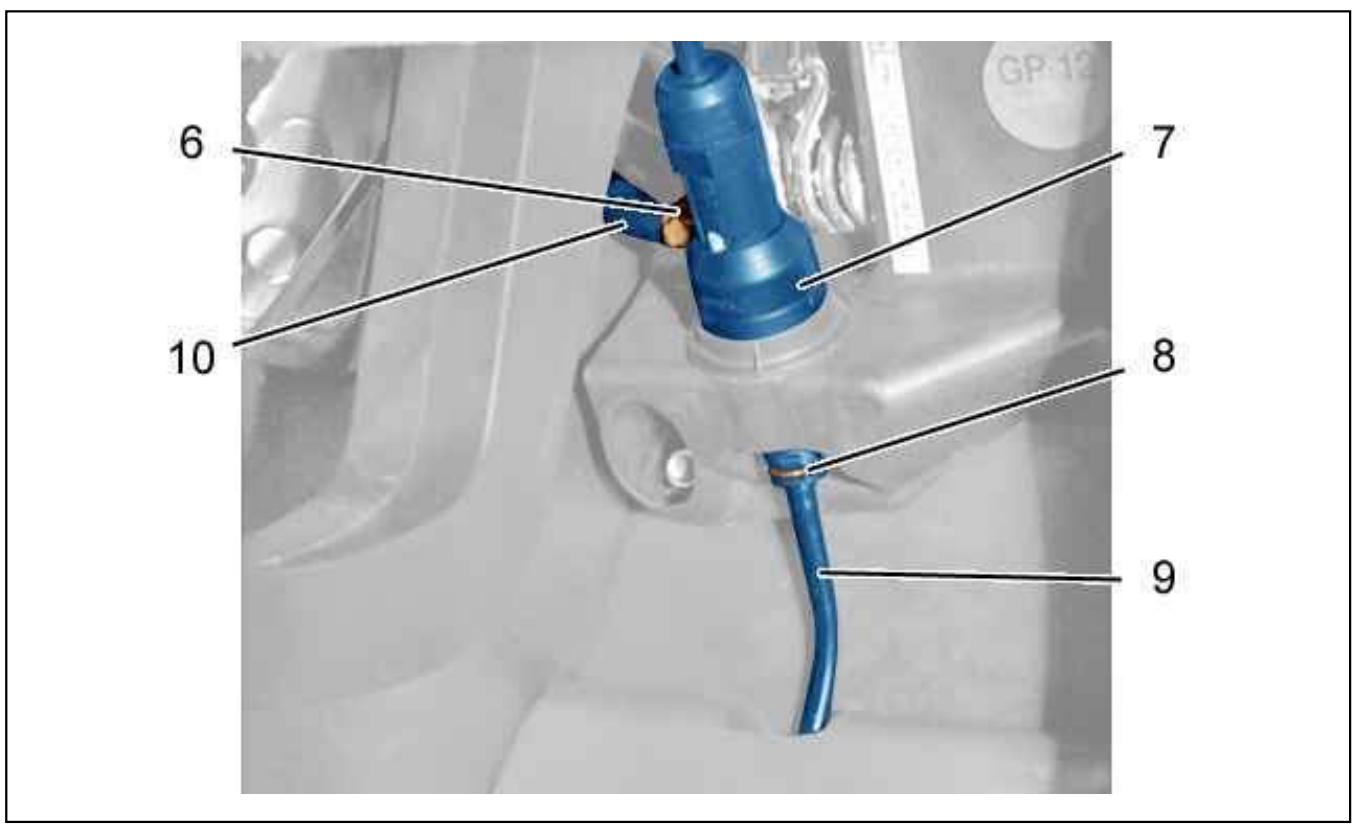

Figure : B2BG06ND

Uncouple :

- The clip (6)
- The supply pipe (10) of the hydraulic clutch control master cylinder (7)

N.B. : Plug the supply pipe (10) of the hydraulic clutch control master cylinder (7).

Remove the clip (8).
Uncouple the hydraulic clutch control pipe (9).

N.B. : Plug the hydraulic clutch control master pipe (9).

Remove the hydraulic clutch control master cylinder (7) (turn a quarter turn anticlockwise).

2.1. Assembly with hydraulic clutch control slave cylinder

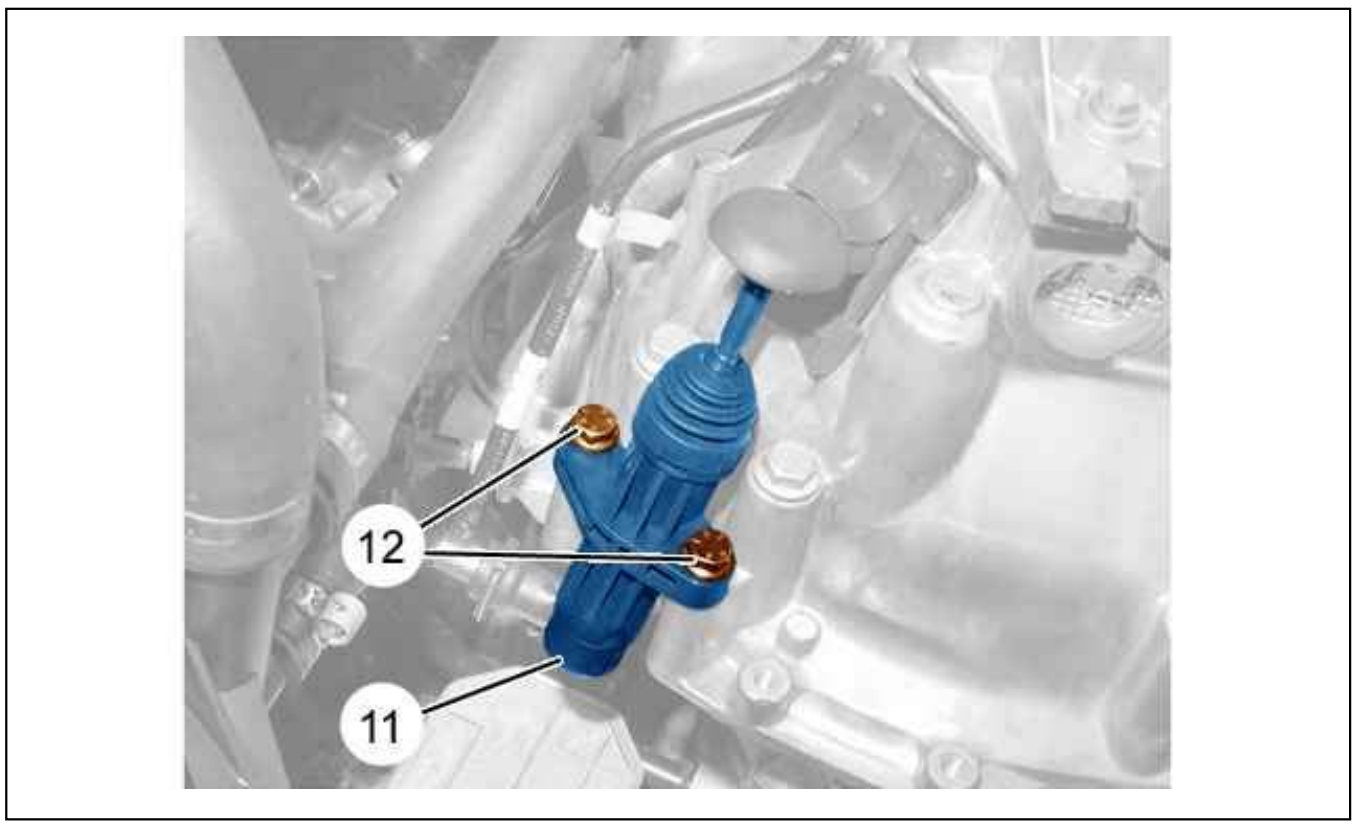

Figure : B2BG047D

Remove :

- The 2 bolts (12)
- The hydraulic clutch control slave cylinder (11)

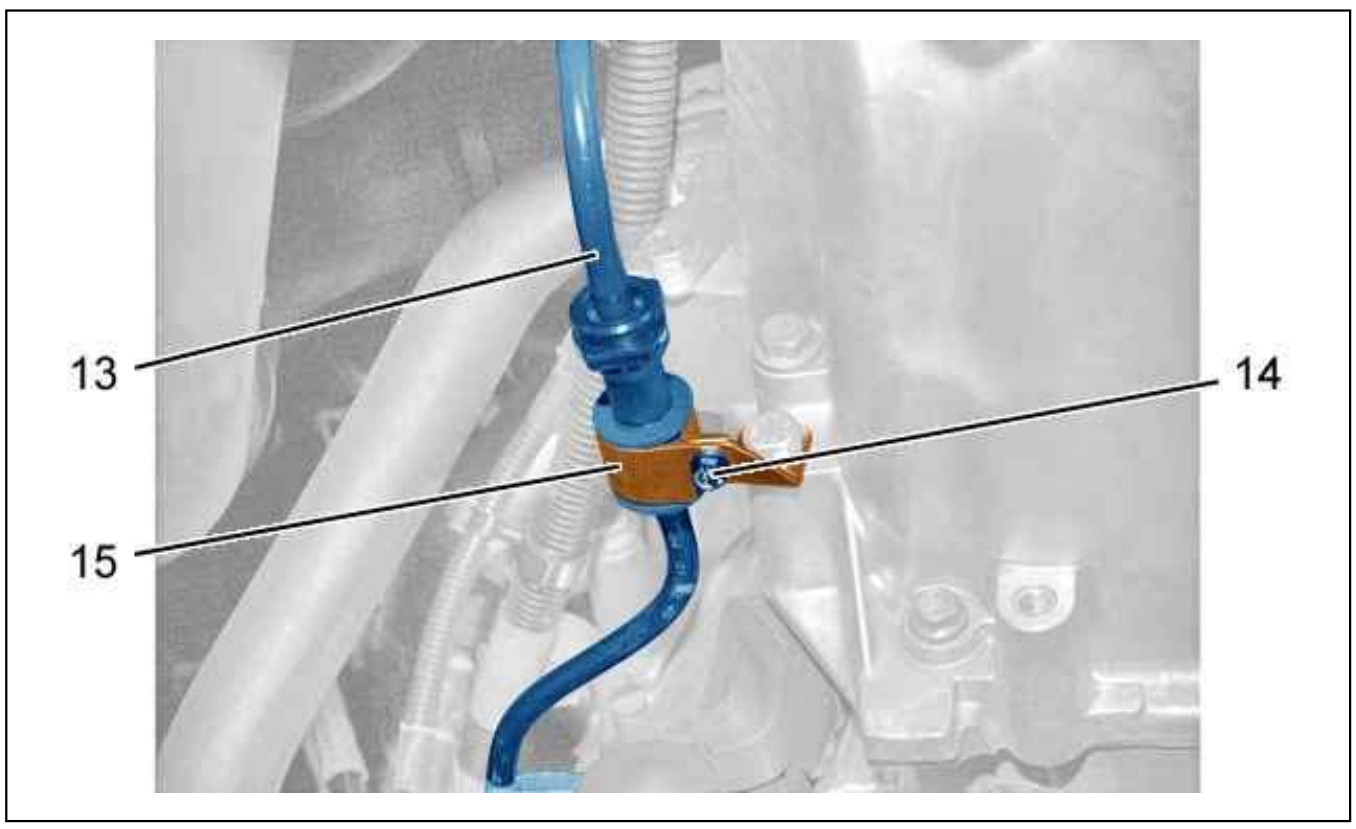

Figure : B2BG06OD

Remove the bolt (14).
Move the mounting (15) aside.
Remove the pipe (13).

2.2. Fitting with hydraulic stop

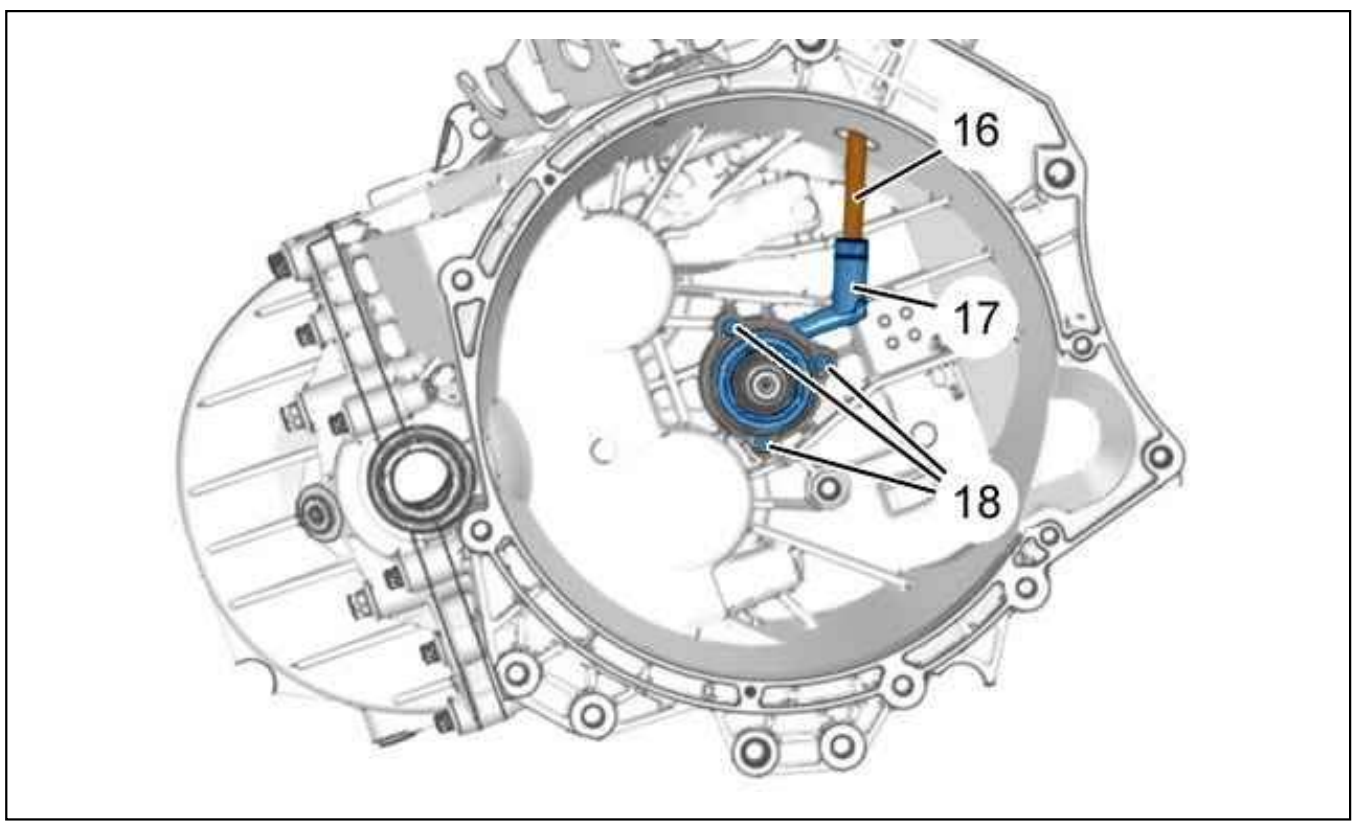

Figure : B2BG06PD

Remove :
- The pipe (16)
- The bolts (18)
- The hydraulic stop (17)

3. Refitting

Grease (according to assembly) :
- The master cylinder rod ball joint With grease ESSO NORVA 275
- The slave cylinder rod end piece With grease MOLYKOTE BR2 PLUS

3.1. Assembly with hydraulic clutch control slave cylinder

Pass the pipe (13) into the support (15).
Reclose the support (15).
Refit :
- The (14) bolt
- The pipe (13)

Close all of the clips retaining the pipe (13).
Refit :
- The hydraulic clutch control slave cylinder (11)
- The 2 bolts (12)

Push back the clip (3).
Pull on the locking clip (2).

3.2. Fitting with hydraulic stop

Refit :
- The pipe (16)
- The hydraulic stop (17)
- The bolts (18)

3.3. Subsequent operations

Refit the hydraulic clutch control master cylinder (7) (Rotate a quarter turn clockwise).
Couple up :
- The supply pipe (10) on the hydraulic clutch control master cylinder (7)
- The clip (6)
- The hydraulic clutch control pipe (9)

Refit the clip (8).
Connect the hydraulic clutch control master cylinder thrust rod to the clutch pedal.
First assembly :
- Refit the pin (5)
- Lock the pin (5) a quarter turn clockwise

Second assembly :
- Refit the pin (5)
- Clip and reconnect the connector

Refit :
- The cover under the steering wheel
- The floor carpet

4. Additional operations

Fill the brake fluid reservoir to its maximum capacity.
Bleed the hydraulic clutch control circuit (see the relevant operation).
Bring the brake fluid level to the level marked previously.
Refit the fluid reservoir cap.
Refit the air filter and air inlet duct assembly.

BLEEDING : HYDRAULIC CLUTCH CONTROL

ESSENTIAL : Observe the safety and cleanliness recommendations .

ESSENTIAL : During the bleed operations, take care to maintain the level of brake fluid in the reservoir by topping it up (if necessary). Use new brake fluid only.

CAUTION : Do not use automatic bleed equipment (risk of foaming of the brake fluid in the hydraulic circuit).

N.B. : For the bleed operation 2 operators are necessary.

Chock and lift the vehicle on a 2 column lift.

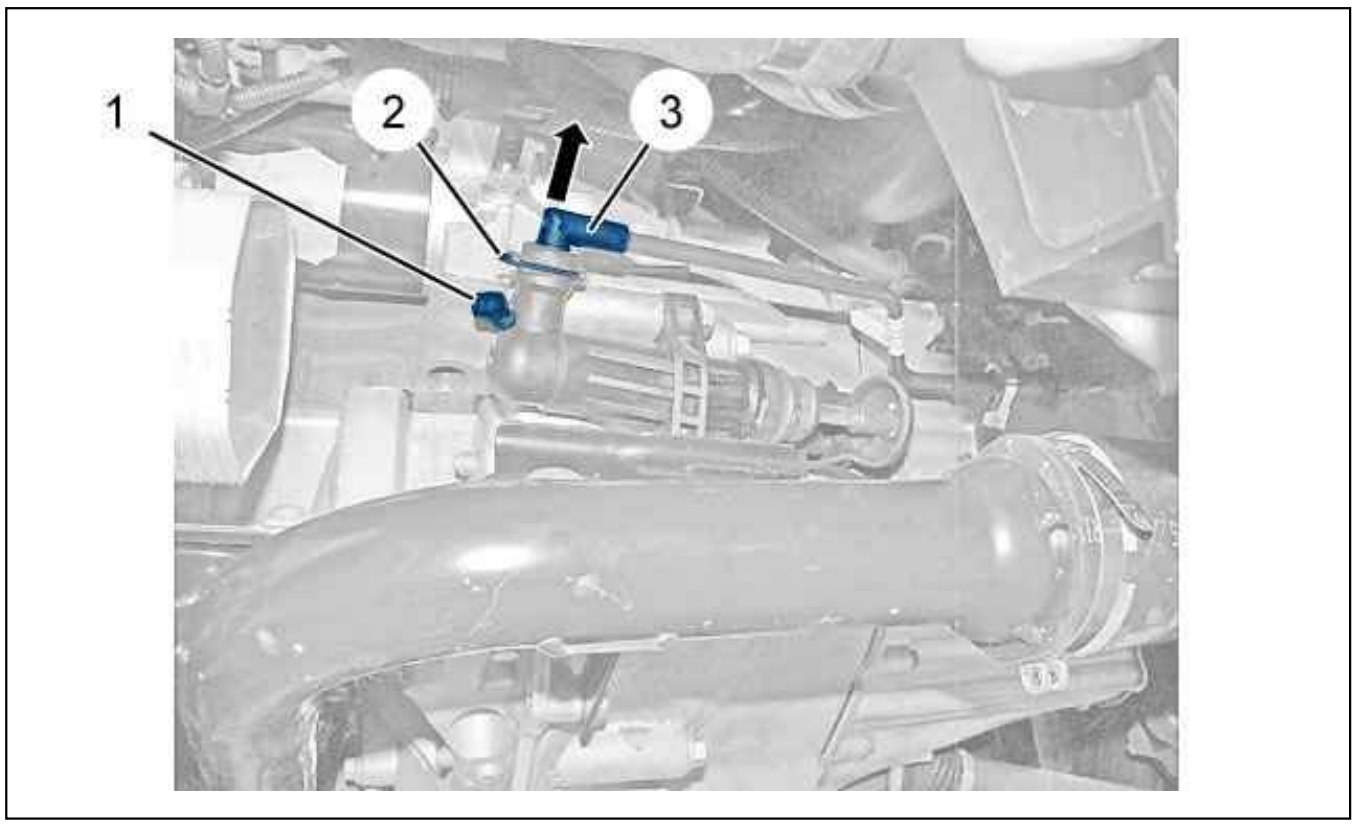

Figure : B2BI00JD

Couple a transparent pipe onto the bleed valve (1).
Sink the end of the transparent tube in a container containing brake fluid, located lower down than the clutch slave cylinder .

CAUTION : The end of the transparent pipe must be submerged into the brake fluid.

Press the locking clip (2).
Pull the clip (3) by one notch in the direction of the arrow (Position open).
Action the clutch pedal manually through its entire travel rapidly 7 times.
Leave the clutch pedal at the lower end of its travel during the last manoeuvre.
Push back the clip (3) (closed position).
Allow the clutch pedal to rise to the upper position.
Fill the brake fluid reservoir to its maximum capacity.
Press the locking clip (2).
Pull the clip (3) by one notch in the direction of the arrow (Position open).
Action the clutch pedal manually through its entire travel rapidly 7 times.
Keep the clutch pedal at the lower end of its travel during the last manoeuvre.
Push back the clip (3) (Closed position).
Uncouple the transparent pipe.
Top up the brake fluid level to the MAX. level in the brake fluid reservoir.
Press the clutch pedal rapidly 40 times.
Lower the vehicle.
Start the engine.
Apply the handbrake.
Engage a gear.

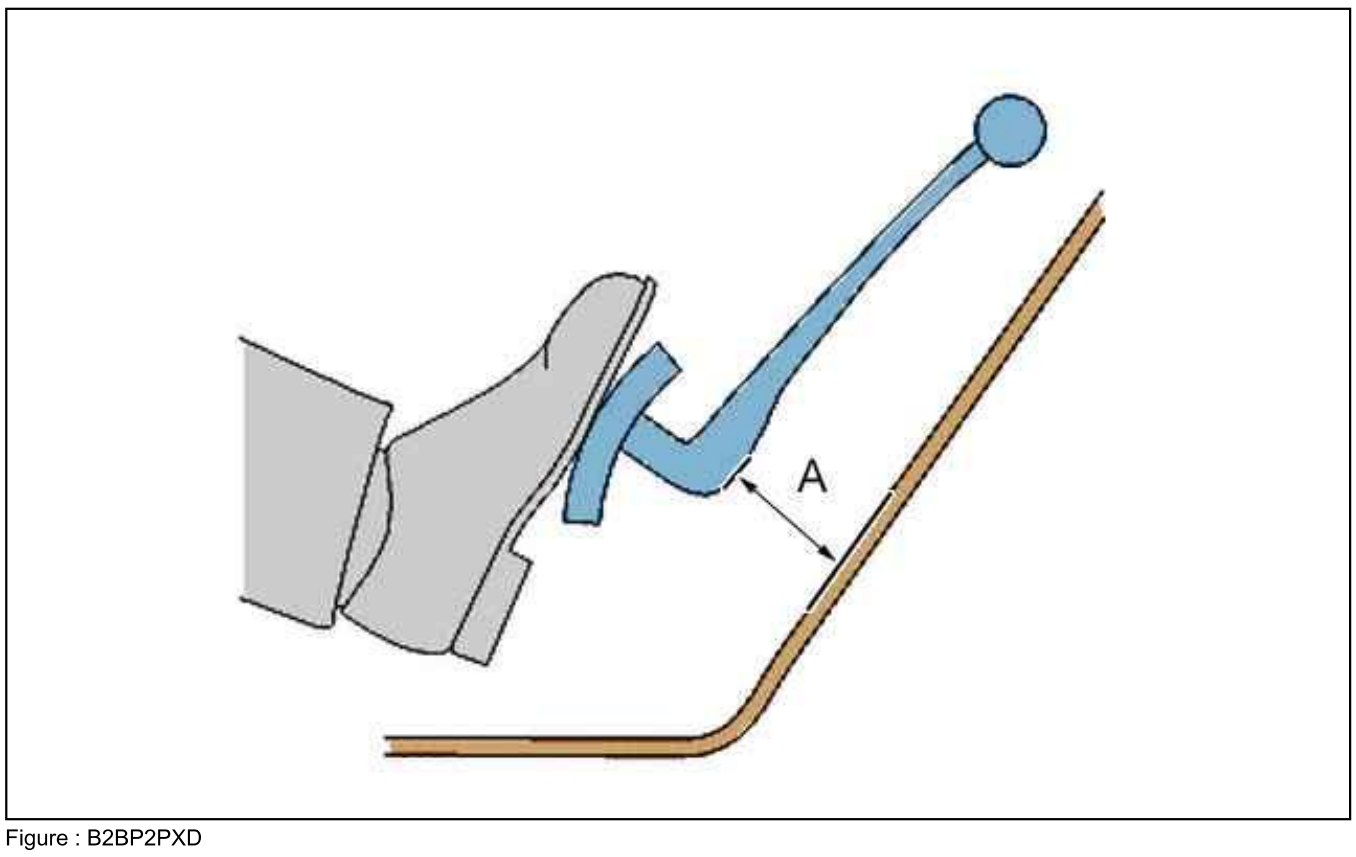

Figure : B2BP2PXD

Check that clutch mechanism friction begins at a dimension "A" of 40 mm or more (the dimension (A) is given as a guide).
Repeat the bleed operations (if necessary).

BLEEDING : HYDRAULIC CONTROL/HYDRAULIC CLUTCH STOP

ESSENTIAL : During the bleed operations, take care to maintain the level of brake fluid in the reservoir by topping it up (if necessary). Use new brake fluid only.

CAUTION : Do not use automatic bleed equipment (risk of foaming of the brake fluid in the hydraulic circuit).

N.B. : For the bleed operation 2 operators are necessary.

Chock and lift the vehicle on a 2 column lift.

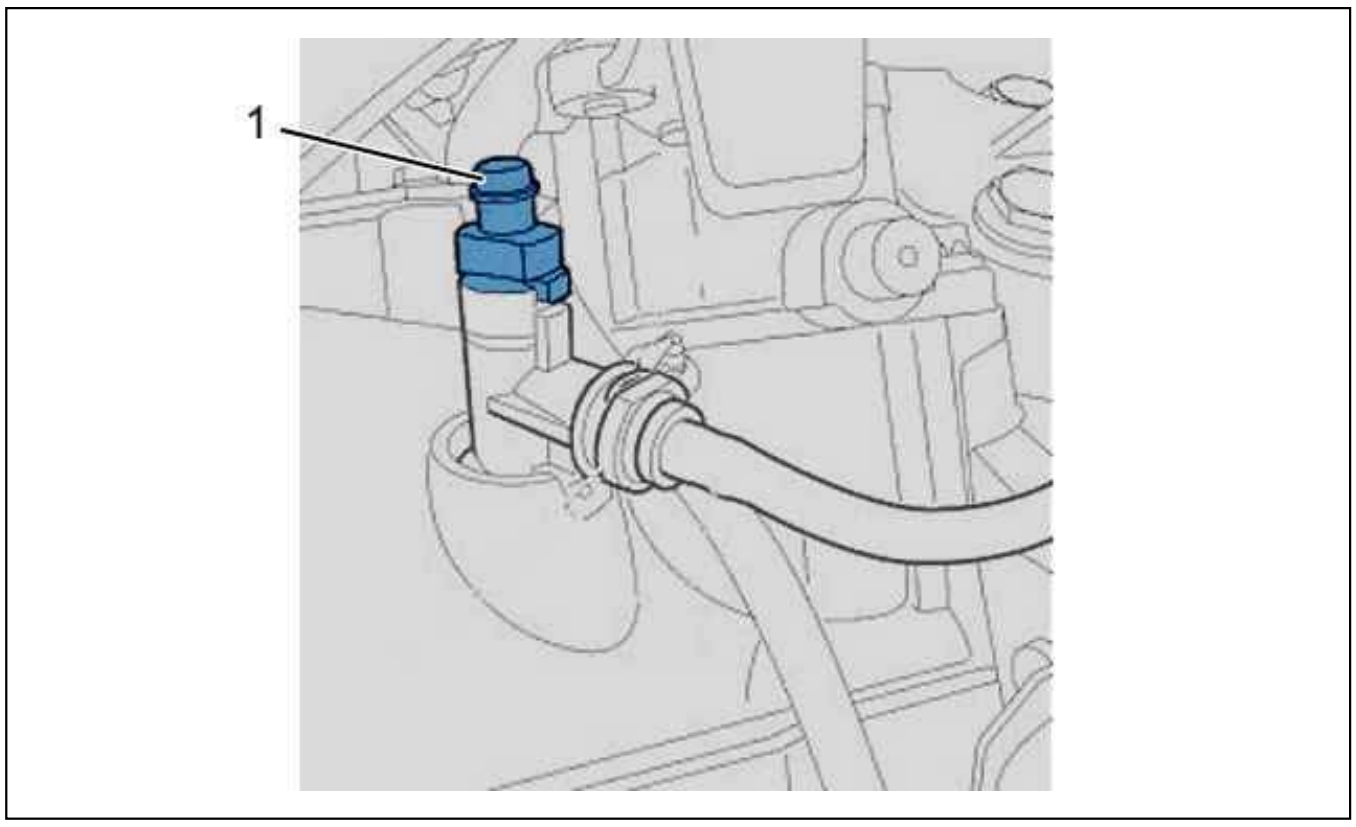

Figure : B2BM00DD

Couple a transparent pipe onto the bleed valve (1).
Sink the end of the transparent tube in a container containing brake fluid, located lower down than the clutch slave cylinder .

CAUTION : The end of the transparent pipe must be submerged into the brake fluid.

Open the bleed valve (1).
Action the clutch pedal manually through its entire travel rapidly 7 times.
Leave the clutch pedal at the lower end of its travel during the last manoeuvre.
Close the bleed valve (1).
Allow the clutch pedal to rise to the upper position.
Fill the brake fluid reservoir to its maximum capacity.
Open the bleed valve (1).
Action the clutch pedal manually through its entire travel rapidly 7 times.
Keep the clutch pedal at the lower end of its travel during the last manoeuvre.
Close the bleed valve (1).
Uncouple the transparent pipe.
Top up the brake fluid level to the MAX. level in the brake fluid reservoir.
Press the clutch pedal rapidly 40 times.
Lower the vehicle.
Start the engine.
Apply the handbrake.
Engage a gear.

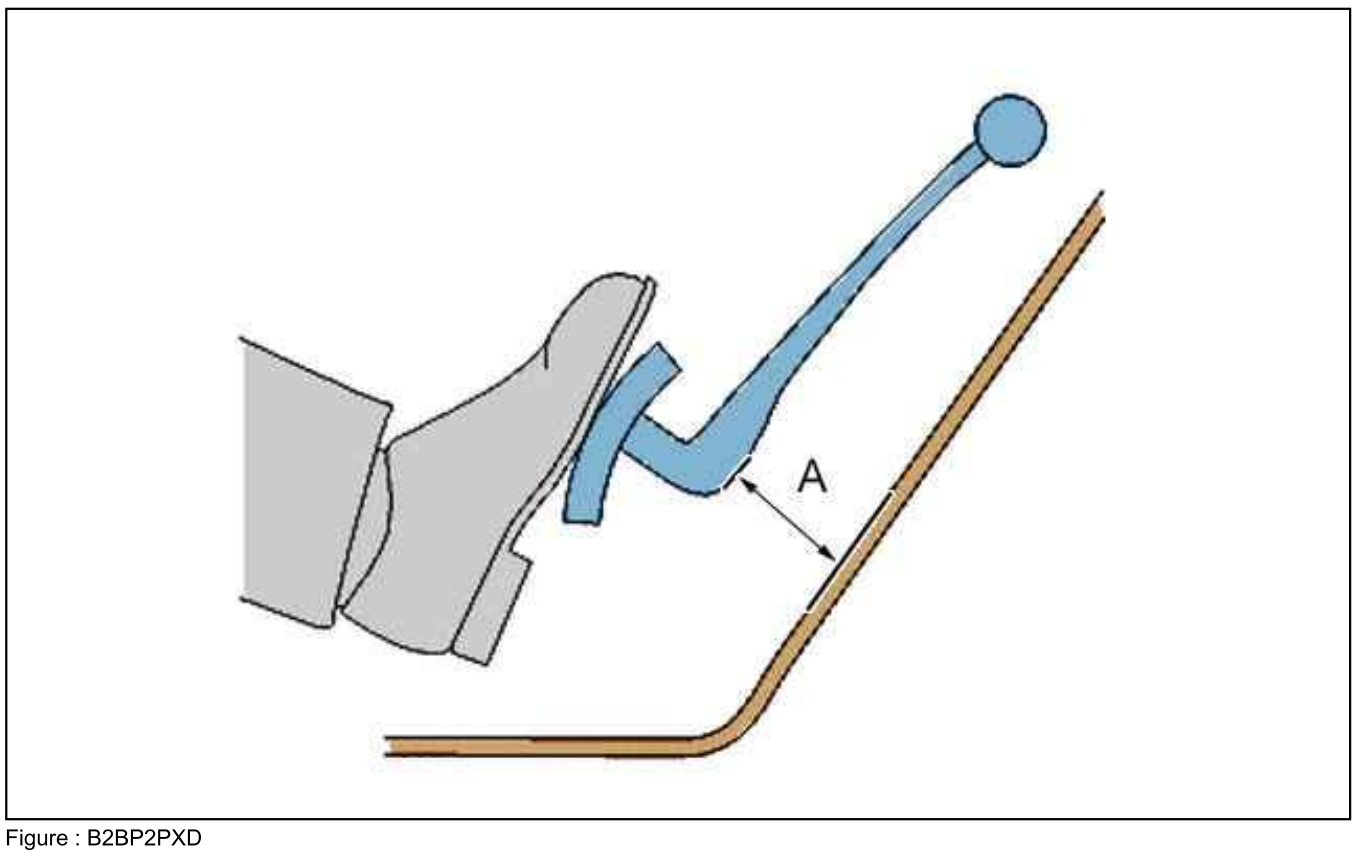

Figure : B2BP2PXD

Check that clutch mechanism friction begins at a dimension "A" of 40 mm or more (the dimension (A) is given as a guide).
Repeat the bleed operations (if necessary).

PRESENTATION : RECOMMENDED TOOLS

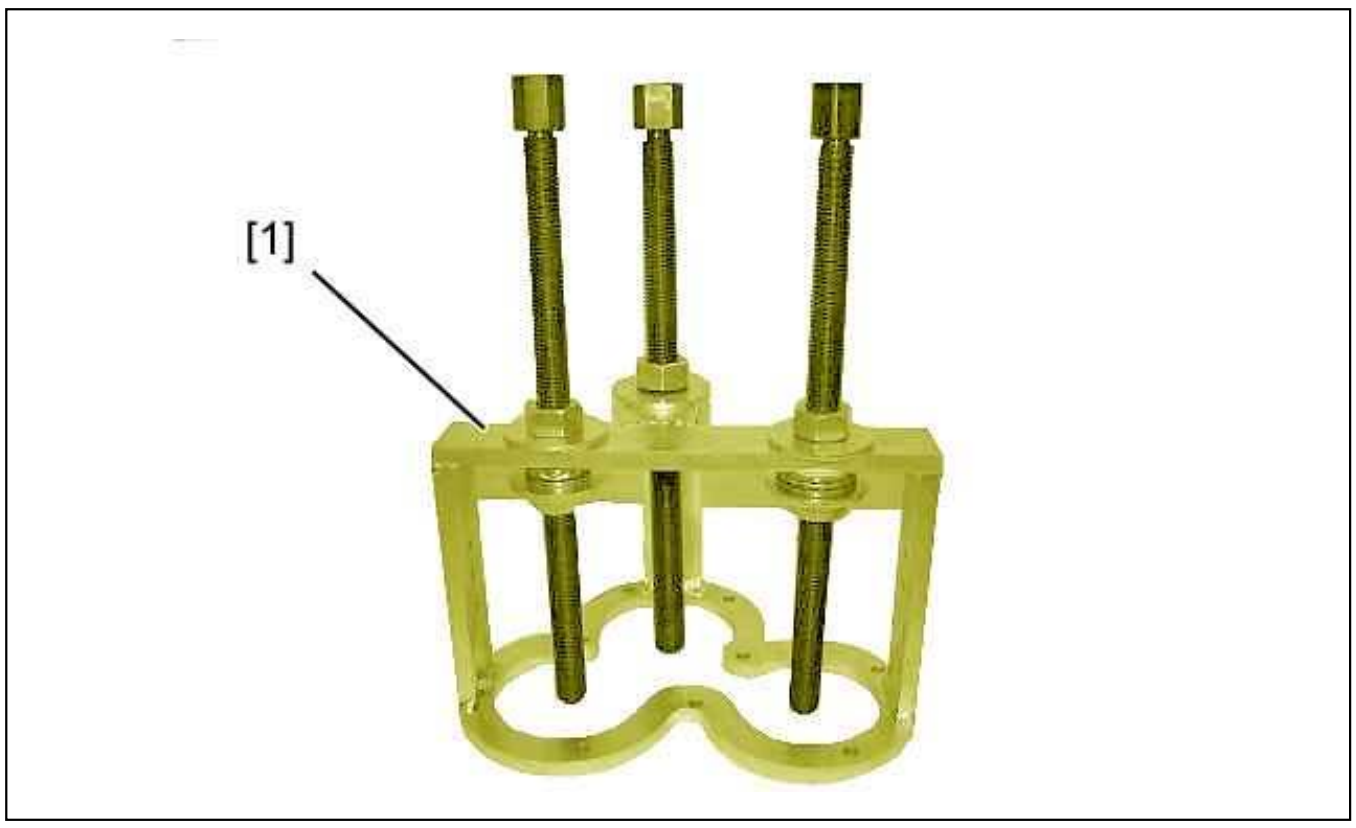

Figure : E5AM0FAD

[1] Gearbox casing extractor (-).0347-A.

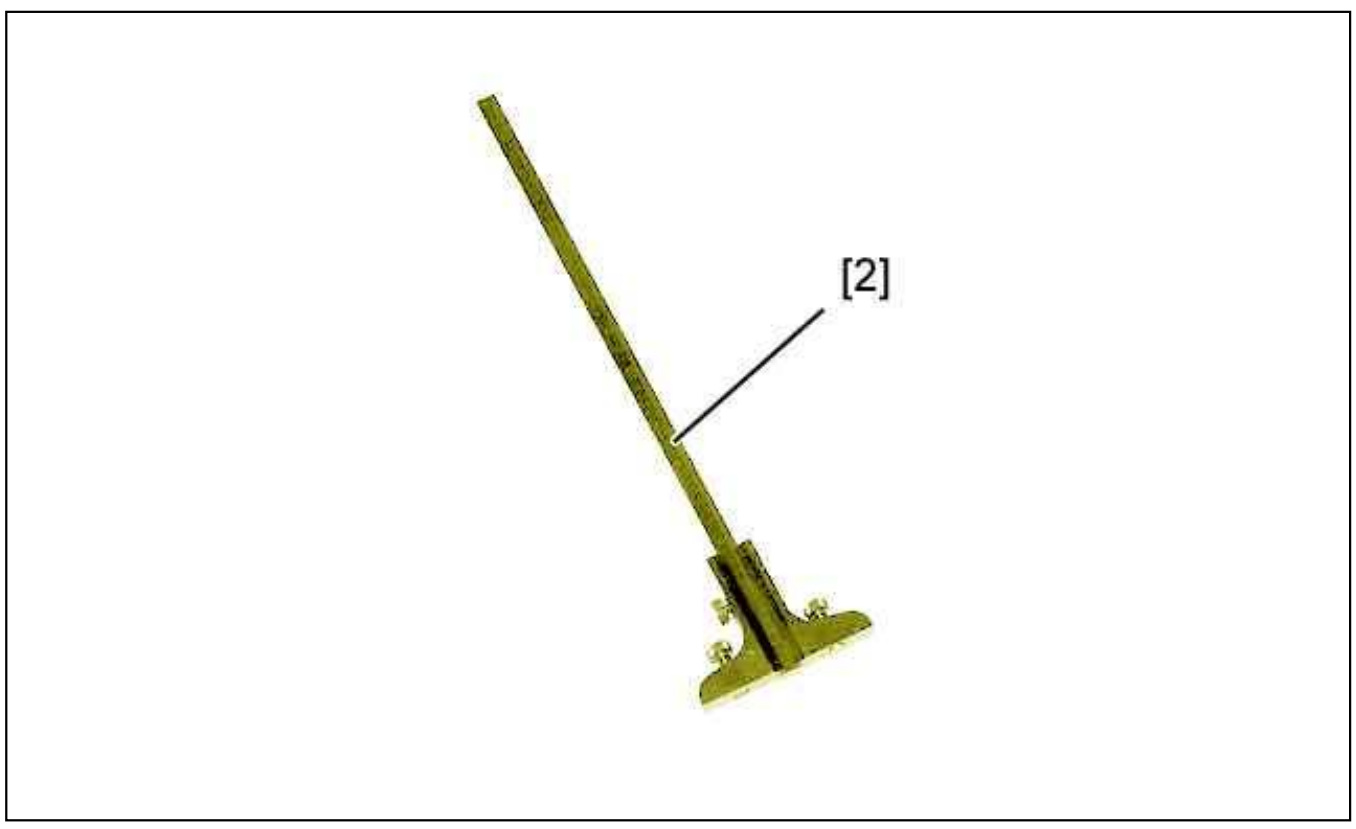

Figure : E5AM0FBD

[2] Depth gauge.

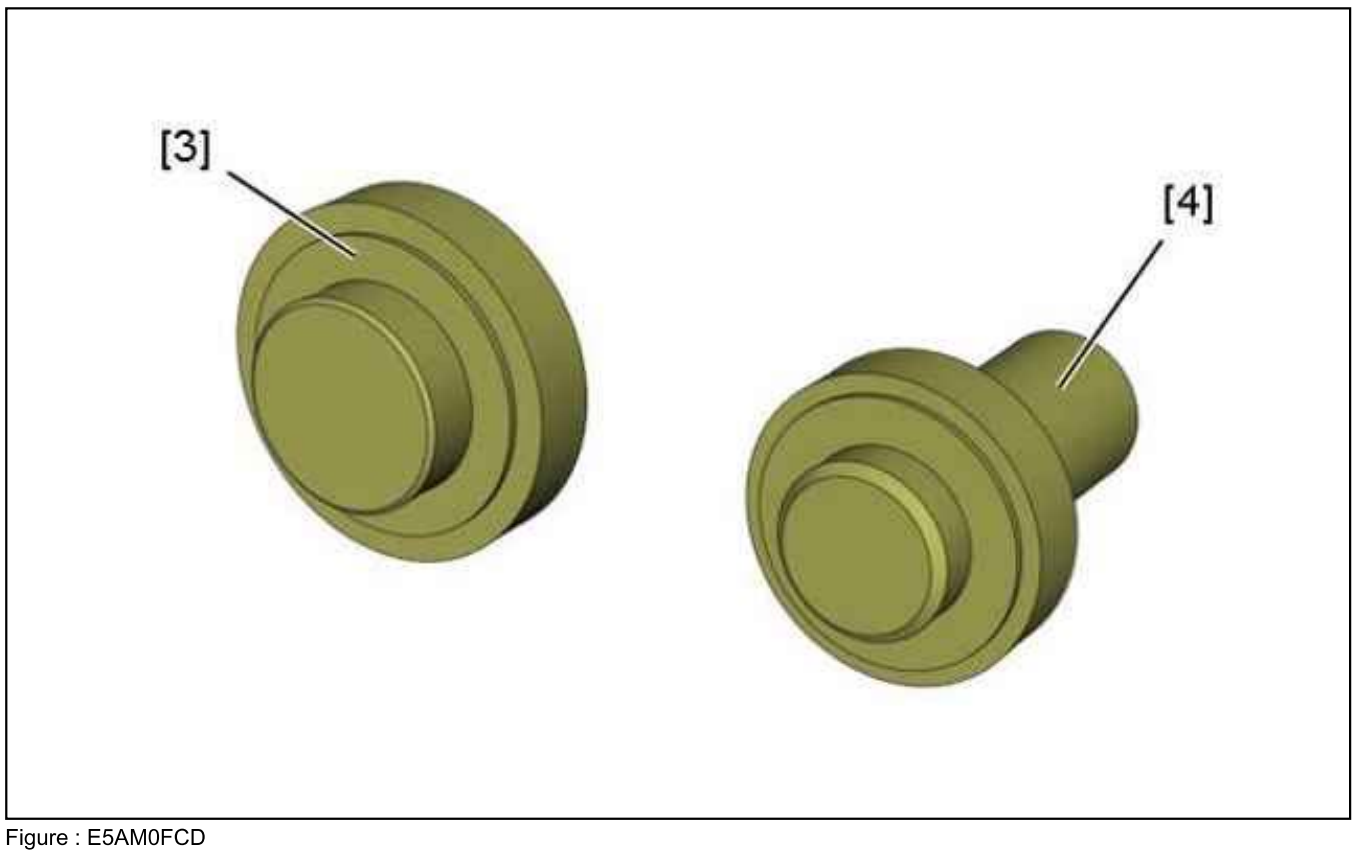

Figure : E5AM0FCD

Reference	Designation	Reference	Reference

[3]	left hand driveshaft seal fitting drift	(-).0330-M	5708-T.M
[4]	right hand driveshaft seal fitting drift	(-).0332-B	(-).0332-B

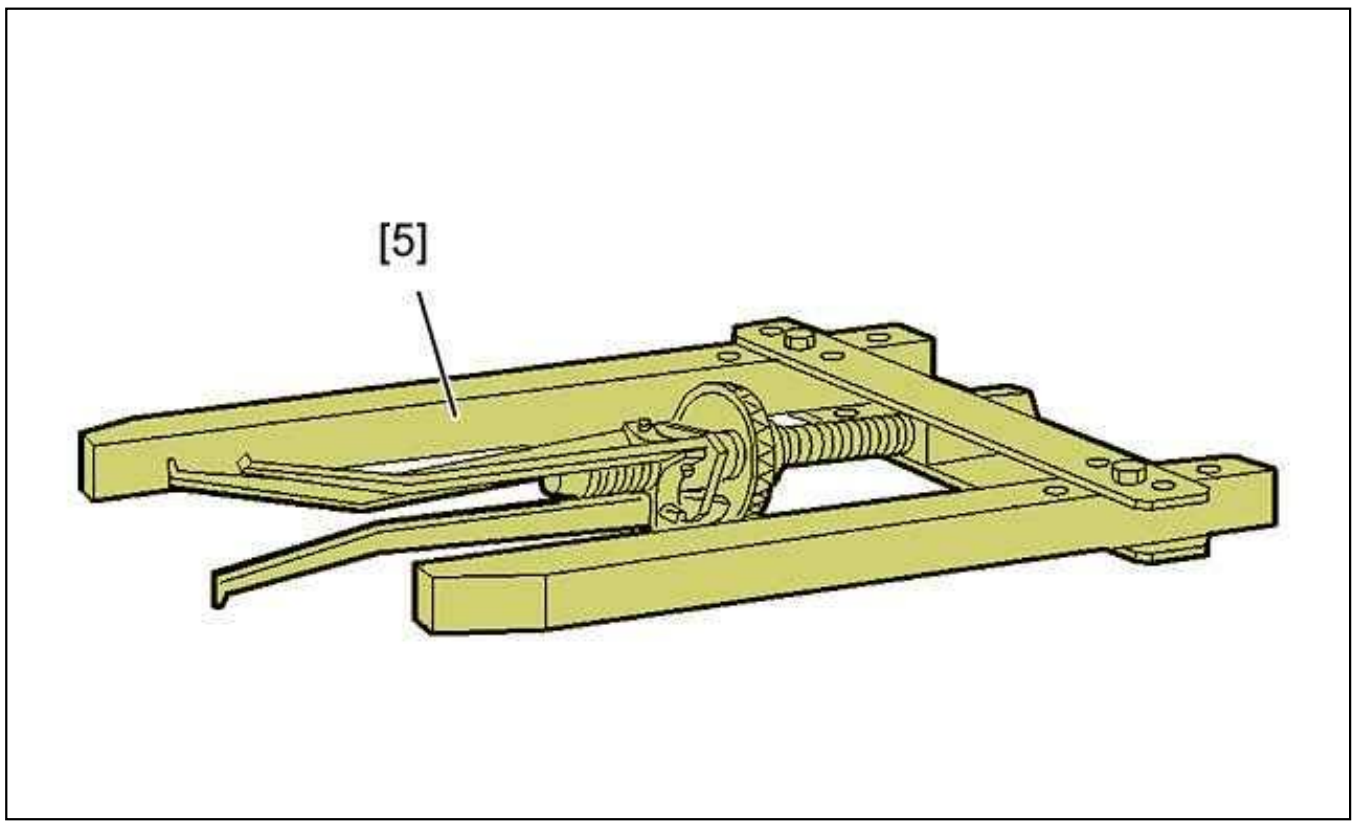

Figure : E5AM0FDD

Reference	Designation	Reference	Reference
[5]	Bearing cage extractor	(-).0330-F	5703-T

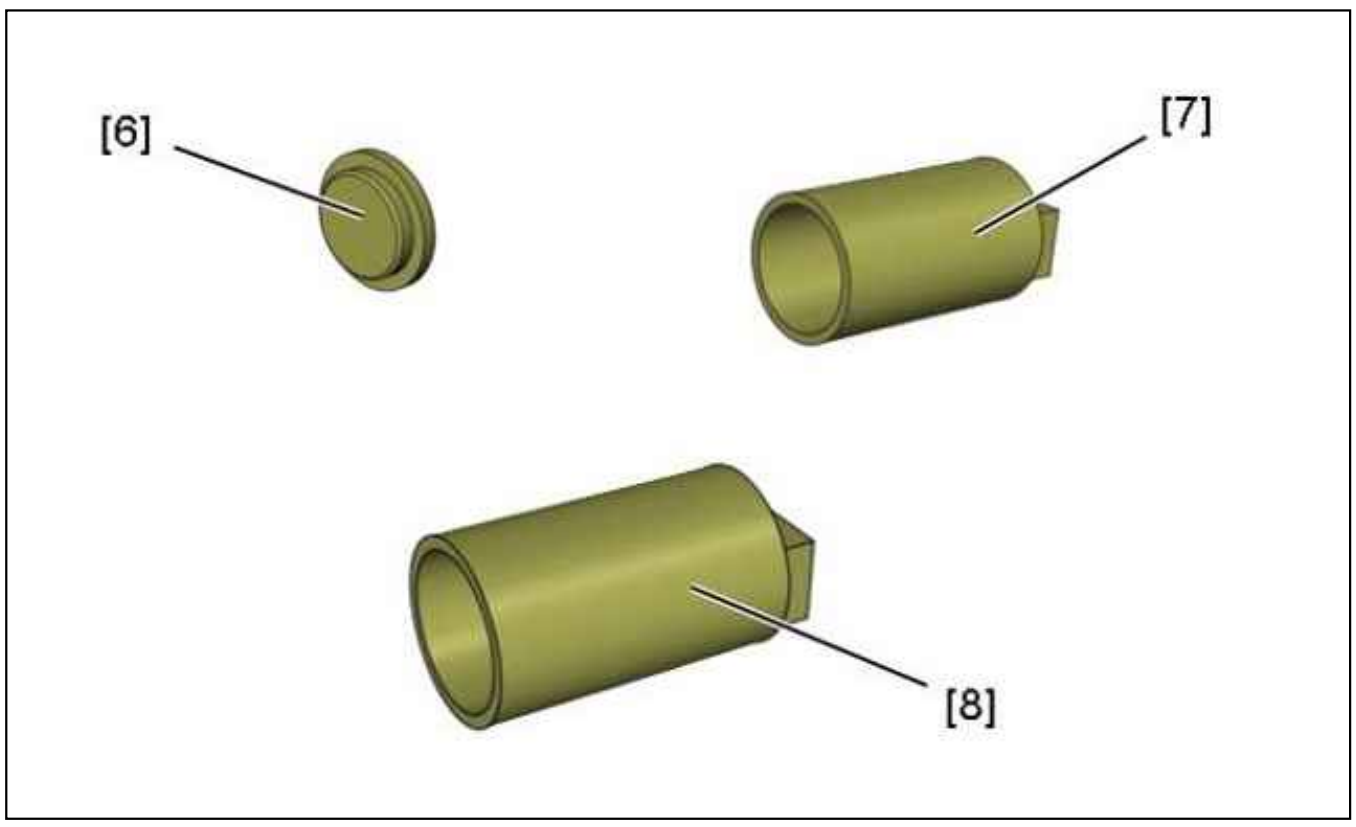

Figure : E5AM0FED

Reference	Designation	Reference	Reference
[6]	thrust button	(-).0330-S	5708-T.S
[7]	Bearing fitting tube (front) - input shaft	(-).0347-C	(-).0347-C
[8]	Tube for fitting differential housing bearings	(-).0347-B	(-).0347-B

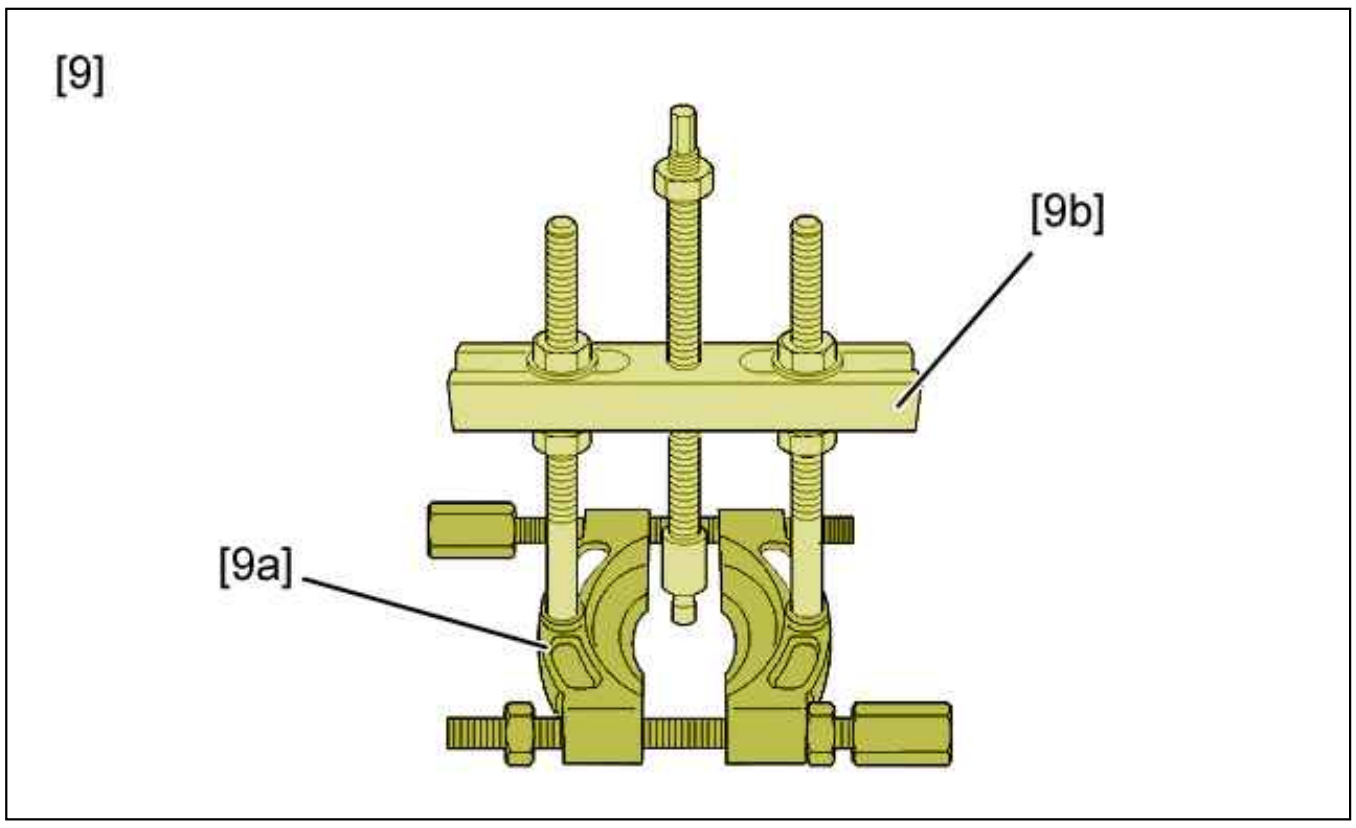

Figure : E5AM0FFD

Reference	Designation	Reference	Reference
[9a]	Universal extractor separator	FACOM U53 T2	4108-T
[9b]	Universal extractor bracket	FACOM U53 K2	4108-T

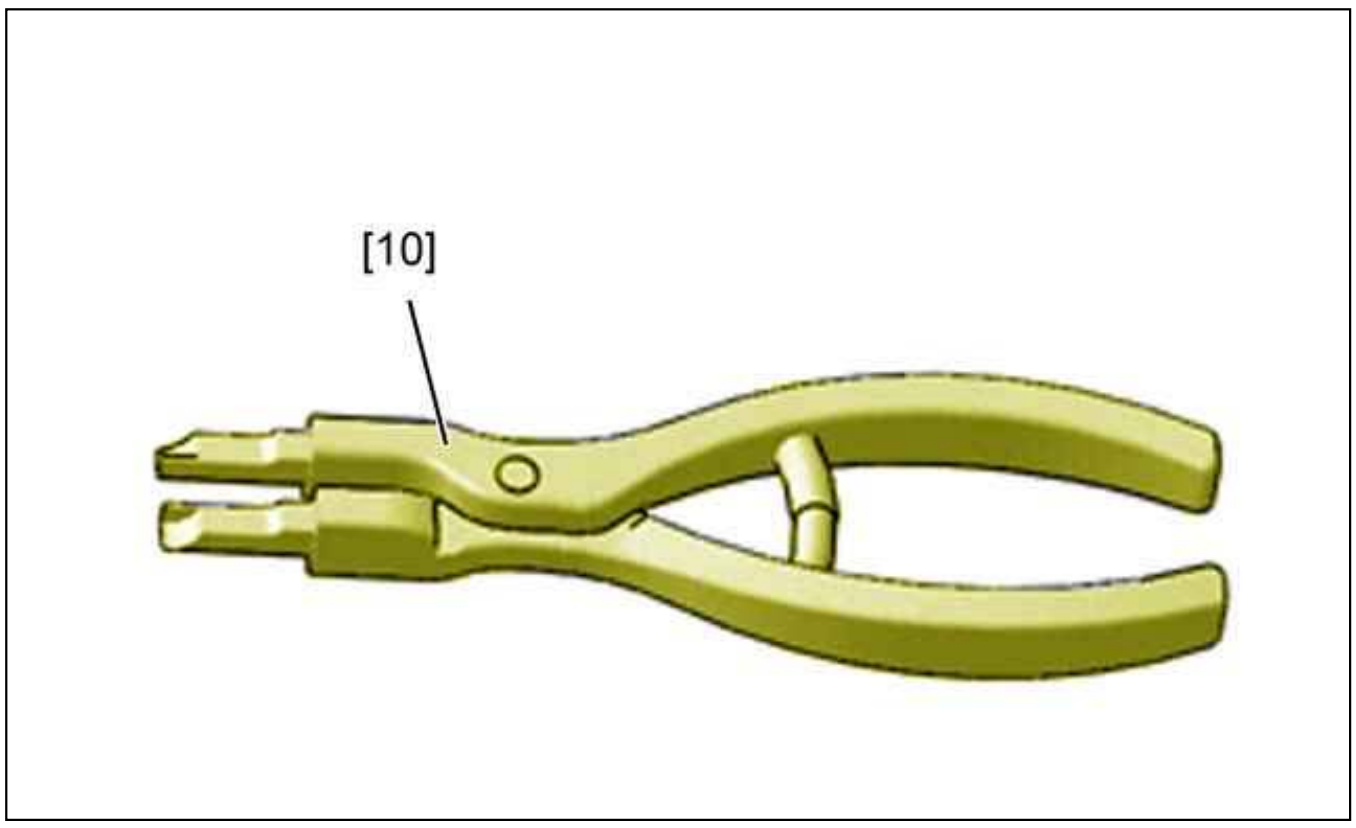

Figure : E5AM0FGD

[10] Exterior stop ring pliers FACOM 411.A-17.

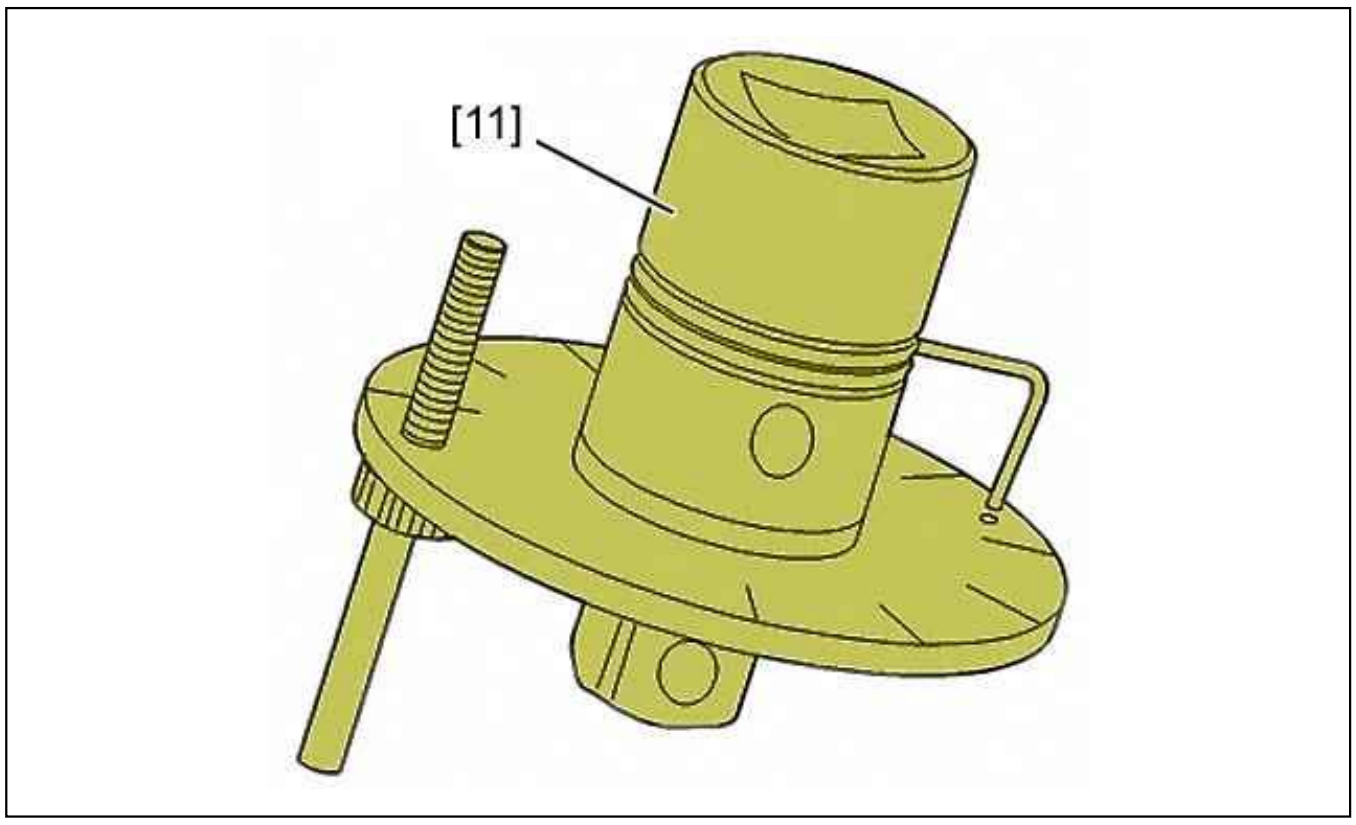

Figure : E5AM0FHD

[11] adaptor for angular tightening FACOM D 360.

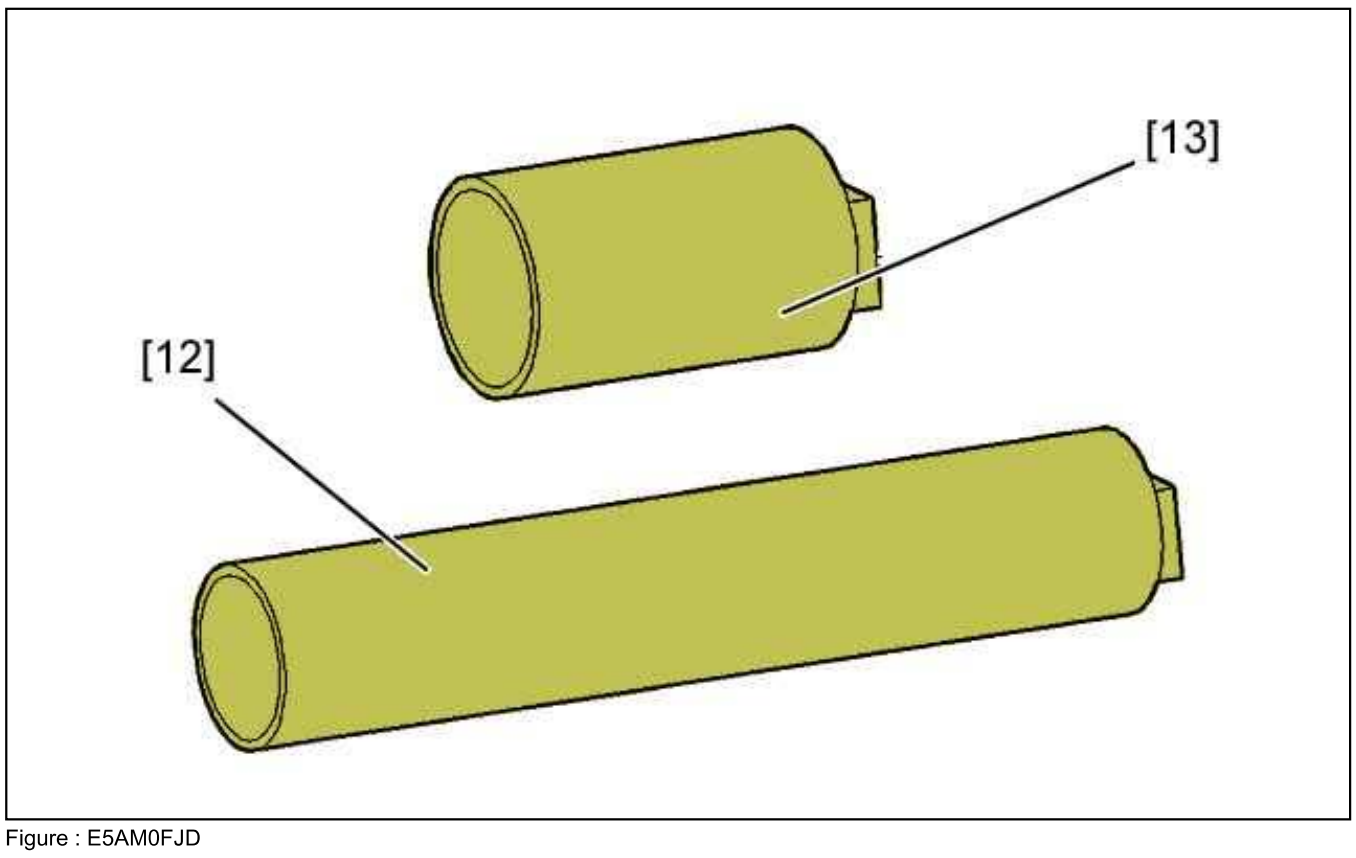

Figure : E5AM0FJD

[12] Bearing disassembly pipe (-).0332-J.
[13] tube for fitting the bearing (-).0332-H.

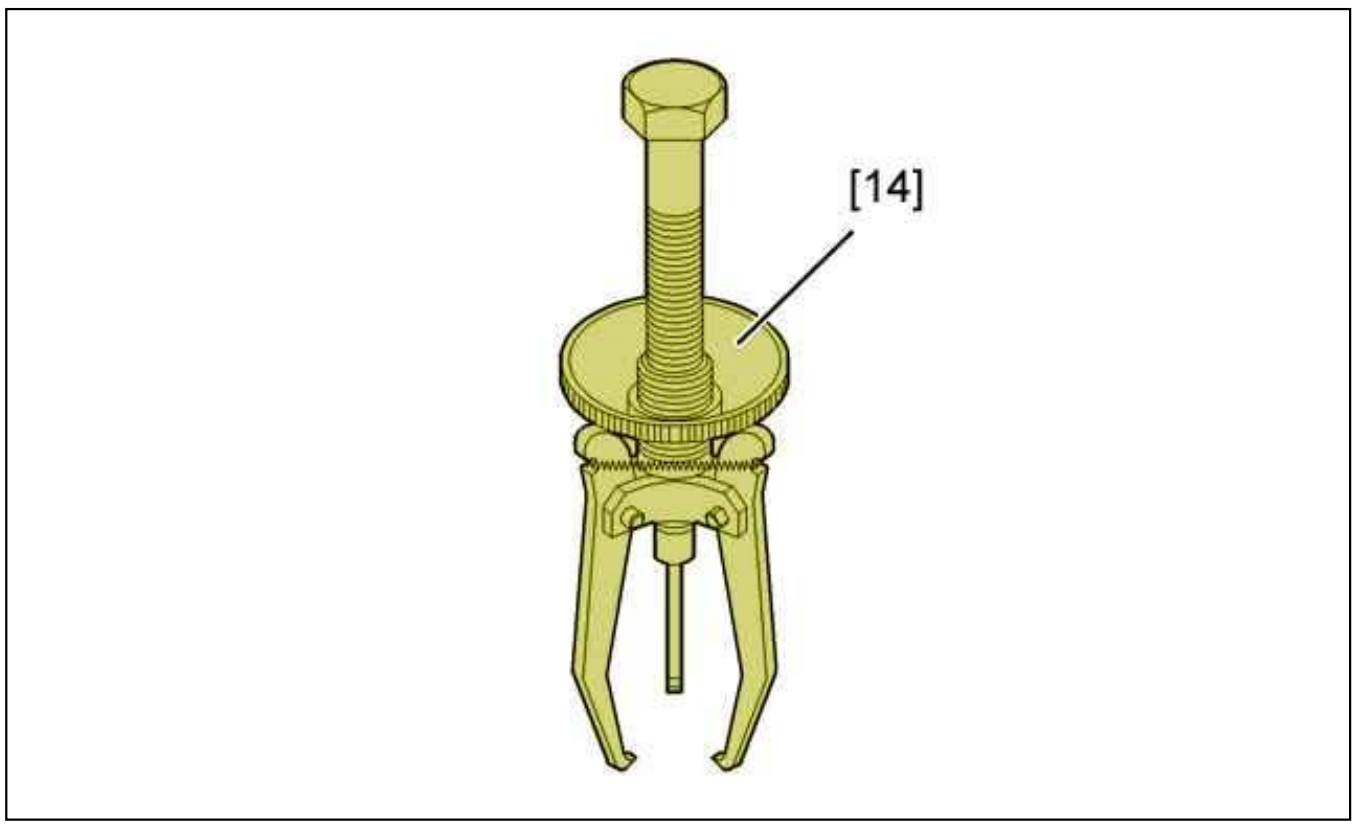

Figure : E5AM0FKD

Reference	Designation	Reference	Reference
[14]	extractor	(-).0331-A	5716-T

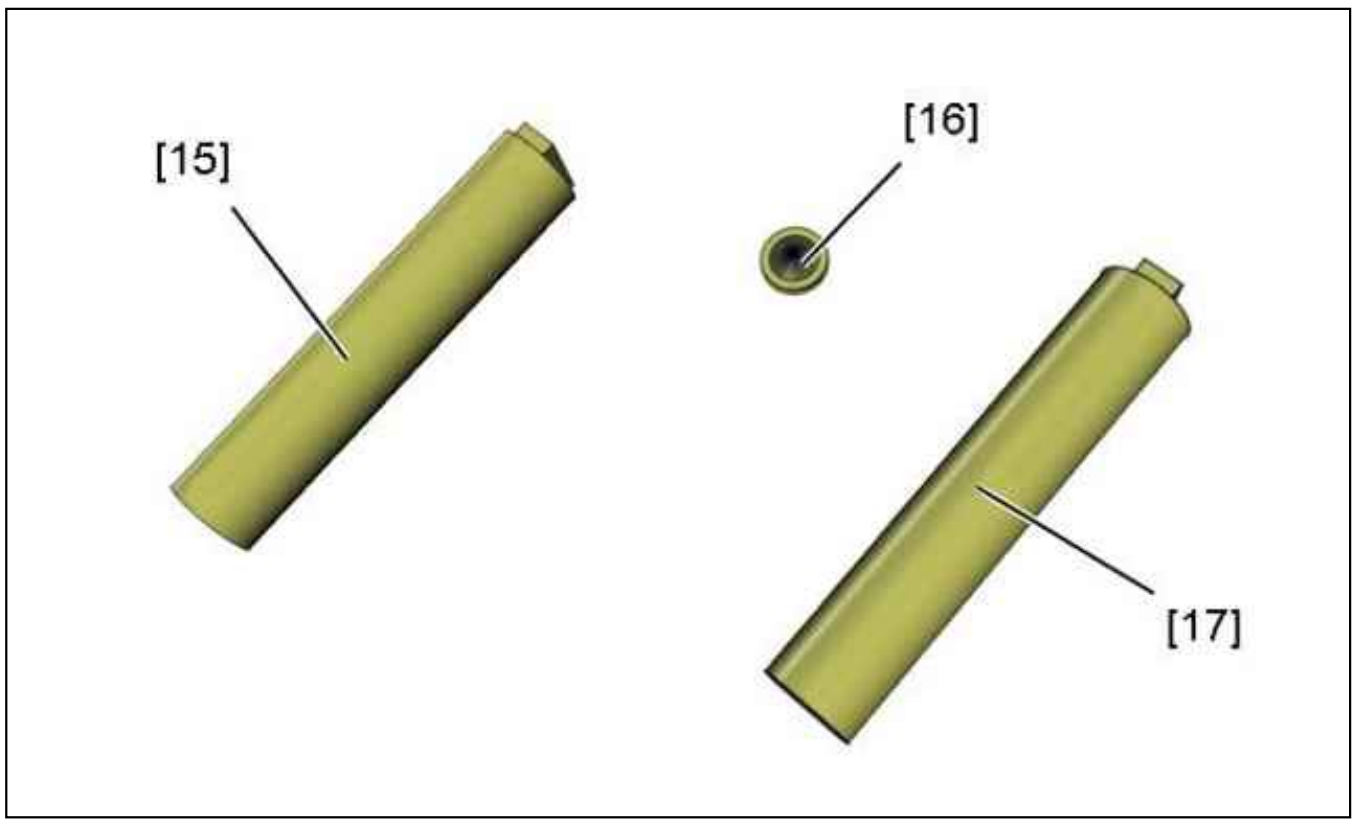

Figure : E5AM0FLD

[15] assembly tube (-).0332-G.
[16] thrust button (-).0332-D2.
[17] assembly tube (spacer) (-).0347-D.

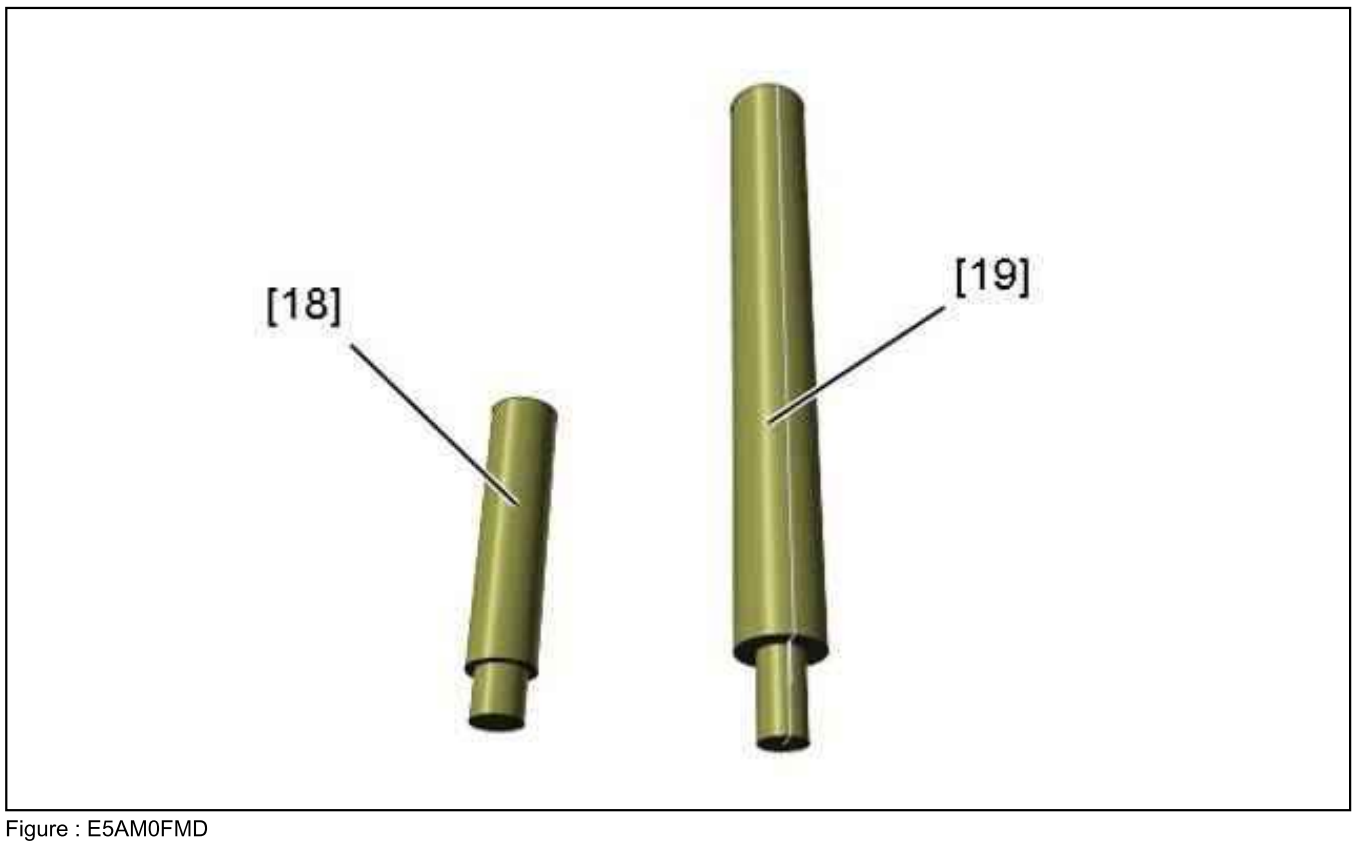

Figure : E5AM0FMD

[18] Tool for fitting spacer (-).0347-E.
[19] Tool for fitting bearing (-).0347-F.

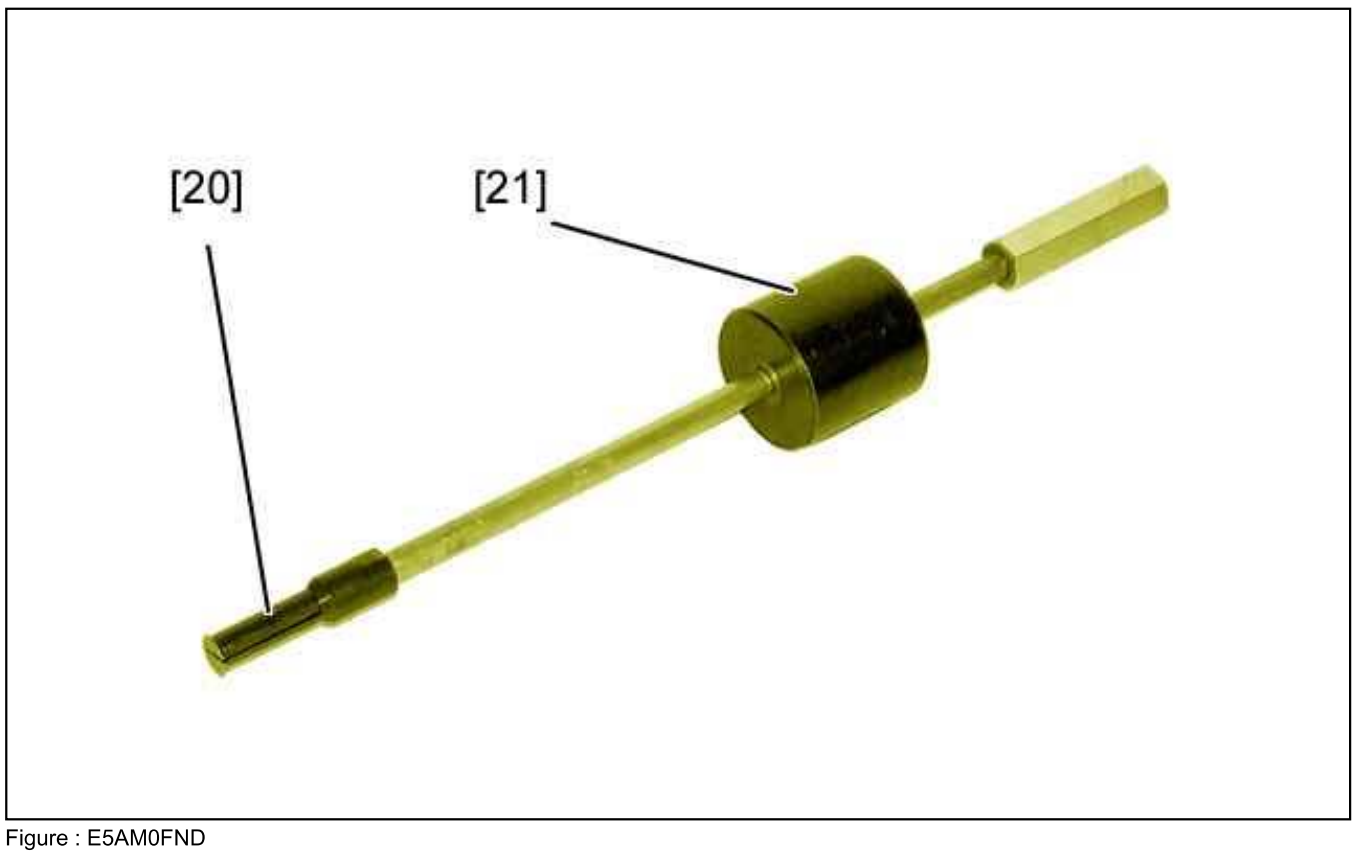

Figure : E5AM0FND

Reference	Designation	Reference	Reference
[20]	End fitting for extractor (15 mm diameter)	(-).0317-AS	4013-T
[21]	inertia extractor	(-).0316-A	1671-T.A

TIGHTENING TORQUES : ENGINE/GEARBOX COUPLING

1. Tightening torques

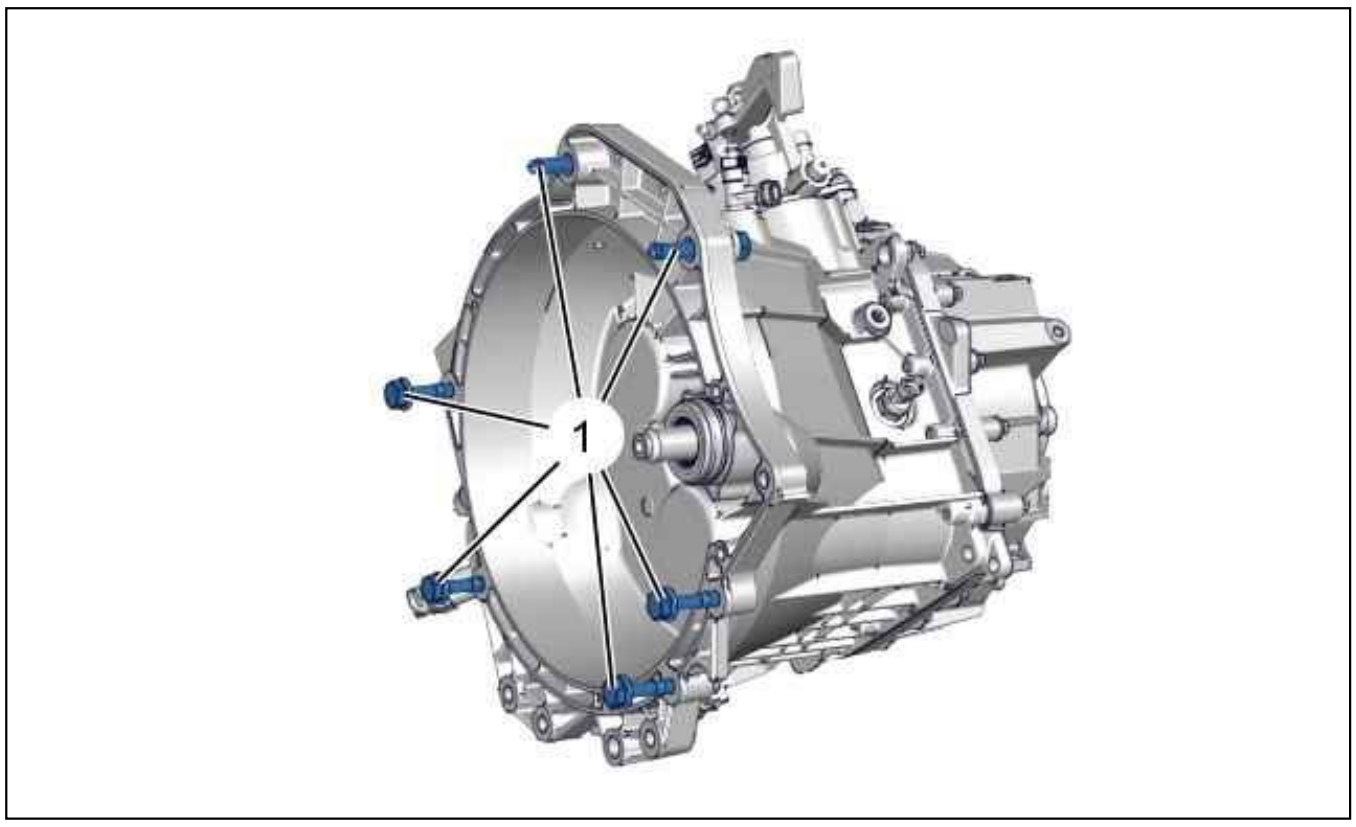

Figure : B2CB05TD

Reference	Designation	Tightening torque
(1)	Engine/gearbox coupling bolt (M40) (*)	6,5 daNm
(*) Follow the tightening sequence		

2. Sequence of tightening the bolts (1)

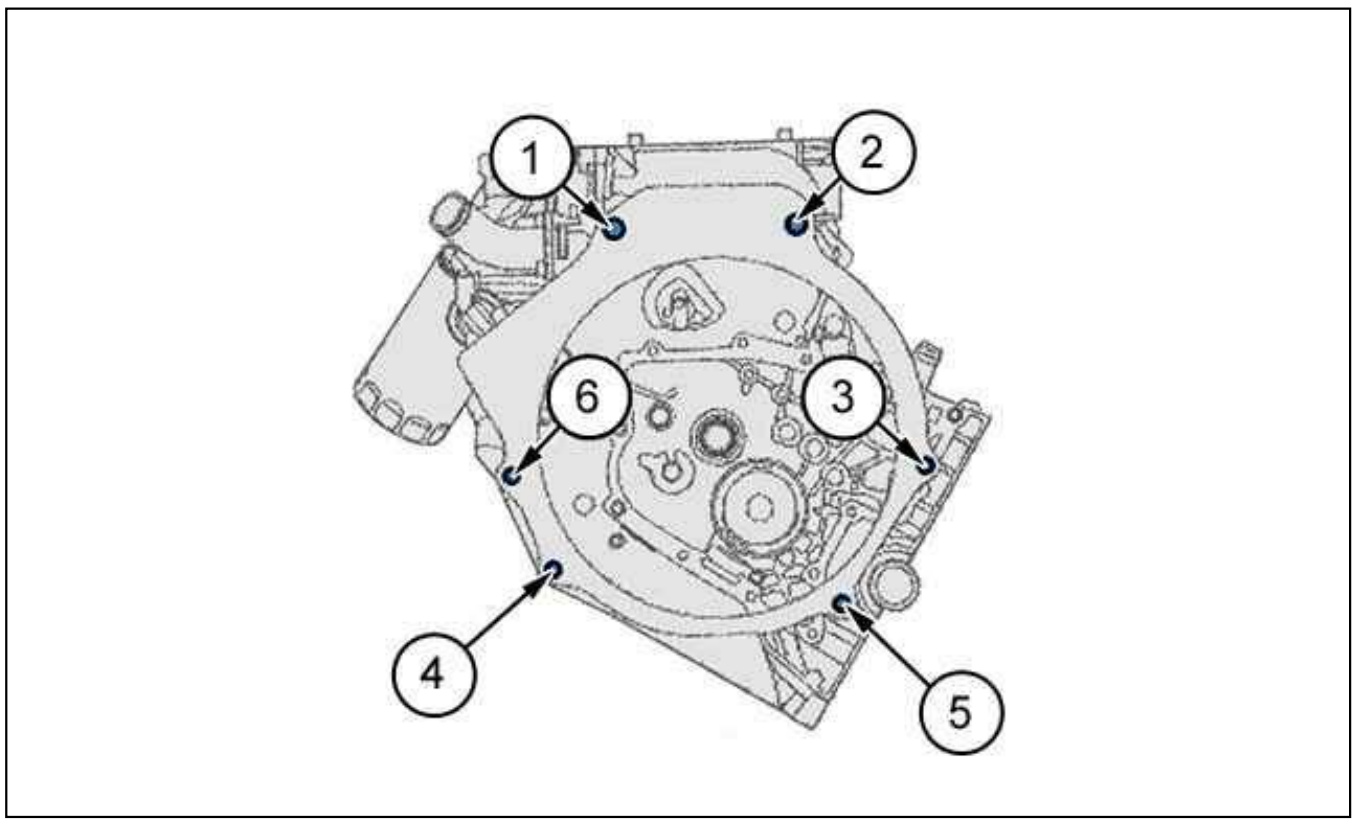

Figure : B2CB0F7D

TIGHTENING TORQUES : M40 MANUAL GEARBOX

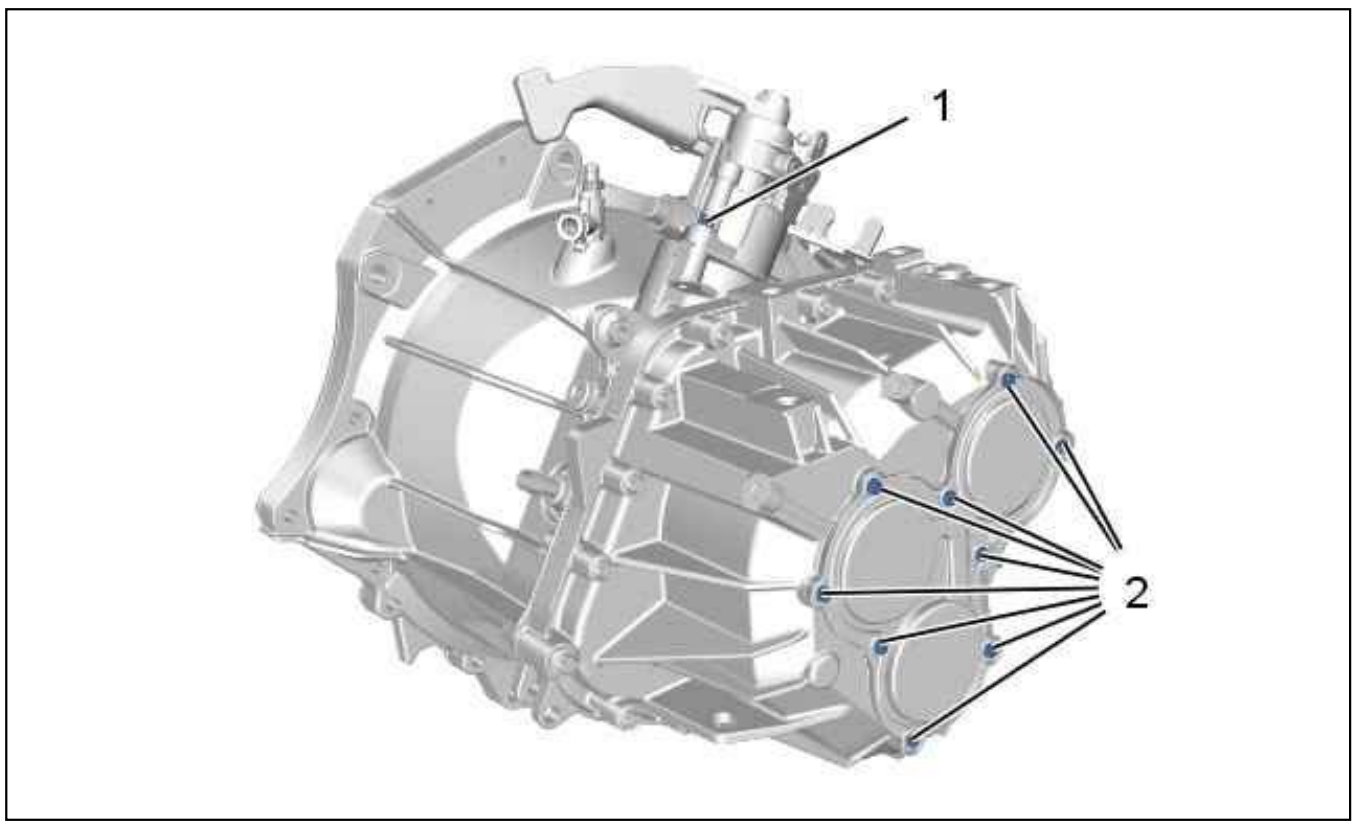

Figure : B2CB05ID

Reference	Designation	Tightening torque
(1)	Gear selection/engagement mechanism bolt	2 daNm
(2)	Cover fixing screw	1 daNm

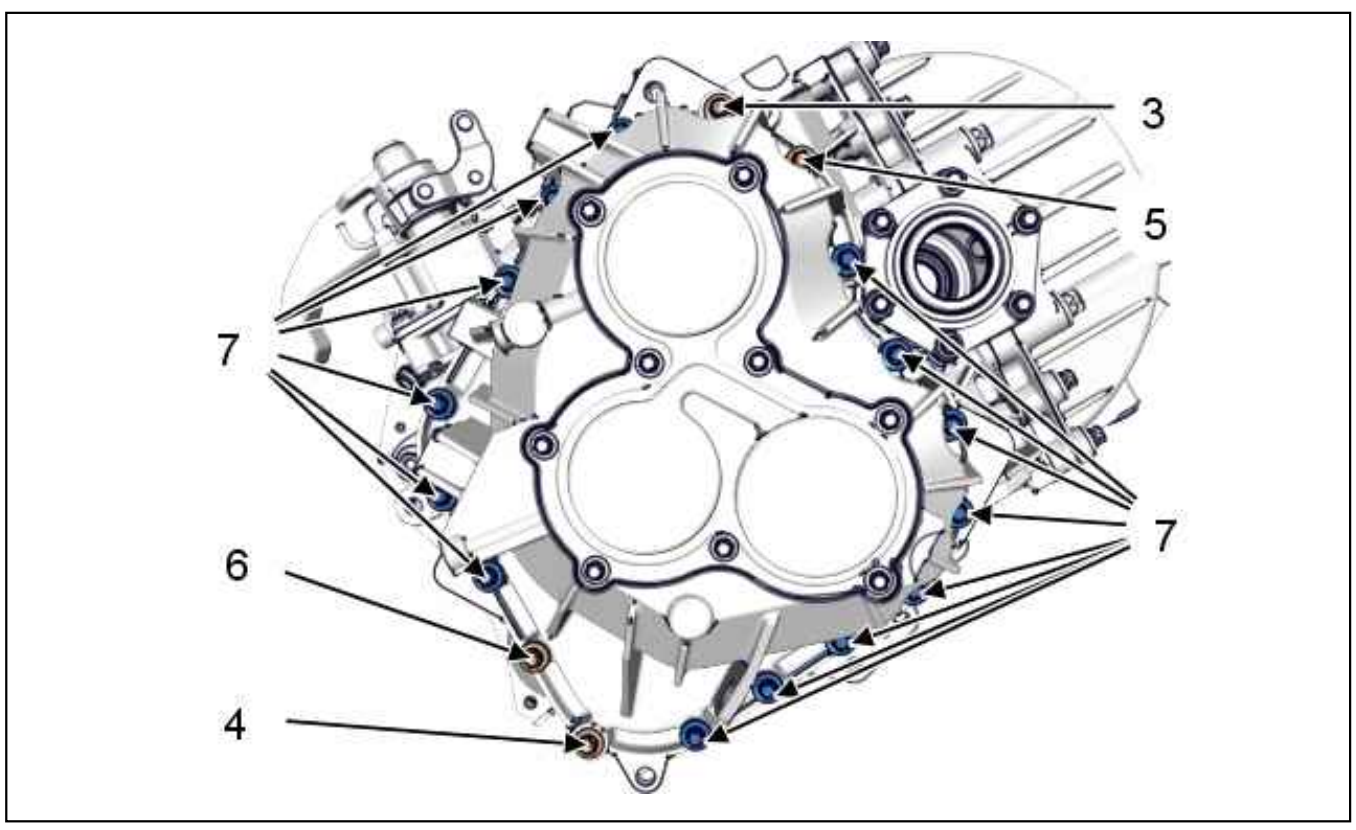

Figure : B2CB05JD

Tightening procedure :

- Observe the order of tightening of the bolts (3), (4), (5), (6), (7) ; Tighten to 1,1 daN.m
- Observe the order of tightening of the bolts (3), (4), (5), (6), (7) ; Tighten to 2,2 daN.m
- Observe the order of tightening of the bolts (3), (4), (5), (6), (7) ; Angular tightening to 30°

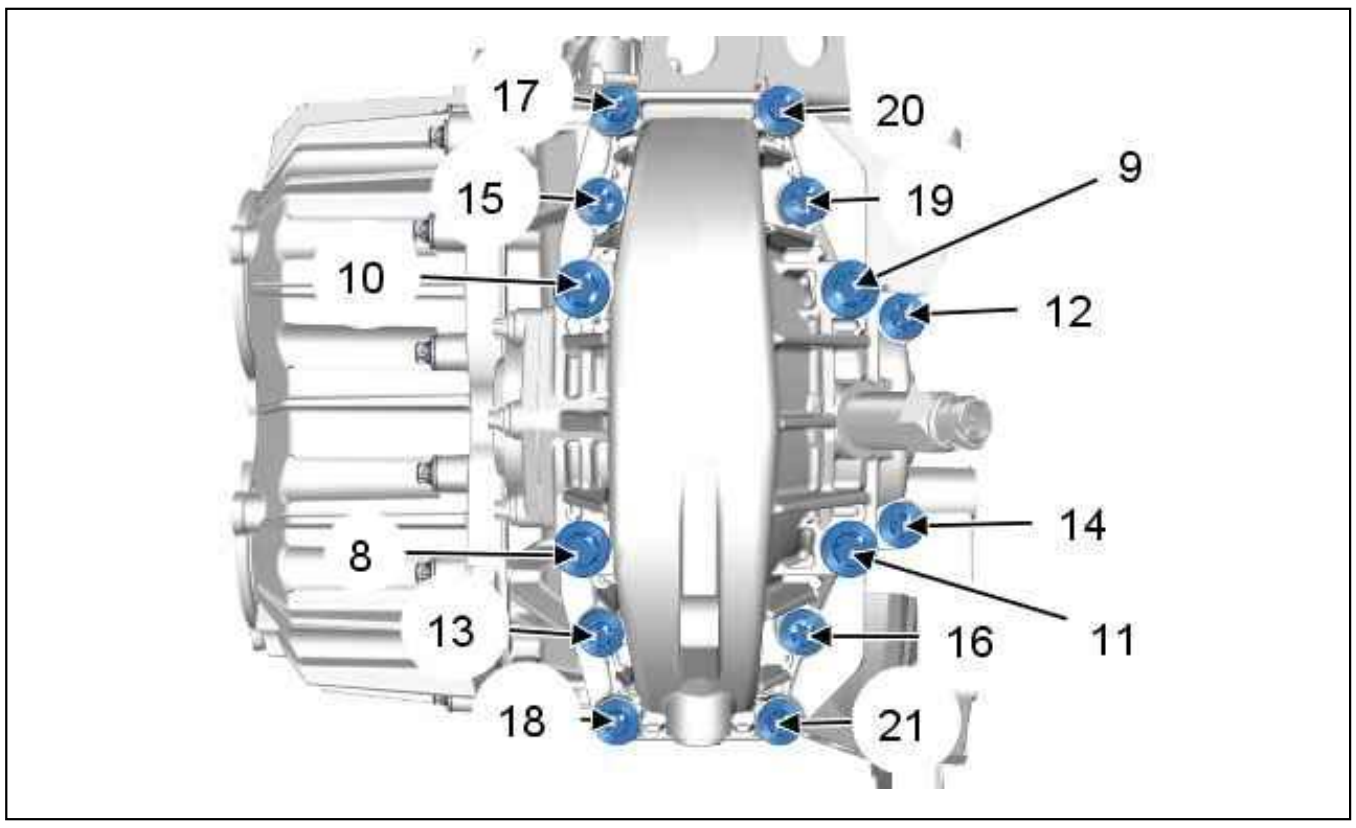

Figure : B2CB05KD

Tightening procedure :

- Observe the order of tightening of the bolts M12 : In the order from 8 to 11 ; Tighten to 11 daN.m
- Observe the order of tightening of the bolts M10 : In the order from 12 to 21 ; Tighten to 5 daN.m

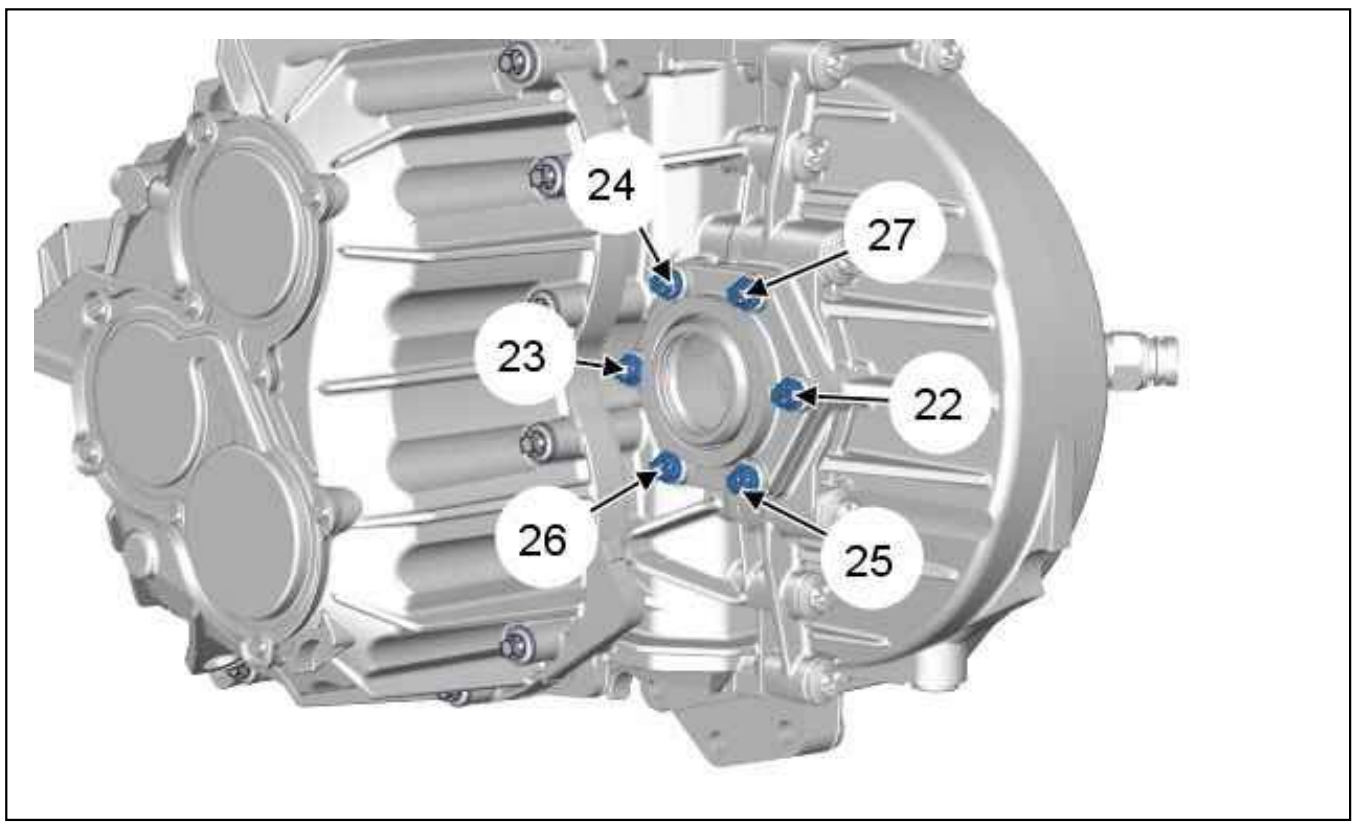

Figure : B2CB05LD

Observe the order of tightening of the bolts M8 : In the order from 22 to 27 ; Tightening torque to 2 da.Nm.

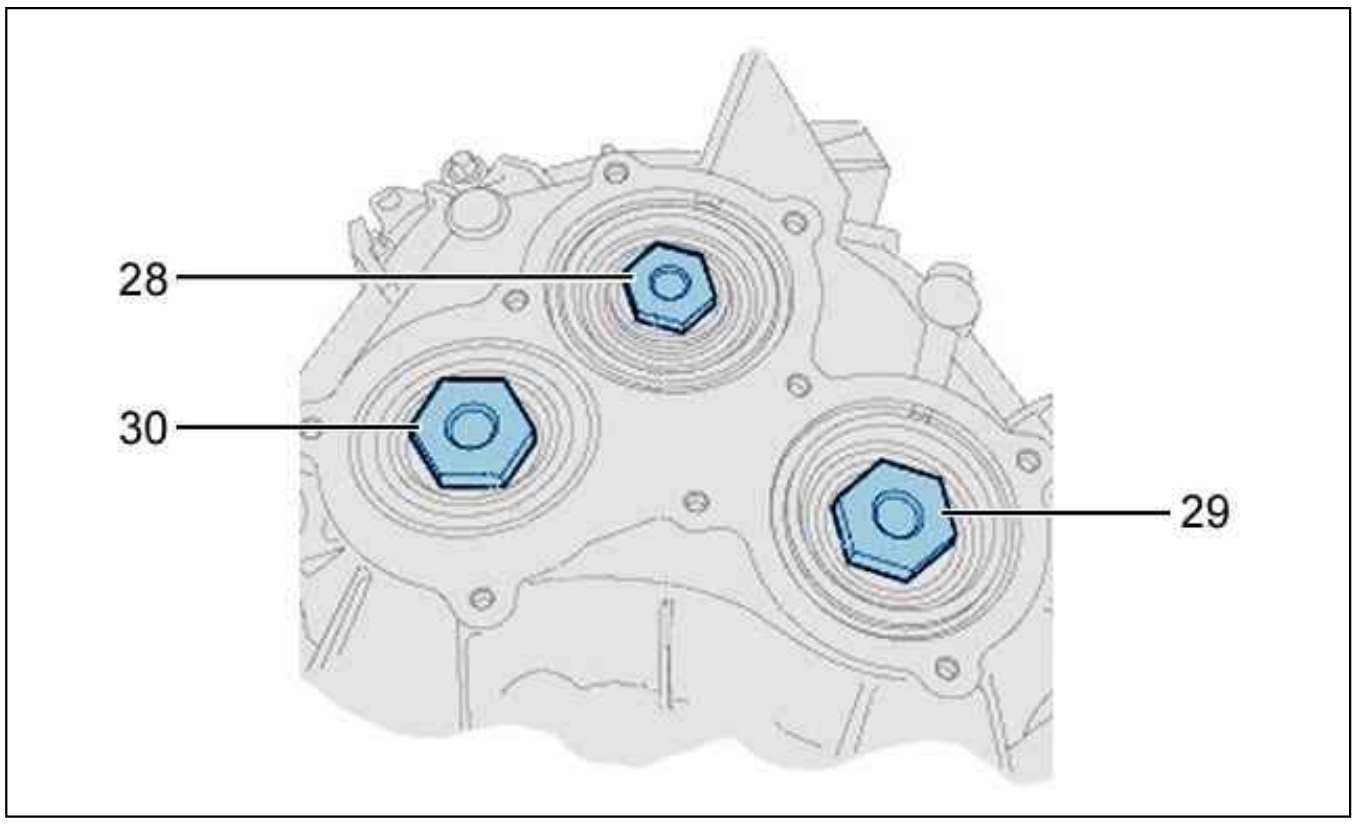

Figure : B2CM00KD

Reference	Designation	Tightening torque
(28)	Gears on upper output shaft fixing bolt (bolts M20)	20 daNm
(29)	Gears on input shaft fixing bolt (bolts M18)	20 daNm
(30)	Gears on lower output shaft fixing bolt (bolts M20)	20 daNm

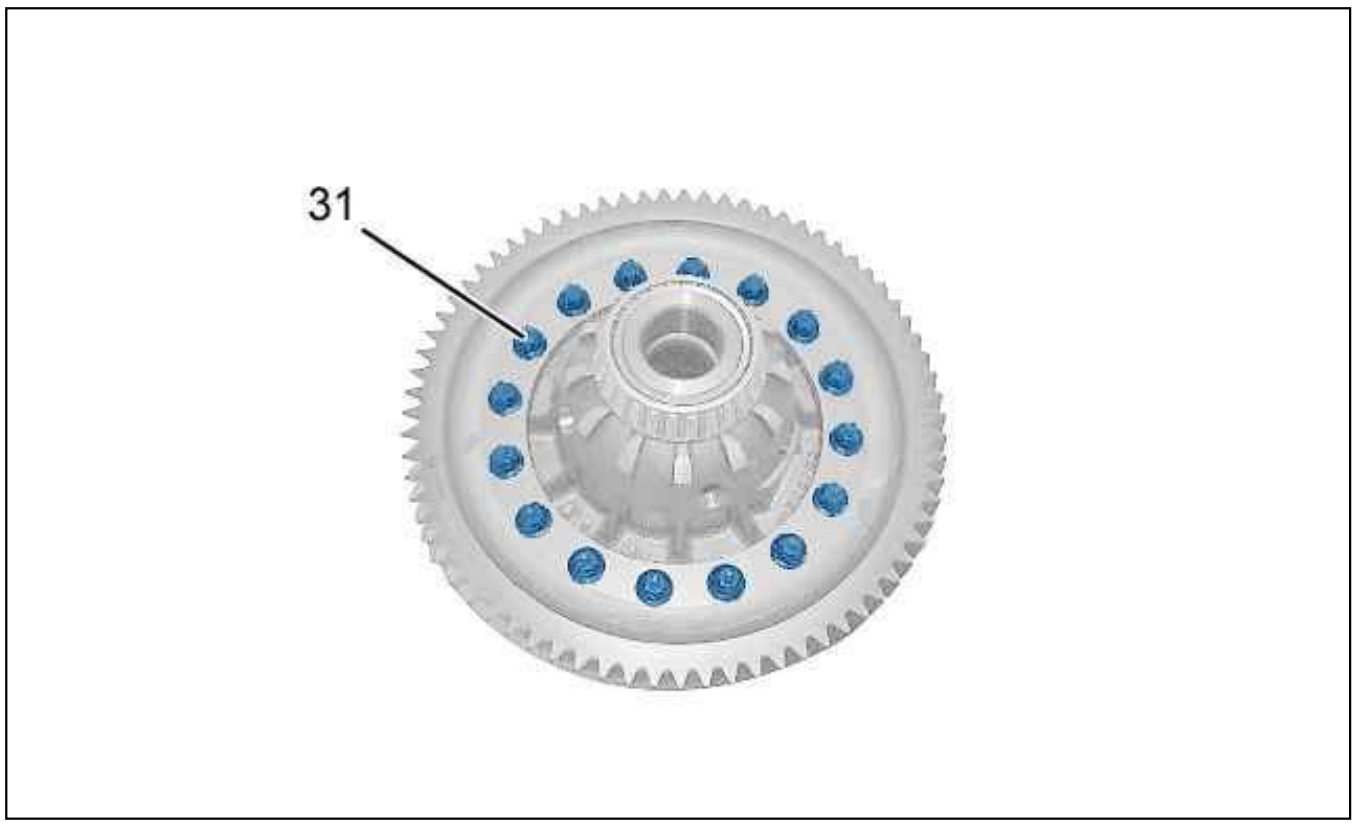

Figure : B2CB0DMD

Reference	Designation	Tightening torque
(31)	Differential ring mounting nut	13 daNm

IDENTIFICATION - DATA : M40 MANUAL GEARBOX

1. Identification

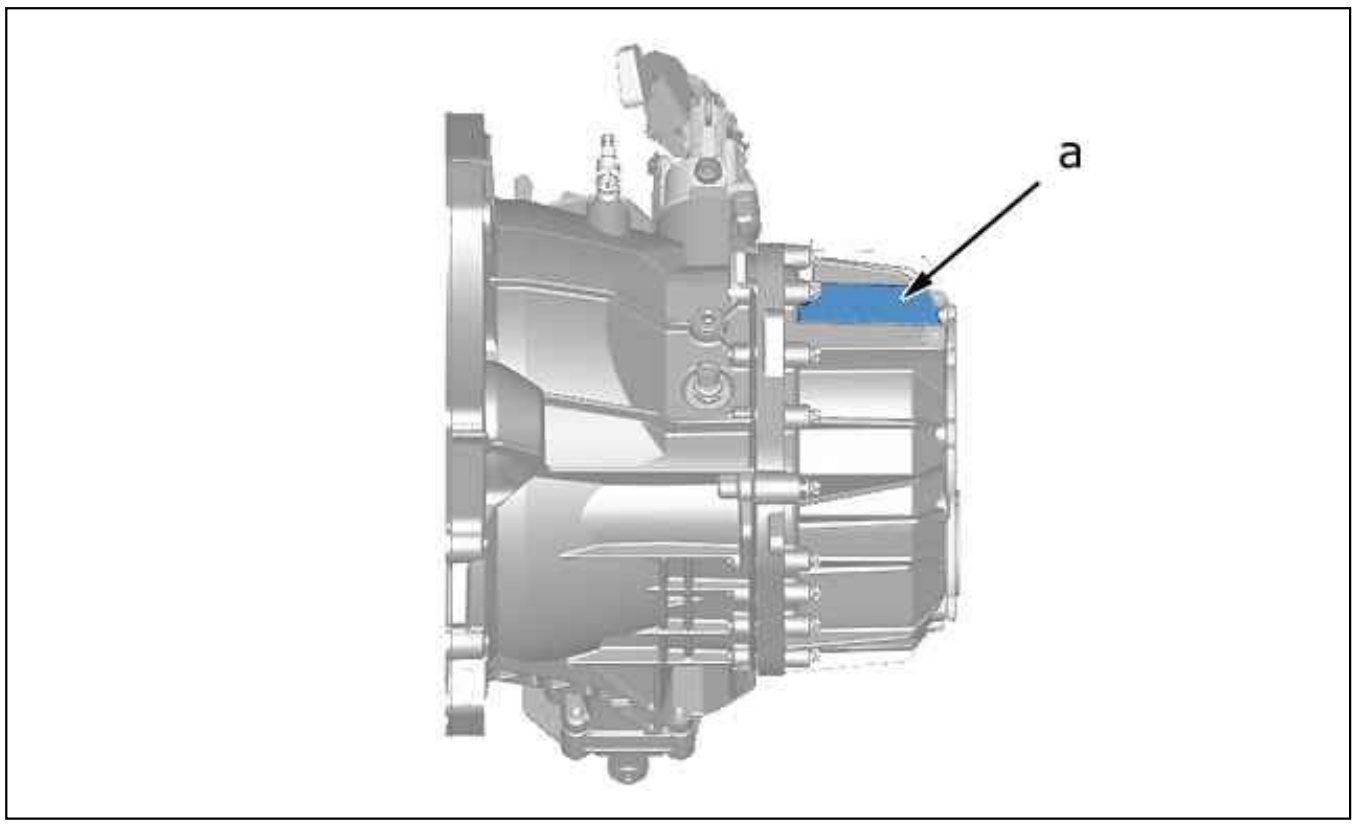

Figure : B2CM00UD

"a" Gearbox reference (For the versions 702, 703, 704).

2. Description

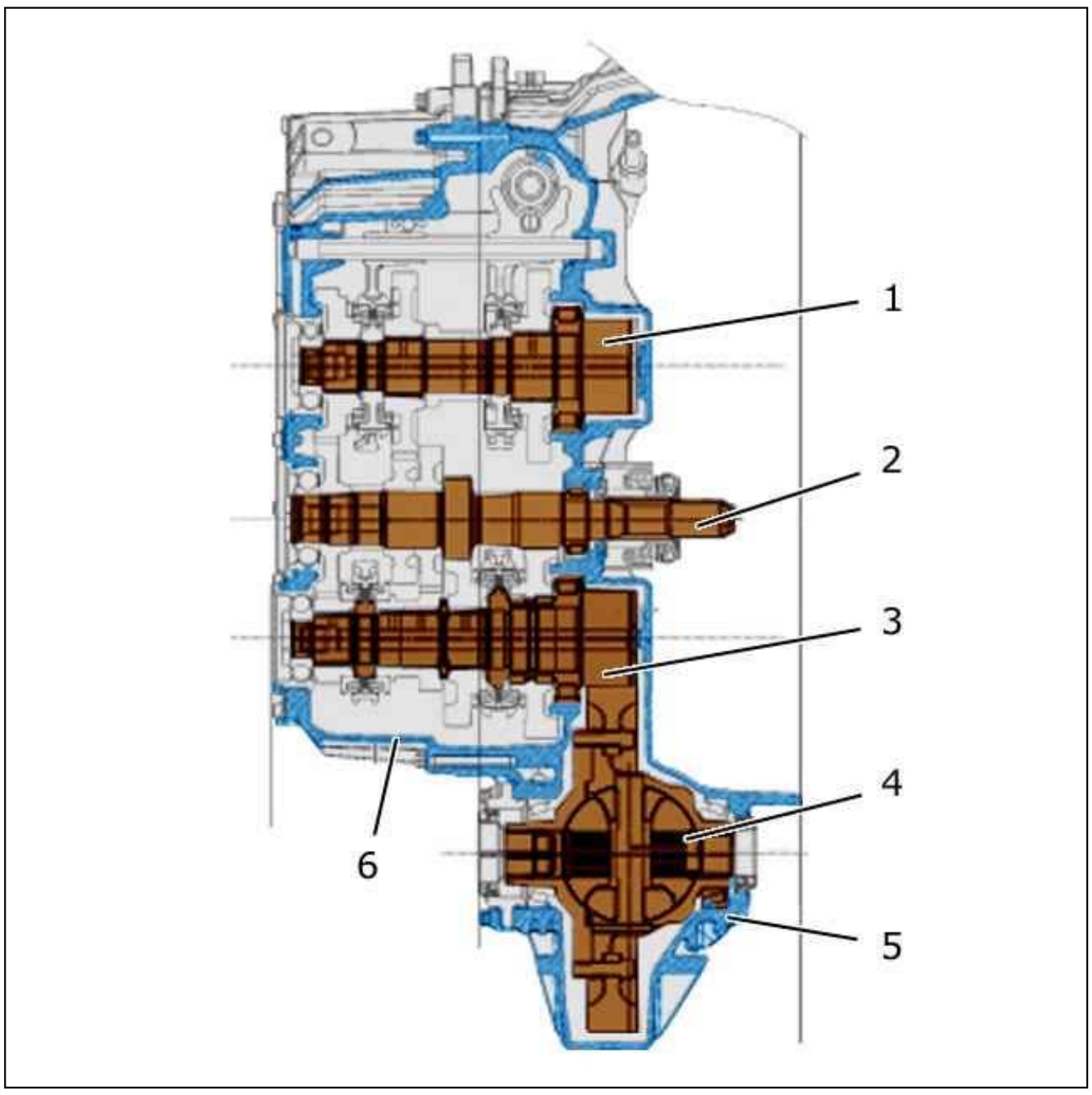

Figure : B2CM00VP

(1) output shaft (top).
(2) input shaft.
(3) output shaft (lower).
(4) Differential assembly.
(5) Differential housing .
(6) Gearbox casing.

3. Application

version	702	703	704
Legislation type	F1C	F1C	F1C
Charge (kg)	1200/1500/1700	1700/2000	1700/2000
engine	SOFIM 3.0	SOFIM 3.0	SOFIM 3.0

4. Gearbox ratios

version	702	703	704
1st	12x50	12x50	12x50
2nd	20x47	20x47	20x47
3rd	52x76	52x76	52x76
4th	67x64	67x64	64x67
5th	59x41	59x41	56x44
6th	67x37	67x37	64x40
Reverse gear	12x49	12x49	12x49
crown wheel and pinion	18x76	16x73	16X73
Speedometer drive gear	12 teeth	12 teeth	12 teeth

5. Gear selector shafts and mechanism

Reconfiguration of the gearbox is of transverse type (3 shafts and differential).

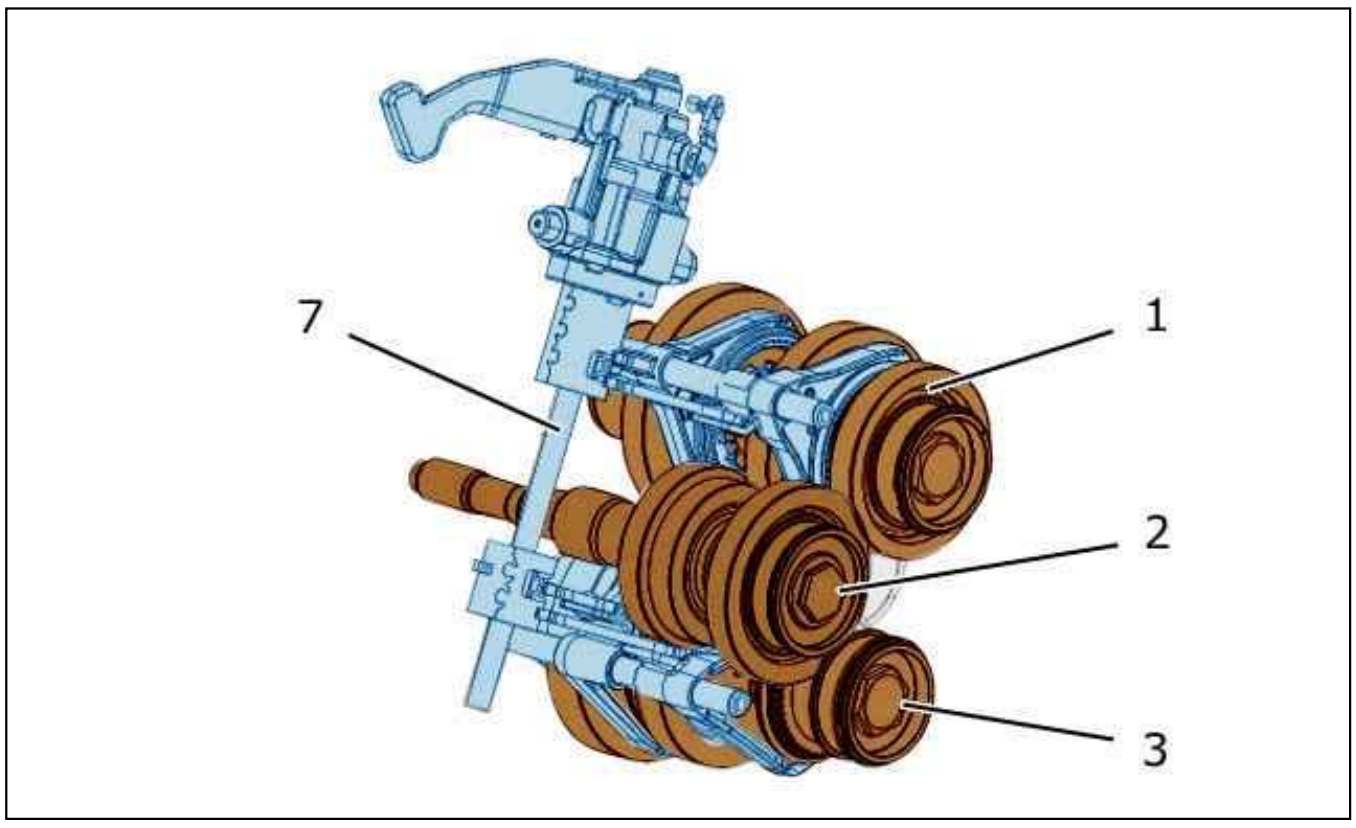

Figure : B2CM00WD

(1) output shaft (top).
(2) input shaft.
(3) output shaft (lower).
(7) Gearbox ratio selection mechanism.

5.1. input shaft

Compiling : input shaft :

- 1st and 2nd gear gear wheels (machined directly on the shaft)
- 3rd, 4th, 5th and 6th gear gear wheels (fitted to the shaft)

The primary shaft is guided by :

- A front roller bearing
- A rear ball bearing

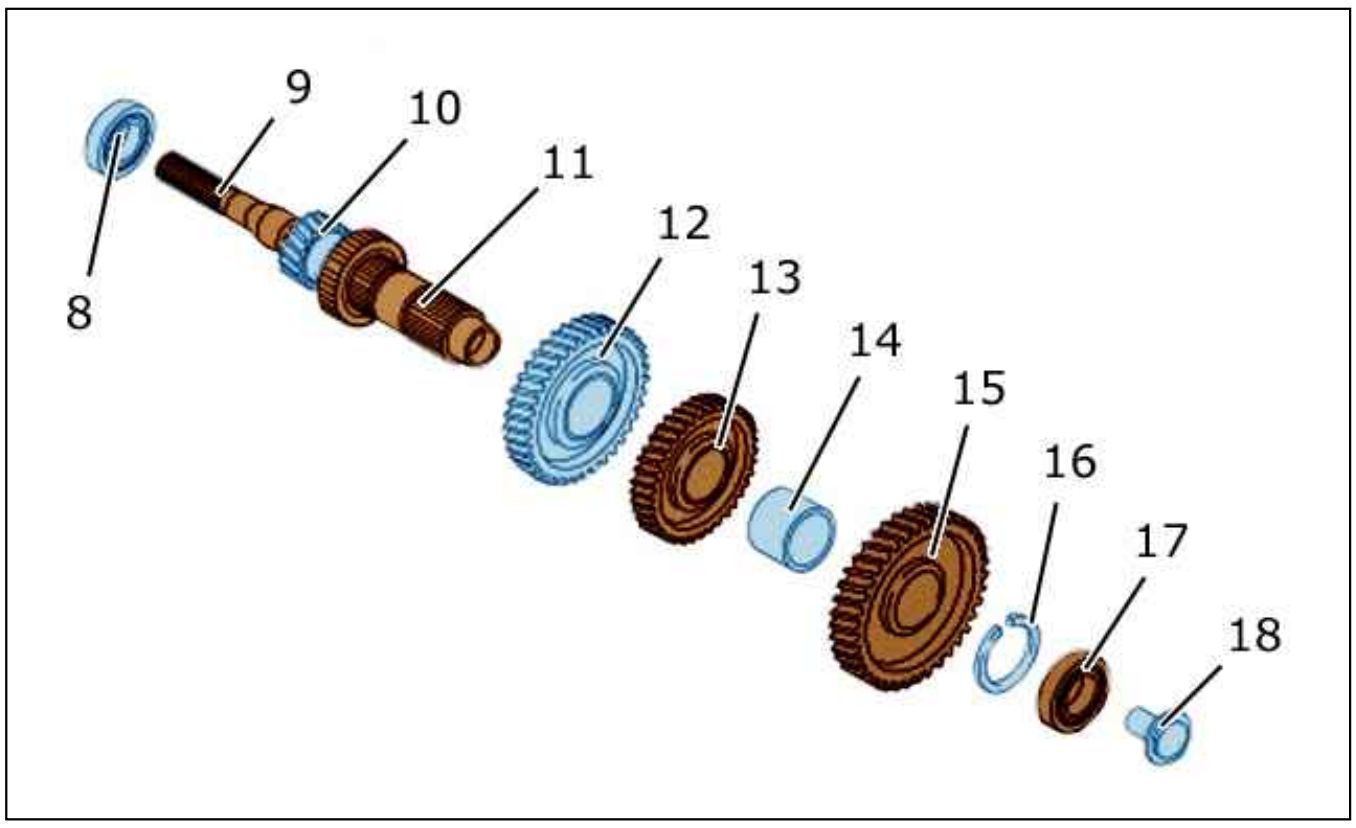

Figure : B2CM00XD

(8) Front roller bearing.
(9) input shaft.
(10) Gear wheel : 1st gear (Machined on the shaft).
(11) Gear wheel : 2nd speed (Machined on the shaft).
(12) Driving gear : Fifth gear.
(13) Driving gear : 3rd speed.
(14) spacer .
(15) Driving gear : 4th - 6th gear.
(16) Snap ring.
(17) Rear ball bearing.
(18) Gear wheel fixing fitting.

5.2. output shaft (top)

The upper secondary shaft consists of the reverse gear wheels (third and fourth gear).
The upper secondary shaft is guided by :

- A front roller bearing
- A rear ball bearing

The reverse gear wheel is driven by the first gear wheel fitted to the lower secondary shaft.

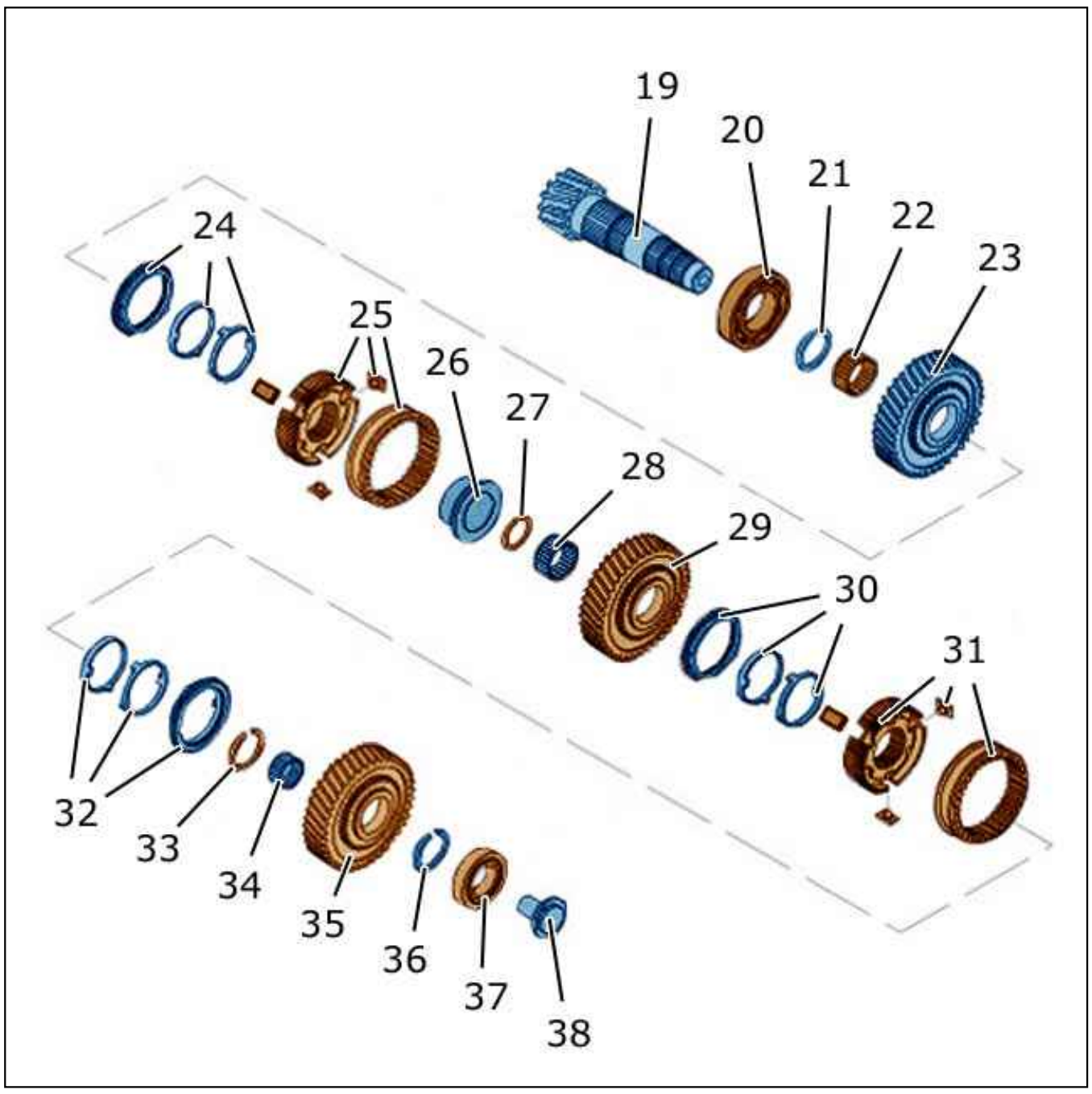

Figure : B2CM00YP

(19) output shaft (top).
(20) Front roller bearing.
(21) Snap ring.
(22) Needle cage.
(23) The reverse gear driven gear wheel.
(24) Synchronisation rings : Reverse gear .
(25) Reverse gear synchronizer.
(26) spacer .
(27) Snap ring.
(28) Needle cage.
(29) 3rd gear driven gear wheel.
(30) Synchronisation rings : 3rd speed.
(31) synchronizer (third and fourth gear).
(32) Synchronisation rings : Fourth gear.
(33) Snap ring.
(34) Needle cage.
(35) 4th gear driven gear wheel.
(36) Snap ring.
(37) Rear ball bearing.
(38) Gear wheel fixing fitting.

5.3. output shaft (lower)

The lower secondary shaft consists of the gear wheels of 1st, 2nd, 5th and 6th gears.
The lower secondary shaft is guided by :

- A front roller bearing
- A rear ball bearing

The first gear gear wheel transmits the movement to that of the reverse gear fitted to the upper secondary shaft.

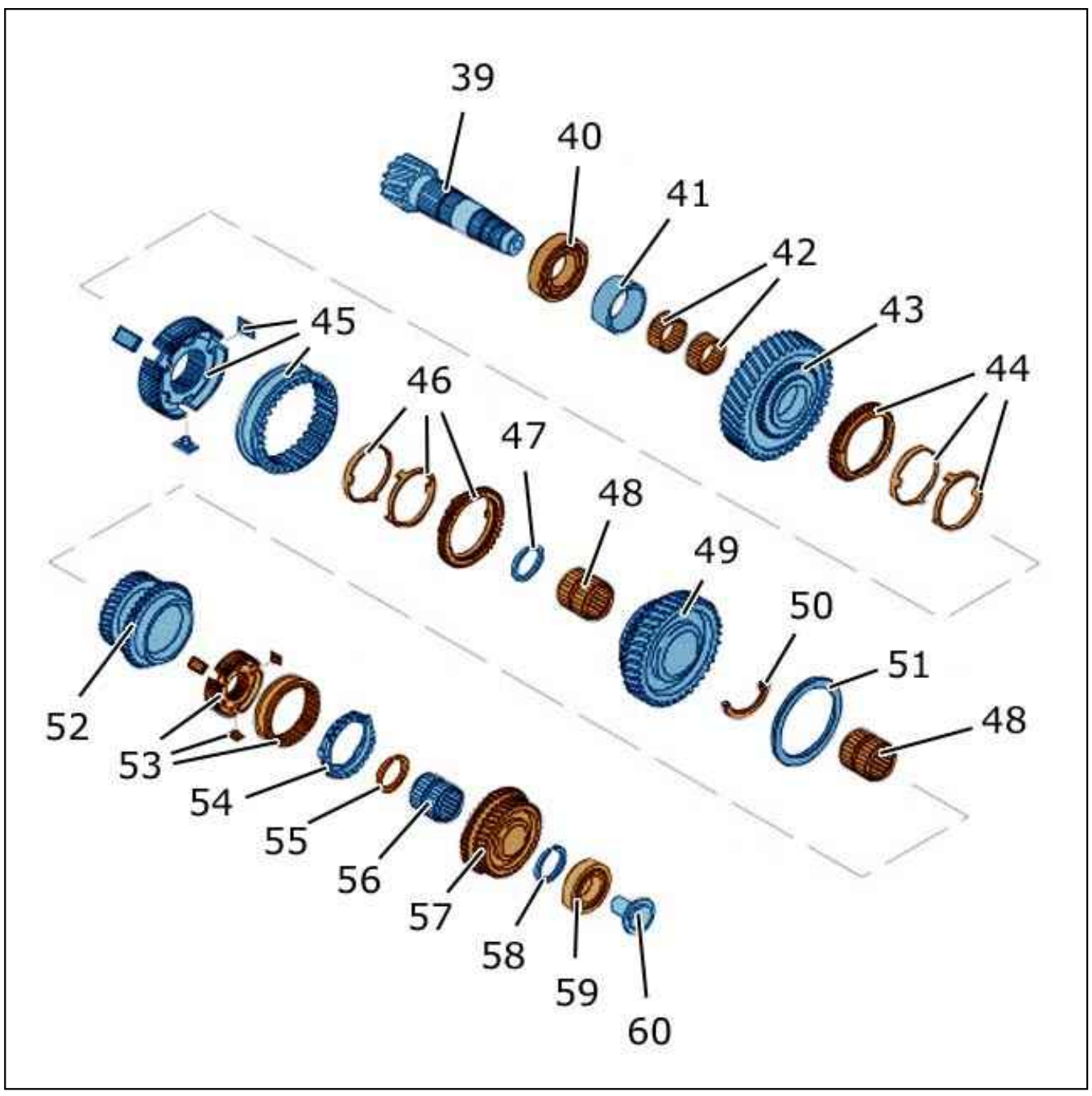

Figure : B2CM00ZP

(39) output shaft (lower).
(40) Front roller bearing.
(41) spacer .
(42) Needle cage.
(43) 1st gear driven gear wheel.
(44) Synchronisation rings : 1st gear.
(45) synchronizer (1st and 2nd gears).
(46) Synchronisation rings : 2nd speed.
(47) Snap ring.
(48) Needle cage.
(49) 2nd gear driven gear wheel.
(50) Half ring.
(51) Shim ring.
(52) Fifth gear driven gear wheel.
(53) synchronizer (fifth and sixth gear).
(54) Synchronisation ring : 6th gear.

(55) Snap ring.
(56) Needle cage.
(57) 6th gear driven gear wheel.
(58) Snap ring.
(59) Rear ball bearing.
(60) Gear wheel fixing fitting.

6. Gear wheels

The gear wheels have HCR (High Contact Ratio) helocoidal teeth.
The lubrication of the gear trains and moving plants inside the gearbox is dynamic.
The oil taken through openings and ducts on the hollow secondary shafts means :

- Better efficiency the transmission of the torque and significantly reduced wear
- Good manoeuvrability at a low temperature through the use of a multigrade synthetic oil

6.1. Synchronizers

The synchronizers have floating rings made of brass (Type BORG-WARNER).
Arrangements : Synchronizers :

- The reverse gear, 3rd and 4th gear synchronizers are on the upper secondary shaft
- The synchronizers of 1st, 2nd, 5th and 6th gears are on the lower secondary shaft

synchronizer (1st and 2nd gears).

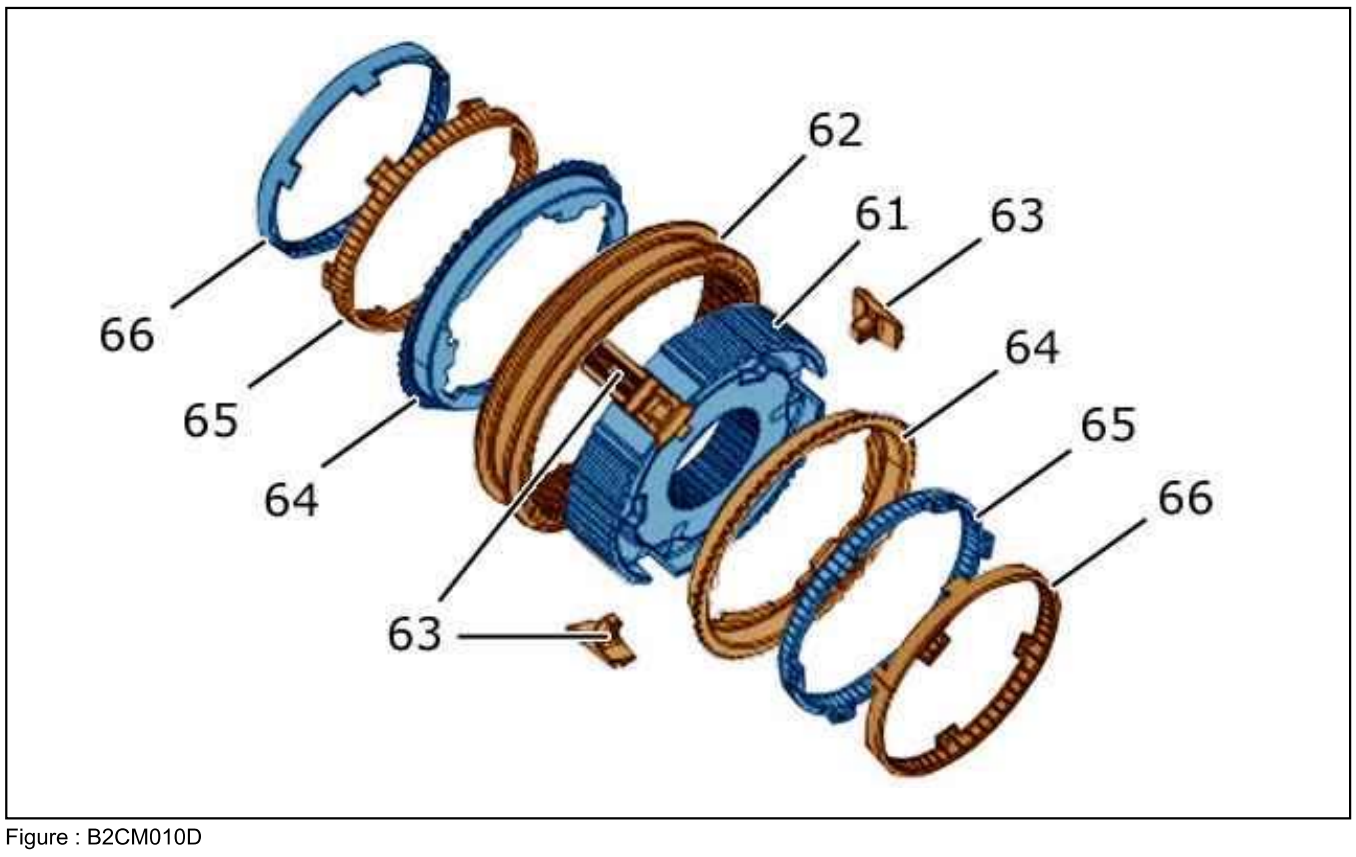

Figure : B2CM010D

(61) hub.
(62) Clutch engagement sleeve.
(63) Pre-synchronisation detent.
(64) Synchronizer ring : External.
(65) Synchronizer ring : Intermediate.
(66) Synchronizer ring : Internal.
synchronizer (third and fourth gear).

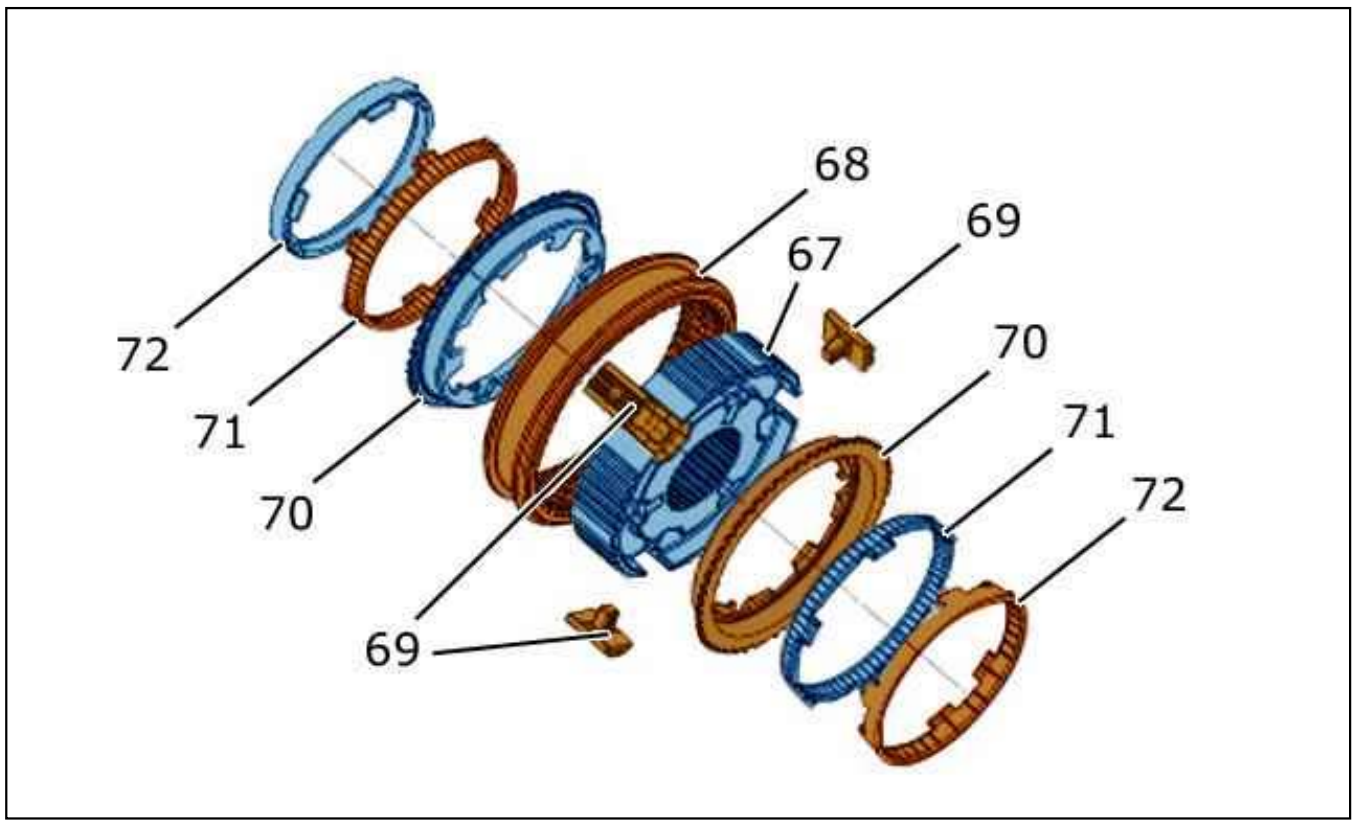

Figure : B2CM011D

(67) hub.
(68) Clutch engagement sleeve.
(69) Pre-synchronisation detent.
(70) Synchronizer ring : External.

(71) Synchronizer ring : Intermediate.
(72) Synchronizer ring : Internal.
synchronizer (fifth and sixth gear).

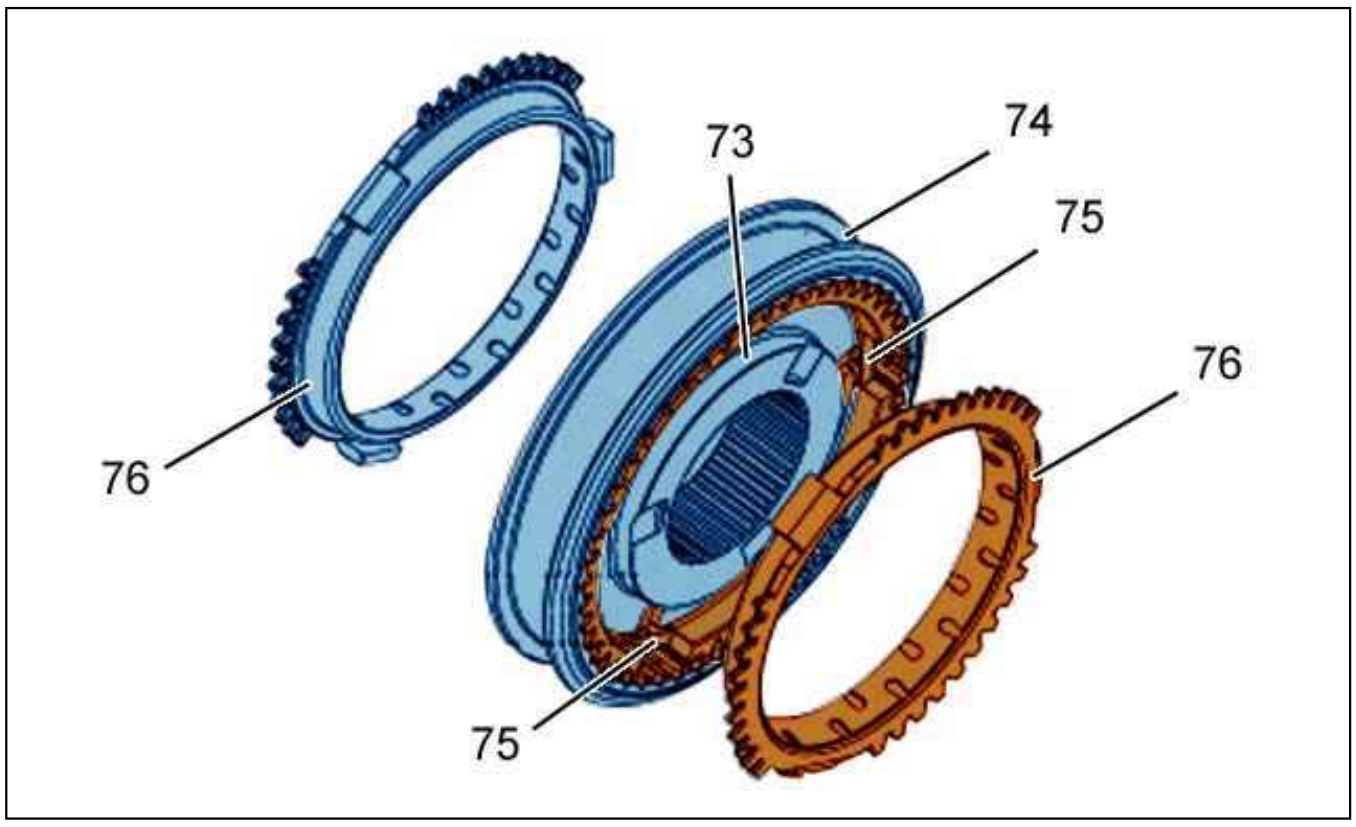

Figure : B2CM012D

(73) hub.
(74) Clutch engagement sleeve.
(75) Pre-synchronisation detent.
(76) Synchronizer ring.
Reverse gear synchronizer.

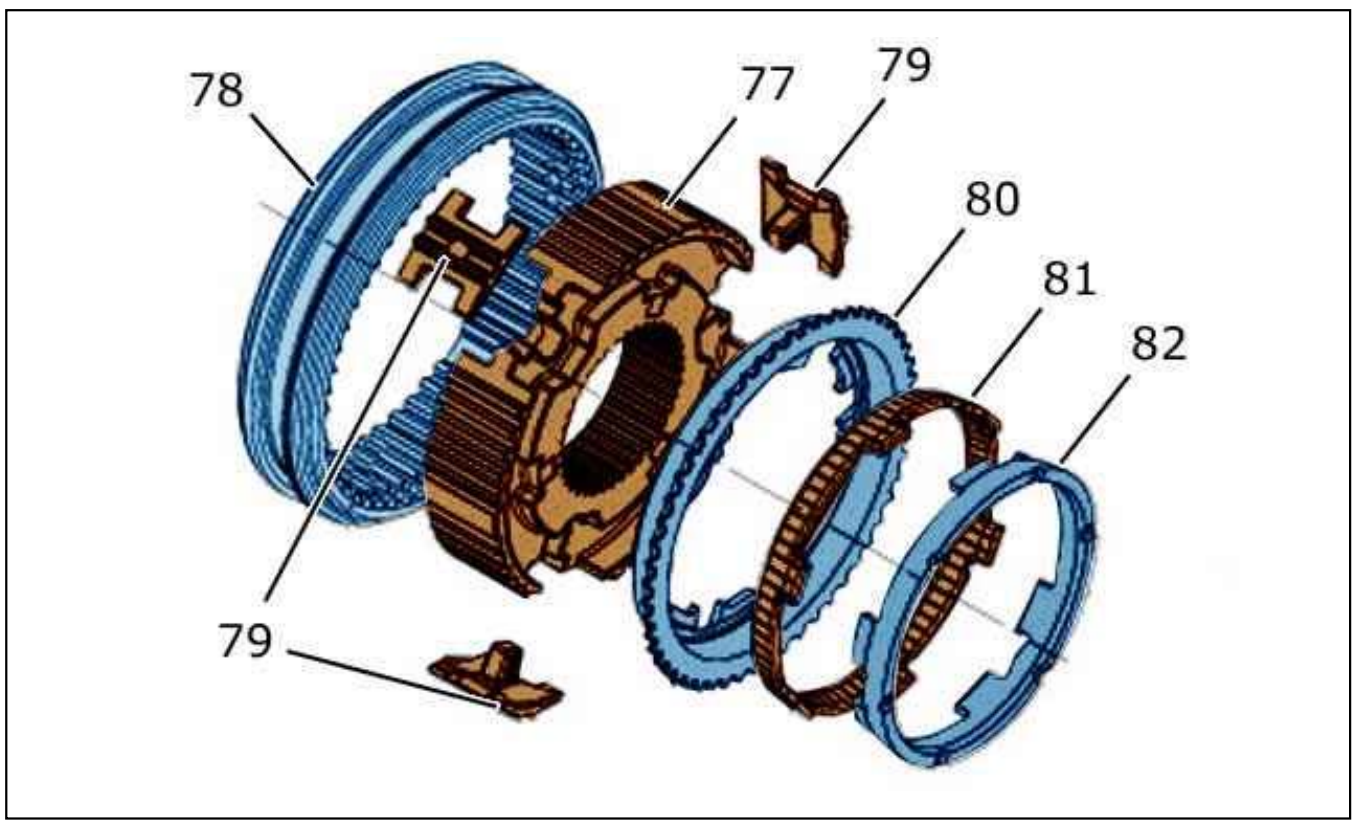

Figure : B2CM013D

(77) hub.
(78) Clutch engagement sleeve.
(79) Pre-synchronisation detent.
(80) Synchronizer ring : External.
(81) Synchronizer ring : Intermediate.
(82) Synchronizer ring : Internal.

6.2. differential

The differential unit is placed in the rear part of the gearbox.
Compiling - differential :

- A cylindrical gear reduction drive
- A differential unit constructive in the single part that contains the sun gear and satellite gear wheels

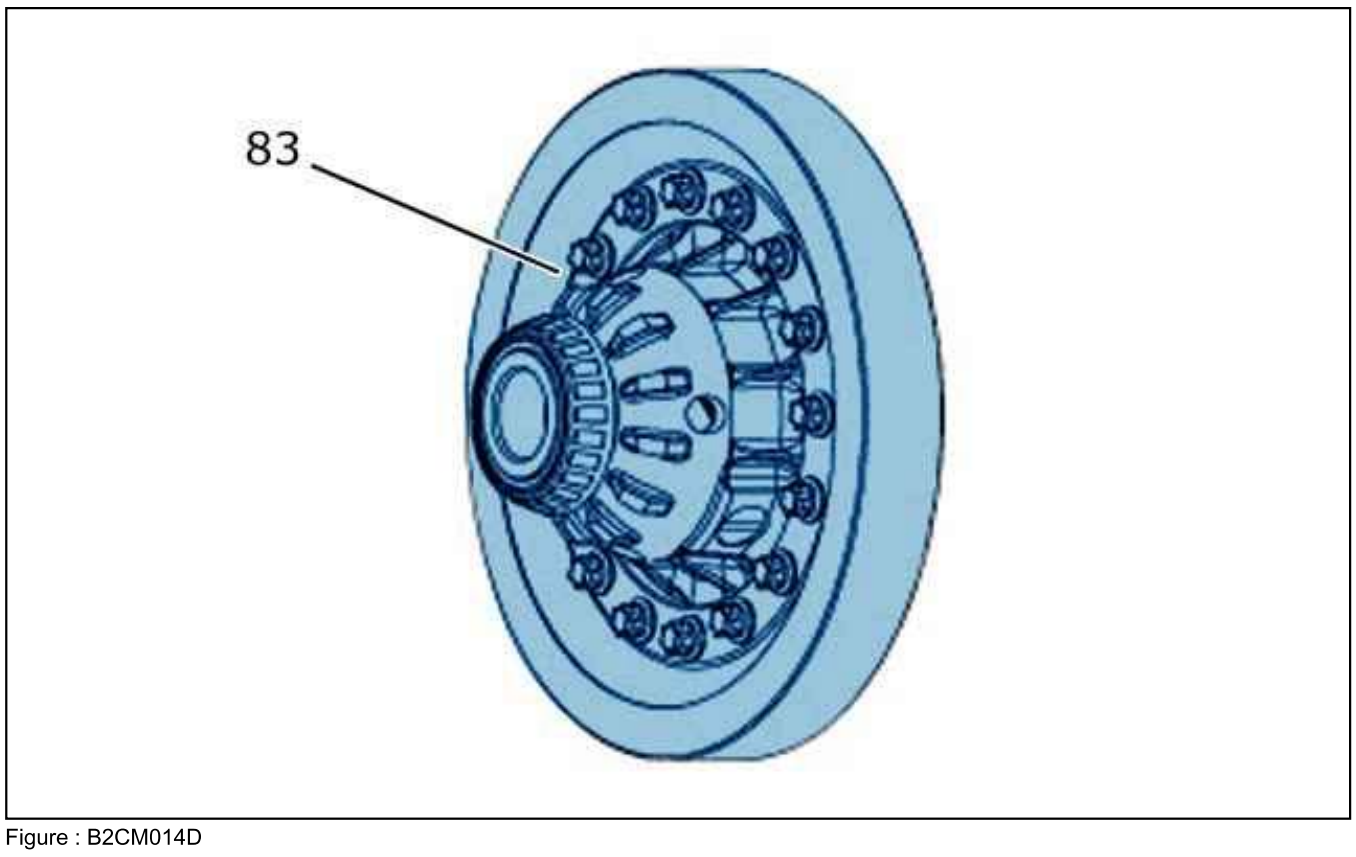

Figure : B2CM014D

(83) differential.
The differential is guided by 2 conical roller bearings.
On the inside the sun wheels have a splined profile in which engage the two seals linked to the two half shafts that transmit the movement to the wheels.
The satellites and the sun gears have a hemispherical rear surface.
Special shims are fitted between the gear wheels and the differential casing.

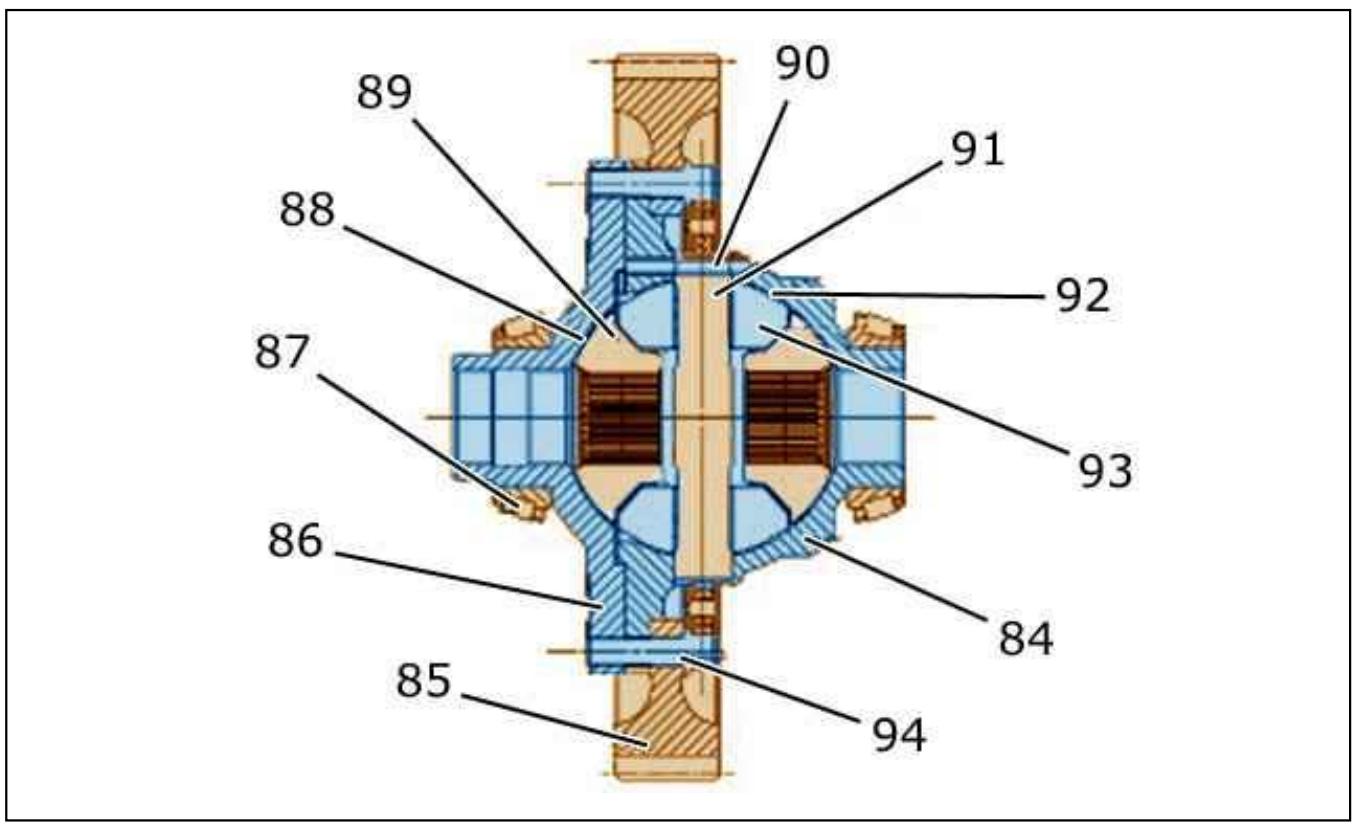

Figure : B2CM015D

(84) Differential housing .
(85) Cylindrical final drive.
(86) Differential cover.
(87) Conical bearings.
(88) Sun wheel bearing.
(89) Sunwheel .
(90) Satellite carrier shaft stop pin.
(91) Satellite carrier shaft.
(92) Satellite bearing.
(93) Satellite .
(94) fixing screws : Cylindrical final drive.

7. Lubrication

Oil capacity : 2,9 litres.
Oil quality : TOTAL TRANSMISSION BV SAE 75 W 80 API GL-4.
Checking interval : None.
Check the oil level : None.

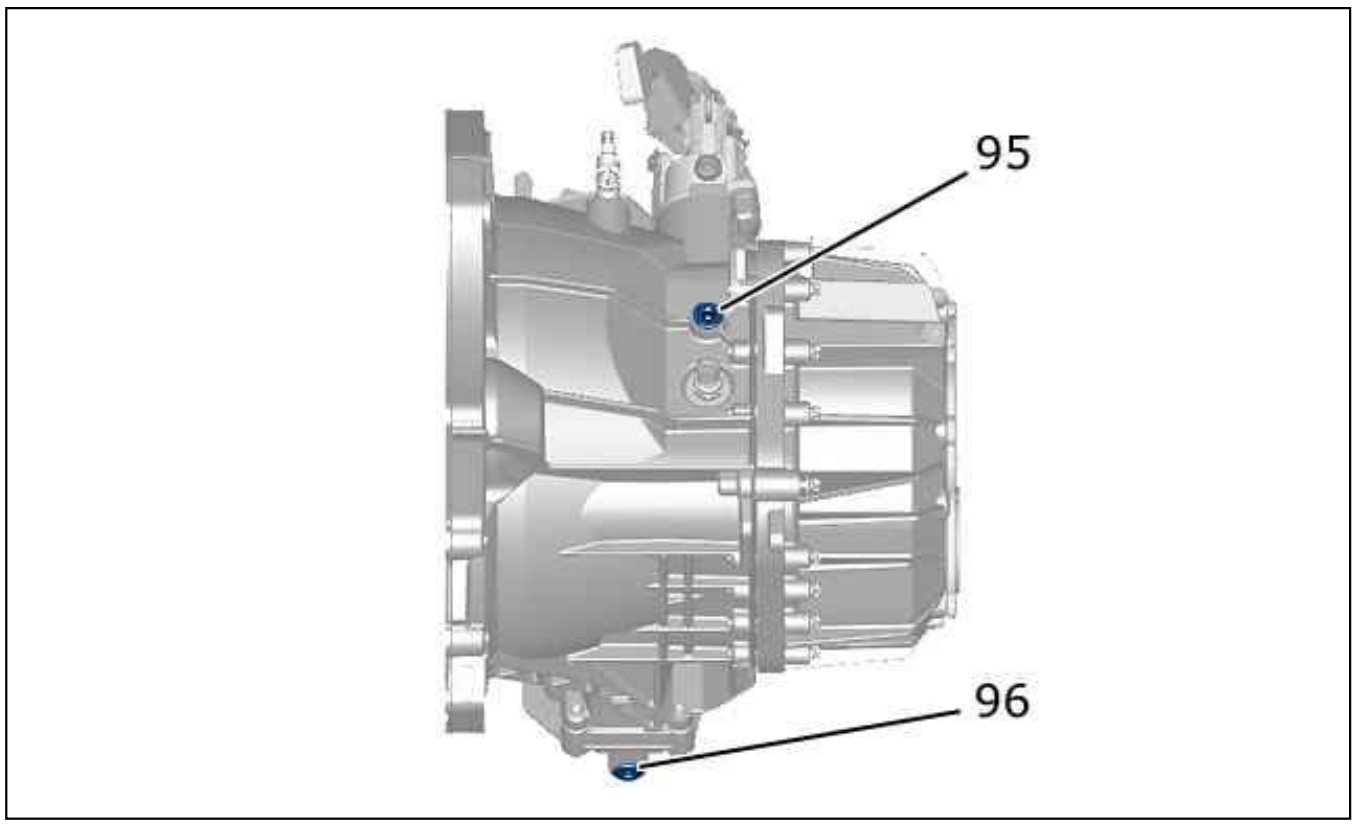

Figure : B2CM016D

Operations to be performed : Fill the gearbox :

- Remove the filler plug (95)
- Refill ; Using an oil filling cylinder (-).0344
- Fit the oil filler plug (95) : Tighten to 1 ± 0,1 daN.m

Operations to be performed : Drain the gearbox :

- Remove the drain plug (96)
- Engine flywheel retaining pin (96) ; Tighten to 5 ± 0,5 daN.m

CAUTION : It is necessary to drain the gearbox and put back the exact quantity of oil, in the event of an external leak or a repair.

REMOVING - REFITTING : DRIVESHAFT SEAL

ESSENTIAL : Observe the safety and cleanliness recommendations.

1. Recommended tools

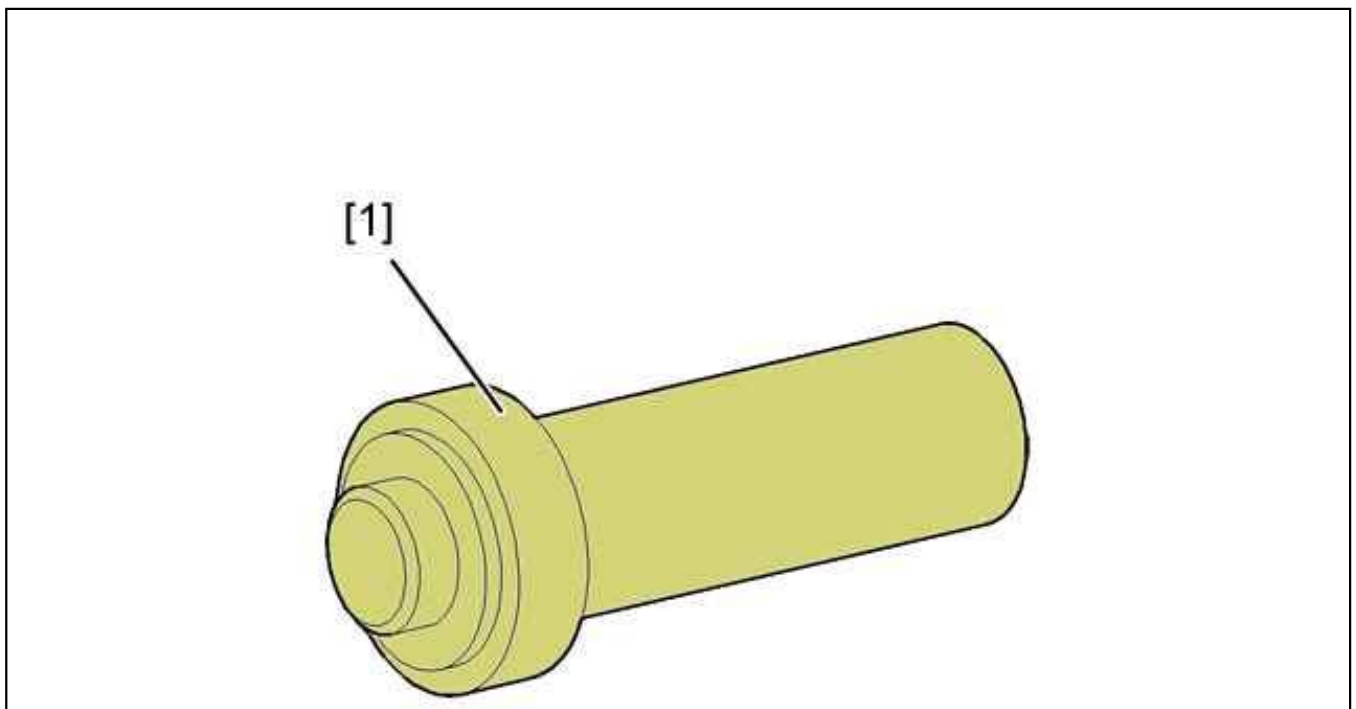

Figure : E5AP33ZD

[1] Left-hand differential seal fitting drift (-).0332-B.

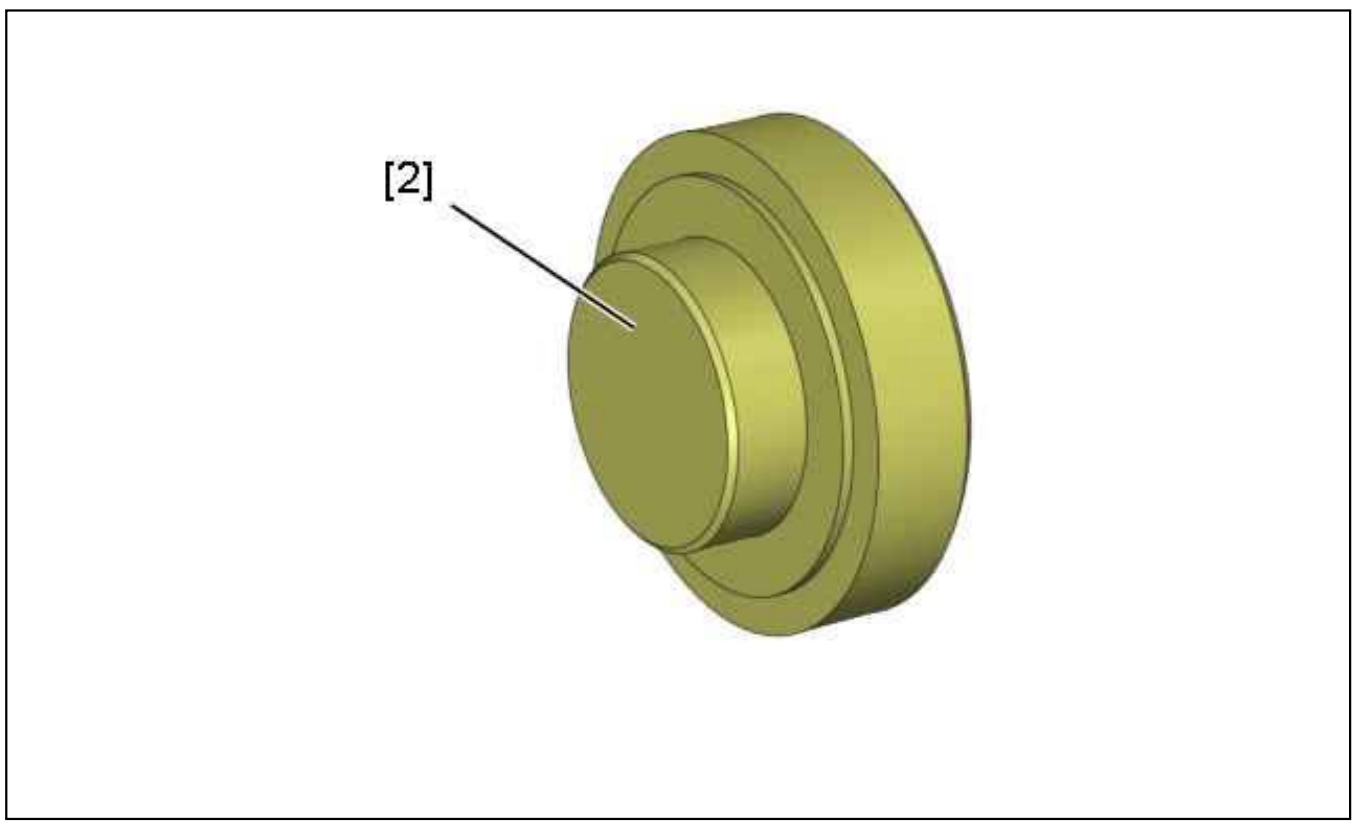

Figure : E5AM0EUD

[2] Right-hand differential seal fitting drift	(-).0330-M	5708-T.M

2. Removing

Put the vehicle on a hoist.
Drain the gearbox .
Remove the drive shafts .

2.1. On the left-hand side

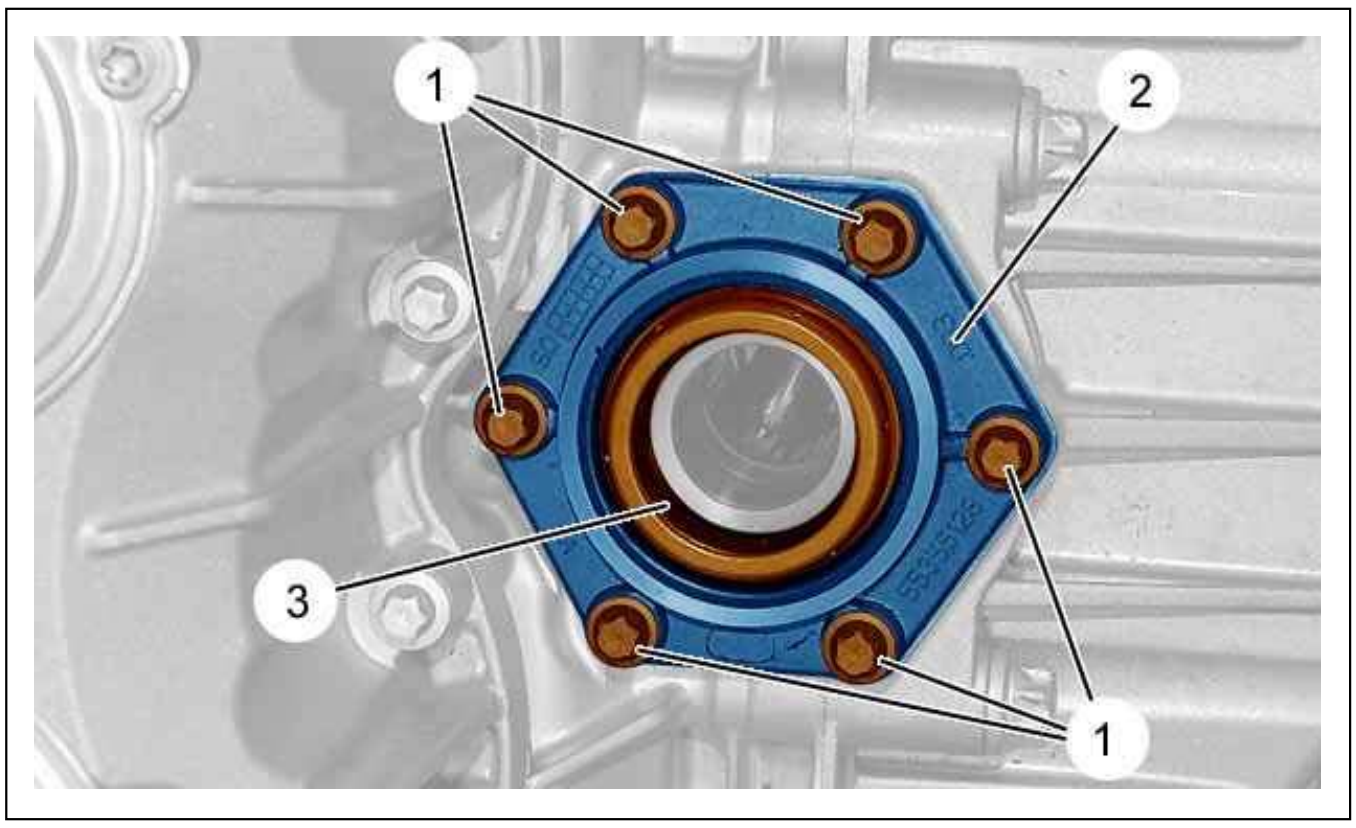

Figure : B2CM09SD

Remove :

- The 6 bolts (1)
- The differential bearing lock plate (2)
- The left-hand driveshaft seal (3)

2.2. On the right-hand side

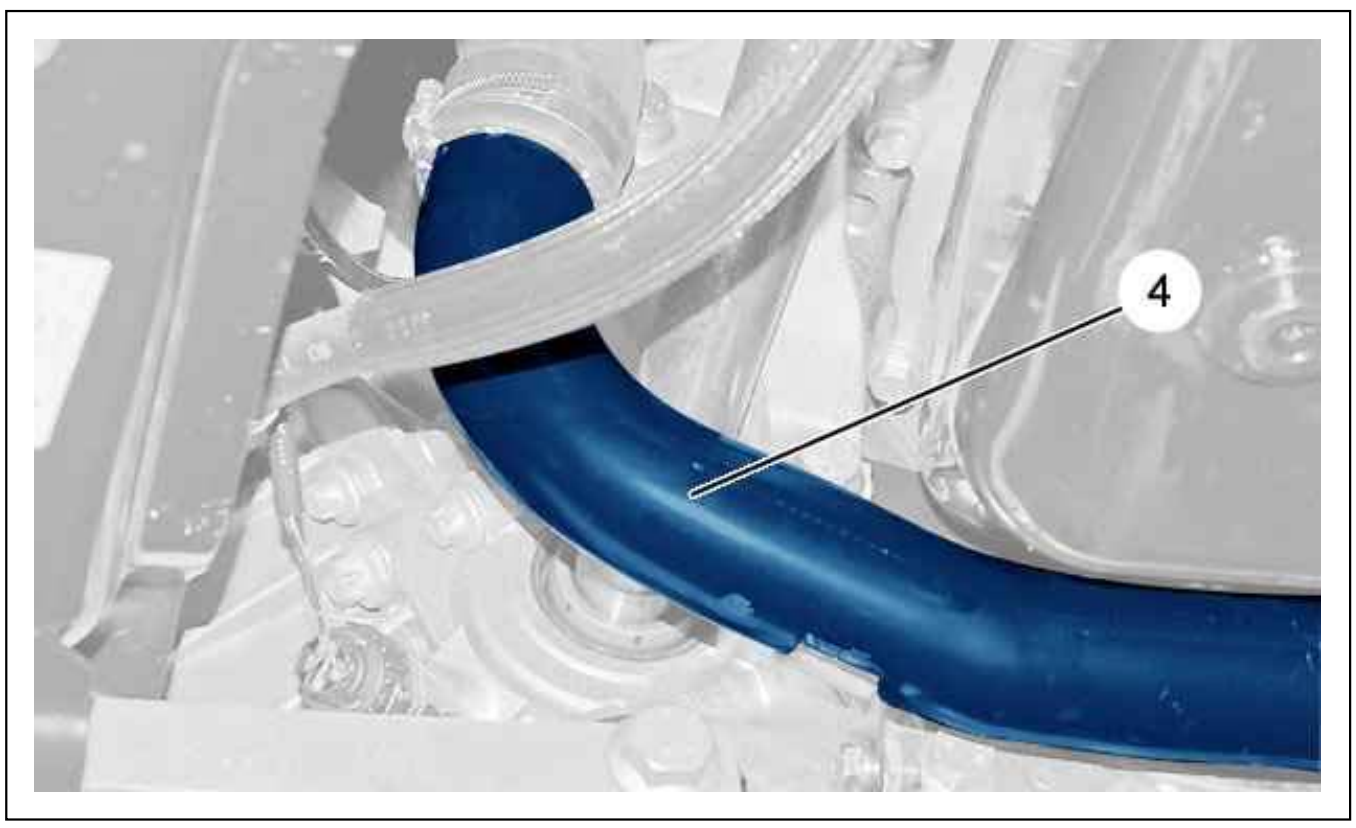

Figure : B2CM09TD

Remove : The turbo air outlet pipe (4).

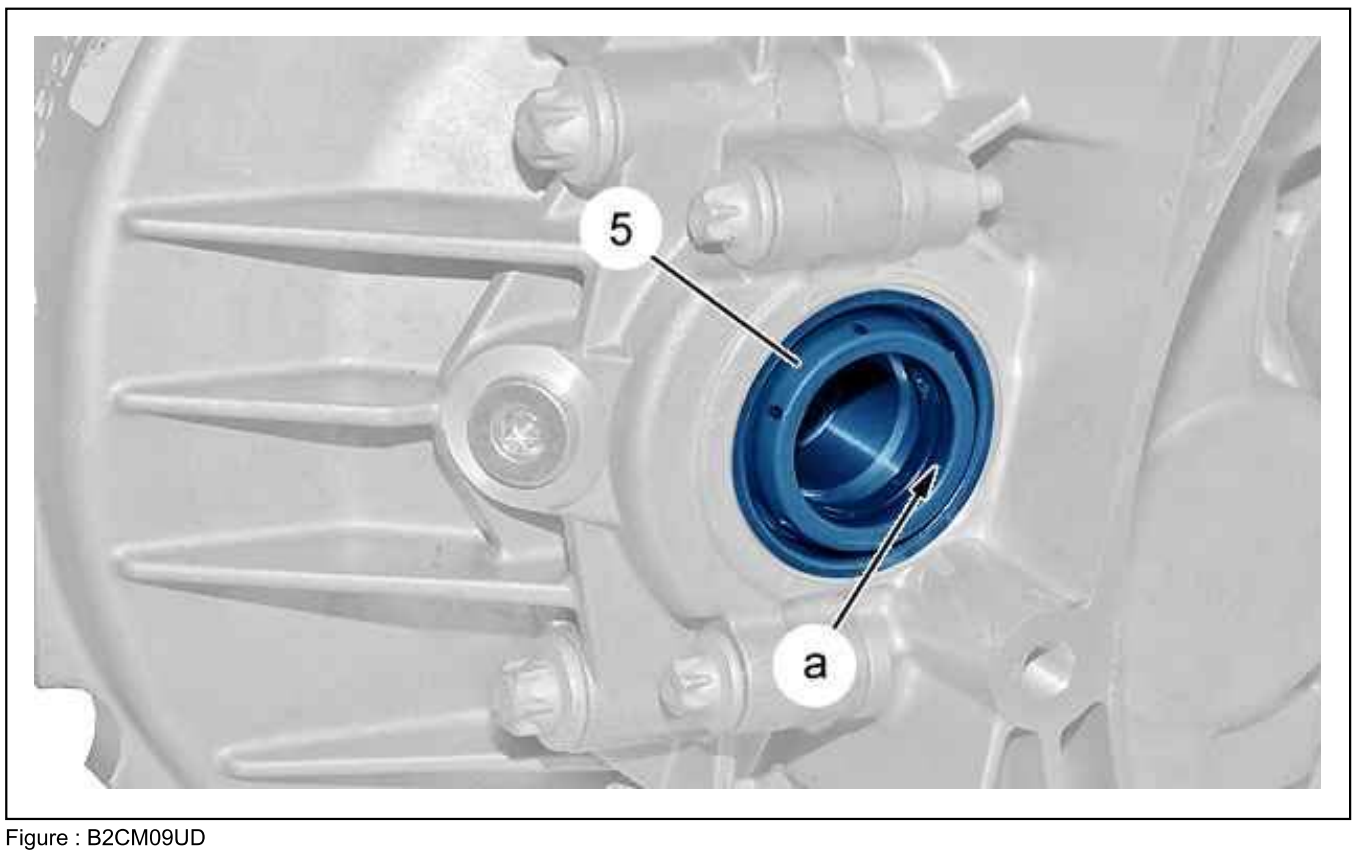

Figure : B2CM09UD

CAUTION : Take care not to distort the mating surface.

Remove : The right-hand driveshaft seal (5) ; By means of a screwdriver (as "a").

3. Refitting

CAUTION : Clean the gasket faces with an approved descaling product. Do not use abrasives or sharp tools on the joint faces. The seal faces should no show any traces of impacts or scratches.

CAUTION : Replace : The drive shaft seals.

3.1. On the left-hand side

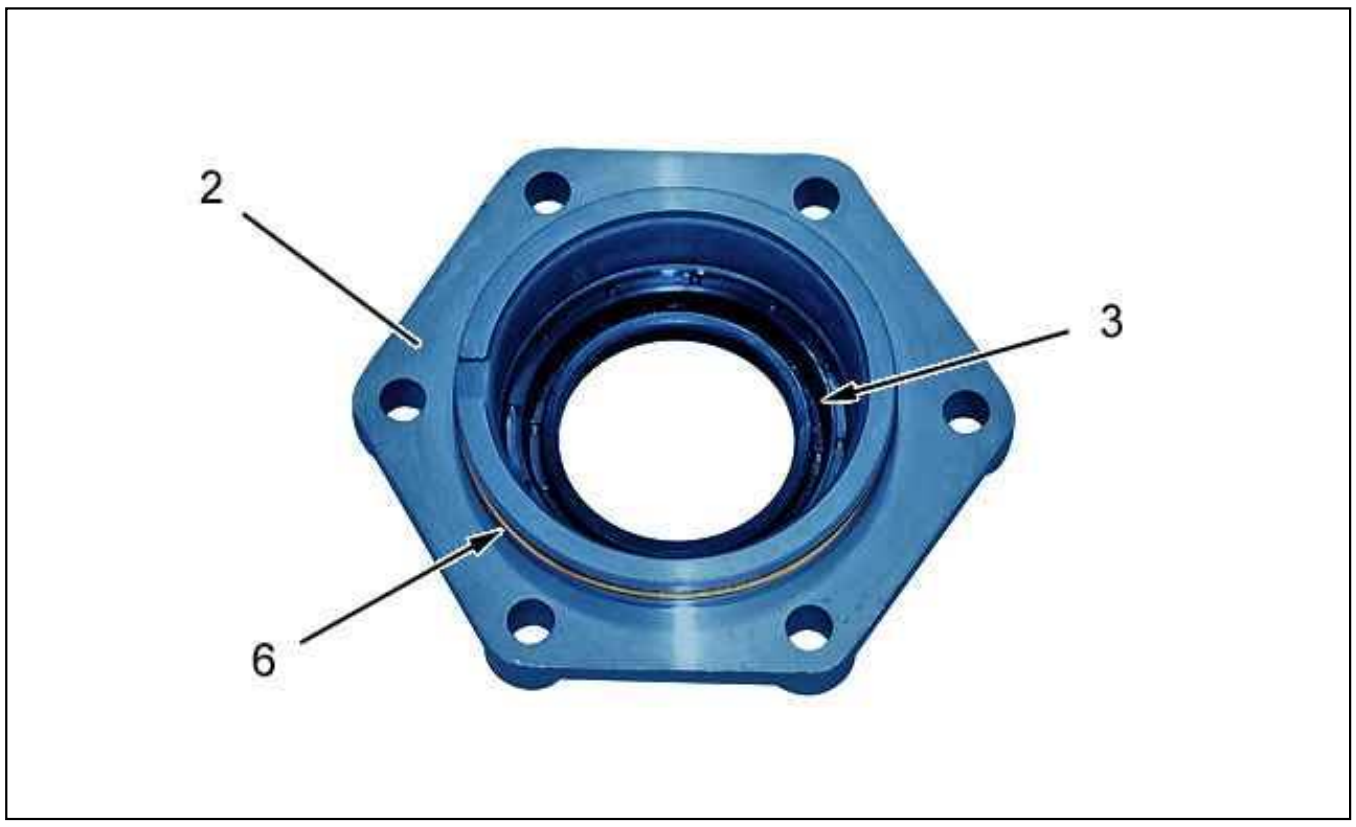

Figure : B2CM09VD

Coat the interval between the lips of the driveshaft seal with grease (Left hand) (3).
Fit : The left-hand driveshaft seal (3) ; Using tool [2].
Refit :

- The differential bearing lock plate (2)
- The bolts (1) ; Tighten to 3 ± 0,3 daN.m

3.2. On the right-hand side

Coat the interval between the lips of the driveshaft seal with grease (Right) (6).
Fit : The right-hand driveshaft seal (6) ; Using tool [1].

3.3. Final operations

Refit :

- The turbo air outlet pipe (4) ; Tighten to 1,6 ± 0,1 daN.m
- The drive shafts

Fill gearbox with oil and ensure correct level .

DISMANTLING : MANUAL GEARBOX

ESSENTIAL : Observe the safety and cleanliness recommendations .

1. Recommended tools

Presentation : Recommended tools .

2. Removing : Gearbox ratio selection mechanism

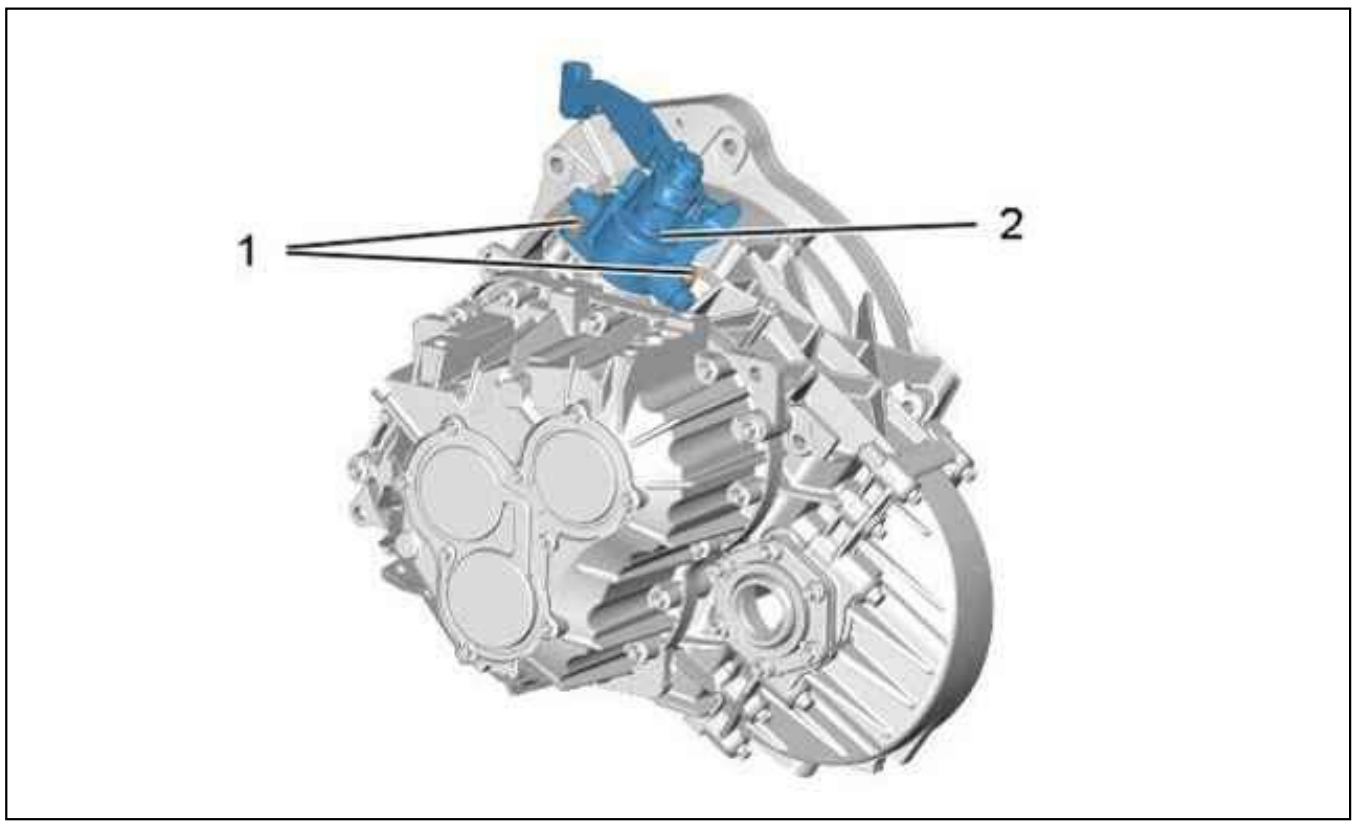

Figure : B2CM0FSD

CAUTION : Check that the gear selection mechanism (2) is in the neutral position.

Remove :

- The bolts (1)
- The gear selection mechanism (2)

3. Removing : gearbox casing

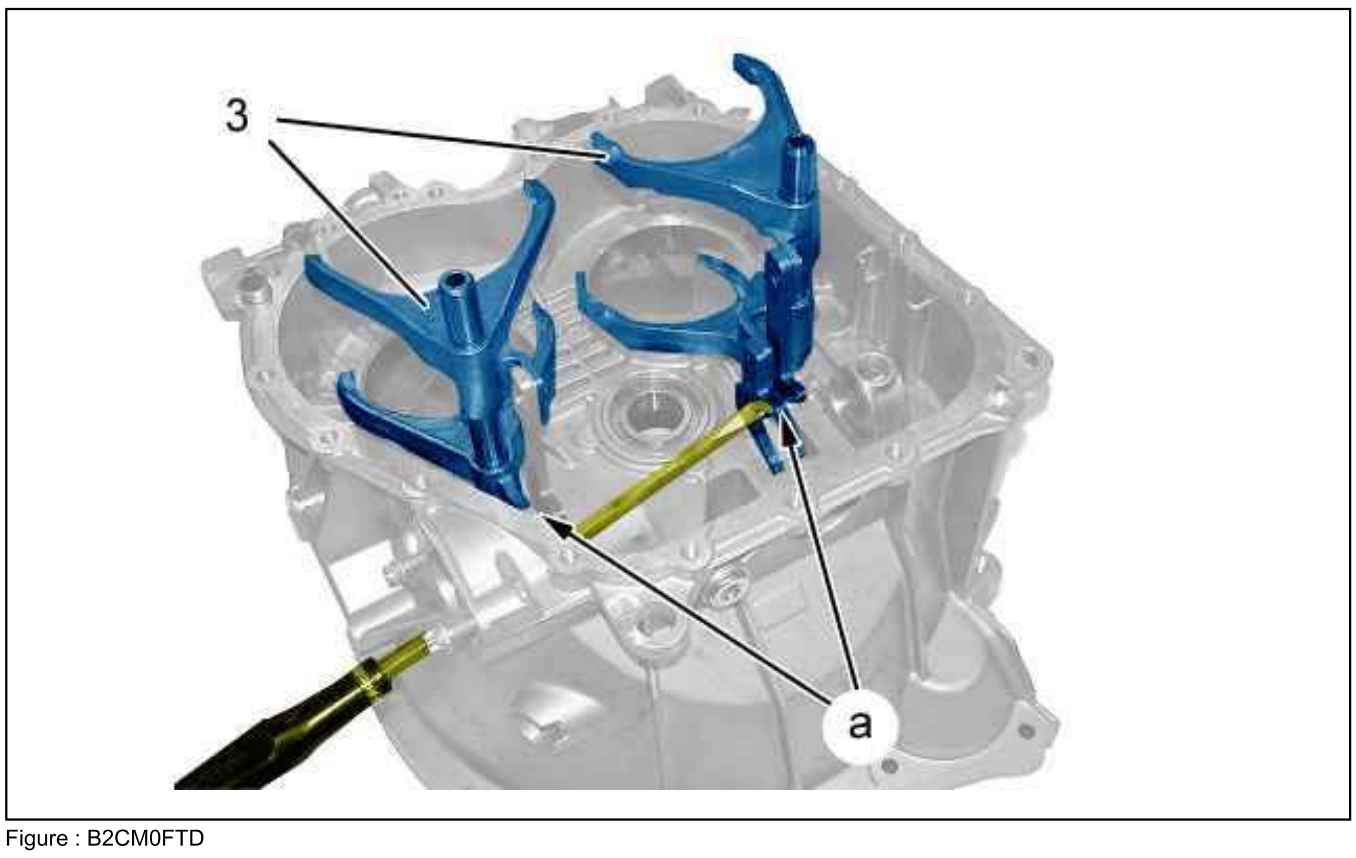

Figure : B2CM0FTD

CAUTION : The simultaneous engagement of two gears locks the input shaft, this operation is essential in order to be able to release the gearbox shafts tightening bolts.

Act on the selection forks (3) to engage 2 gears ; By means of a screwdriver (as "a").

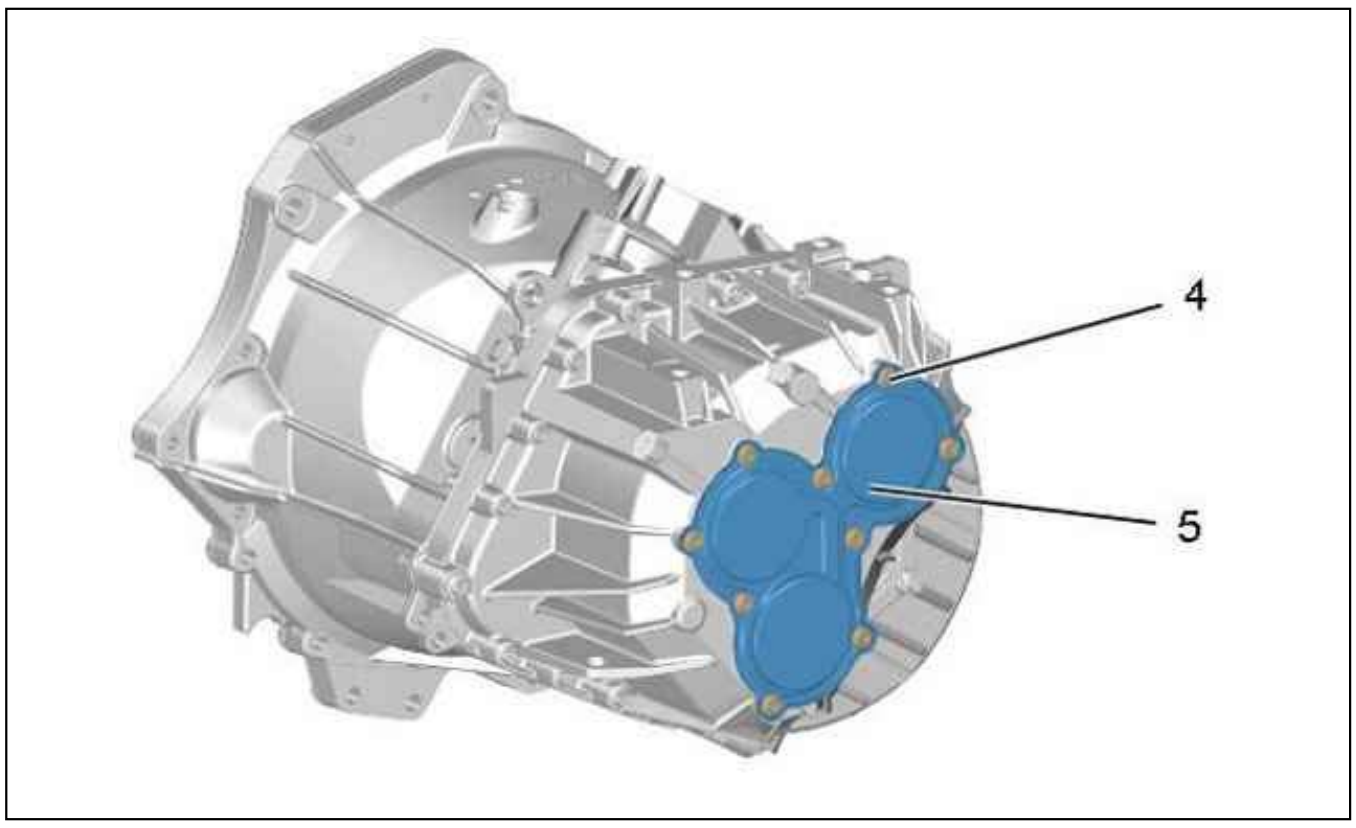

Figure : B2CM0FUD

Remove :

- The bolts ((4)
- The gearbox casing (5)

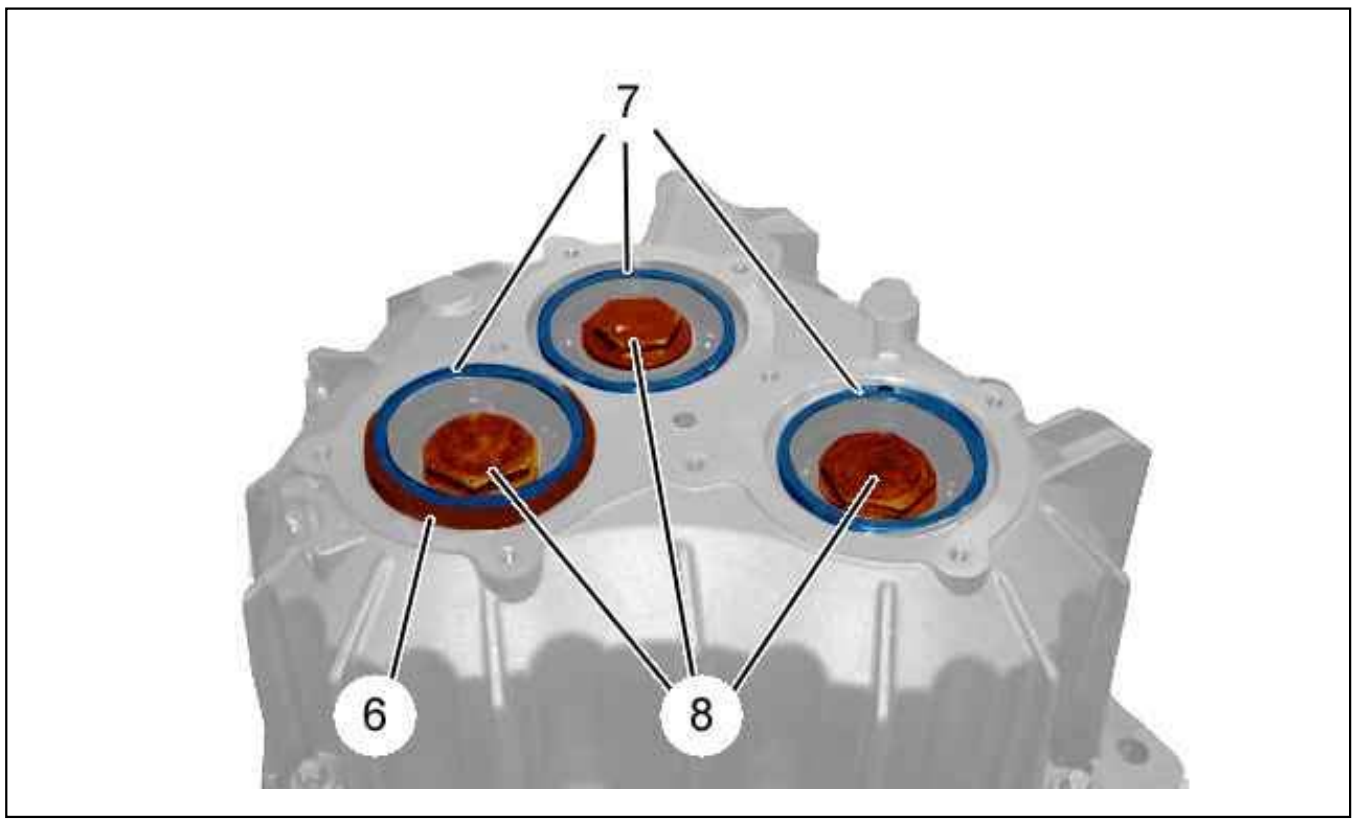

Figure : B2CM0FVD

Remove :

- The adjusting shim (6)
- The circlips (7) ; Using circlip pliers
- The bolts (8)



Figure : B2CM0FWD

Remove the bolts (9).

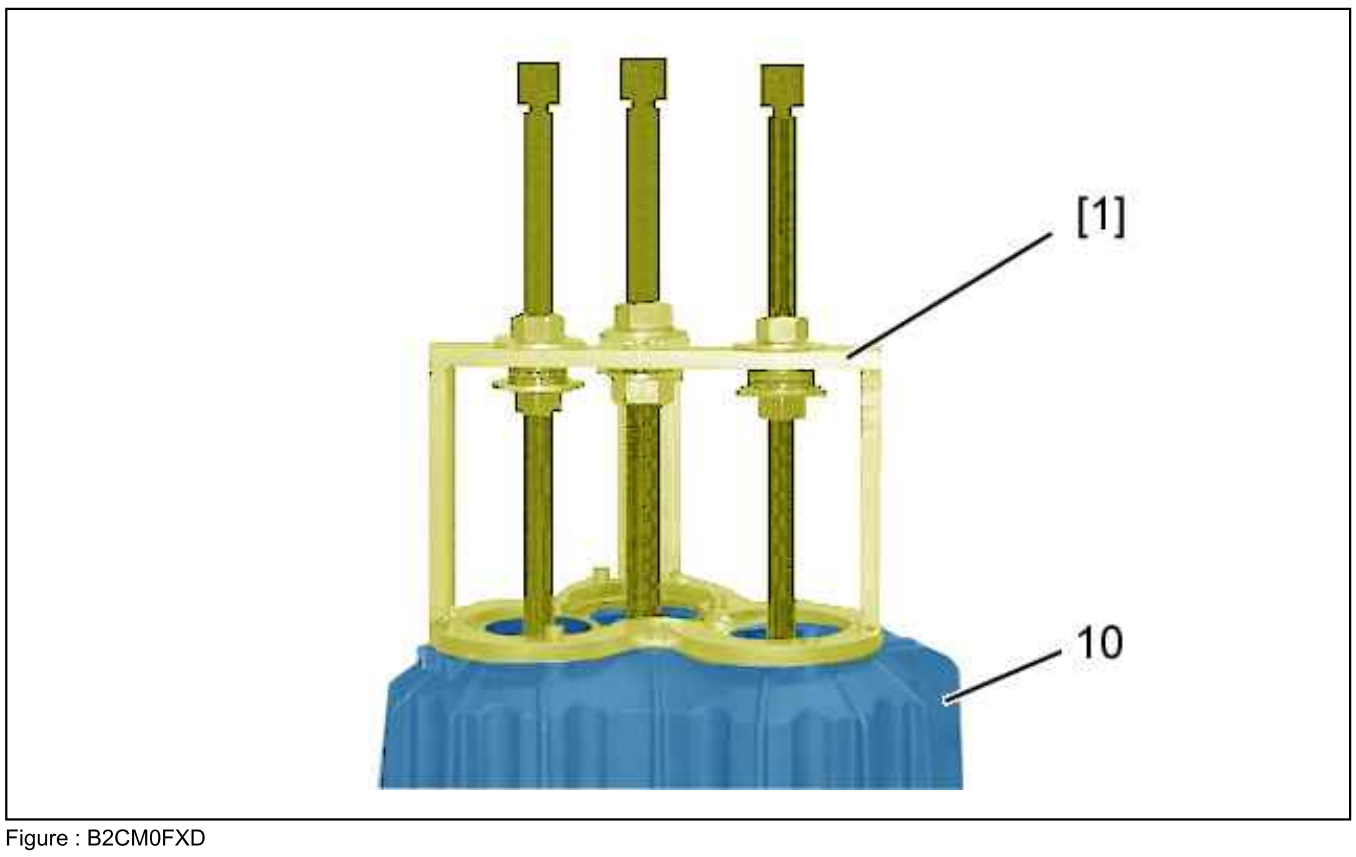

Figure : B2CM0FXD

Fit the tool [1].
Remove : The gearbox casing (10) ; Using tool [1].

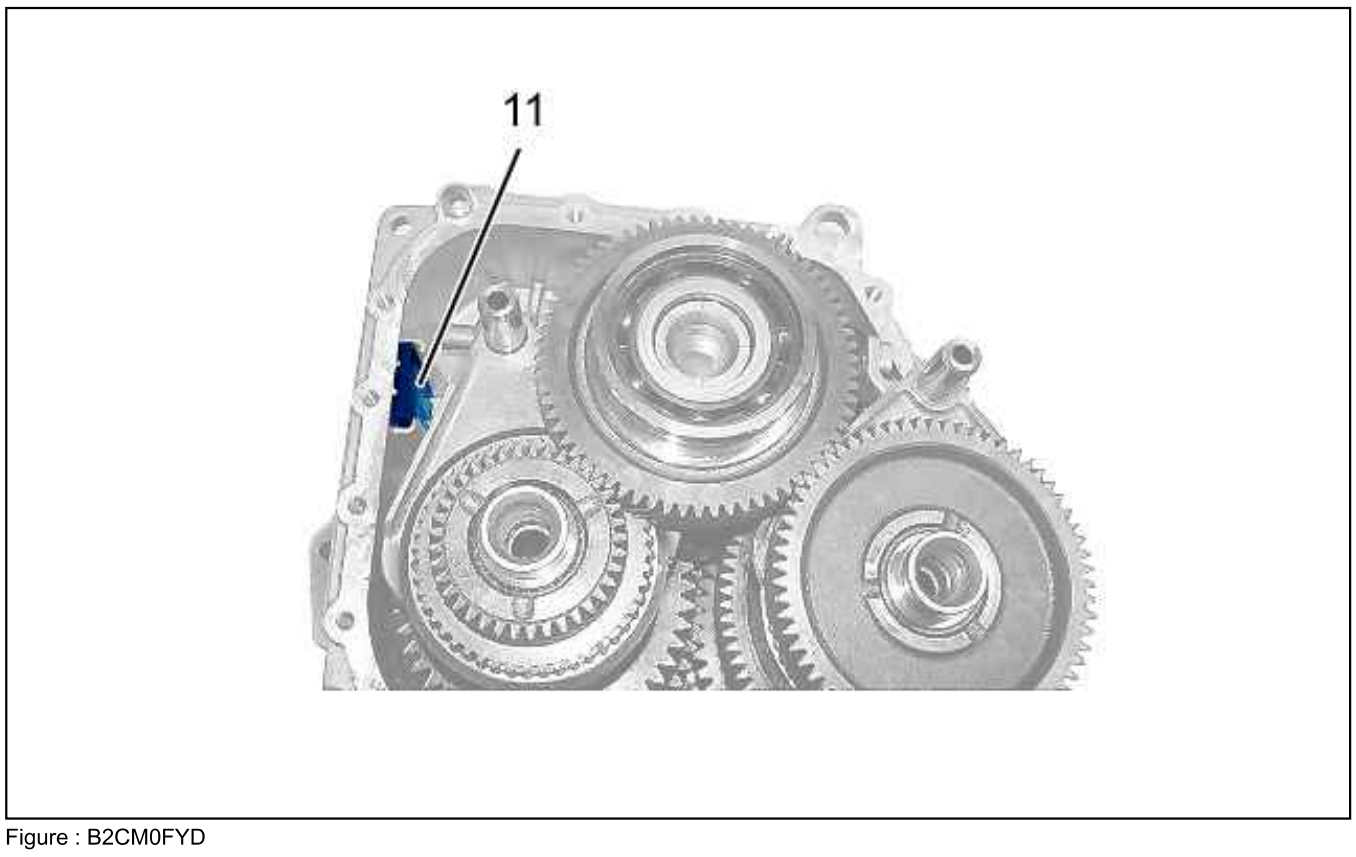

Figure : B2CM0FYD

Remove : The magnet (11).

4. Removing: Primary and secondary shafts

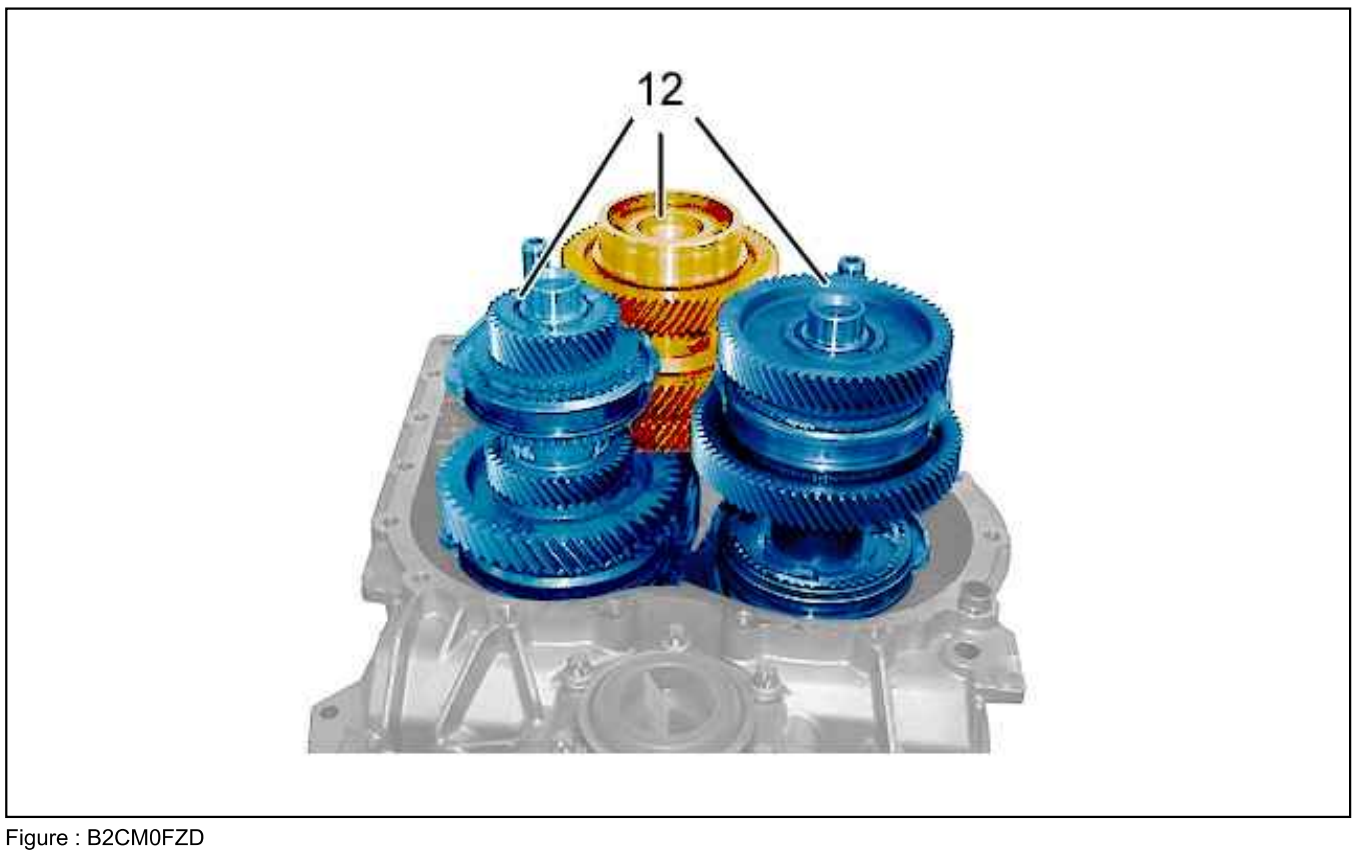

Figure : B2CM0FZD

CAUTION : Observe the following order of removal : Upper output shaft - input shaft - Lower output shaft.

Remove the input shaft, output shafts and forks assembly (12).

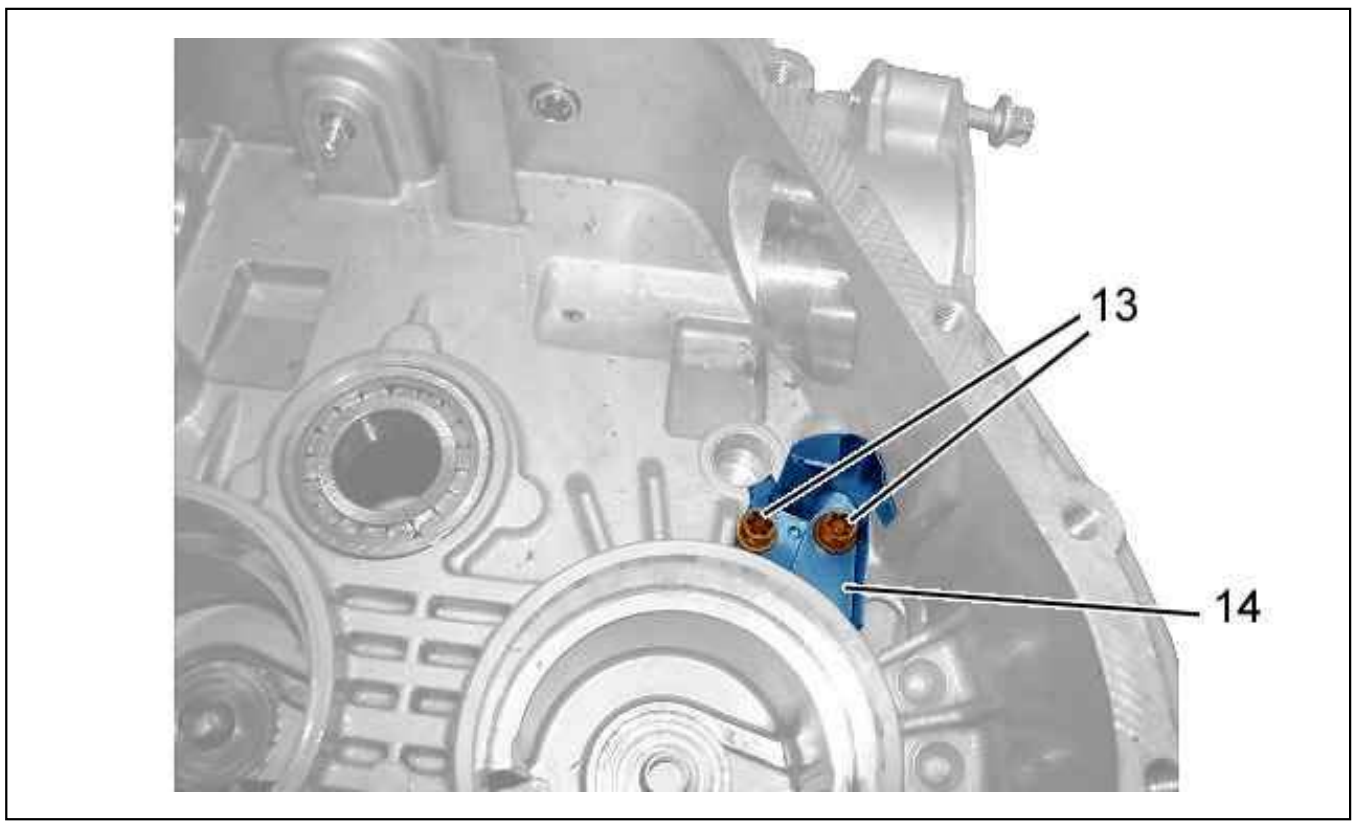

Figure : B2CM0G0D

Remove the bolts (13).

Remove the oil deflector (14).

5. Removing : Differential housing

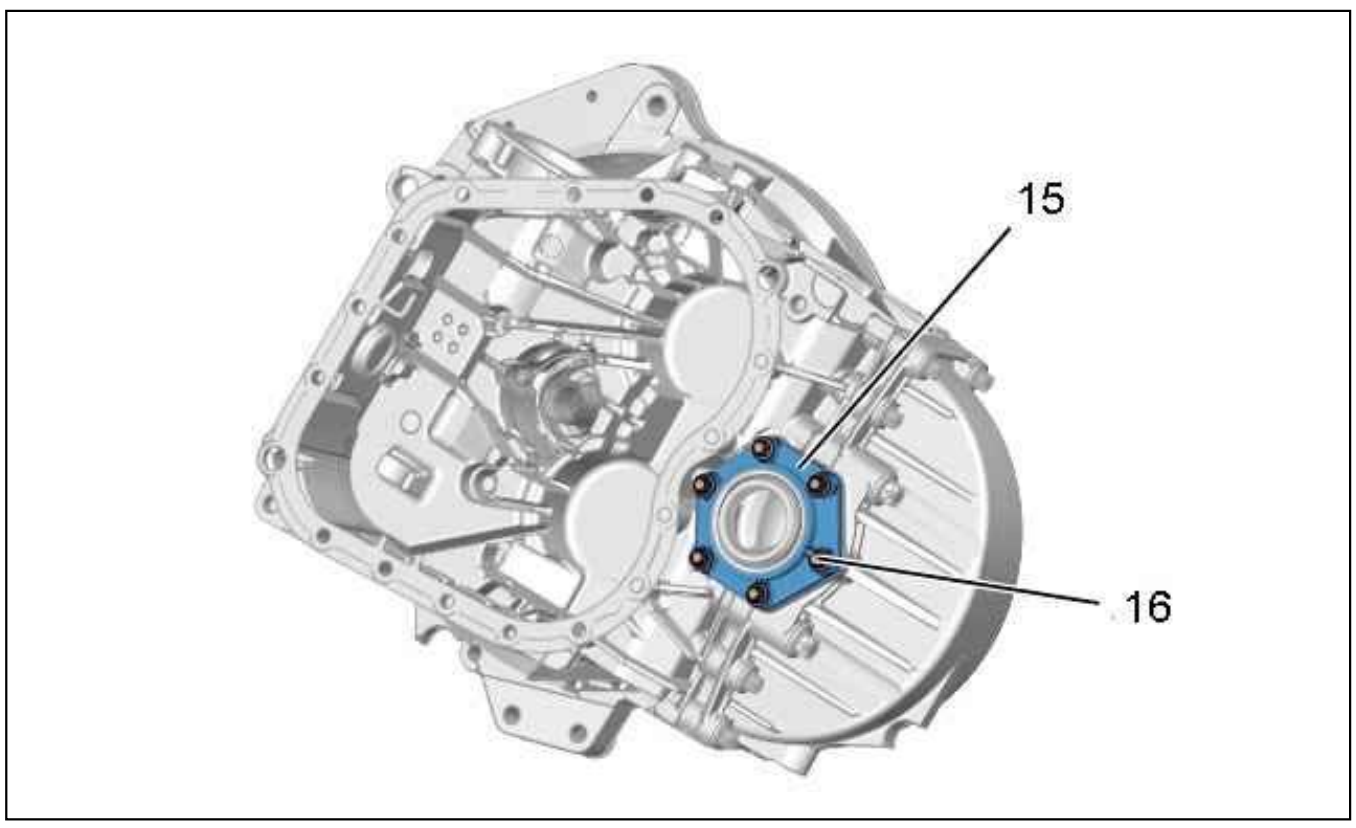

Figure : B2CM0G1D

Remove :

- The bolts (16)
- The bearing thrust plate (15)
- The adjusting shim

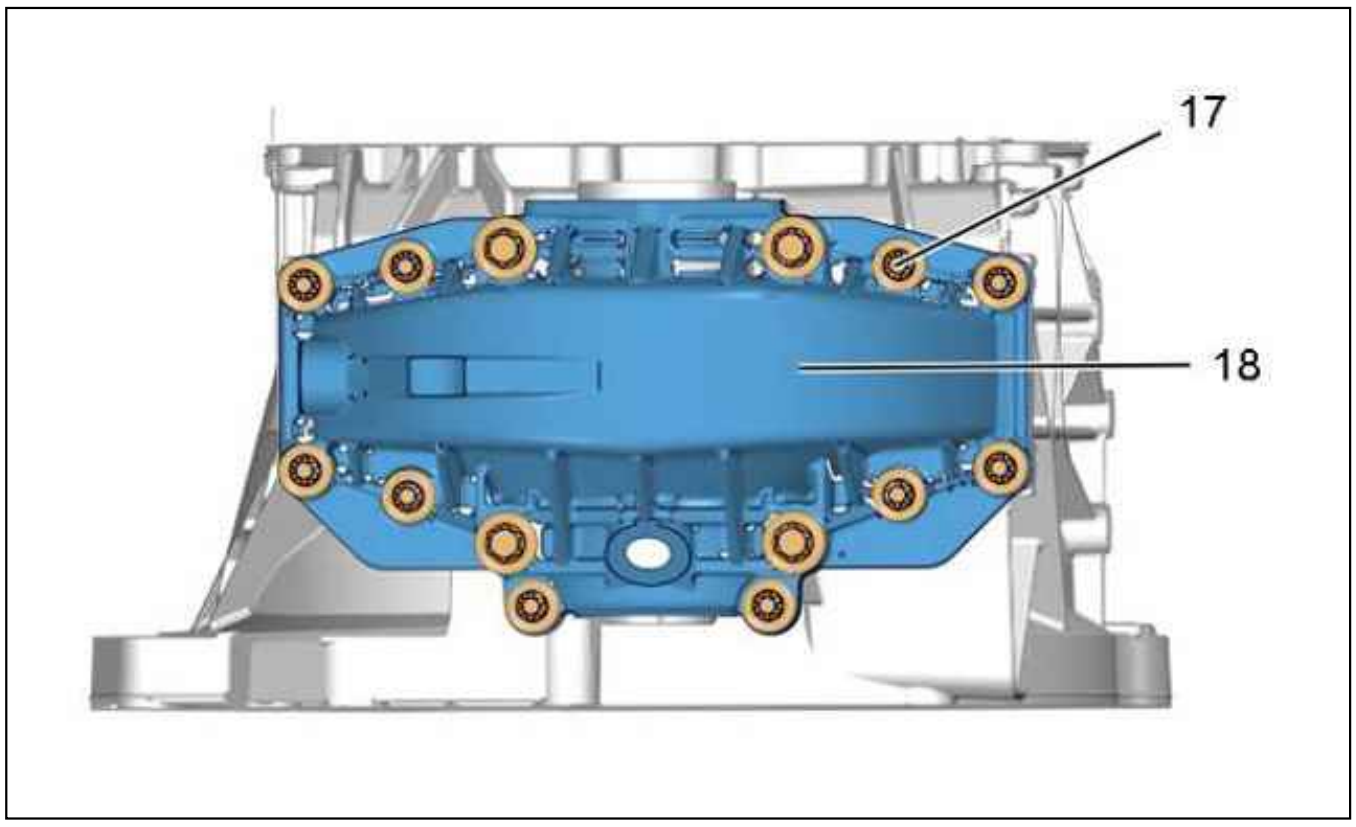

Figure : B2CM0G2D

Remove :

- The bolts (17)
- The differential housing (18)

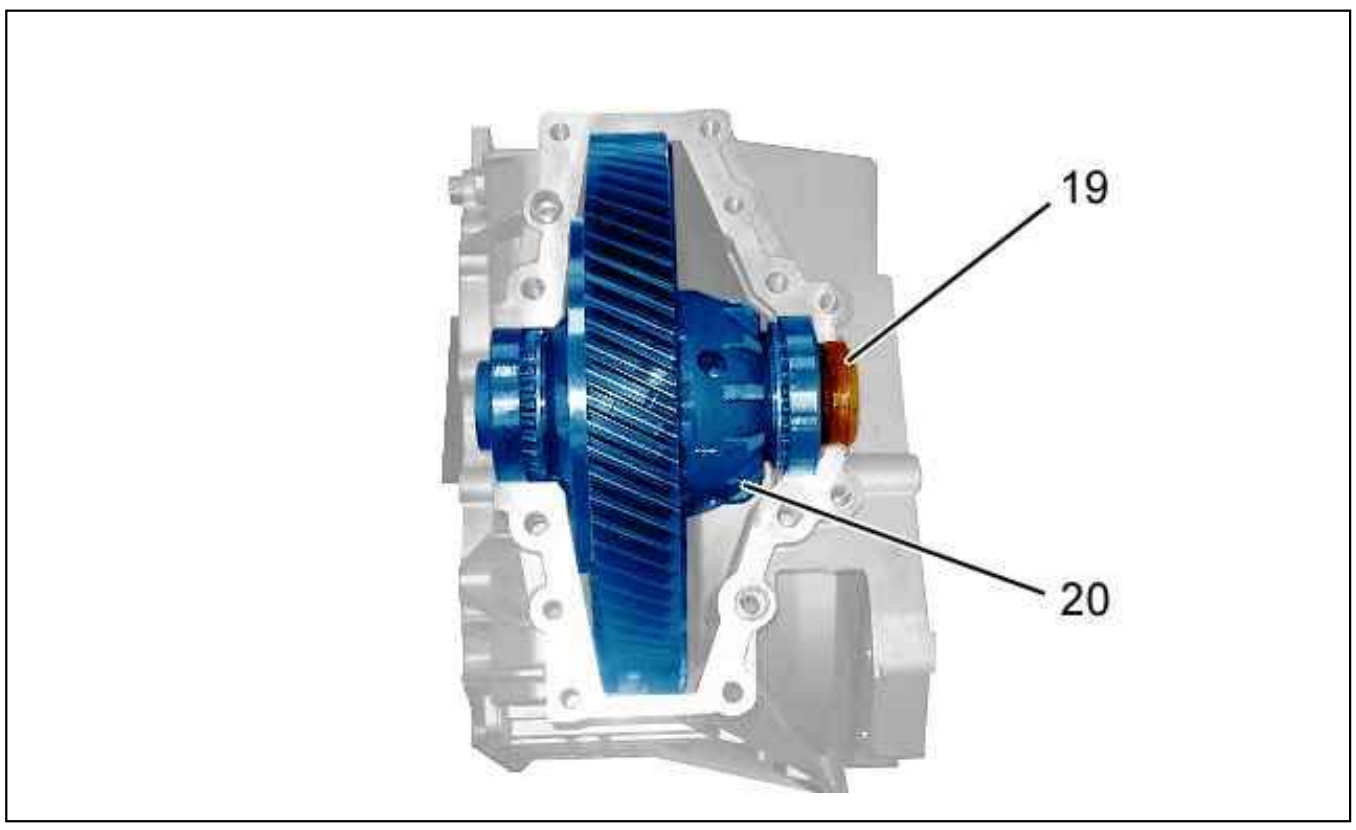

Figure : B2CM0G3D

Remove :

- The sealing ring (19)
- The differential housing (20) fitted with its bearings

STRIPPING - RE-ASSEMBLING : COMPONENTS INTERNAL TO THE GEARBOX

ESSENTIAL : Observe the safety and cleanliness recommendations .

CAUTION : Observe the cleaning and refitting conditions : gearbox.

CAUTION : Identify the direction of fitting of the bearings, gears and synchronizers before removal. Mark them (if necessary).

1. Recommended tools

Presentation : Recommended tools .

2. input shaft

2.1. Stripping

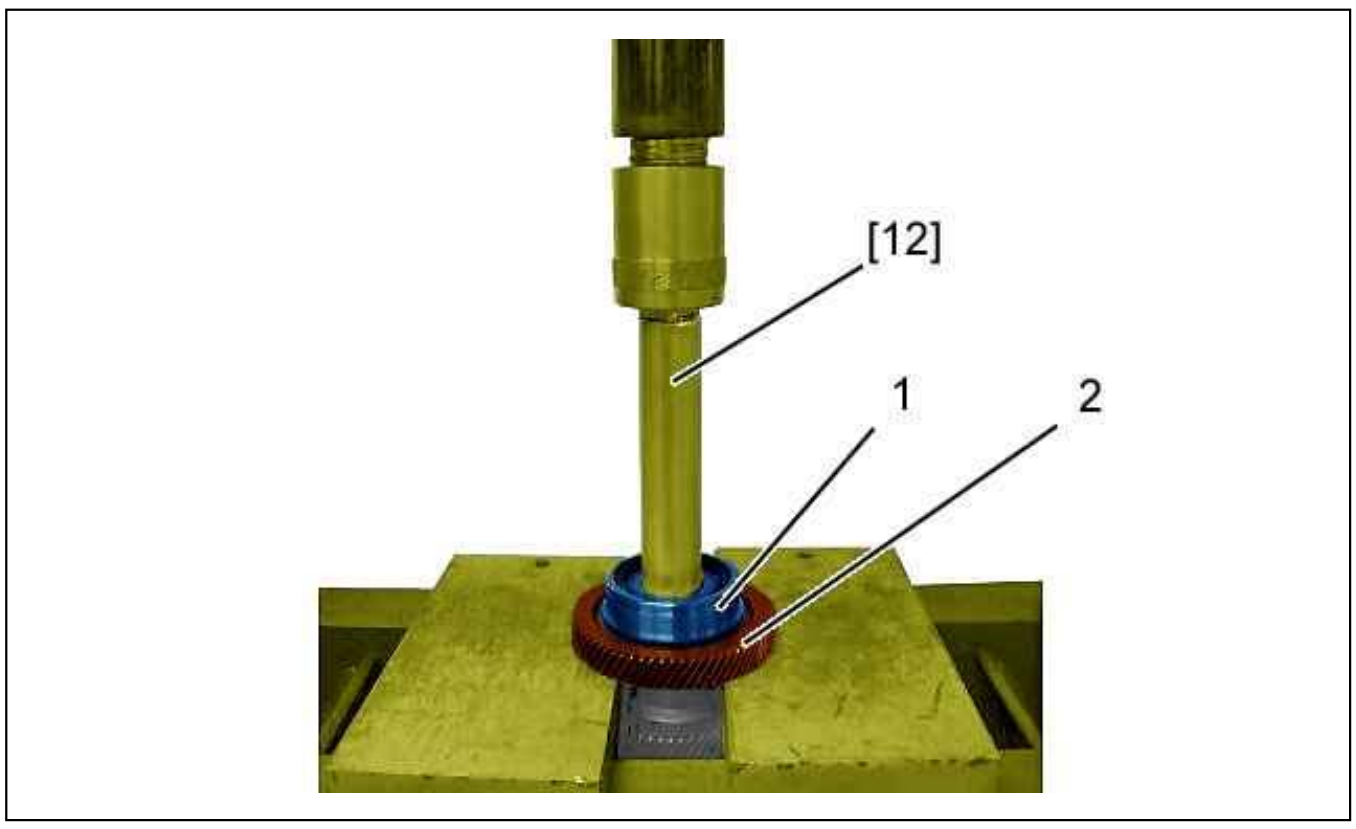

Figure : B2CM0JCD

Remove :

- The bearing (1)
- The 4th/6th gear pinion (2) ; Using tool [12] and press

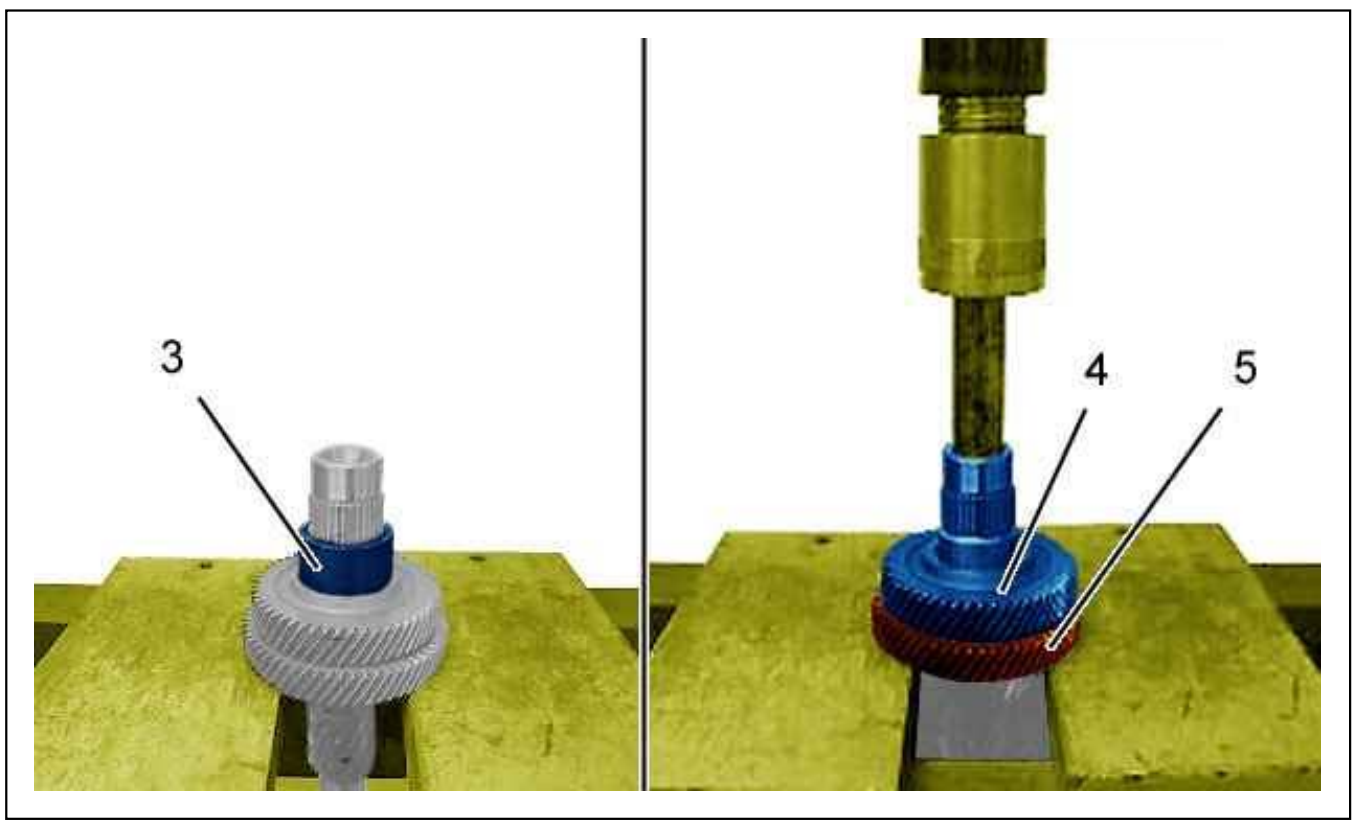

Figure : B2CM0JDD

Remove :

- The spacer (3)
- The 3rd speed gear (4) ; Using a press
- 5th speed gear (5) ; Using a press

2.2. Re-assembling

CAUTION : Oil the pinion gears and the synchronizer rings with transmission oil.

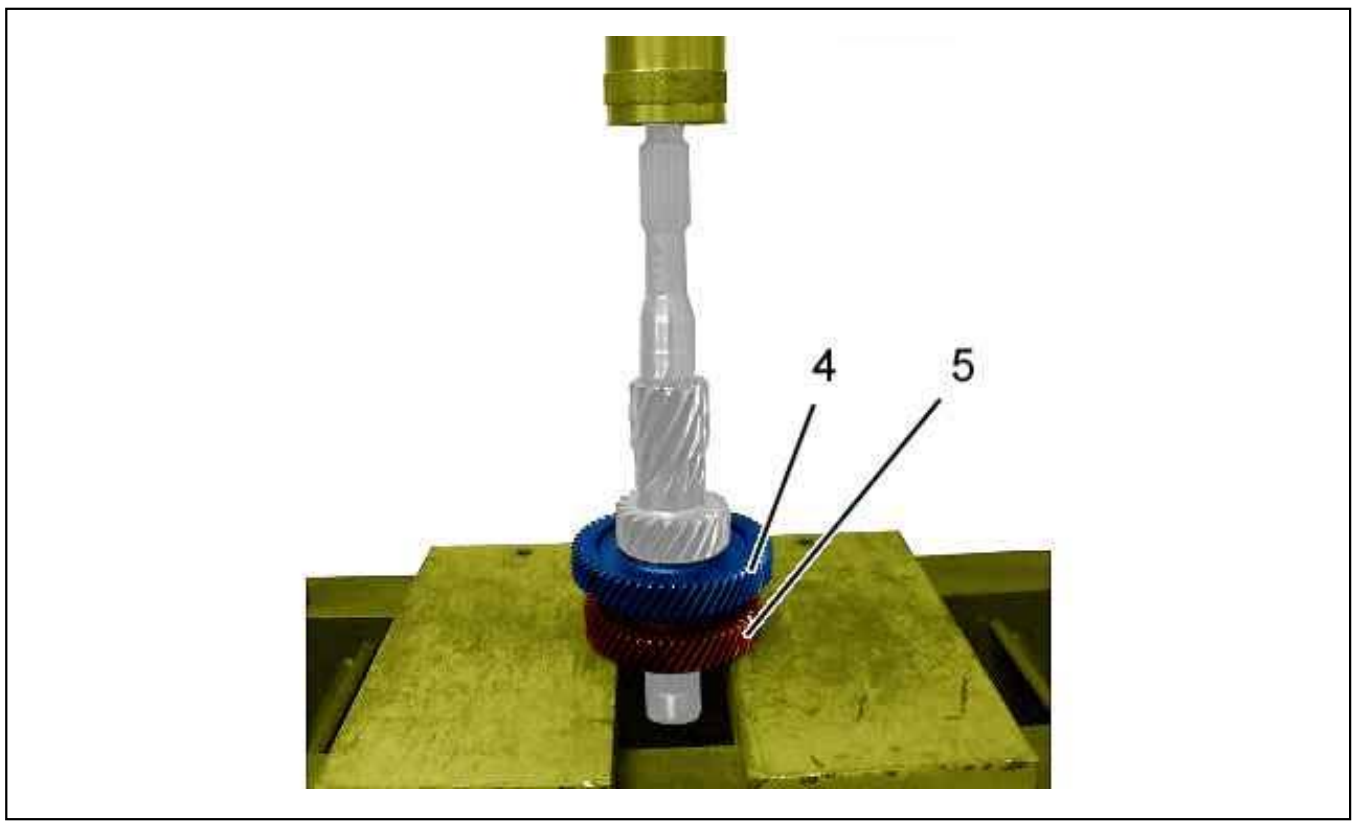

Figure : B2CM0JED

Refit :

- 5th speed gear (4) ; Using a press
- The 3rd speed gear (5) ; Using a press

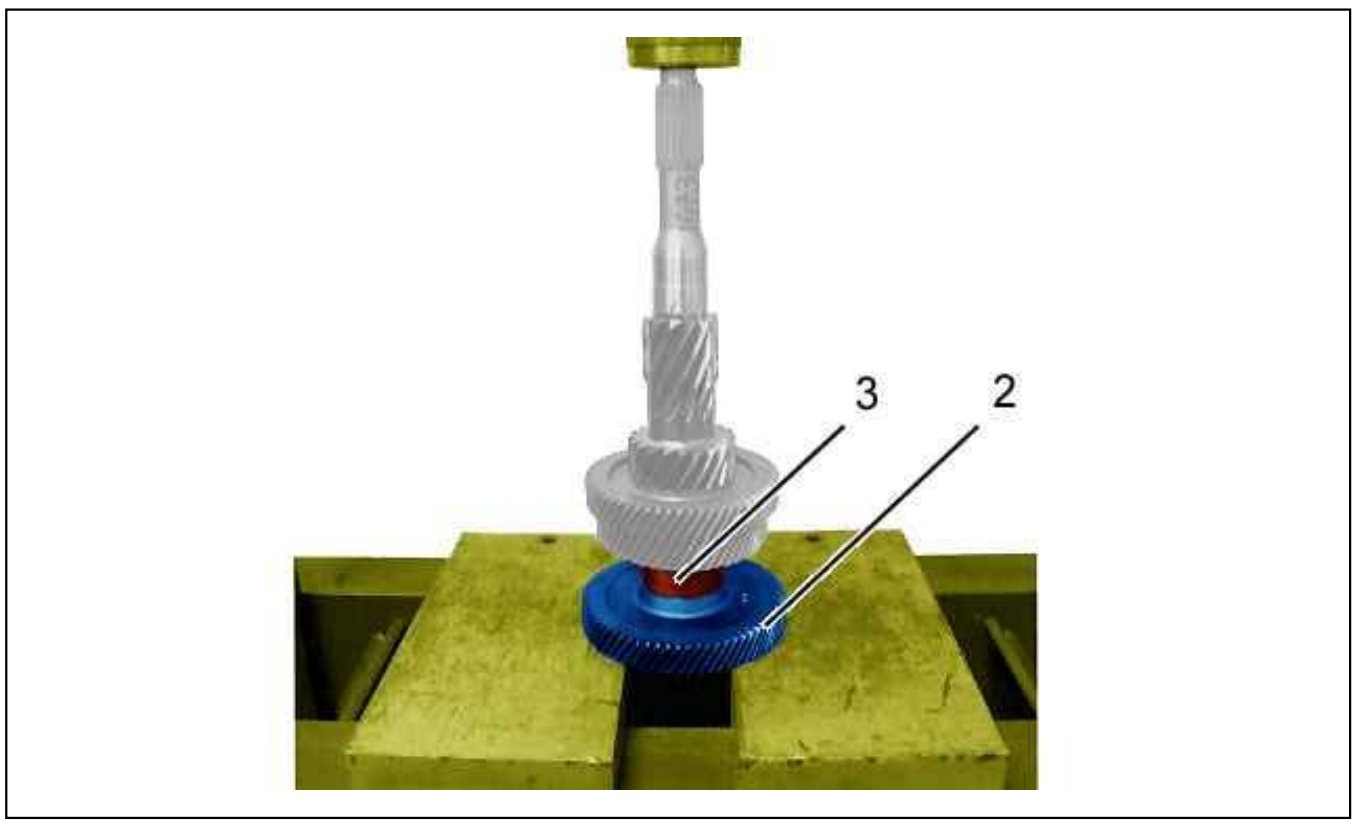

Figure : B2CM0JFD

Refit :

- The spacer (3)
- The 4th/6th gear pinion (2) ; Using a press

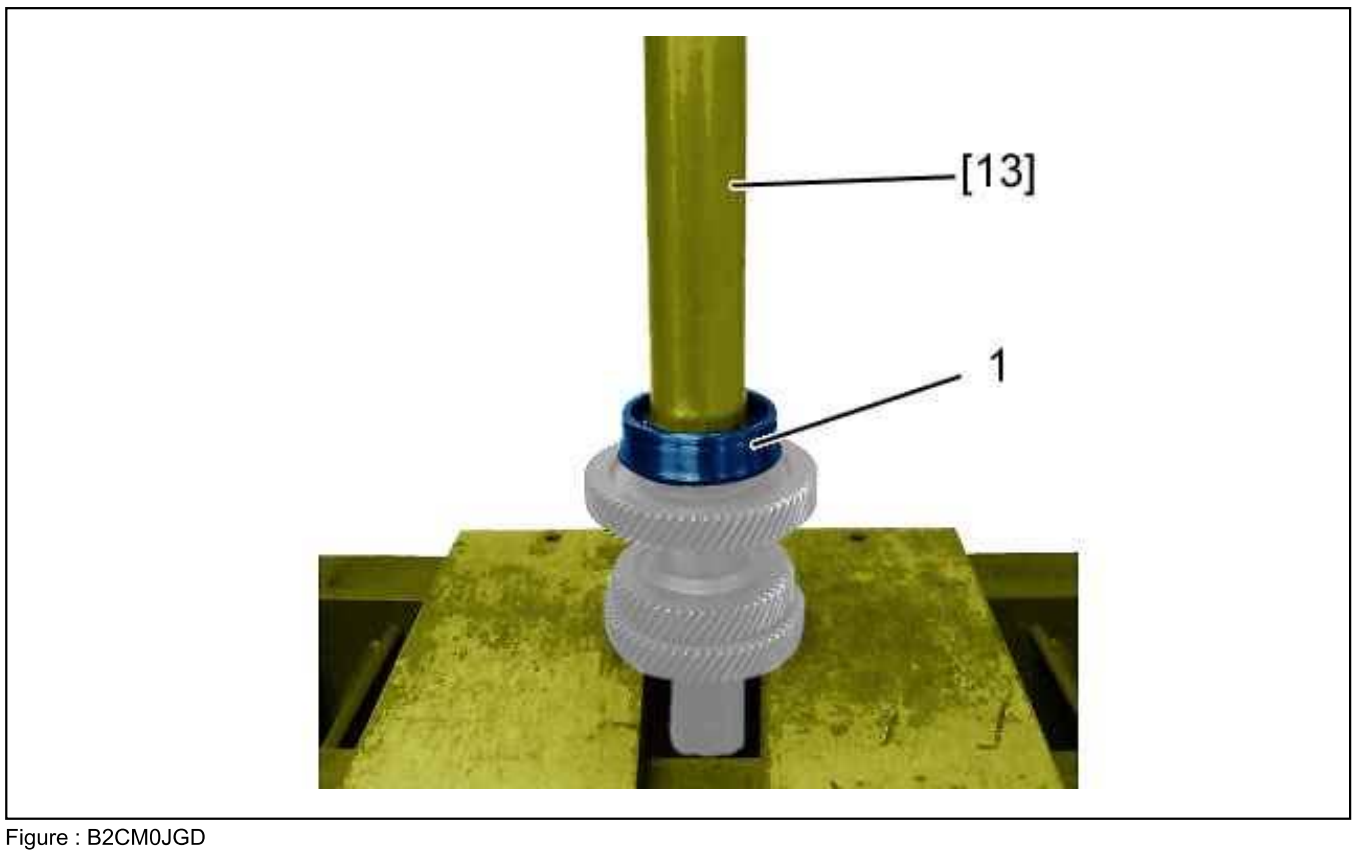

Figure : B2CM0JGD

Fit the bearing (1) ; Using tool [13] and press .

3. Upper output shaft

3.1. Stripping

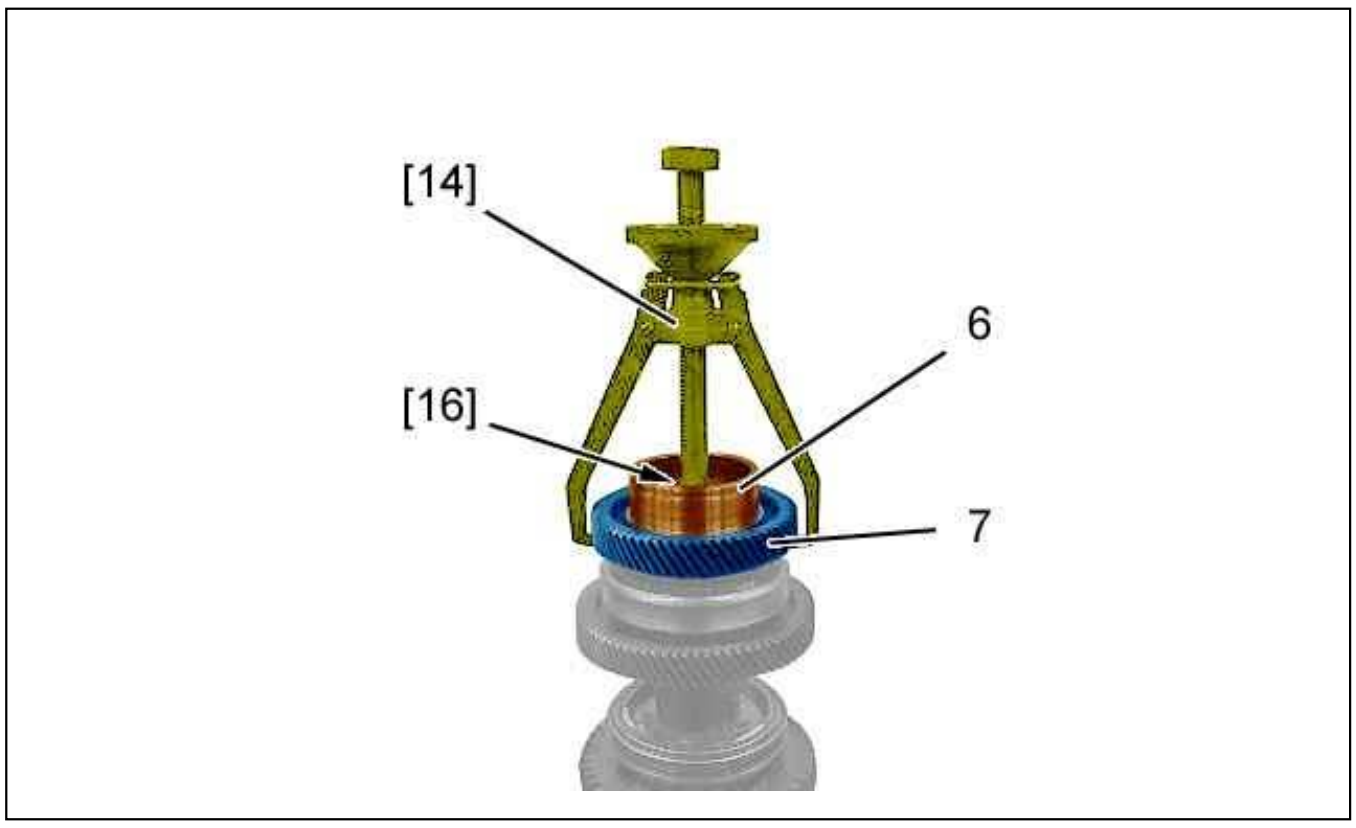

Figure : B2CM0JHD

Position the tools [14], [16].
Remove :

- The top secondary shaft bearing (6)
- The 4th speed gear (7) ; Using the tools [14], [16]

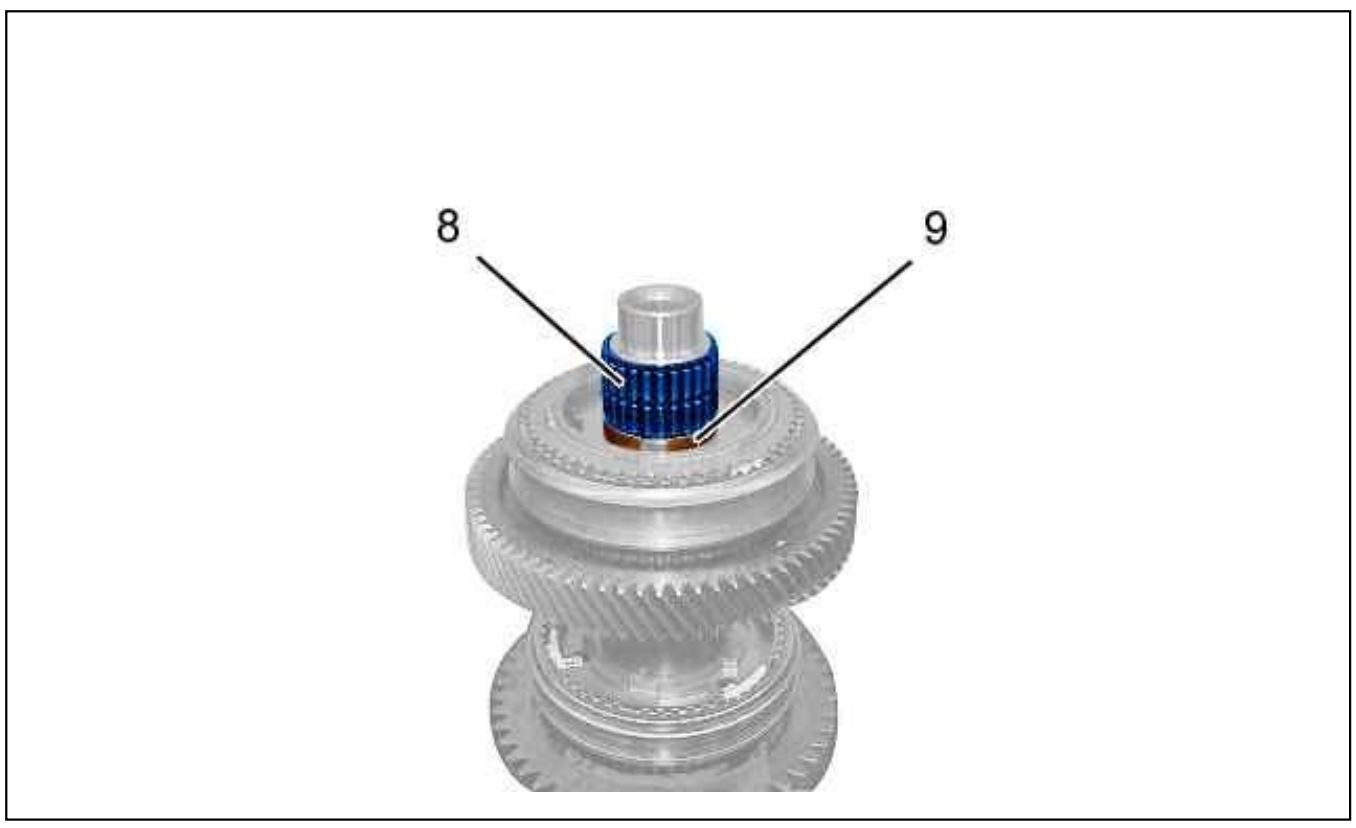

Figure : B2CM0JJD

Remove :

- The bearing (8)
- The circlip (9) ; Using tool [10]

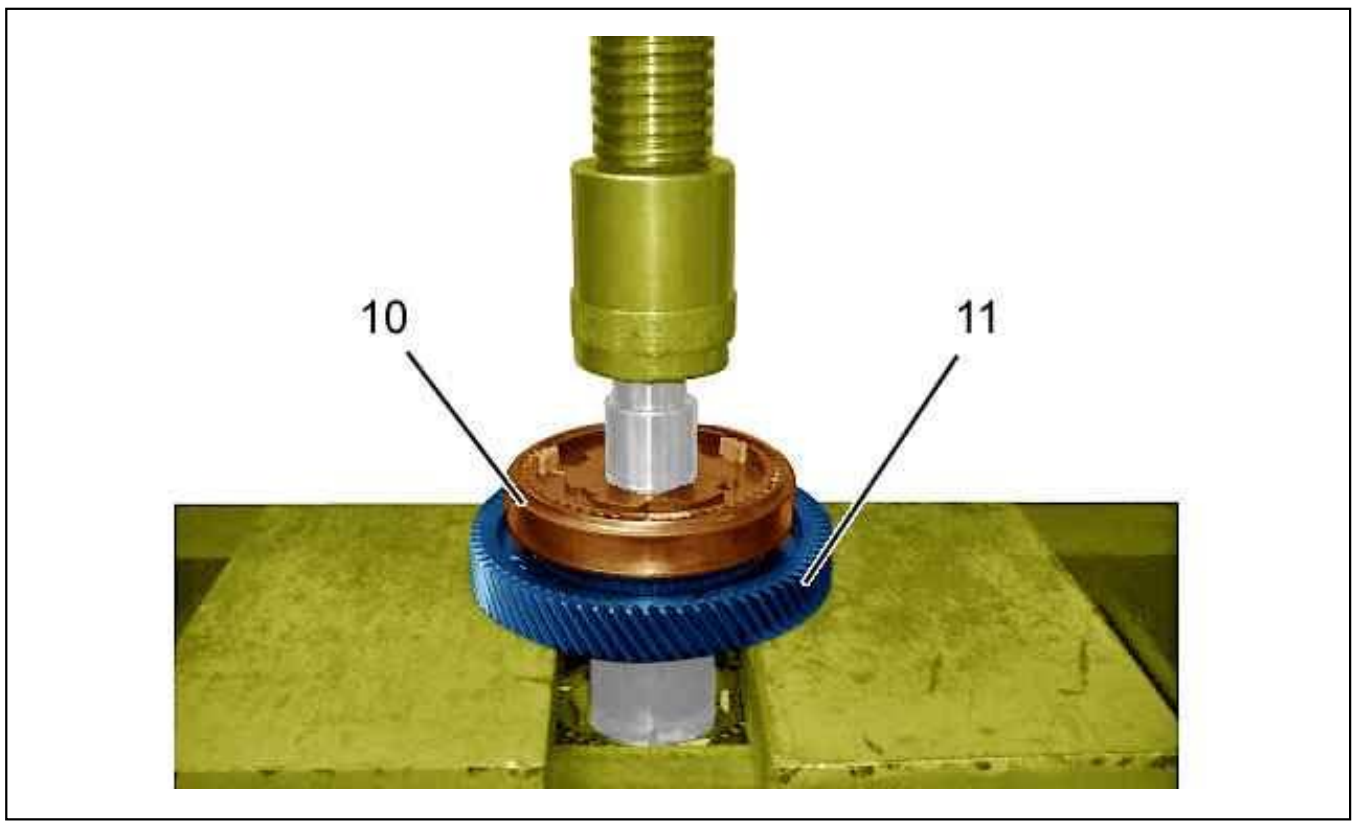

Figure : B2CM0JLD

CAUTION : Keep the synchroniser (10) well centred on its hub.

Remove :

- The 3rd/4th synchronizer ring (10)
- The 3rd speed gear (11) (Pinion complete with its bearing) ; Using a press

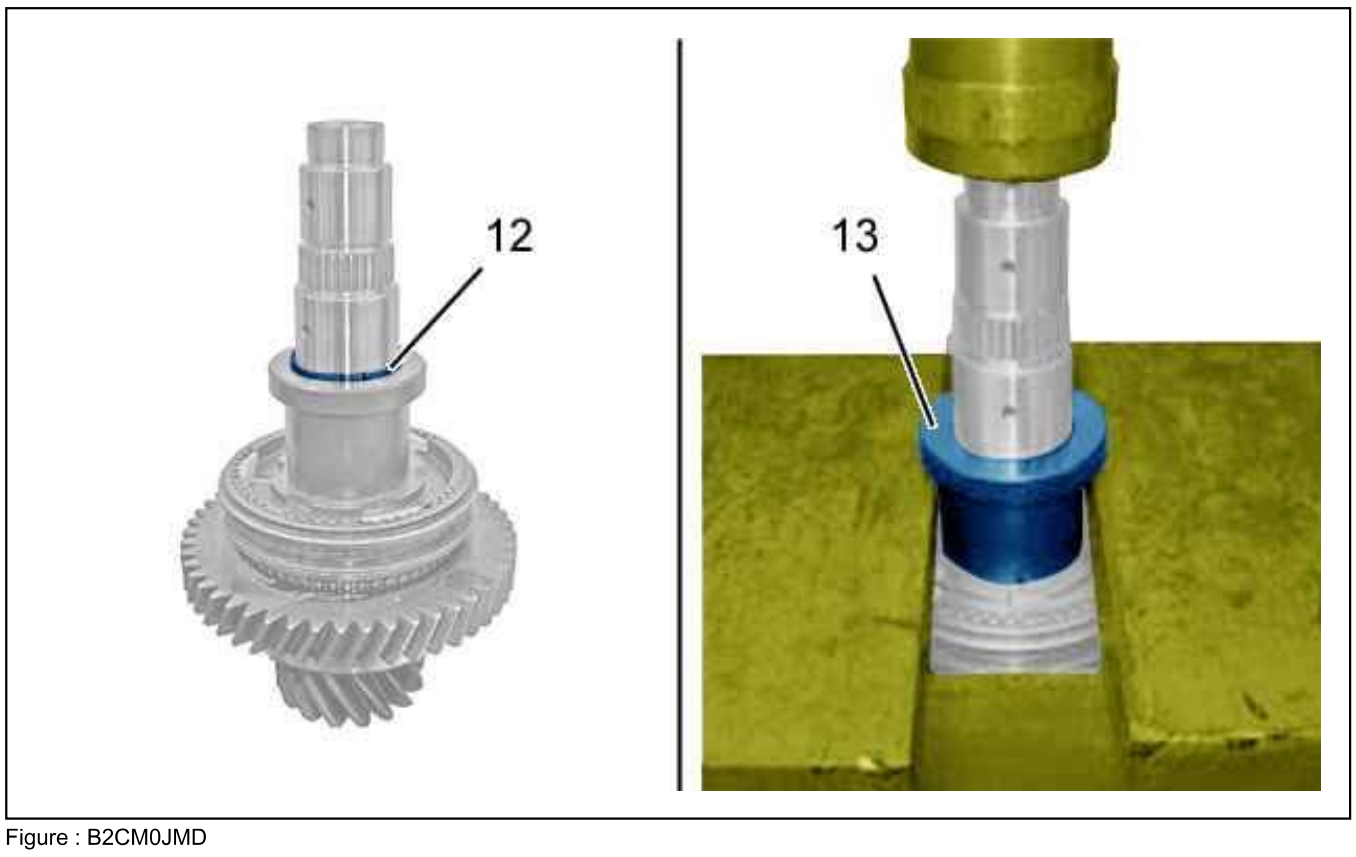

Figure : B2CM0JMD

Remove :

- The circlip (12)
- The spacer (13) ; Using a press

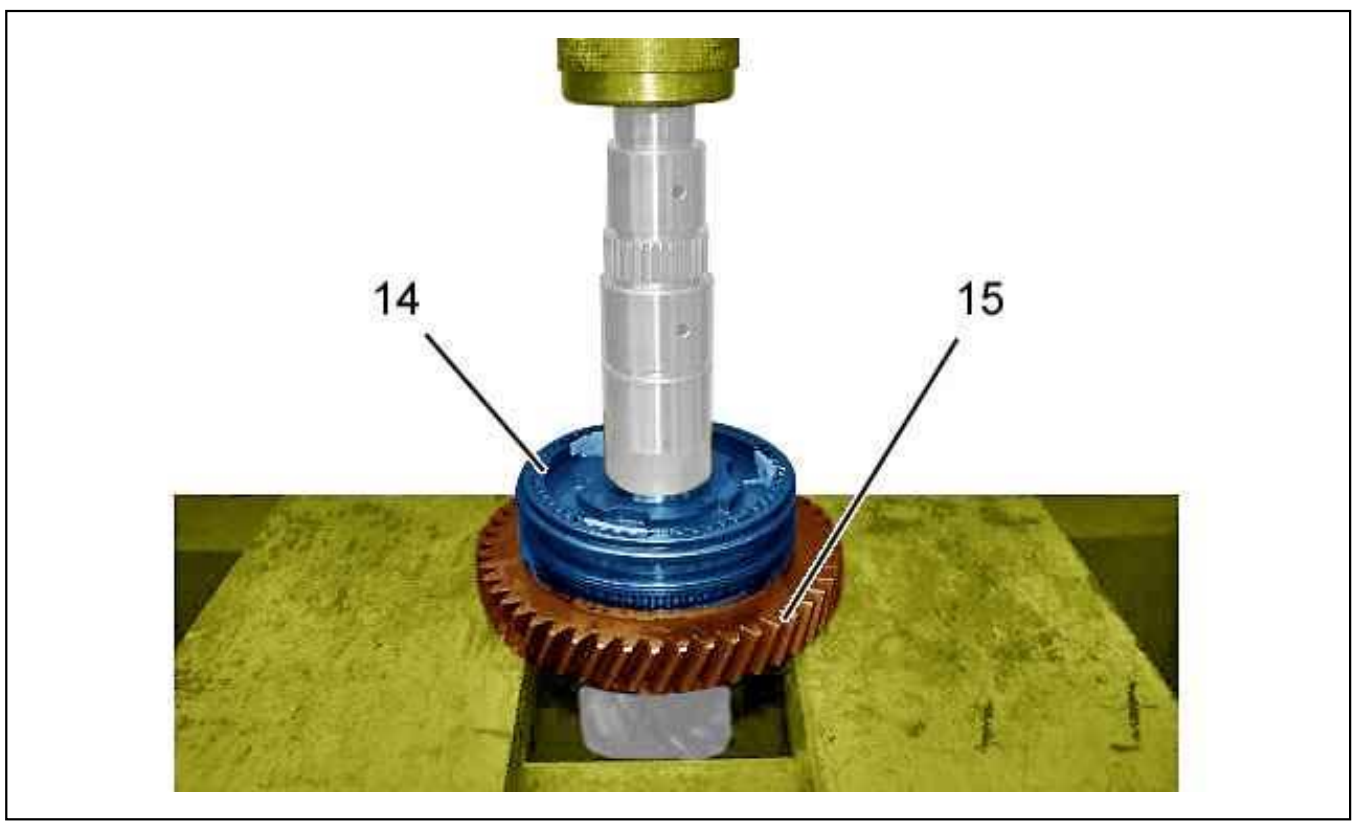

Figure : B2CM0JND

CAUTION : Keep the synchroniser (14) well centred on its hub.

Remove :

- Reverse gear synchronizer (14)
- Reverse gear pinion (15) together with its bearing ; Using a press

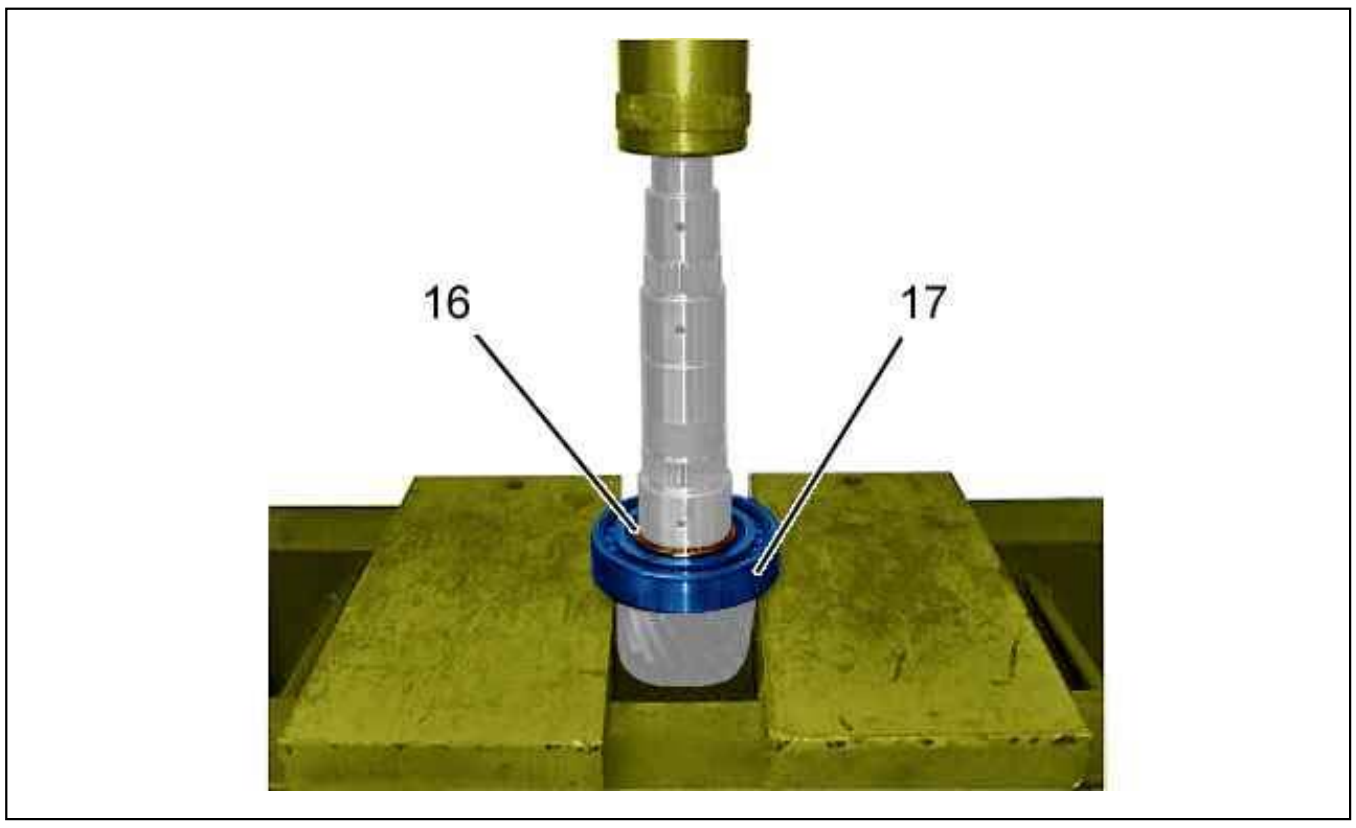

Figure : B2CM0JPD

Remove :

- The circlip (16)
- The bearing (17) ; Using a press

3.2. Re-assembling

CAUTION : Oil the pinion gears and the synchronizer rings with transmission oil.

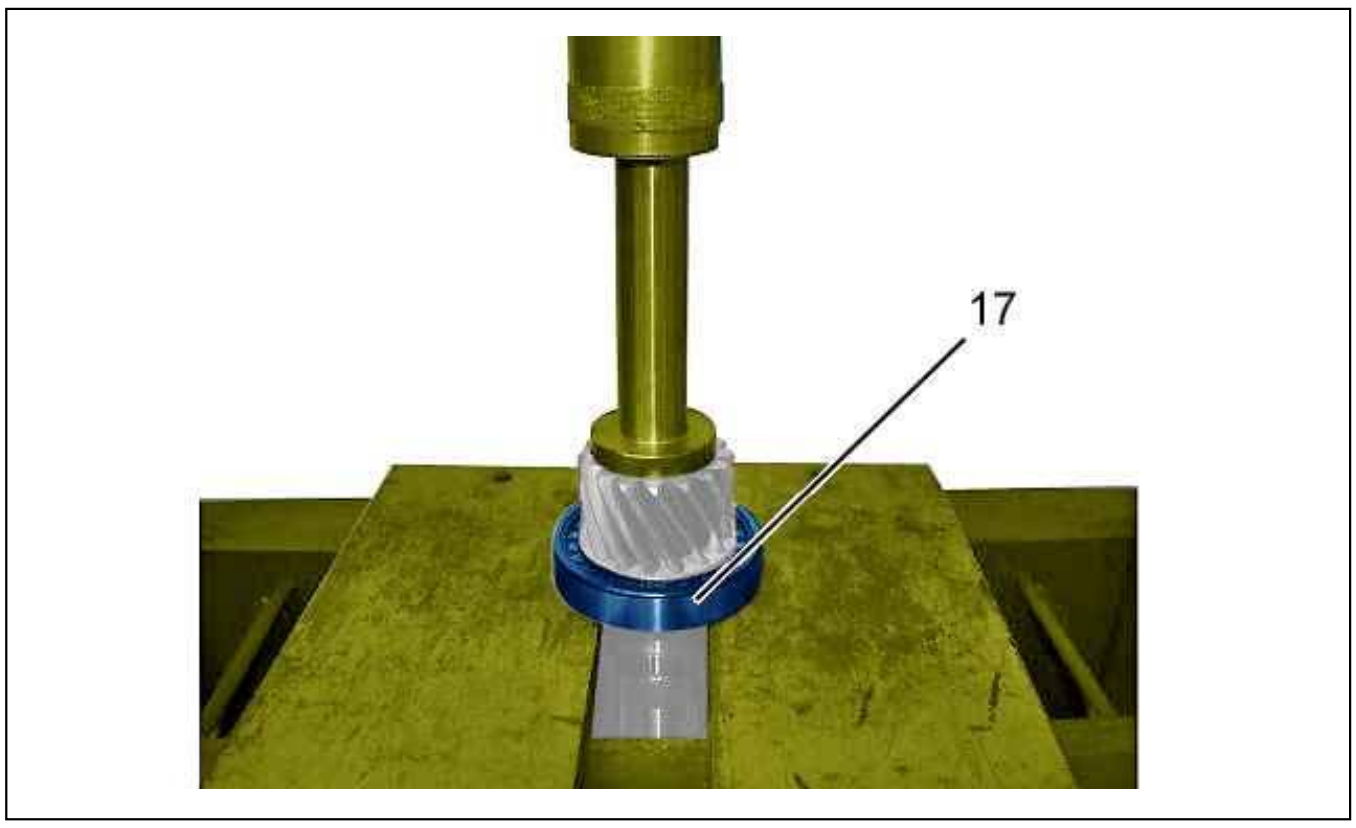

Figure : B2CM0JQD

Refit :

- The bearing (17)
- The circlip (16)

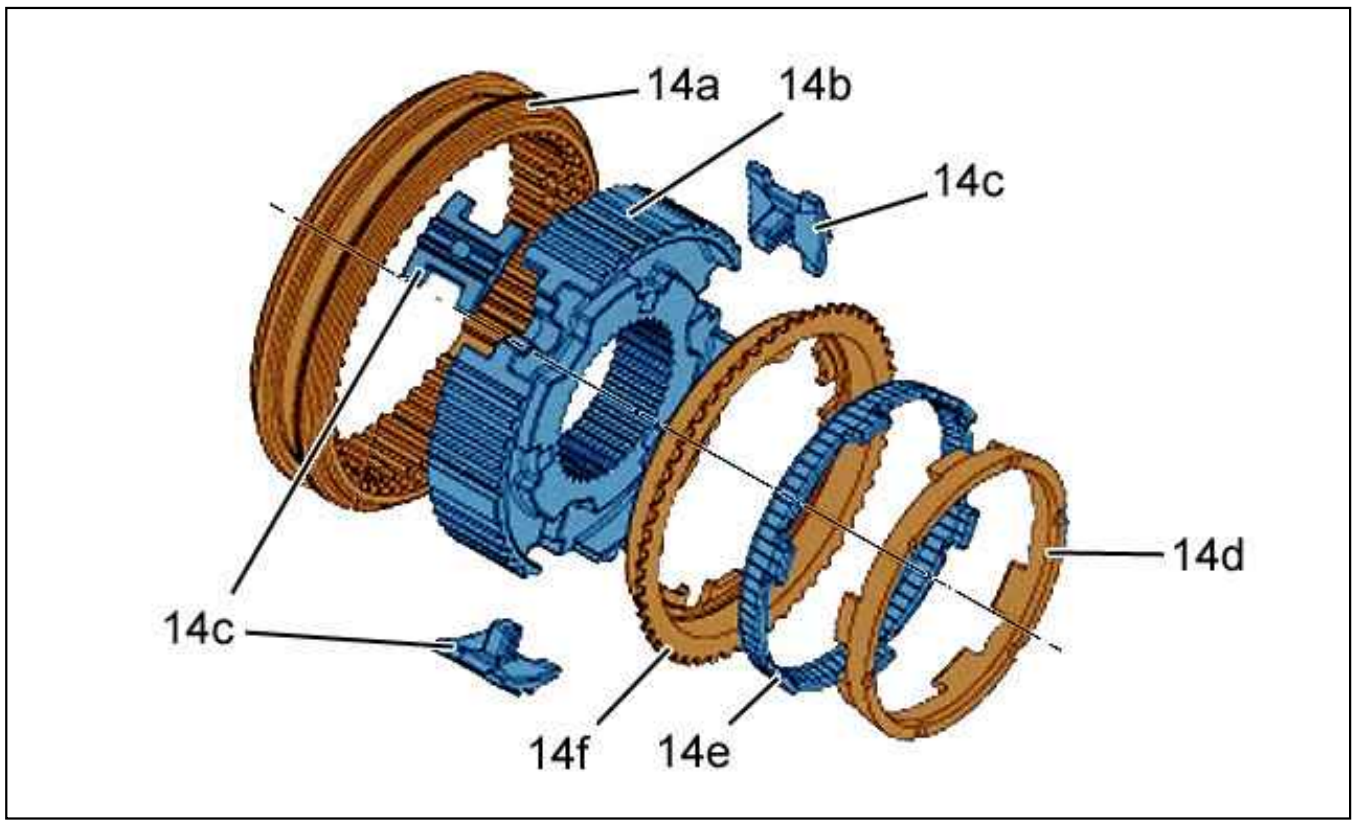

Figure : B2CM0JRD

CAUTION : Check the state of wear of the synchroniser hub, the sleeve, and the inserts (replace if necessary).

CAUTION : Always replace : The synchroniser rings.

Refit the reverse gear synchroniser :

- Position the inserts (14c) on the hub (14b)
- Introduce the sleeve (14a)
- Fit the synchroniser ring (14f) on the hub (14b)
- Fit the tapered rings (14d), (14e) on the synchroniser ring (14f)

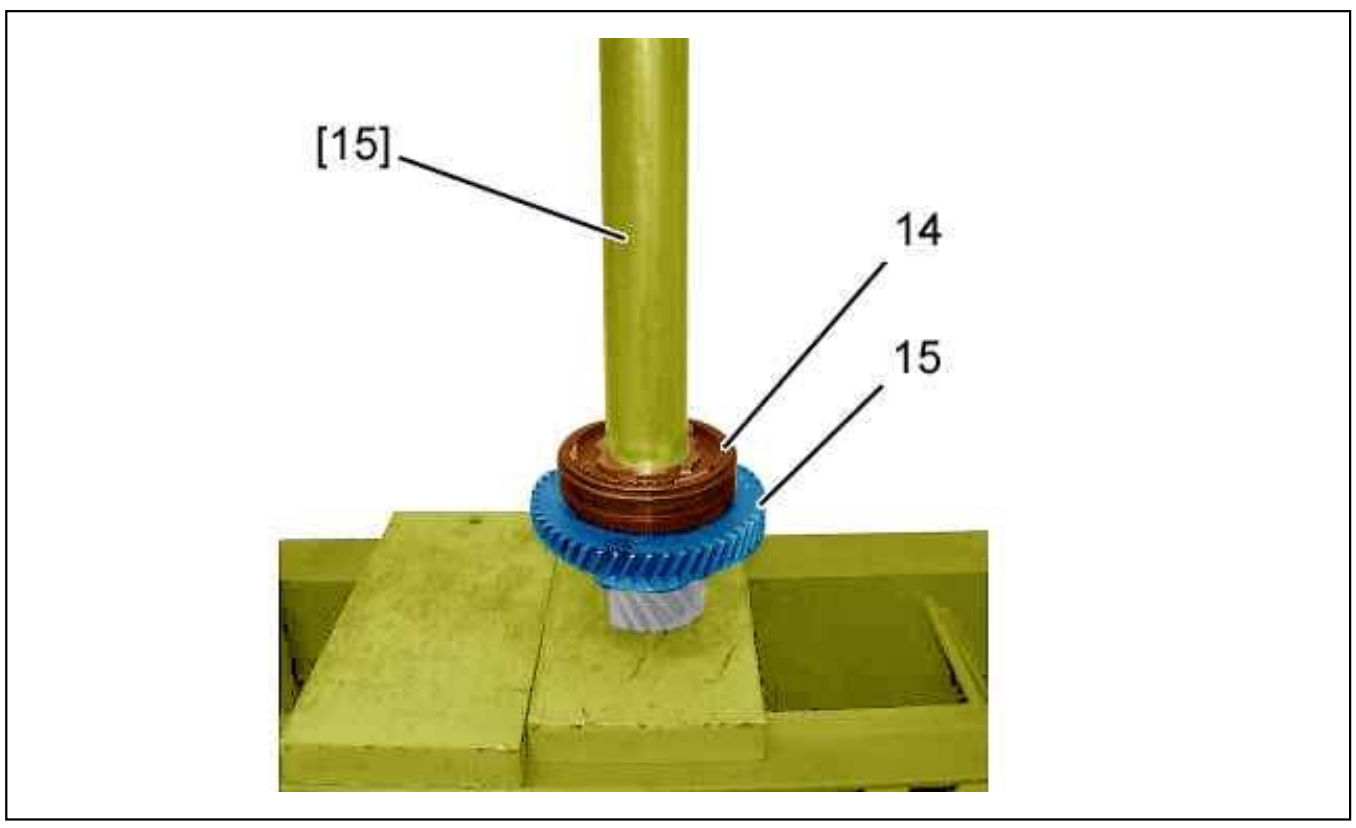

Figure : B2CM0JSD

CAUTION : Centre the lugs on the tapered ring of the synchroniser in relation to their positions on the reverse gear pinion.

Refit :

- The reverse gear pinion (15) bearing
- The reverse gear synchroniser (14) ; Using tool [15]

CAUTION : Make sure that the reverse gear pinion (15) turns freely.

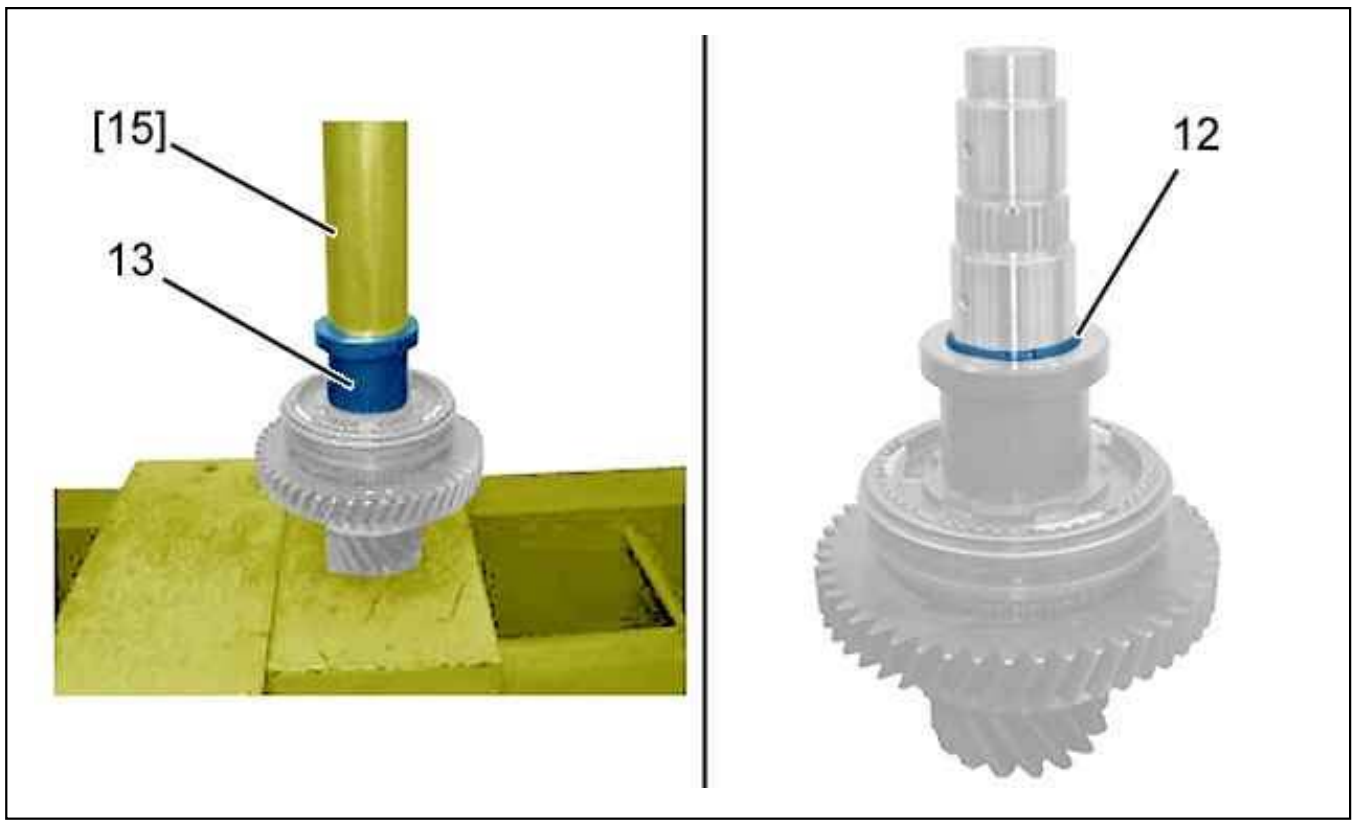

Figure : B2CM0JTD

Refit :

- The spacer (13) ; Using tool [15]
- The circlip (12) ; Using tool [10]

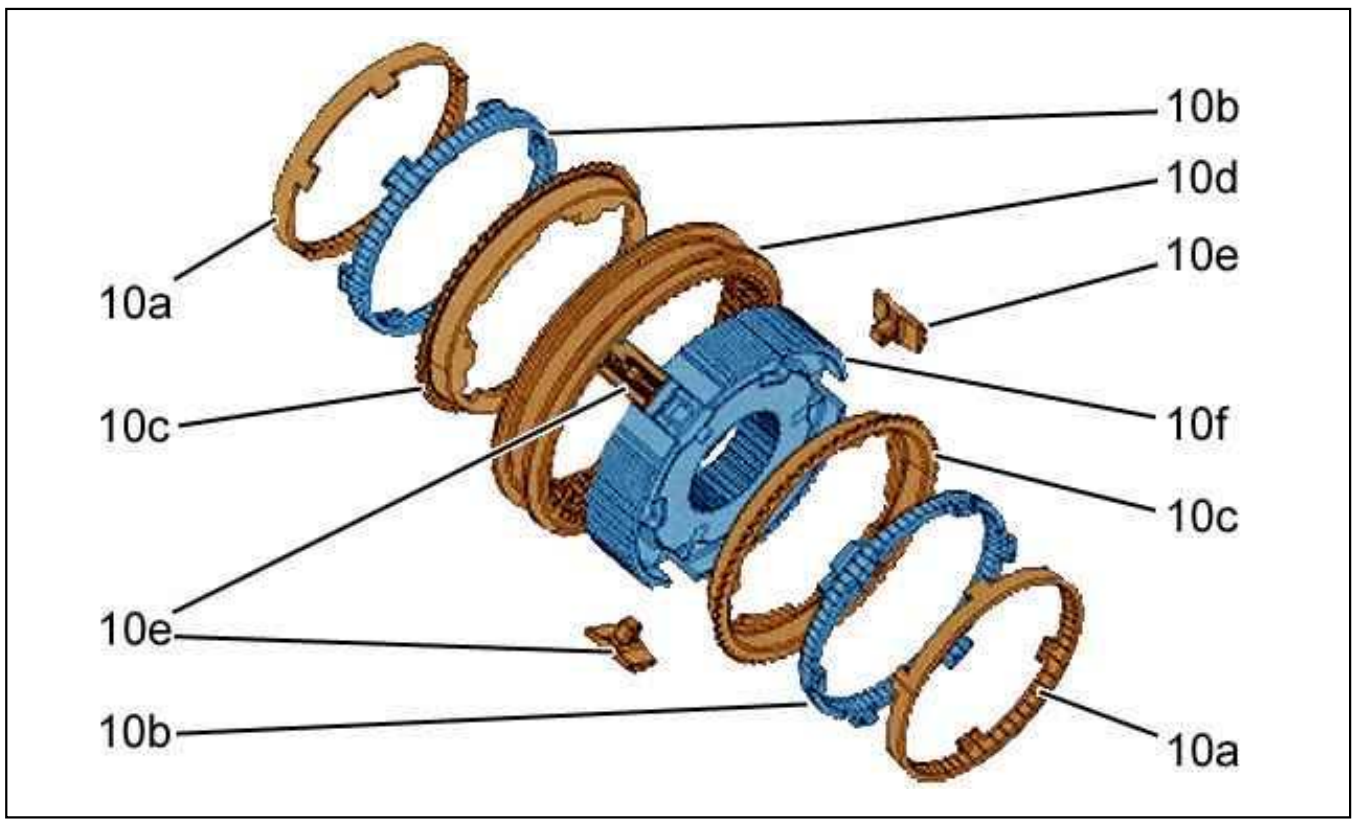

Figure : B2CM0JUD

CAUTION : Check the state of wear of the synchroniser hub, the sleeve, and the inserts (replace if necessary).

CAUTION : Always replace : The synchroniser rings.

Refit the 3rd/4th gear synchroniser :

- Position the inserts (10e) on the hub (10f)
- Introduce the sleeve (10d)
- Fit the synchroniser rings (10c) on the hub (10f)
- Fit the tapered rings (10b), (10a) on the synchroniser ring (10c)

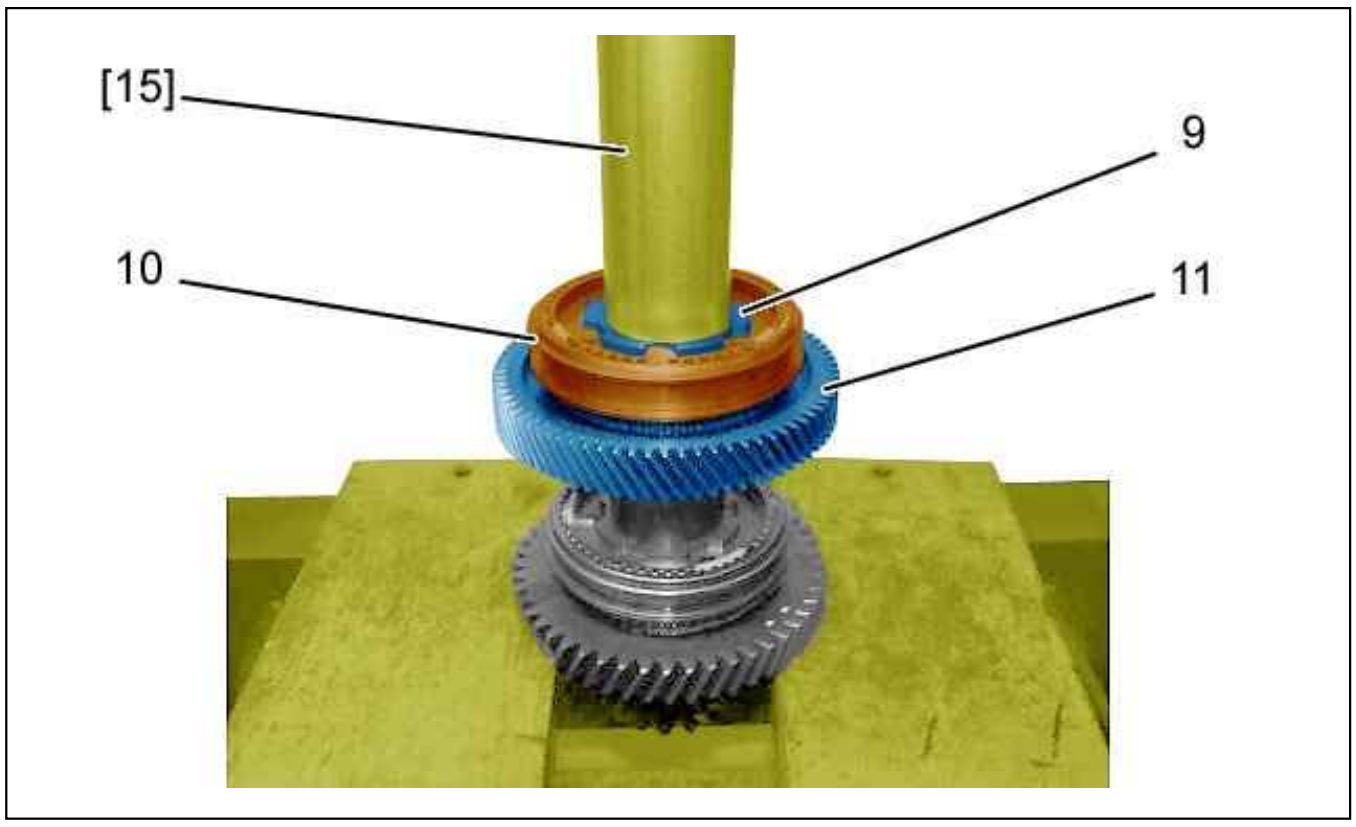

Figure : B2CM0JVD

CAUTION : Centre the lugs located on the tapered ring of the synchroniser in relation to their positions on the 3rd gear pinion.

Refit :

- The 3rd speed gear (11) (Pinion complete with its bearing)
- The 3rd/4th synchronizer ring (10) ; Using tool [15]
- The circlip (9) ; Using tool [10]

CAUTION : Check that the 3rd gear pinion (11) turns freely.

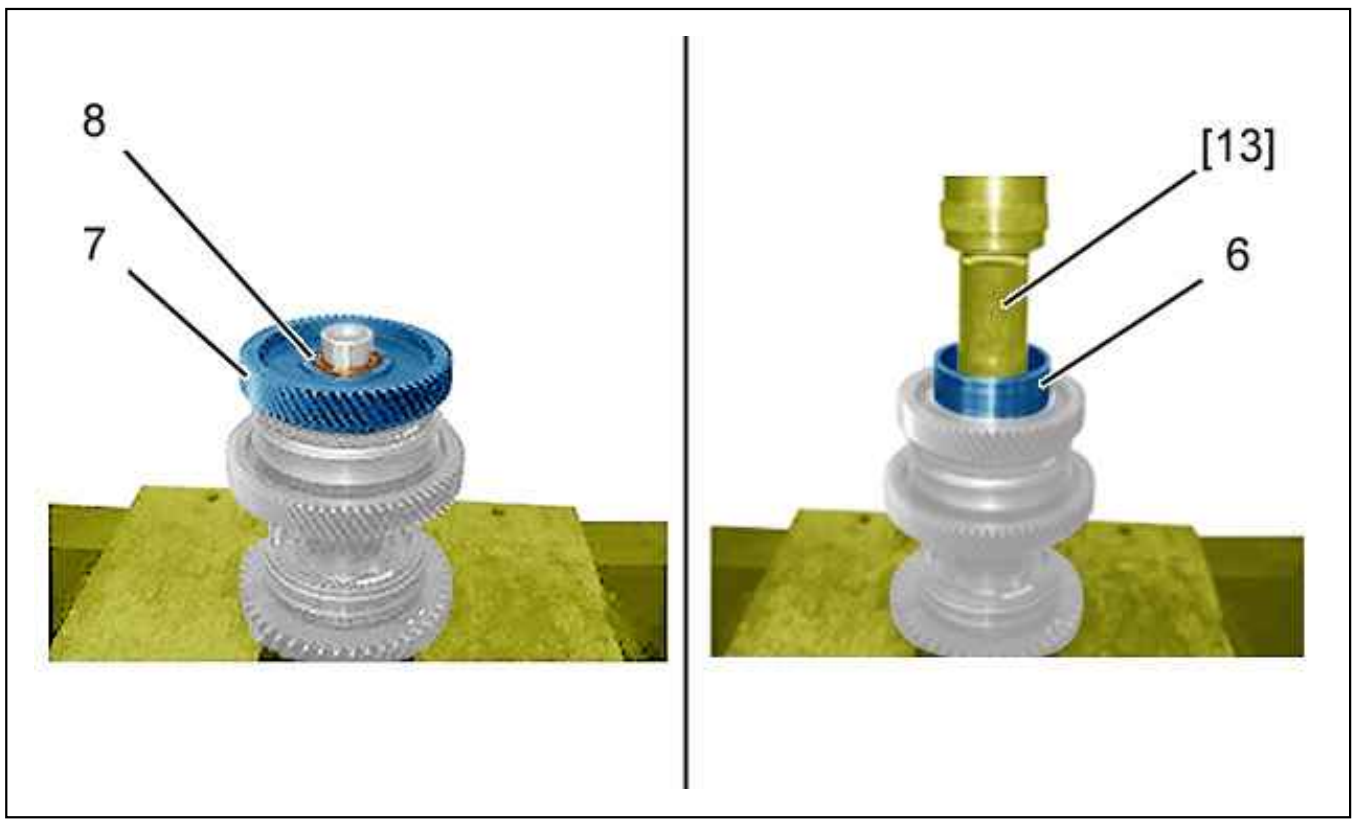

Figure : B2CM0JWD

CAUTION : Centre the 4th gear pinion (7) in relation to the lugs present on the tapered centring ring of the synchroniser.

Refit :

- The 4th speed gear (7) (Pinion complete with its bearing) (8)
- The bearing (6) ; Using tool [13] and press

CAUTION : Check that the 4th gear pinion (7) turns freely.

4. Lower output shaft

4.1. Stripping

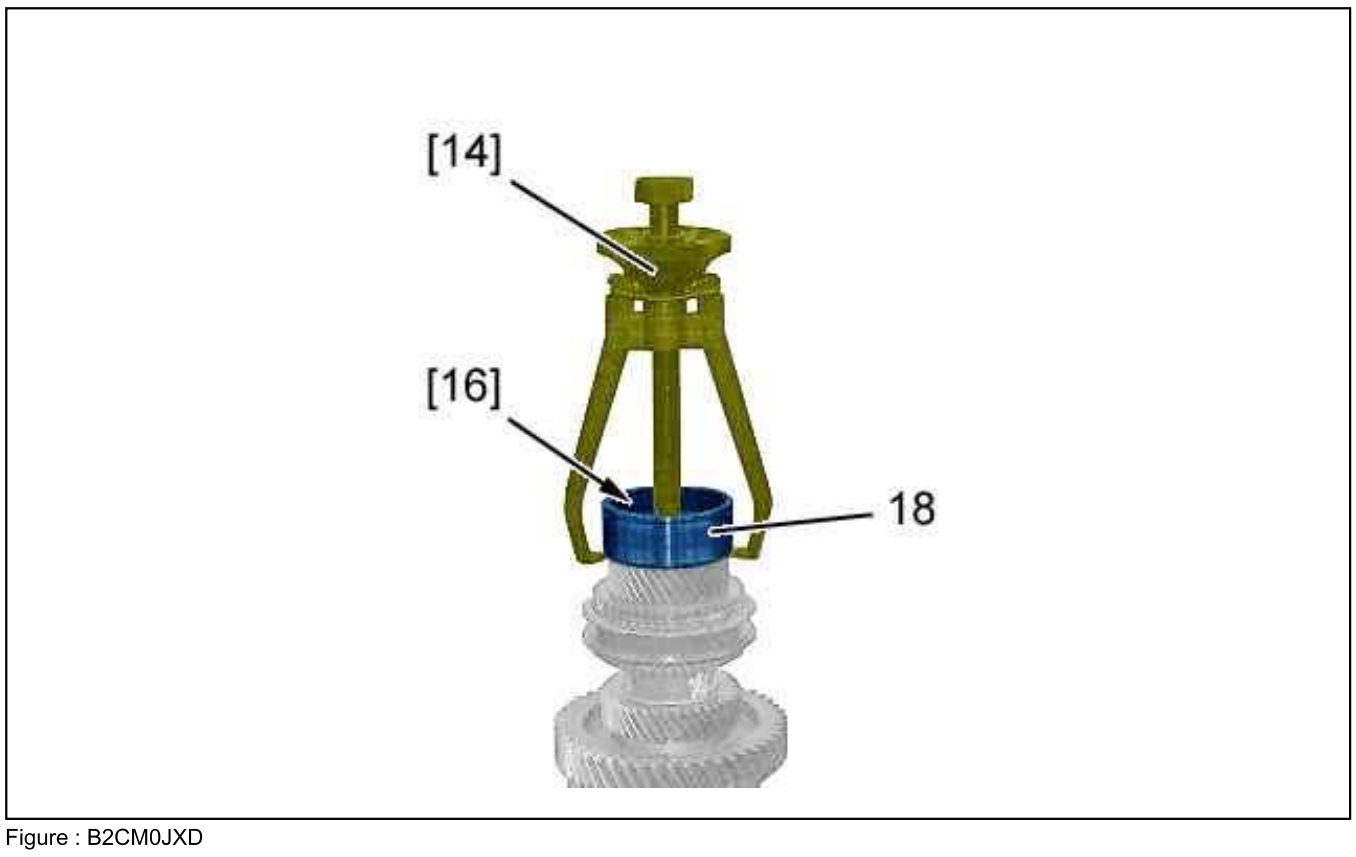

Figure : B2CM0JXD

Position the tools [14], [16].
Remove the bearing (18) ; Using the tools [14,] [16].

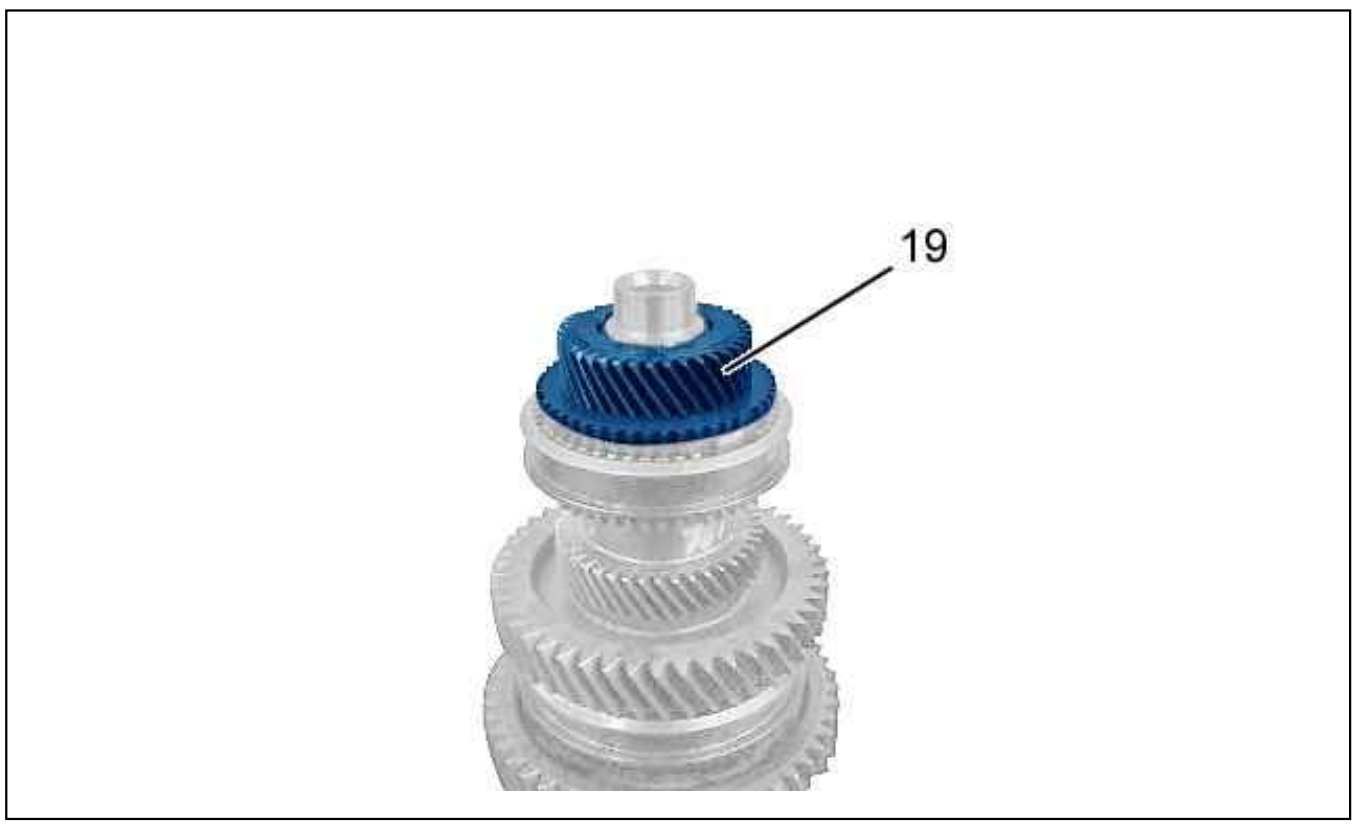

Figure : B2CM0JYD

Remove : The 6th gear pinion (19) (Pinion complete with its bearing).

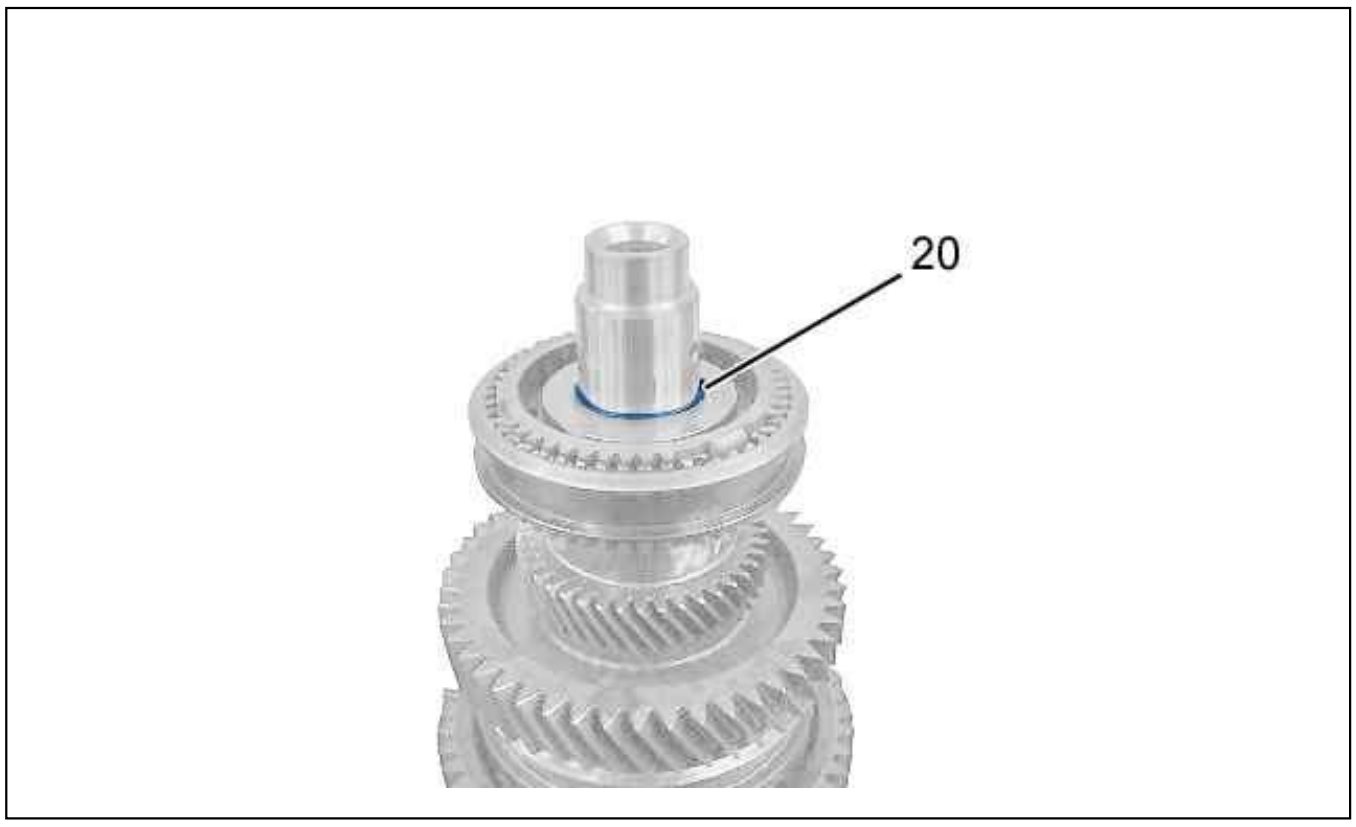

Figure : B2CM0JZD

Remove circlip (20) ; Using tool [10].

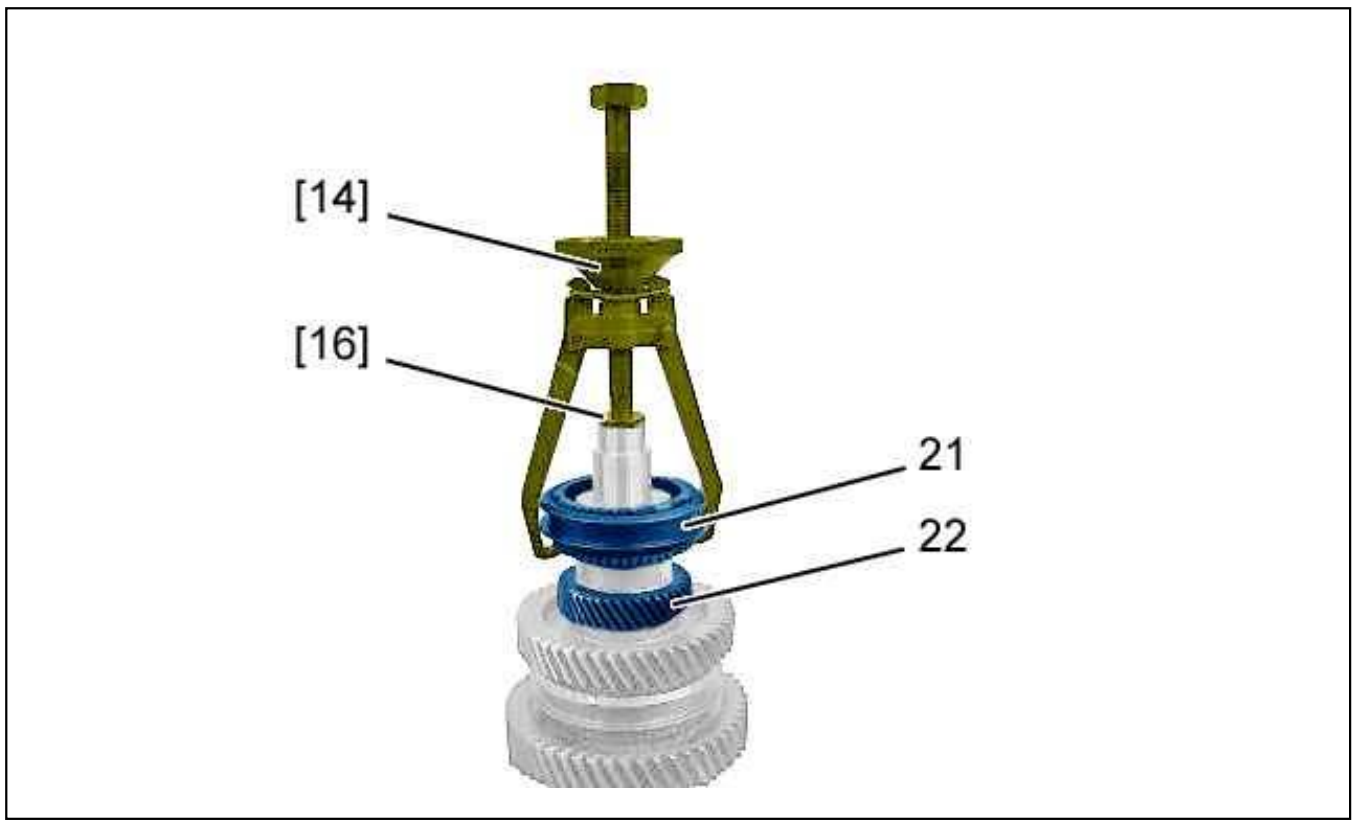

Figure : B2CM0K0D

CAUTION : Keep the synchroniser (21) well centred on its hub.

Position the tools [14], [16].

Remove :

- The 5th/6th gear synchroniser (21) ; Using the tools [14], [16]
- 5th speed gear (22) (Pinion complete with its bearing)

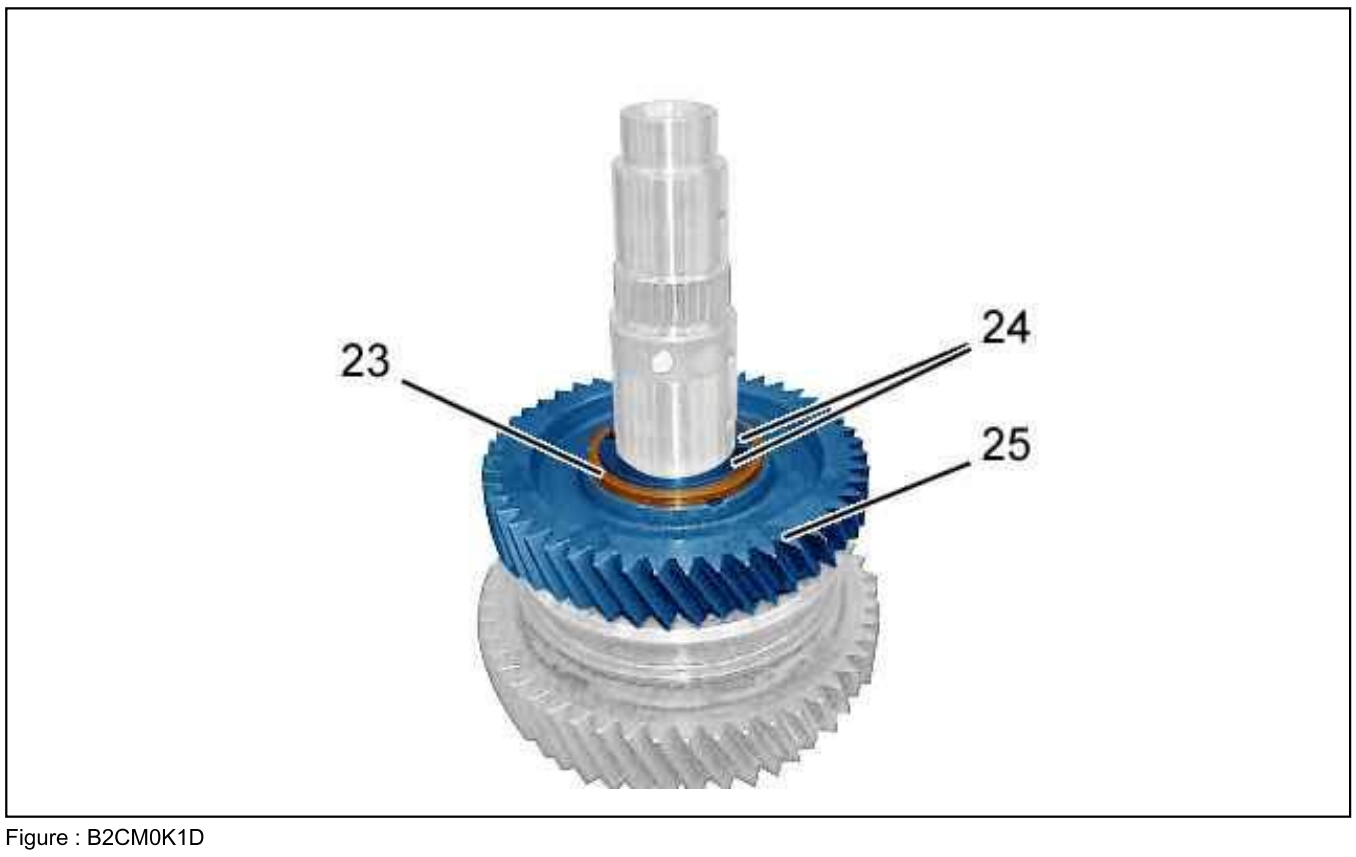

Figure : B2CM0K1D

Remove :

- The retaining washer (23)
- The split rings (24)
- 2nd speed gear (25) (Pinion complete with its bearing)

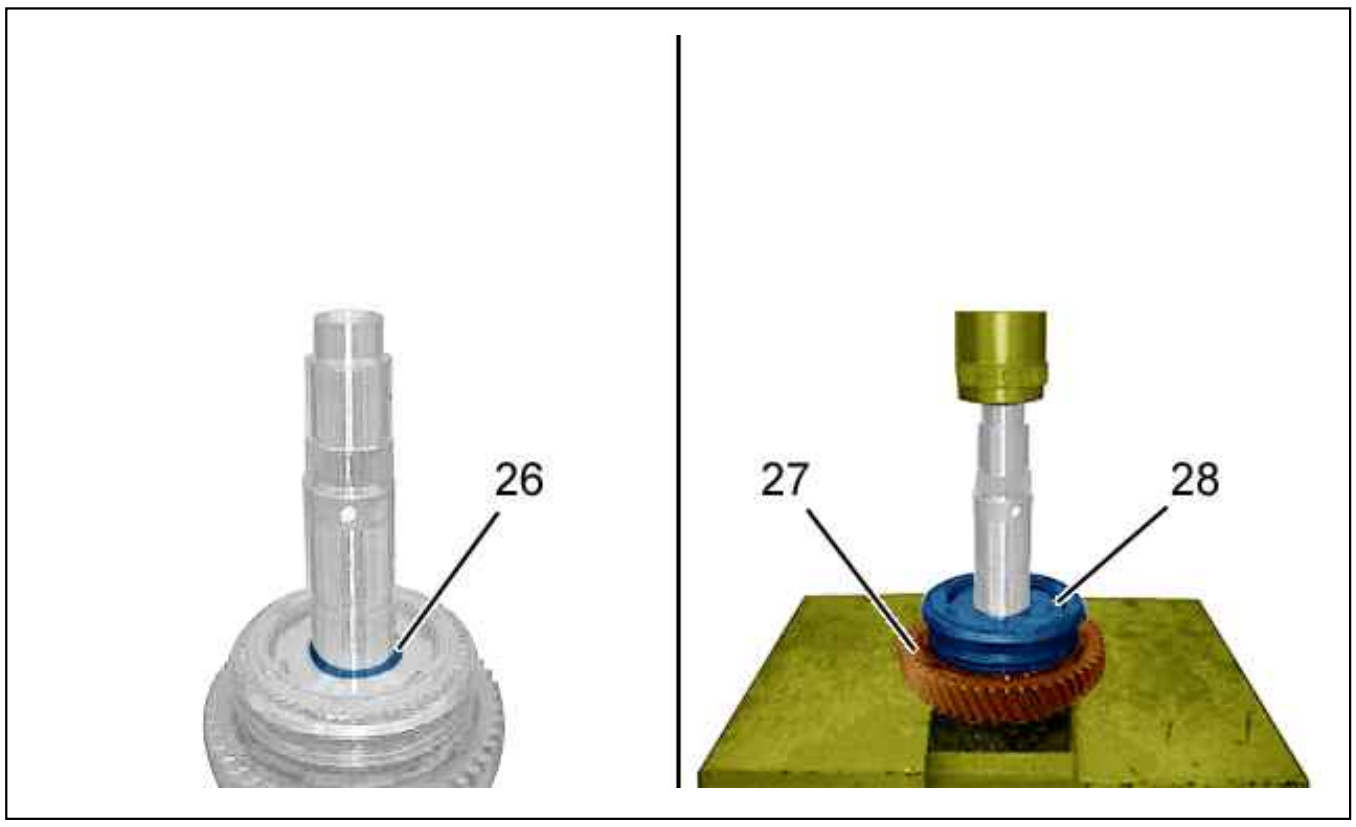

Figure : B2CM0K2D

CAUTION : Keep the synchroniser (28) well centred on its hub.

Remove :

- The circlip (26) ; Using tool [10]
- The 1st/2nd synchronizer (28) ; Using a press
- 1st speed gear (27) (Pinion complete with its bearings) ; Using a press

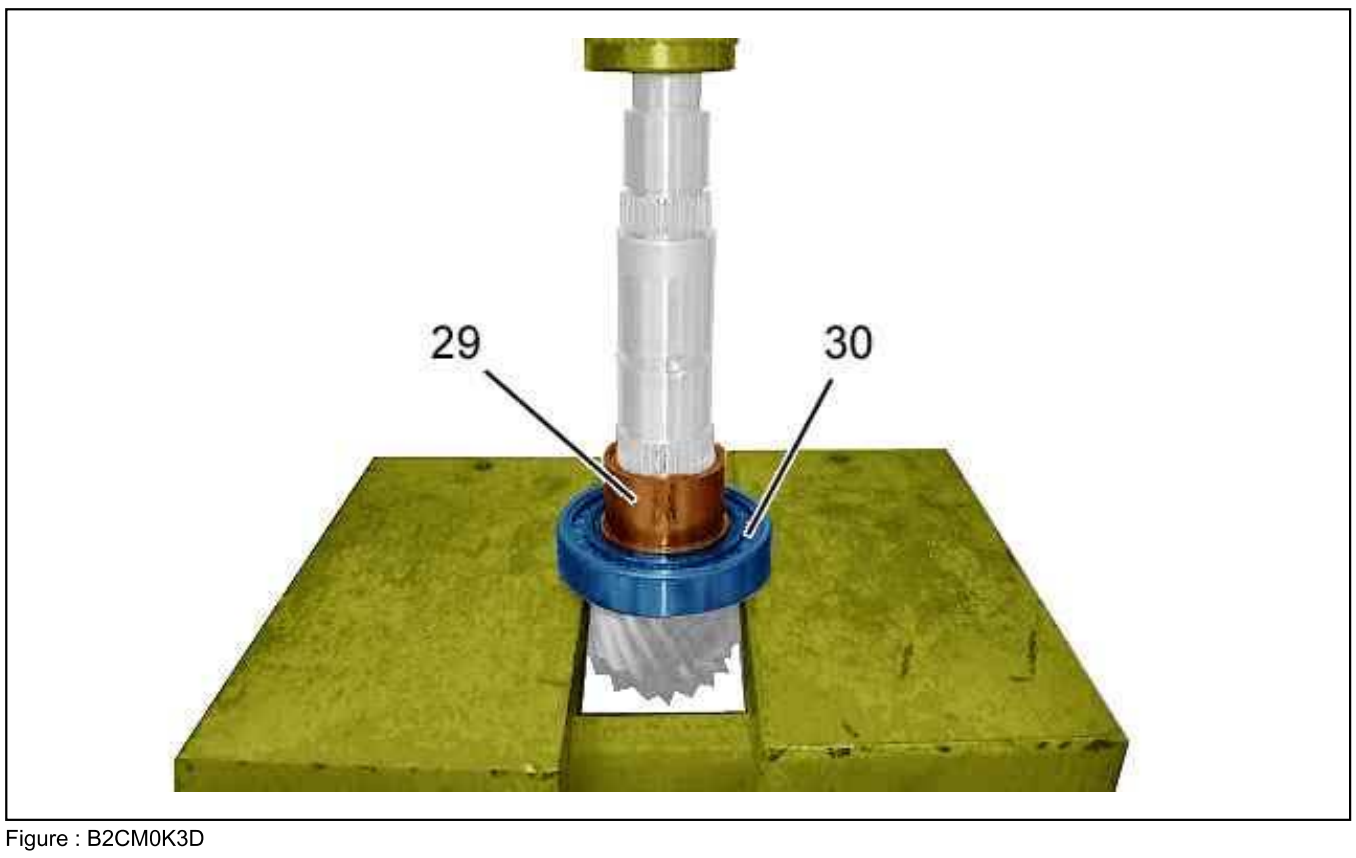

Figure : B2CM0K3D

Remove :

- The bearing (30) ; Using a press
- The spacer (29) ; Using a press

4.2. Re-assembling

CAUTION : Oil the pinion gears and the synchronizer rings with transmission oil.

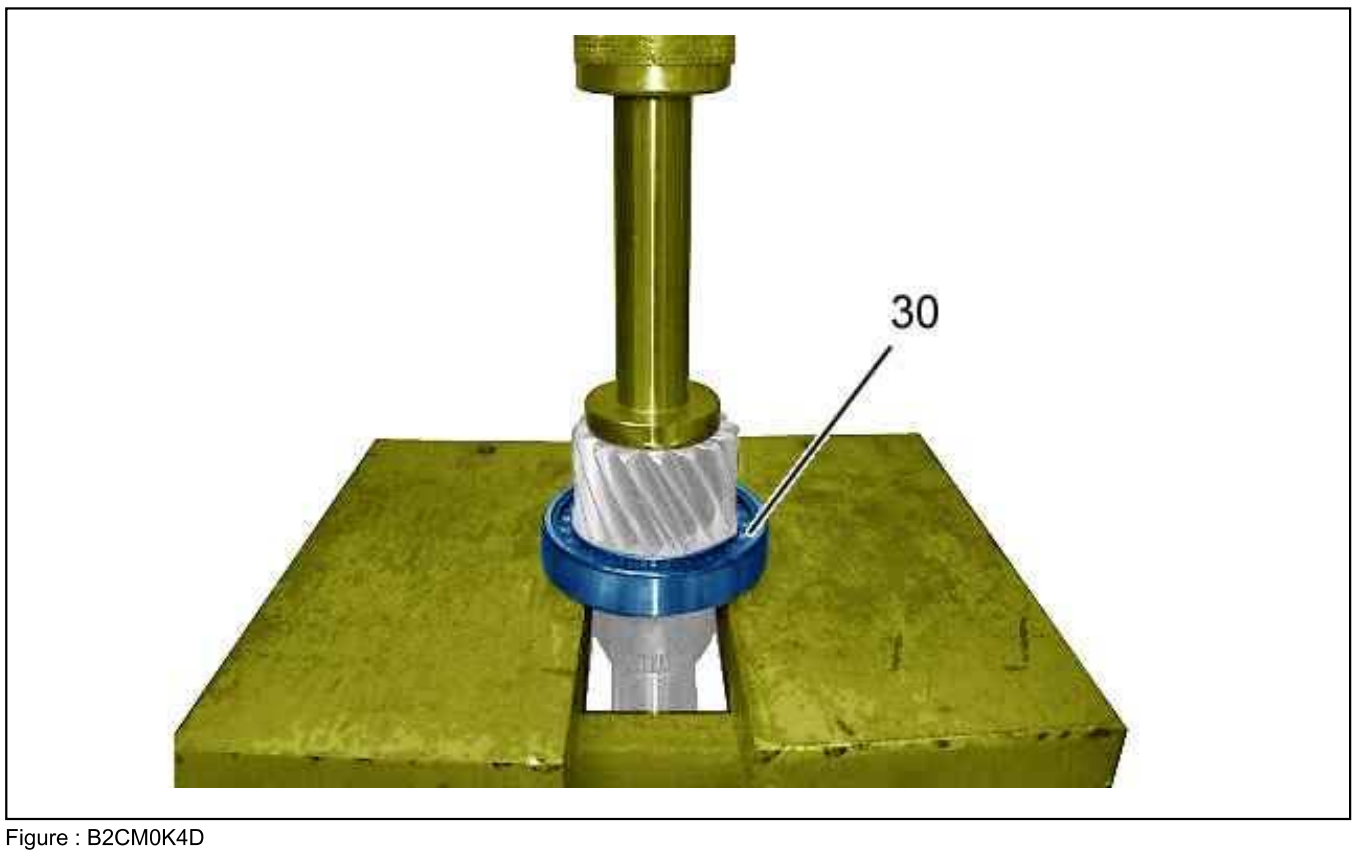

Figure : B2CM0K4D

Fit the bearing (30) ; Using a press.

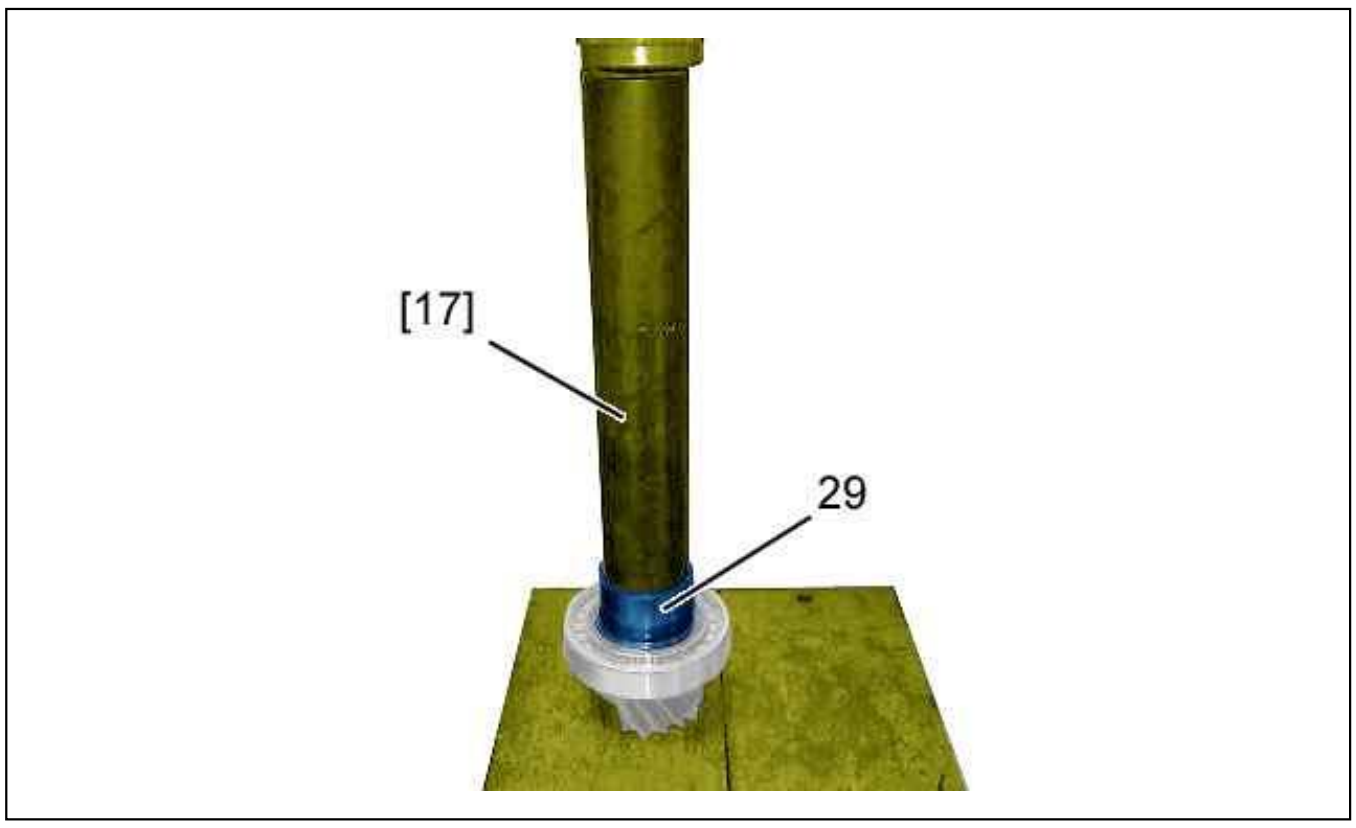

Figure : B2CM0K5D

Fit the spacer (29) ; Using tool [17] and press .

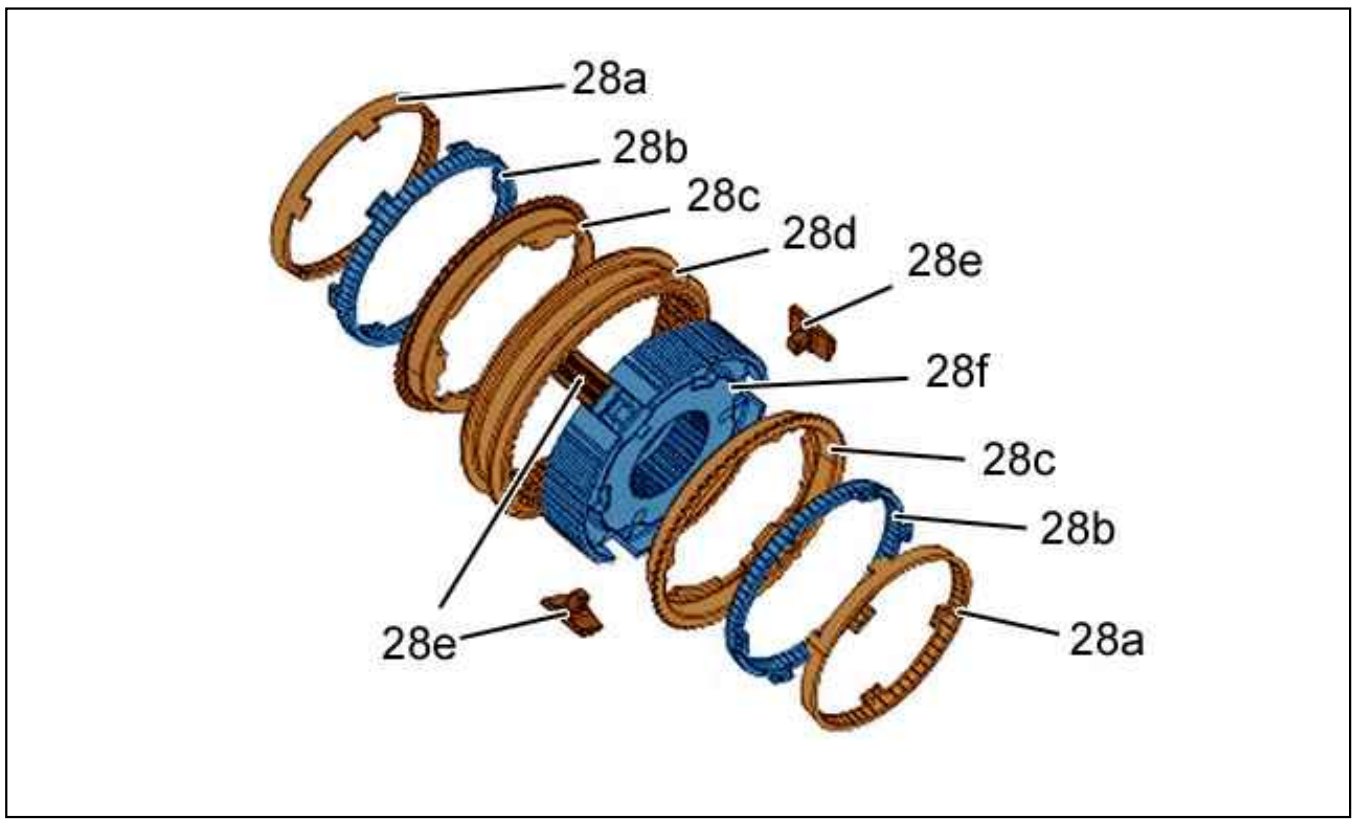

Figure : B2CM0K6D

CAUTION : Check the state of wear of the synchroniser hub, the sleeve, and the inserts (replace if necessary).

CAUTION : Always replace : The synchroniser rings.

Refit the 1st/2nd gear synchroniser :

- Position the inserts (28e) on the hub (28f)

- Introduce the sleeve (28d)
- Fit the synchroniser rings (28c) on the hub (28f)
- Fit the tapered rings (28b), (28a) on the synchroniser ring (28c)

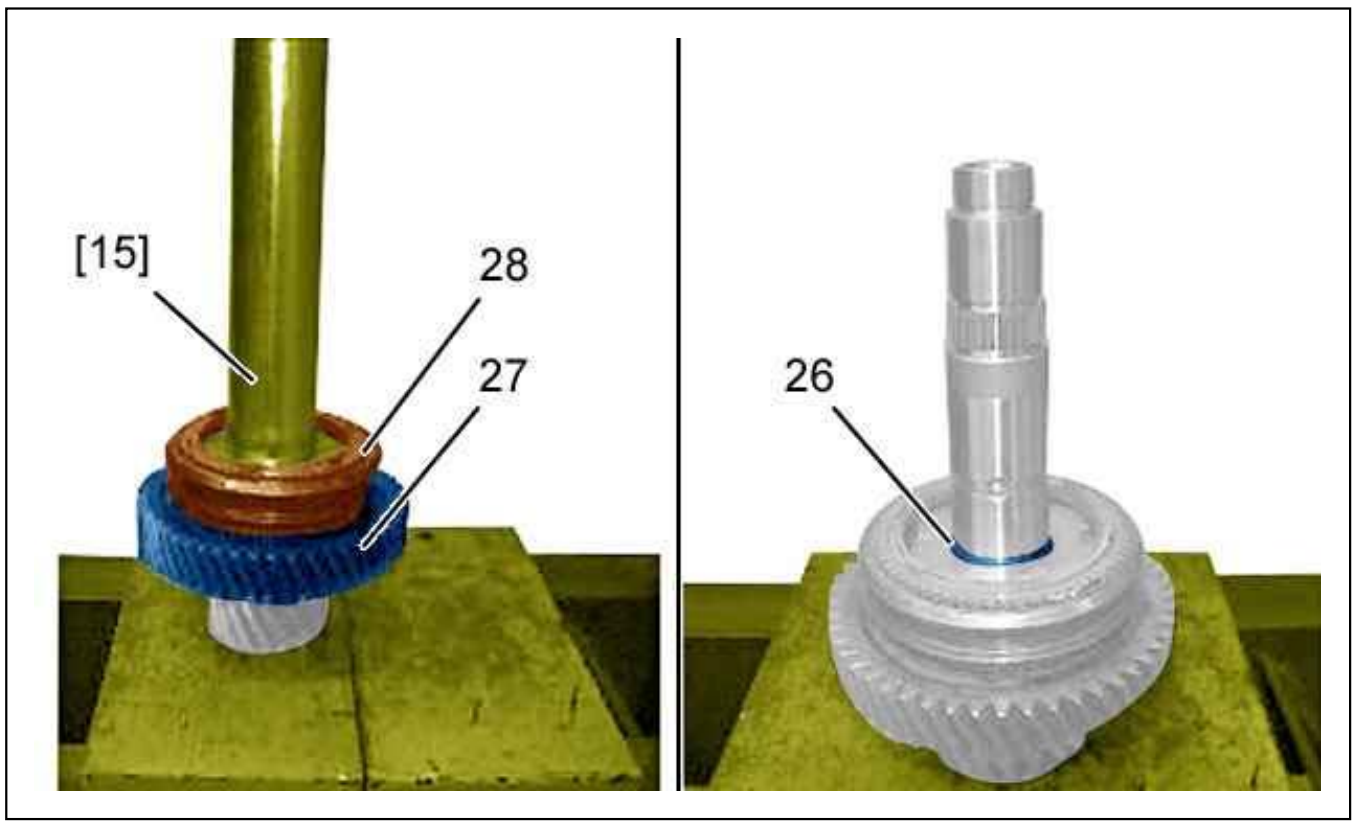

Figure : B2CM0K7D

CAUTION : Centre the lugs located on the tapered ring of the synchroniser in relation to their positions on the 1st gear pinion.

Refit :

- 1st speed gear (27) (Pinion complete with its bearings)
- The synchroniser (28) ; Using tool [15] and press
- The circlip (26) ; Using tool [10]

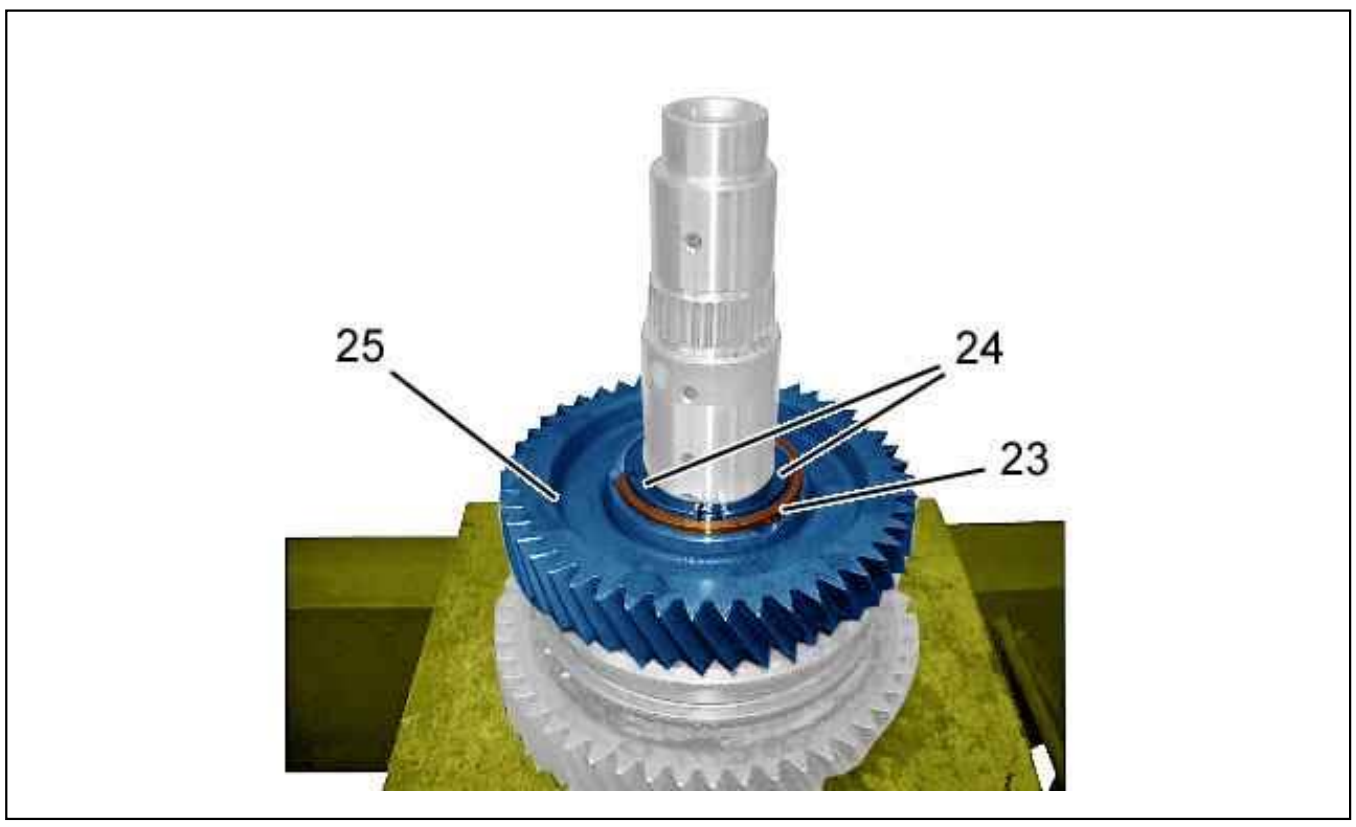

Figure : B2CM0K8D

CAUTION : Centre the 2nd gear pinion (25) in relation to the lugs present on the tapered centring ring of the sychroniser.

Refit :

- 2nd speed gear (25) (Pinion complete with its bearing)
- The split rings (24)
- The retaining washer (23)

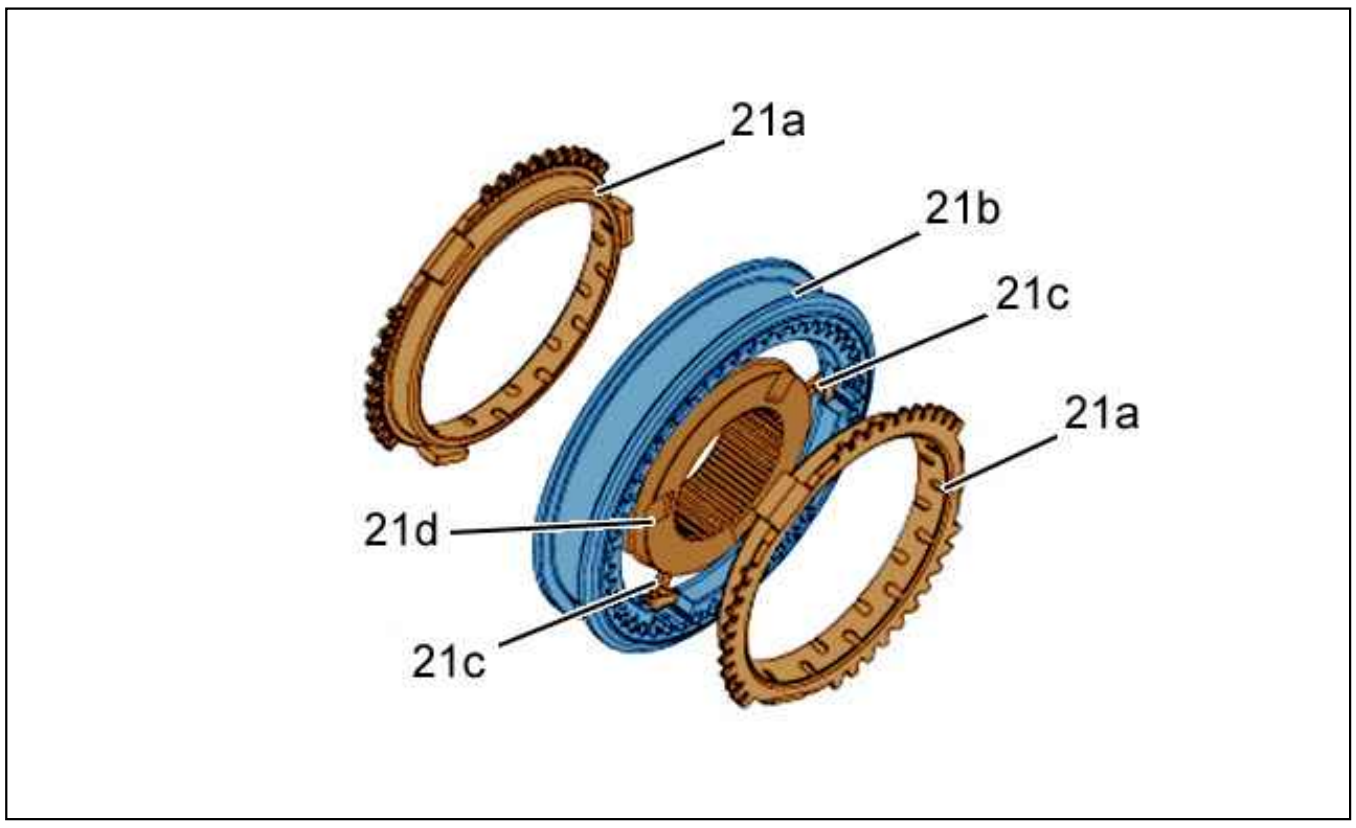

Figure : B2CM0K9D

CAUTION : Check the state of wear of the synchroniser hub, the sleeve, and the inserts (replace if necessary).

CAUTION : Always replace : The synchroniser rings.

Refit the 5th/6th gear synchroniser :

- Position the inserts (21c) on the hub (21d)
- Introduce the sleeve (21b)
- Fit the synchroniser rings (21a) on the hub (21d)

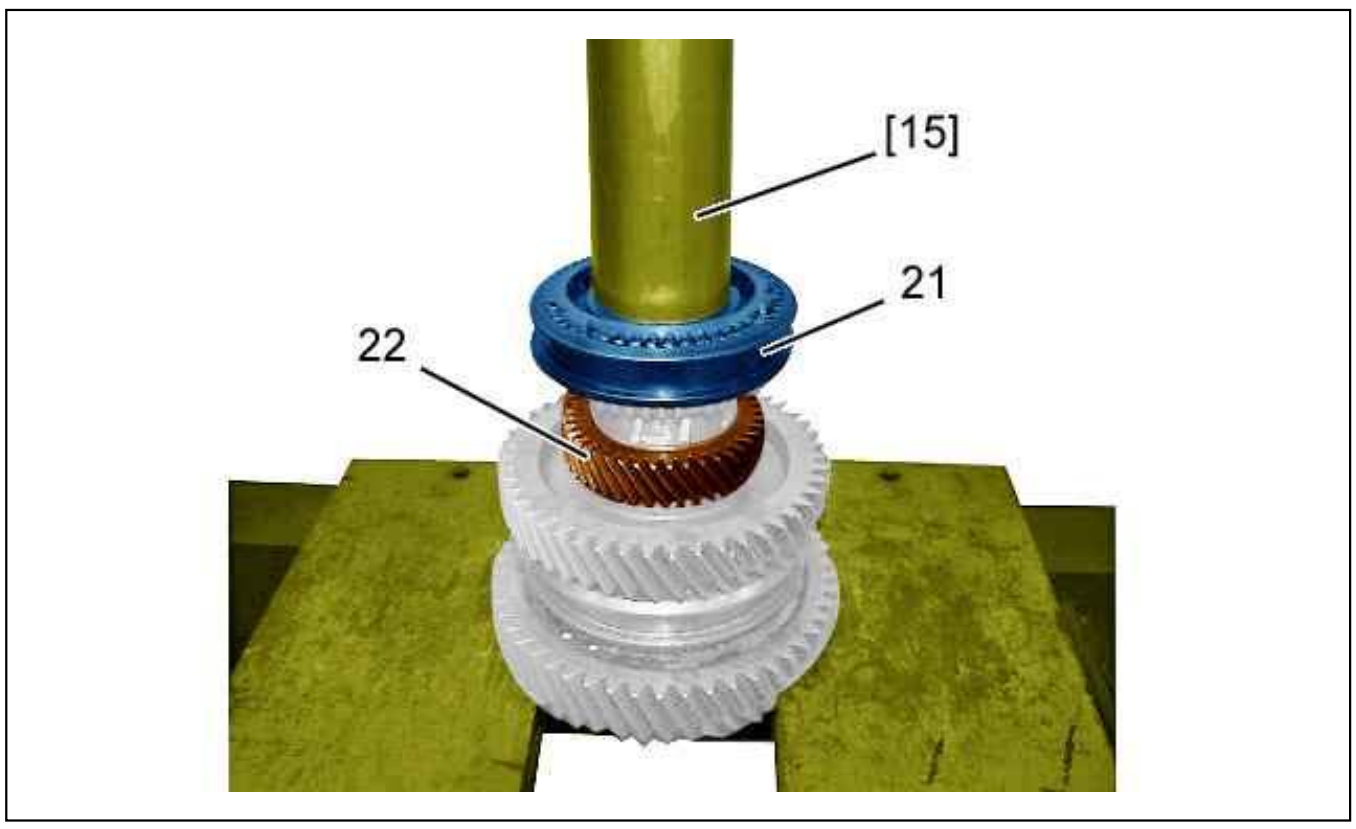

Figure : B2CM0KAD

CAUTION : Centre the lugs located on the tapered ring of the synchroniser in relation to their positions on the 5th gear pinion.

Refit :

- 5th speed gear (22) (Pinion complete with its bearing)
- The 5th/6th gear synchroniser (21) ; Using tool [15]

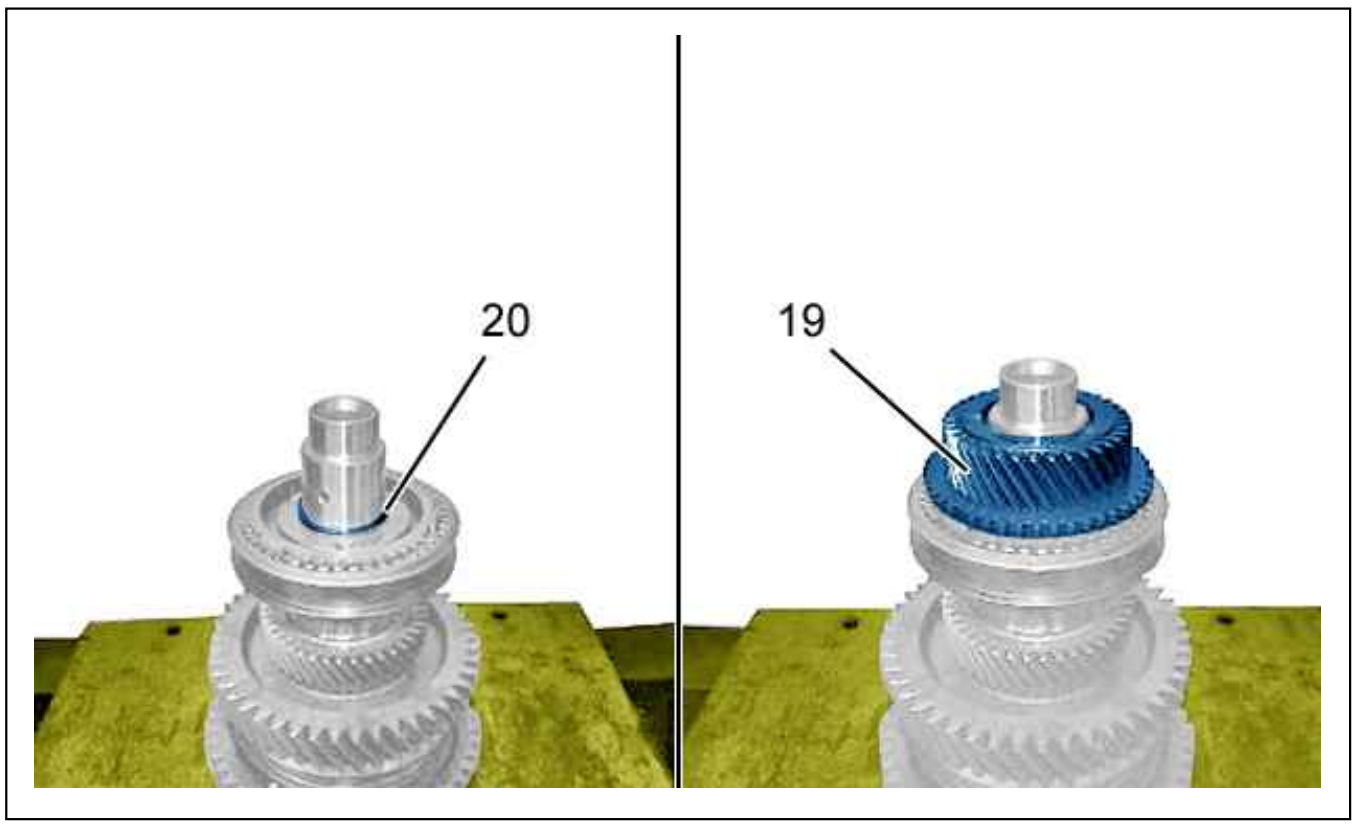

Figure : B2CM0KBD

Refit :

- The circlip (20) ; Using tool [10]
- The 6th gear pinion (19) (Pinion complete with its bearing)

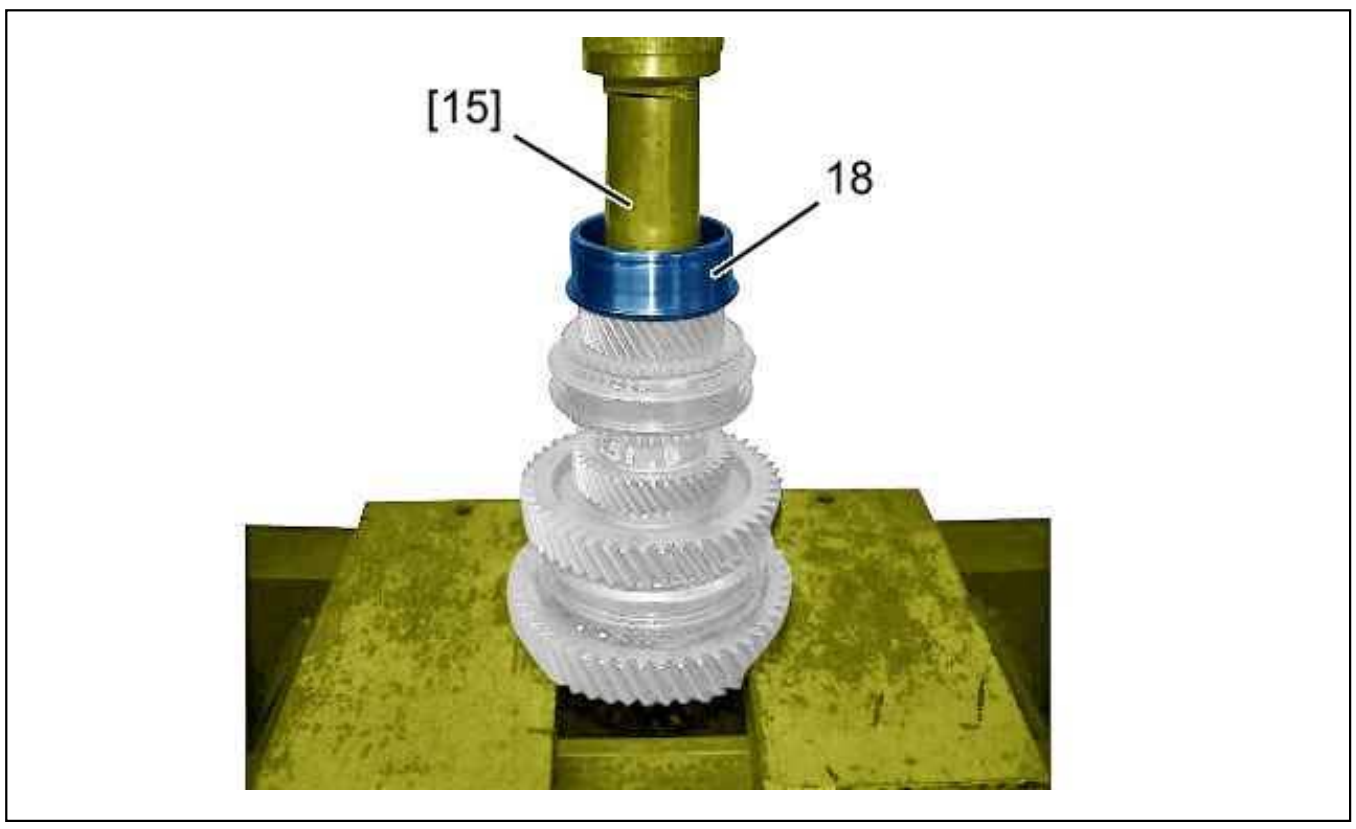

Figure : B2CM0KCD

Fit the bearing (18) ; Using tool [15].

5. Differential housing

5.1. Stripping

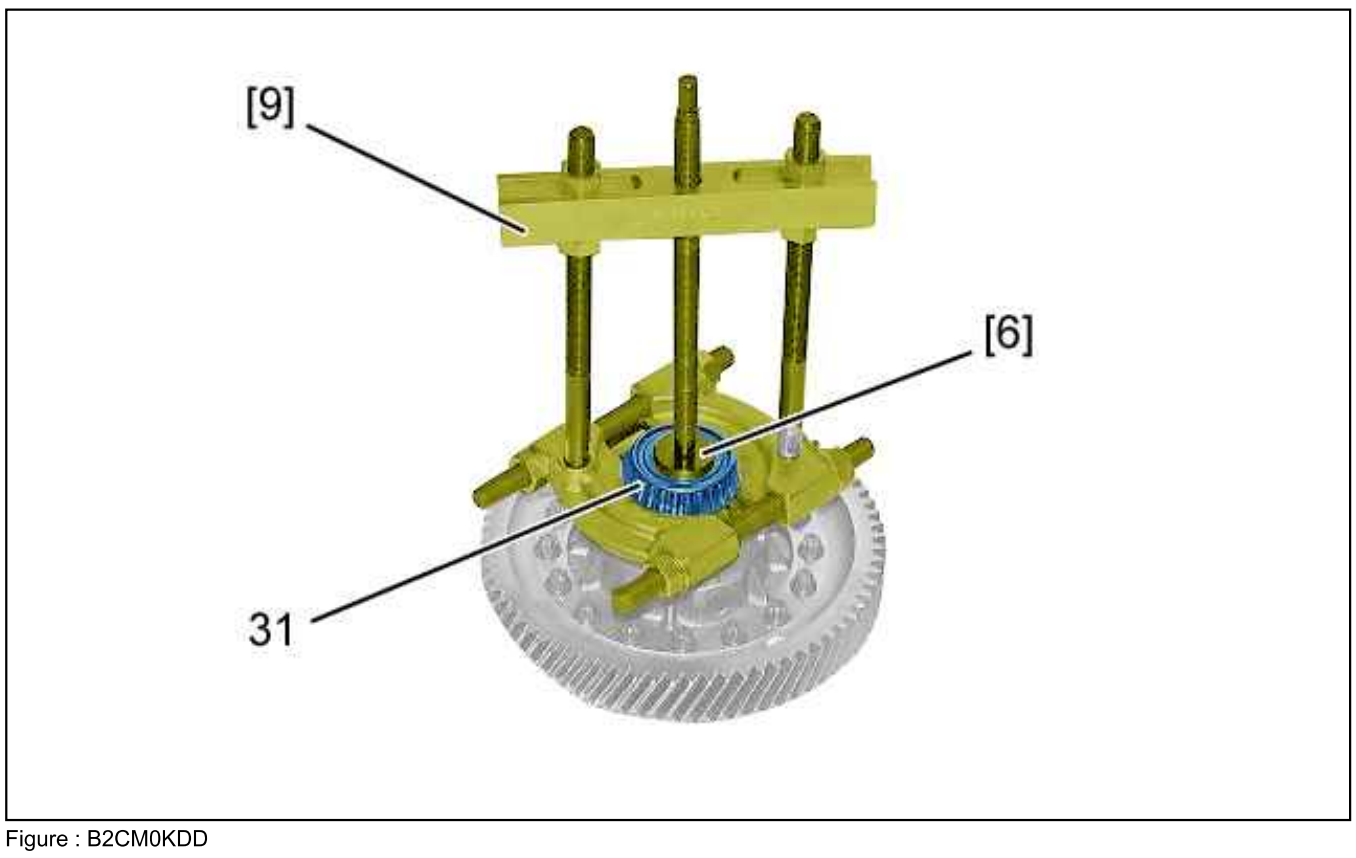

Figure : B2CM0KDD

Position the tools [6], [9].
Remove the bearings (31) ; Using the tools [6], [9].

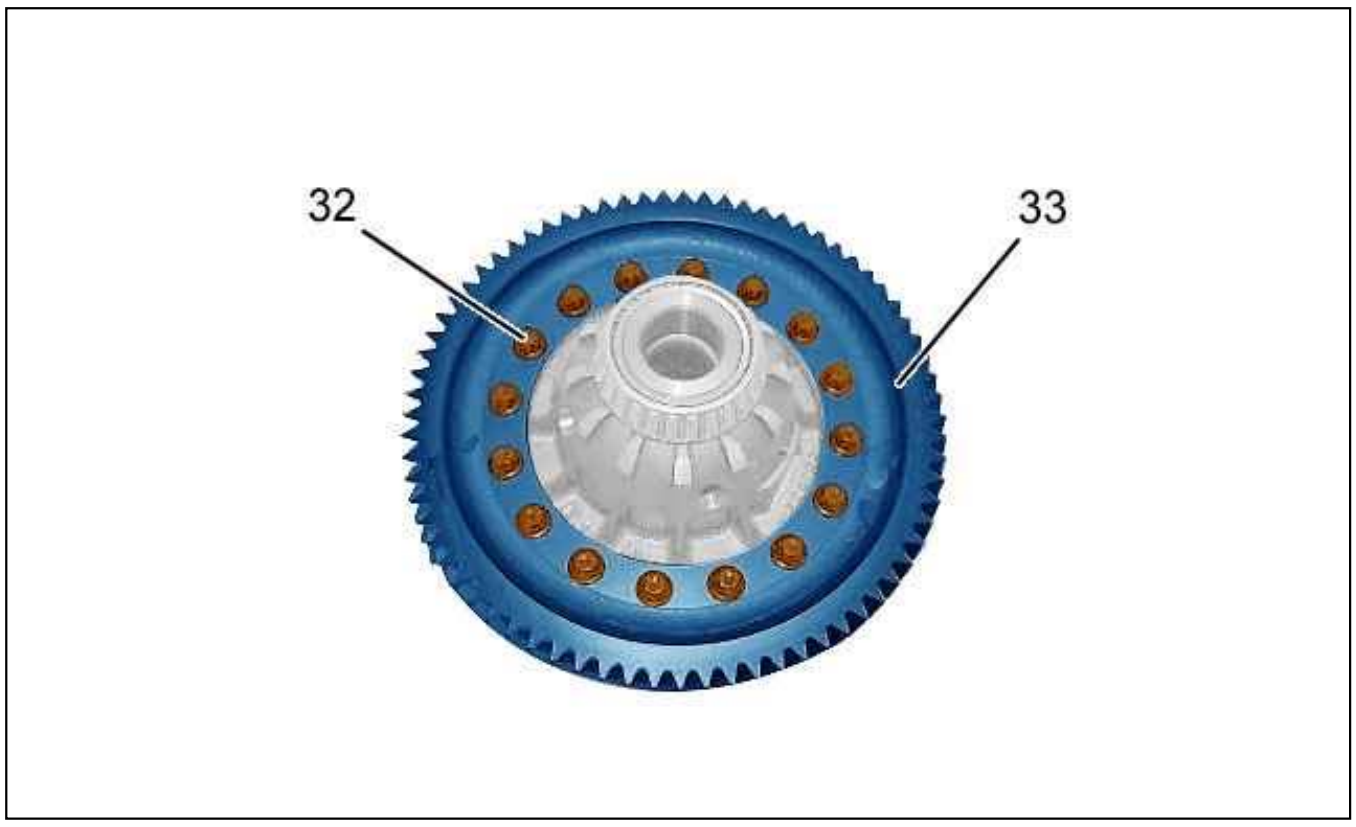

Figure : B2CM0KED

Remove :

- The bolts (32)
- Differential crown wheel (33)

5.2. Re-assembling

Refit :

- Differential crown wheel (33)
- The bolts (32)

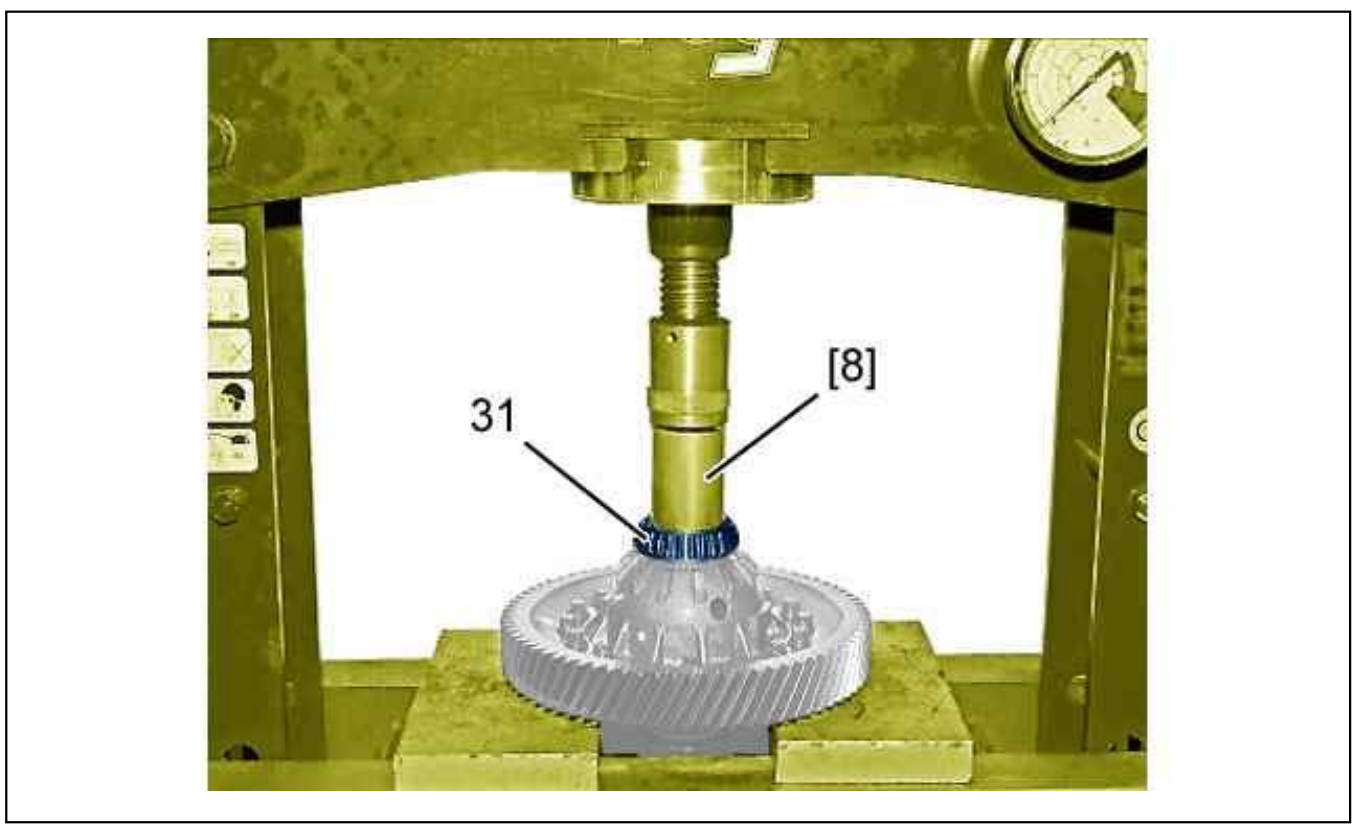

Figure : B2CM0KFD

Refit : The bearings (31) ; Using tool [8] and press .

REFITTING : MANUAL GEARBOX

ESSENTIAL : Observe the safety and cleanliness recommendations .

CAUTION : Comply with the conditions for cleaning and reassembling the gearbox .

CAUTION : Bearings removed must not be re-used.

1. Recommended tools

Presentation : Recommended tools .

2. Refitting : Differential housing

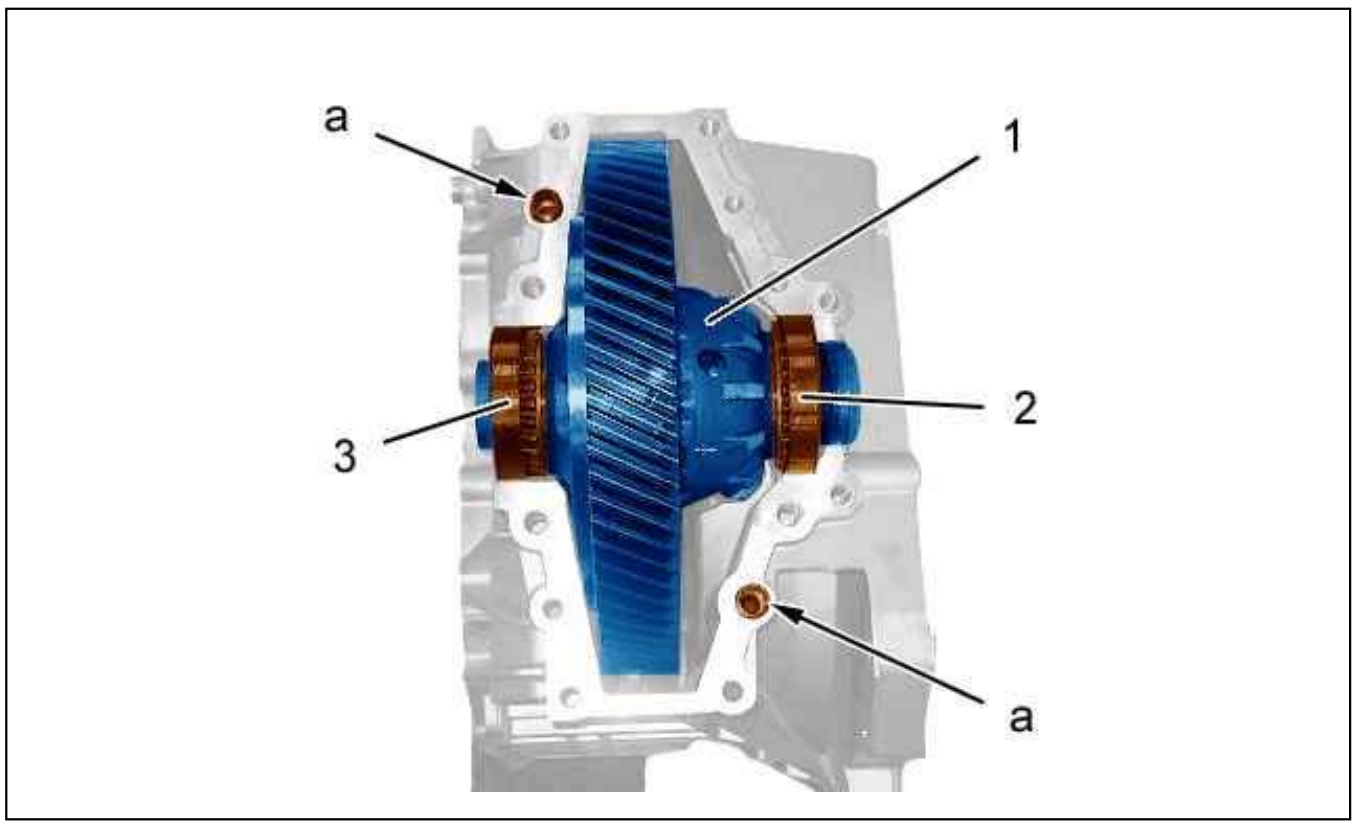

Figure : B2CM0HUD

Refit : The differential housing (1) with its exterior bearing bushes (2), (3).
Check that the locating dowels are in place (as "a").

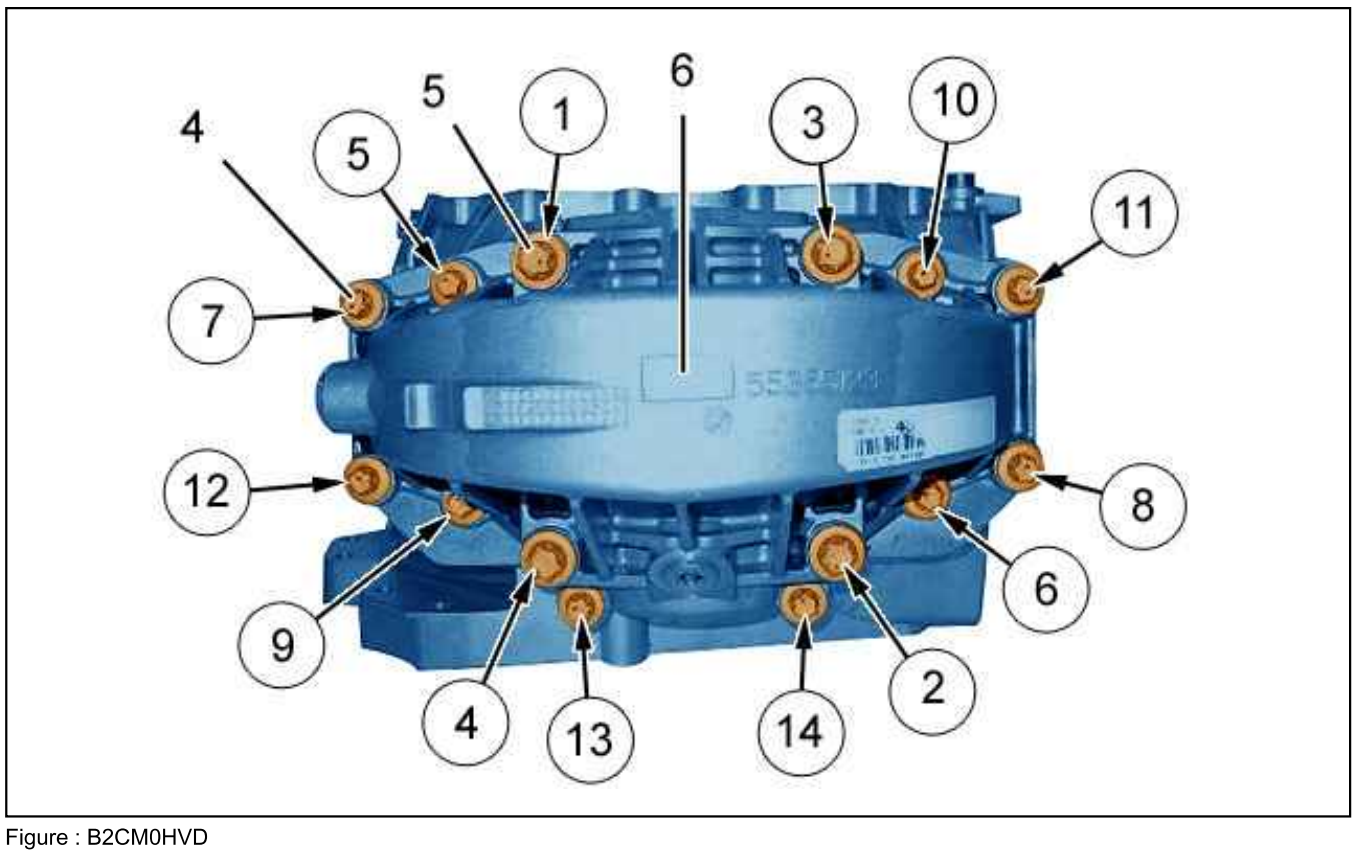

Figure : B2CM0HVD

Coat the joint face with a thin, even layer of sealing paste "E10" (Refer to the method : Recommended consumables (Mechanical).

CAUTION : Follow the tightening sequence (from 1 to 14).

Refit :

- The differential housing (6)
- The bolts M12 (5) ; Tighten to 11 ± 1 daN.m
- The bolts M10 (4) ; Tighten to 5 ± 0,5 daN.m

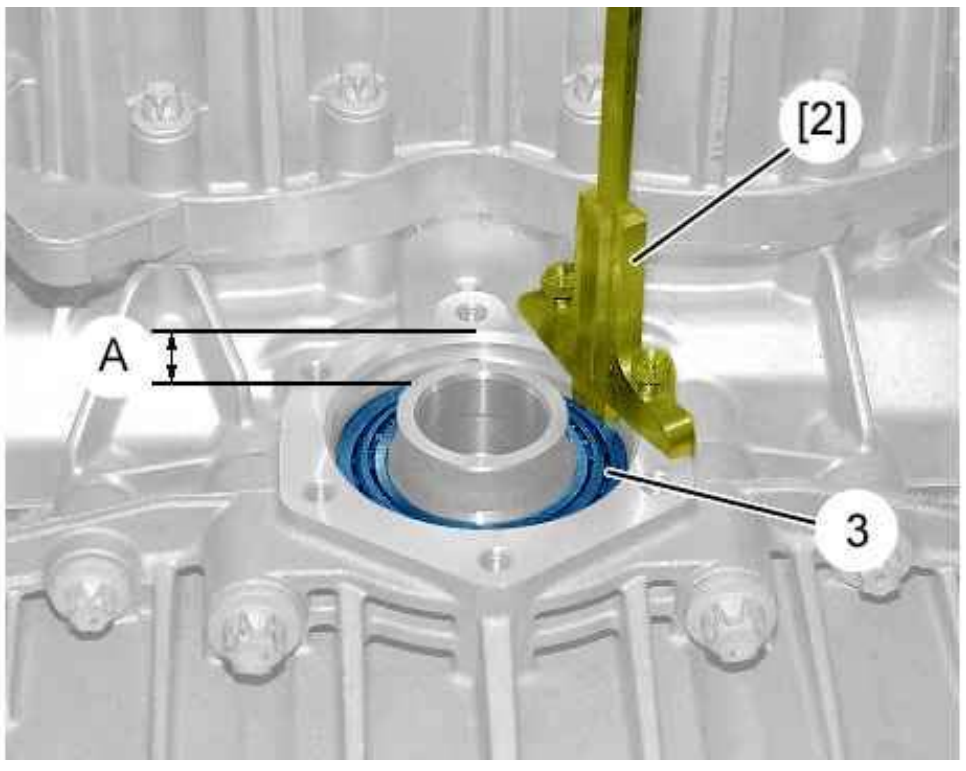

Figure : B2CM0HWD

Compress the outer bearing race (3) (by hand).
Measure the dimension "A" between the seal surface of the casing and the outer bearing race (3) ; Using tool [2].

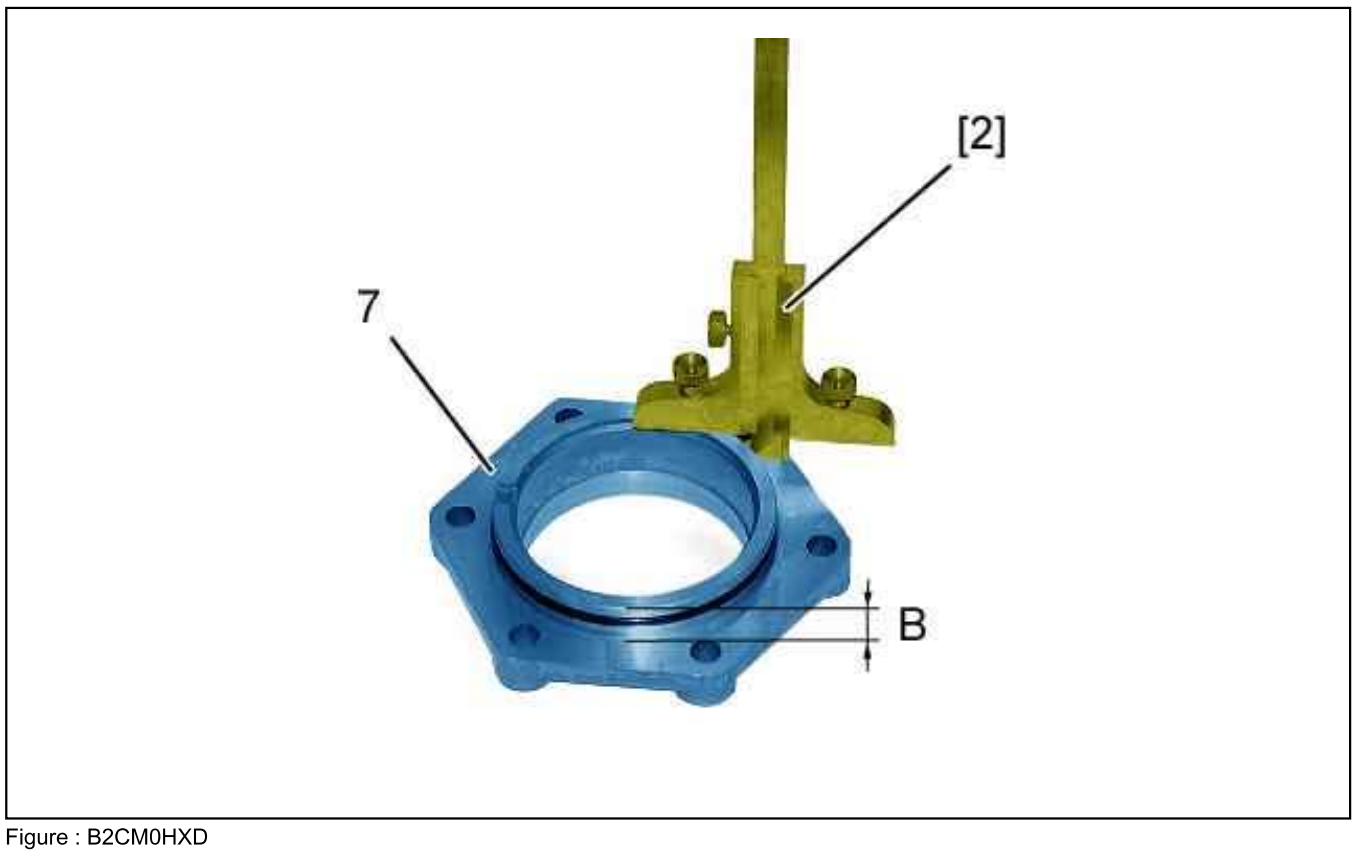

Figure : B2CM0HXD

Measure the dimension "B" of the bearing thrust plate (7) ; Using tool [2].
Calculate the thickness of the adjustment shim ; By means of the following operation : "A" side - "B" + 0,23 side.

N.B. : 0,23 corresponds to the play recommended for the fit and preloading of the differential bearings.

CAUTION : If the value obtained does not correspond to one or several adjustment shims, choose the shim(s) immediately greater.

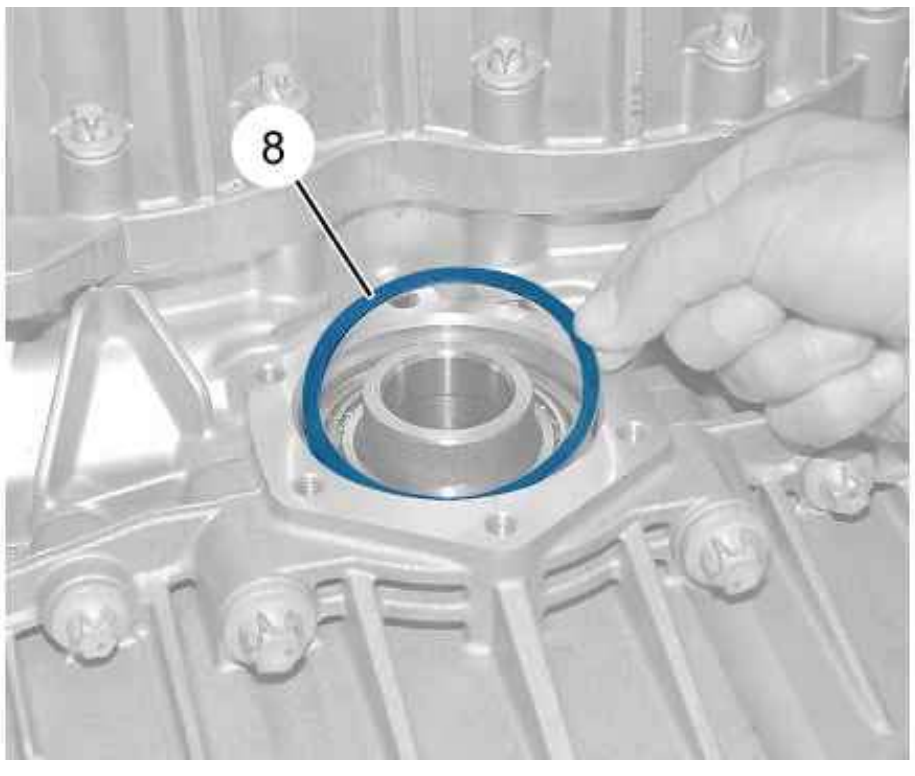

Figure : B2CM0HYD

Fit the adjusting shim (8).

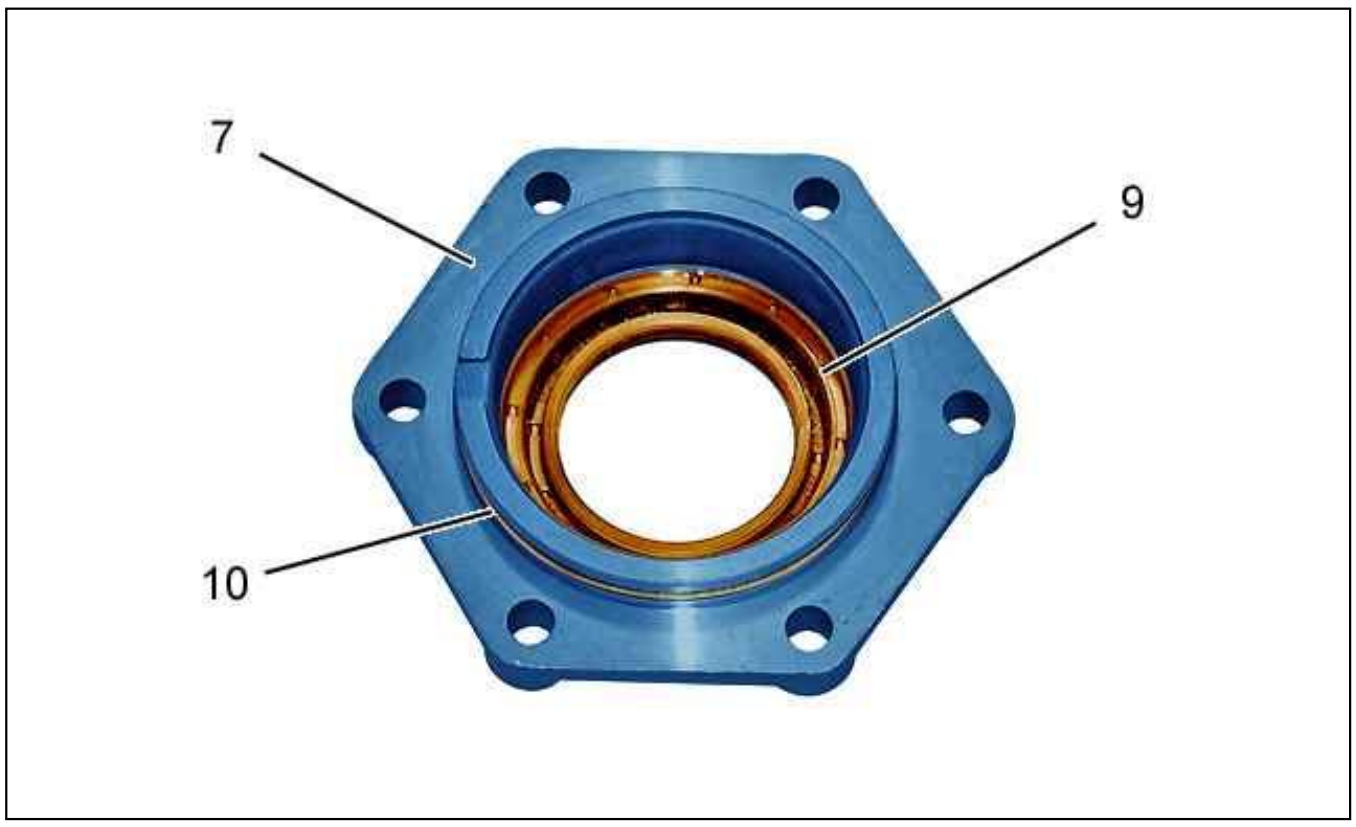

Figure : B2CM0HZD

CAUTION : Always replace : The O-ring seal (10) of the bearing thrust plate (7).

Coat the interval between the lips of the driveshaft seal with grease (L.H. side) (9).
Refit :

- The left-hand driveshaft seal (new) (9) ; Using tool [3]
- The O-ring (new) (10)

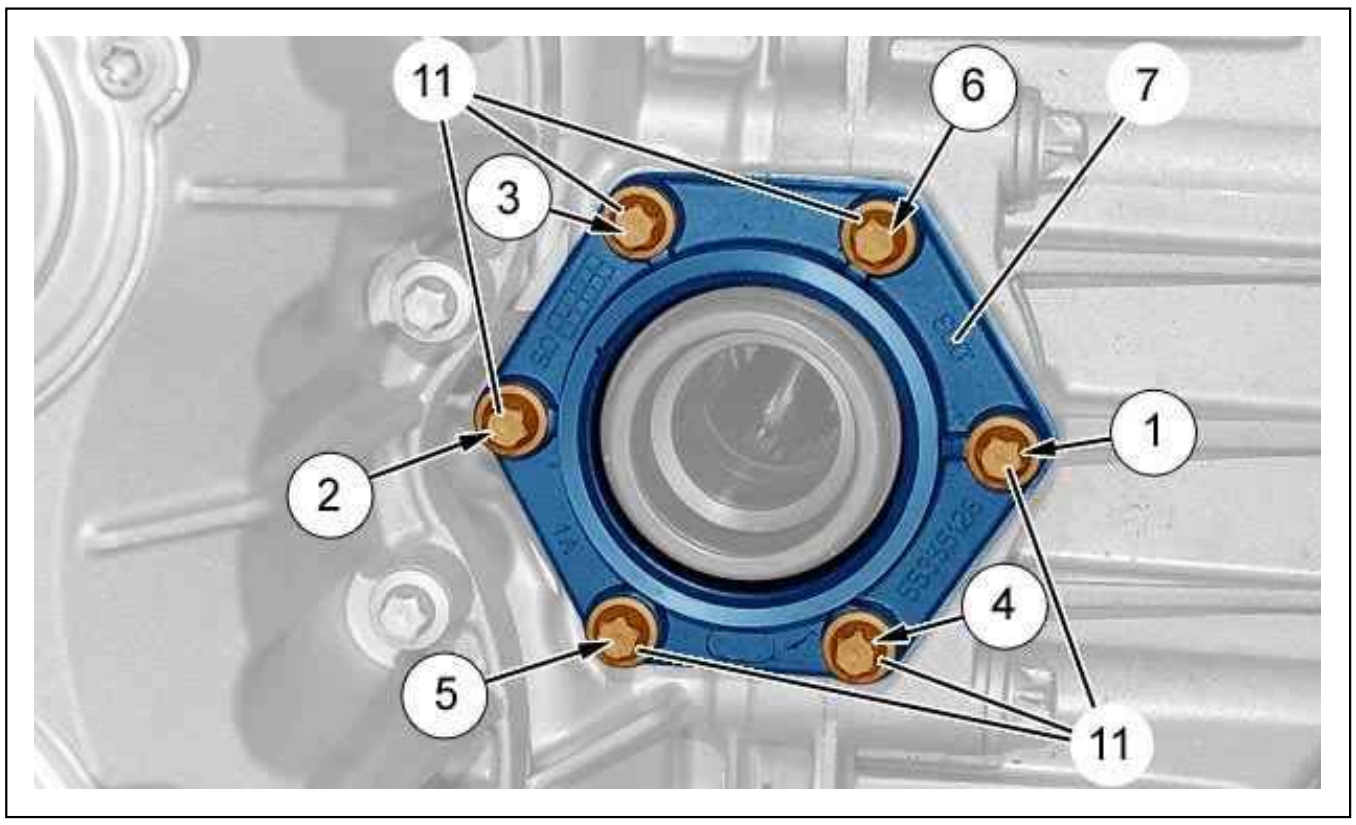

Figure : B2CM0J0D

CAUTION : Follow the tightening sequence (from 1 to 6).

Refit :

- The bearing thrust plate (7)
- The bolts (11) ; Tighten to 2 ± 0,2 daN.m

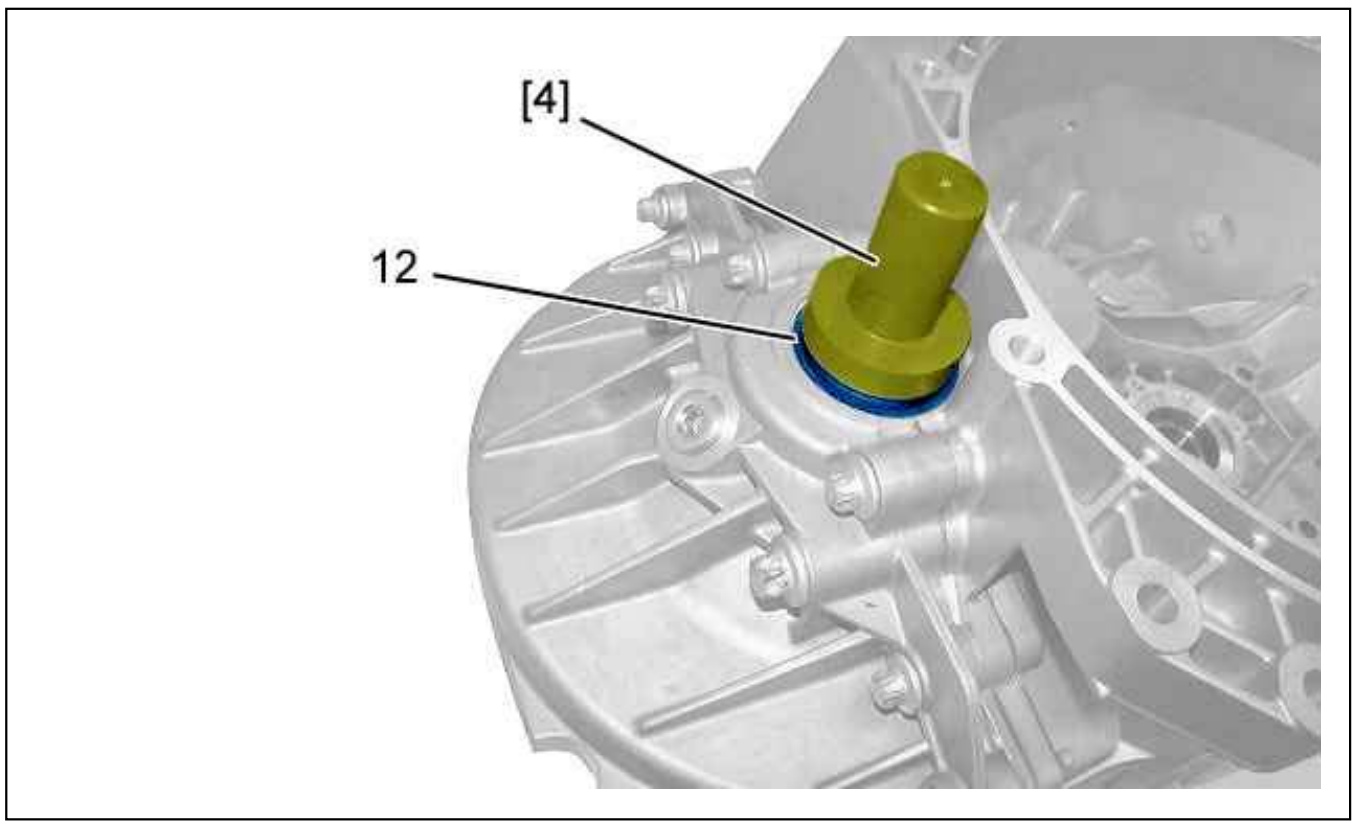

Figure : B2CM0J1D

Refit the driveshaft seal (right) (12) (new) ; Using tool [4].

3. Refitting : input shaft - output shaft

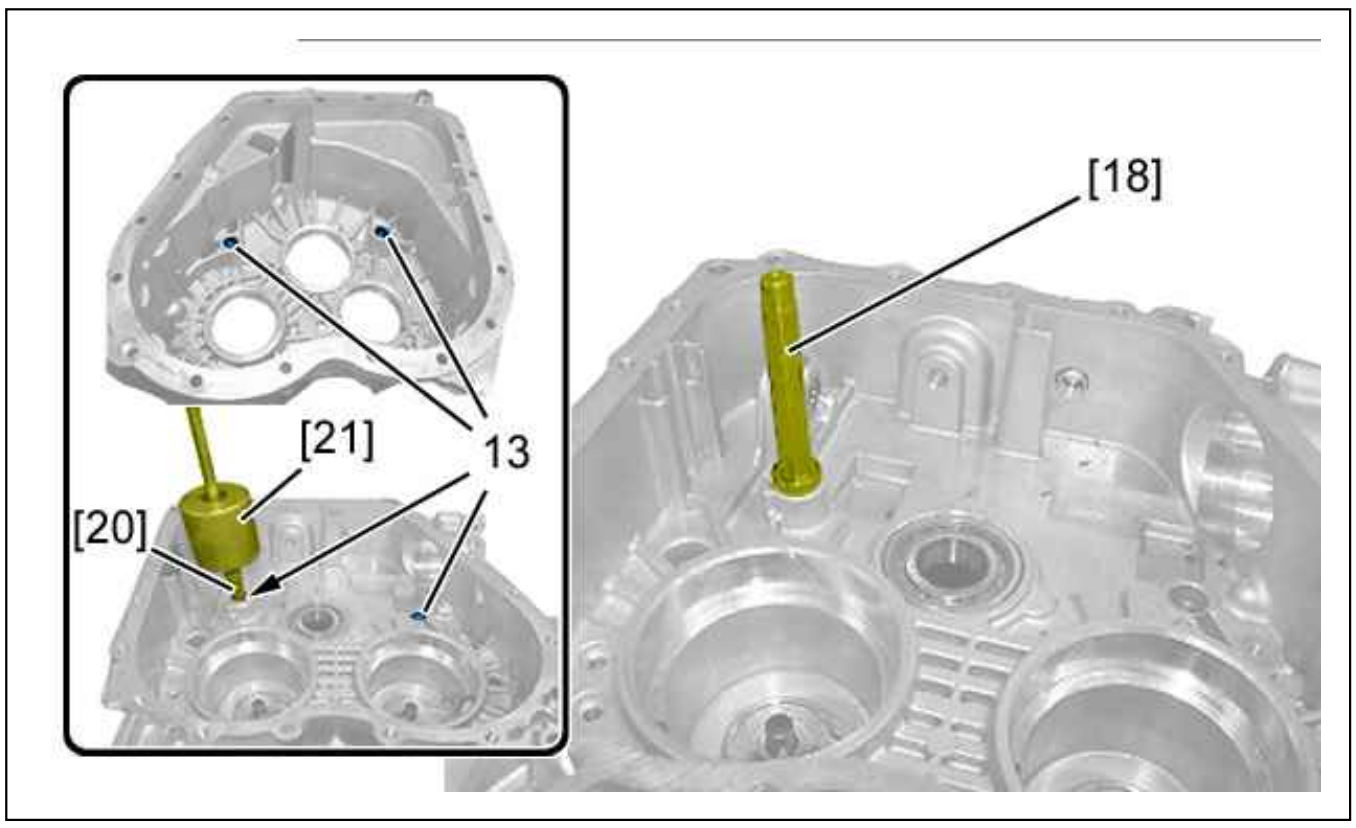

Figure : B2CM0J2D

CAUTION : Always replace : The spacers (/).

Remove : The 4 spacers (13) ; Using the tools [20], [21].

Refit : The 4 spacers (13) ; Using tool [18].

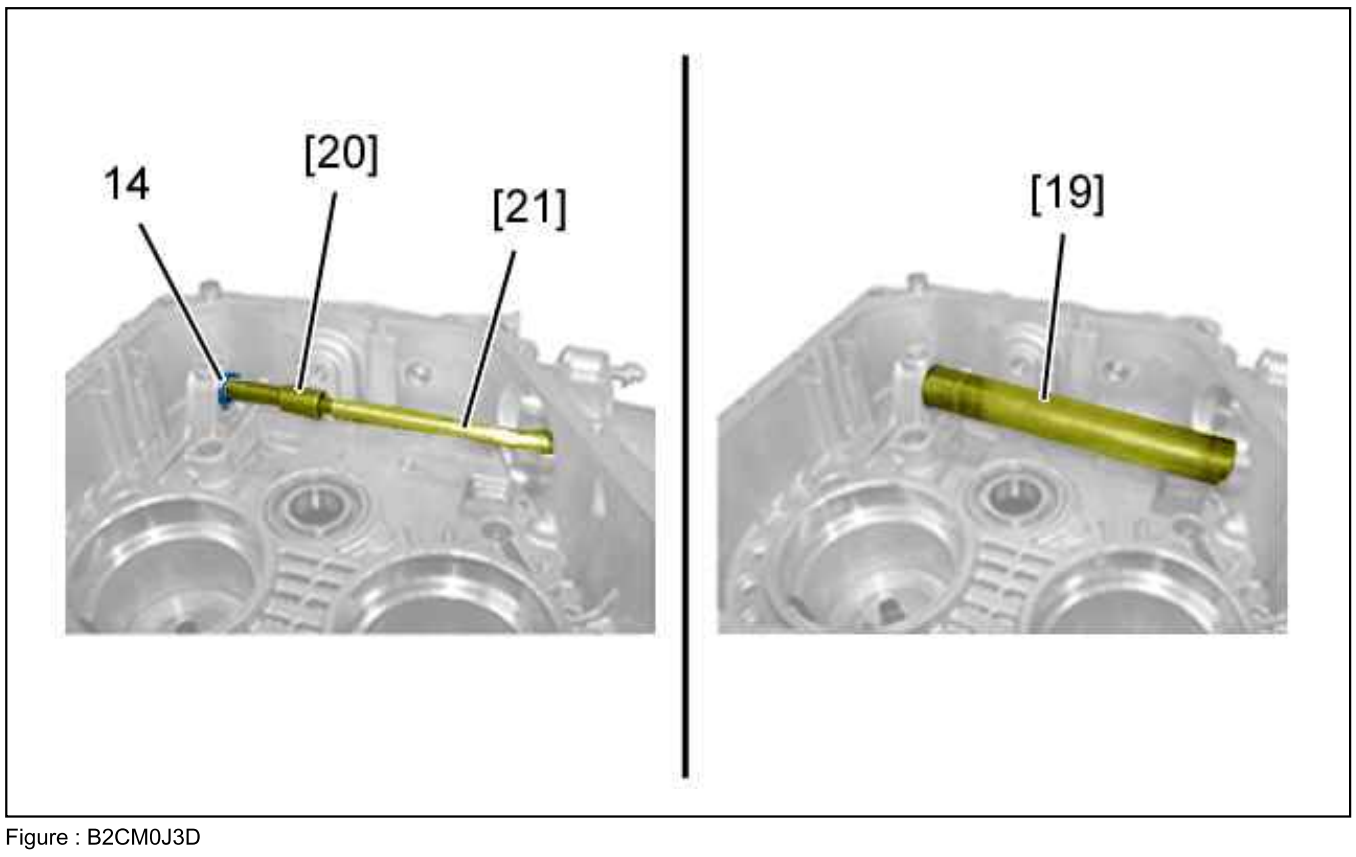

Figure : B2CM0J3D

Check that the bearing (14) turns freely and without tight spots. If this is not the case : Replace the bearing.

CAUTION : For removing, it is necessary to take weight on the inside of the bearing race.

Remove : The gear selector bearing (14) ; Using the tools [20] [21].

CAUTION : The flat part of the bearing race must be oriented towards the tool.

Refit : The gear selector bearing (14) ; Using tool [19].

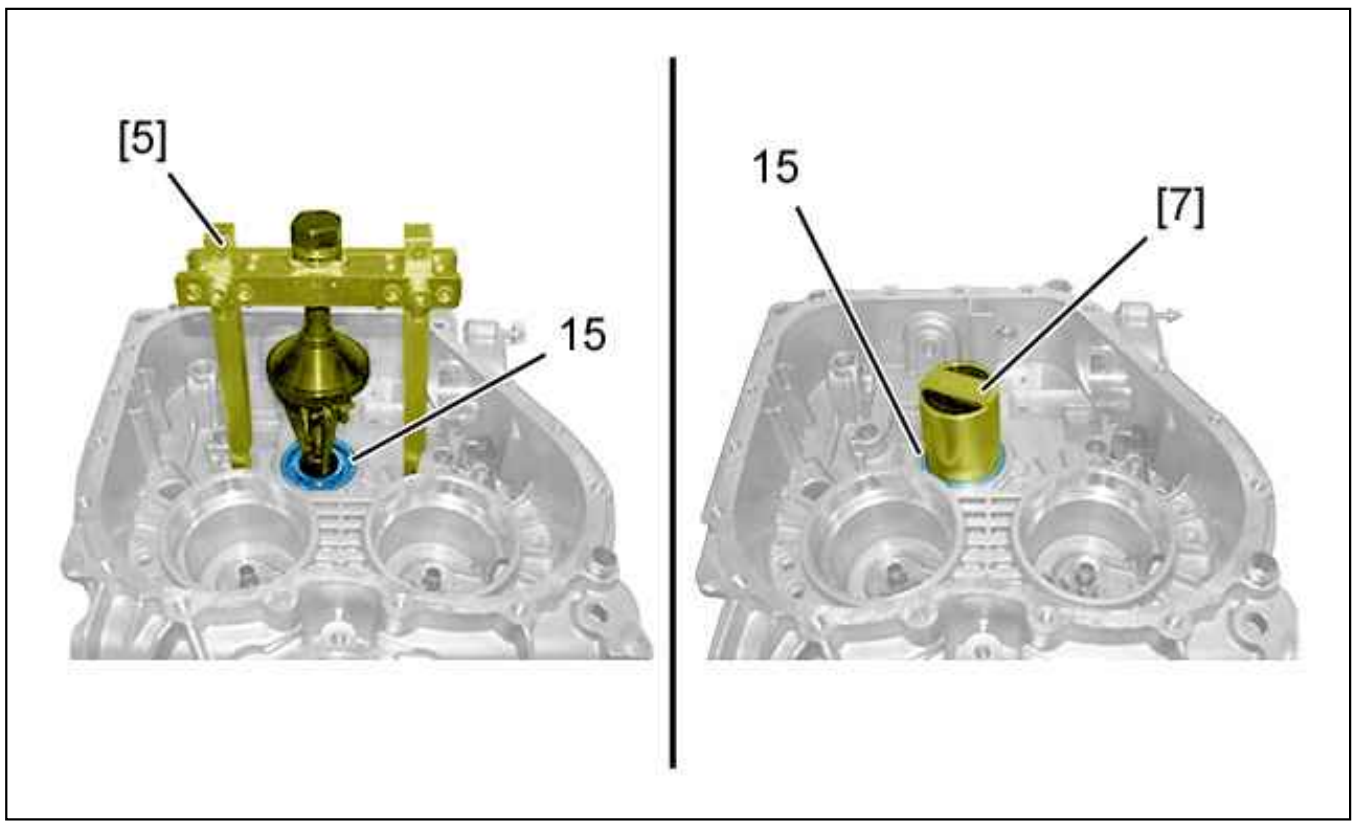

Figure : B2CM0J4D

Check that the primary shaft bearing (15) turns freely and without tight spots. If this is not the case : Replace the bearing.
Extract : The input shaft bearing (15) ; Using tool [5].
Refit : The input shaft bearing (15) ; Using tool [7].

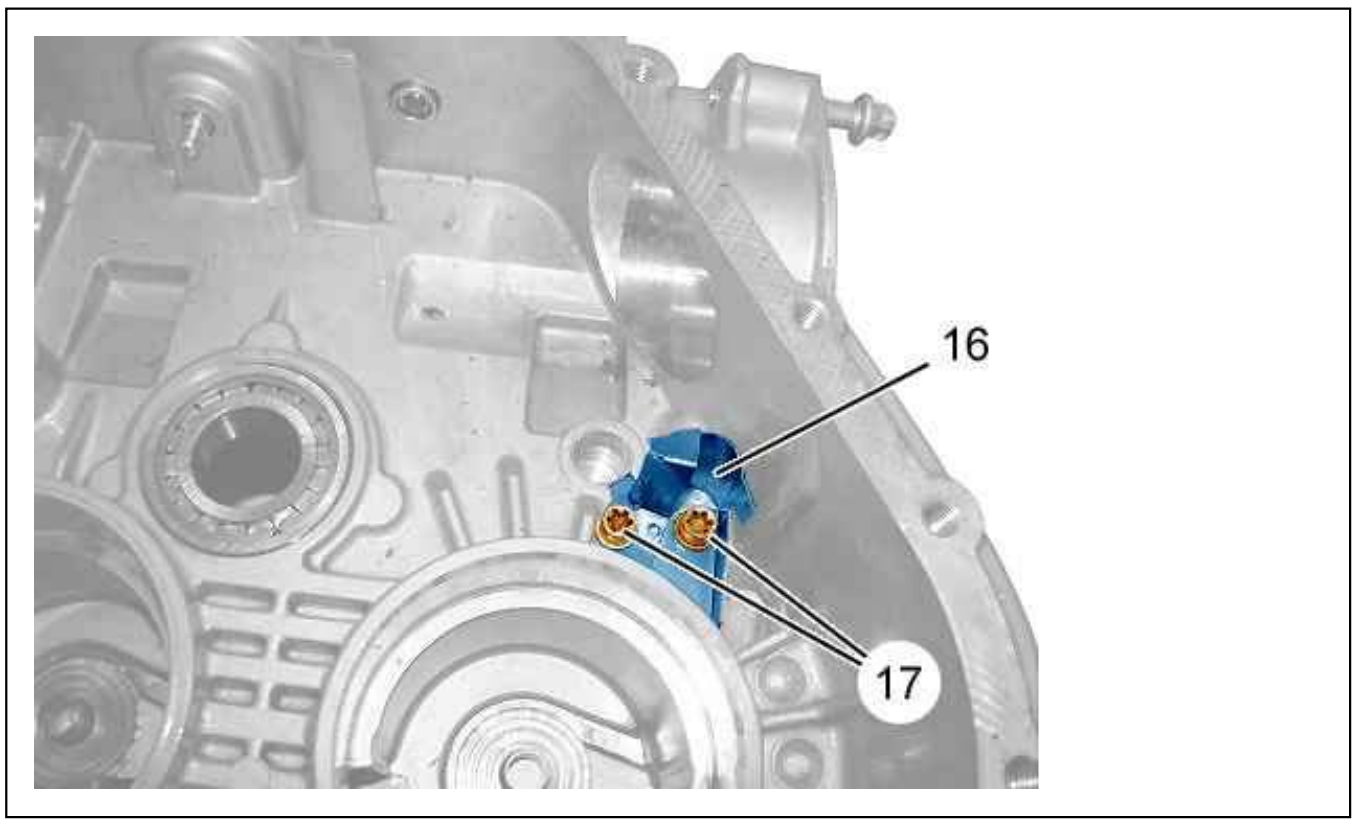

Figure : B2CM0J5D

Refit :

- The oil deflector (16)
- The bolts (17) ; Tighten to 0,9 ± 0,1 daN.m

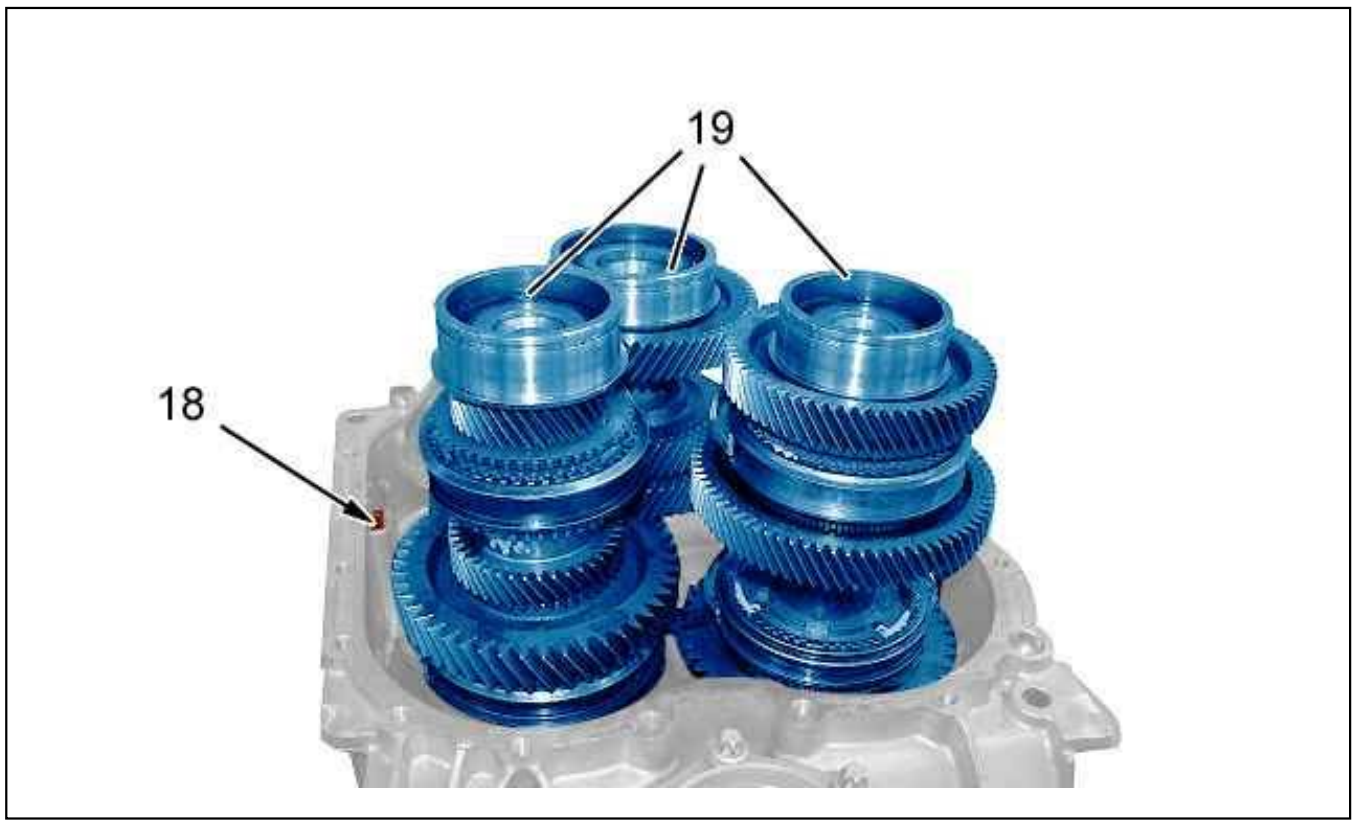

Figure : B2CM0J6D

CAUTION : Respect the following sequence for refitting : Lower output shaft - input shaft - Upper output shaft.

Refit :

- The primary shaft, secondary shafts and forks assembly (19)
- The magnet (18)

4. Refitting : gearbox casing

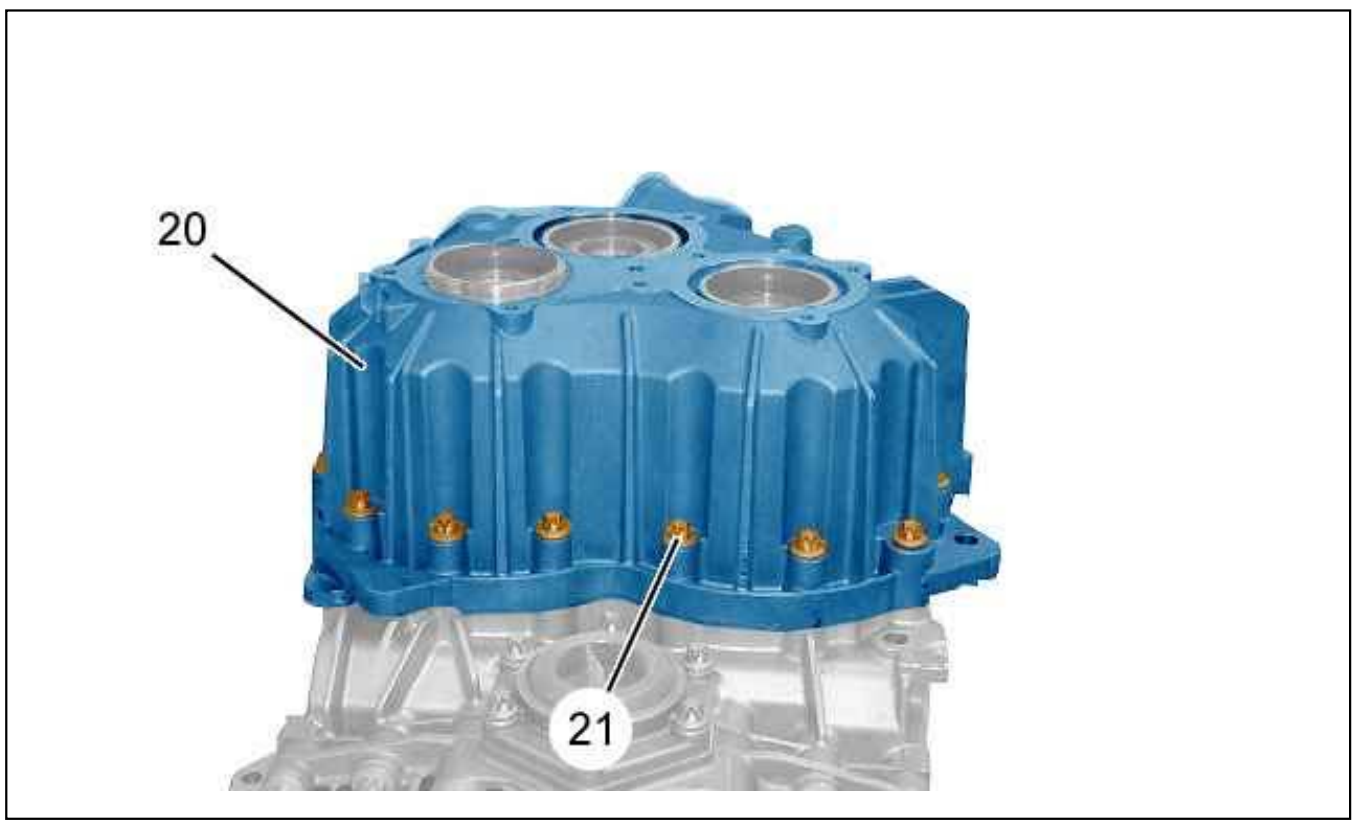

Figure : B2CM0J7D

Check that the locating dowels are in place.
Coat the joint face with a thin, even layer of sealing paste "E10" (Refer to the method : Recommended consumables (Mechanical).
Refit :

- The gearbox casing (20) ; Using tool [1] (if necessary)
- The bolts (21)

Tightening method for the screws (21) :

- Pre-tightening to 1,1 ± 0,1 daN.m
- Tightening to 2,2 ± 0,2 daN.m
- Angular tightening to 30° ± 5° ; Using tool [11]

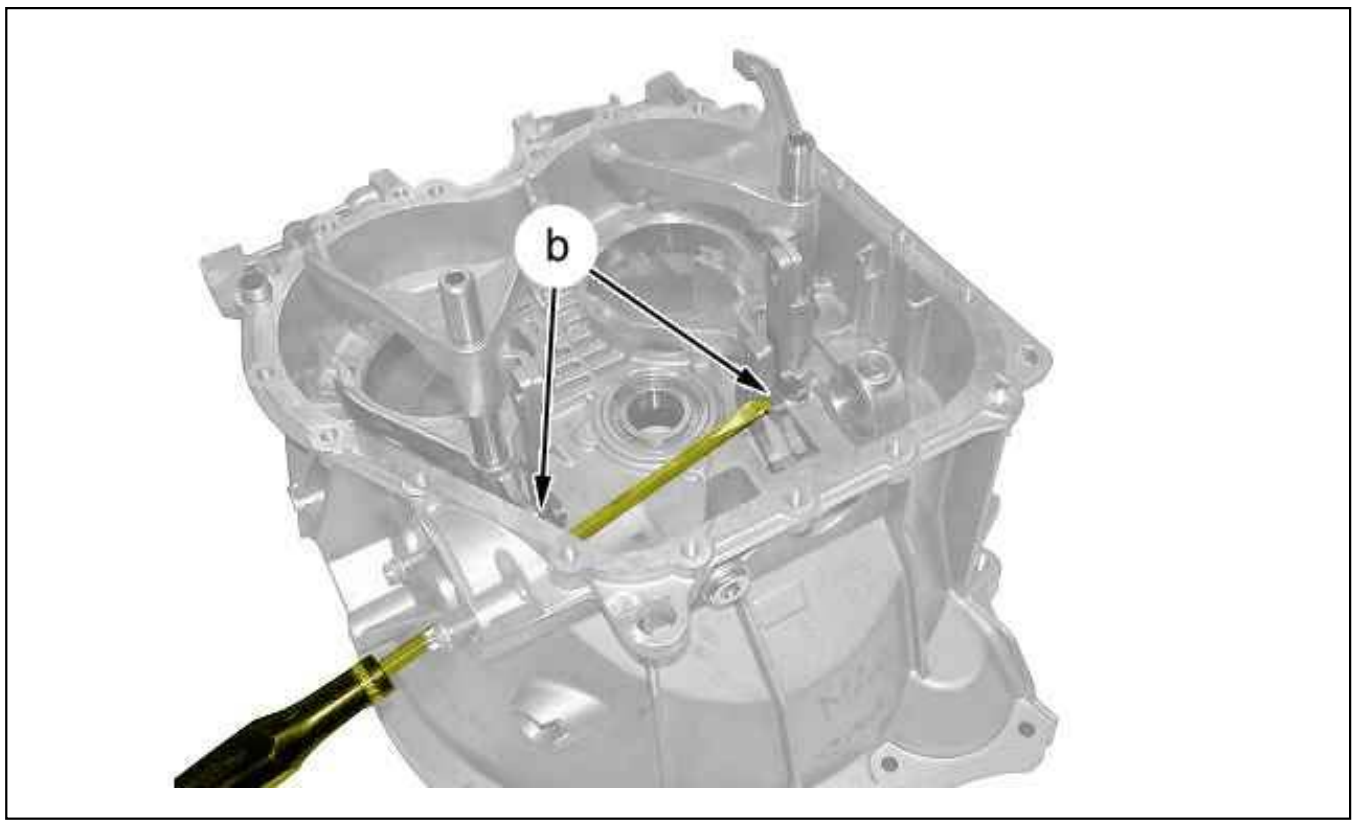

Figure : B2CM0J8D

CAUTION : The simultaneous engagement of two gears locks the input shaft, this operation is essential in order to be able to release the gearbox shafts tightening bolts.

Act on the selection forks to engage 2 gears (as "b") ; By means of a screwdriver.

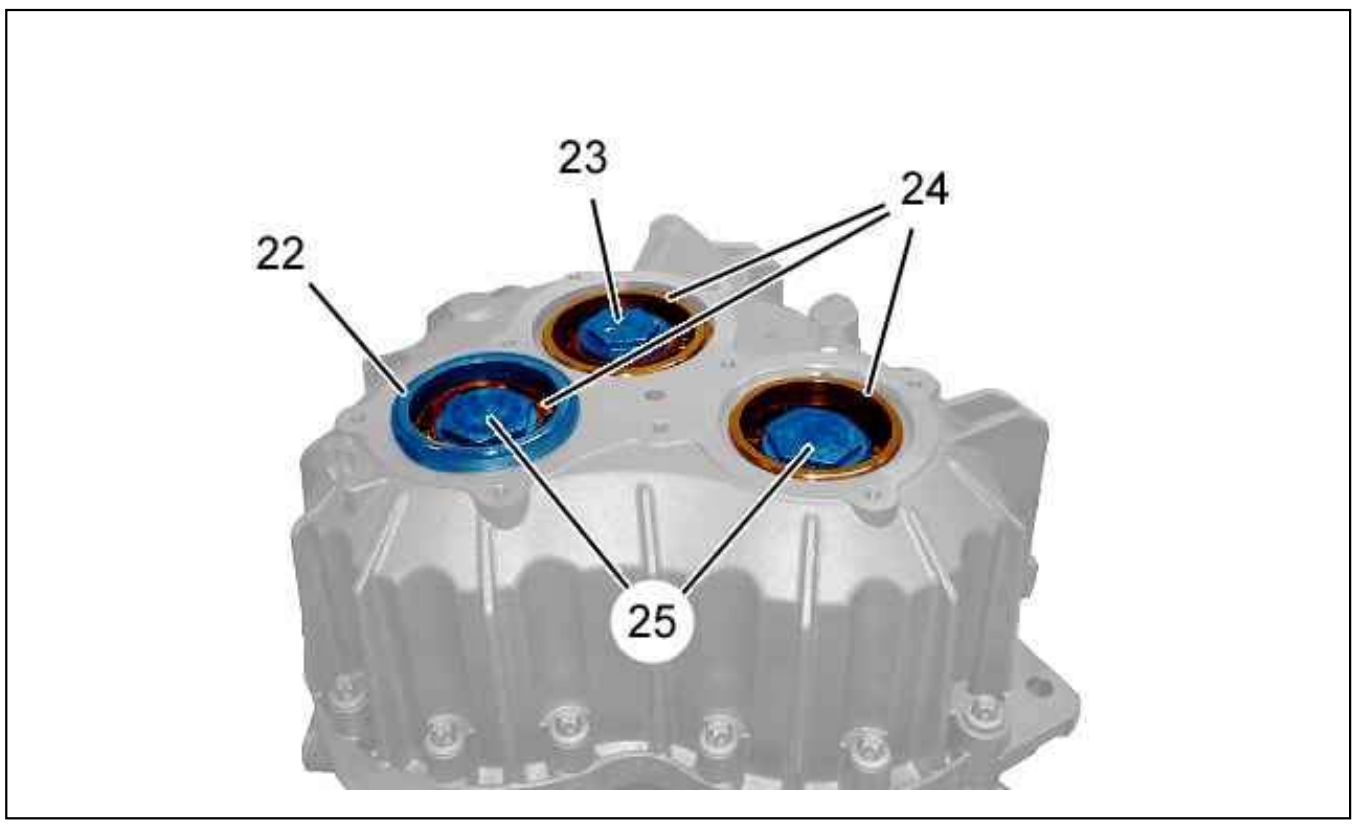

Figure : B2CM0J9D

Refit :

- The circlips (24)
- The adjusting shim (22)

Refit the bolts (23), (25) ; Tightening to 20 ± 2 daN.m.
Position the selection forks in the neutral position.

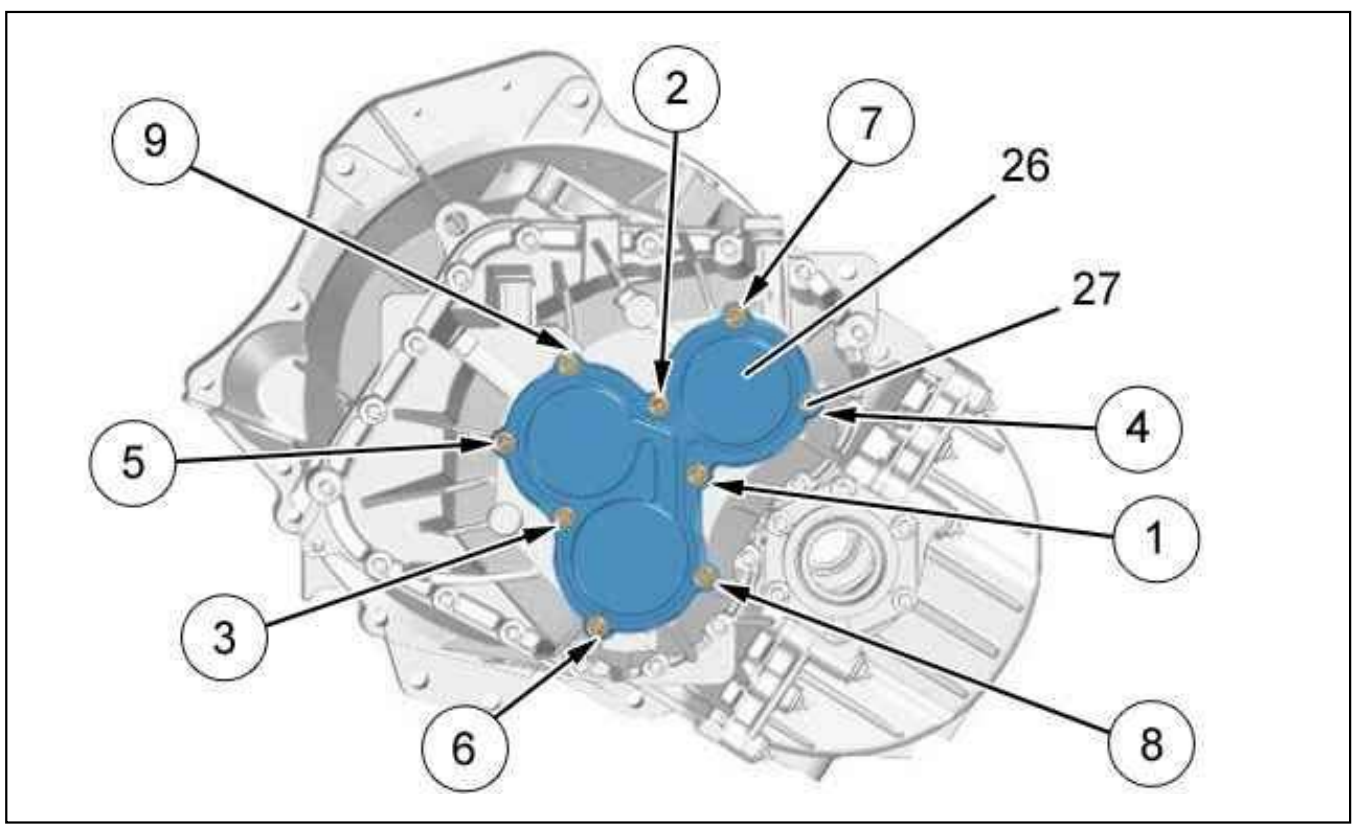

Figure : B2CM0JAD

CAUTION : Follow the tightening sequence (from 1 to 9).

Refit : :

- The gearbox casing (26)
- The bolts (27) ; Tightening to 1 ± 0,1 daN.m

5. Refitting : Gear selection mechanism

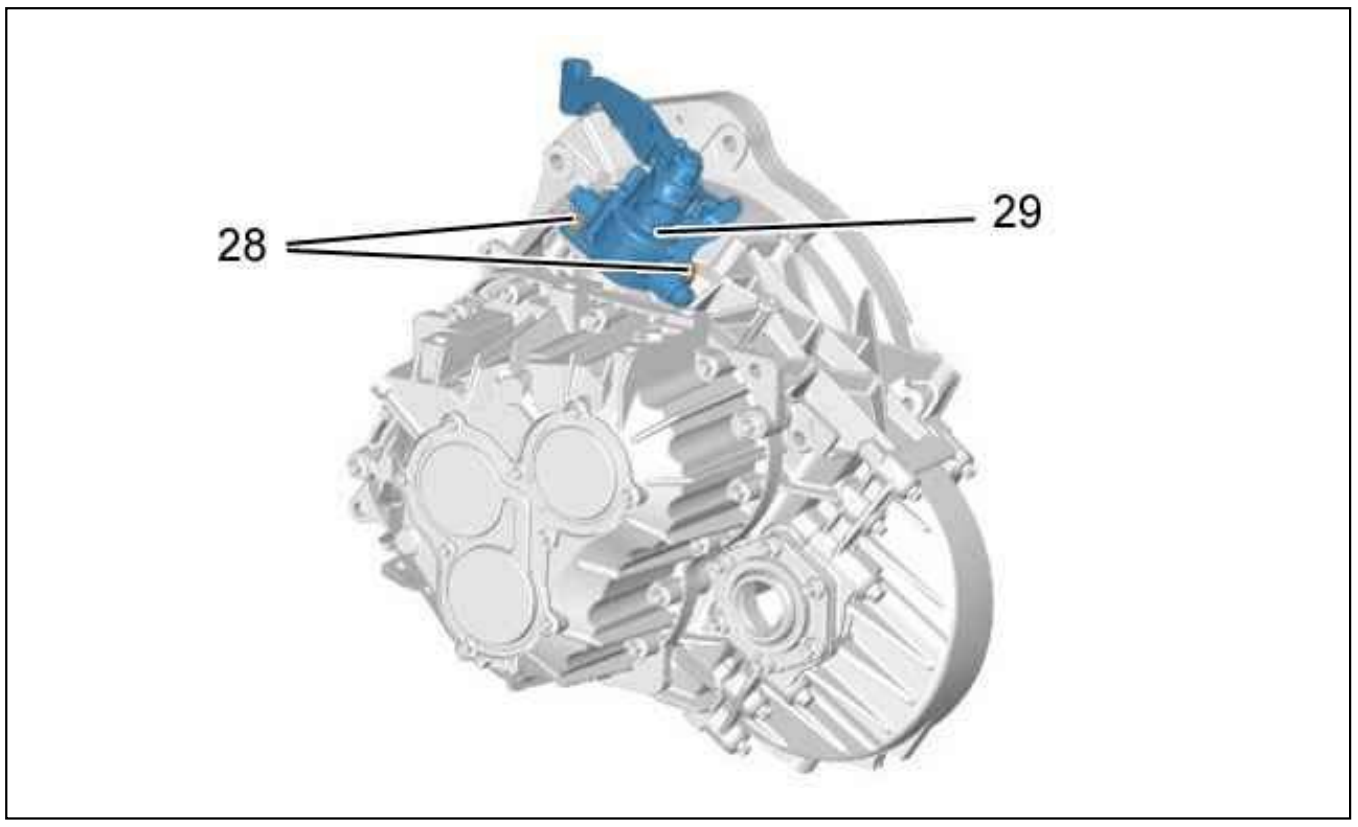

Figure : B2CM0JBD

CAUTION : Check that the gear selection mechanism (29) is in the neutral position.

Refit : :

- The gear selection mechanism (29)
- The bolts (28) ; Tighten to 2 ± 0,2 daN.m

REMOVING - REFITTING : GEARBOX CONTROLS

ESSENTIAL : Observe the safety and cleanliness recommendations .

1. Tooling

tool	Reference	Designation
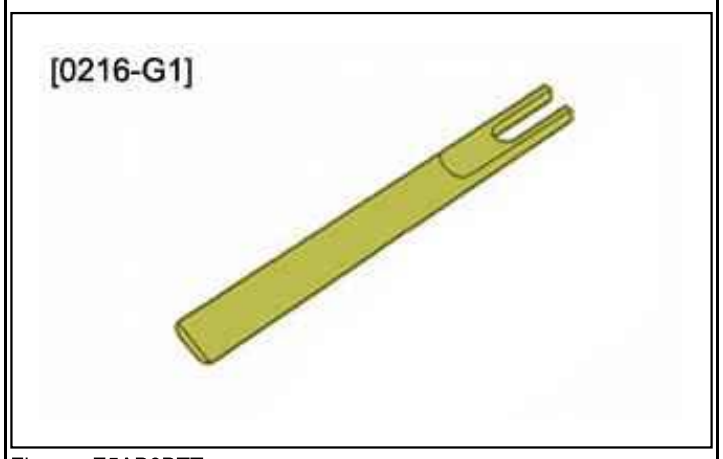 Figure : E5AB0BTT	[0216-G1]	tool for unclipping Ø 10 mm ball-joints
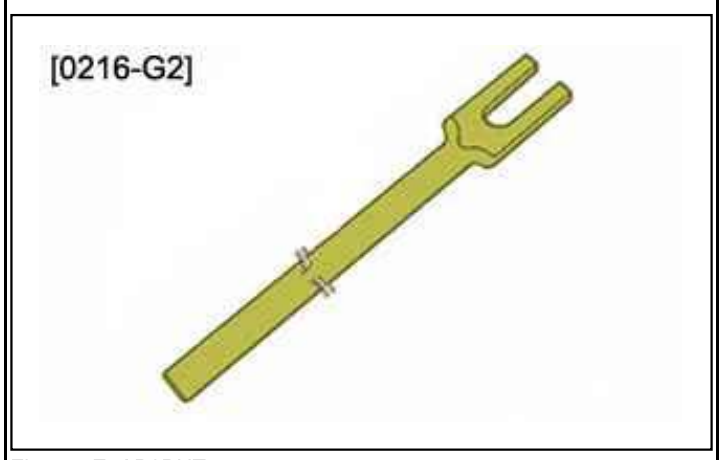 Figure : E5AB0BUT	[0216-G2]	tool for unclipping Ø 13 mm ball-joints

2. Removing

Disconnect the ancillaries battery.
Remove the air filter housing .
Place the vehicle on a 2-post lift.
Lift and support the vehicle.

2.1. Under the vehicle

The gears are selected by means of cables :

- Gear selection control cable
- Gear engagement control cable

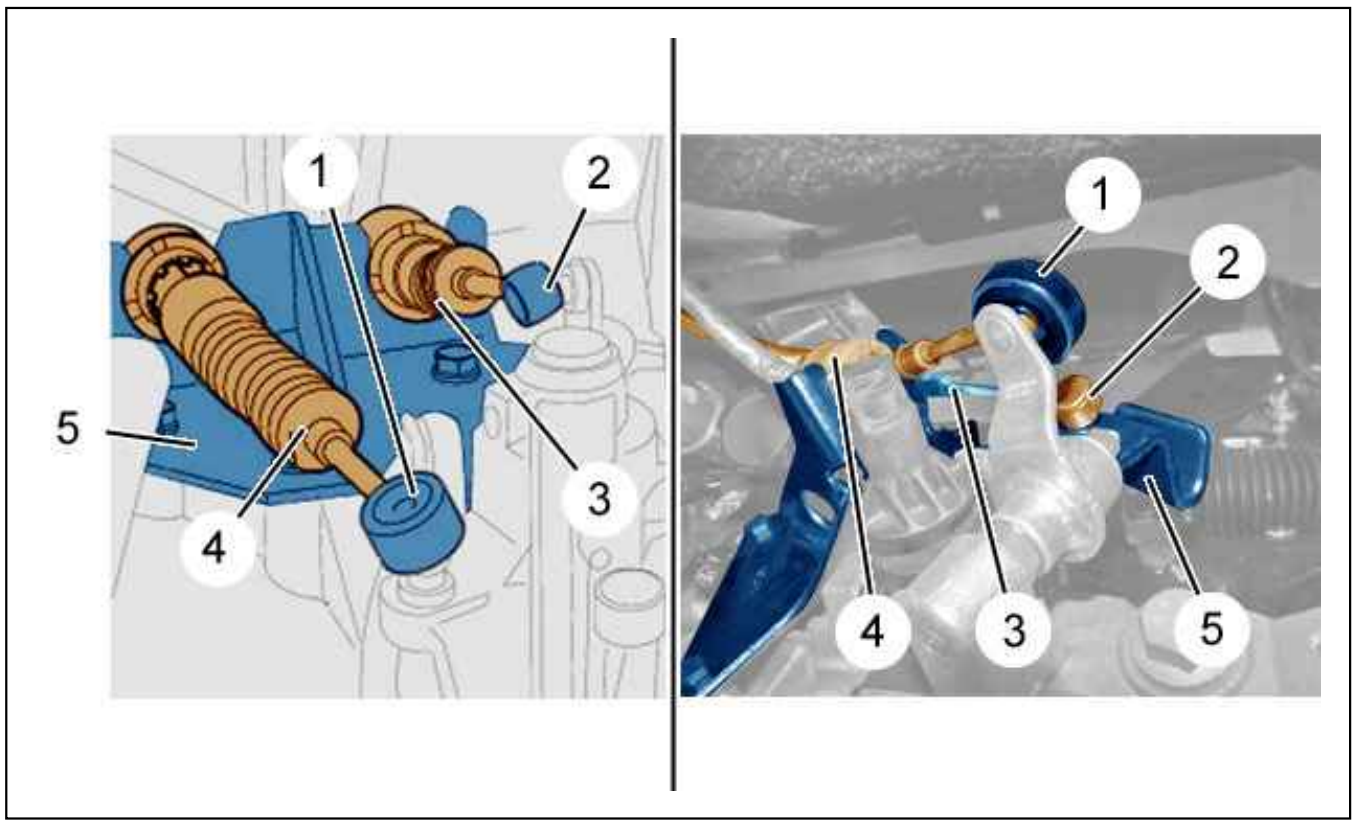

Figure : B2CG2EFD

Uncouple (according to equipment) :

- The ball joint (1) ; Using tool [0216-G1]
- The ball joint (2) ; Using tool [0216-G2]

Remove the cable stops from the bracket (5).
Disengage the gear selection and engagement control cables (3), (4) from the support (5).

2.2. In the vehicle

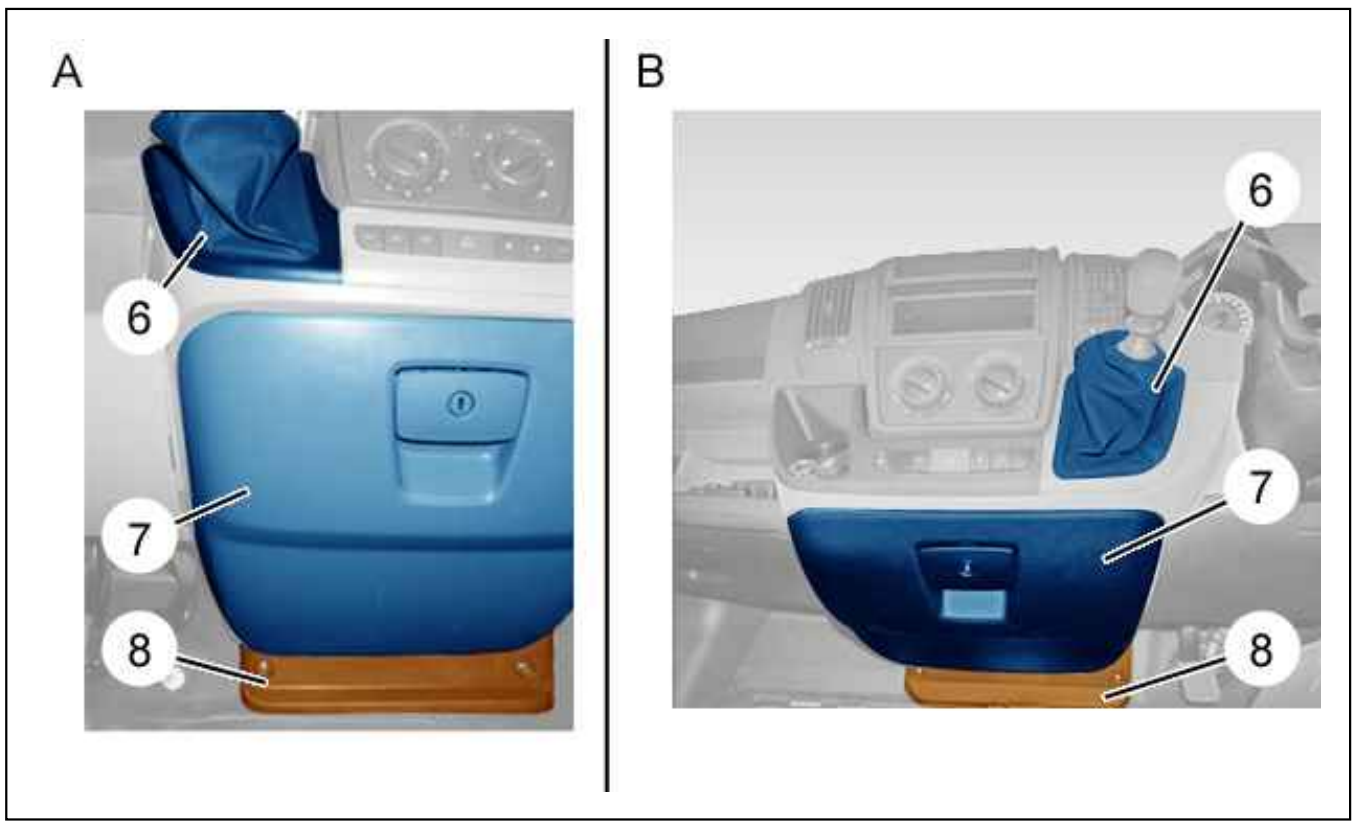

Figure : B2CG2EGD

"A" : left-hand drive.
"B" : right-hand drive.
Remove :

- The gear lever gaiter (6)
- The central glovebox assembly (7)
- The central glovebox lower trim (8)

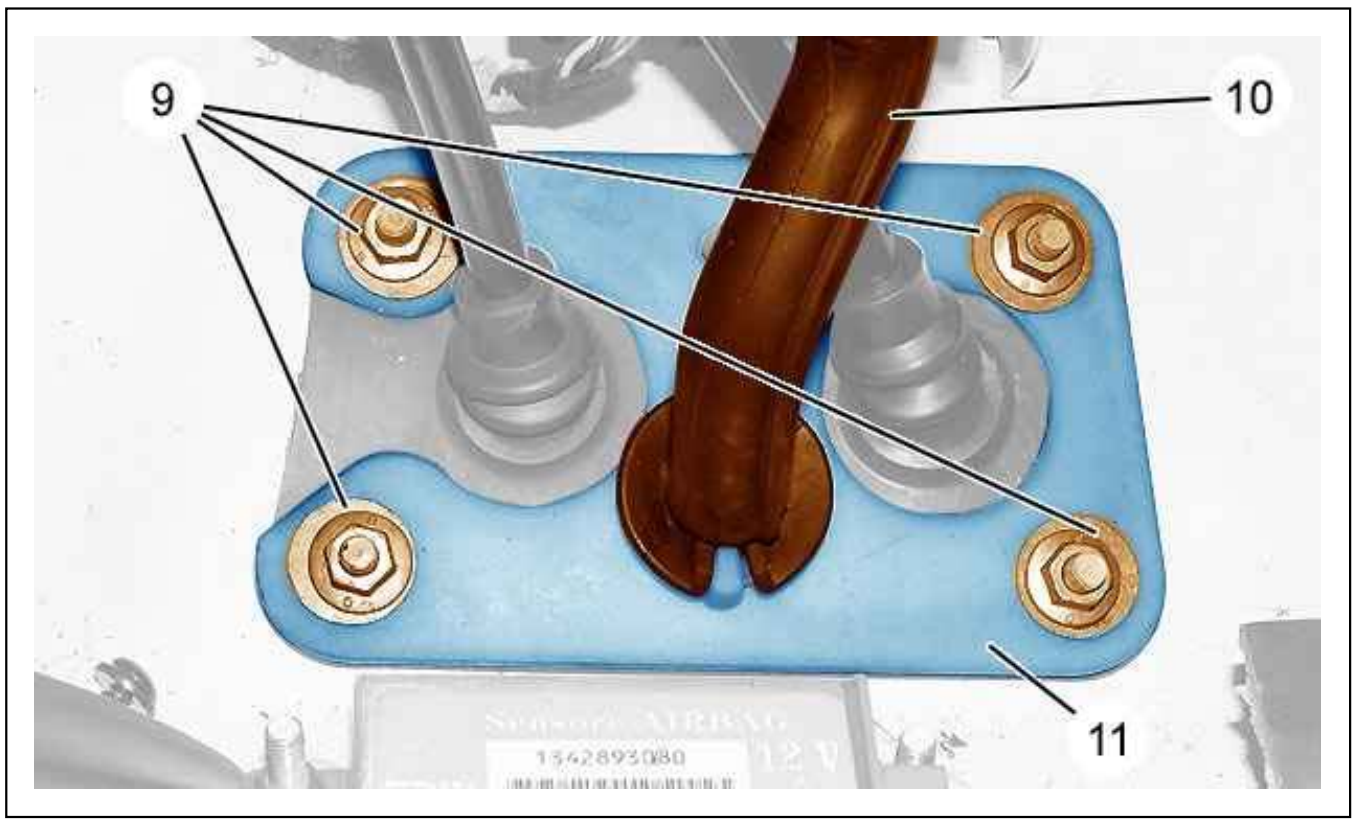

Figure : B2CP497D

Remove :

- The evaporator condensation discharge pipe (10) (according to equipment)
- The nuts (9)
- The assembly of the fixing plate (11) with the gear selection and engagement control cables (3), (4)

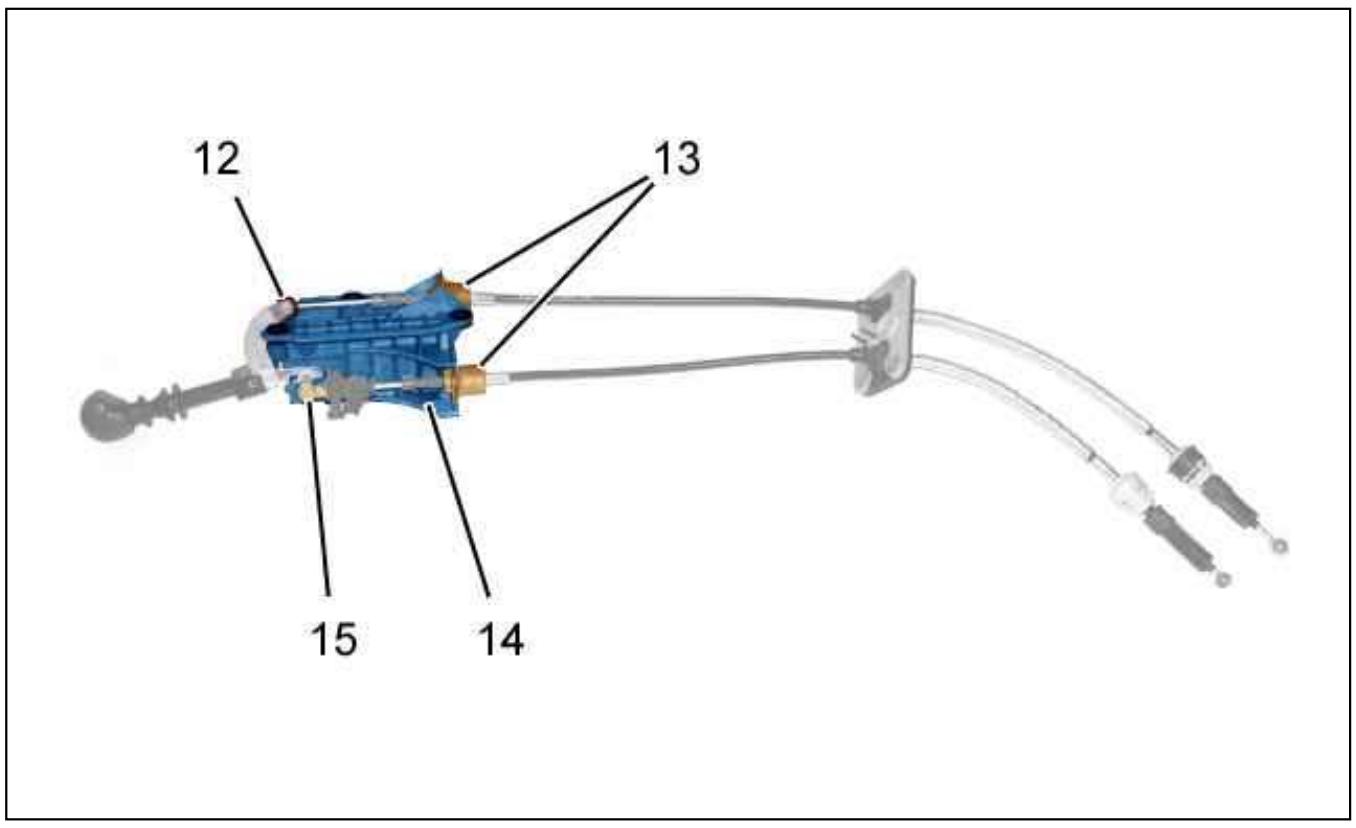

Figure : B2CP498D

Remove the fixing screws of the mounting (14).
Uncouple :

- The ball joint (12) ; Using tool [0216-G2]
- The ball joint (15) ; Using tool [0216-G1]

Remove :

- The cable stops (13)
- Gear selection and engagement control cables (3), (4)
- The bracket (14)

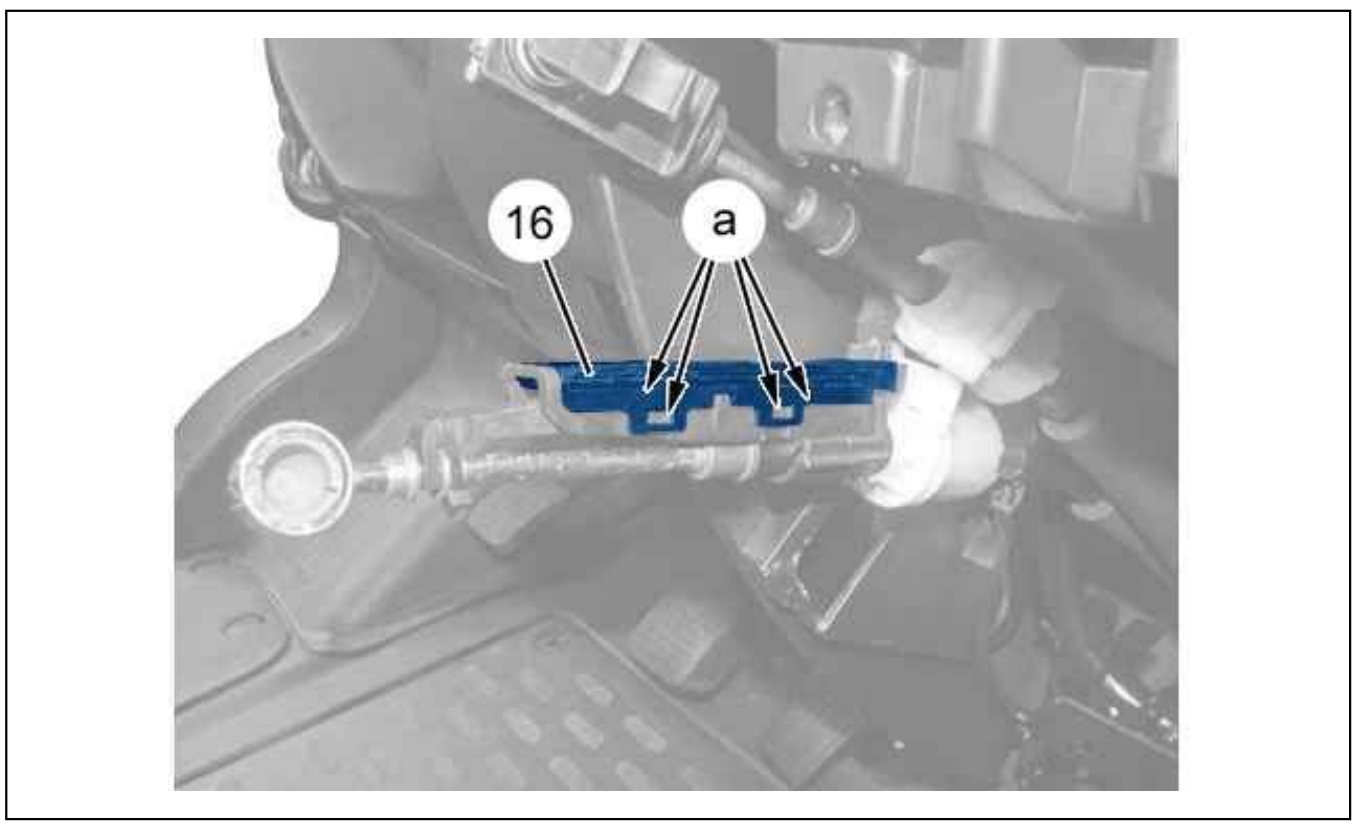

Figure : B2CG2PRD

Unclip and remove the gear control top dead centre sensor (16) (at "a") (according to equipment).

3. Refitting

3.1. In the vehicle

Refit :

- Gear selection and engagement control cables (3), (4)
- The fixing plate assembly (11)
- The nuts (9)
- The evaporator condensation discharge pipe (10) (according to equipment)
- The gear control top dead centre sensor (16) (at "a") (according to equipment)
- The bracket (14)
- The sleeve stops (13)
- The ball-joints (12), (15)
- The fixing screws of the mounting (14)
- The central glovebox lower trim (8)

3.2. Under the vehicle

Refit :

- The sleeve stops on the support (5)
- The ball-joints (1), (2)

Adjust the gear controls.

4. Gearbox controls adjustment

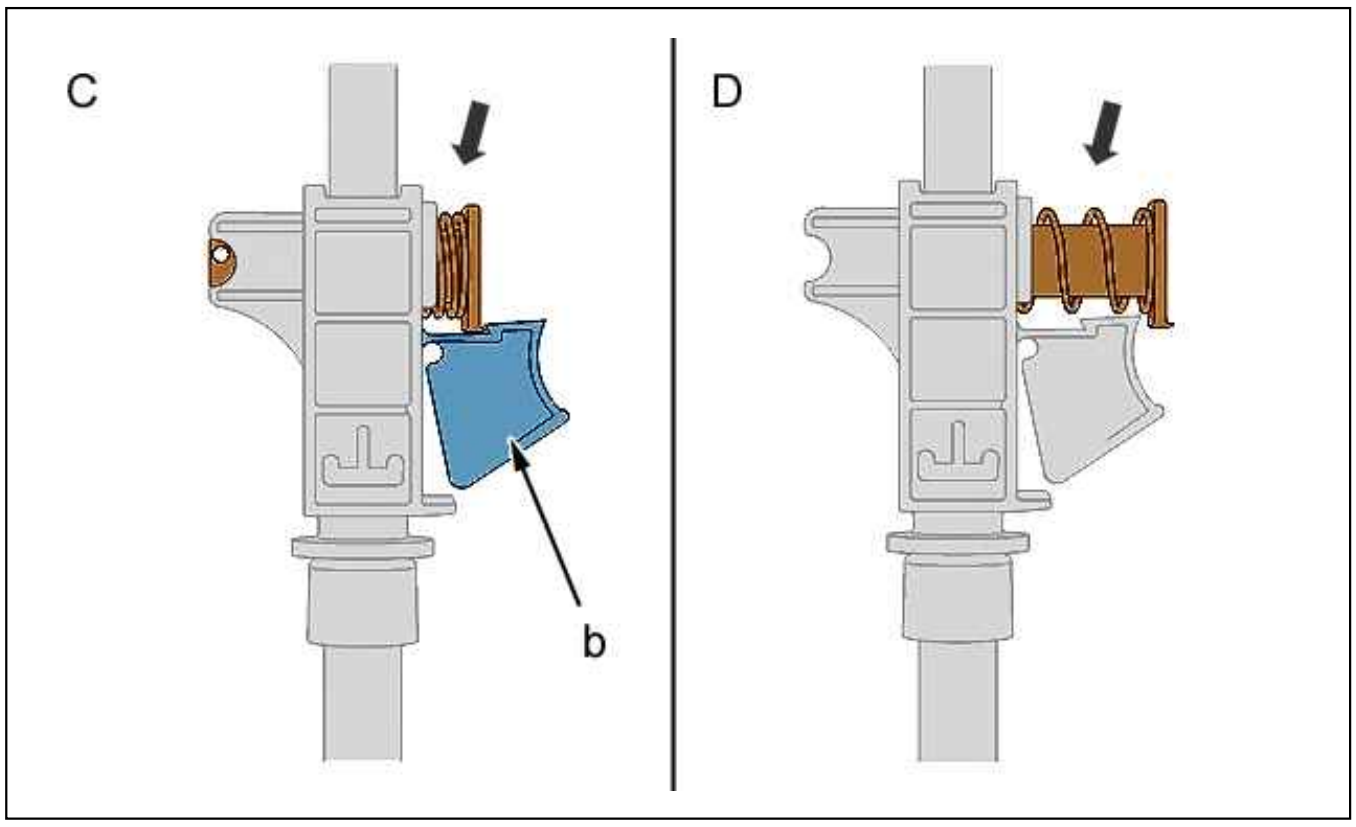

Figure : B2CG2PSD

"b" : Button for locking or unlocking the automatic adjustment mechanism.
Device for automatic adjustment of the gear selection control cable :

- "C" : Unlocked position
- "D" : Locked position

N.B. : Before making the adjustment, check that the automatic adjustment device remains in its correct position "C".

Place the gear lever in the first gear position.

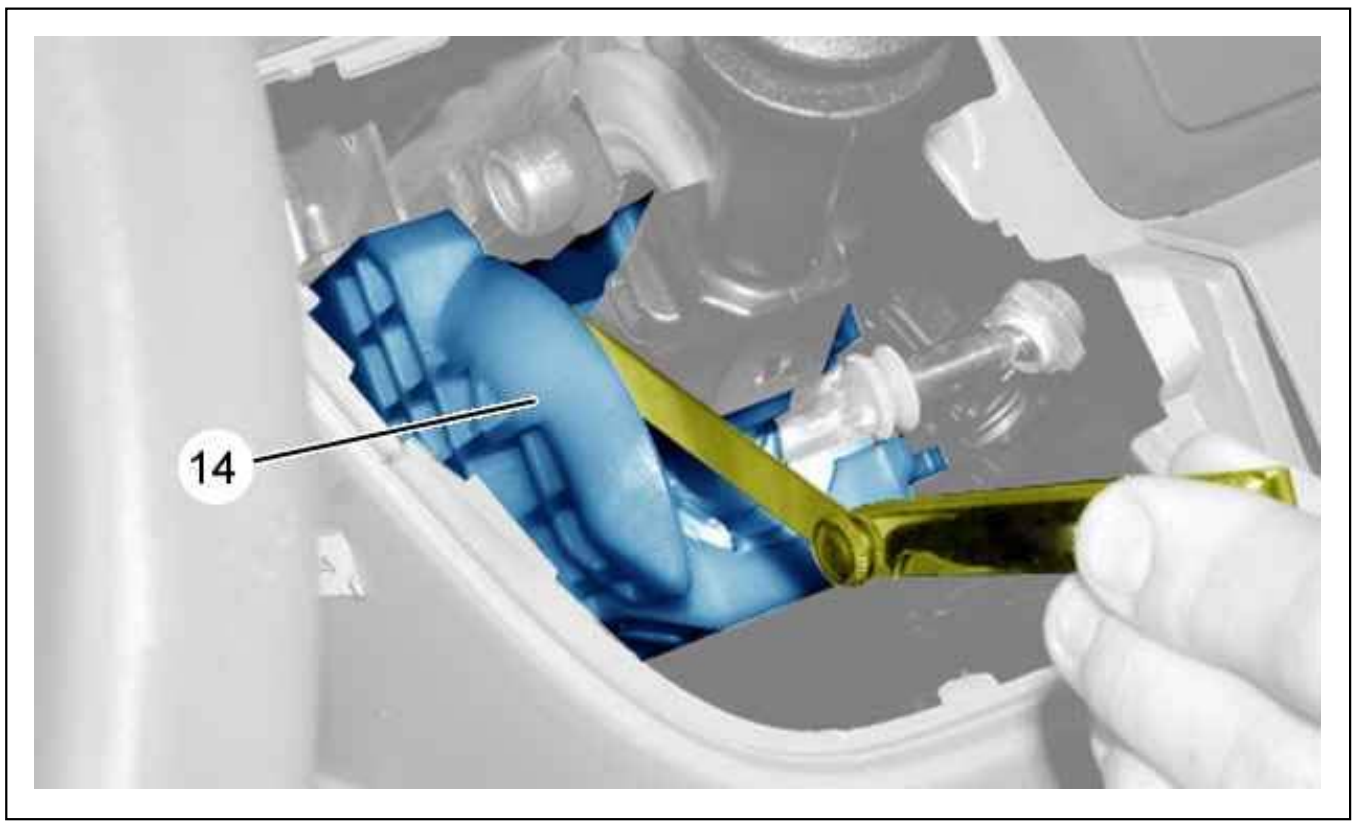

Figure : B2CG2EHD

Insert a 1 mm shim between the gear lever and the mounting (14).
Press button " b " to move the automatic adjustment device to position (D).

N.B. : The length of the gear selection control cable is adjusted.

5. Subsequent operations

Refit :

- The central glovebox assembly (7)
- The gear lever gaiter (6)
- The air filter casing

CAUTION : Perform the operations that are required following a reconnection of the ancillaries battery.

Reconnect the ancillaries battery.
Carry out a road test, changing through all the gears to make sure there is no fault.

REMOVING - REFITTING : GEARBOX

ESSENTIAL : Observe the safety and cleanliness recommendations .

1. Tooling

Equipment : workshop hoist.

2. Removing

Remove :

- The power unit assembly
- The starter motor

Move aside the electrical harnesses attached to the gearbox.
Disconnect the connector from the reverse gear switch .

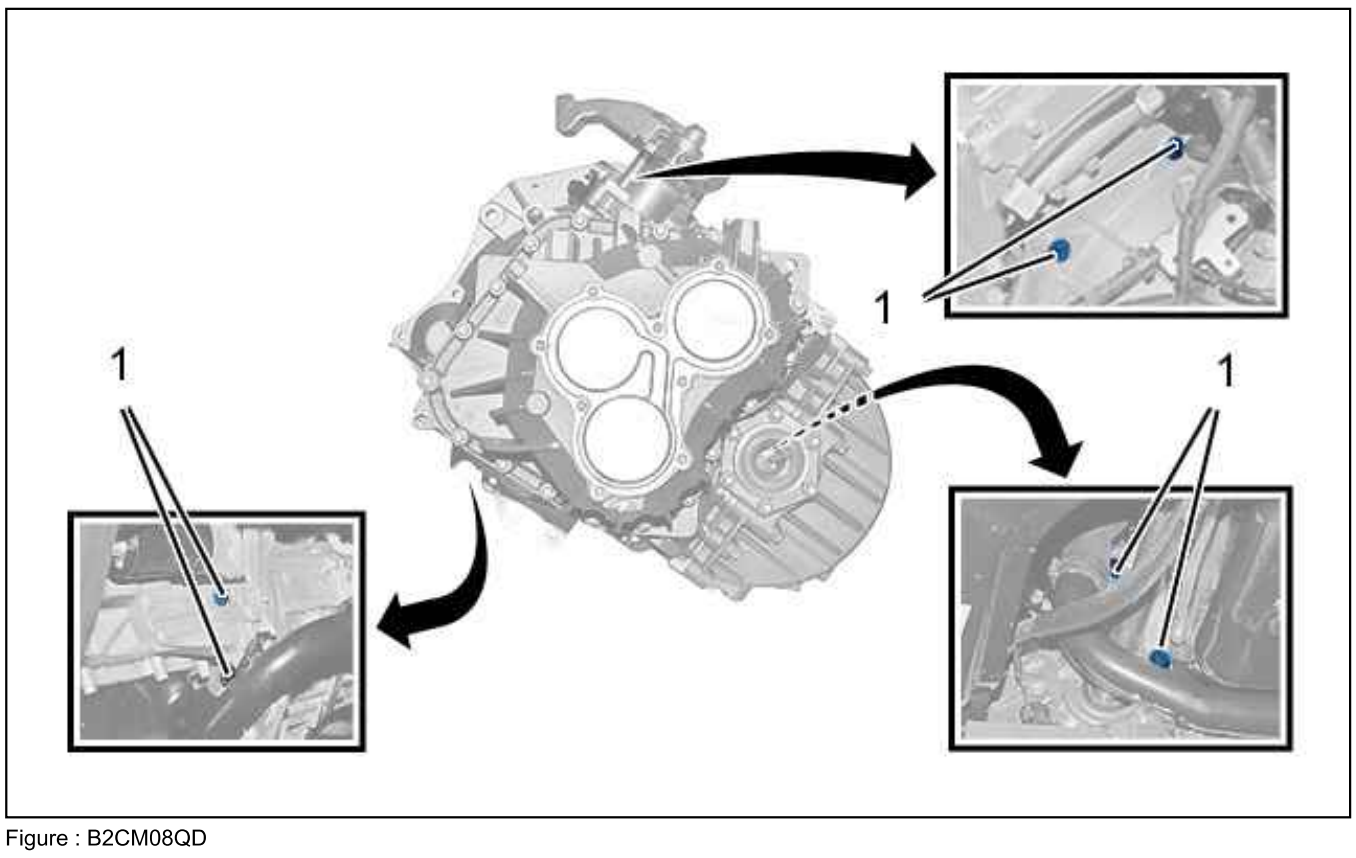

Figure : B2CM08QD

Sling the gearbox ; Using a workshop crane.
Remove :

- The 6 bolts (1)
- The gearbox

3. Refitting

CAUTION : Adhere to the tightening torques .

CAUTION : Replace the driveshaft lip seals .

Check for the absence of leaks on the following components :

- Hydraulic clutch stop
- Crankshaft seal
- Input shaft outlet seal

Check the state of wear of the clutch.
Replace the clutch (If necessary).
Clean the input shaft and the stop guide by hand using a wire brush to eliminate any traces of oxidation.
Protect the interior of the clutch housing from splashes of grease.

N.B. : Apply KLUBERPASTE 46MR401 grease evenly to the input shaft.

Remove the surplus grease on the top of the grooves and the end of the input shaft using a cloth.

N.B. : An excess of grease will contaminate the clutch friction plate and cause noise in neutral, slipping or juddering of the clutch.

CAUTION : If the clutch disc is reused, the disc hub must be free of traces of oxidation.

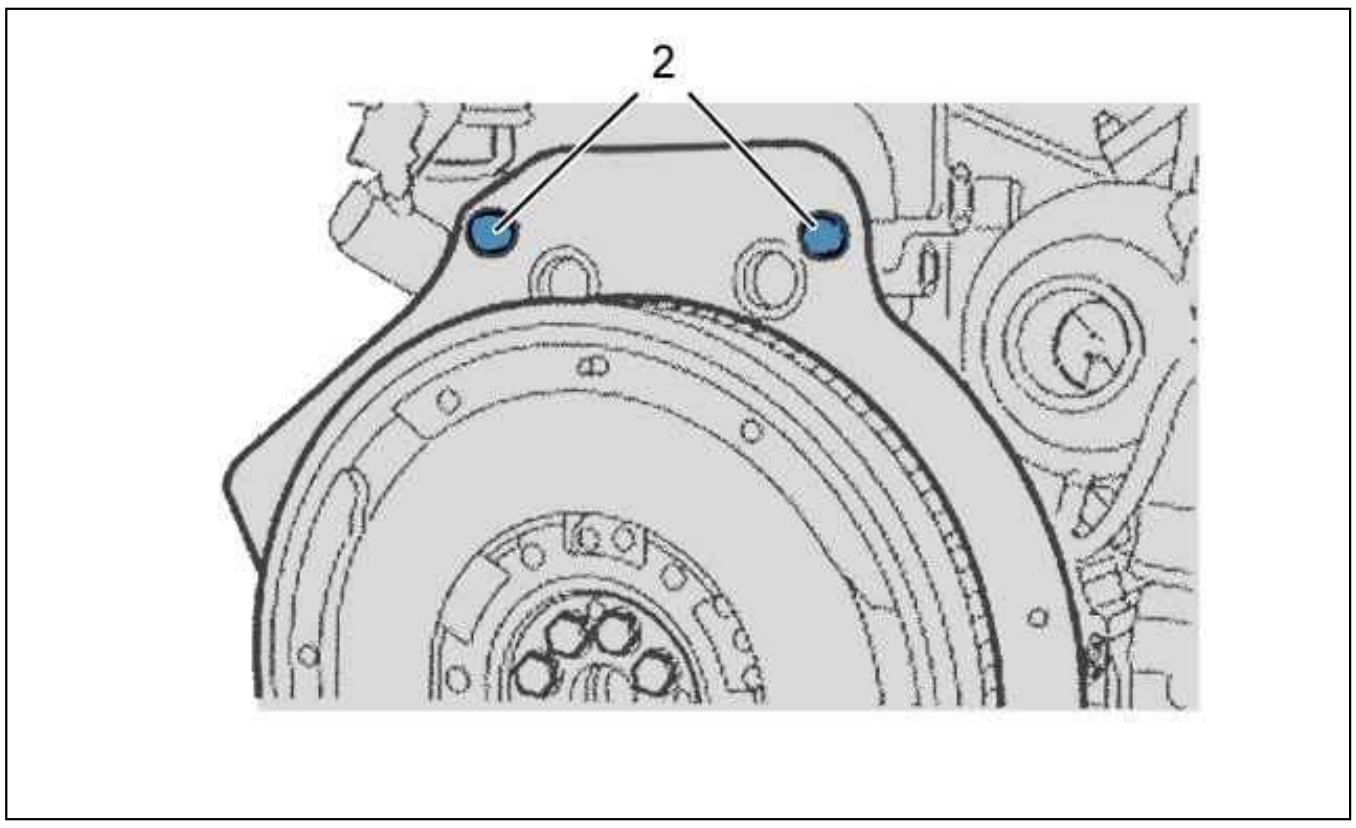

Figure : B2CG2Q4D

CAUTION : Check the presence of the pins (2) for centring the gearbox on the engine.

Attach the gearbox to the engine.

CAUTION : Align the gearbox perfectly on the engine, do not damage the centring pins (2) when coupling the engine and gearbox.

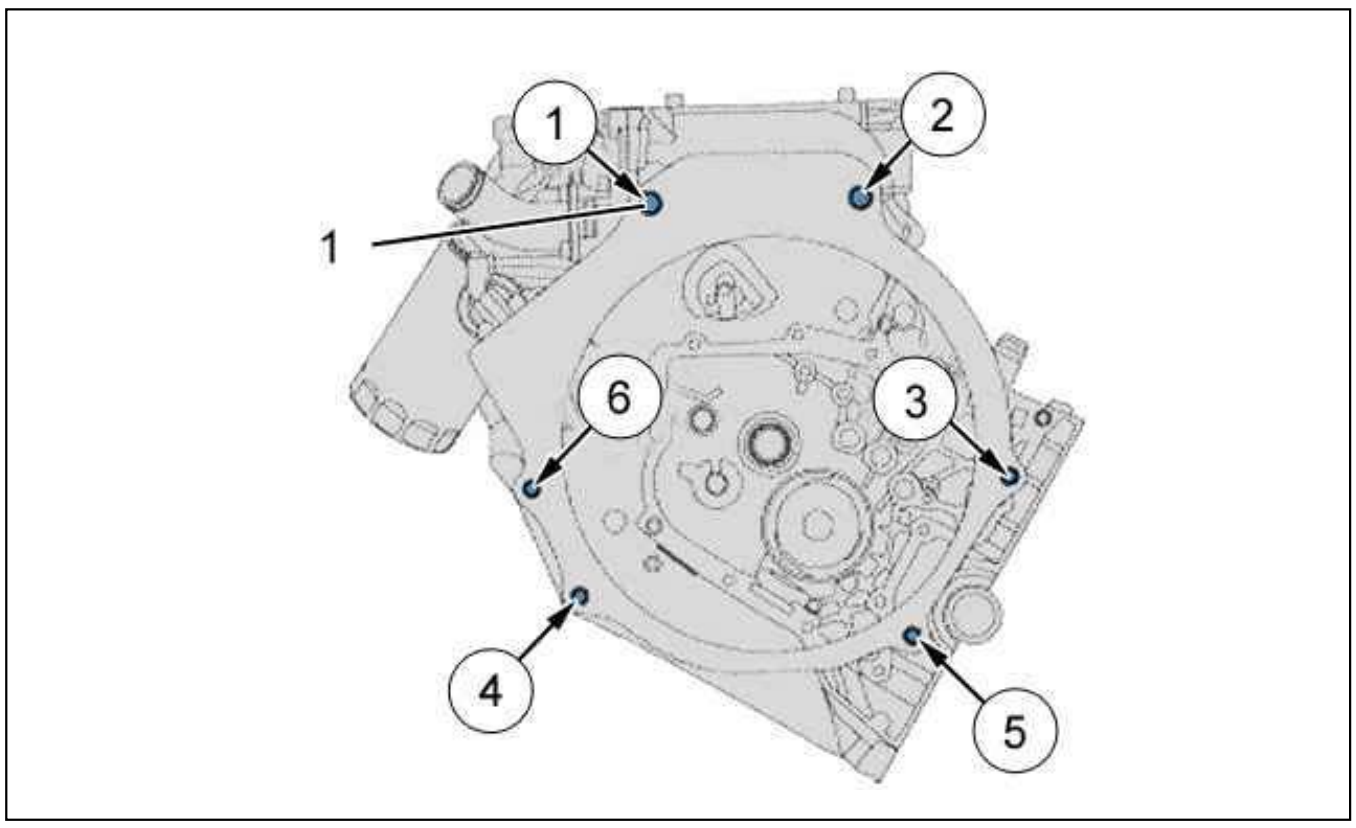

Figure : B2CG2Q5D

Clean the screw threads (1).

Refit the 6 bolts (1) in the sequence indicated (tighten by hand).

Tighten the bolts (1) in the sequence indicated.

Reconnect the connector of the reverse gear switch.

Reconnect the electrical harnesses relating to the gearbox.

Refit :

- The starter motor
- The power unit assembly

DRAIN AND REFILL - REFILLING : GEARBOX

ESSENTIAL : Observe the safety and cleanliness recommendations .

1. Tooling

tool	Reference	Designation
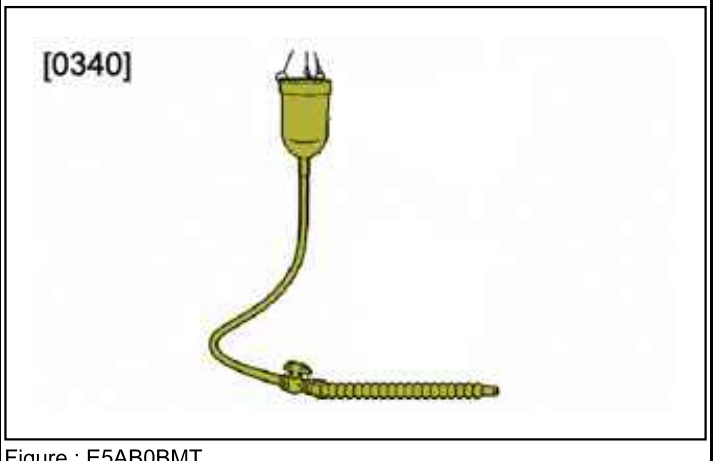 Figure : E5AB0BMT	[0340]	topping up cylinder

N.B. : The gearbox is lubricated for life. Visually check the sealing at each service visit.

ESSENTIAL : It is necessary to drain the gearbox and put back the exact quantity of oil, in the event of an external leak or a repair.

2. Presentation

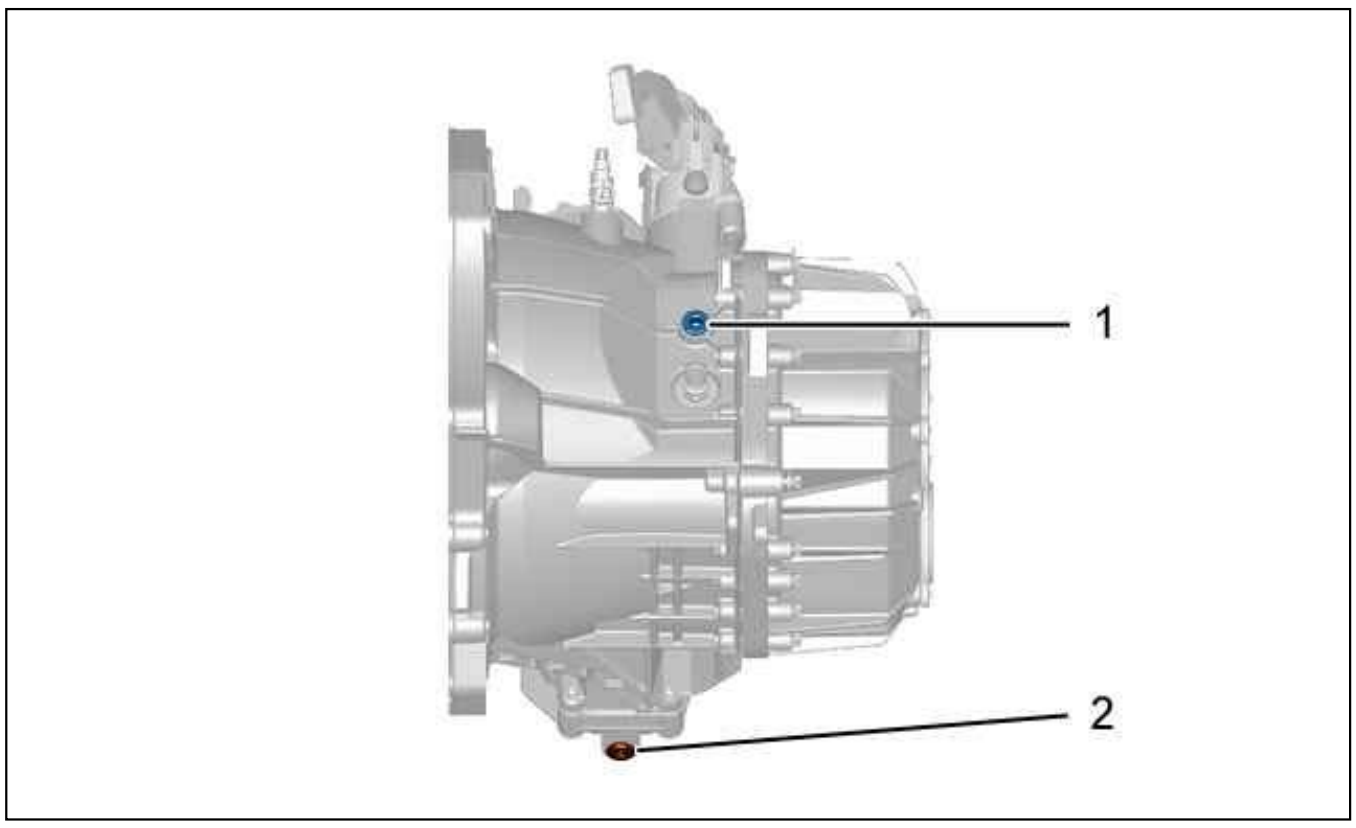

Figure : B2CM00DD

(1) Filler hole.
(2) drain plug.

N.B. : Fit a new seal after draining.

3. Oil quality

Recommended oils : TOTAL TRANSMISSION BV SAE 75 W 80 API GL-4.

4. Oil quantity

N.B. : Refill the gearbox via the air vent hole (1) ; Using tool [0340].

Quantity of oil to be replaced : 2,9 litres.

OVERHAUL : MANUAL GEARBOX M 40 (SUMMARY)

Cleaning and refitting conditions : Manual gearbox .
Presentation : Recommended tools .
Stripping : Manual gearbox .
Dismantling : Manual gearbox .
Stripping-assembling : Components inside the gearbox .
Refitting : Manual gearbox .
Re-assembling : Manual gearbox .

CLEANING AND REFITTING CONDITIONS : GEARBOX

Do not use abrasives or sharp tools on the joint faces.
Clean the threads and taps.
Fit only parts which are clean and free from faults (scores, burrs, knocks).
Oil the parts as they are refitted.
Always replace (After removal) :

- The seals
- The sealing rings
- The pins
- The bearings
- Spring rings and circlips
- The spring washers
- The hydraulic stop tightening bolts
- The input and output shaft lines tightening bolts

Maintain the matching of :

- Shafts and forks
- Hubs and synchronizers

The working area should be clean and tidy.
Mark components before dismantling.
Store removed components away from dust contamination.

STRIPPING : MANUAL GEARBOX

ESSENTIAL : Observe the safety and cleanliness recommendations.

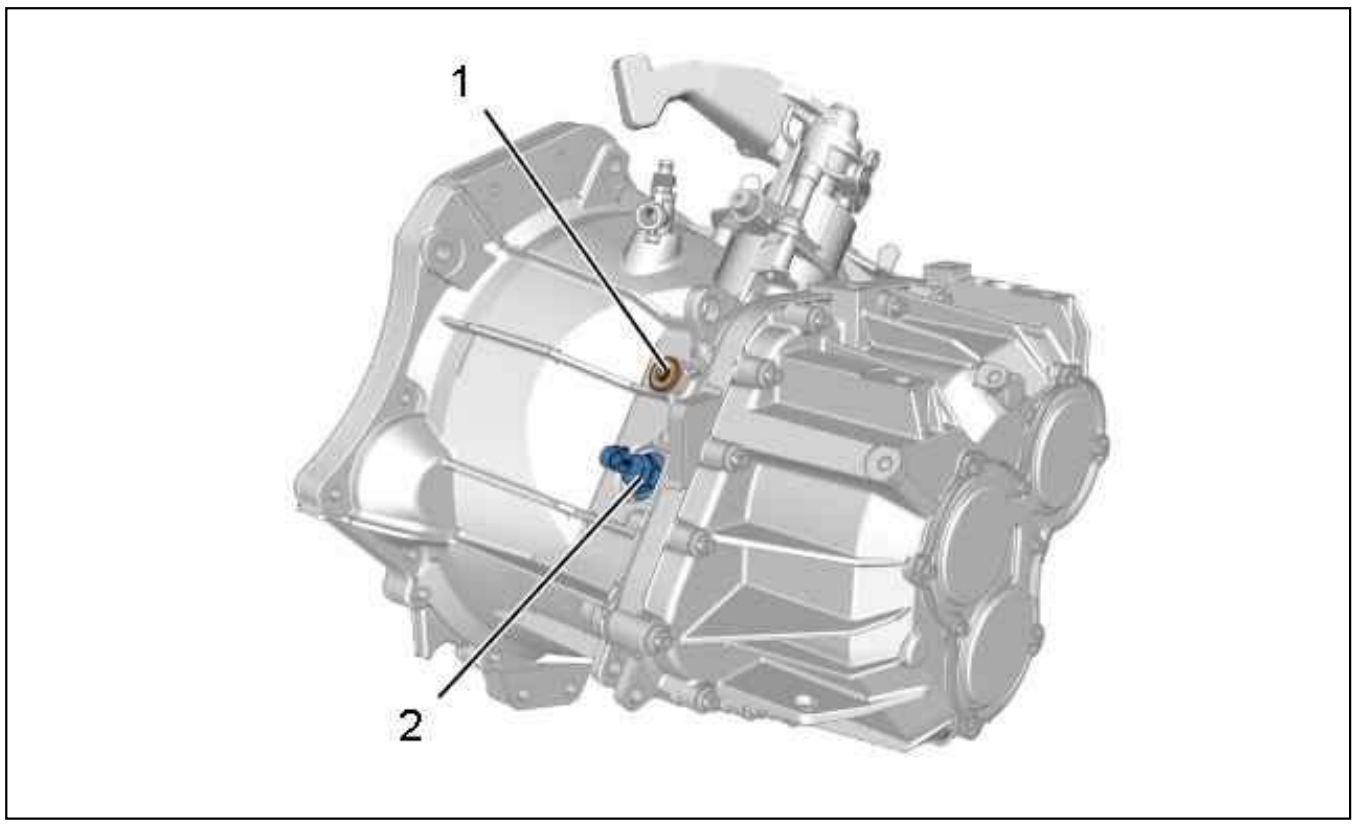

Figure : B2CM0G8D

Remove :

- The oil filler plug (1)
- The reverse switch (2)

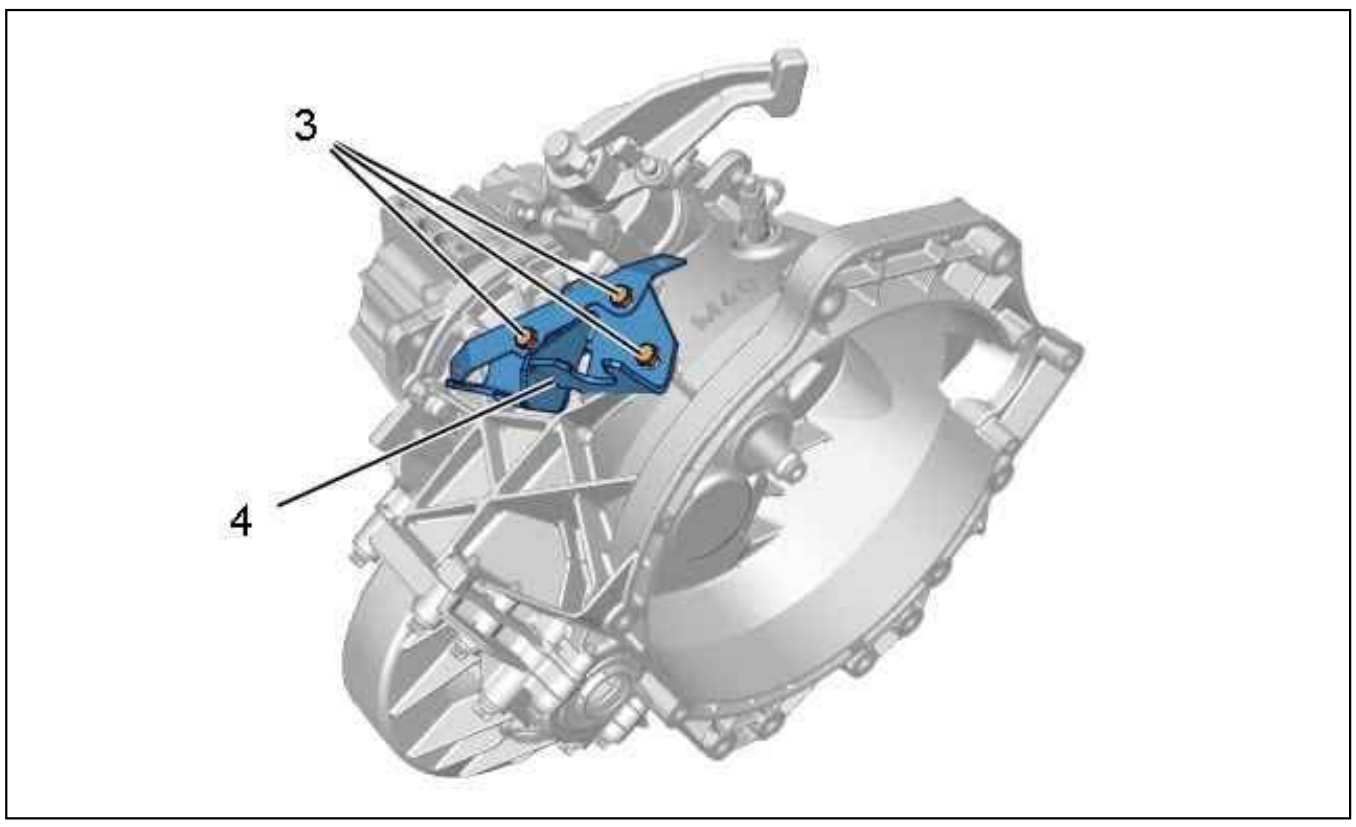

Figure : B2CM0G9D

Remove :

- The bolts (3)
- Cable control support (4)

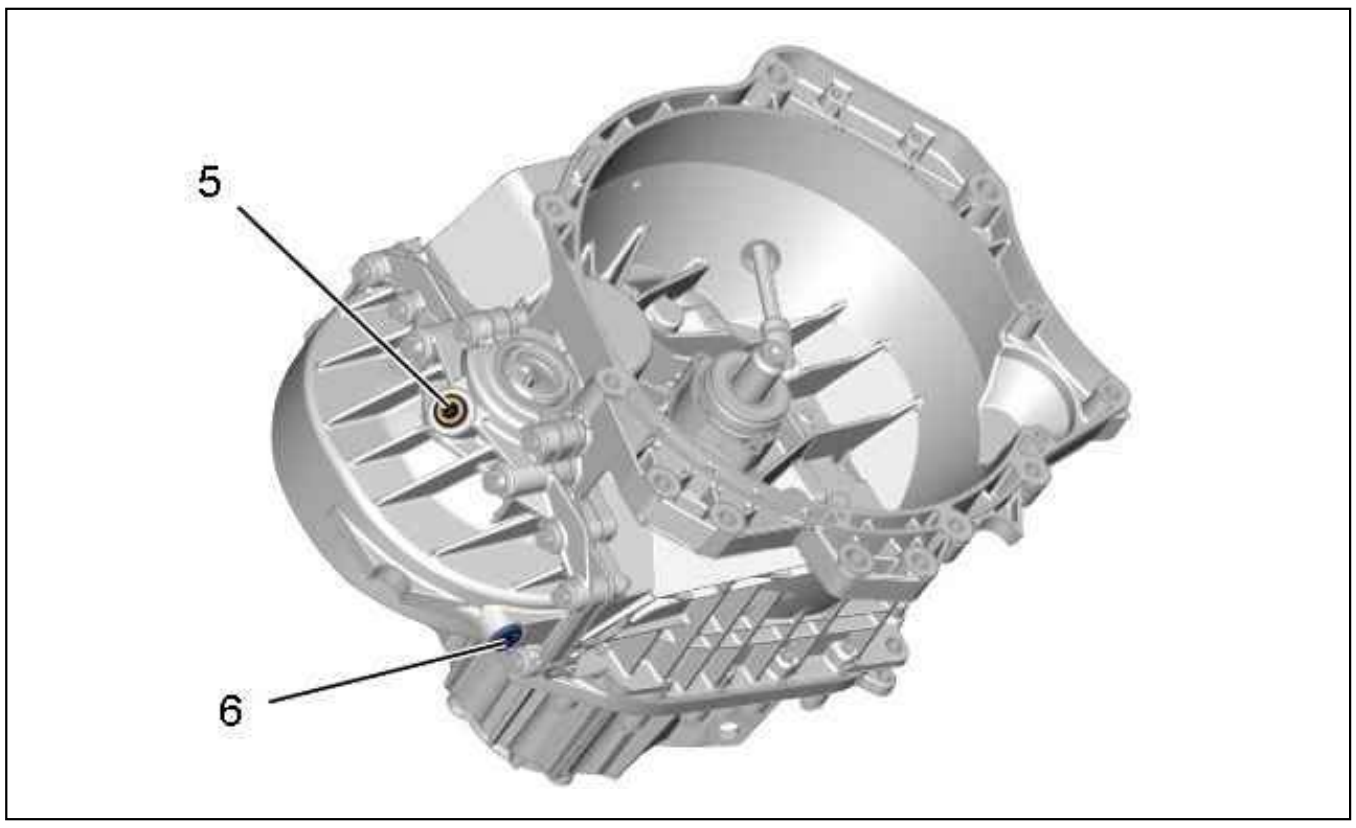

Figure : B2CM0GAD

Remove :

- The oil level plug (5)
- The gearbox oil drain plug (6)

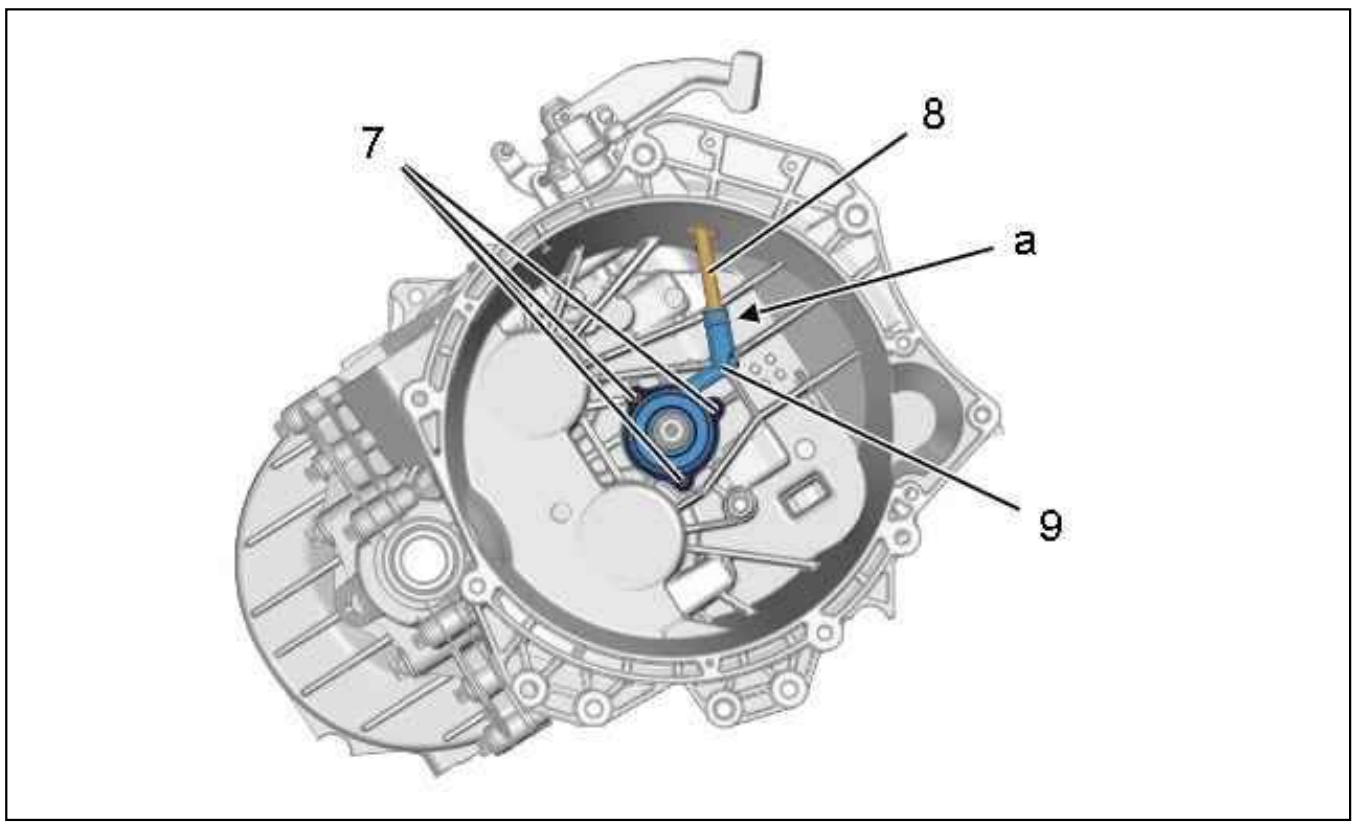

Figure : B2CM0GBD

Remove :

- The clip (as "a")
- The tube (8)
- The bolts (7)
- The hydraulic clutch control cylinder (9)

RE-ASSEMBLING : MANUAL GEARBOX

ESSENTIAL : Observe the safety and cleanliness recommendations.

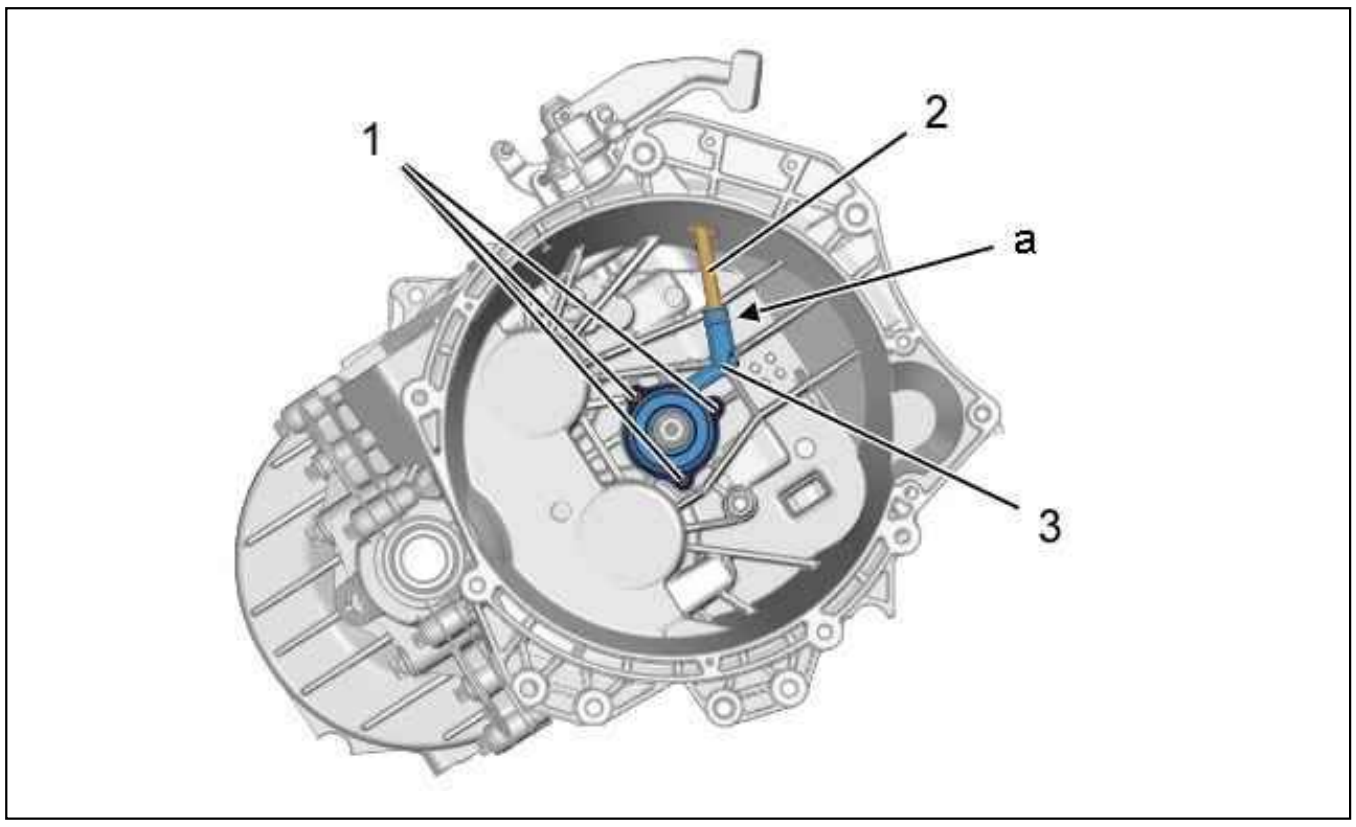

Figure : B2CM0G4D

Refit the hydraulic clutch control slave cylinder (3).
Refit :

- The bolts (1) ; Tighten to 0,9 ± 0,1 daN.m
- The tube (2)
- The clip (as "a")

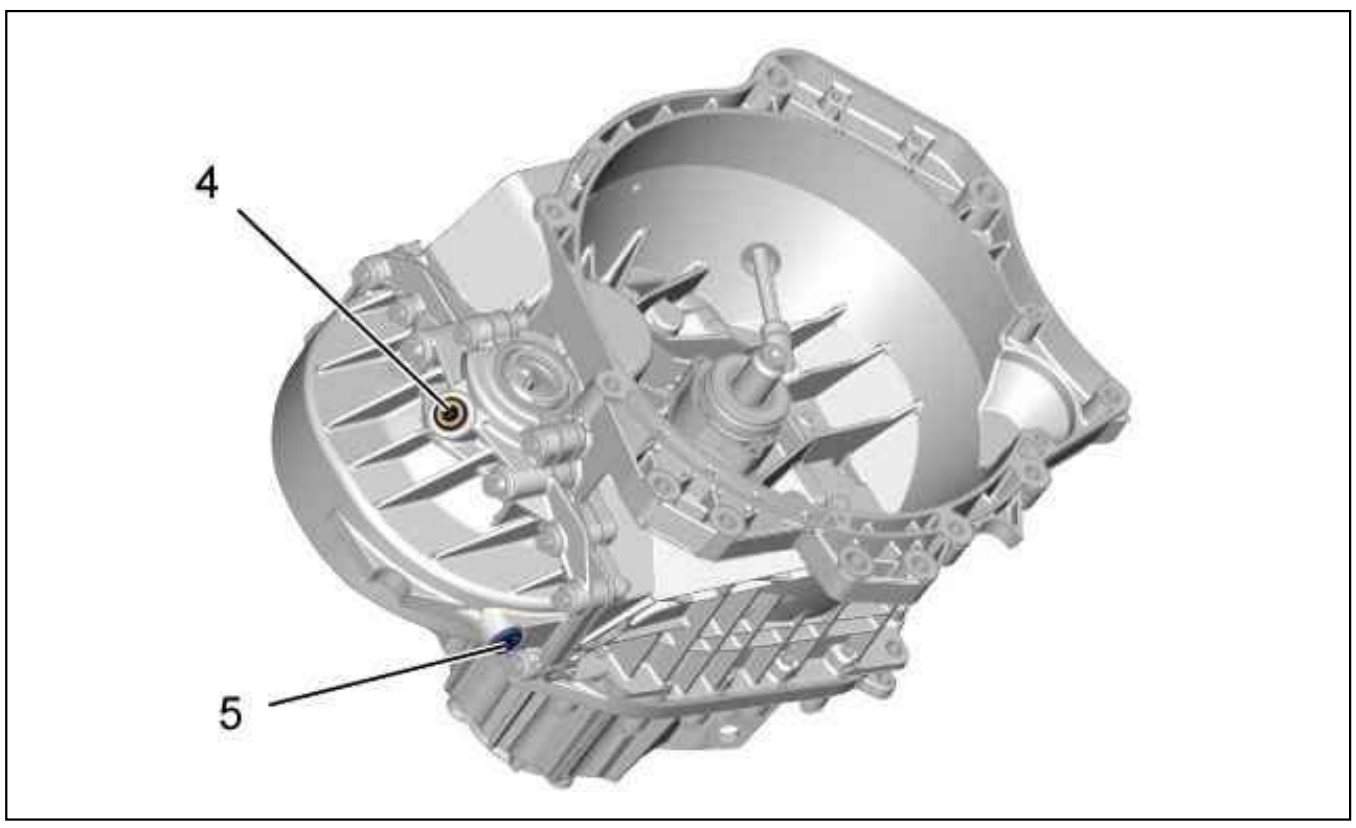

Figure : B2CM0G5D

Replace the plugs (4) and (5) ; Tighten to 5 ± 0,5 daN.m.

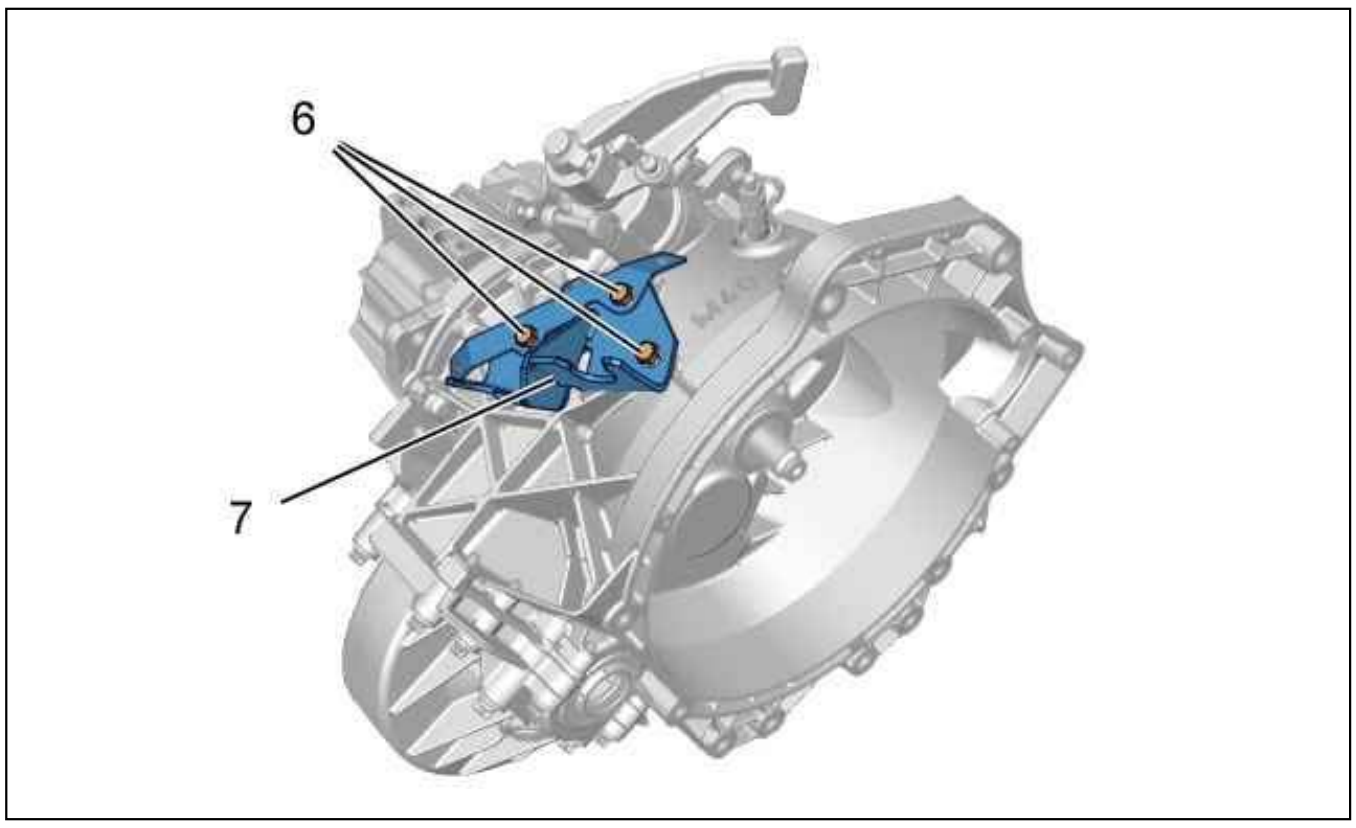

Figure : B2CM0G6D

Refit :

- The bracket (7)
- The bolts (6) ; Tighten to 2,5 ± 0,3 daN.m

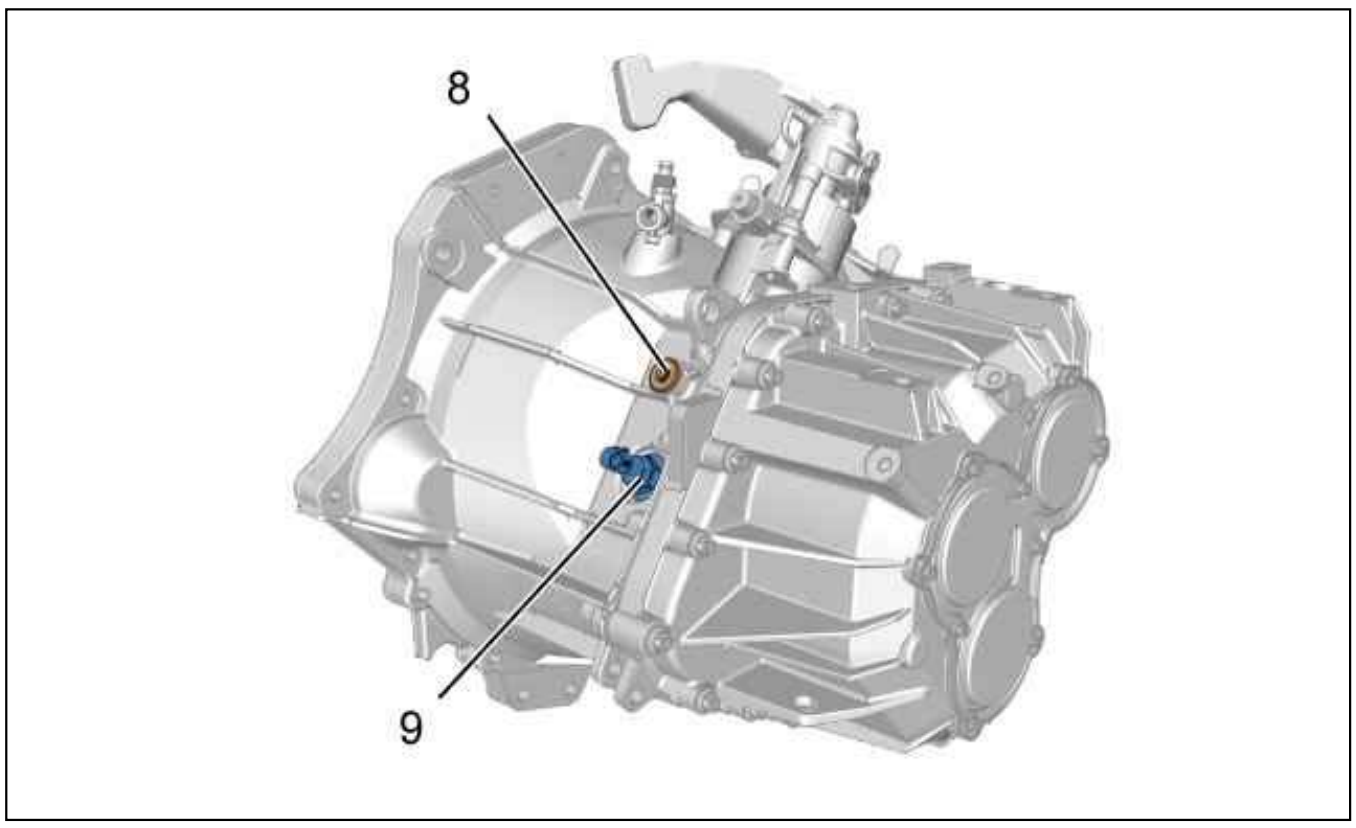

Figure : B2CM0G7D

Refit :

- The cap (8) ; Tighten to 1 ± 0,1 daN.m
- The reverse switch (9) ; Tighten to 2 ± 0,2 daN.m

MODIFICATION : MANUAL GEARBOX

1. Foreword

Modification of the primary shafts greasing procedure.

CAUTION : Excessive greasing of the primary shaft may damage the clutch system as a result of splashes of grease.

2. Procedure to be followed : Greasing method

CAUTION : Clean and remove all traces of corrosion of the primary shaft along its entire length, over its entire periphery and in the splines using a meta hand brush.

N.B. : Protect the interior of the clutch housing from splashes of grease.

CAUTION : An excess of grease will contaminate the clutch friction plate and cause noise in neutral, slipping or juddering of the clutch. Remove the excess grease from the splines of the primary shaft using a clean cloth.

2.1. Vehicles equipped with a gearbox that has a mechanical clutch bearing

Spray a little grease MOLYCOTE G-RAPID PLUS (aerosol) on the splines of the primary shaft and on the clutch bearing guide tube .

2.2. Vehicles equipped with a gearbox that has a hydraulic clutch bearing

Grease the splines of the primary shaft with Kluberpaste 46 MR 401.

REMOVING - REFITTING : ACCESSORIES DRIVE BELTS

ESSENTIAL : Observe the safety and cleanliness recommendations .

1. Tooling

tool	Reference	Designation
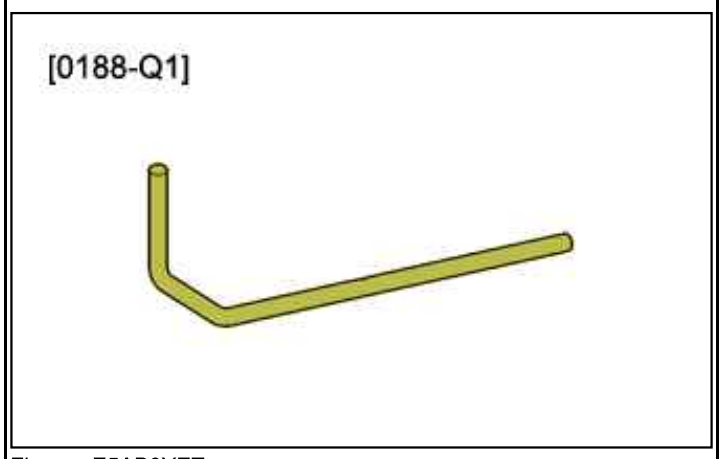 Figure : E5AB0YET	[0188-Q1]	4 mm diameter pin
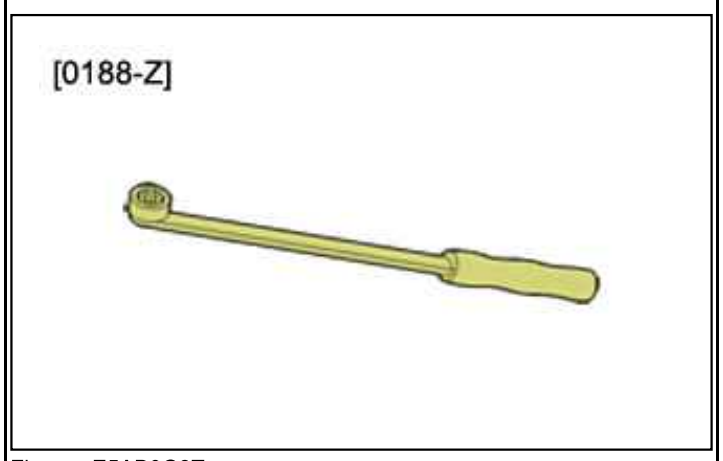 Figure : E5AB0G3T	[0188-Z]	Dynamic tensioner compression lever
 Figure : E5AB10XT	[0191-2T]	Socket for removing the accessories drive belt
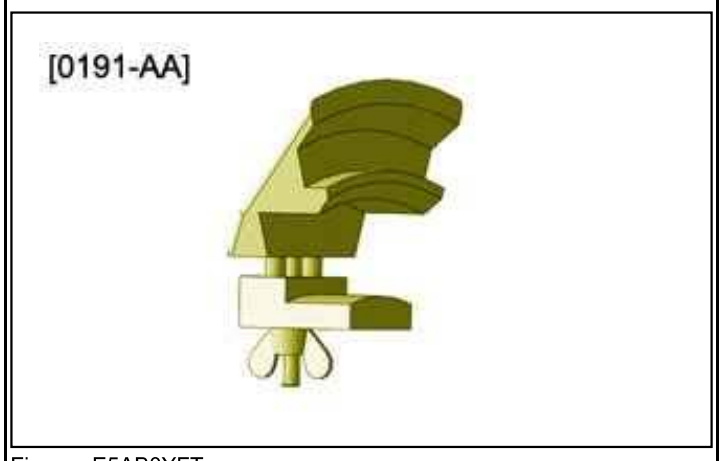 Figure : E5AB0YFT	[0191-AA]	Elastic auxiliary drive belt removal tool
	[0191-AB]	Elastic auxiliary drive belt fitting tool

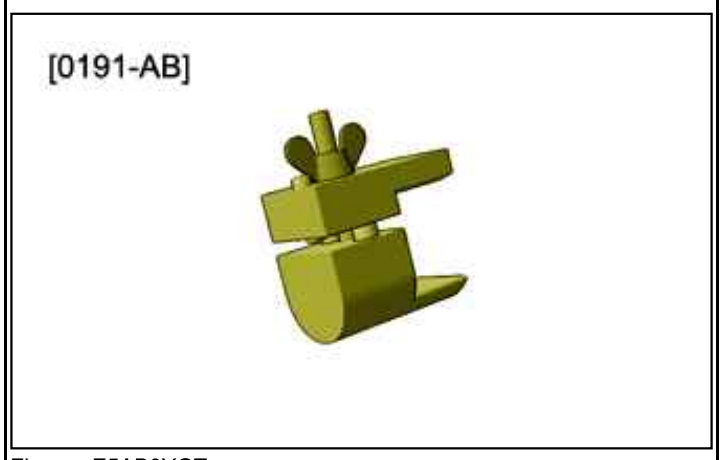

Figure : E5AB0YGT

2. Removing

Remove :

- The front right headlamp
- The sound insulation under the engine
- The front right wheel

2.1. Vehicle without air conditioning

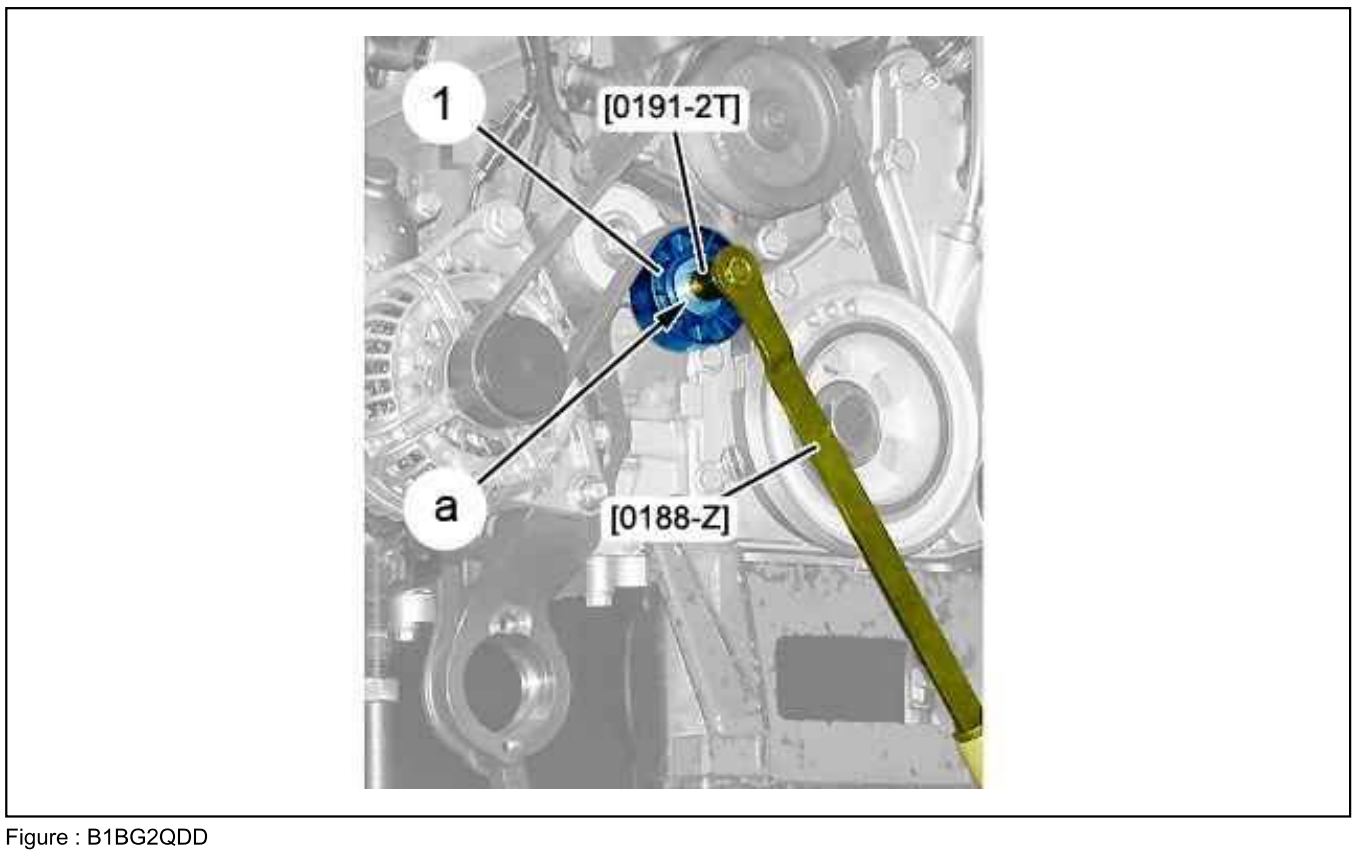

Figure : B1BG2QDD

CAUTION : Note the direction of fitting of the alternator and coolant pump belt if being re-used.

Compress the dynamic roller tensioner (1) (at "a") (clockwise) ; Using the tools [0188-Z], [0191-2T].

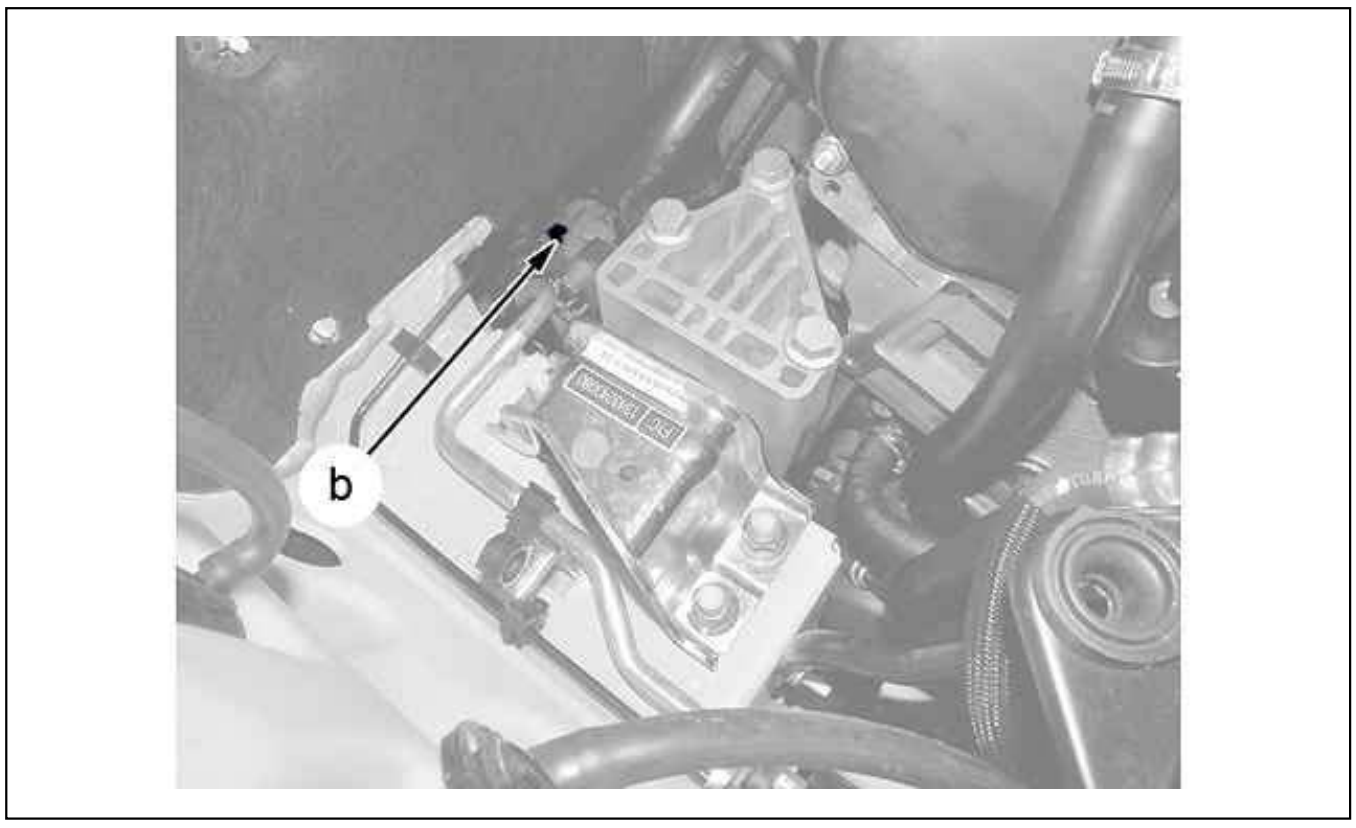

Figure : B1BPSSDD

Peg (at "b") ; Using tool [0188-Q1].
Remove : The alternator and coolant pump belt.

CAUTION : Check that the dynamic roller tensioner (1) turns freely (no clearance or points of resistance).

2.2. Vehicle with air conditioning

2.2.1 - Flexible ancillary drive belt .

CAUTION : Before removing, and for any re-use of the elastic auxiliary drive belt once removed, it is compulsory for the engine to be at ambient temperature (Below 30 °C) ; In all other cases, replace the elastic auxiliary drive belt with a new elastic belt.

N.B. : Removal while the engine is warm results in irreversible and invisible damage to the elastic auxiliary drive belt.

CAUTION : Note the direction of rotation of the elastic auxiliary drive belt if being re-used (Before removal).

CAUTION : If it is to be replaced, cut the elastic auxiliary drive belt and remove it.

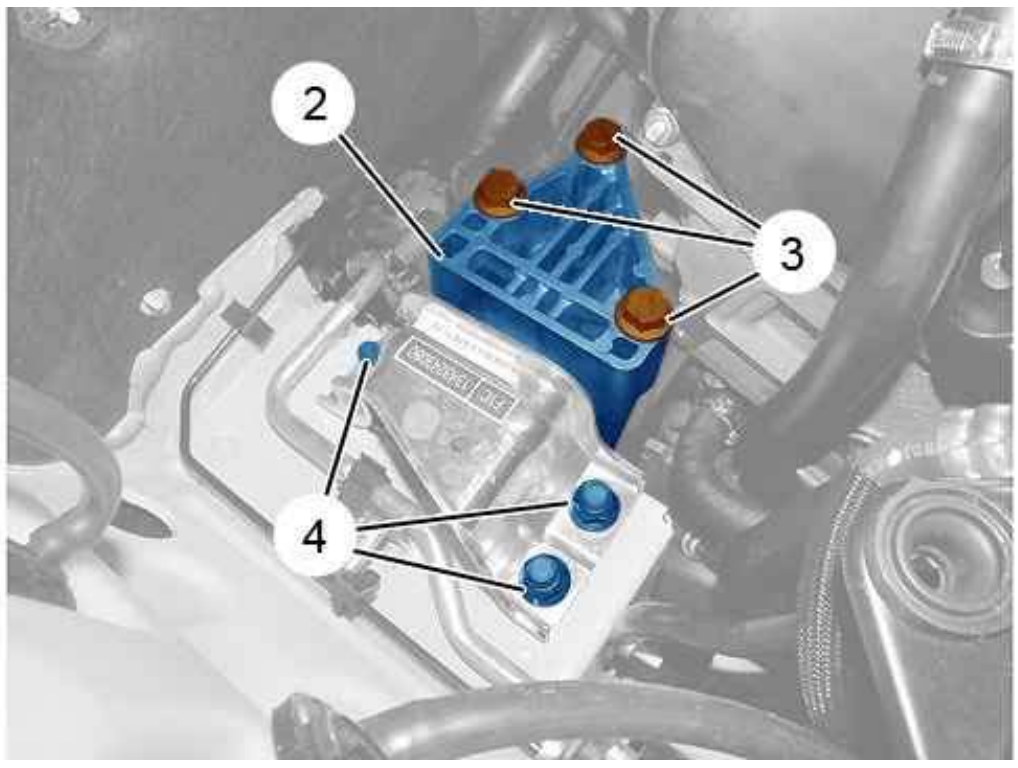

Figure : B1BPSSED

Place the engine in a sling ; Using a workshop crane.
Remove :

- The nuts (4)
- The bolts (3)
- The engine mounting (2)

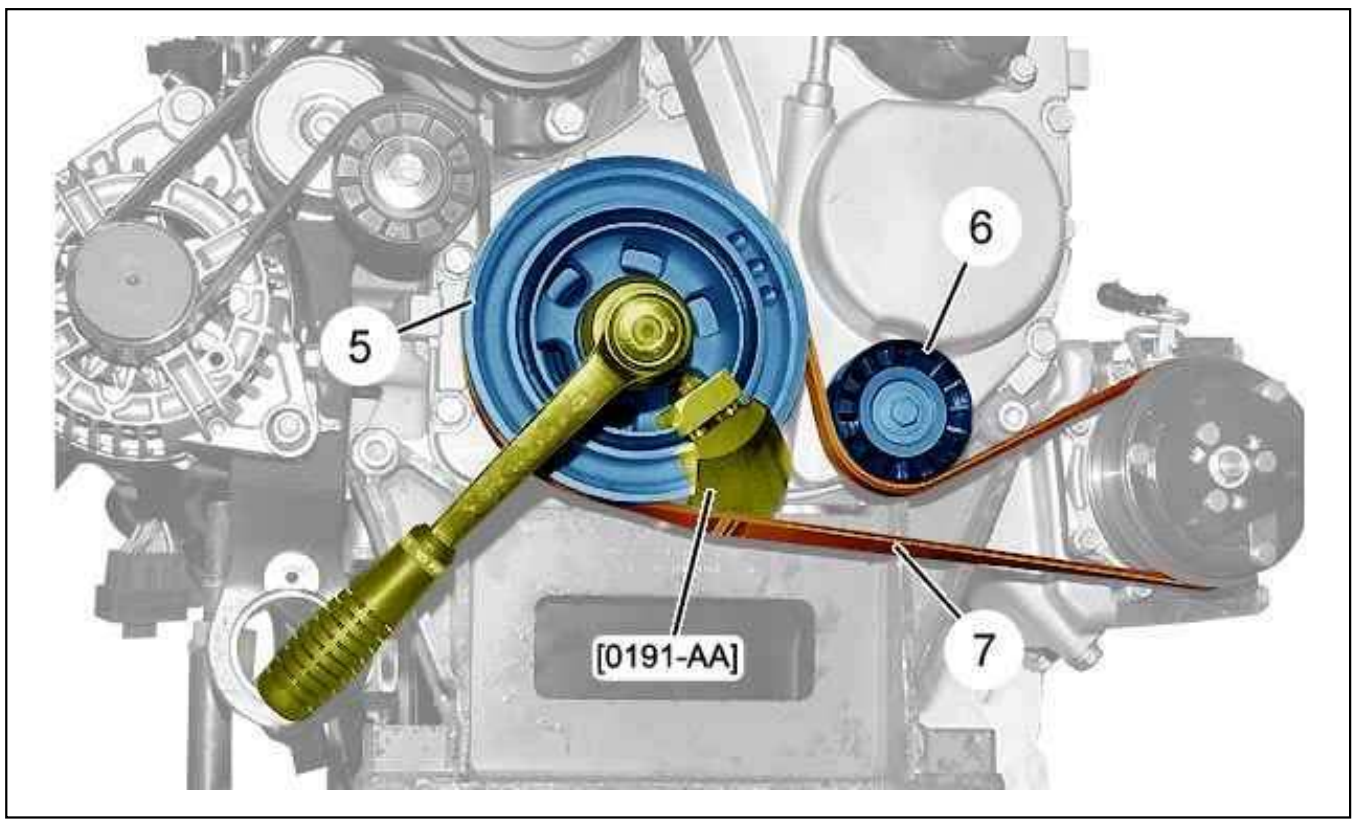

Figure : B1BG2QED

Lower the engine.
Position tool [0191-AA] on the accessories drive pulley (5).
Turn the accessories drive pulley (5) (In the normal direction of rotation).
Remove the flexible ancillary drive belt (7).

CAUTION : Check that the roller (6) turns freely (no play or tight spot).

2.2.2 - Water pump and alternator belt.

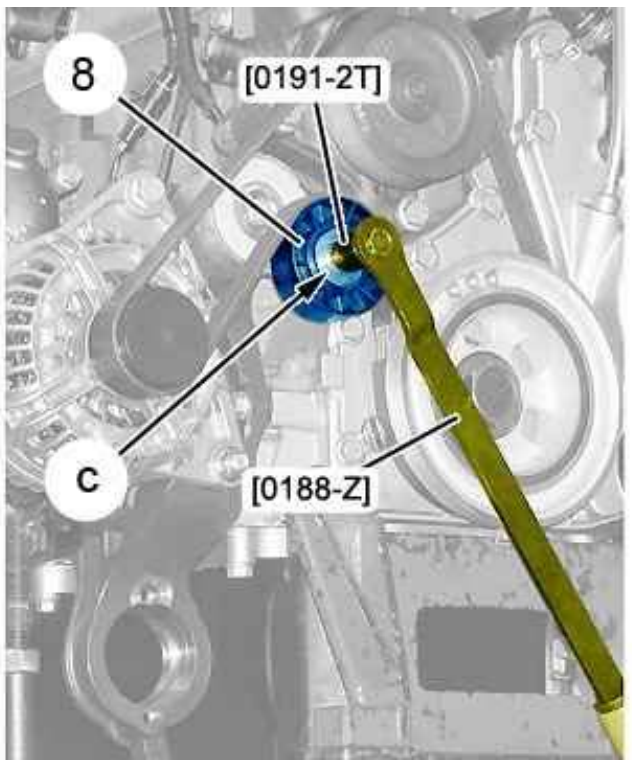

Figure : B1BG2QFD

CAUTION : Note the direction of fitting of the alternator and coolant pump belt if being re-used.

Compress the dynamic roller tensioner (8) (at "c") (clockwise) ; Using the tools [0188-Z], [0191-2T].

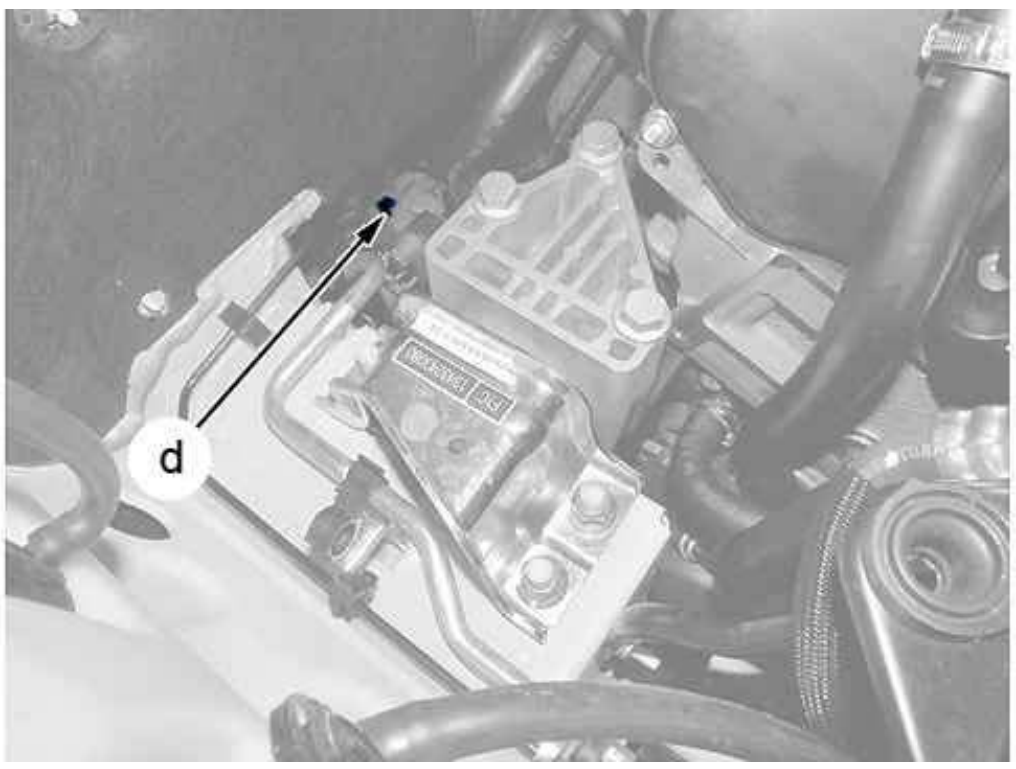

Figure : B1BPSSHD

Peg (at "d") ; Using tool [0188-Q1].

Remove : The alternator and coolant pump belt.

CAUTION : Check that the dynamic roller tensioner (8) turns freely (no clearance or points of resistance).

3. Refitting

3.1. Vehicle without air conditioning

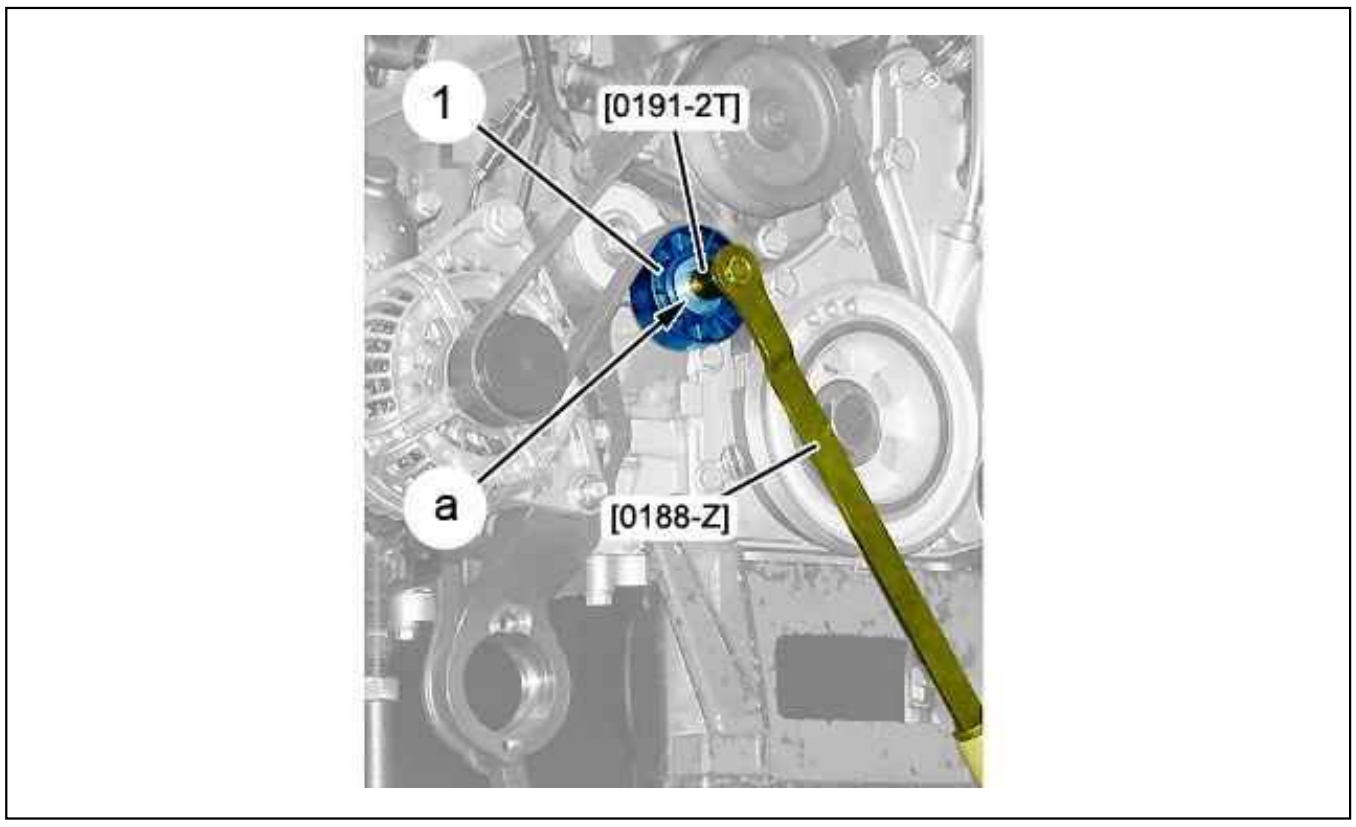

Figure : B1BG2QDD

Refit : The alternator and coolant pump belt.

CAUTION : Check that the alternator and coolant pump belt is correctly positioned in the grooves of the various pulleys.

Compress the dynamic roller tensioner (1) (at "a") (clockwise) ; Using the tools [0188-Z], [0191-2T].
Remove the tool [0188-Q1].

3.2. Vehicle with air conditioning

3.2.1 - Water pump and alternator belt.

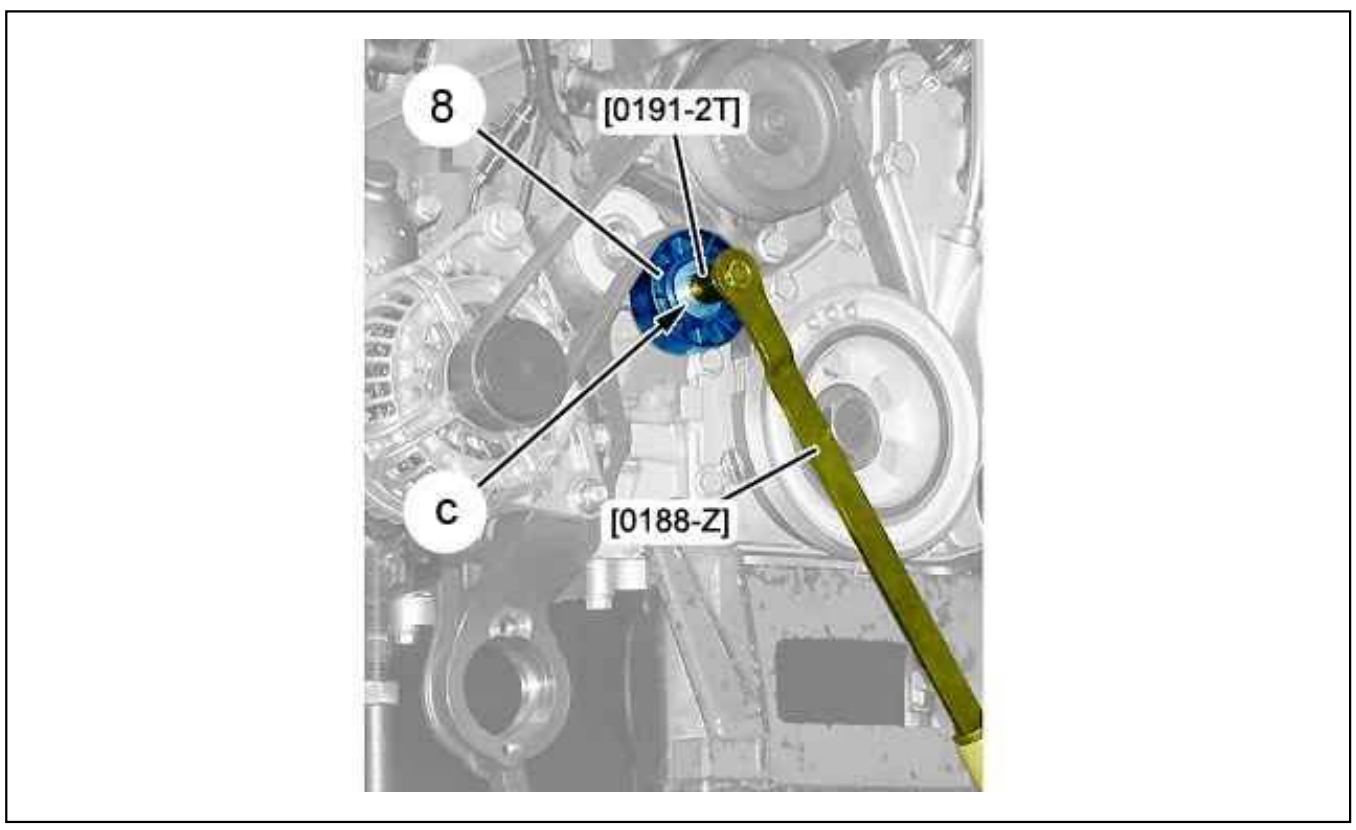

Figure : B1BG2QFD

Refit : The alternator and coolant pump belt.

CAUTION : Check that the alternator and coolant pump belt is correctly positioned in the grooves of the various pulleys.

Compress the dynamic roller tensioner (8) (at "c") (clockwise) ; Using the tools [0188-Z], [0191-2T].
Remove the tool [0188-Q1].
3.2.2 - Flexible ancillary drive belt (7).
Position the tool [0191-AB] on the auxiliary drive pulley (5).

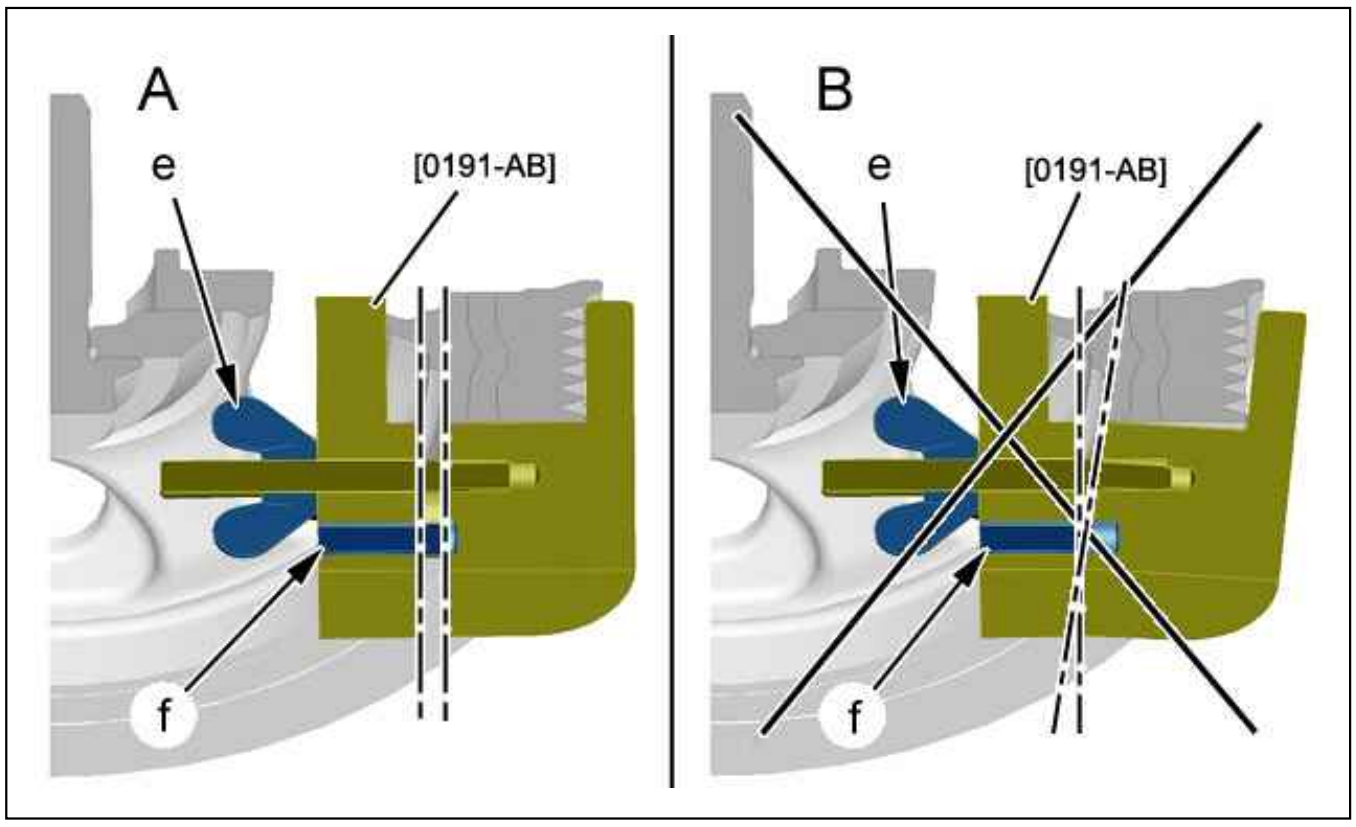

Figure : B1BG2A0D

"A" : Correct fitting.
"B" : Incorrect fitting.
Tighten the wing nut ("e") observing the parallelism between the faces of the 2 components of the tool [0191-AB].
Tighten the bolt "f" to cancel out the twisting effect of the tool [0191-AB] when fitting the flexible ancillary drive belt (7).

N.B. : Failure to have the faces parallel will result in an incorrect positioning of the elastic auxiliary drive belt (7) in the "Vs" of the auxiliary drive pulley (5) fo crankshaft, alternator pulley or air conditioning compressor pulley. Damage to the elastic auxiliary drive belt (7) results in its inevitable destruction after only a few kilometres.

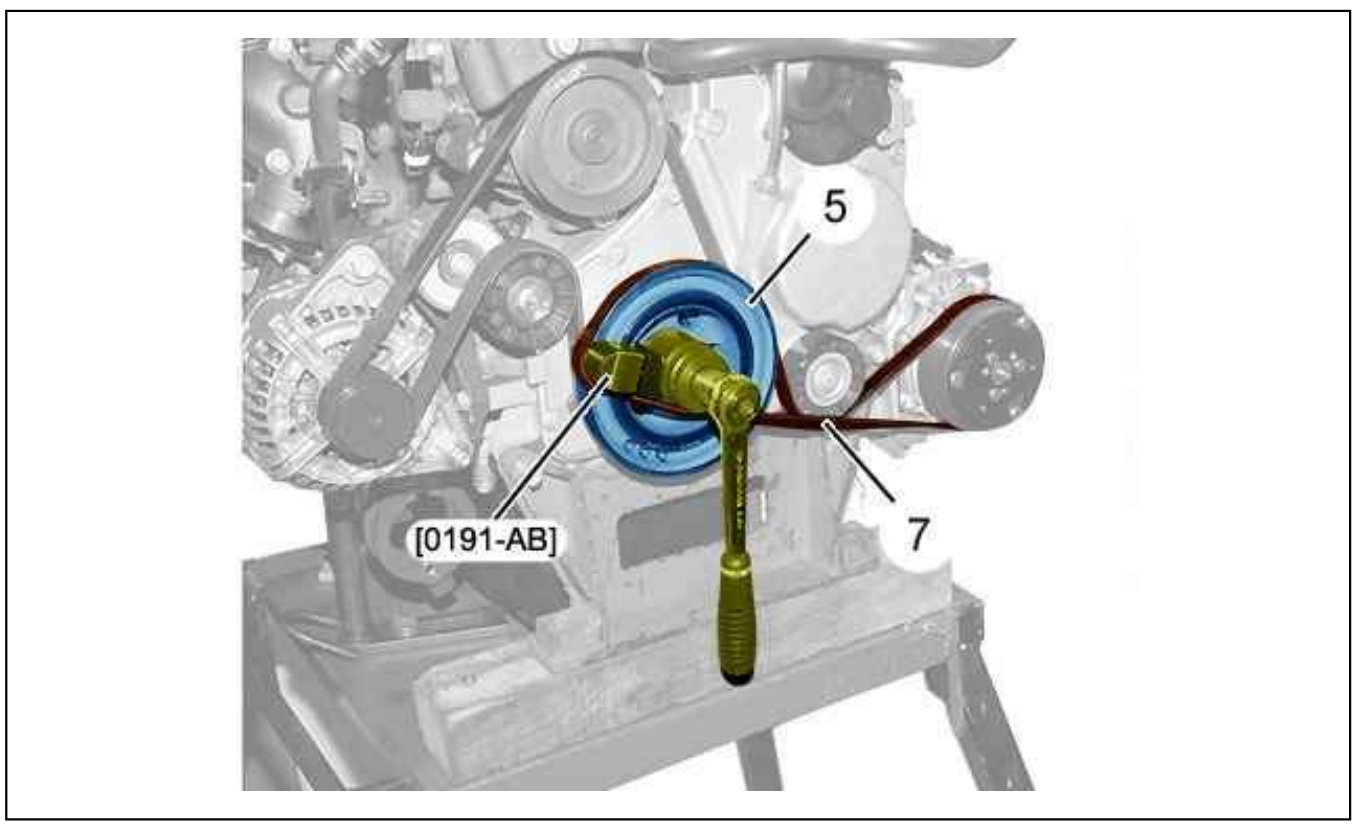

Figure : B1BG2A1D

Refit the flexible ancillary drive belt (7).
Turn the accessories drive pulley (5) anticlockwise until the accessories drive belt (7) is fully fitted onto the pulley (5) of the crankshaft and until tool [0191-AB] has been released.

3.3. Refitting (continued)

Refit the engine mounting (2).
Tighten :

- The bolts (3)
- The nuts (4)

Refit :

- The front right headlamp
- The sound insulation under the engine
- The front right wheel

TIGHTENING TORQUES : POWER ASSISTED STEERING

1. Steering column

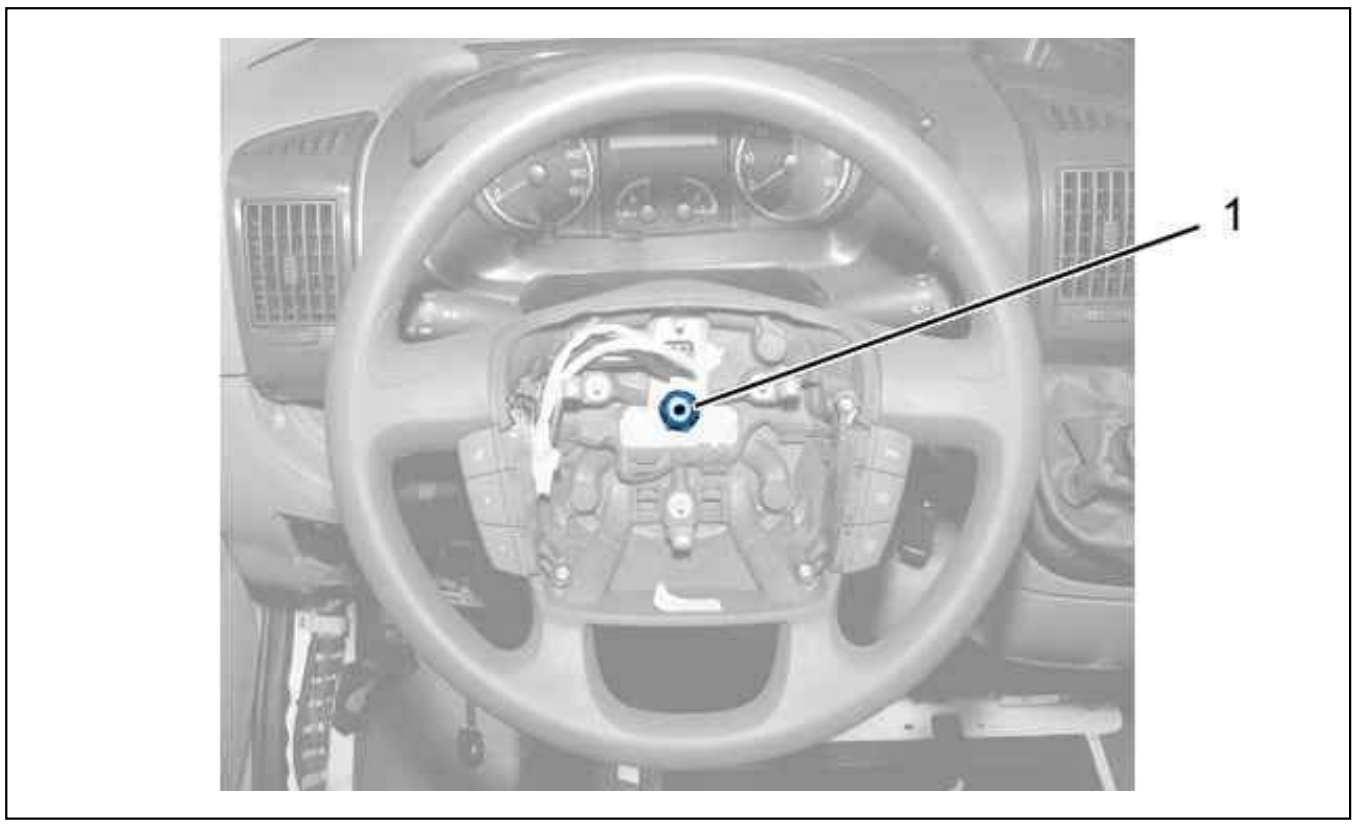

Figure : C5FP11JD

Reference	Designation	Tightening torque
(1)	nut - Steering wheel	5 daNm

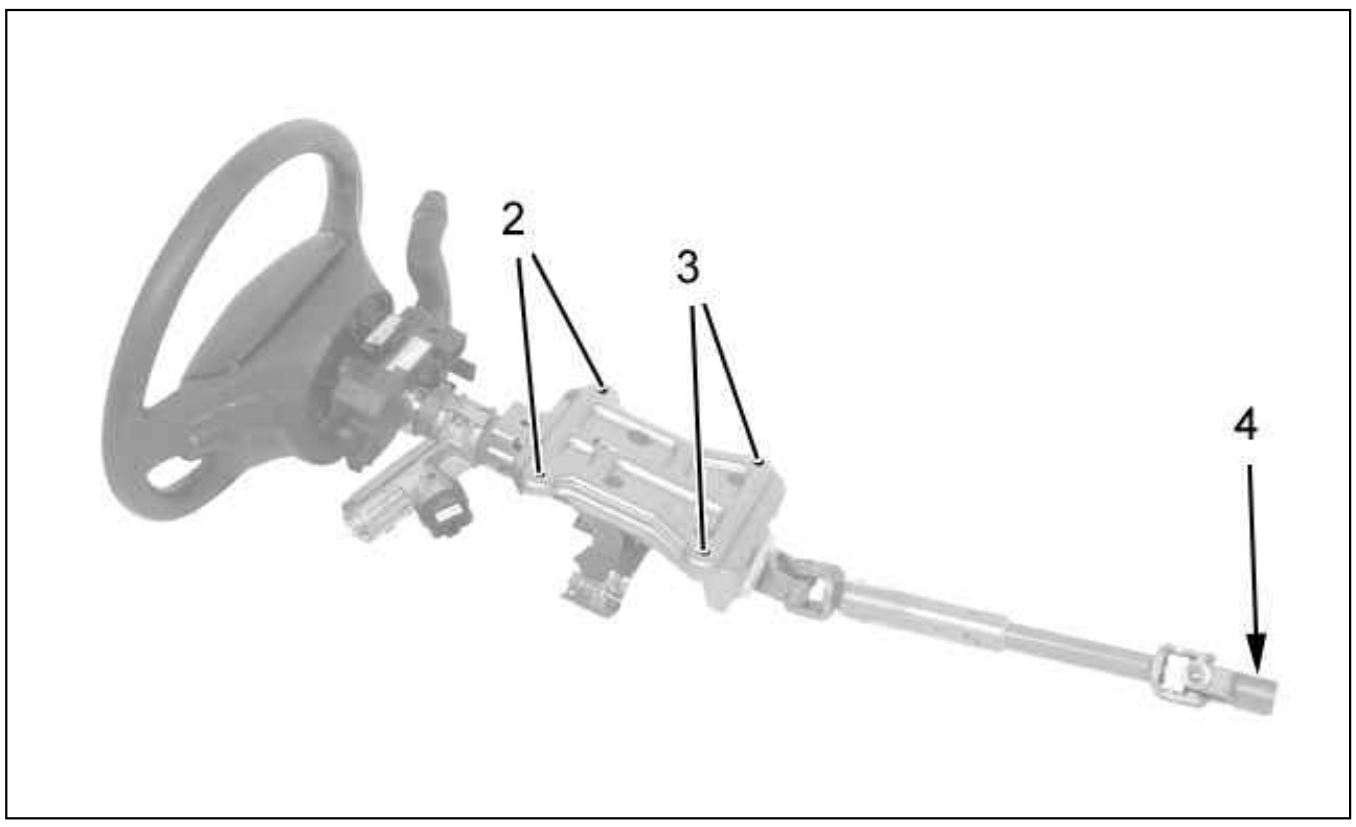

Figure : B3EP197D

Reference	Designation	Tightening torque
(2)	bolts - Steering column	1,5 daNm
(3)	nuts - Steering column	1,5 daNm
(4)	bolts - Steering universal joint	2,5 daNm

2. power-assisted steering pump

2.1. PUMA engine

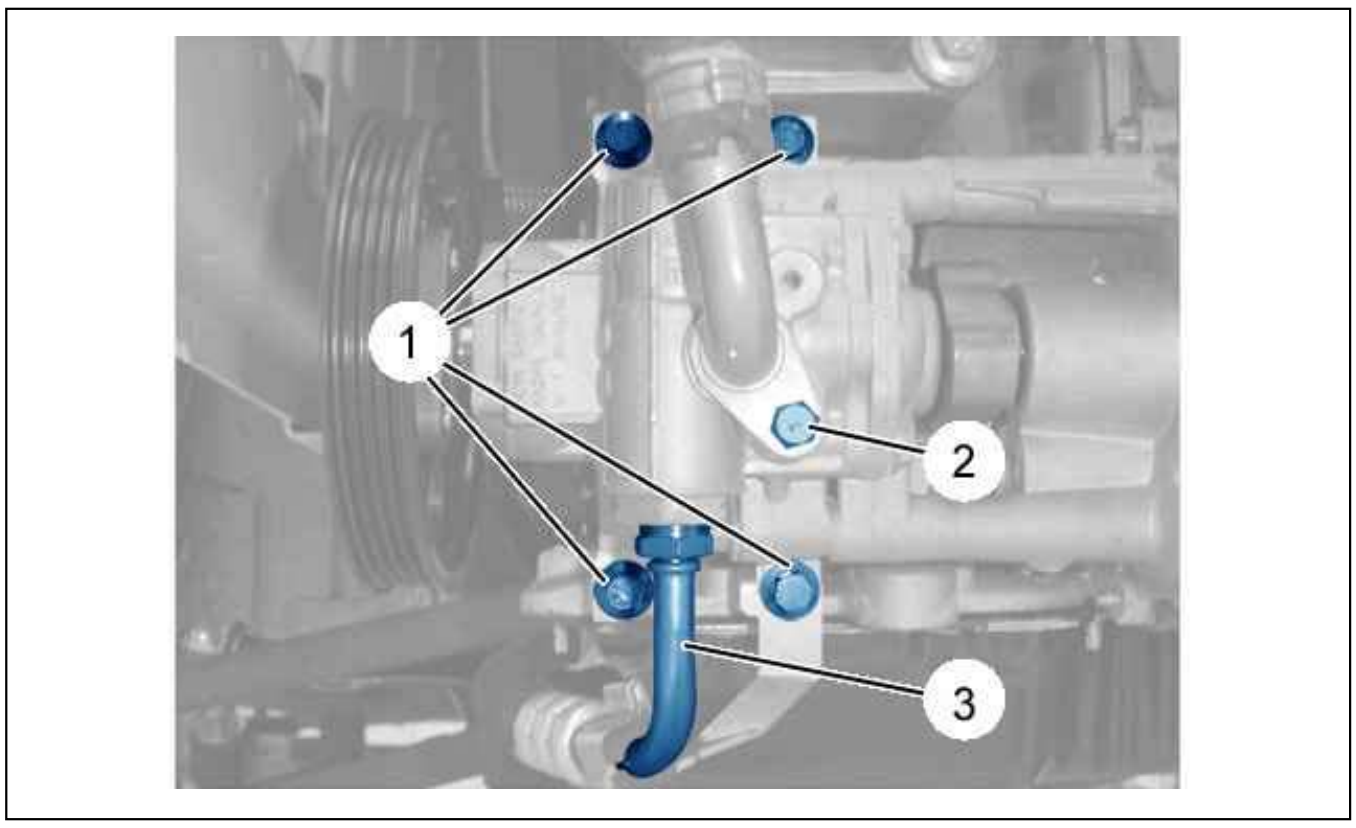

Figure : B3EB02MD

Reference	Designation	Tightening torque
(1)	bolts - power-assisted steering pump	2,2 daNm
(2)	bolts - Supply pipe	0,9 daNm
(3)	High pressure piping - power-assisted steering pump	2,7 daNm

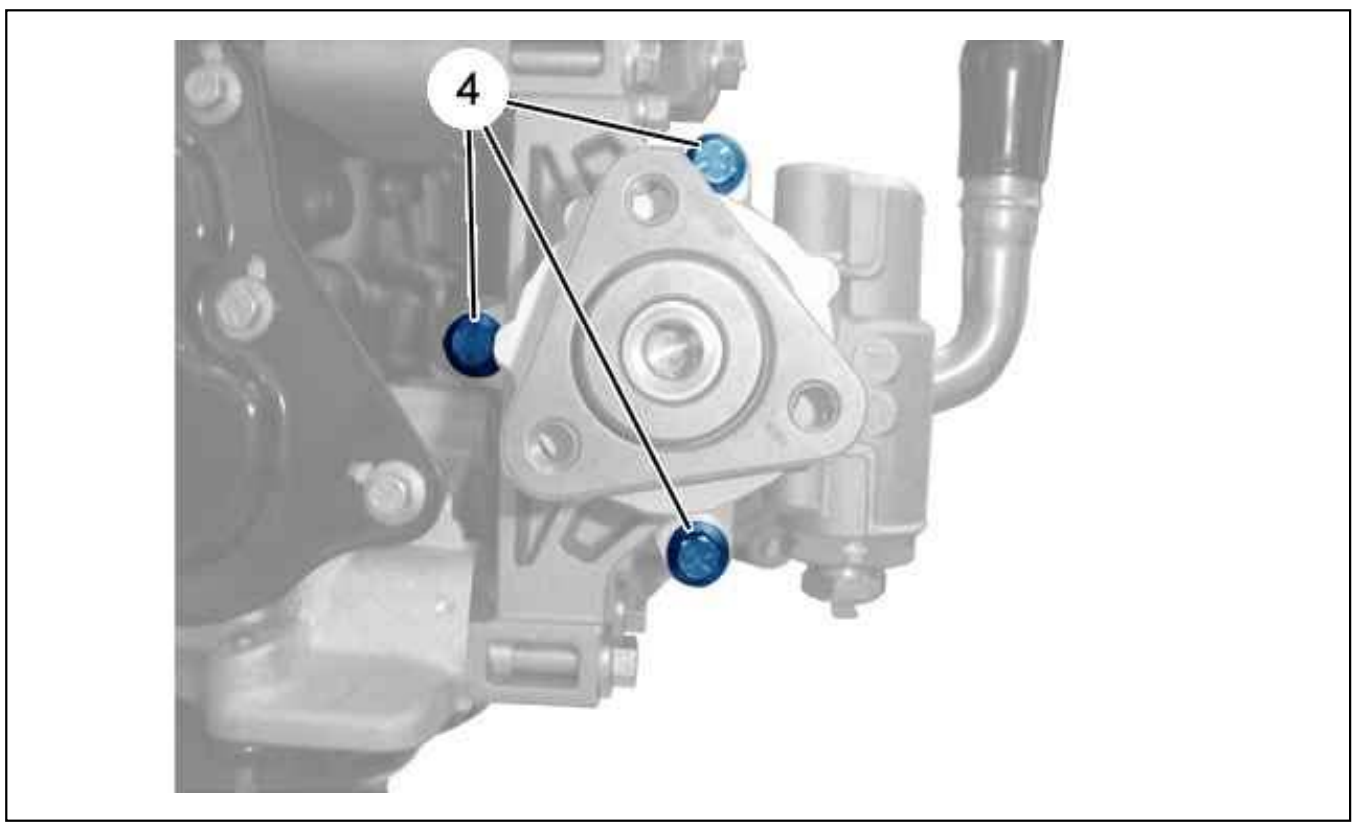

Figure : B3EB02PD

Reference	Designation	Tightening torque
(4)	bolts - power-assisted steering pump	2,2 daNm

2.2. SOFIM engine

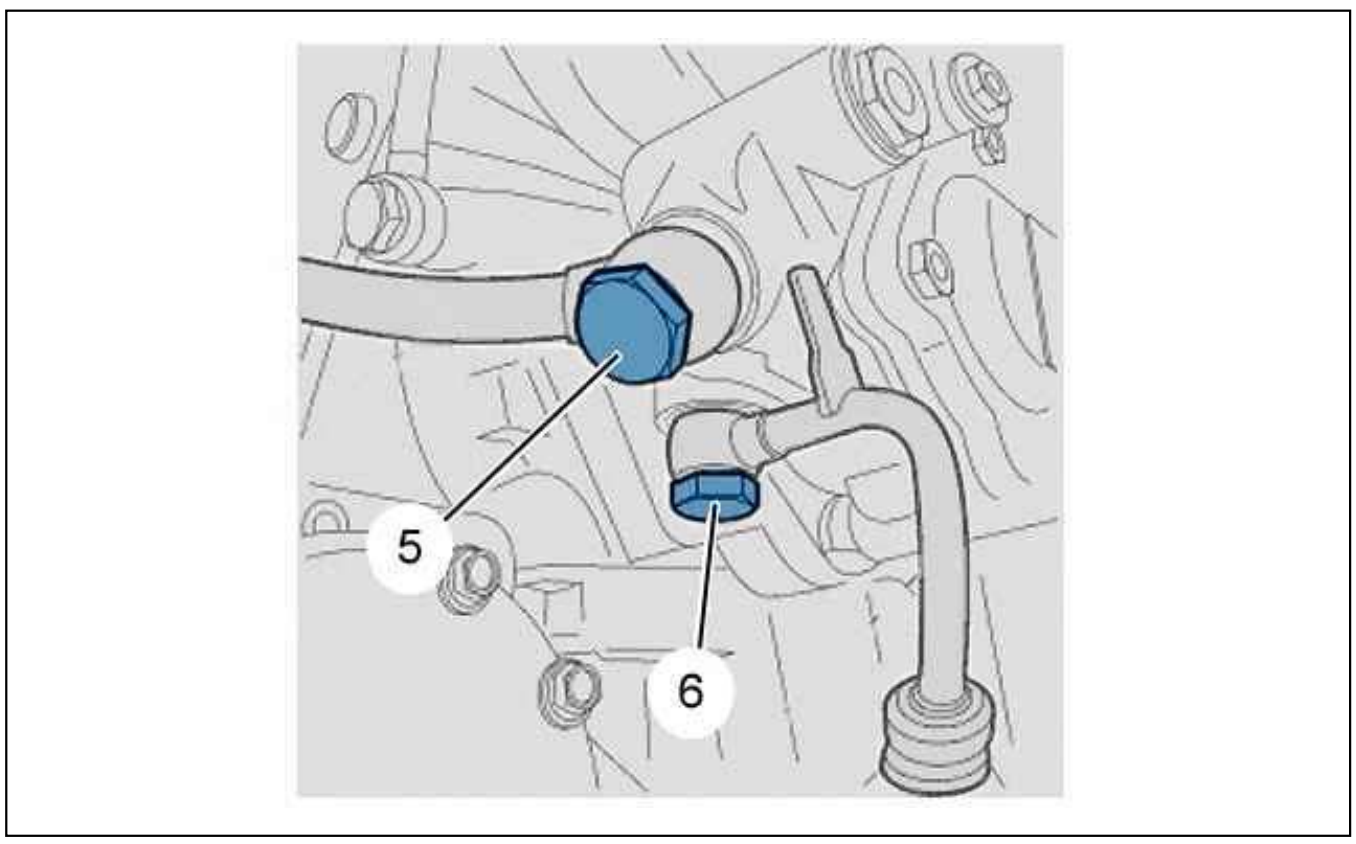

Figure : B3EB02SD

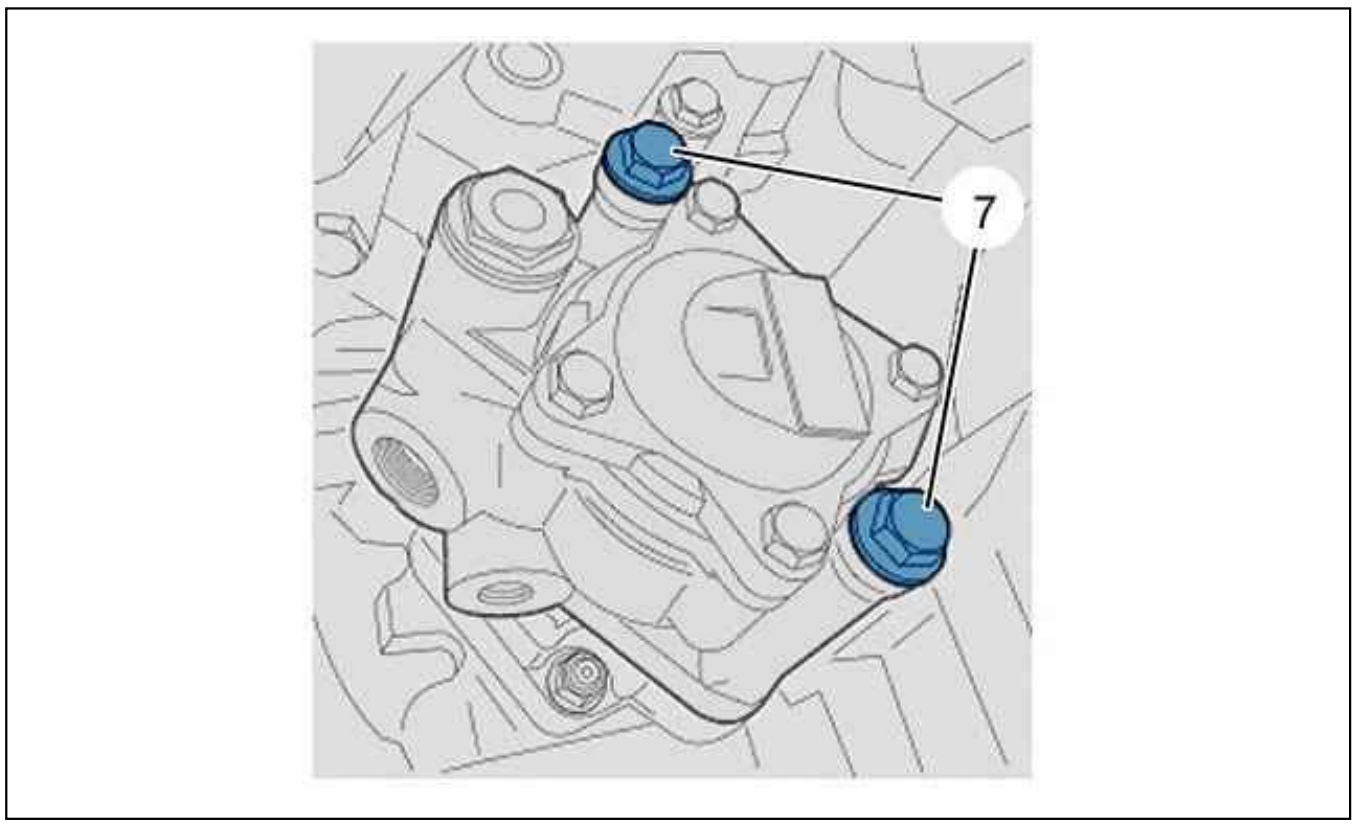

Figure : B3EB02TD

Reference	Designation	Tightening torque
(5)	Union	3,6 daNm
(6)	Union	3,6 daNm
(7)	bolts - power-assisted steering pump	4 daNm

3. Steering mechanism

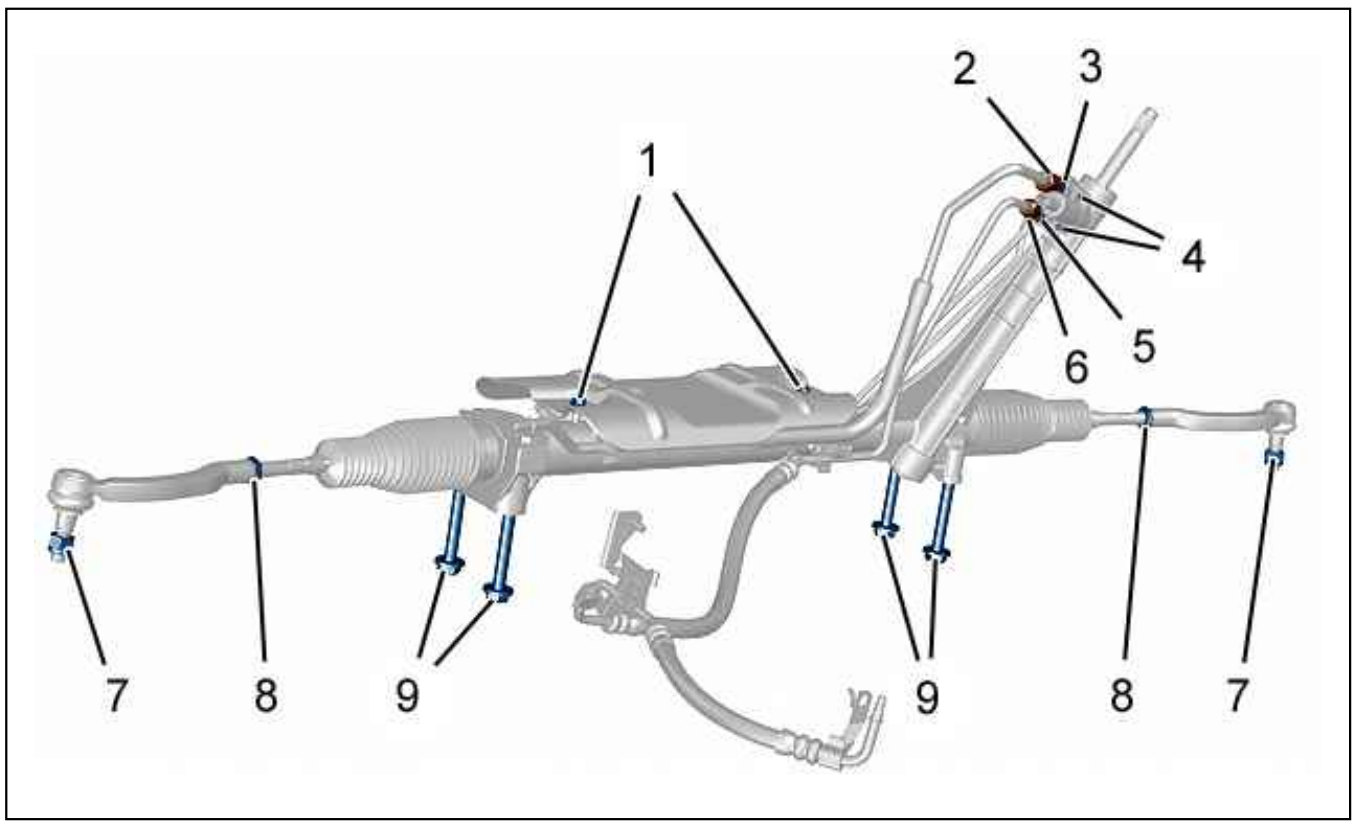

Figure : B3EB02UD

Reference	Designation	Tightening torque
(1)	nut - Heat shield	0,6 daNm
(2)	Low pressure piping - Low pressure union	6,3 daNm
(3)	Low pressure union - Valve	3,2 daNm
(4)	bolts - Power steering proportional electrovalve	2,8 daNm
(5)	High pressure union - Valve	2,8 daNm
(6)	High pressure piping - High pressure union	5,5 daNm
(7)	nut - Steering ball joint on front hub carrier	8 daNm
(8)	Locknut for adjusting the steering track rods	7 daNm
(9)	bolts - Steering mechanism	11 daNm

GENERAL SPECIFICATIONS : POWER ASSISTED STEERING

1. Steering mechanism

System capacity : 1,5 litre.

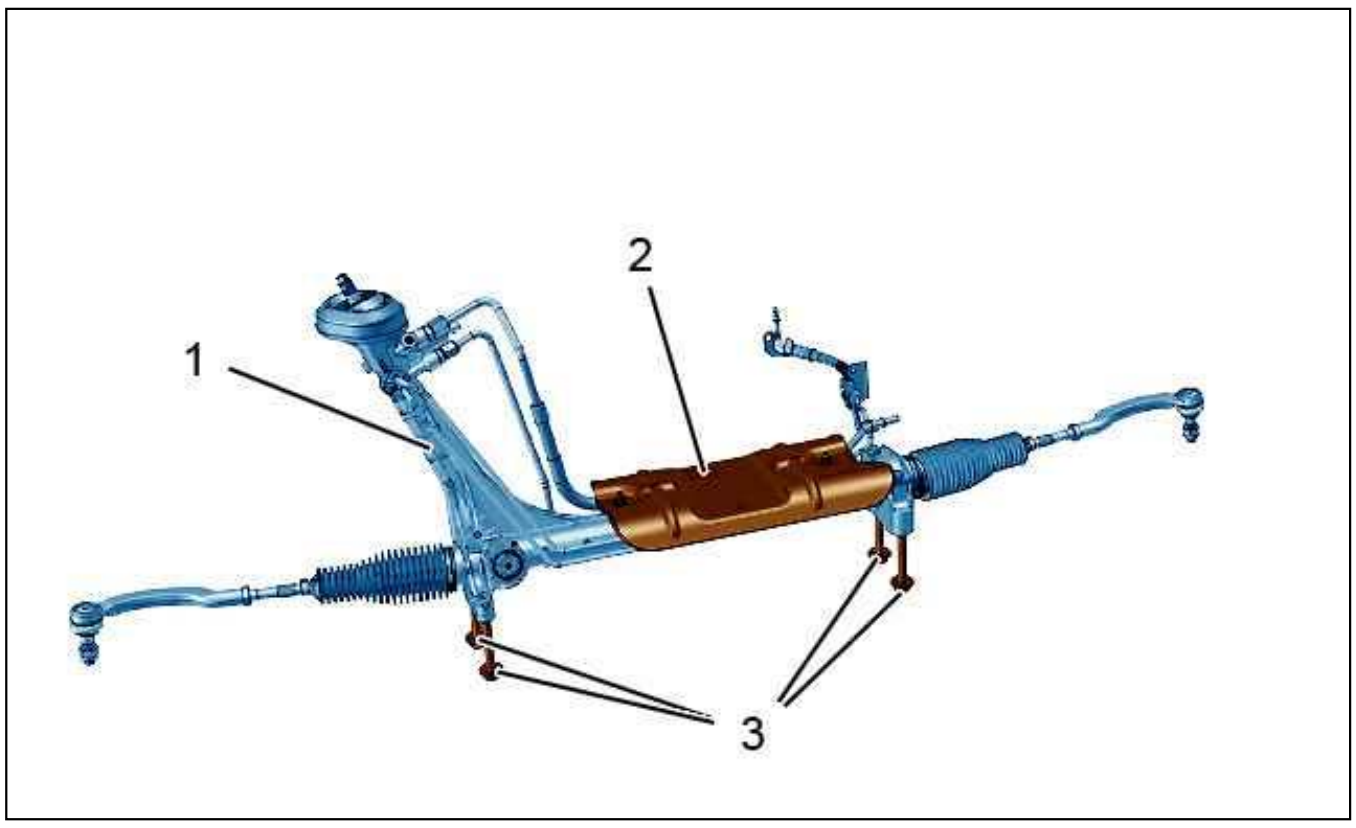

Figure : B3EP19DD

(1) Power steering mechanism with integral ram.
(2) Heat shield.
(3) bolts - Steering mechanism.

Steering rack travel	180 mm
Reduction ratio	1/46,5
Number of turns of steering wheel from lock to lock	3,87
Turning circle between kerbs (Long wheelbase)	14,3 m
Turning circle between kerbs (Medium long wheelbase)	13,5 m
Turning circle between kerbs (Average wheelbase)	12,5 m
Turning circle between kerbs (Short wheelbase)	11,1 m

2. Power steering

2.1. power-assisted steering pump (engine PUMA)

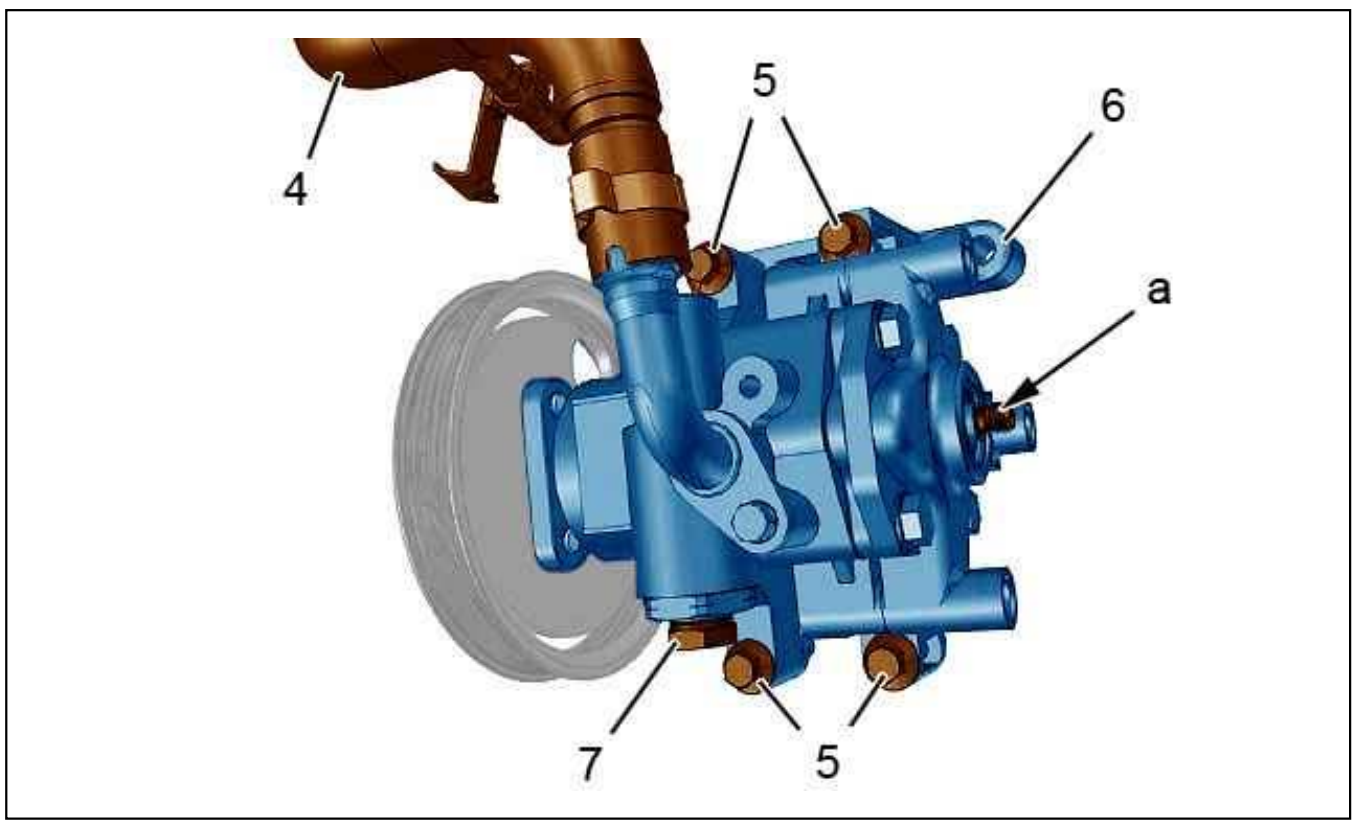

Figure : B3EP19ED

(4) Low pressure pipe.
(5) bolts - power-assisted steering pump.
(6) power-assisted steering pump.
(7) Union of the the high pressure piping .
"a" Drive shaft of the coolant pump .
The power steering pump (6) is fixed on the engine by 4 screws (5).
The power steering pump (6) drives the coolant pump via the coolant pump drive shaft "a".
Maximum pressure : 114 to 4 bars.

Pulley diameter : 133 mm .

2.2. power-assisted steering pump (engine SOFIM)

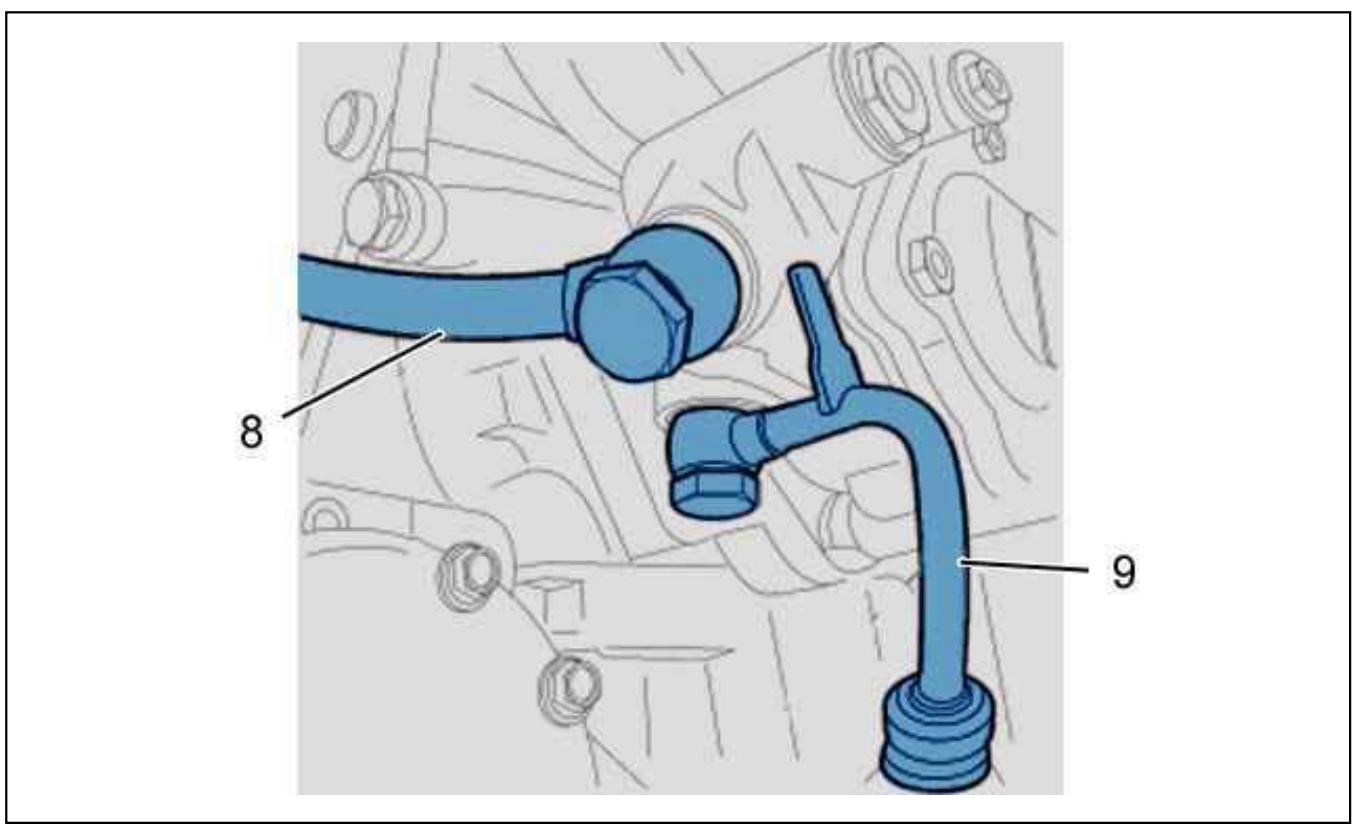

Figure : B3EB036D

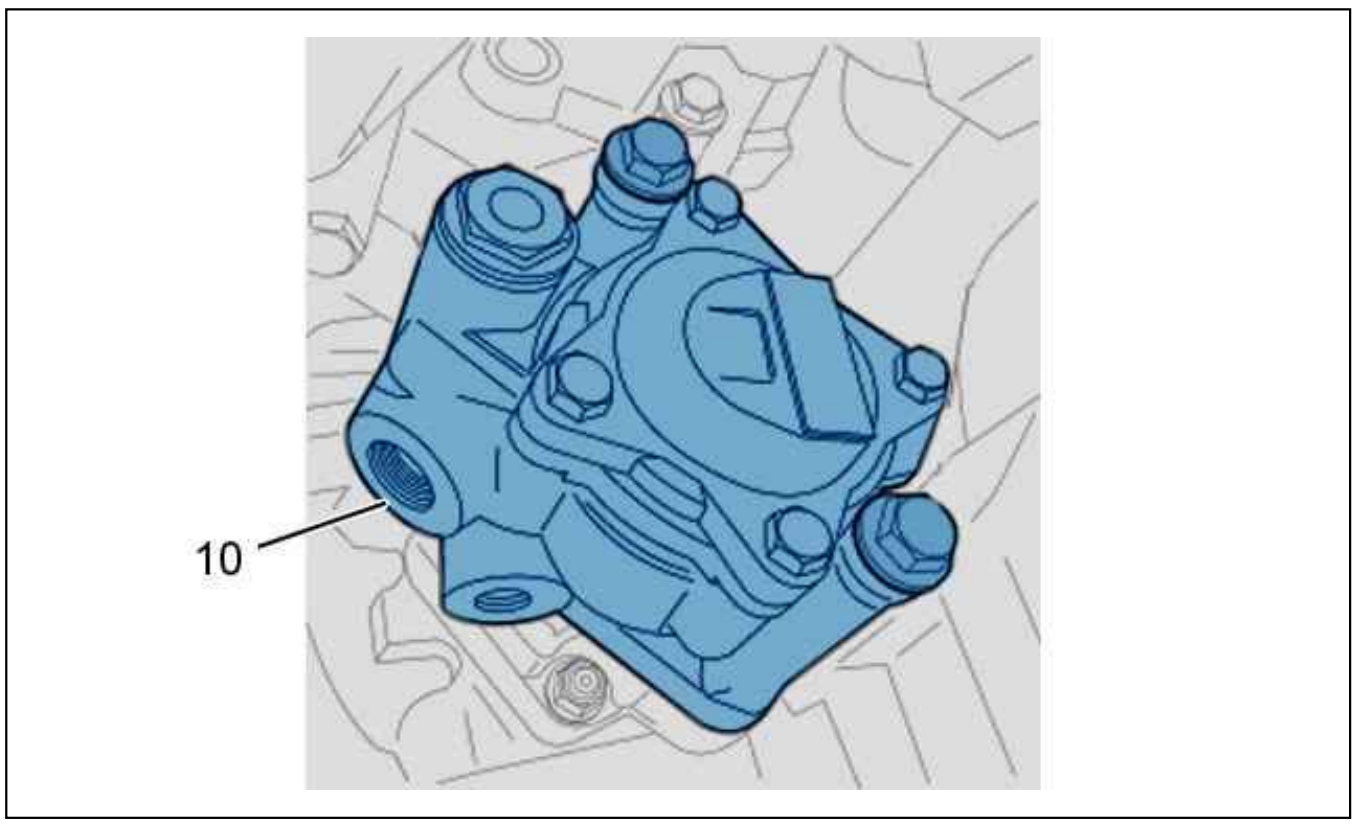

Figure : B3EB039D

(8) Power steering pump supply pipe.
(9) High pressure pipe supplying the power steering control unit.
(10) power-assisted steering pump.
Maximum pressure : 115 to 5 bars.

2.3. Power steering proportional electrovalve

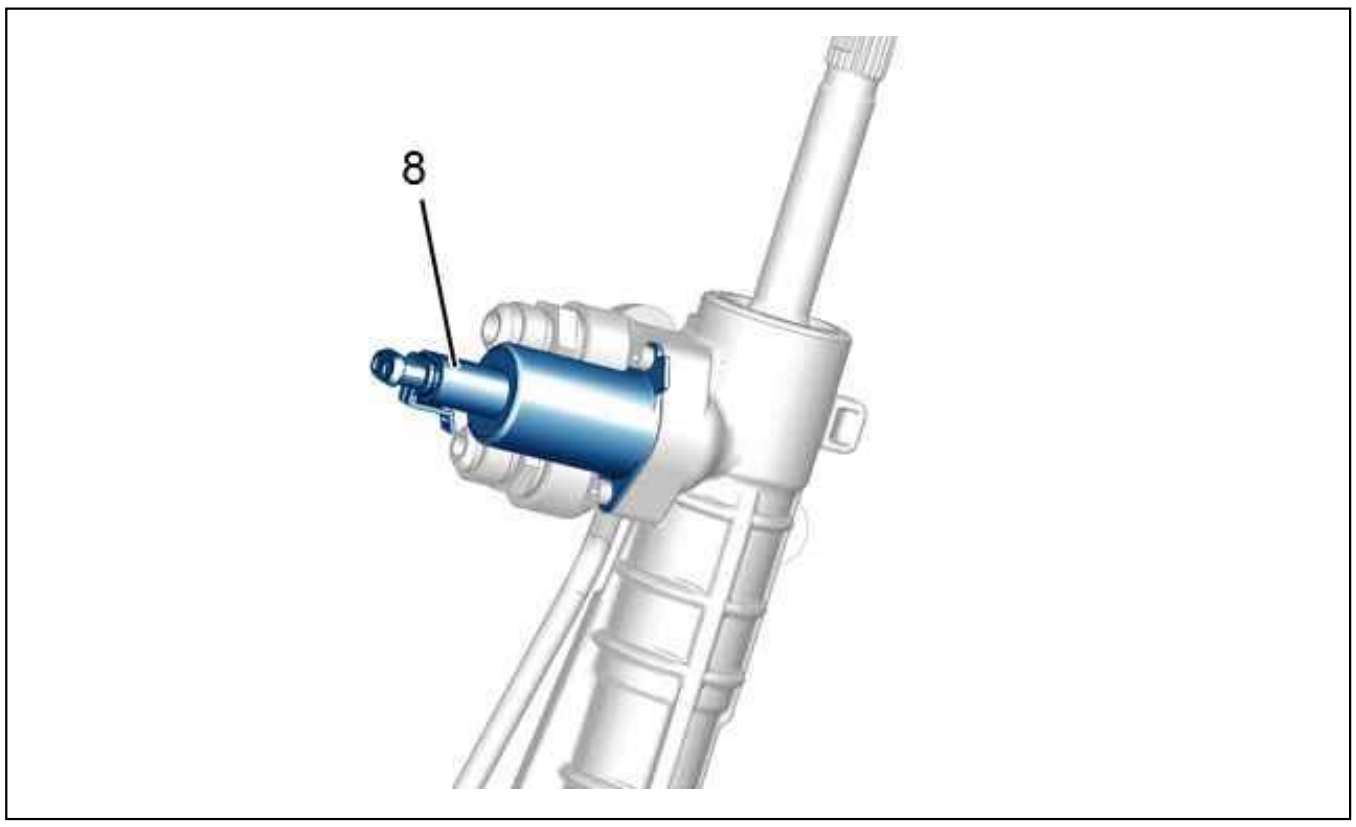

Figure : B3EP19FD

(11) Power steering proportional electrovalve .

The variation in steering assistance is obtained by a power steering proportional electrovalve (11) implanted on the distributor valve (According to specification).

CHECKING AND ADJUSTING VALUES : POWER STEERING

ESSENTIAL : Observe the safety and cleanliness recommendations .

1. Steering pressure check value (Electric pump)

Vehicle not affected.

2. Steering pressure check value (Coupled pump)

RELAY (U9)			
Engine type	Engine badge number	Engine speed	Regulation pressure
SOFIM F30DTE	F1CE0481D	At 1200 rpm and at 1500 rpm	115 to 5 bars
SOFIM F30DTE	F1CE3481DM		
SOFIM F30DTE	F1CE348IN		
SOFIM F30DTE	F1CE348ID		
SOFIM F30DTE	F1CE348IE		

3. Steering pressure check value (Electropump)

Vehicle not affected.

4. Steering column

Vehicle not affected.

5. Power steering oil

Power steering	Country	Type of oil
All vehicles prior to CITROËN C5	All countries	TOTAL fluide ATX : Special oil DEXRON II / GM 6137M
All vehicles from CITROËN C5	All countries	TOTAL FLUIDE DA : Special oil : Type LDS
All vehicles	Very cold country	TOTAL FLUIDE DA : Special oil : Type LDS
C-Crosser	All countries	PSF-2M
NEMO / RELAY 3	All countries	TUTELLA GI/E

CHECK : POWER STEERING PRESSURE

ESSENTIAL : Observe the safety and cleanliness recommendations .

CAUTION : Before performing the steering assistance pressure checks, confirm by means of a prior test that there is an actual lack of assistance.

CAUTION : Only the power steering pump can be checked; the steering (integral ram or distributor valve) is implicated by default.

1. Tooling

Tools	Reference	Designation
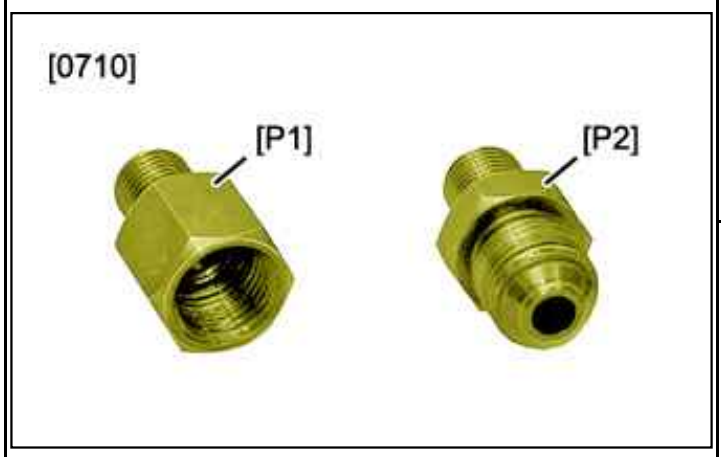 Figure : E5AB0GRT	[0710-P1]	Valve union
	[0710-P2]	High pressure hose union
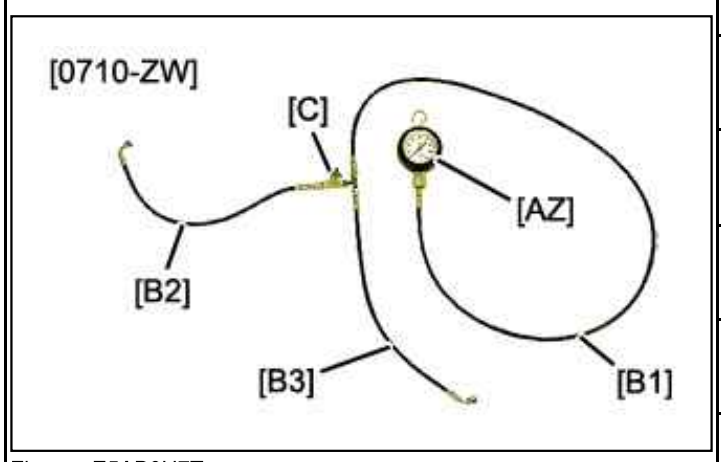 Figure : E5AB0H7T	[0710-ZW]	Power steering pressures checking assembly
	[0710-AZ]	[/] pressure gauge
	[0710-B1]	Pressure gauge checking hose with tap
	[0710-B2]	Checking hose for high pressure hose with tap
	[0710-B3]	Checking hose for high pressure pump with tap
	[0710-C]	[/] three way tap

2. Precautions to be taken

CAUTION : Proceed with care in order to avoid entry of pollutant particles.

N.B. : The correct operation of the device requires the power steering fluid and the hydraulic components to be kept meticulously clean.

Verify :

- The power steering fluid level
- The condition of the hydraulic system piping and connections

3. Setting up the equipment

Place the vehicle on a 4-post lift.
Drain the power steering reservoir .
Raise the vehicle.

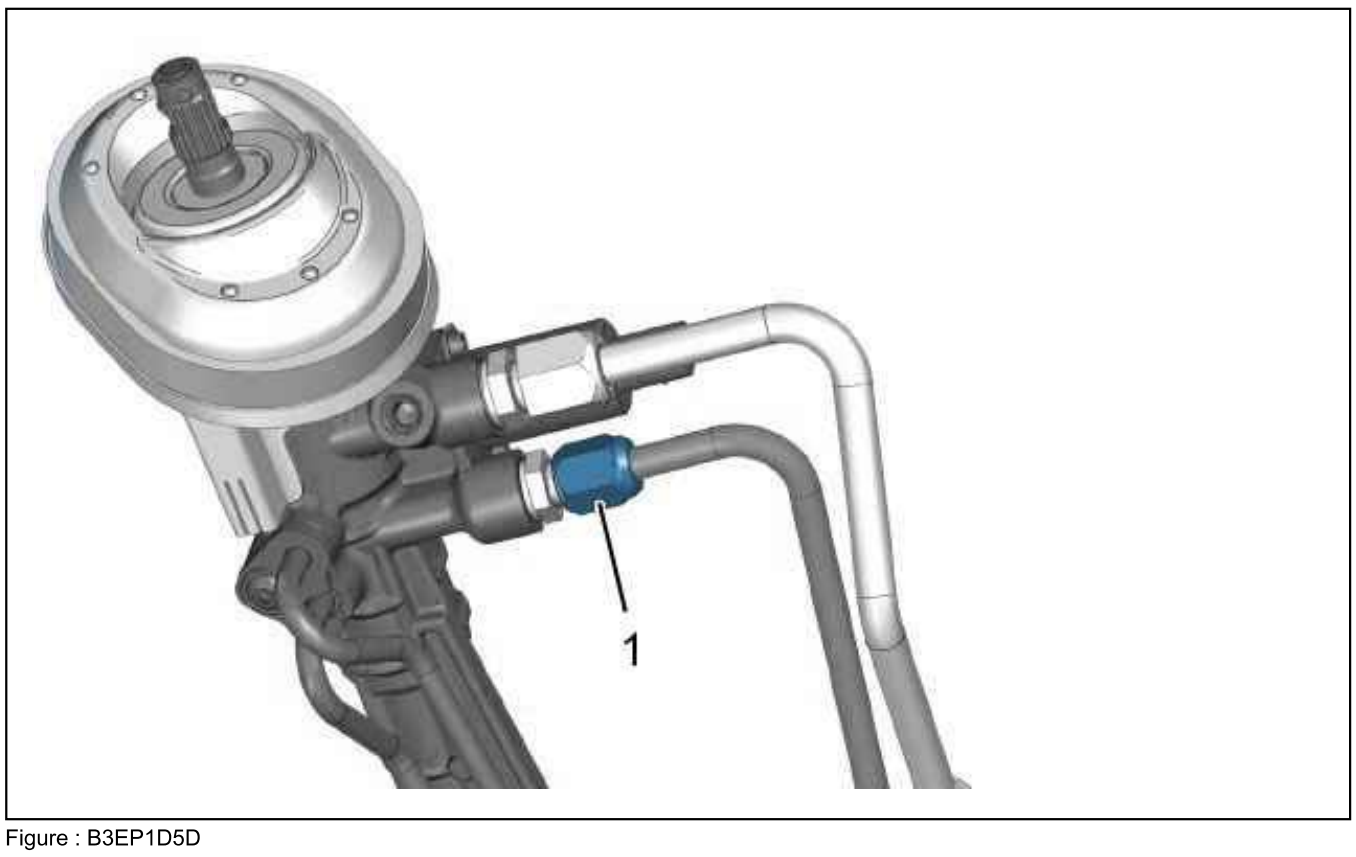

Figure : B3EP1D5D

Unscrew the connector (1) (High pressure piping).

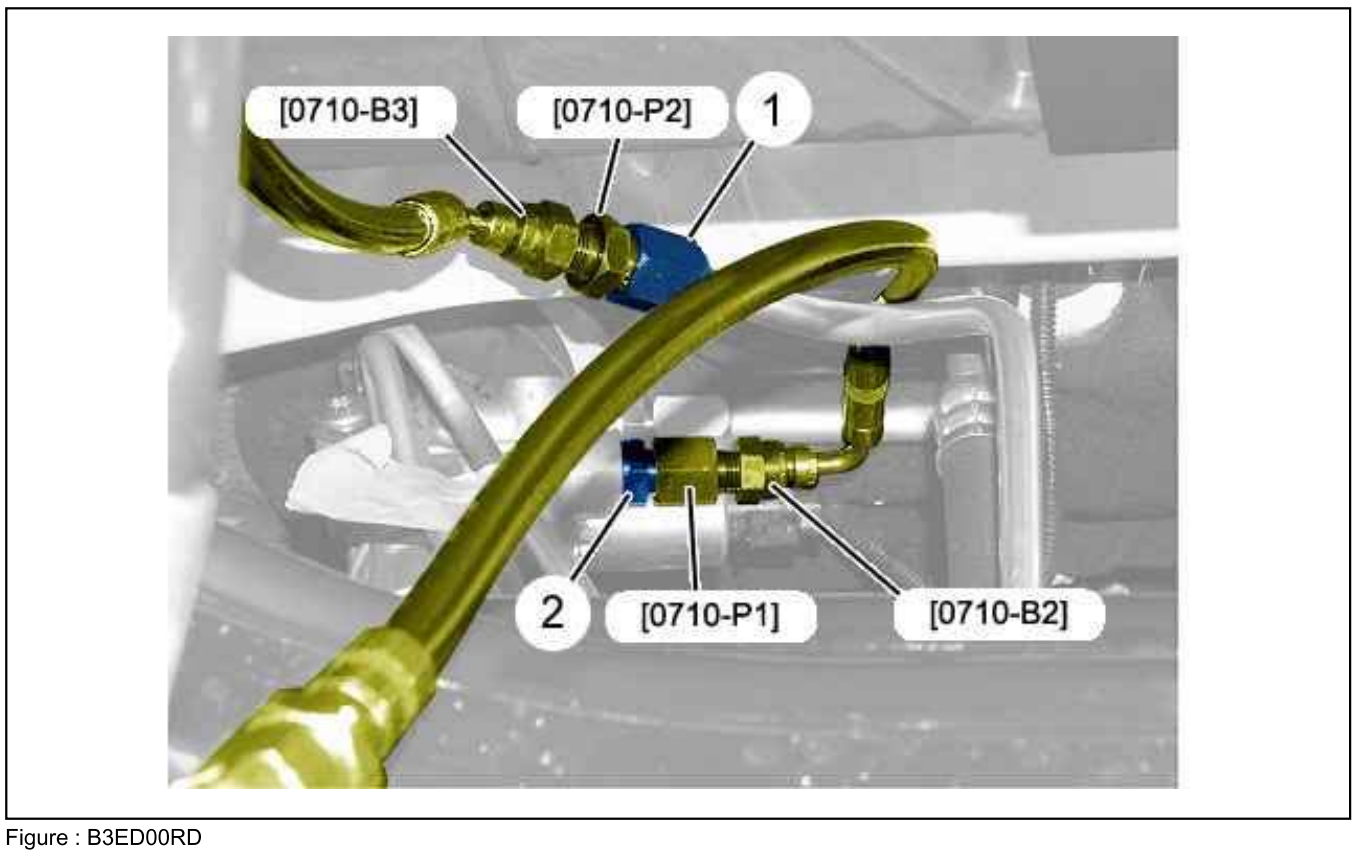

Figure : B3ED00RD

Do up :

- The tool [0710-P1] on the union (2)
- The tool [0710-B3] on the tool [0710-P2]
- The tool [0710-B2] on the tool [0710-P1]
- The tool [0710-P2] on the union (1) (High pressure piping)

4. Checking the power steering pump

Fill the power steering fluid reservoir to the maximum level.

N.B. : Power steering fluid : TUTELLA GI/E.

Open the three-way tap [0710-C].
Turn the steering mechanism from lock to lock several times.
Top up the power steering fluid to the maximum level.
Start the engine.
Check that there are no leaks.

CAUTION : Do not close the three-way tap [0710-C] for longer than 10 seconds.

Close the three-way tap [0710-C].
Read the pressure value indicated on the pressure gauge as soon as the fluid stops from escaping.
The pressure should be :

- 114 to 4 bars (2,2 litre engine)
- 115 to 5 bars (3 litre engine)

Open the three-way tap [0710-C].
Stop the engine.
Pressure not correct : Replace the power steering pump.
Power steering pump pressure correct : The problem comes from the steering mechanism.

N.B. : After confirming an actual lack of power-assistance (by prior test), change the power steering mechanism.

5. Returning the vehicle to standard

Remove :

- Tools [0710-B2] and [0710-B3]
- Tools [0710-C] and [0710-AZ]
- Tools [0710-P1] and [0710-P2]

CAUTION : Adhere to the tightening torques .

Tighten the connector (1) (High pressure piping).
Fill and bleed the power steering circuit .

TIMING : STRAIGHT-ON POSITION OF STEERING RACK

ESSENTIAL : Respect the precautions to be taken before repair.

1. Recommended tools

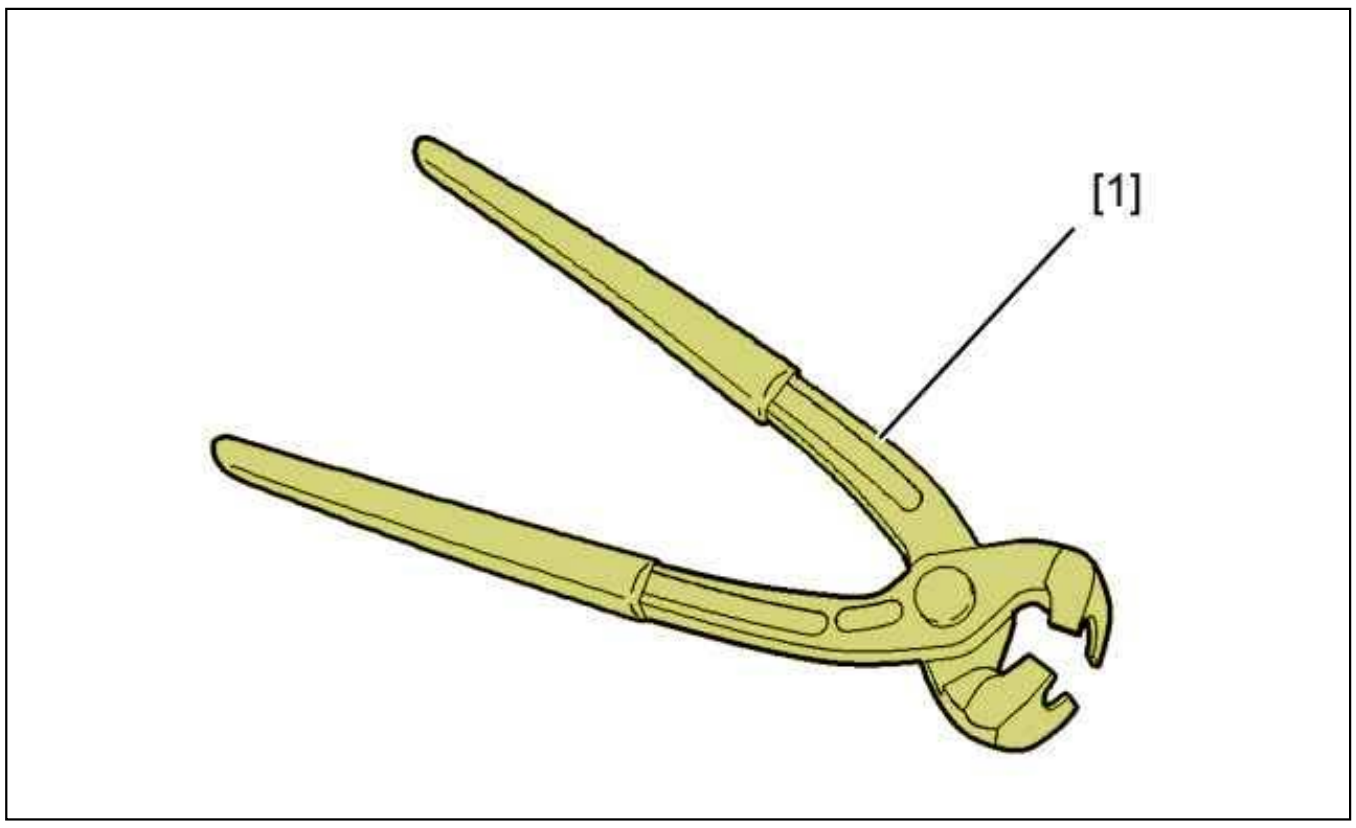

Figure : E5AP2XQD

[1] OETIKER clip pliers (-).1615.

2. Preliminary operations

Release the front wheel bolts.
Lift and support the vehicle with front wheels suspended.
Remove the front wheels.

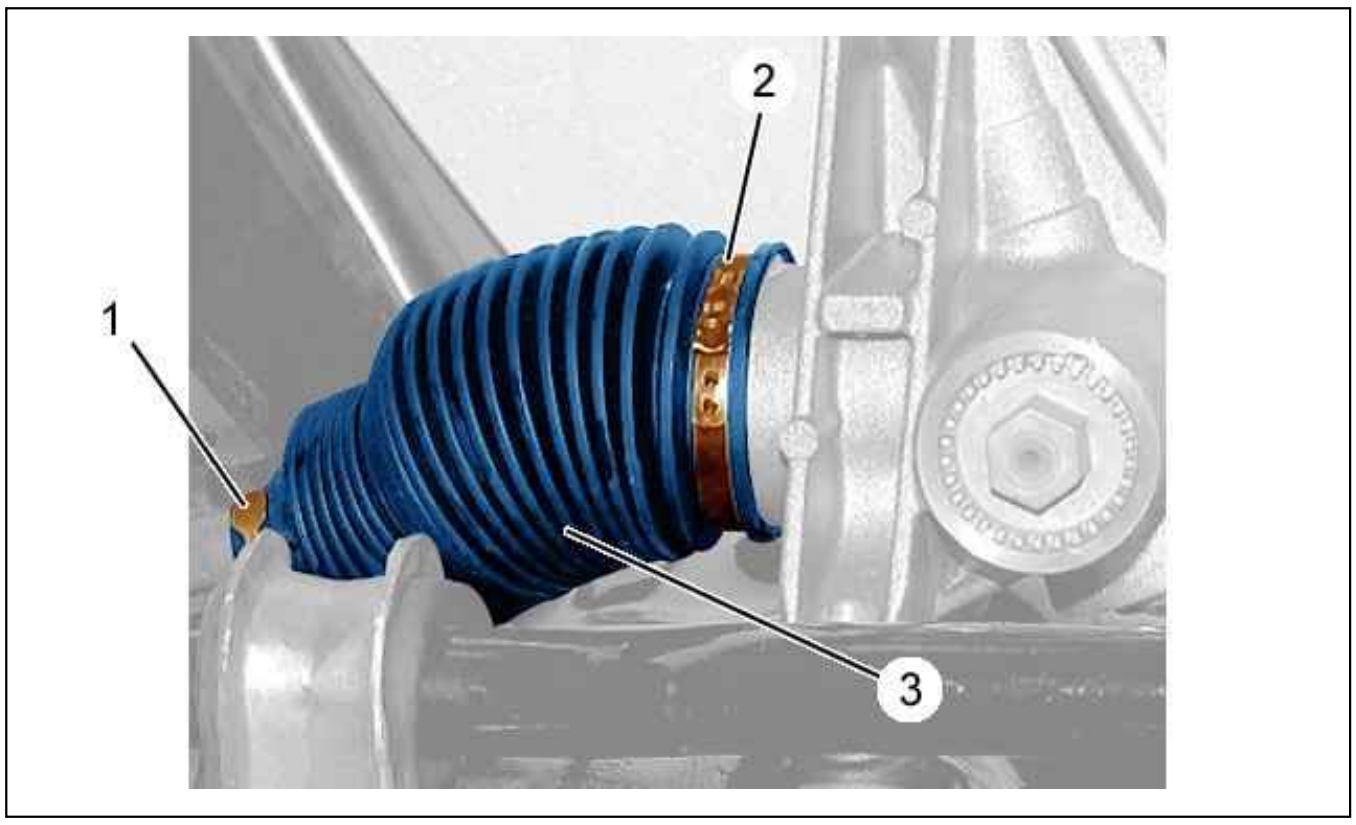

Figure : B3EP18GD

Remove (left side) :

- The clip (1)
- The clip (2)

Remove the steering rack protection gaiter (3).

3. Timing

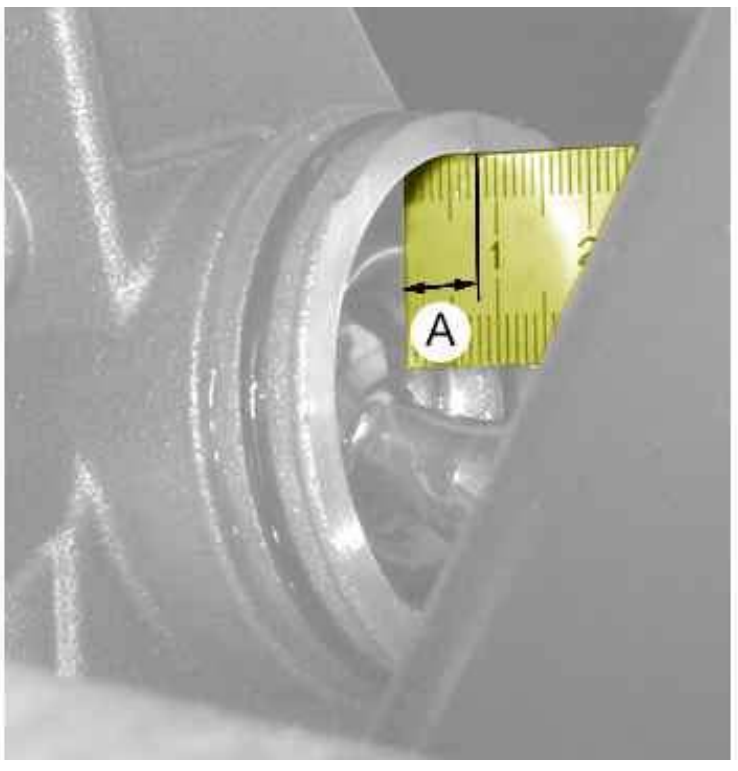

Figure : B3EP18HD

Turn the steering wheel to left hand full lock.
Measure dimension A.

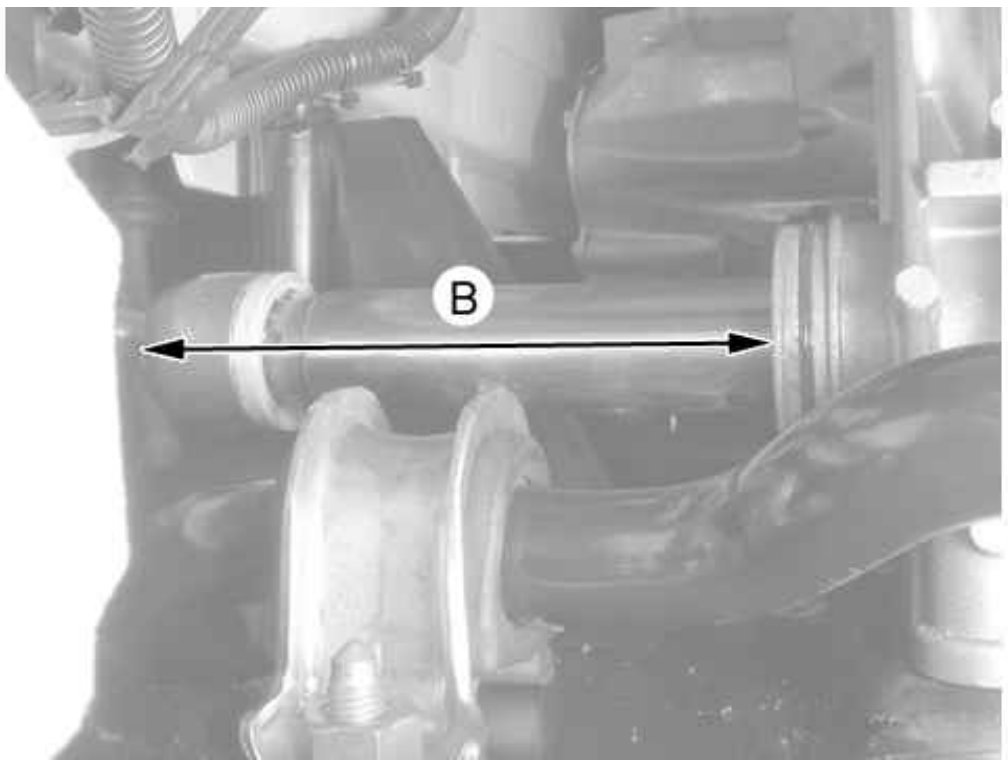

Figure : B3EP18JD

Turn the steering wheel to right hand full lock.
Measure dimension B.

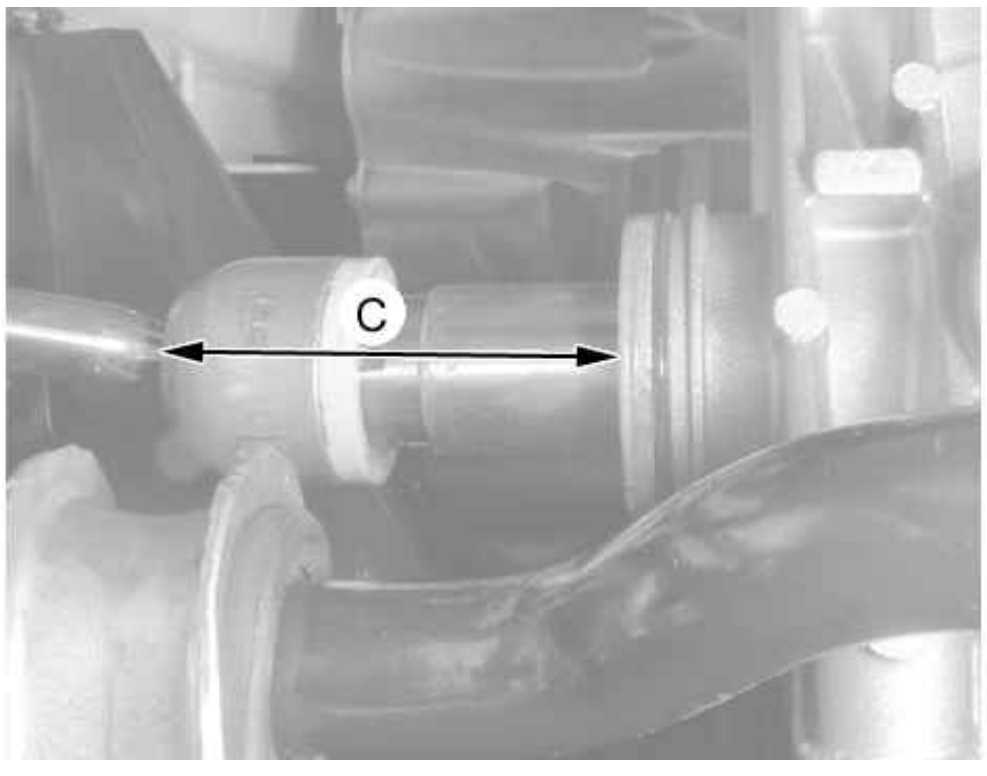

Figure : B3EP18KD

Calculate the dimension C = (A + B) : 2.
Position the steering rack to dimension "C" (mid point of the rack).

4. Additional operations

Refit :

- The protective gaiter (3)
- A new clamping collar (2) ; Using tool [1]
- The clip (1)
- The wheels

Return the vehicle to its wheels.

Tighten the wheel bolts .

REMOVING - REFITTING : STEERING MECHANISM

ESSENTIAL : Observe the safety and cleanliness recommendations .

1. Tooling

Equipment : Lifting tool .

tool	Reference	Designation
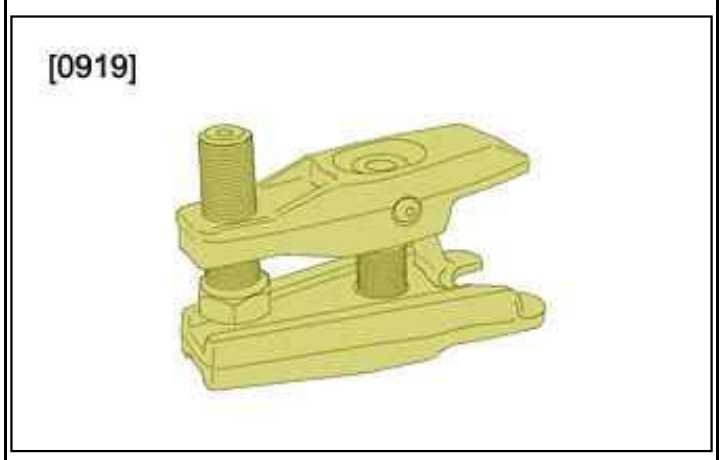 Figure : E5AB0ZPT	[0919]	ball-joint extractor

2. Removing

Disconnect the battery negative terminal.
Untighten the wheel screws (front).
Lift and support the front of the vehicle.
Remove :

- The front wheels
- The protection plates under the engine

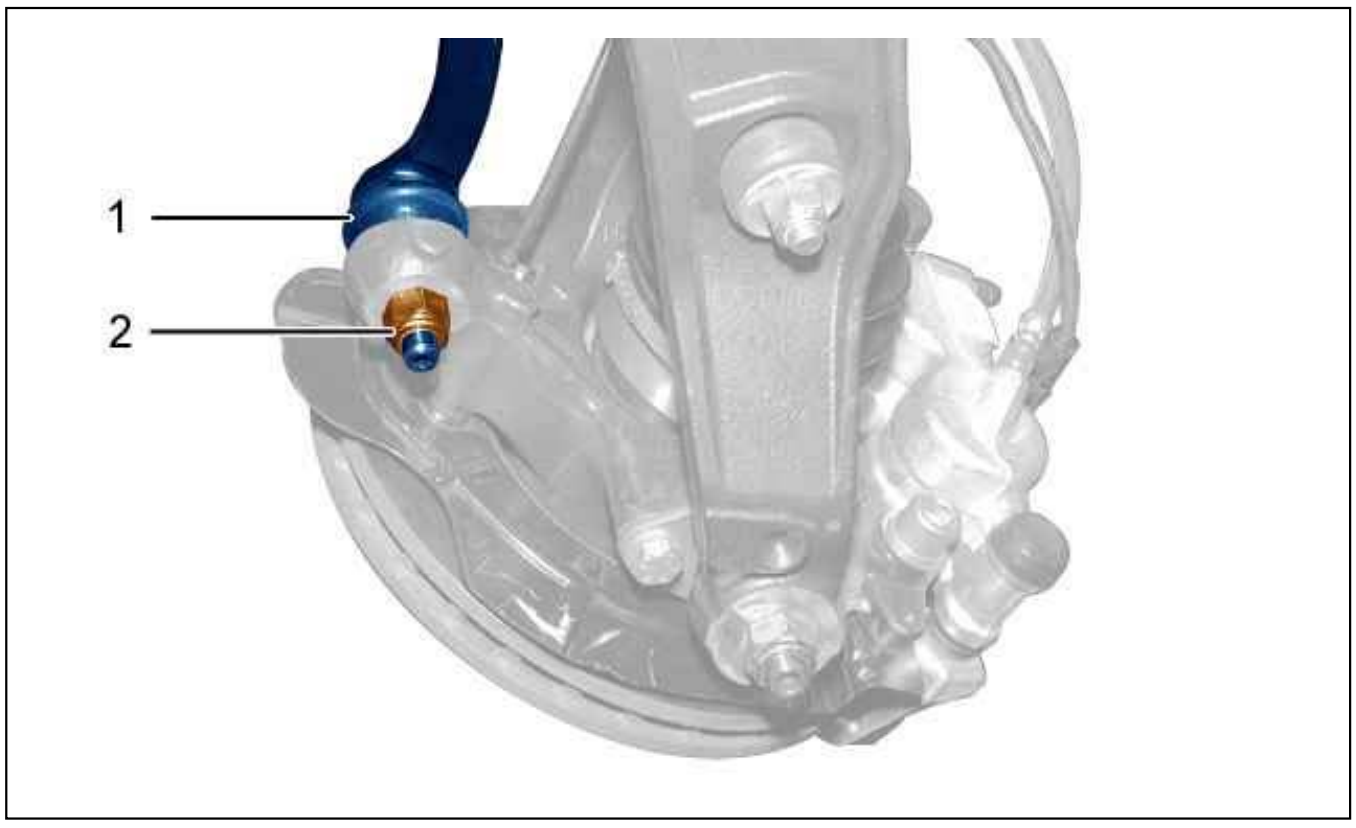

Figure : B3EG0JQD

Remove the nut (2) (on each side).
Uncouple the steering ball-joint (1) ; Using tool [0919] (on each side).

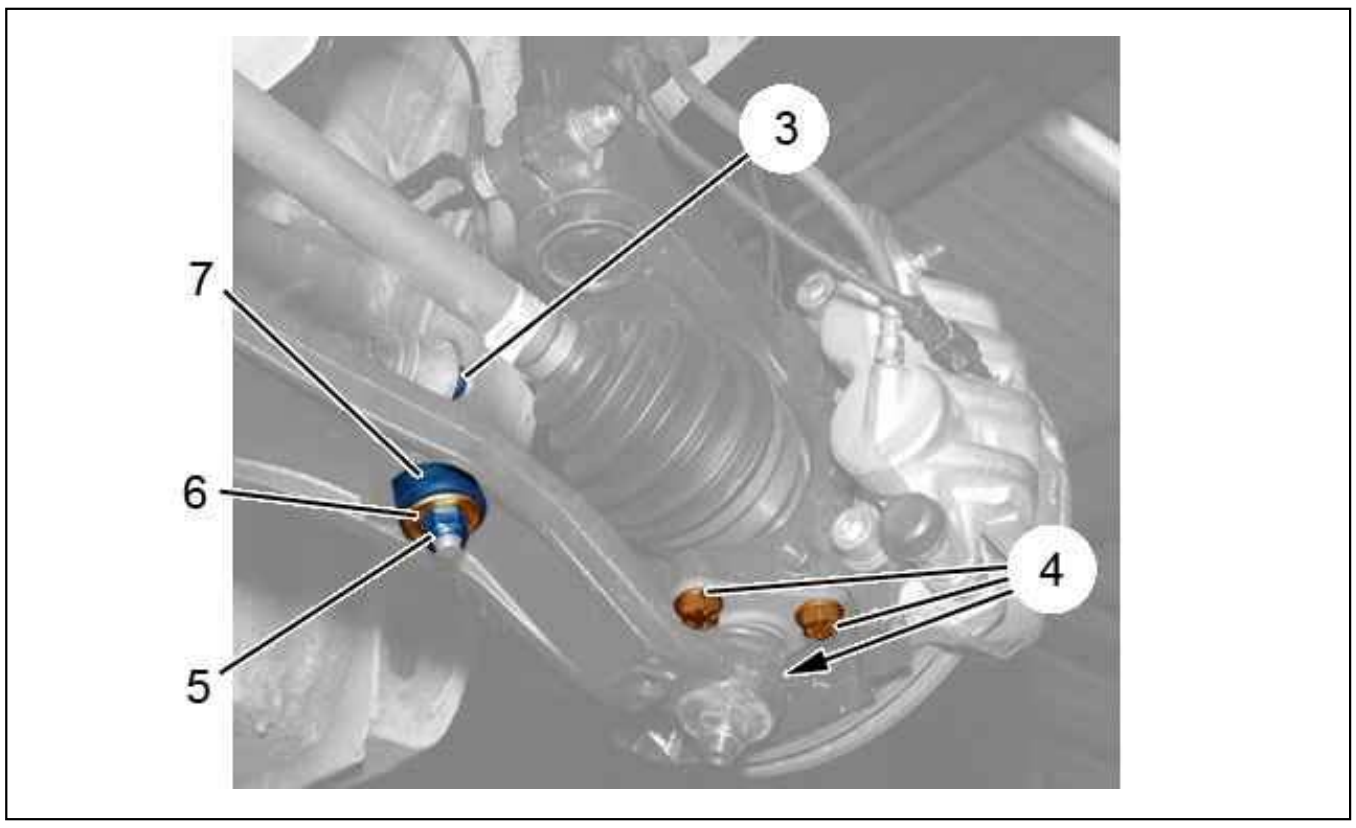

Figure : B3BP1CPD

Unscrew nut (3) (on each side).
Remove (on each side) :

- The nut (5)
- The washer (6)
- The silentblock (7)
- The 3 bolts (4)

Release : The pivot lower ball-joint (on each side).
Drain the steering assistance circuit .

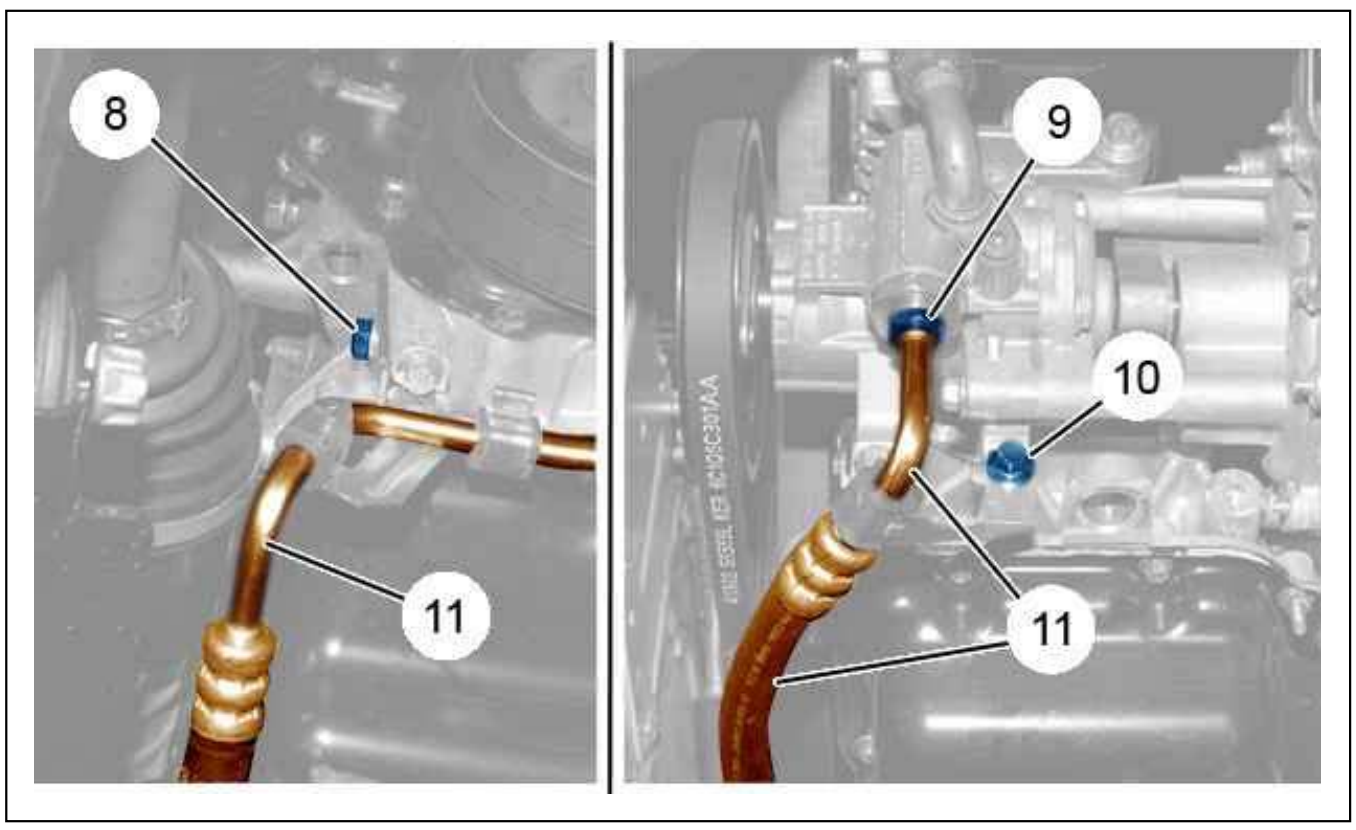

Figure : B1BPSG1D

Uncouple the high pressure pipe union (9).
Remove the bolts (8), (10).
Move aside the piping (11) without distorting it.

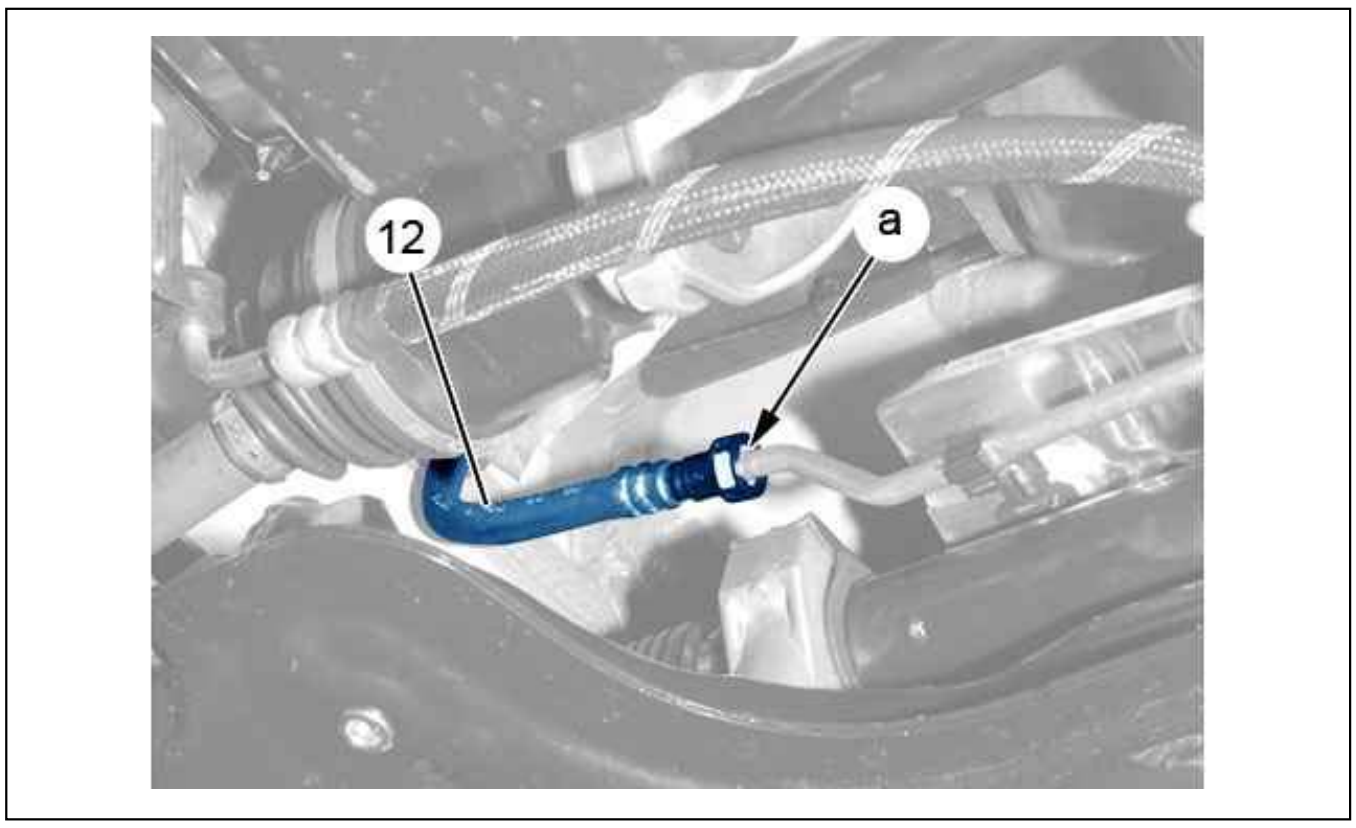

Figure : B3EG0JRD

Uncouple : The low pressure pipe (12) (at "a").
Plug the hydraulic unit unions ; Using plugs .
Disconnect the power steering regulated electrovalve connector (if necessary).

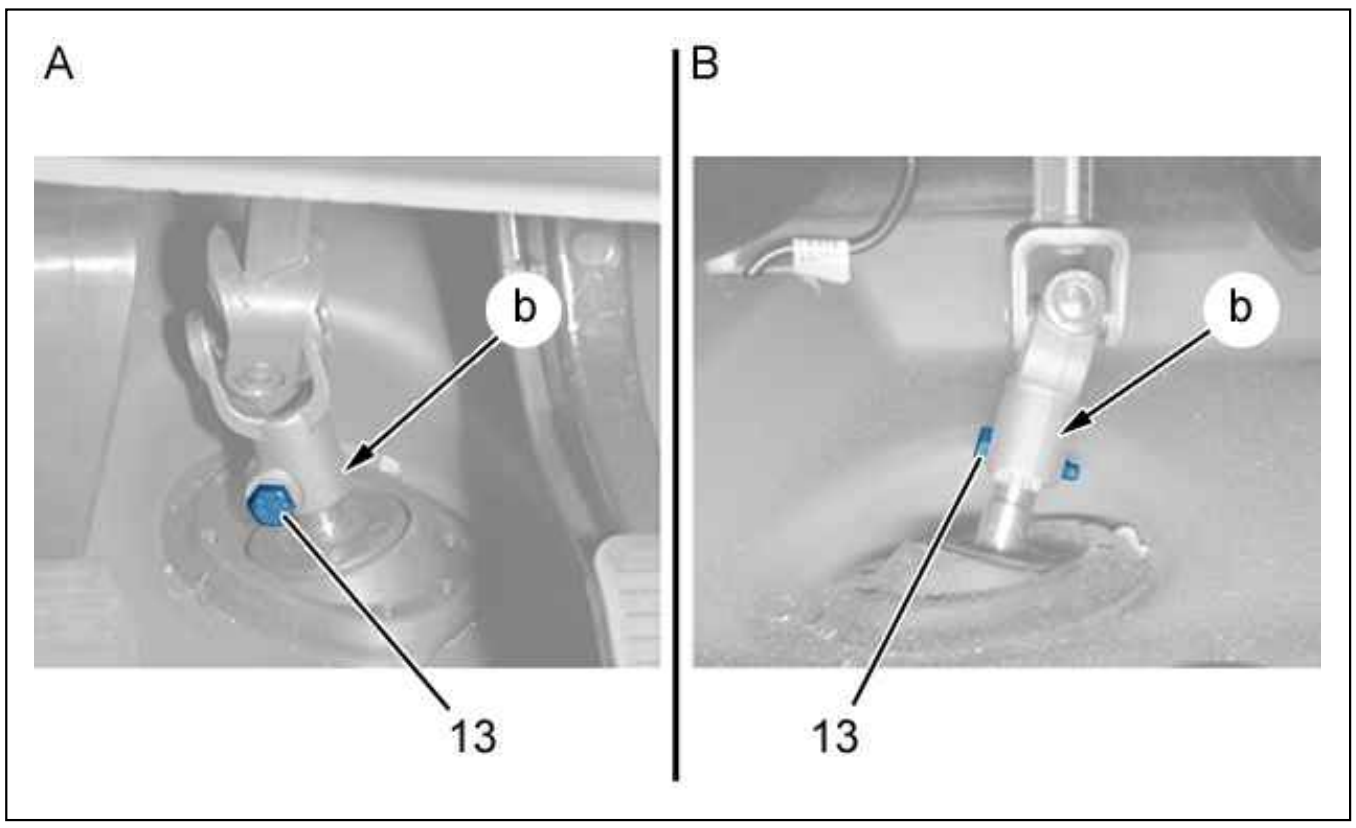

Figure : B3EG0JSD

Fitting A : Left-hand drive .
Fitting B : Right-hand drive .
Remove bolts (13).
Disengage and push the lower part of the steering column upwards (at "b").

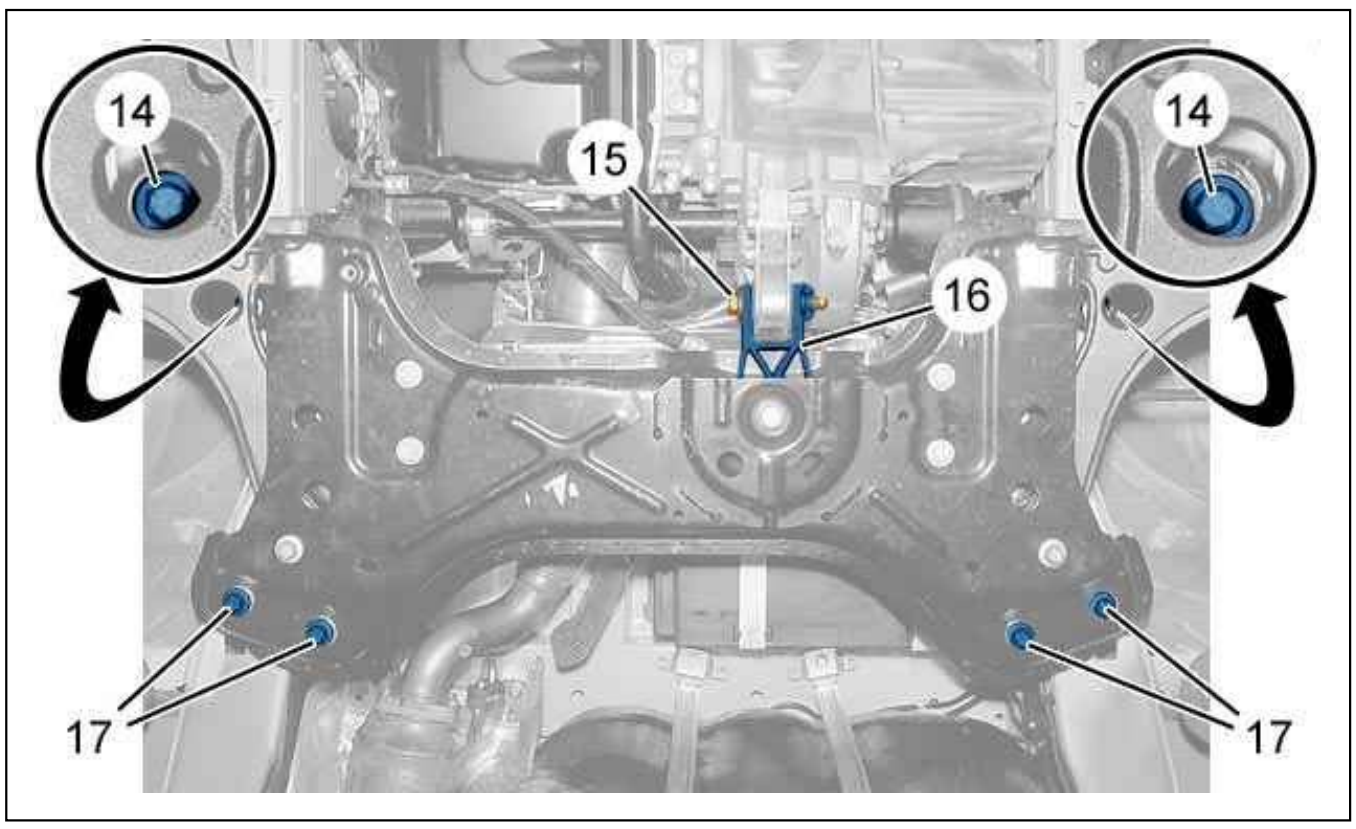

Figure : B3EG0JTD

Remove the bolt (15).

Move aside the torque reaction rod (16) from the front subframe.
Position a lifting tool to retain the front sub-frame.
Remove :

- The bolts (14)
- The bolts (17)
- The front subframe and steering mechanism assembly

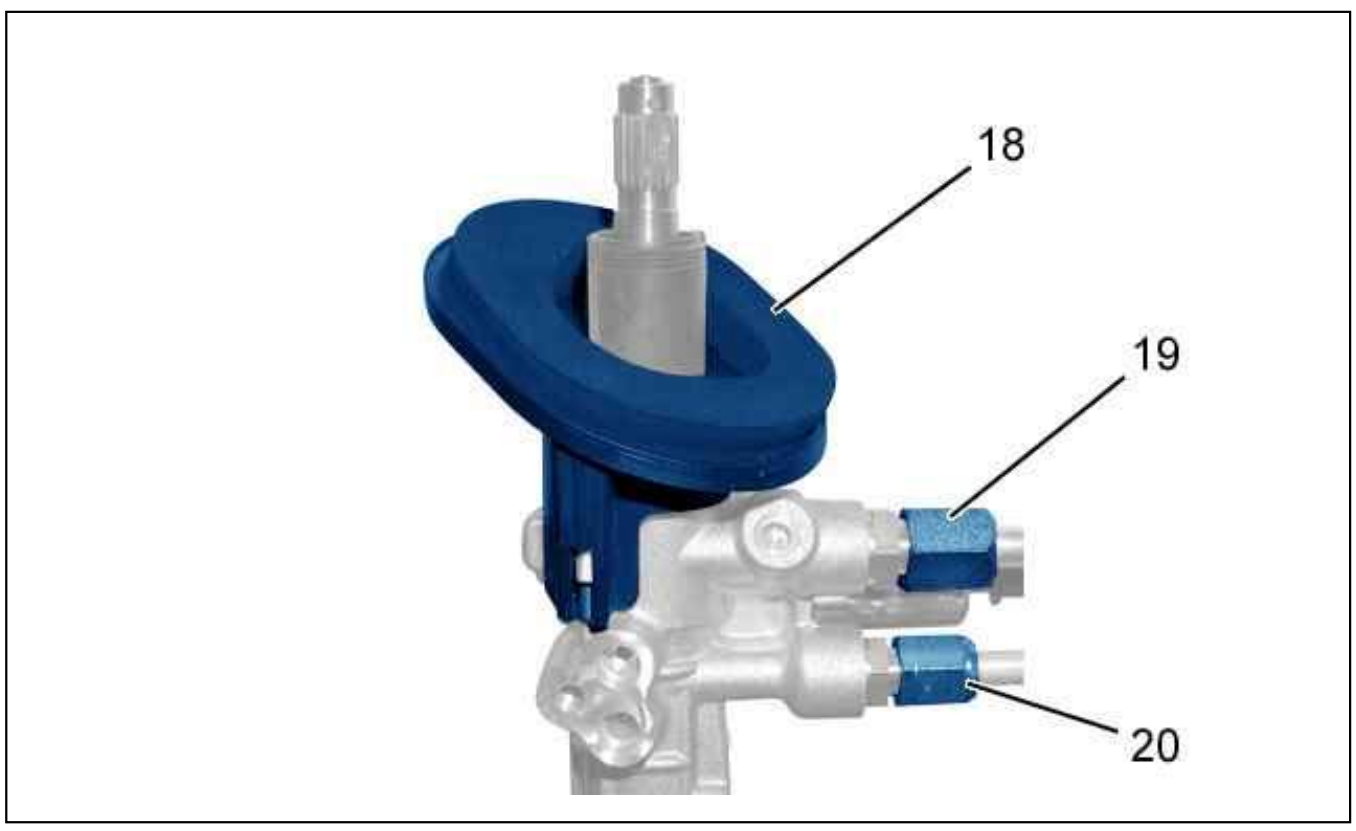

Figure : B3EG0JUD

Remove the protector (18).
Uncouple :

- The high pressure pipe union (20)
- The low pressure pipe union (19)

Remove :

- The thermal protector
- The high pressure pipe (11)
- The low pressure pipe (12)

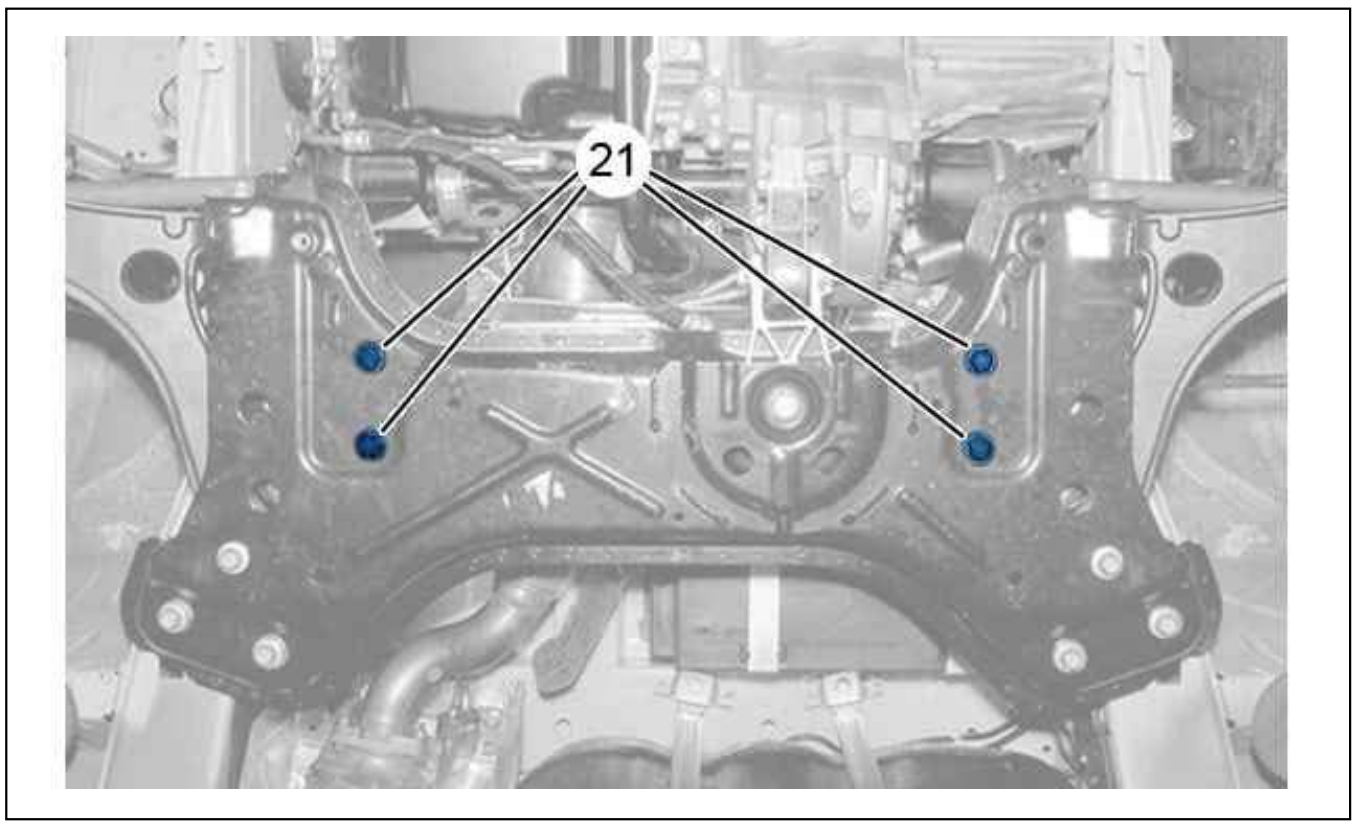

Figure : B3EG0JVD

Remove the bolts (21).
Uncouple the steering mechanism.

3. Refitting

CAUTION : Adhere to the tightening torques.

Tightening torques :

- Front suspension
- Power steering

N.B. : Always fit new Nylstop nuts.

Couple the steering mechanism.
Refit the bolts (21).
Remove the protector (18) (new).
Refit :

- The low pressure pipe (12)
- The high pressure pipe (11)
- The thermal protector

Couple up :
- The high pressure pipe union (20)
- The low pressure pipe union (19)

Position the front subframe and steering mechanism assembly on the body.
Refit :
- The bolts (17)
- The bolts (14)

Engage the torque reaction rod (16) on the front sub-frame.
Refit bolt (15).
Couple up :
- The low pressure pipe (12) (at "a")
- The high pressure pipe union (9)

Refit :
- The bolt (8)
- The bolt (10)

Connect the power steering regulated electrovalve connector (if necessary).
Position the hub carrier lower ball joint (on each side).
Refit (on each side) :
- The 3 bolts (4)
- The silentblock (7)
- The washer (6)
- The nut (5)
- The nut (3)

Couple up the steering ball-joint (1) (on each side).
Refit the nut (2) (on each side).
Couple the lower part of the steering column (at "b").
Refit the new screw (13) (Pre-coated with a thread-locking product).
Fit the wheels.
Return the vehicle to its wheels.
Tighten the wheel bolts .

CAUTION : Perform the operations to be carried out following reconnection of the battery.

Reconnect the battery negative terminal.
Fill and bleed the power steering system .

REMOVING - REFITTING : ROTARY CONNECTOR (ESP STEERING ANGLE)

ESSENTIAL : Observe the safety and cleanliness recommendations.

1. Removing

1.1. Rotary connector

Disconnect the battery.
Put the wheels in the straight ahead position.
Push back the steering wheel as far as it will go.
Remove the steering wheel (see the relevant operation).



Figure : C5FP0YPD

Remove lower panel (1) (see the relevant operation).

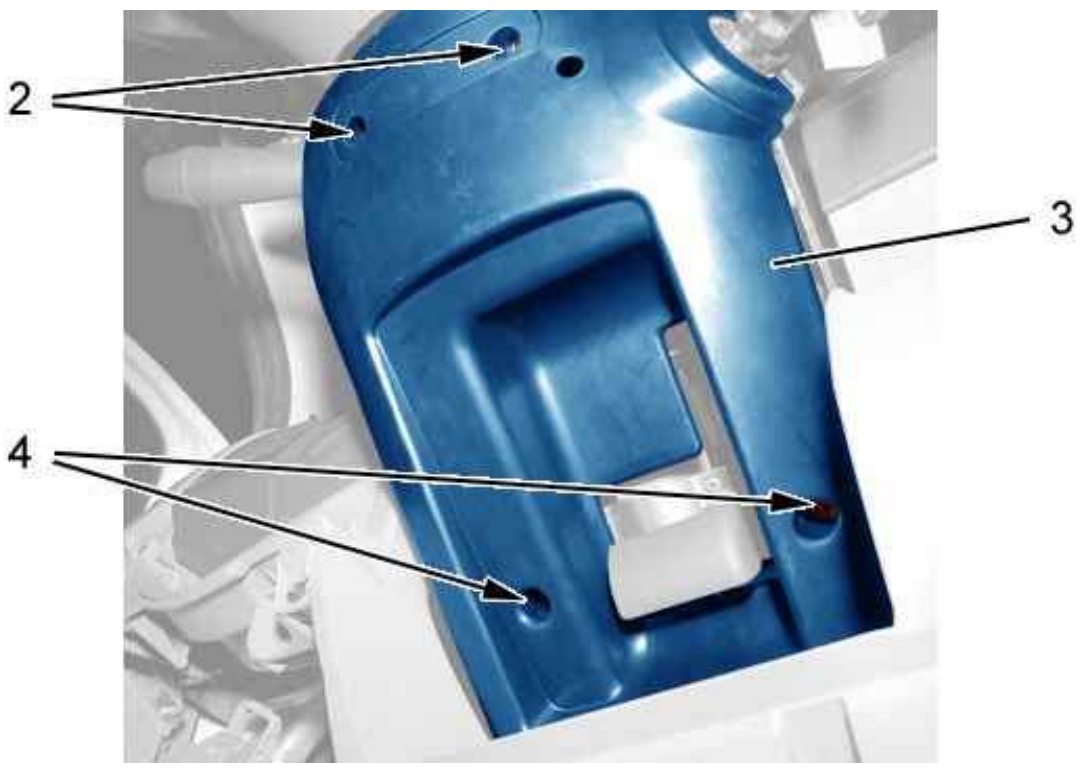

Figure : C5FP0YQD

Remove :

- The bolts (2)
- The bolts (4)
- The lower trim on the steering column (3)

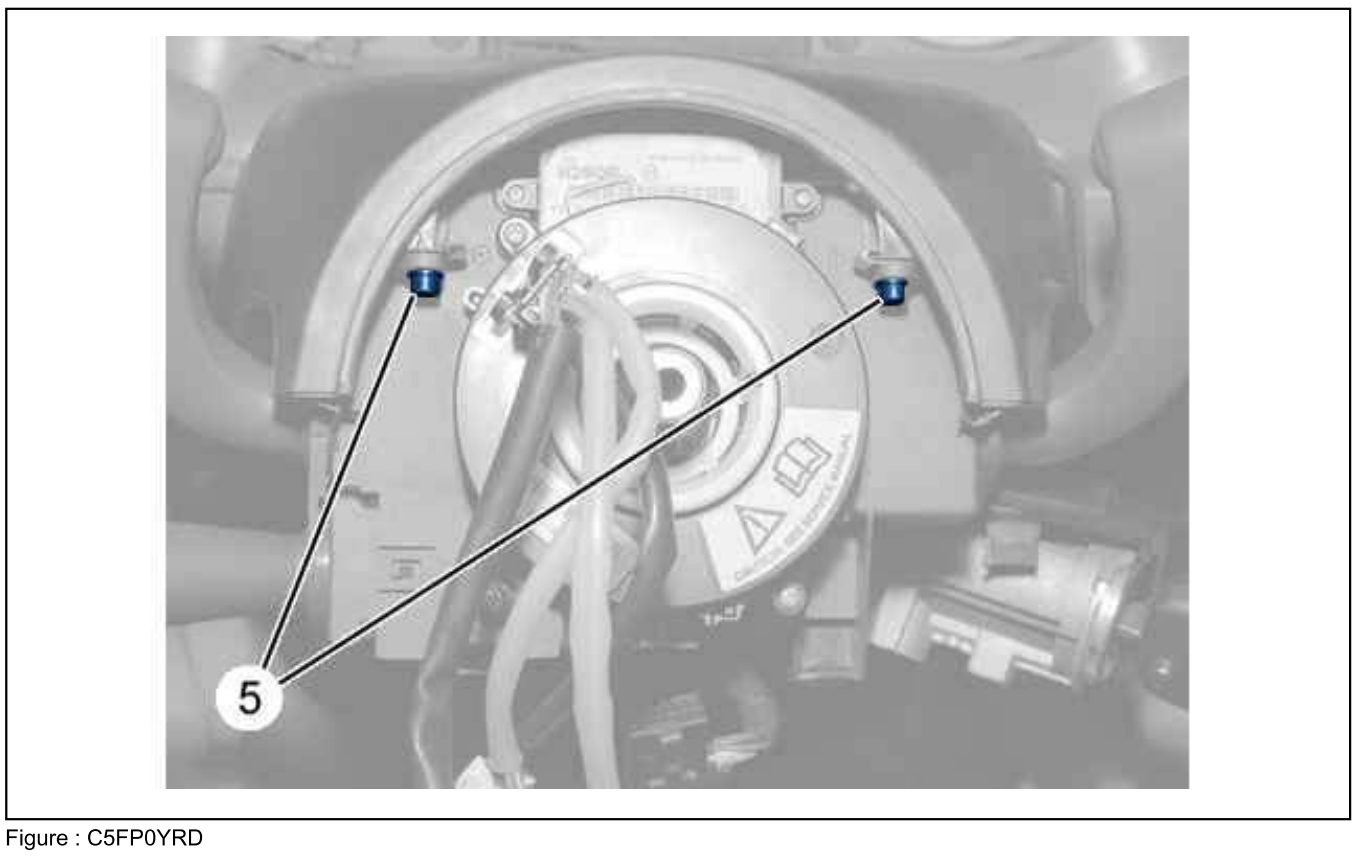

Figure : C5FP0YRD

Remove the bolts (5).

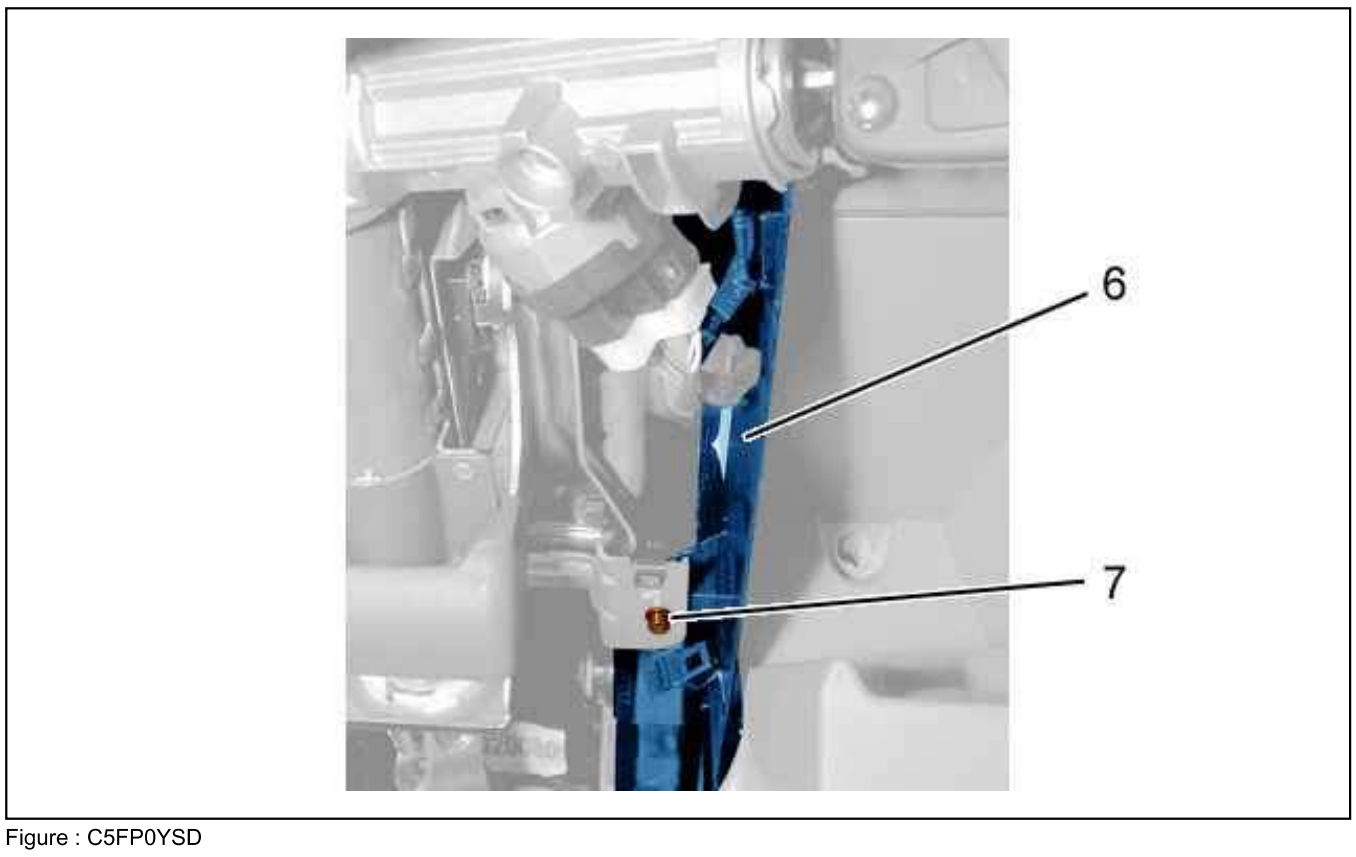

Figure : C5FP0YSD

Remove :

- The (7) bolt
- The steering column upper cowling (6)

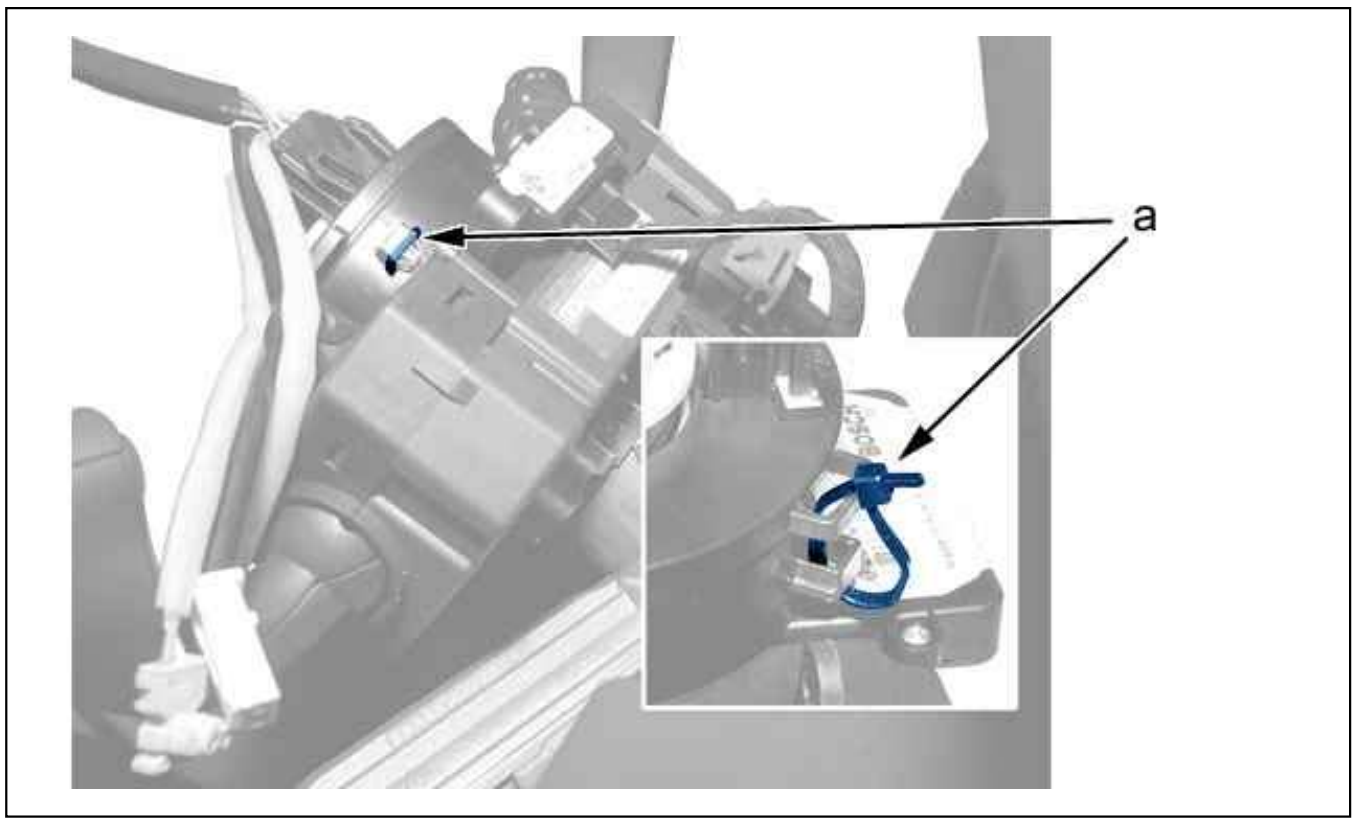

Figure : C5FP0YTD

Fit a plastic collar to maintain the position of the rotary switch (at "a").

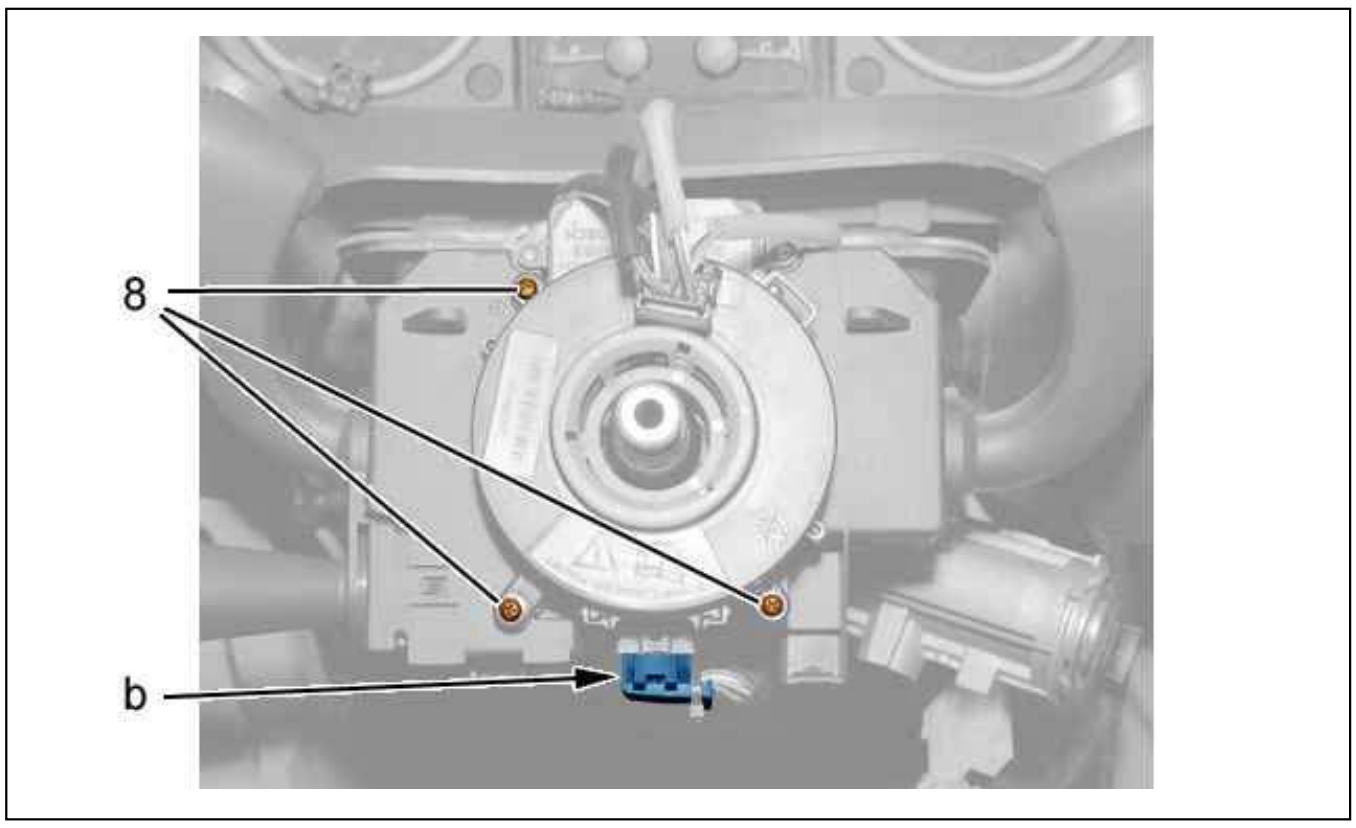

Figure : C5FP0YUD

Disconnect the connector "b".
Remove :

- The 3 bolts (8)
- The rotary connector

1.2. Steering wheel angle sensor

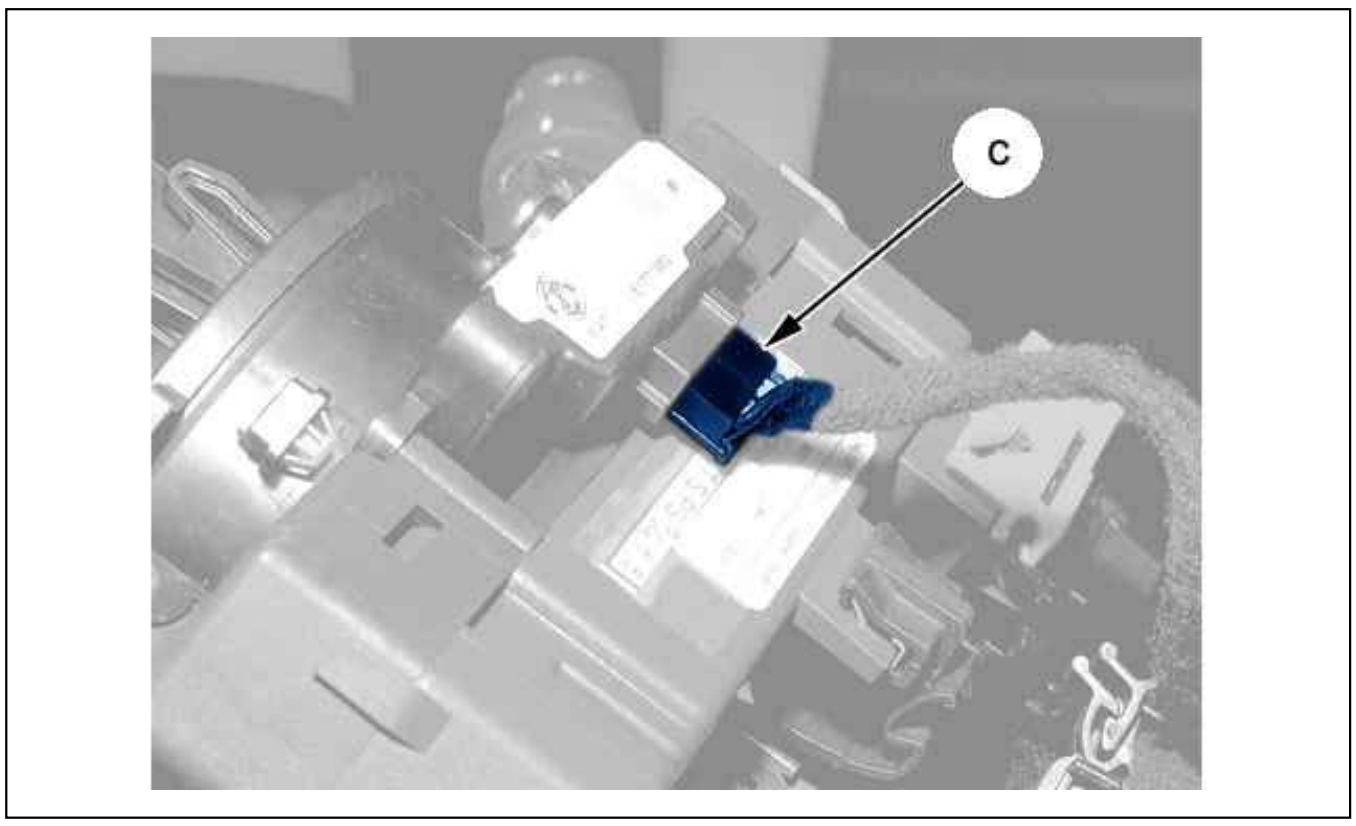

Figure : C5FP0YVD

Disconnect the connector "c".

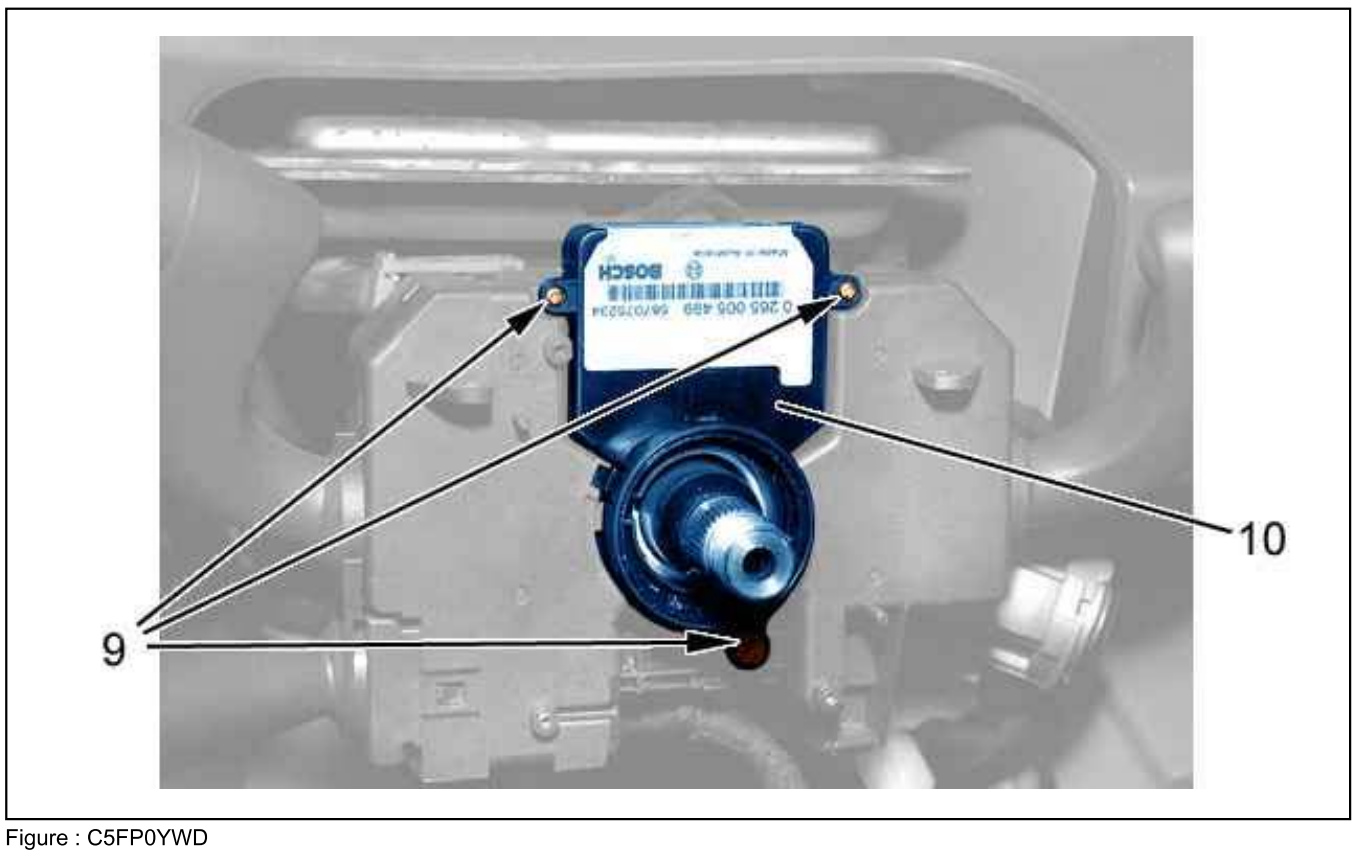

Figure : C5FP0YWD

Remove :

- The 3 bolts (9)
- The steering wheel angle sensor (10)

2. Refitting

2.1. Steering wheel angle sensor

Refit the steering wheel angle sensor (10).
Refit and tighten the 3 screws (9).
Connect the connector "c".

2.2. Rotary connector

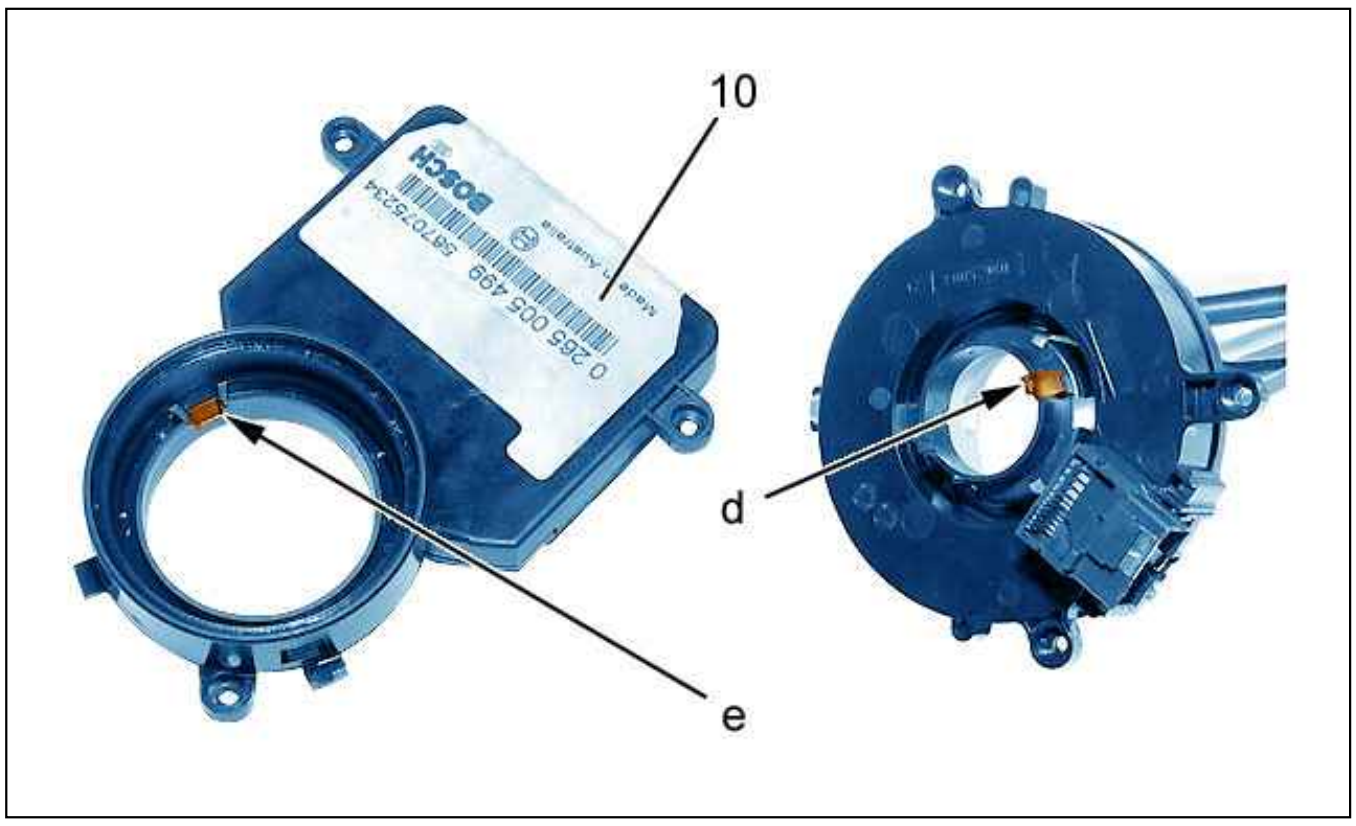

Figure : C5FP0YXD

Position the rotary switch on the controls under the steering wheel.

N.B. : Align the failsafe " d " with the groove " e " on the steering wheel angle sensor (10).

Refit and tighten the 3 screws (8).
Connect the connector "b".
Cut and remove the plastic collar.
Refit :

- The steering column upper cowling (6)
- The (7) bolt ; Tighten to 0,2 ± 0,02 daN.m
- The bolts (5) ; Tighten to 0,2 ± 0,02 daN.m
- The lower trim on the steering column (3)
- The bolts (2) ; Tighten to 0,2 ± 0,02 daN.m
- The bolts (4) ; Tighten to 0,2 ± 0,02 daN.m
- The lower panel (1) (see the relevant operation)
- The steering wheel (see the relevant operation)

Reconnect the battery.
Check that the steering wheel electrical controls operate correctly.

REMOVING - REFITTING : STEERING WHEEL

ESSENTIAL : Observe the safety and cleanliness recommendations.

1. Removing

Disconnect the battery.

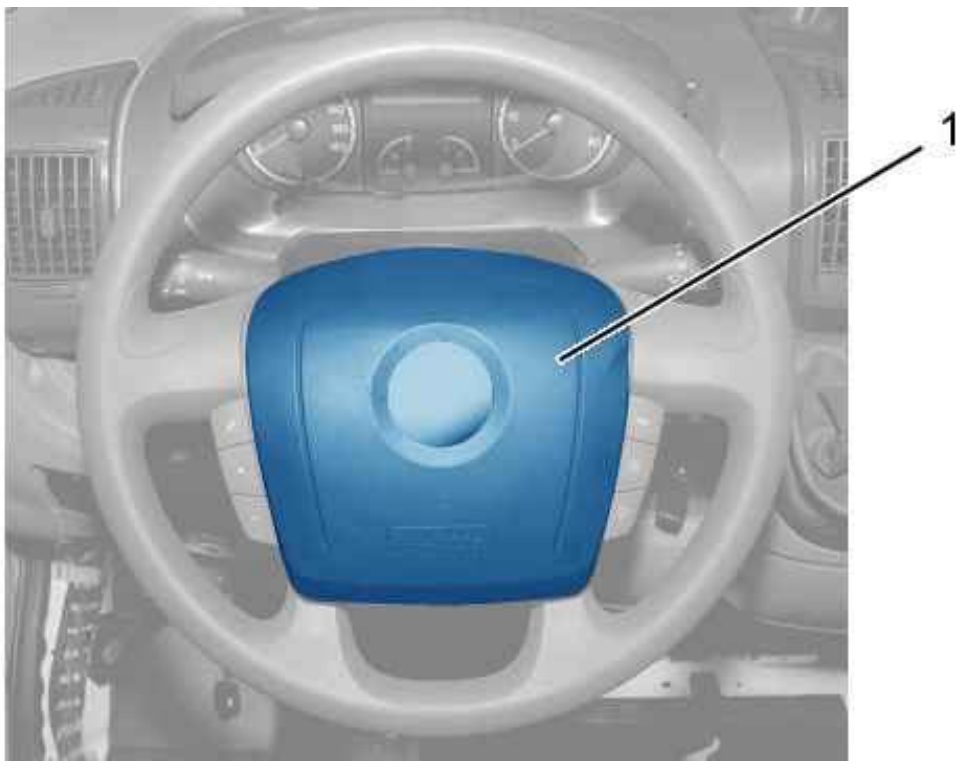

Figure : C5FP0YKD

Remove the driver’s air bag (1) (see the relevant operation).
Put the wheels in the straight ahead position.

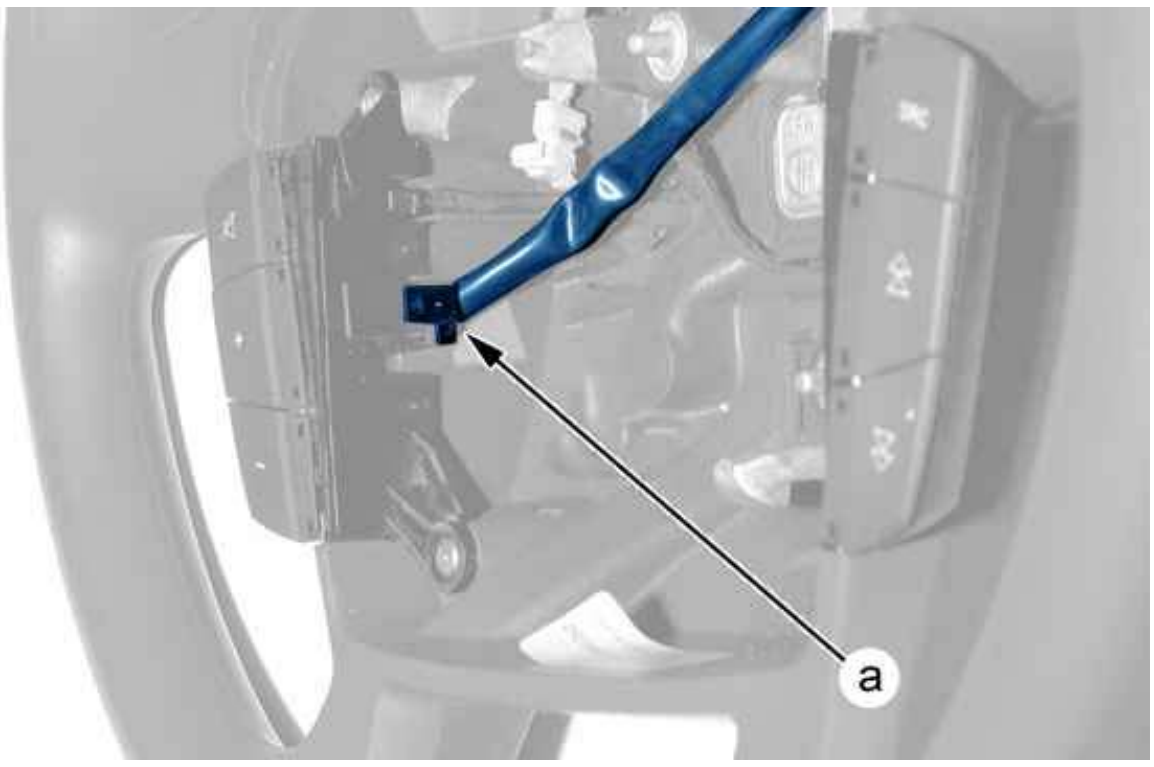

Figure : C5FP0YLD

Disconnect the connector "a".

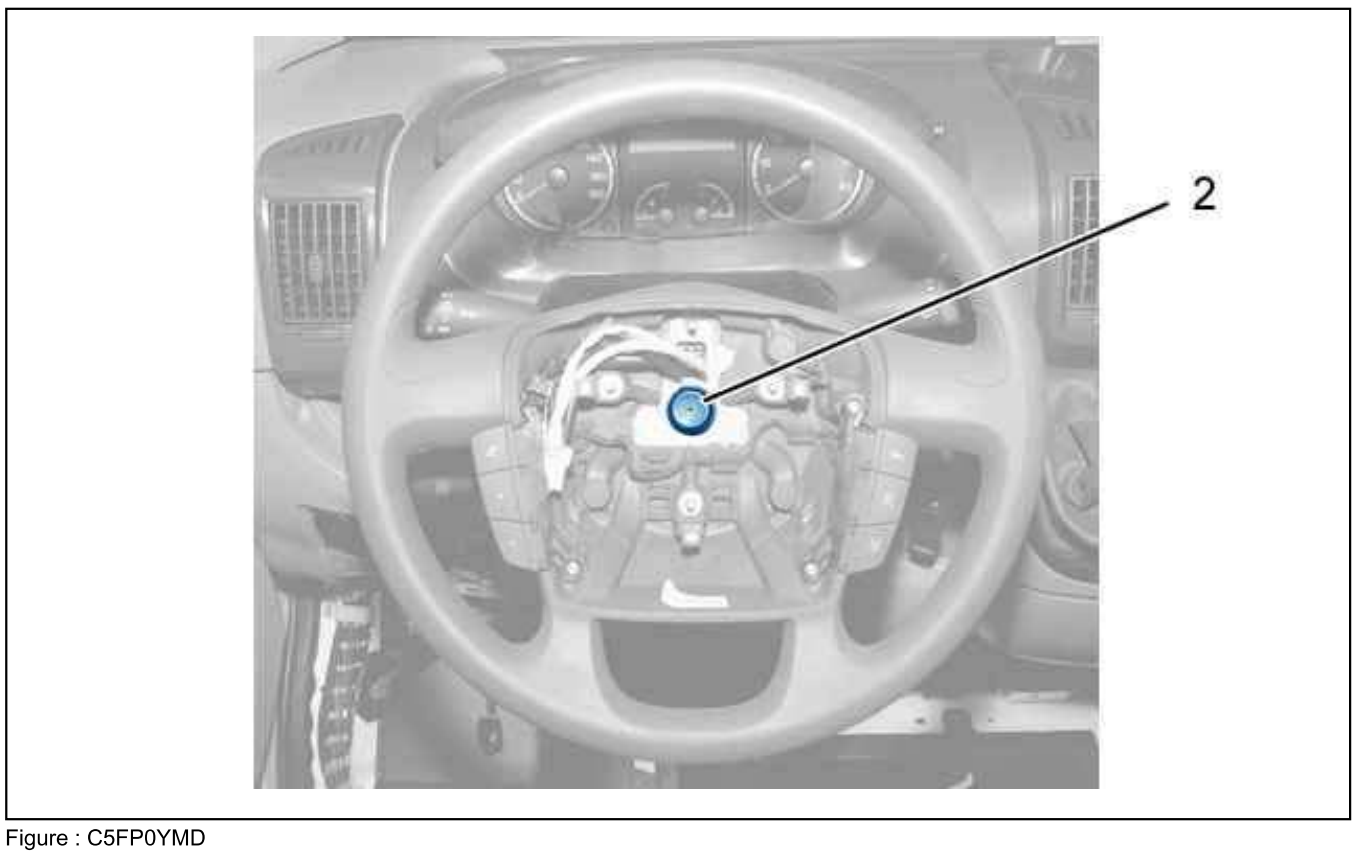

Figure : C5FP0YMD

Remove the cover (2).



Figure : C5FP0YND

Unscrew nut (3).
Detach the steering wheel trim (4).
Remove :

- The nut (3)
- The steering wheel (4)

2. Refitting

Refit :

- The steering wheel (4)
- The nut (3) ; Tighten to 5 ± 1 daN.m
- The cover (2)

Reconnect the connector "a".
Refit the driver’s airbag (1) (see the relevant operation).
Reconnect the battery.

REMOVING - REFITTING : STEERING LOCK

ESSENTIAL : Observe the safety and cleanliness recommendations.

1. Removing

Disconnect the battery.
Remove the controls at the steering wheel (see the relevant operation).



Figure : C5FP0Z0D

Slacken the screws (1) ; Using a punch and a hammer.

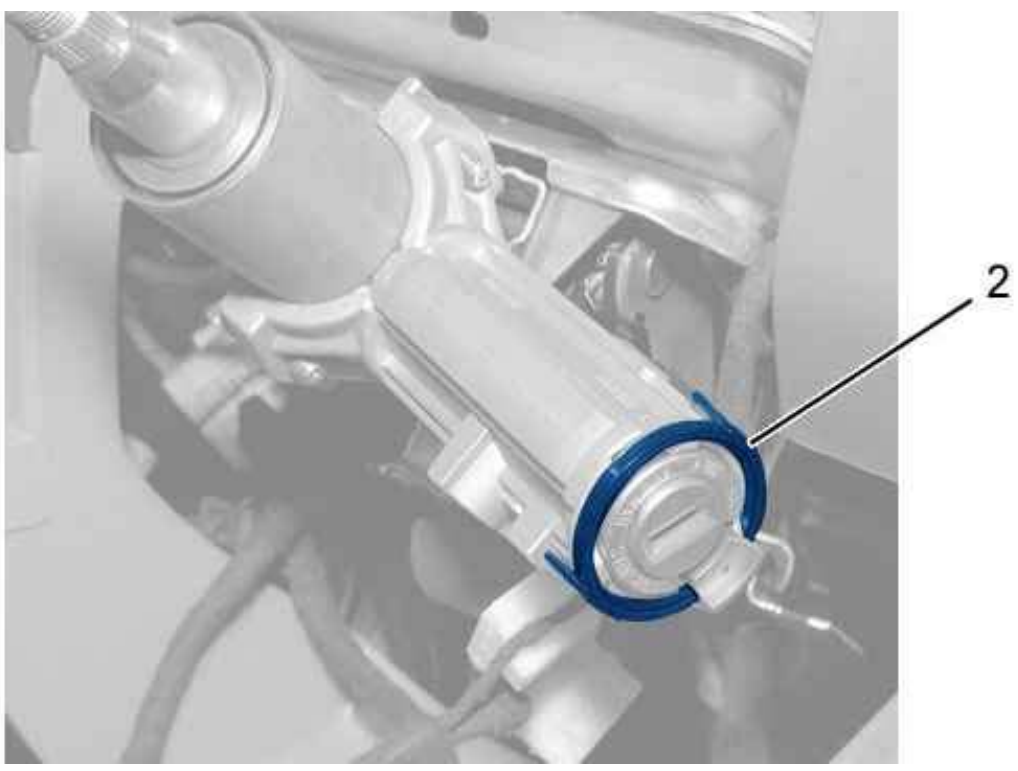

Figure : B3EP18PD

Unclip the transponder sensor (2).
Disconnect the connectors .
Remove :

- The bolts (1)
- The steering lock (mark the direction of fitting)

2. Refitting

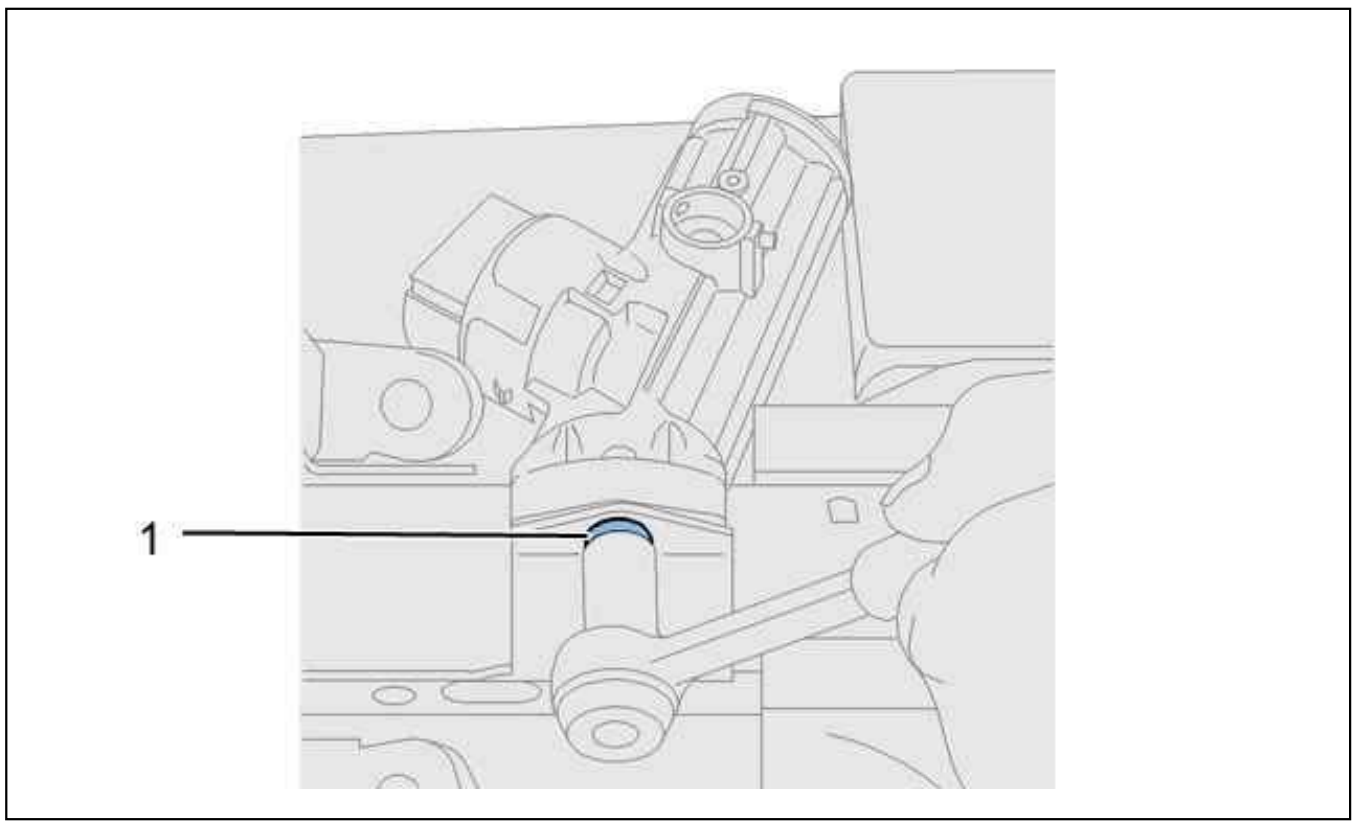

Figure : B3EP18QD

Refit :

- The steering lock
- The bolts (1)

Tighten screws (1) until shearing off the screw heads.
Refit The transponder aerial (2).
Connect the connectors .
Refit The controls under the steering wheel (see the relevant operation).
Reconnect the battery.

REMOVING - REFITTING : STEERING WHEEL CONTROLS

ESSENTIAL : Observe the safety and cleanliness recommendations.

1. Removing

Disconnect the battery.
Put the wheels in the straight ahead position.
Push back the steering wheel as far as it will go.
Remove the steering wheel (see the relevant operation).



Figure : C5FP0YPD

Remove lower panel (1) (see the relevant operation).

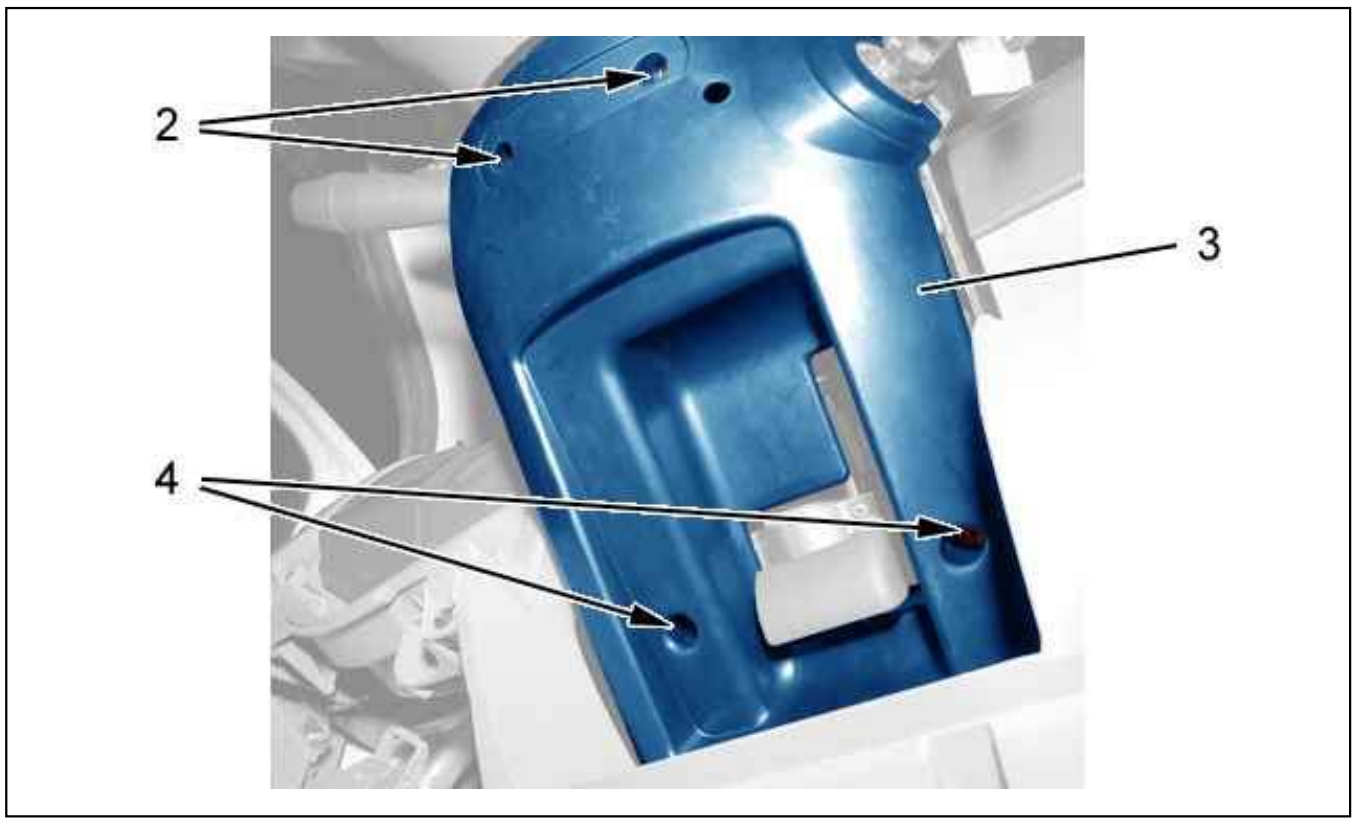

Figure : C5FP0YQD

Remove :

- The screws (2) and (4)
- The lower trim on the steering column (3)

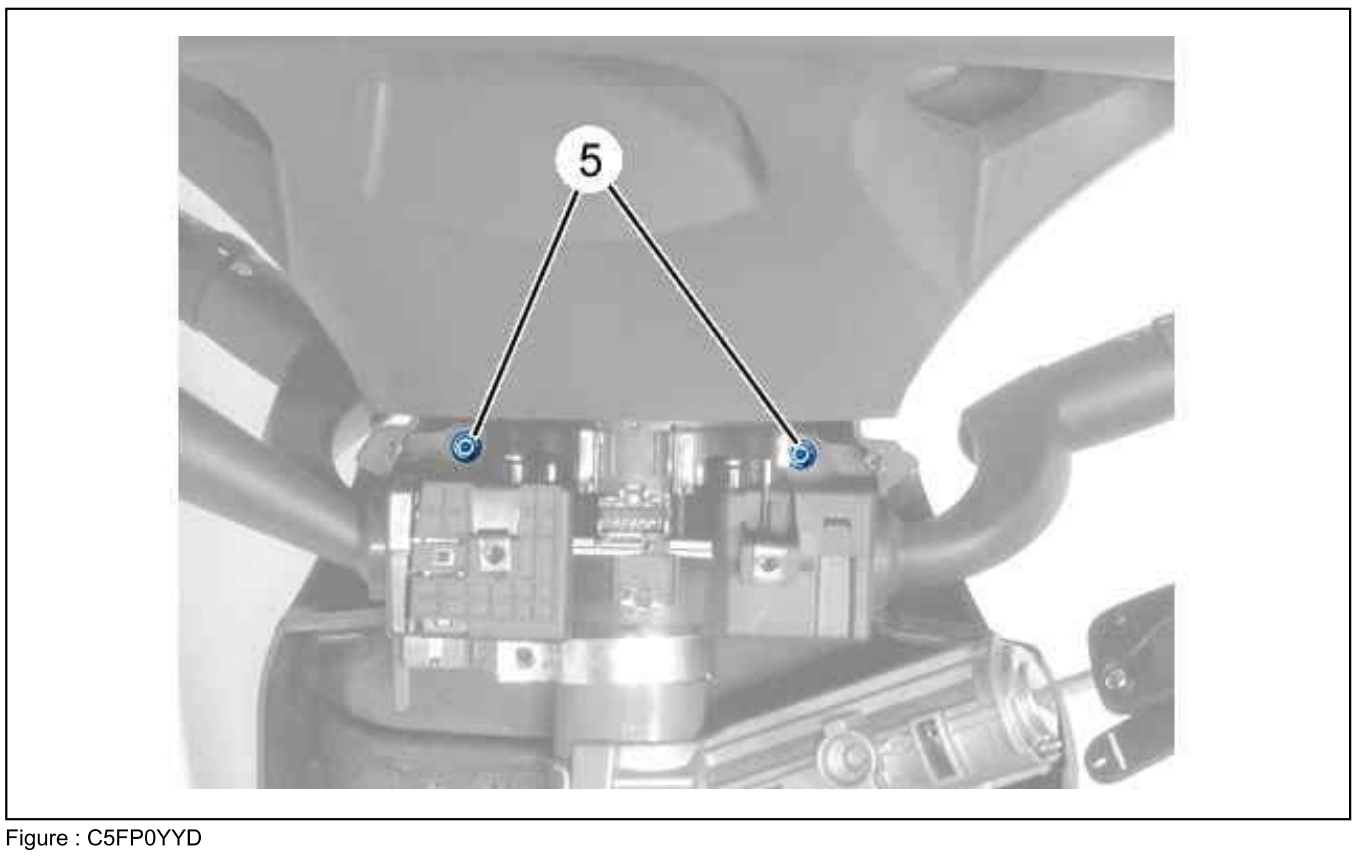

Figure : C5FP0YYD

Remove the bolts (5).

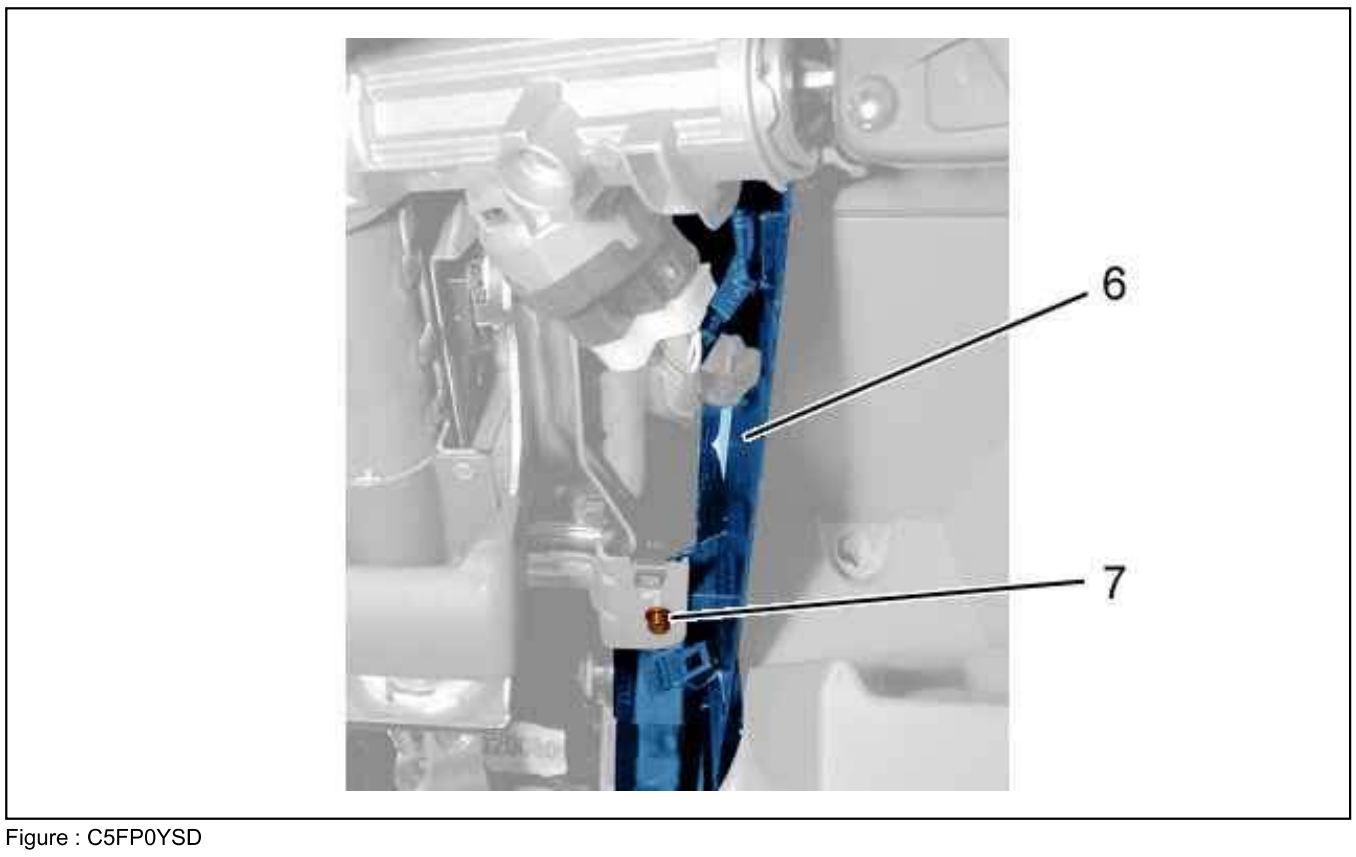

Figure : C5FP0YSD

Remove :

- The (7) bolt
- The steering column upper cowling (6)

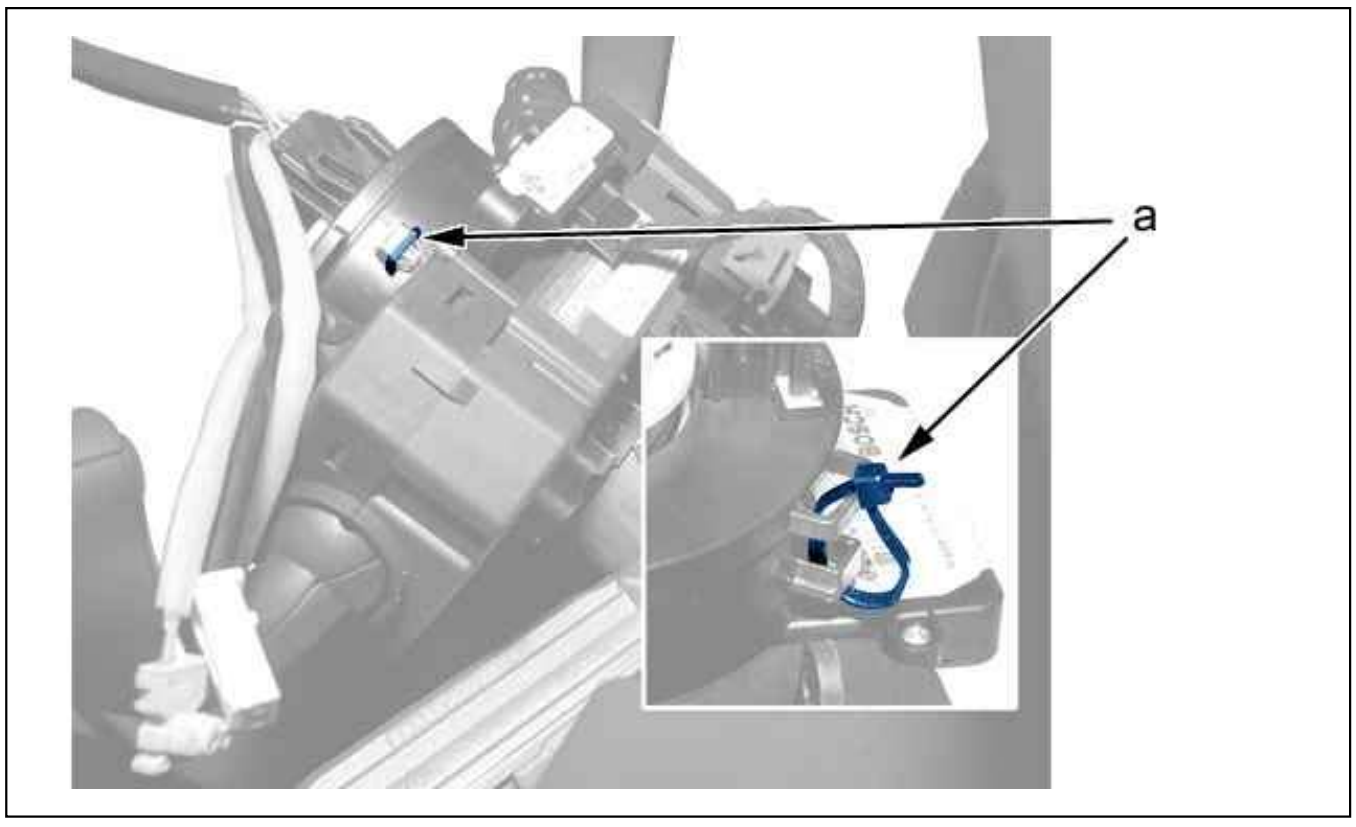

Figure : C5FP0YTD

Fit a plastic collar to maintain the position of the rotary switch (at "a").



Figure : B3EP18ND

Remove bolts (8).

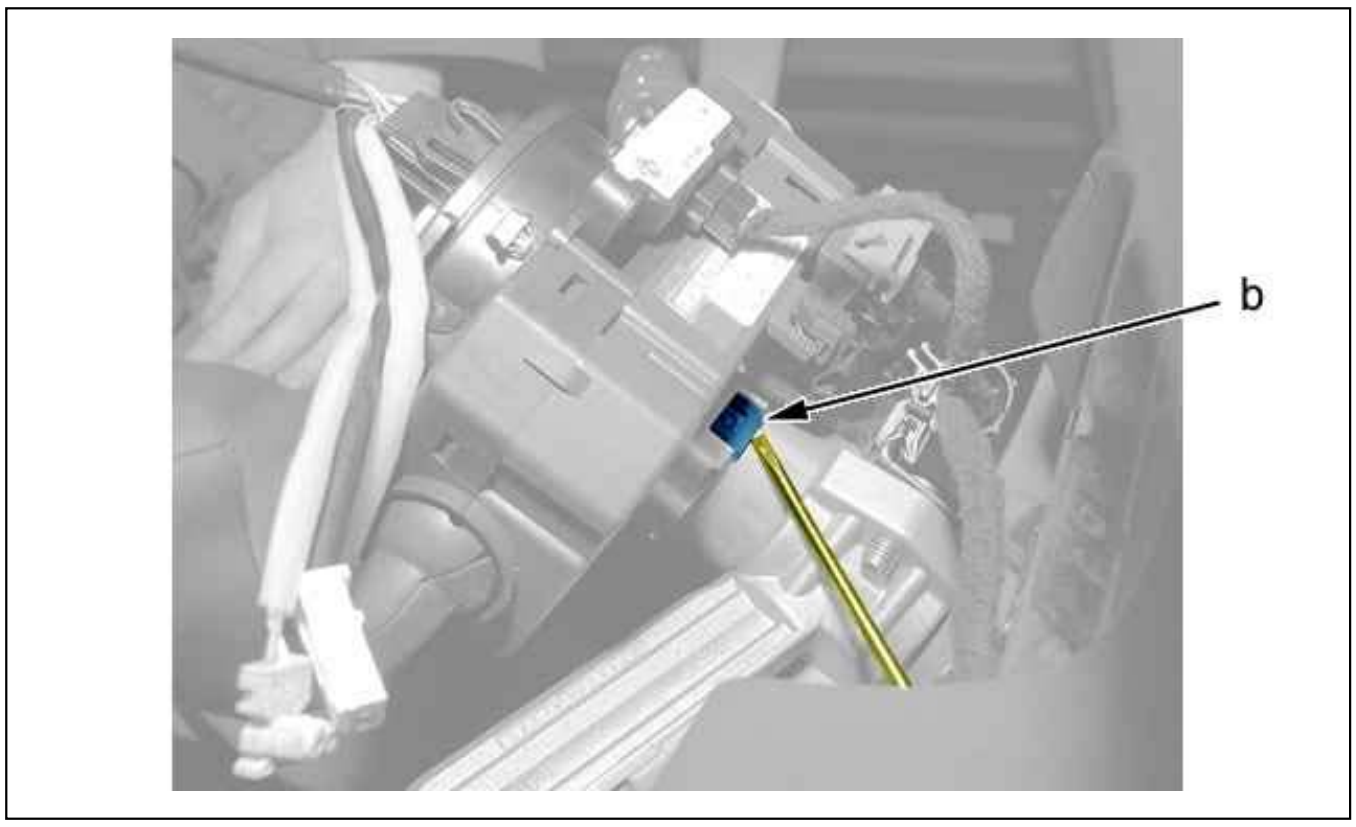

Figure : C5FP0YZD

Detach the assembly of controls under the steering wheel (at "b") By means of a screwdriver.
Disengage all the controls under the steering wheel.
Disconnect the connectors .
Remove the steering wheel controls assembly .

2. Refitting

Replace the steering wheel controls assembly.
Connect the connectors .
Fit the bolt (8) ; Tighten to 0,5 ± 0,2 daN.m.
Cut and remove the plastic collar.
Refit :

- The steering column upper cowling (6)
- The (7) bolt ; Tighten to 0,2 ± 0,02 daN.m
- The bolts (5) ; Tighten to 0,2 ± 0,02 daN.m
- The lower trim on the steering column (3)
- The bolts (4) ; Tighten to 0,2 ± 0,02 daN.m
- The bolts (2) ; Tighten to 0,2 ± 0,02 daN.m
- The lower panel (1) (see the relevant operation)
- The steering wheel (see the relevant operation)

Reconnect the battery.
Check that the steering wheel electrical controls operate correctly.

REMOVING - REFITTING : STEERING COLUMN

ESSENTIAL : Observe the safety and cleanliness recommendations .

1. Removing

Disconnect the battery.
Put the wheels in the straight ahead position.
Remove :

- The steering wheel
- The controls under the steering wheel

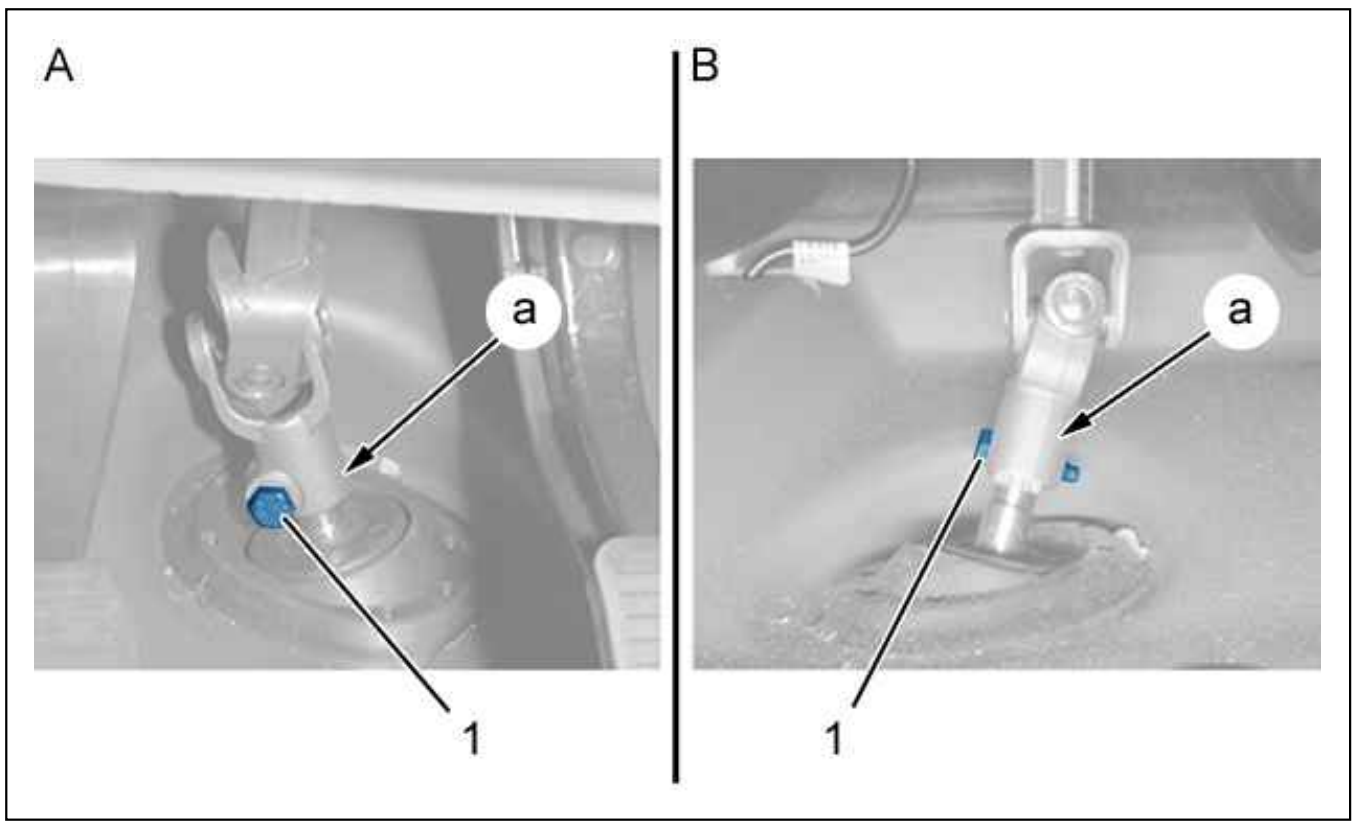

Figure : B3EG0JOD

Fitting A : Left-hand drive .
Fitting B : Right-hand drive .
Remove the bolt (1).
Disengage and push the lower part of the steering column upwards (at "a").

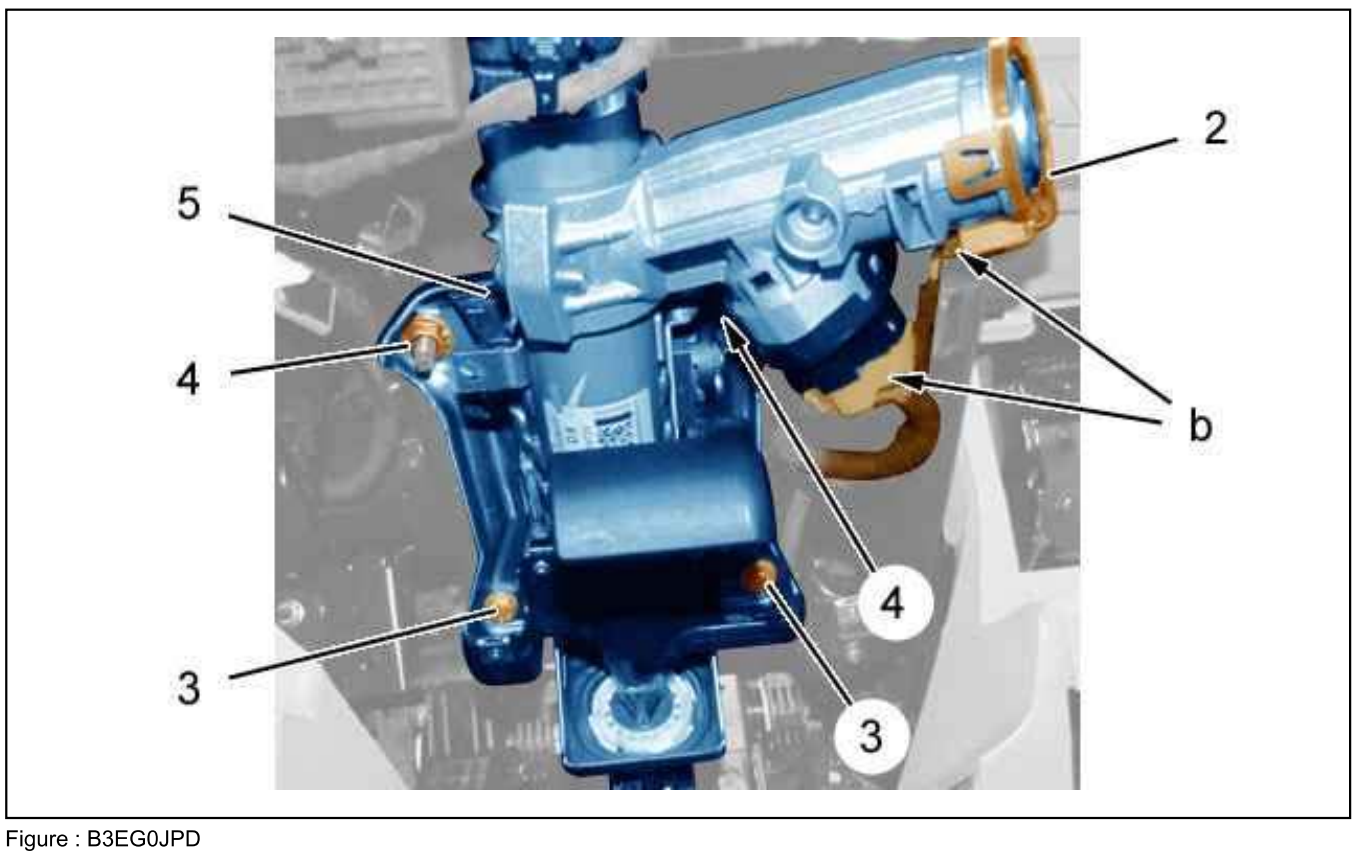

Figure : B3EG0JPD

Unplug :

- The connectors (at "b")
- The transponder aerial (2)

Remove :

- The bolts (3)
- The nuts (4)
- The steering column (5)

2. Refitting

CAUTION : Adhere to the tightening torques .

Refit :

- The steering column (5)
- The nuts (4) (without tightening them)
- The bolts (3)

Tighten :

- The bolts (3)
- The nuts (4)

Couple the steering column (lower part) (at "a").
Fit a new bolt (1) coated with threadlock loctite.
Connect :

- The transponder aerial (2)
- The connectors (at "b")

Refit :

- The controls under the steering wheel
- The steering wheel

CAUTION : Perform the operations to be carried out following reconnection of the battery.

Reconnect the battery.
Check that the steering wheel electrical controls operate correctly.

REMOVING - REFITTING : STEERING MECHANISM

1. Recommended tools

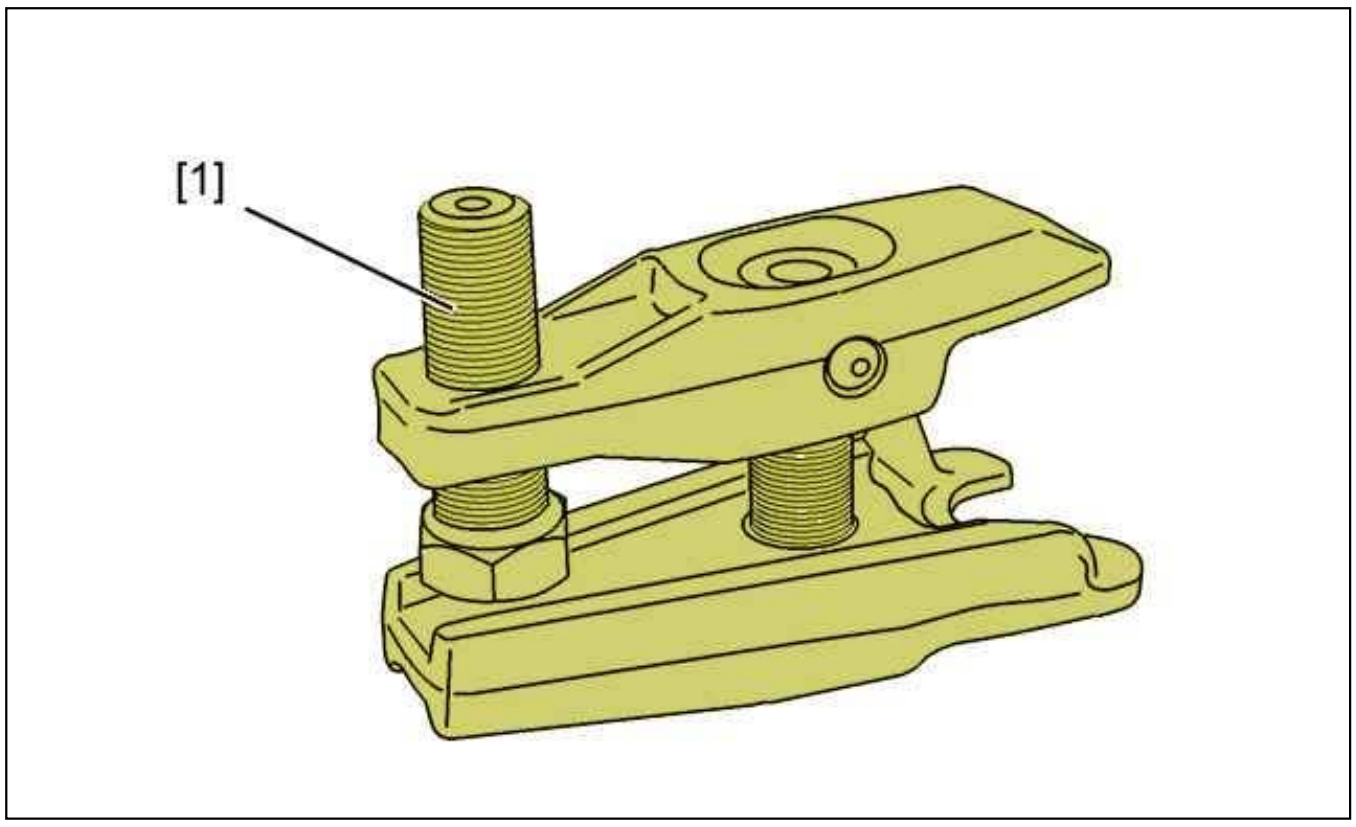

Figure : E5AP2WYD

Reference	Designation	Reference	Reference
[1]	ball-joint extractor	5707-T	(-).0919

2. Removing

Disconnect the battery negative terminal.
Untighten the wheel screws (front).
Lift and support the front of the vehicle.
Remove the front wheels ..

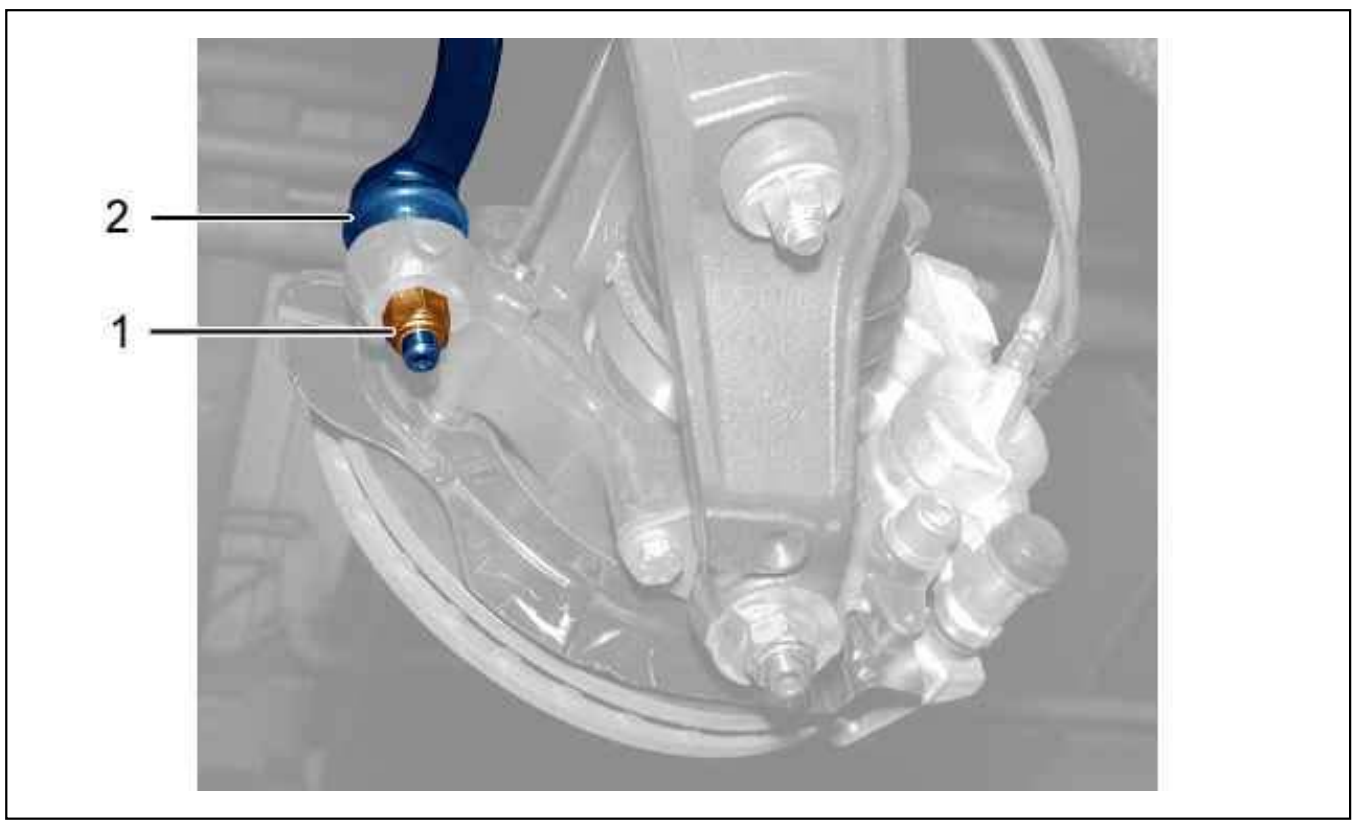

Figure : B3FP7JJD

Remove the nut (1) (on each side).
Uncouple the steering ball-joint (2) ; Using tool [1] (on each side).

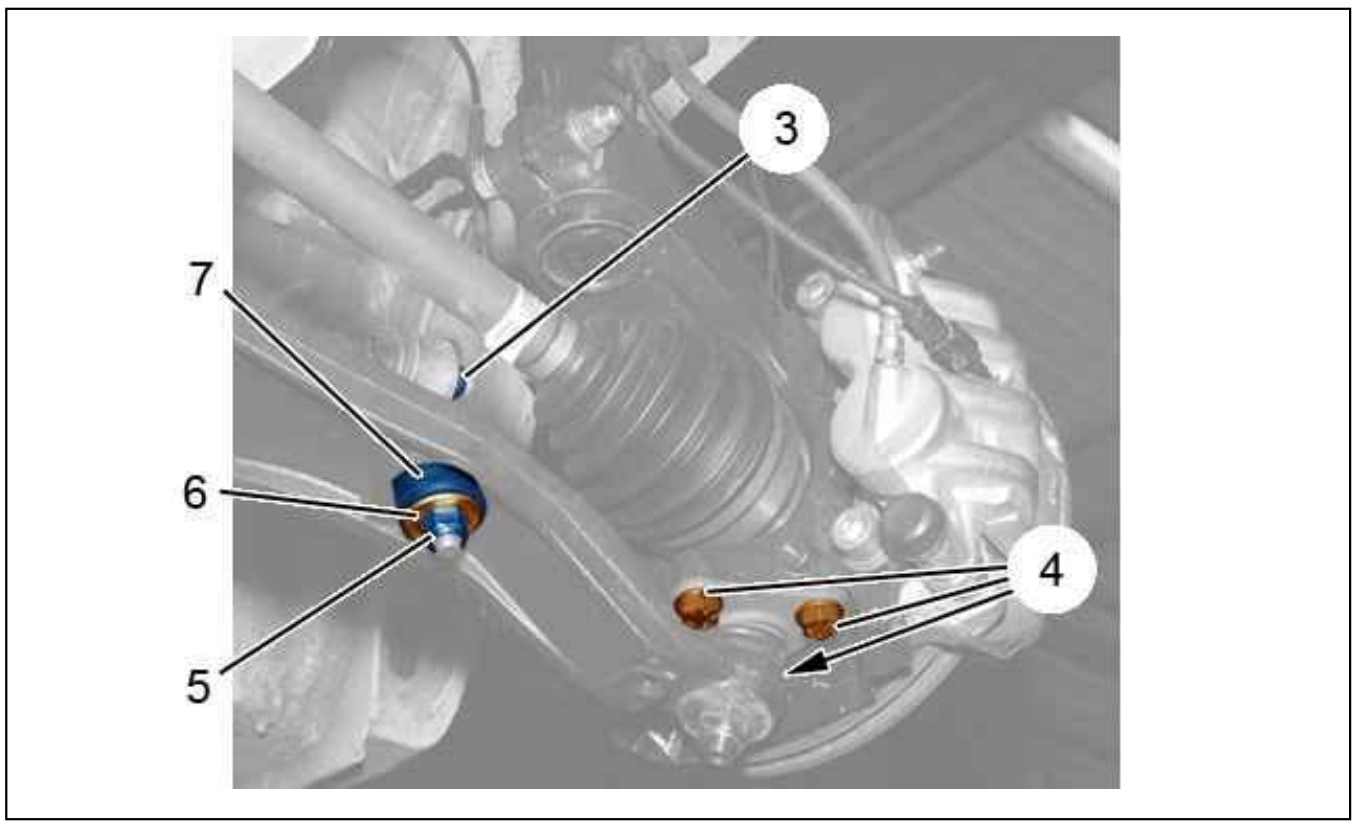

Figure : B3BP1CPD

Unscrew nut (3) (on each side).
Remove (on each side) :

- The nut (5)
- The washer (6)
- The silentblock (7)
- The 3 bolts (4)

Move aside the hub carrier (on each side).
Drain the steering assistance circuit (see the relevant operation).

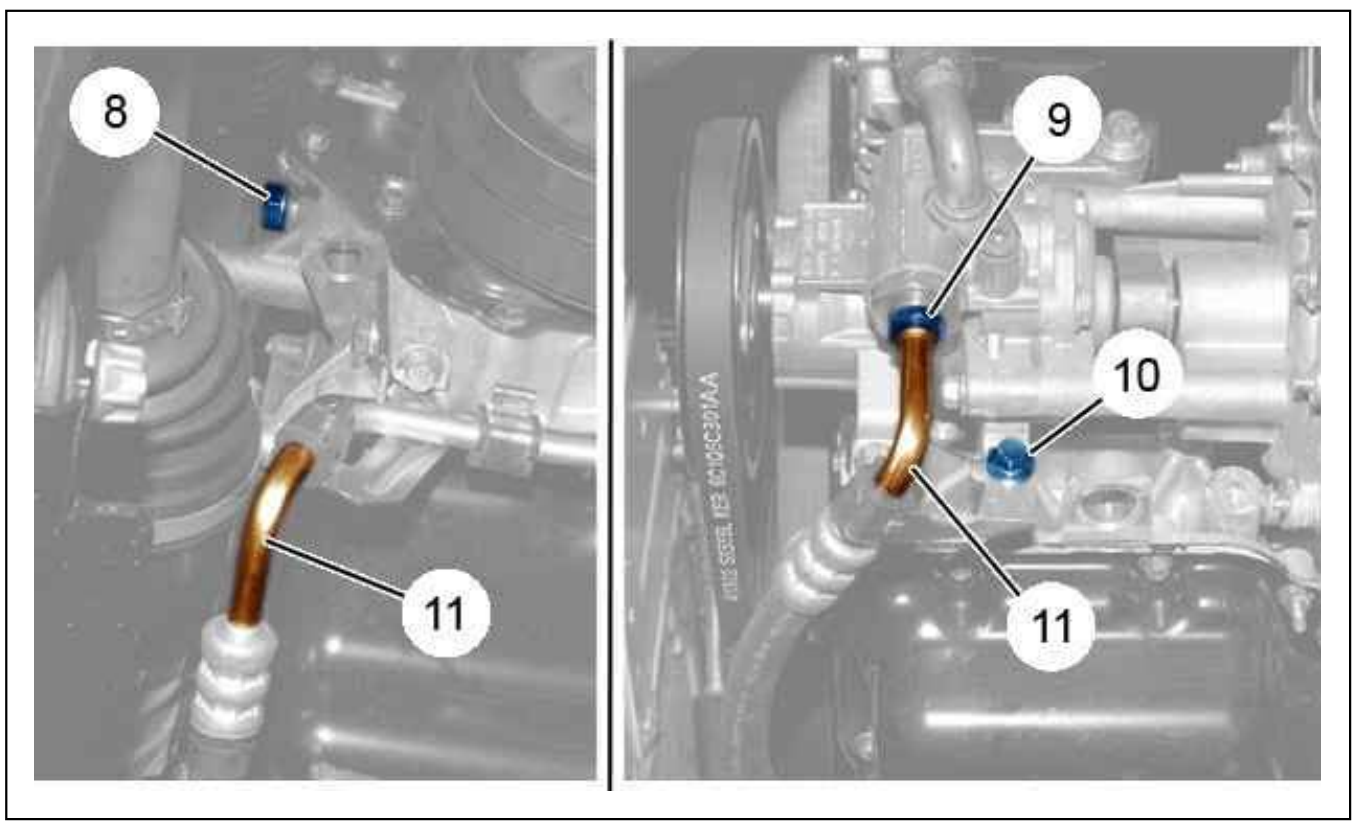

Figure : B1BPRRKD

Uncouple the high pressure pipe union (9).
Remove bolts (8), (10).
Move aside the piping (11) without distorting it.

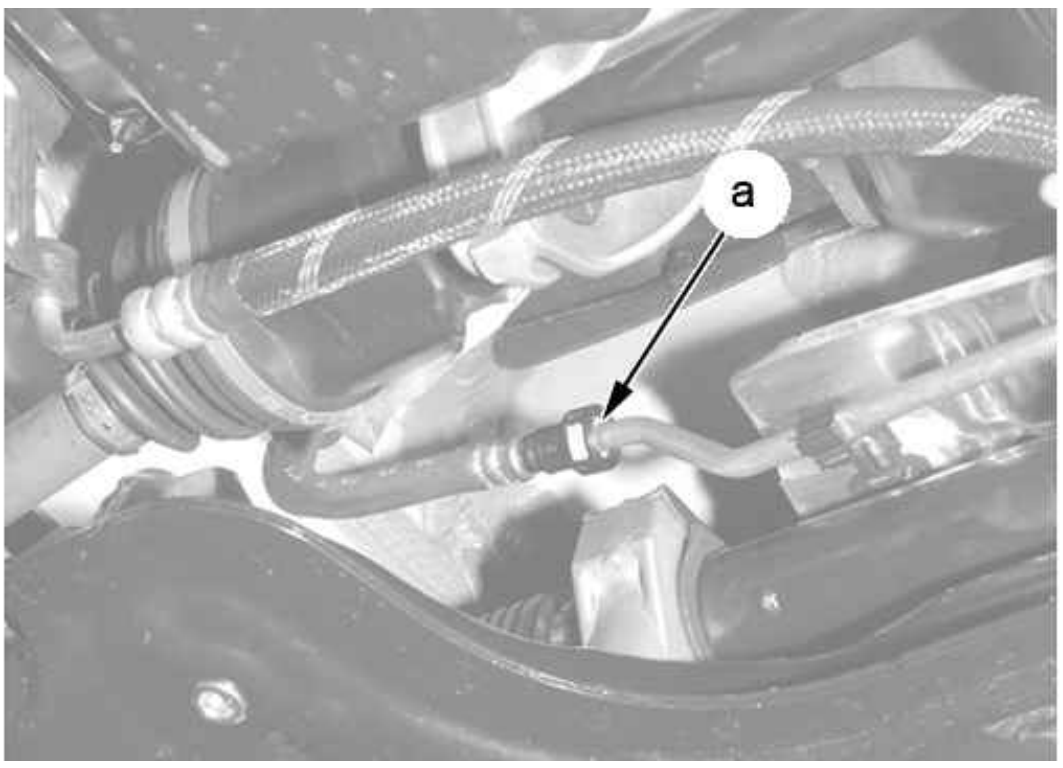

Figure : B3FP7KXD

Uncouple the low pressure pipe (at "a").
Close the hydraulic unit openings using caps.
Disconnect the power steering regulated electrovalve connector (if necessary).

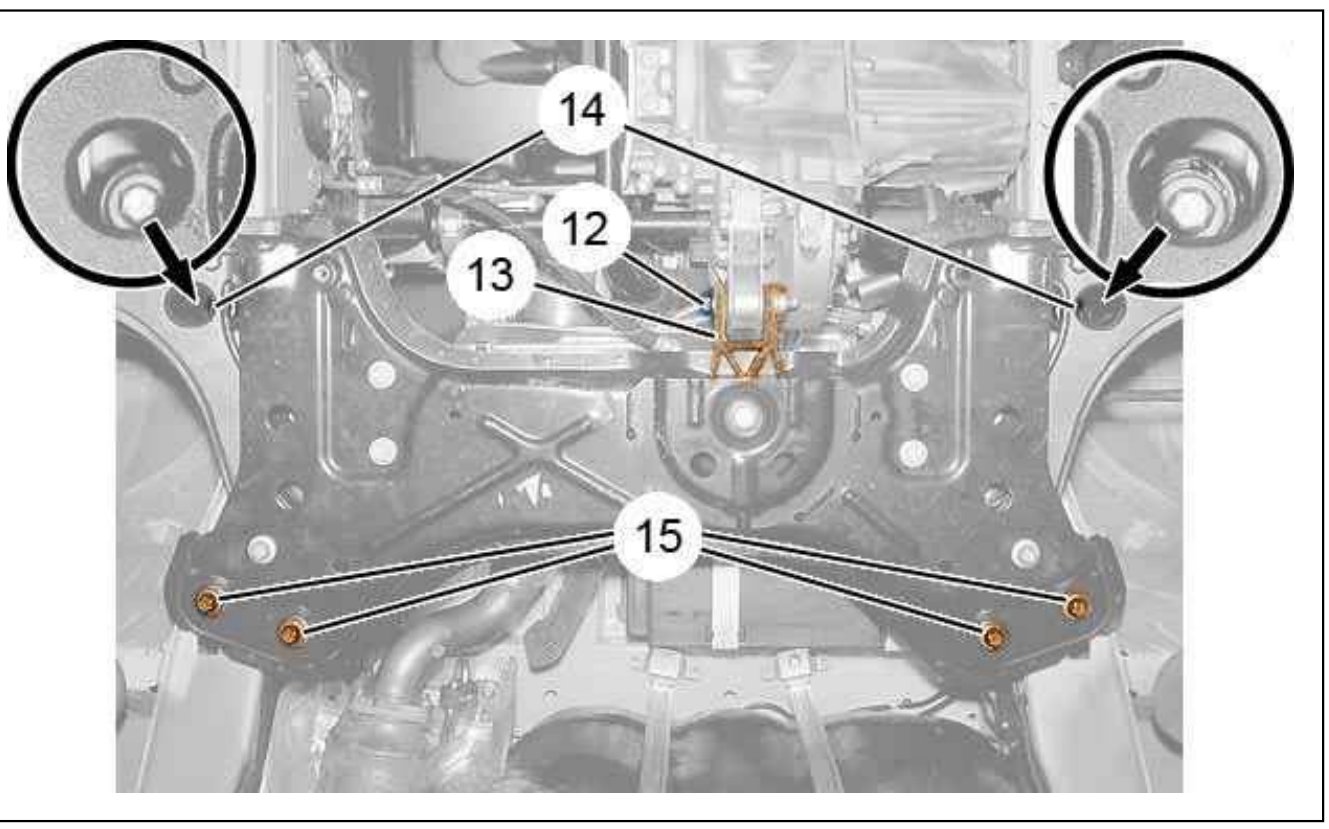

Figure : B3CP0BGD

Remove bolts (12).
Move aside the torque reaction rod (13) from the front subframe.
Position a lifting tool to retain the front sub-frame.
Remove :

- The bolts (14)
- The bolts (15)
- The front subframe and steering mechanism assembly

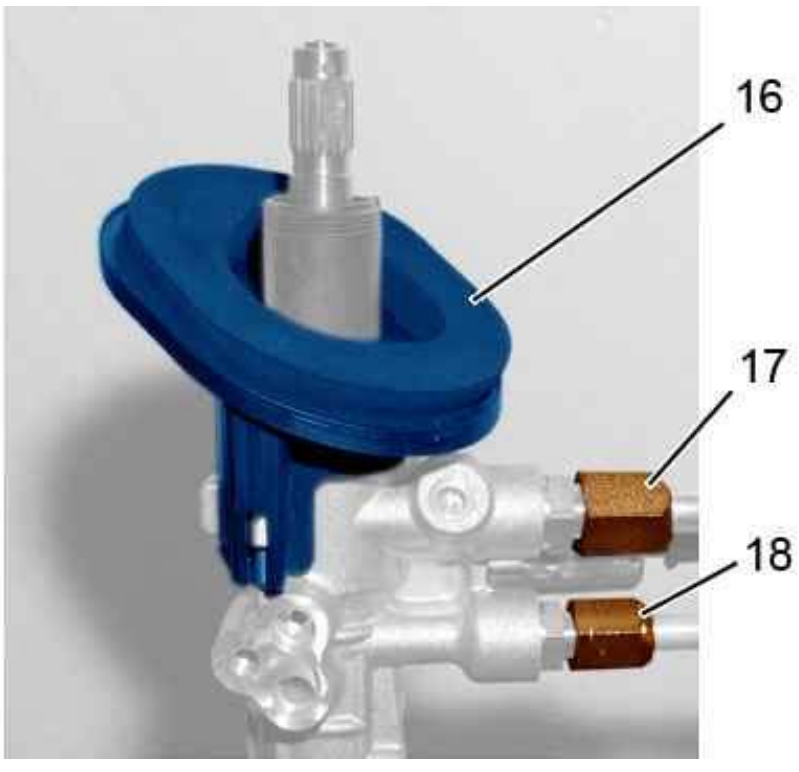

Figure : B3EP18RD

Remove the protector (16).
Uncouple :

- The high pressure pipe union (18)
- The low pressure pipe union (17)

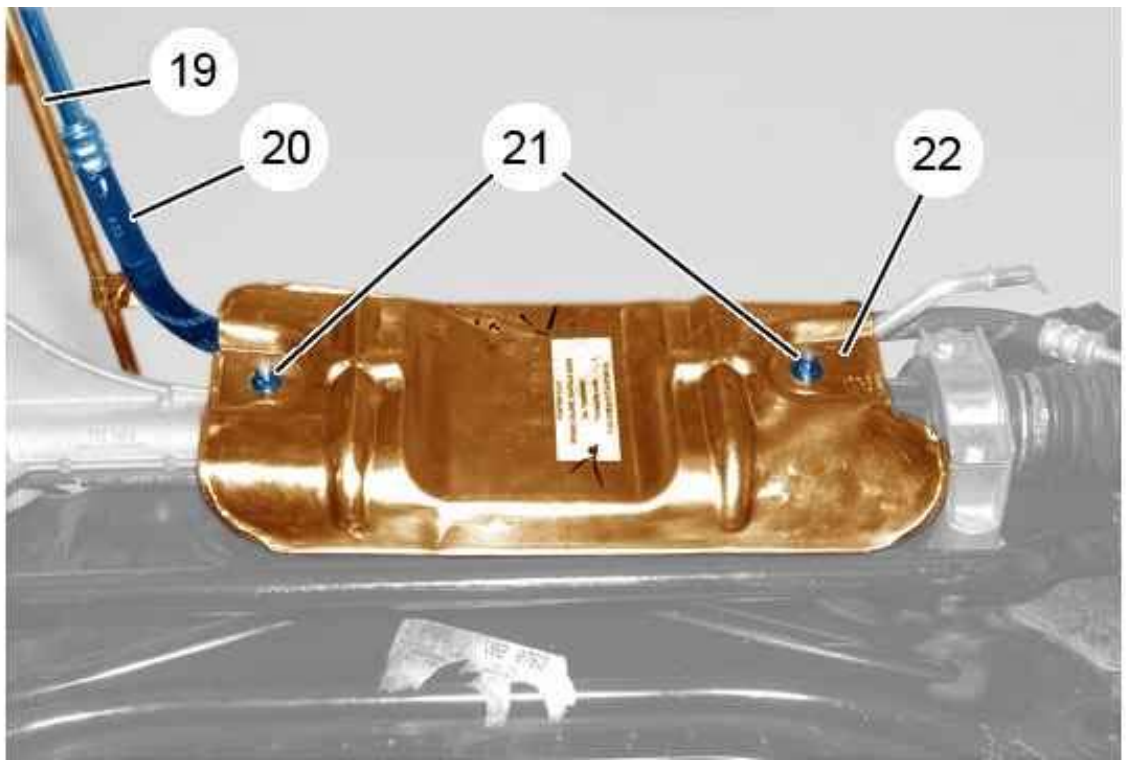

Figure : B3EP18SD

Remove :

- The nuts (21)
- The thermal protector (22)
- The high pressure pipe (19)
- The low pressure pipe (20)

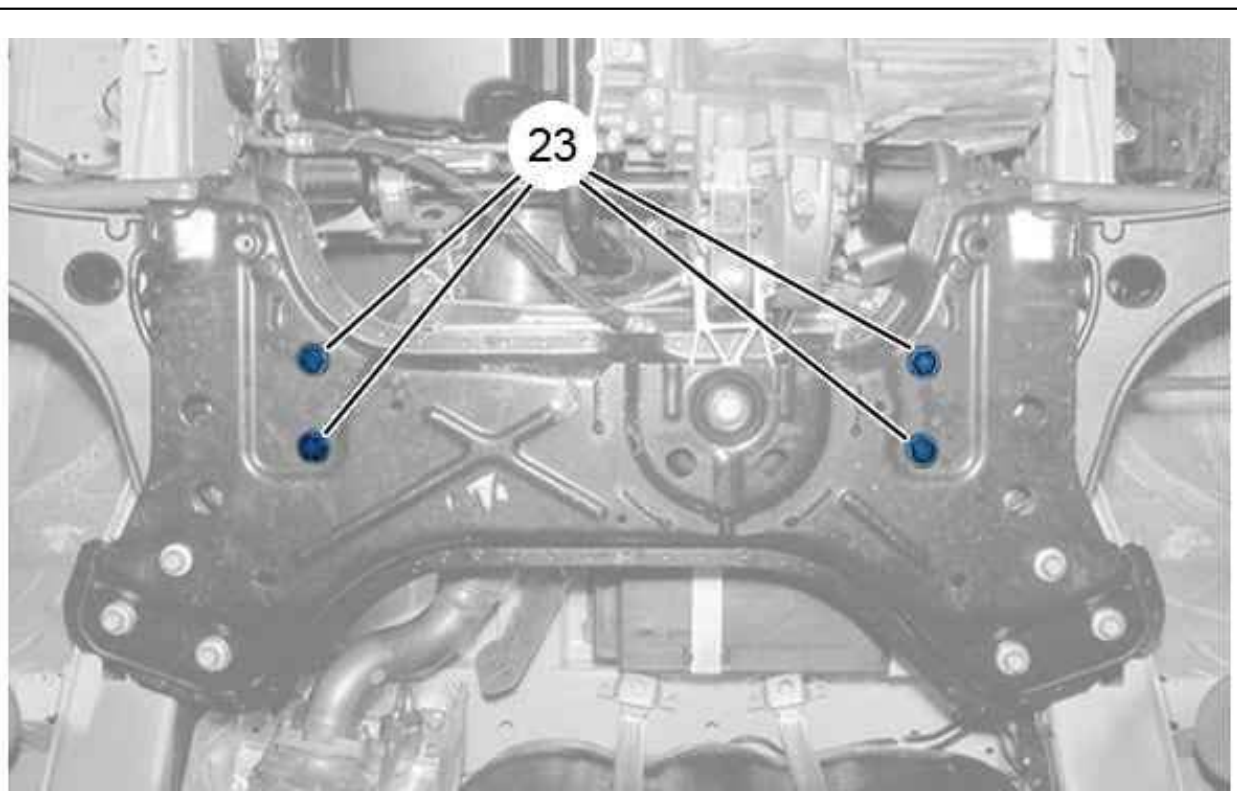

Figure : B3CP0BHD

Remove the bolts (23).
Uncouple the steering mechanism.

3. Refitting

N.B. : Always fit new Nylstop nuts.

Couple the steering mechanism.
Refit the bolts (23) ; Tighten to 11 ± 1,4 daN.m.
Fit the protector (16) (new).
Refit :

- The low pressure pipe (20)
- The high pressure pipe (19)
- The thermal protector (22)
- The nuts (21) ; Tighten to 0,6 ± 0,17 daN.m

Couple up :

- The high pressure pipe union (18) ; Tighten to 5,5 ± 0,7 daN.m
- The low pressure pipe union (17) ; Tighten to 6,3 ± 0,8 daN.m

Position the front subframe and steering mechanism assembly on the body.
Refit :

- The bolts (14) ; Tighten to 29 ± 1 daN.m
- The bolts (15) ; Tighten to 29 ± 1 daN.m

Engage the torque reaction rod (13) on the front subframe.
Refit bolt (12) ; Tighten to 29 ± 8 daN.m.
Couple up :

- The low pressure pipe (at "a")
- The high pressure pipe union (9) ; Tighten to 2,7 ± 0,2 daN.m

Refit :

- The (8) bolt ; Tighten to 2 ± 0,2 daN.m
- The (10) bolt ; Tighten to 2,2 ± 0,2 daN.m

Connect the power steering regulated electrovalve connector (if necessary).
Position the hub carrier lower ball joint (on each side).
Refit (on each side) :

- The 3 bolts (4) ; Tighten to 11,5 ± 0,4 daN.m
- The silentblock (7)
- The washer (6)
- The nut (5)

Couple up the steering ball-joint (2) (on each side).
Refit the nut (1) ; Tighten to 8 ± 0,7 daN.m (on each side).
Fit the wheels.
Return the vehicle to its wheels.
Tighten (on each side) :

- The nut (3) to 5,6 ± 0,5 daN.m
- The nut (5) to 5,6 ± 0,5 daN.m

Tighten the wheel bolts (depending on the version) :

- 15 inch wheels : 16 ± 2,2 daNm
- 16 inch wheels : 18 ± 2,4 daNm

Reconnect the battery negative terminal.
Fill and bleed the power steering system (see the relevant operation).

REMOVING - REFITTING : POWER-ASSISTED STEERING PUMP

ESSENTIAL : Observe the safety and cleanliness recommendations .

1. Removing

Put the vehicle on a hoist.
Positioning of the ignition key at the STOP position.
Position an appropriate receptacle to recover the power steering fluid.

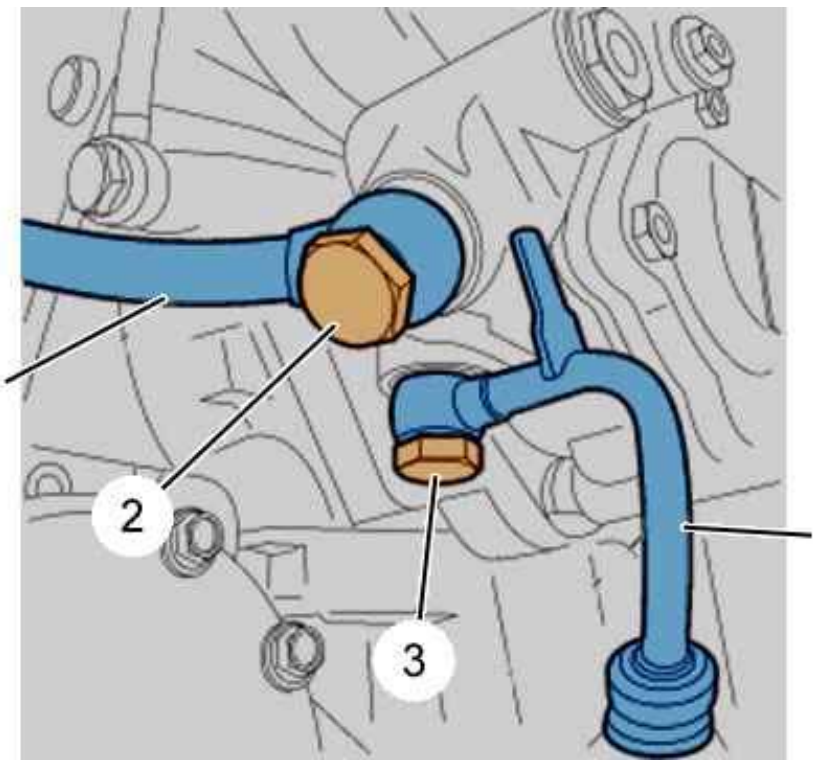

Figure : B3EM0AYD

CAUTION : Be prepared for the flow of power steering fluid.

Unscrew the connector (1) ; Disconnect : The power steering pump supply pipe (2) ; Drain the power steering fluid into the receptacle.
Unscrew the connector (3) ; Disconnect the high pressure pipe (4) supplying the power steering control unit.

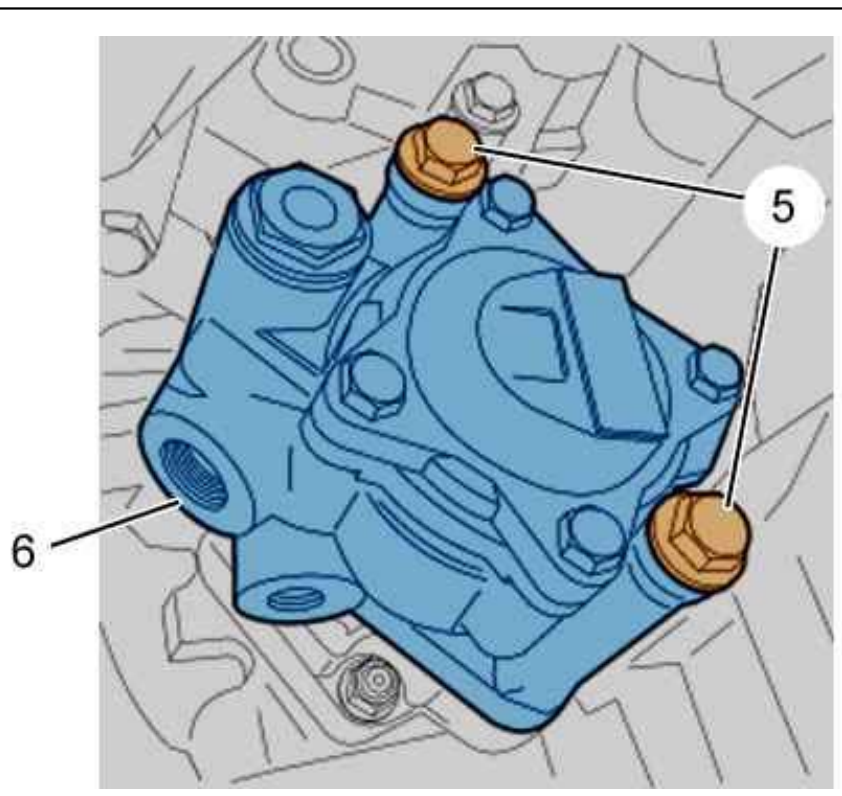

Figure : B3EM0AZD

Unscrew the mounting bolts (5) ; Remove the power steering pump (6) from the support.

2. Refitting

CAUTION : Always replace the seals .

Refit :

- The power steering pump (6)
- The securing bolts (5) ; Tighten to 4 ± 0,4 daN.m
- The high pressure pipe (4)
- The pipe (3) ; Tighten to 3,6 ± 0,3 daN.m
- The supply pipe (2)
- The pipe (1) ; Tighten to 3,6 ± 0,3 daN.m

Fill and bleed the power steering circuit.

REMOVING - REFITTING : POWER STEERING PUMP MOUNTING

ESSENTIAL : Observe the safety and cleanliness recommendations .

1. Recommended tools

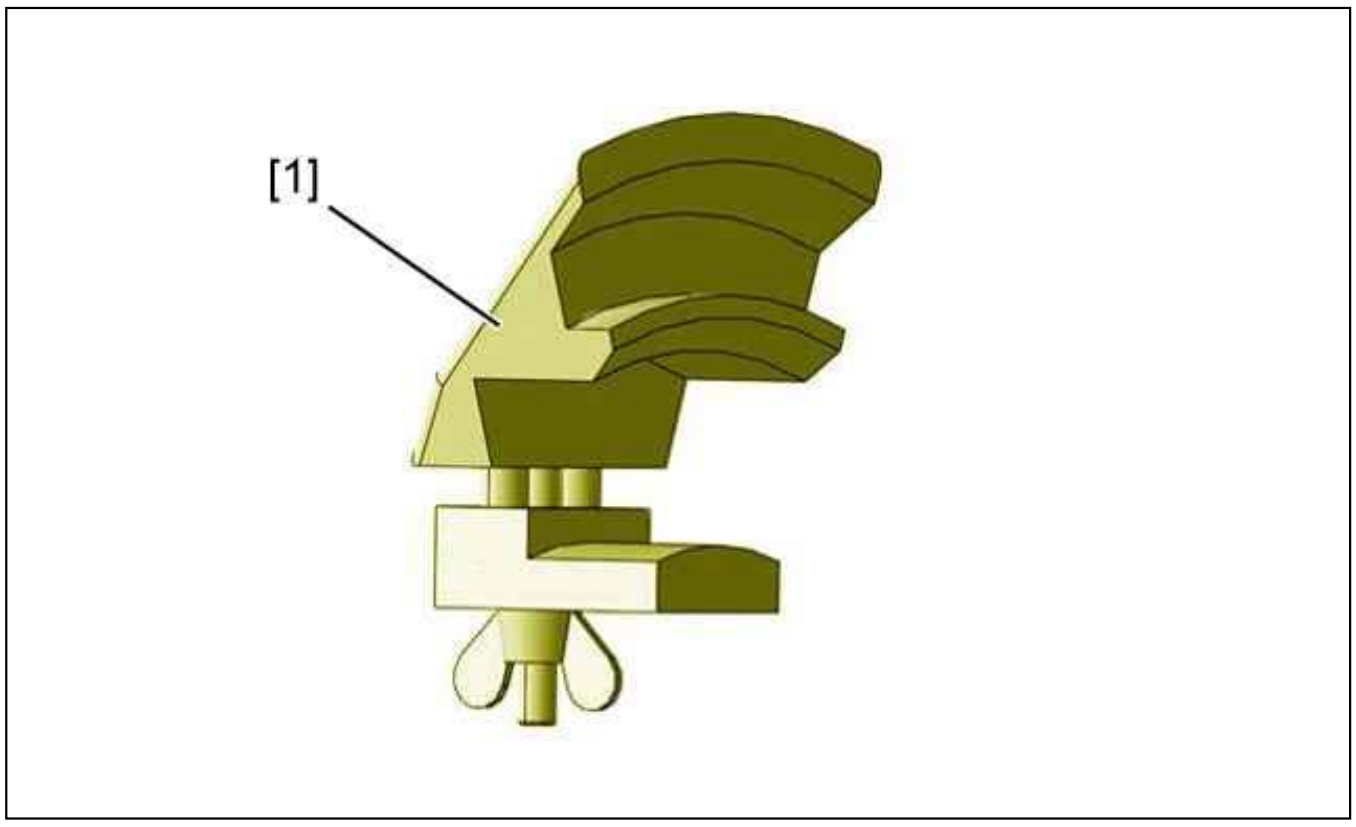

Figure : E5AM00LD

[1] Elastic auxiliary drive belt removal tool (-). 0191/2-AA.

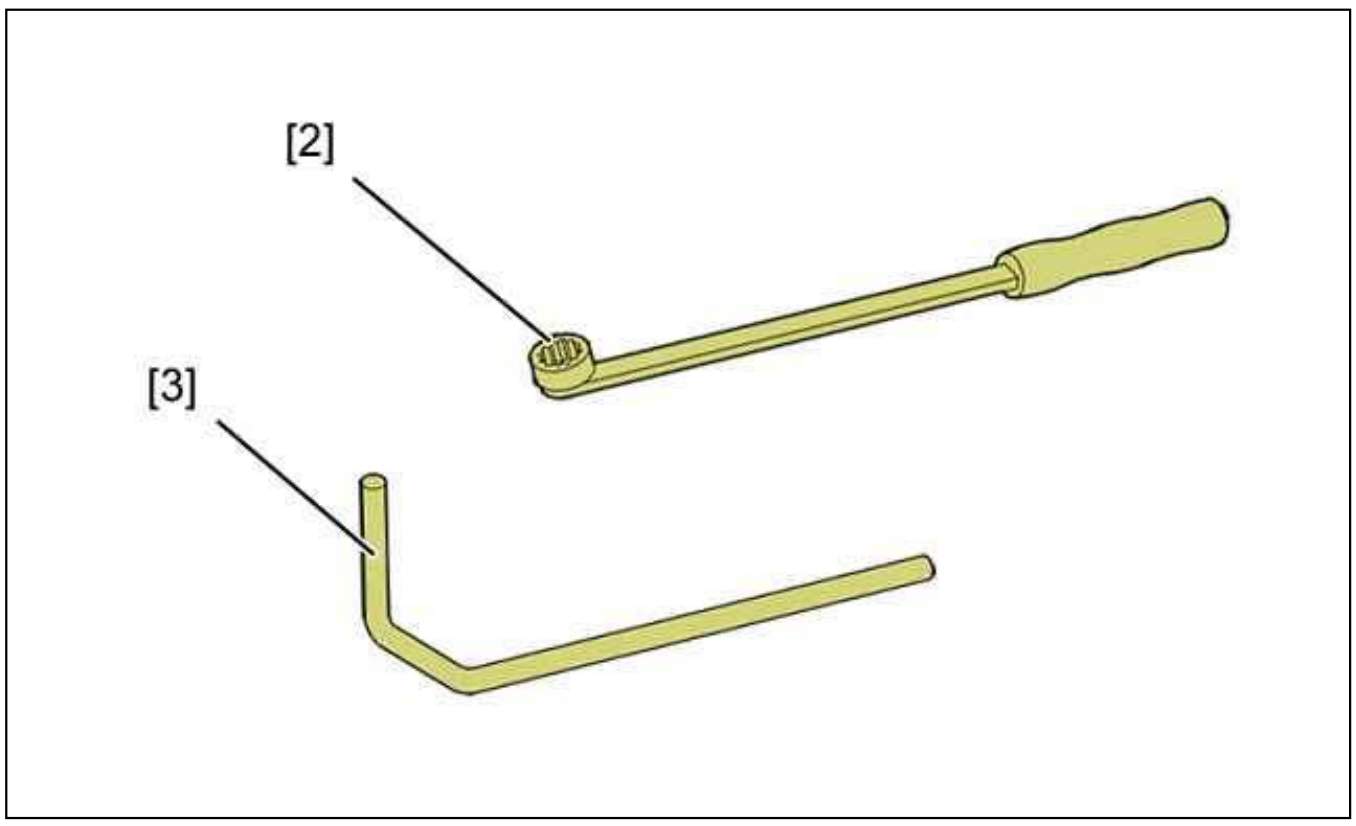

Figure : E5AP317D

[2] Dynamic tensioner compression lever (-).0188-Z.
[3] 4 mm diameter pin (-).0188-Q1.



Figure : E5AM00MD

[4] Accessory drive belt tensioner socket (-).0191/2-T.

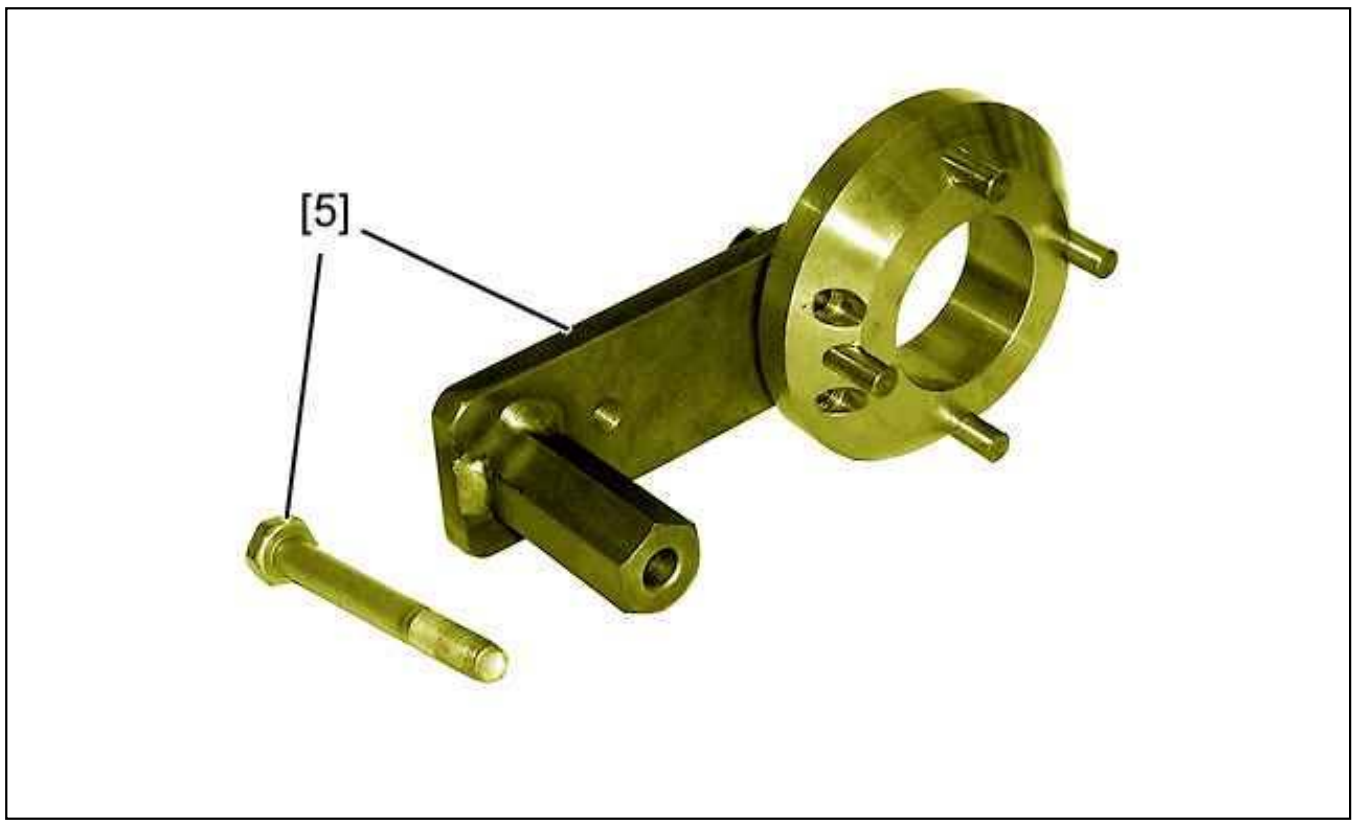

Figure : E5AP3SZD

[5] Crankshaft pulley immobilisation tool (-).0191/2-K.

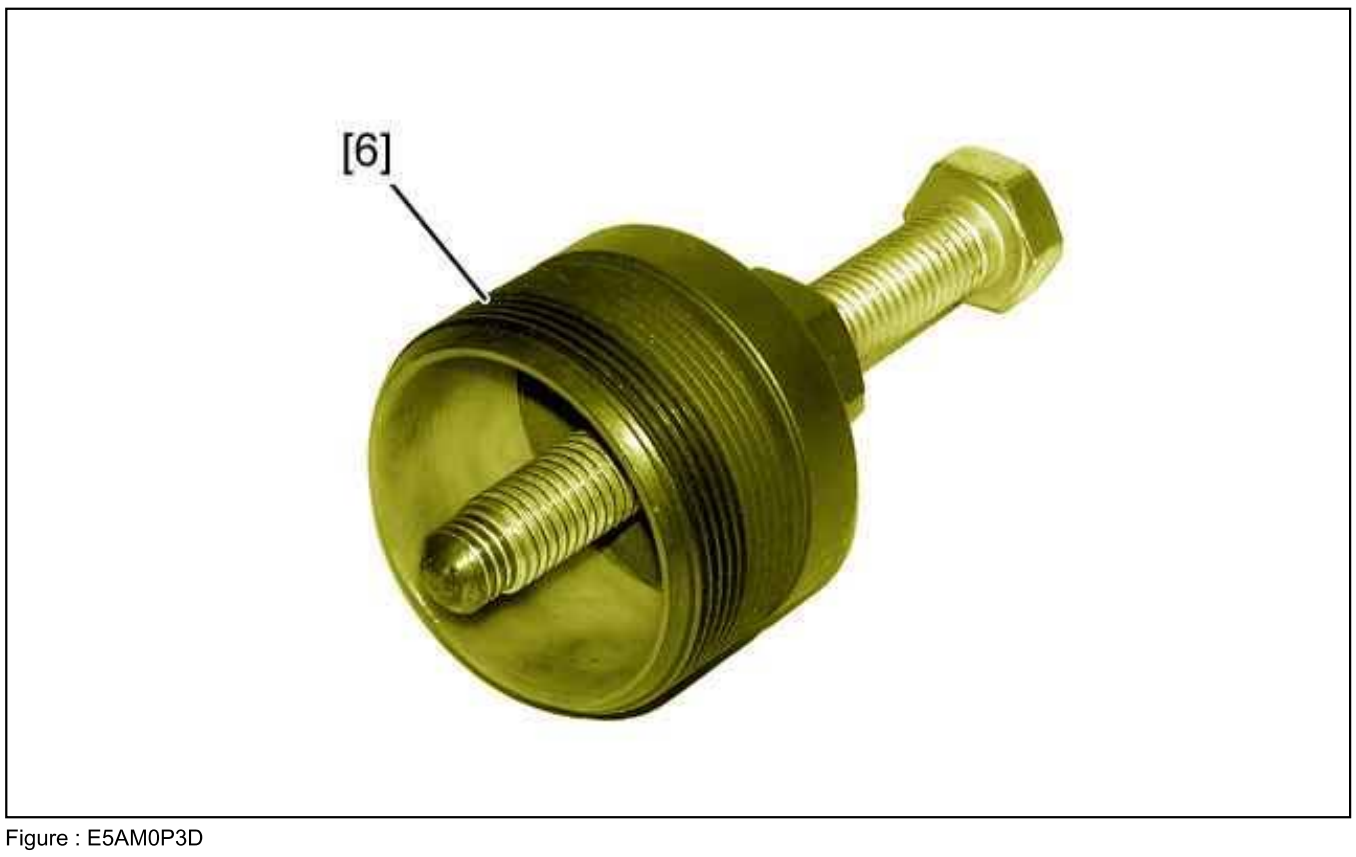

Figure : E5AM0P3D

[6] Seal extractor tool (timing side) (-).0191/2-G.

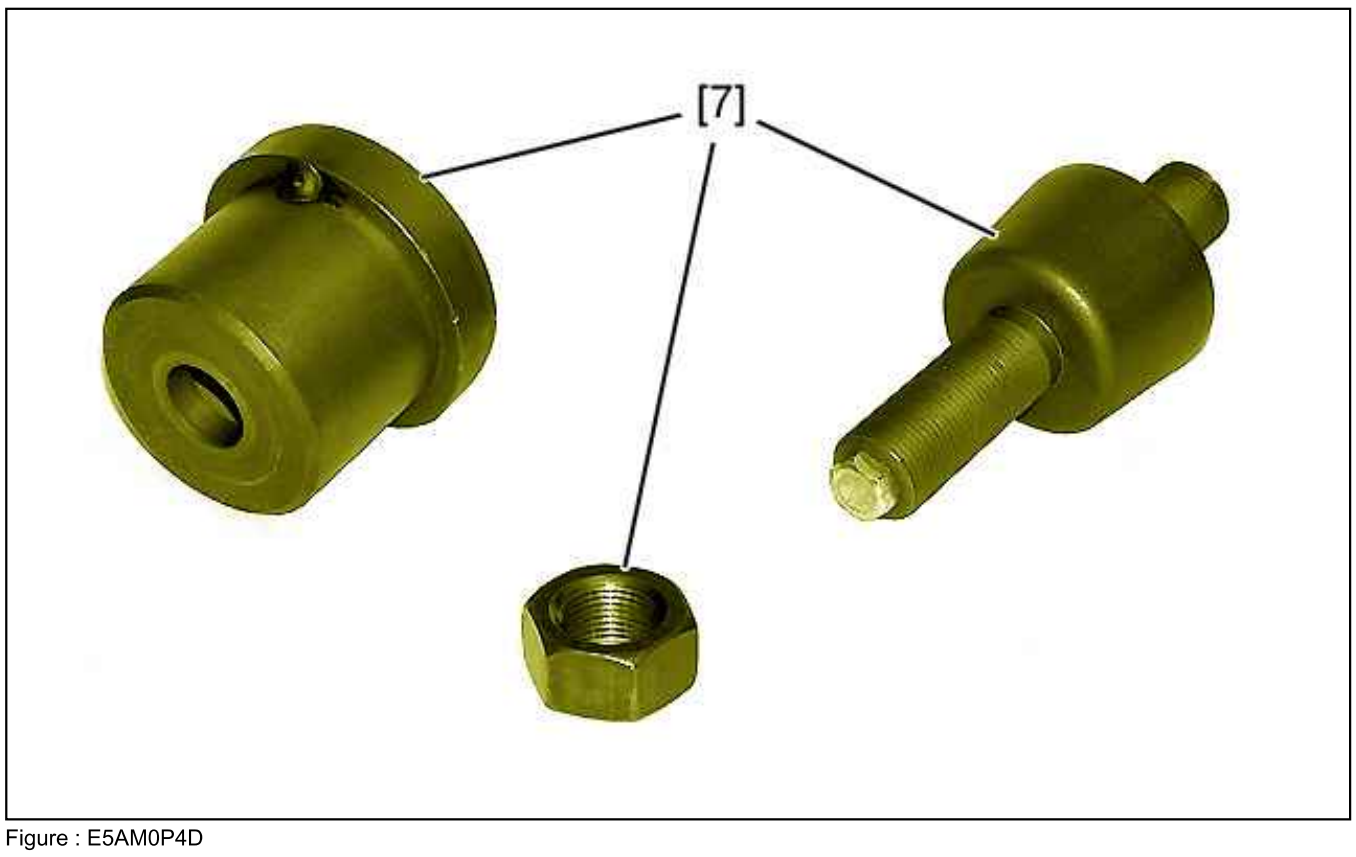

Figure : E5AM0P4D

[7] tool for refitting sealing ring (timing side) (-).0191/2-H.

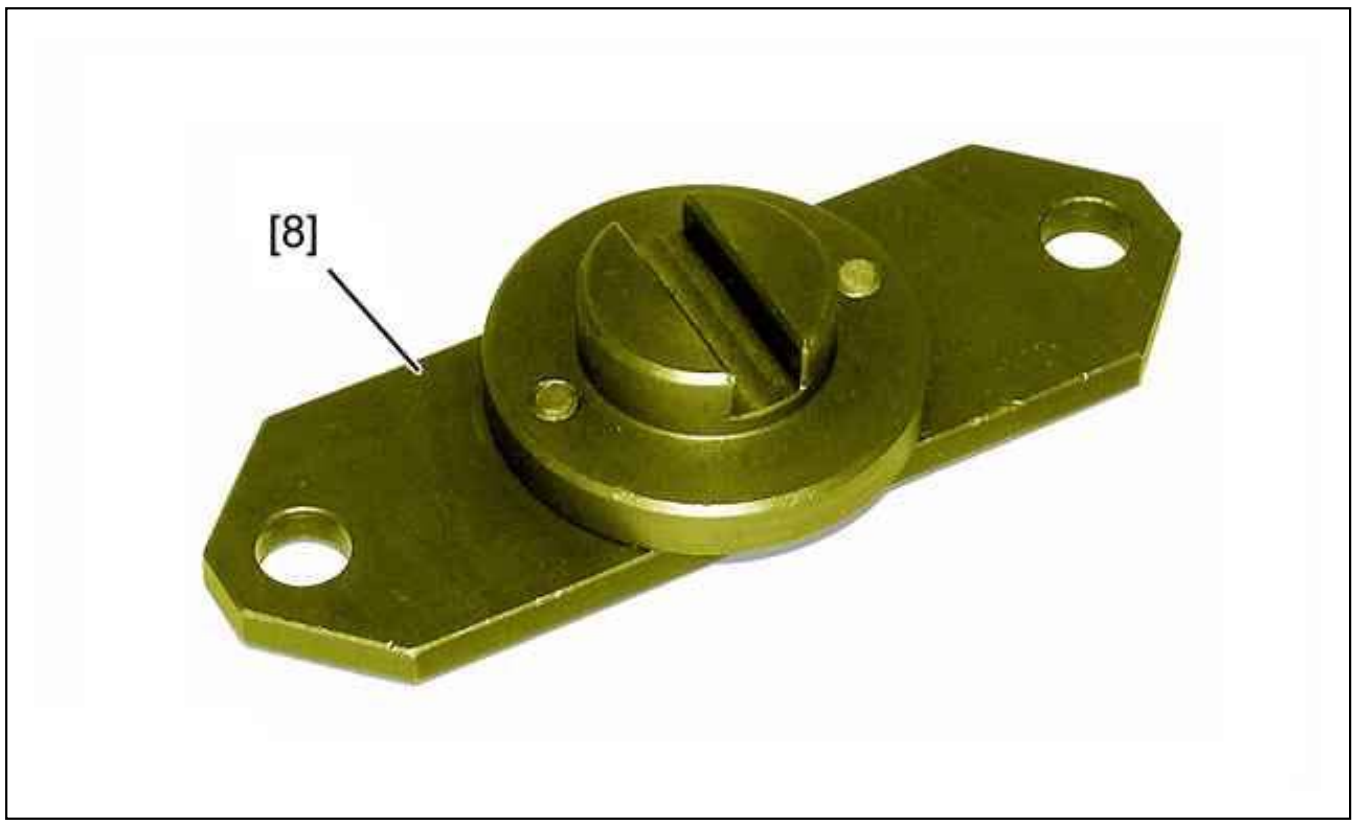

Figure : E5AM0P5D

[8] Tool for immobilising the drive shaft of the power steering pump (-).0191/2-J.

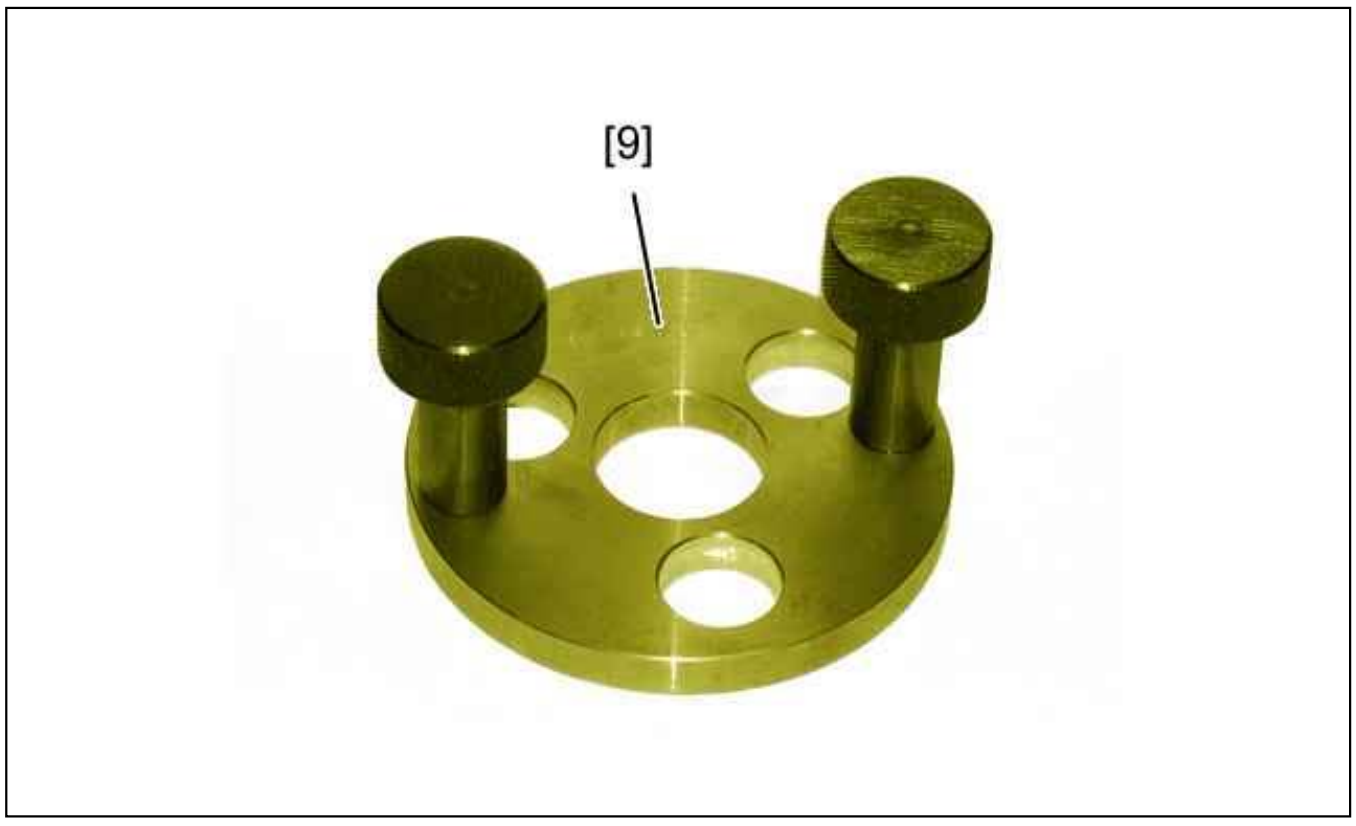

Figure : E5AM0P6D

[9] Timing cover centring pin (-).0191/2-S.

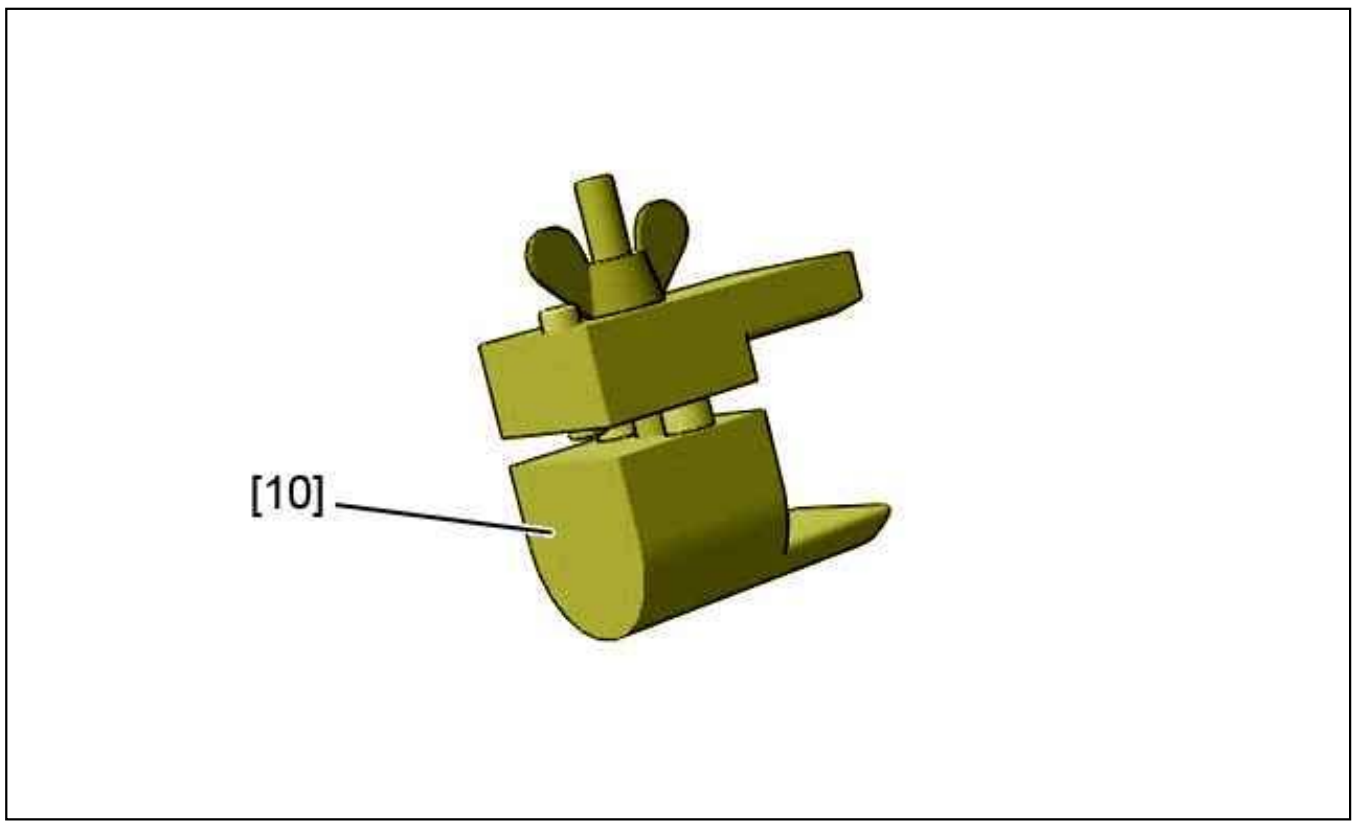

Figure : E5AM0P7D

[10] Elastic auxiliary drive belt removal tool (-).0191/2-AB.

2. Removing

Remove the power unit assembly .

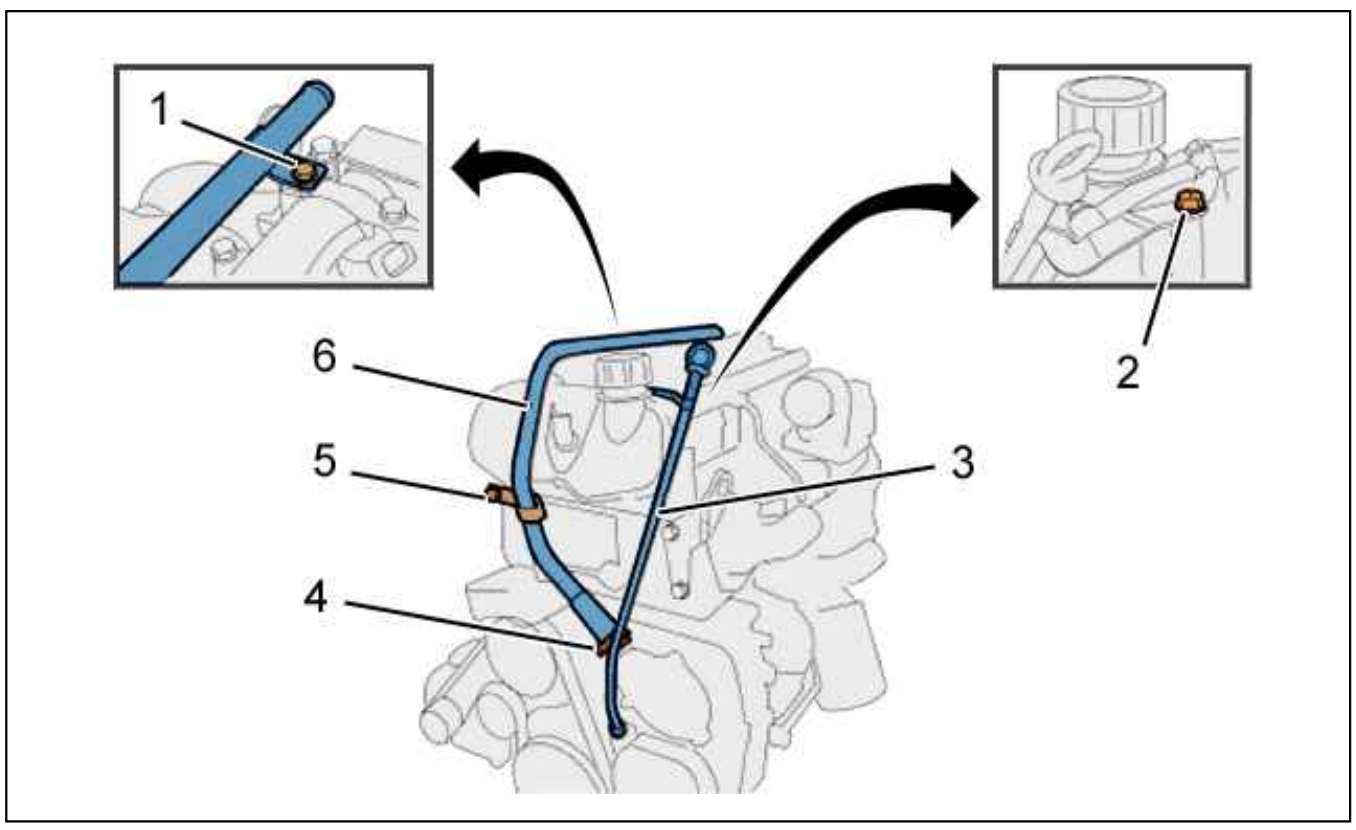

Figure : B1CM00FD

Remove :

- The (2) bolt
- Oil dipstick tube (3) (With the seals)
- The bolts (1), (5)
- The clip (4)
- The tube (6)

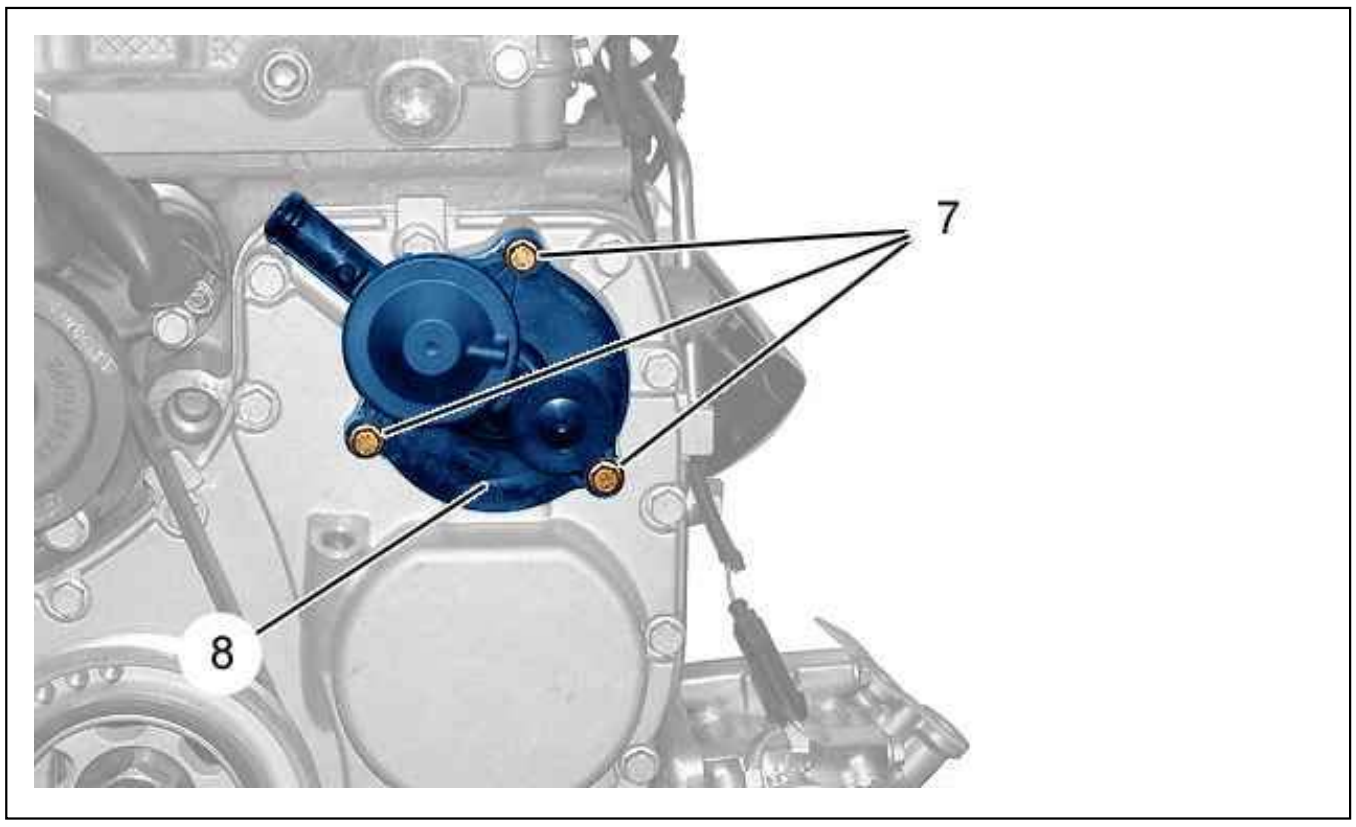

Figure : B1CM00GD

Remove :

- The (7) bolt
- The oil sediment unit (8) (with the seal)

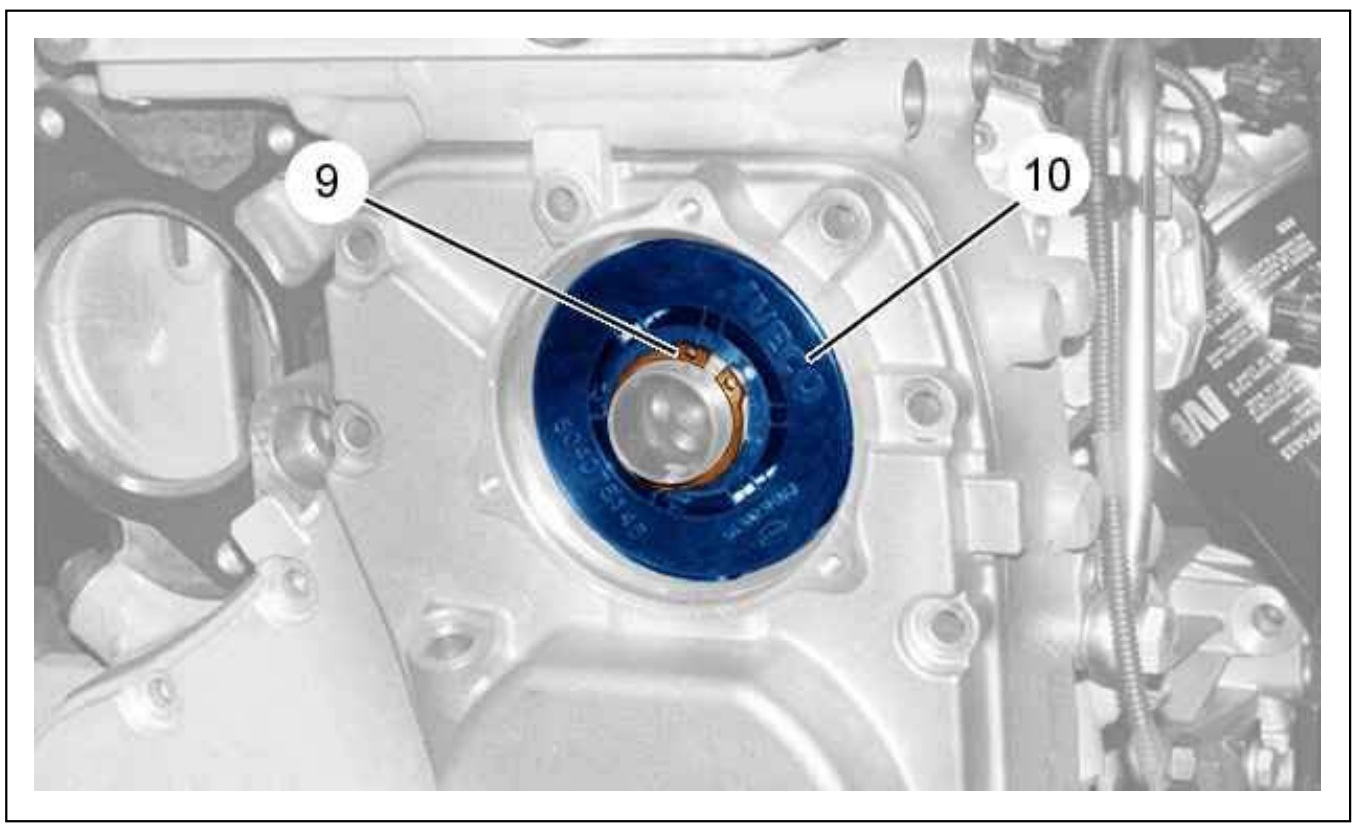

Figure : B1CM00HD

Remove :

- The circlip (9)
- The filler orifice filter (10)

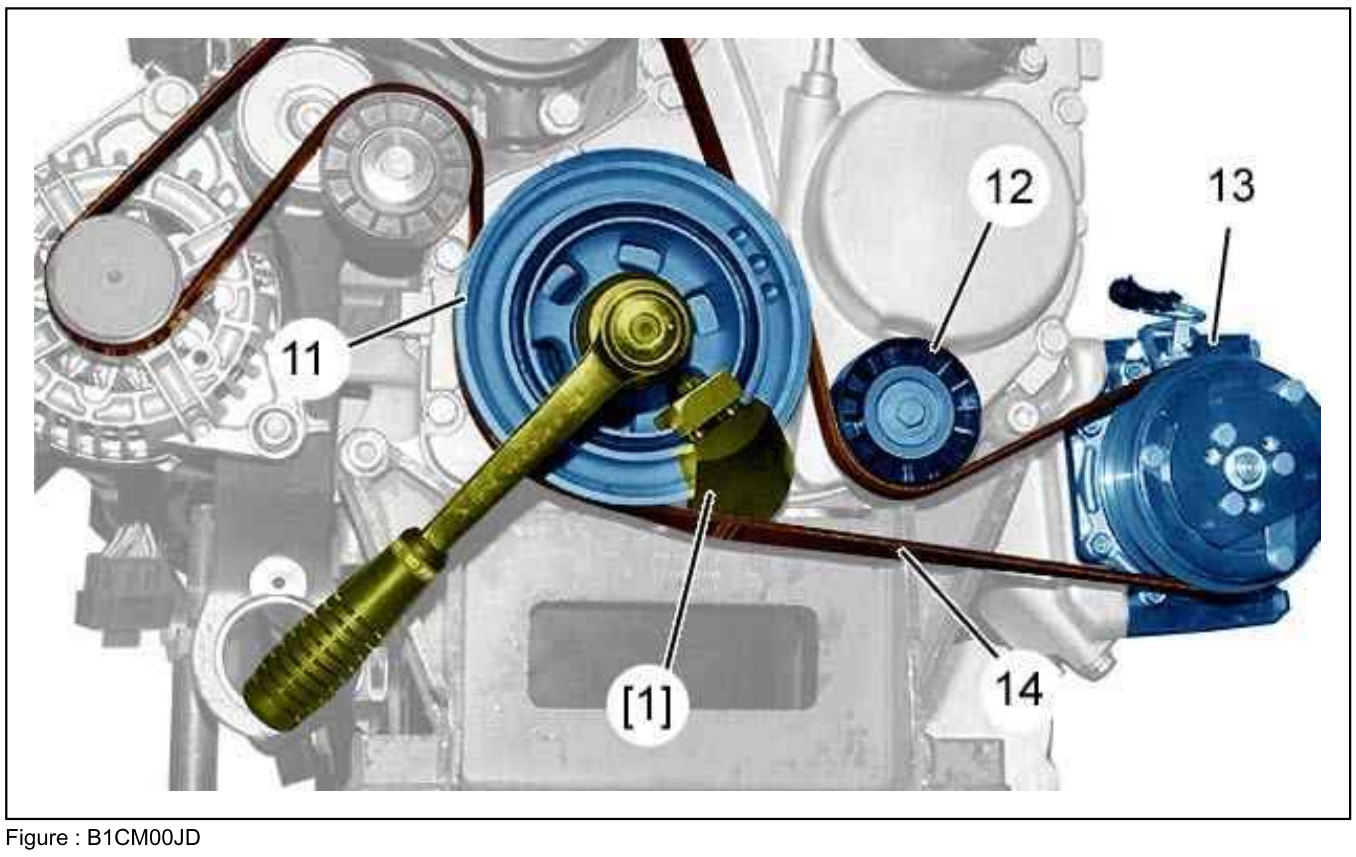

Figure : B1CM00JD

CAUTION : Mark the direction of fitting of the accessories drive belt (14) if it is to be reused.

Position the tool [1] on the crankshaft pulley (11).
Turn the crankshaft pulley (11) until the elastic belt (14) is released (Clockwise).
Remove : (according to equipment) :

- The elastic ancillary belt (14)
- The tensioning roller (12)
- The air conditioning compressor (13)

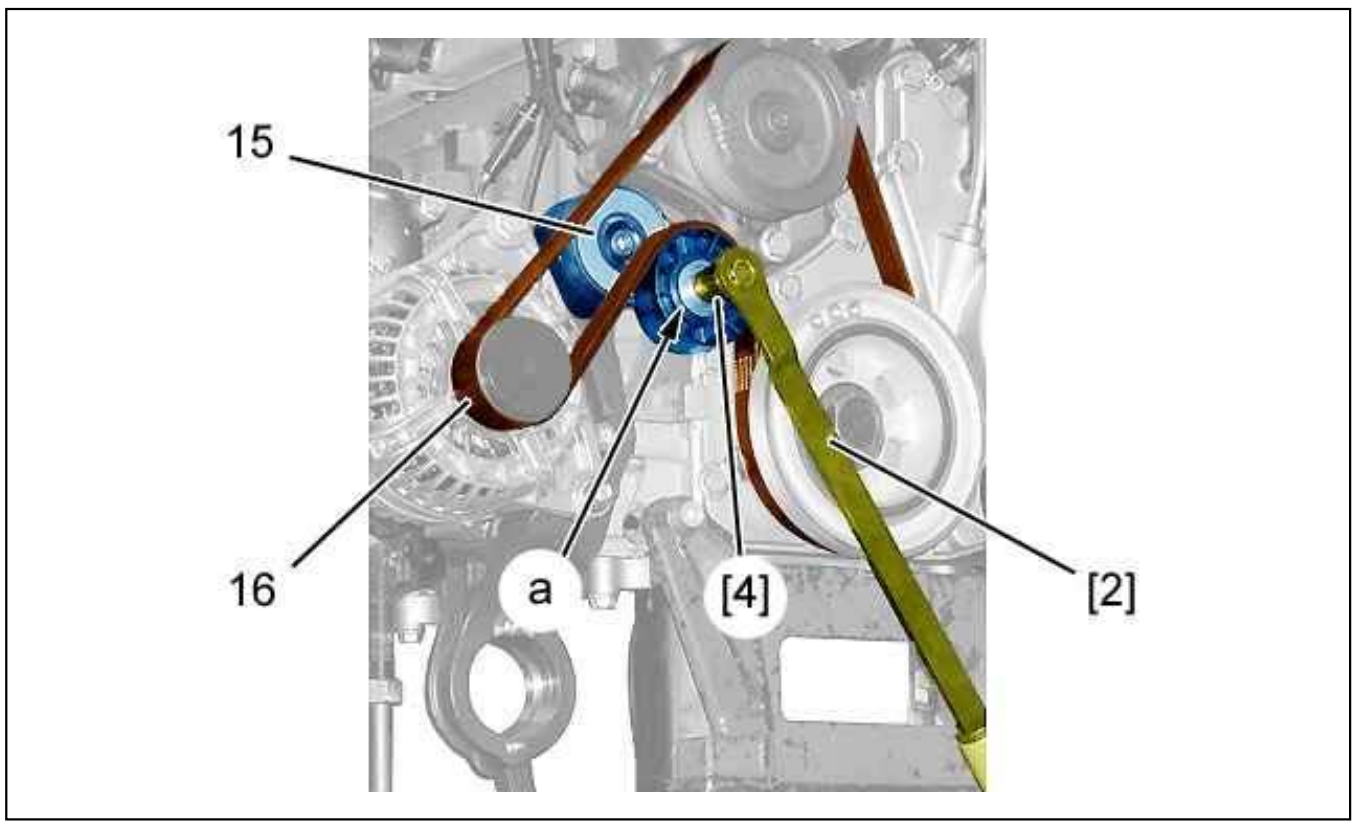

Figure : B1CM00KD

CAUTION : Mark the direction of fitting of the accessories drive belt (16) if it is to be reused.

Compress the dynamic roller tensioner (15) (as "a") (Clockwise) ; Using the tools [2], [4].
Pin the dynamic roller tensioner (15) ; Using tool [3].
Remove the accessories drive belt (16).

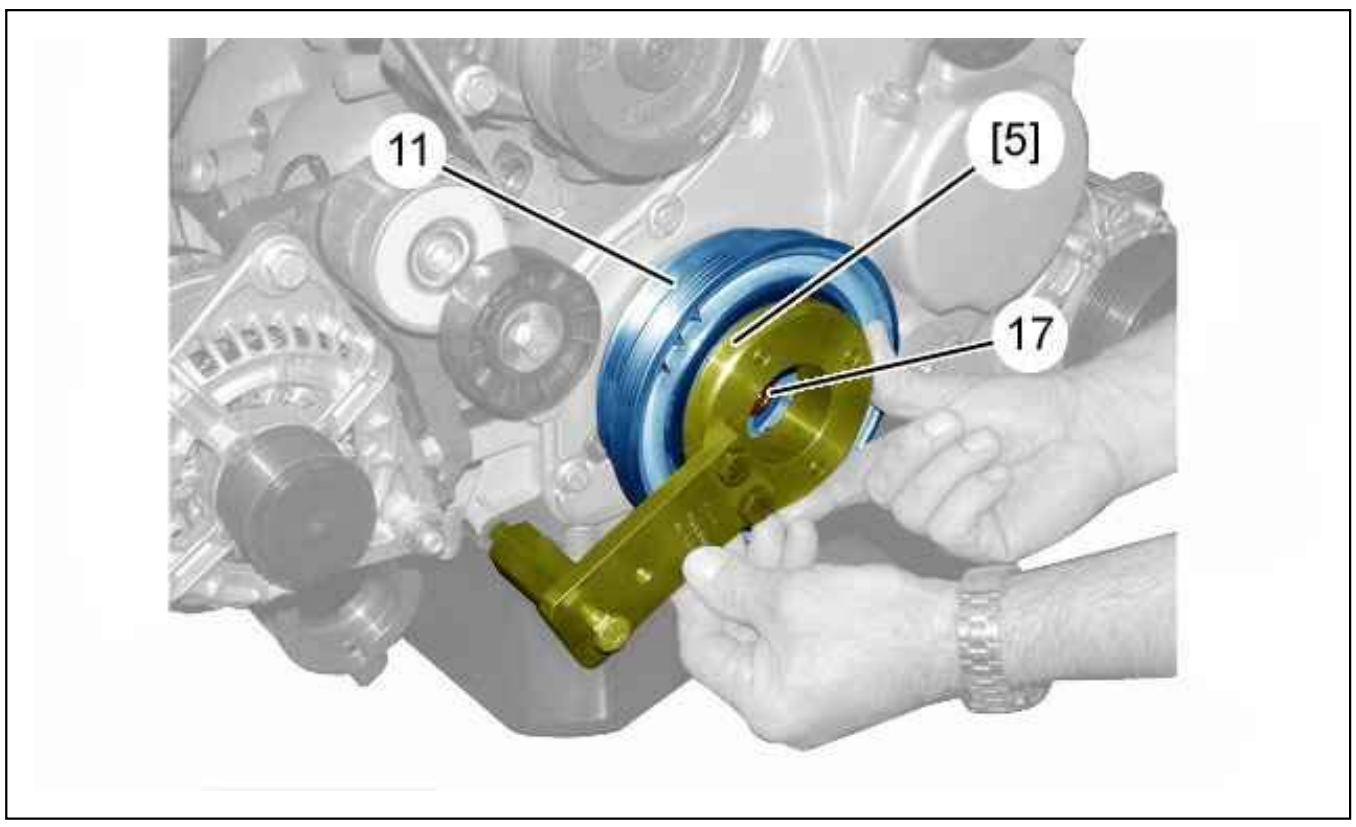

Figure : B1EM0BMD

Immobilise the crankshaft pulley (11) ; Using tool [5].
Remove :

- The (17) bolt
- The tool [5]
- The crankshaft pulley (11)

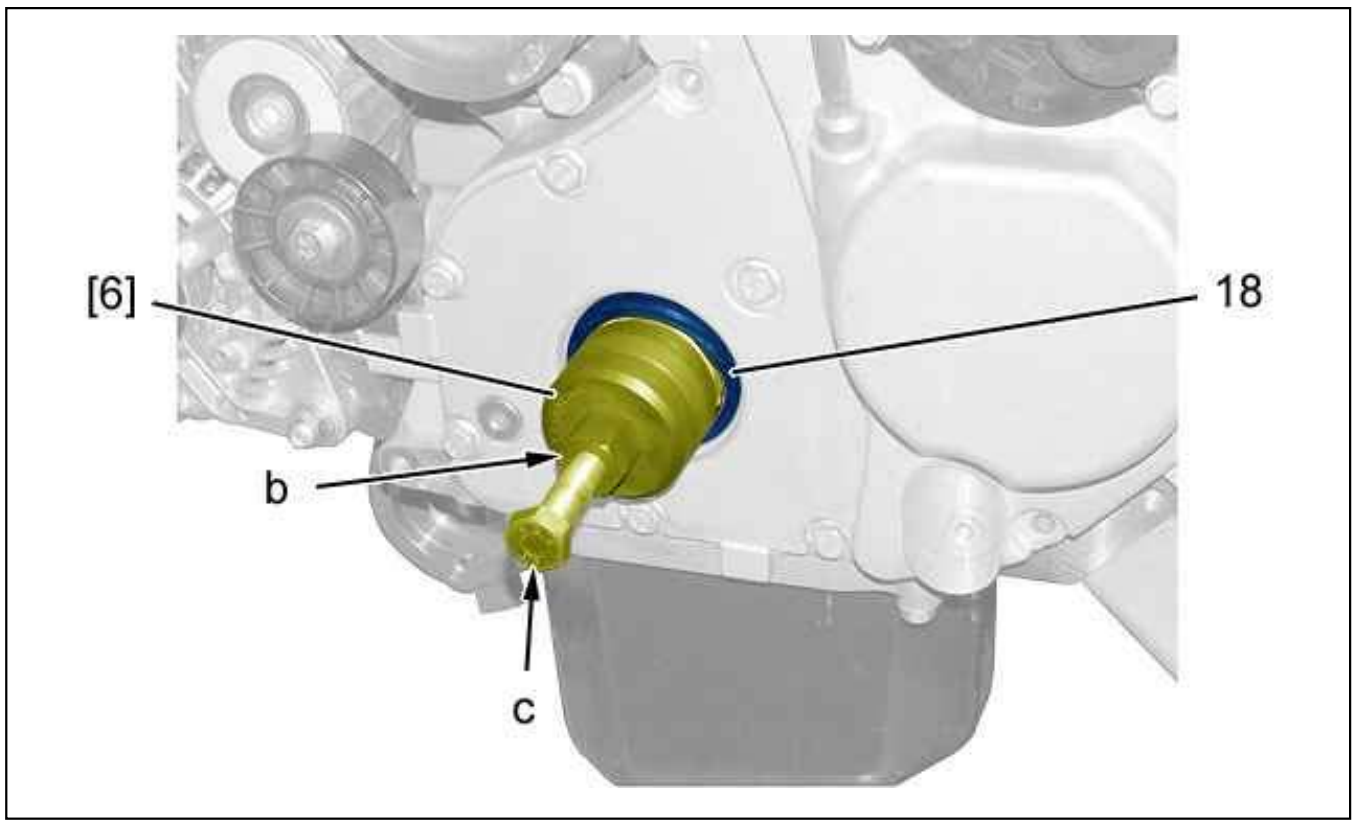

Figure : B1BM1DYD

Screw the tool [6] in the sealing ring (18).
Immobilise the tool [6] (as "b").
Extract the seal (18) ; Using tool [6] (as "c") (Turn the bolt).

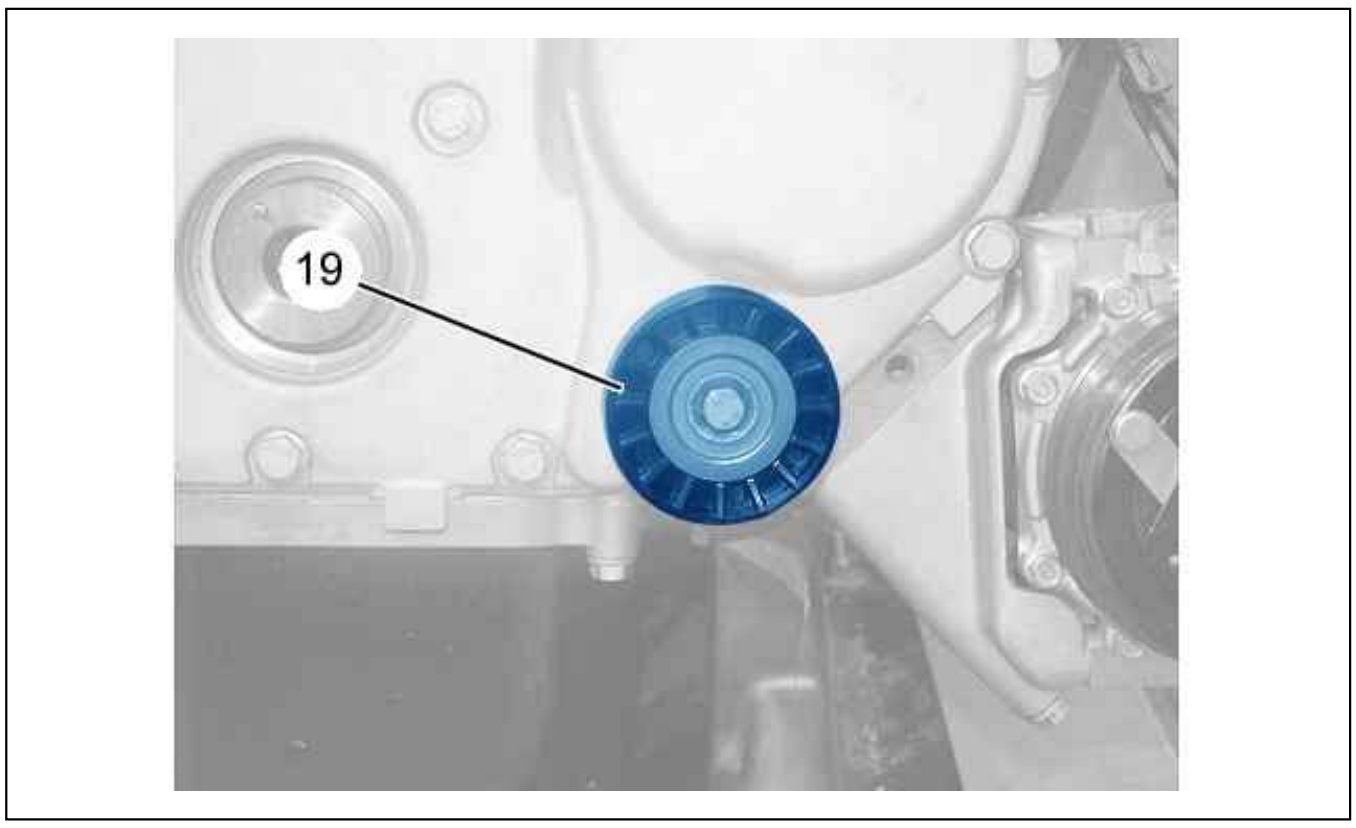

Figure : B1BM1DZD

Remove the roller tensioner (19).

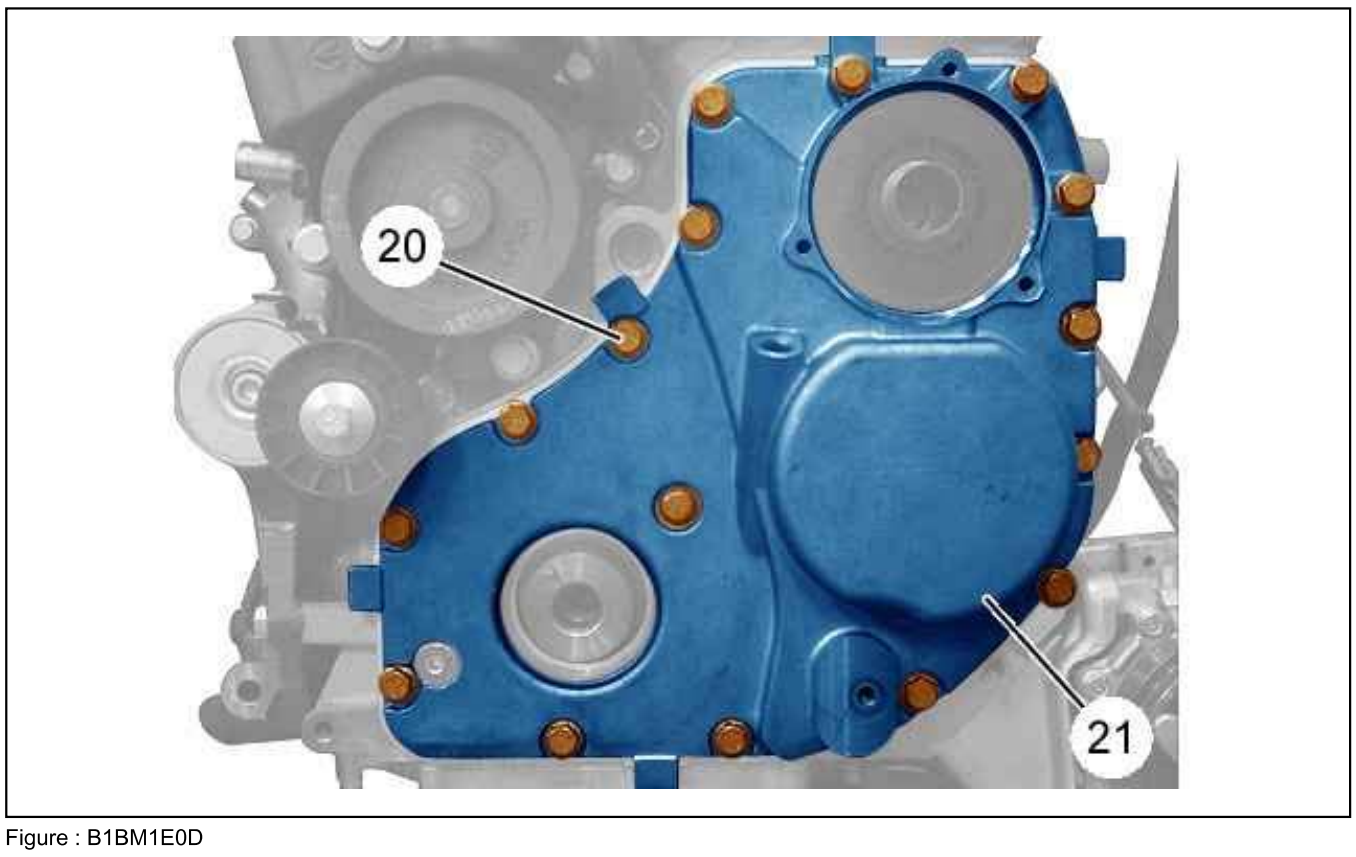

Figure : B1BM1E0D

Remove :

- The 16 bolts (20)
- The timing cover (21) and its seal

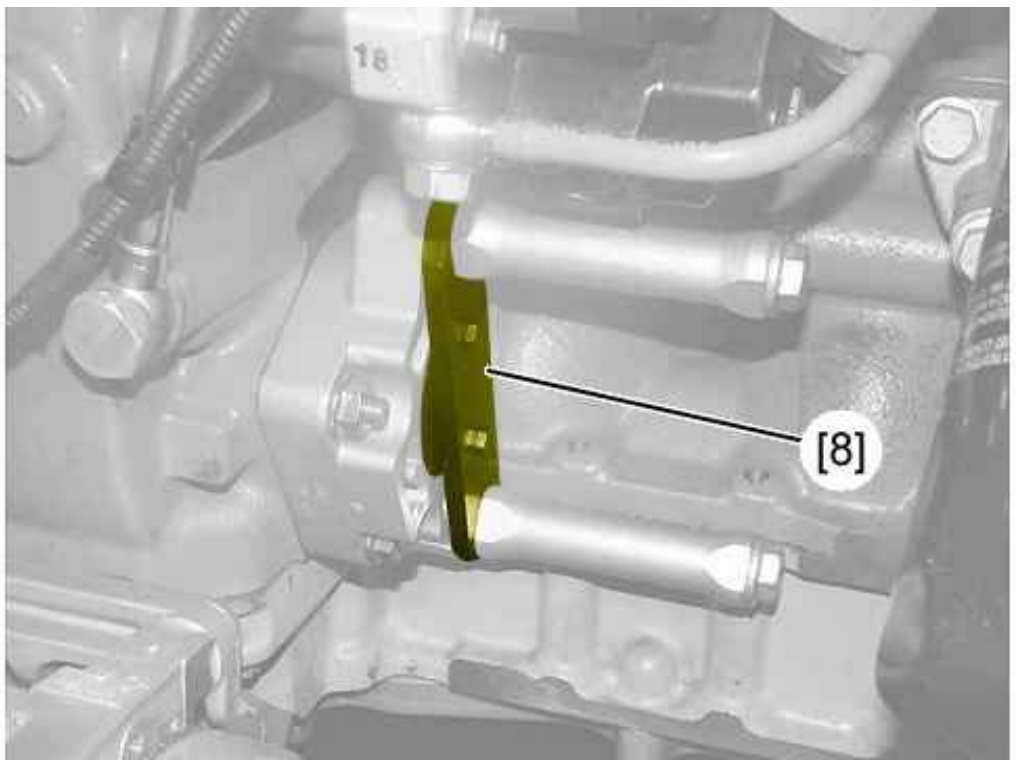

Figure : B1BM1E1D

Immobilise the sprocket of the power steering pump ; Using tool [8] and power steering pump fixing bolts.

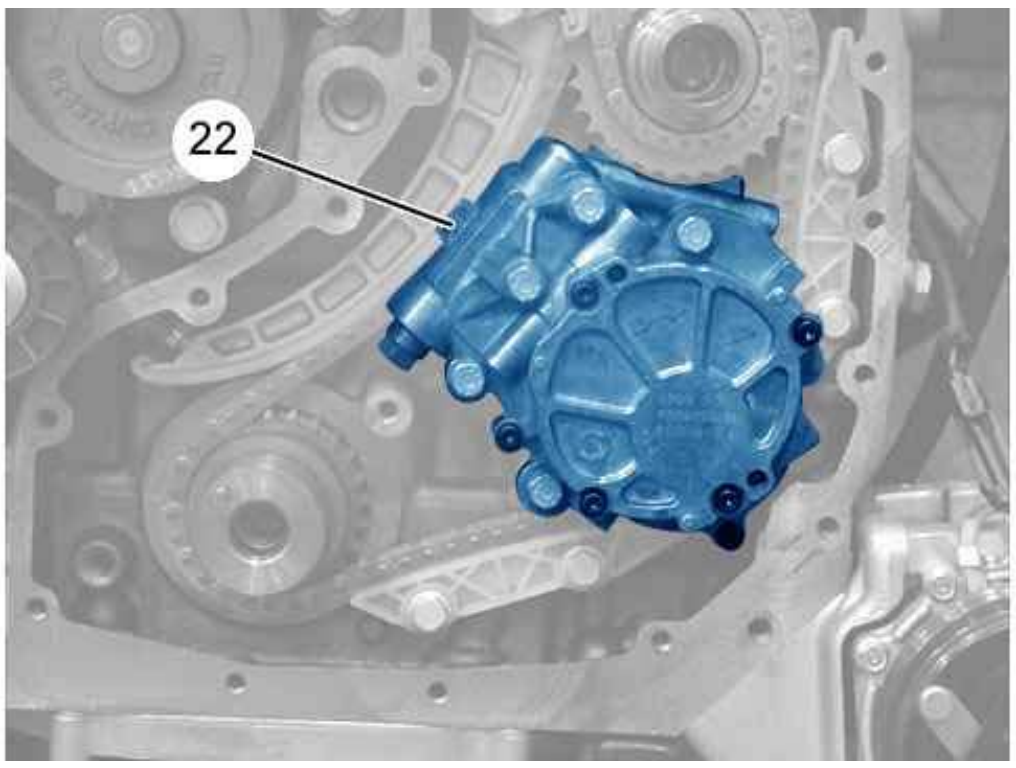

Figure : B1BM1E2D

Remove : The oil pump (22) and its seal .

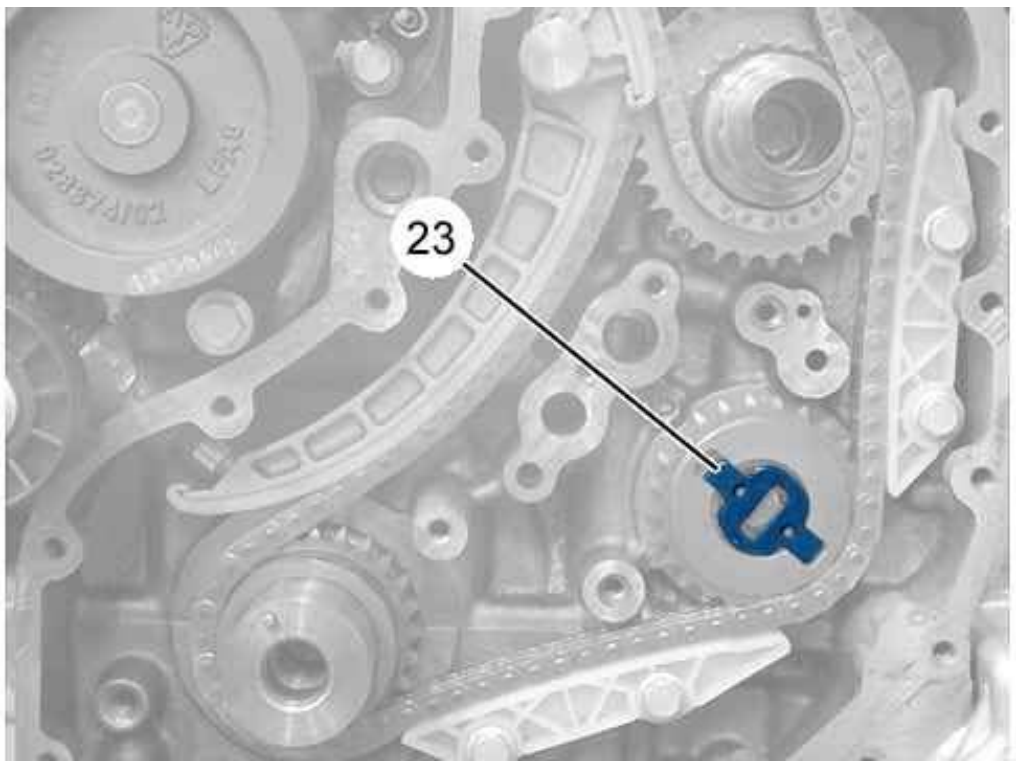

Figure : B1BM1E3D

Remove : The oil pump coupling ring (23).

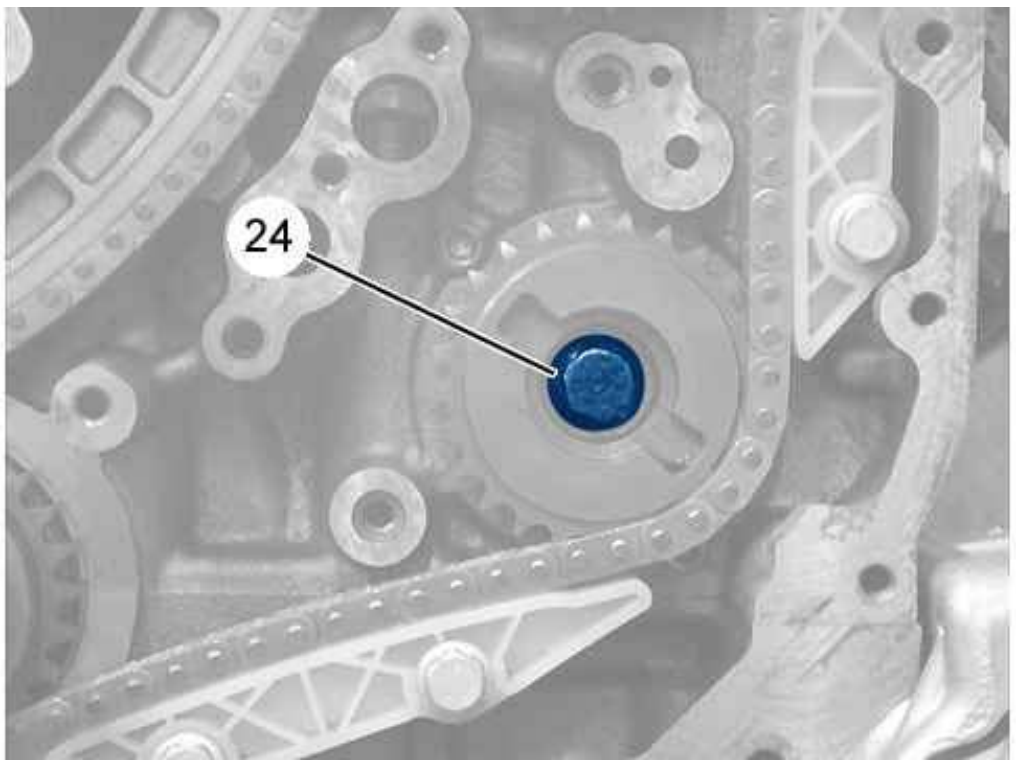

Figure : B1BM1E4D

Remove bolts (24).

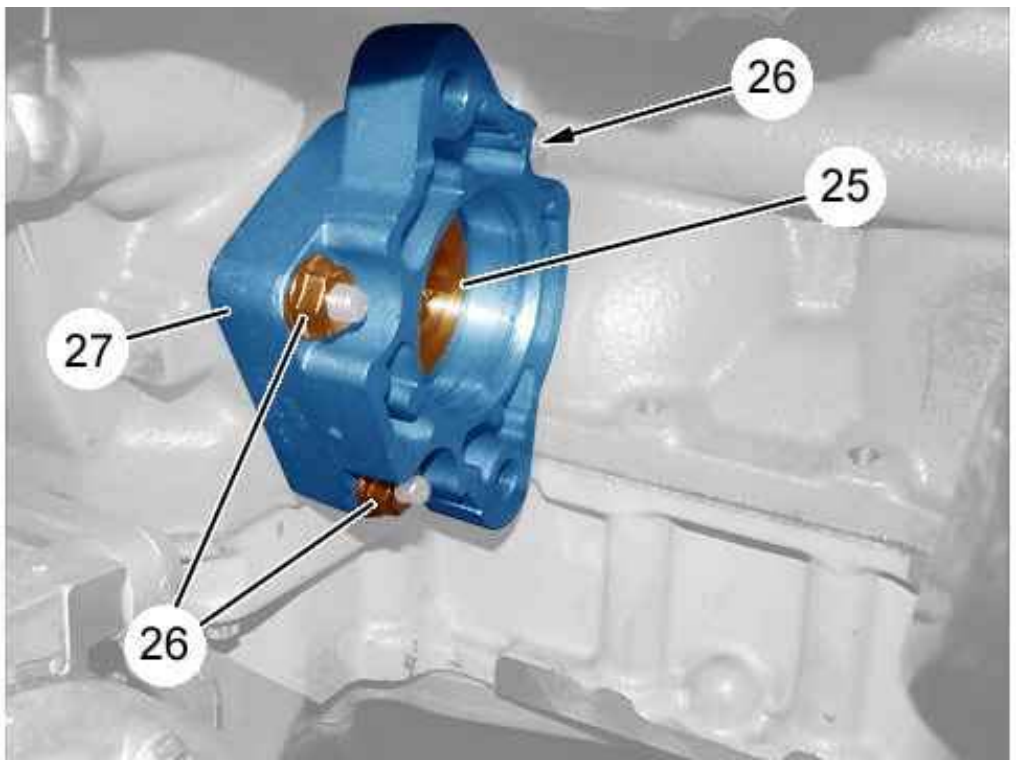

Figure : B1BM1E5D

Remove the tool [8].
Detach : The oil pump shaft (25).
Remove :

- The bolts (26)
- The pump support (27)

3. Refitting

CAUTION : Replace : The pump mounting O-rings.

Refit :

- The pump support (27) (together with its seals) (new)
- The bolts (26) ; Tighten to 2,5 ± 0,3 daN.m

Engage : The oil pump shaft (25).
Immobilise the sprocket of the power steering pump ; Using tool [8] and power steering pump fixing bolts.
Refit :

- The (24) bolt ; Tighten to 13 ± 1,3 daN.m
- The oil pump coupling ring (23)
- The oil pump (22) and its seal (new) ; Tighten to 2,5 ± 0,3 daN.m

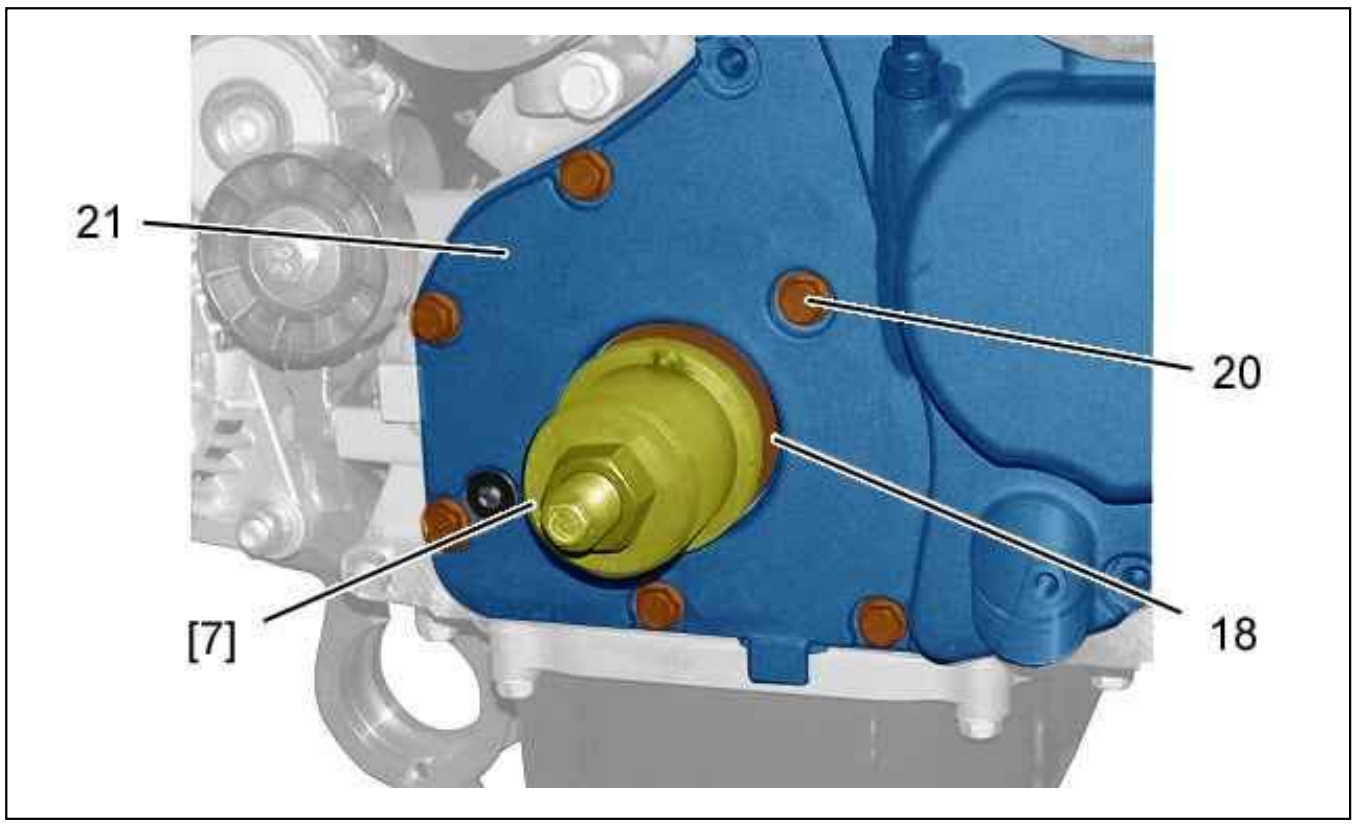

Figure : B1BM1E6D

Refit :

- The timing cover (21) and its seal (new)
- The 16 bolts (20) (Screw in without tightening) (by hand)
- The crankshaft sealing ring (18) (new) ; Using tool [7]

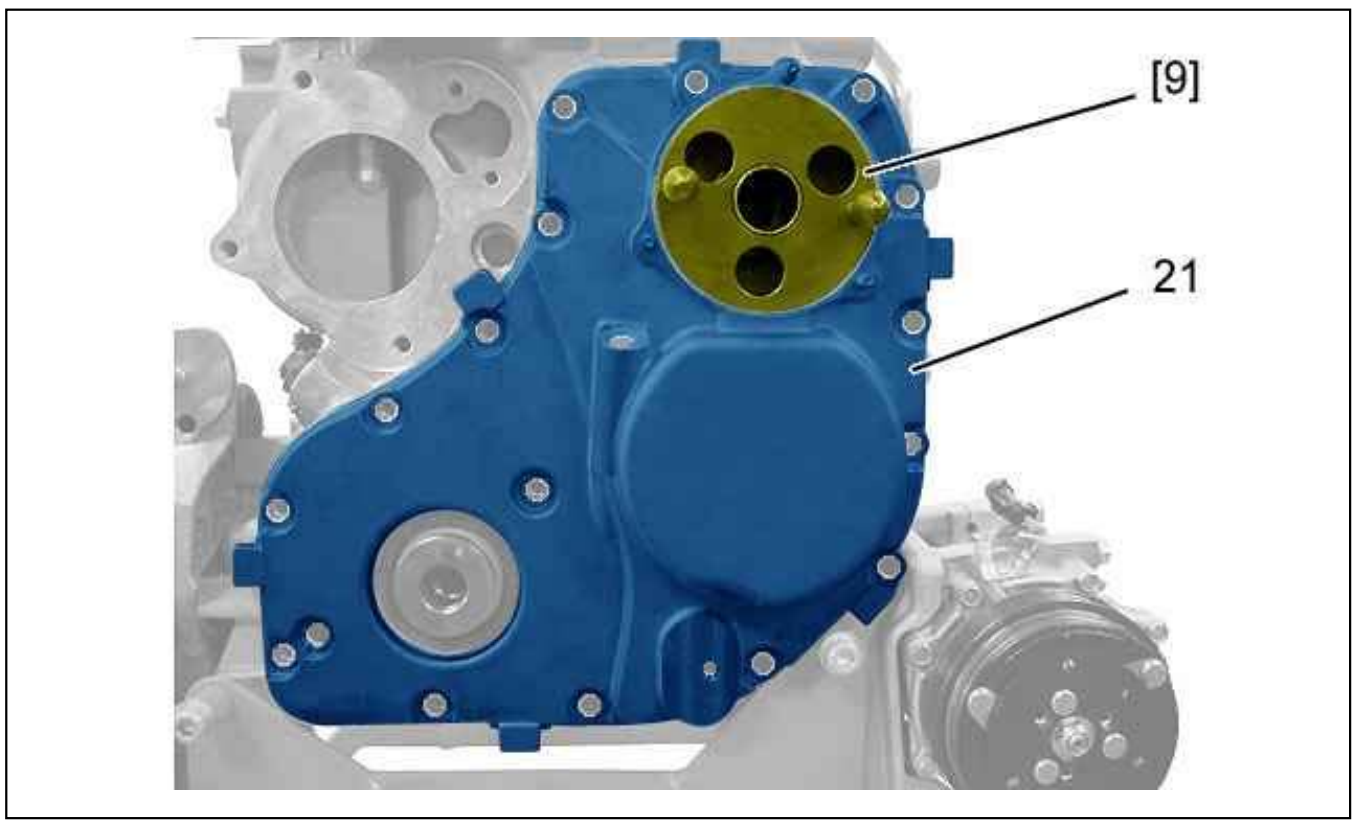

Figure : B1EM0BND

Centre the timing cover (21) ; Using tool [9].
Tighten the bolts (20) to 2,5 ± 0,3 daN.m.
Remove the tool [9].

Refit :

- The tensioning roller (19)
- The crankshaft pulley (11)
- The (17) bolt (Screw in without tightening)

Immobilise the crankshaft pulley (11) ; Using tool [5].
Tighten the bolt (17) to 35 ± 3,5 daN.m.

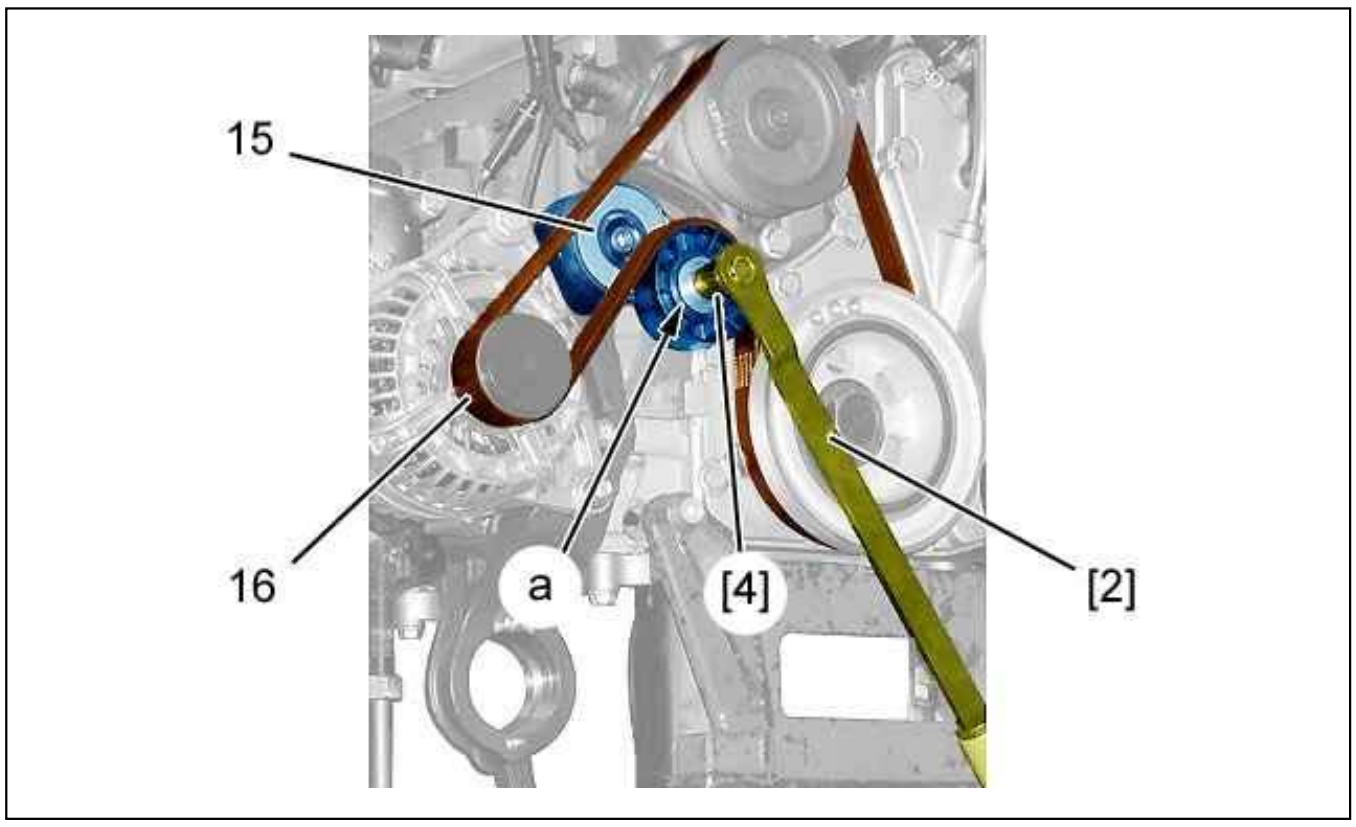

Figure : B1CM00KD

CAUTION : When reusing flexible accessory drive belts, refit them in the fitting direction identified when they were removed.

Compress the dynamic roller tensioner (15) (as "a") (Clockwise) ; Using the tools [2], [4].
Refit the ancillary belt (16).

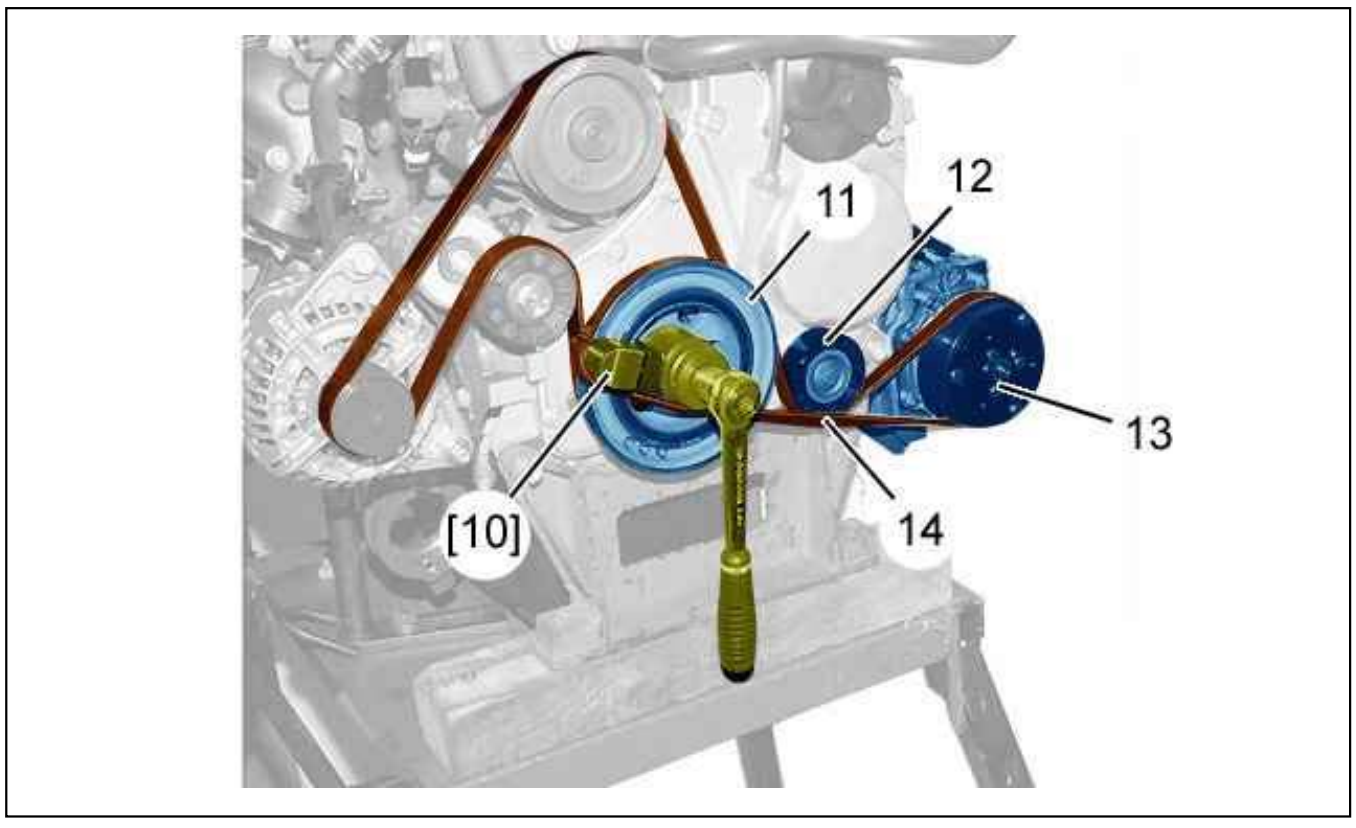

Figure : B1BM1E7D

Refit :

- The tensioning roller (12) ; Tightening to 2,5 ± 0,3 daN.m
- The air conditioning compressor (13) ; Tightening to 2,5 ± 0,3 daN.m
- The elastic ancillary belt (14)

Fit tool [10] to the crankshaft pulley (11).
Turn the crankshaft pulley (11) until the elastic belt (14) is fitted fully and the tool [10] is released (Anti-clockwise).
Remove the tool [10].

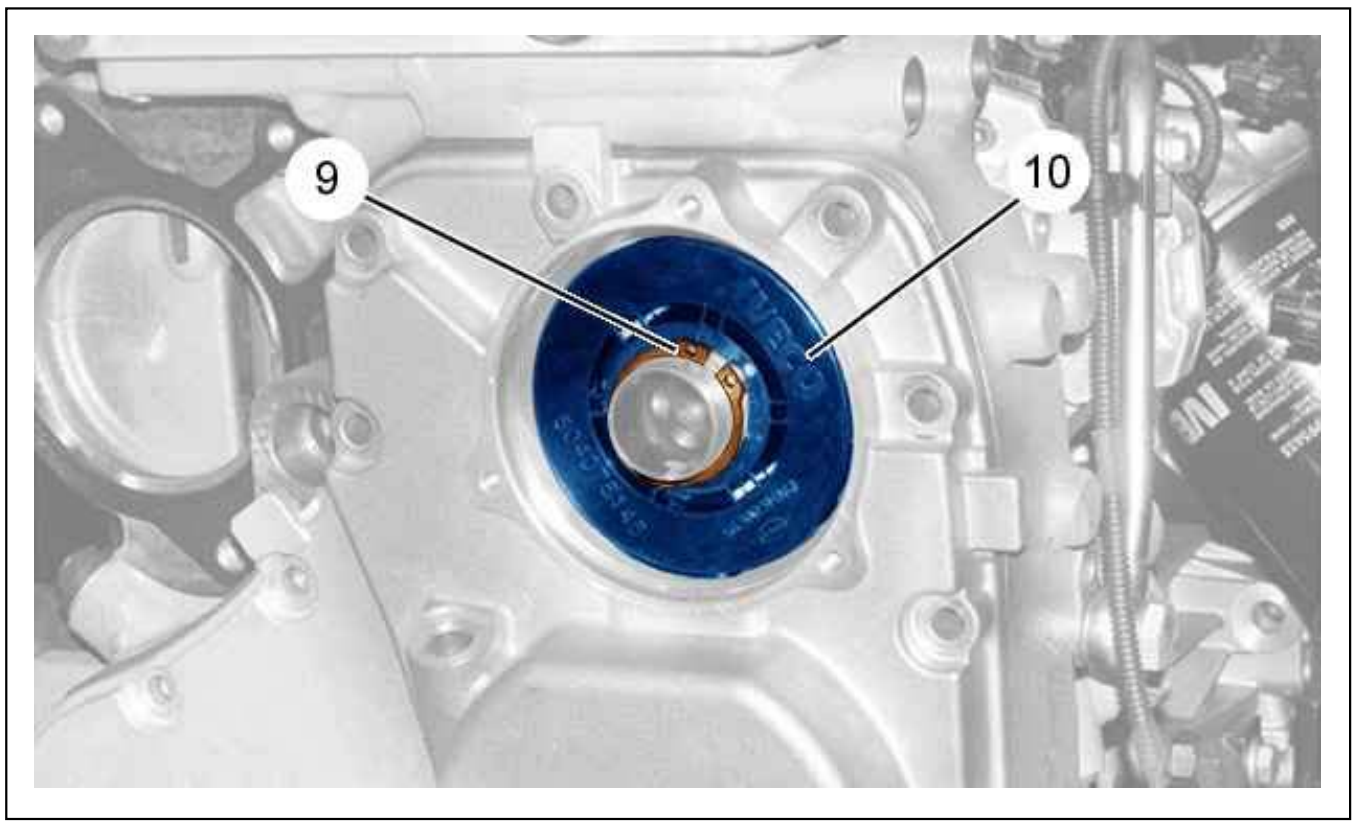

Figure : B1CM00HD

Refit :

- The filler orifice filter (10) (new)
- The circlip (9) (new)

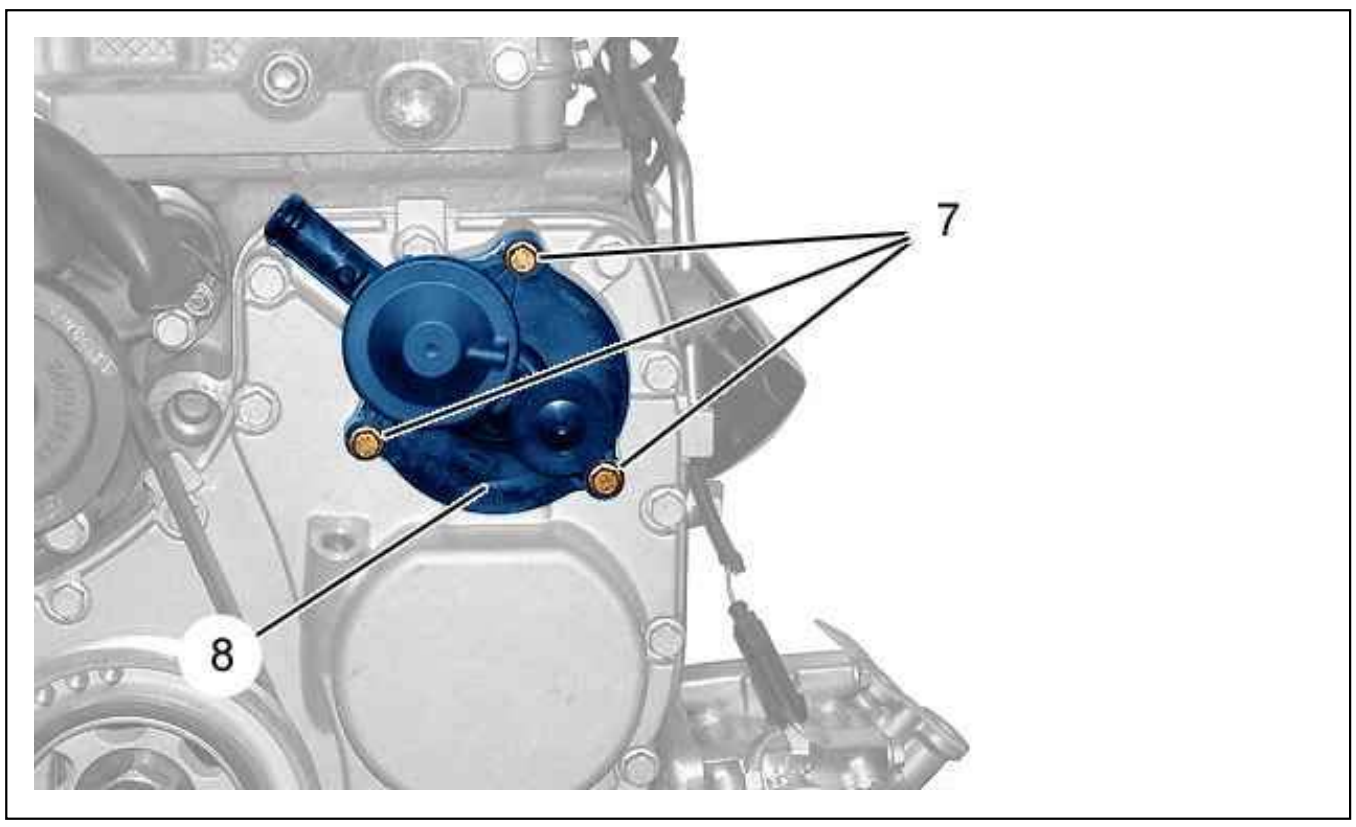

Figure : B1CM00GD

CAUTION : Lubricate the oil filler orifice seal .

Refit :

- The oil sediment unit (8) (new seal)
- The (7) bolt ; Tighten to 1 ± 0,1 daN.m

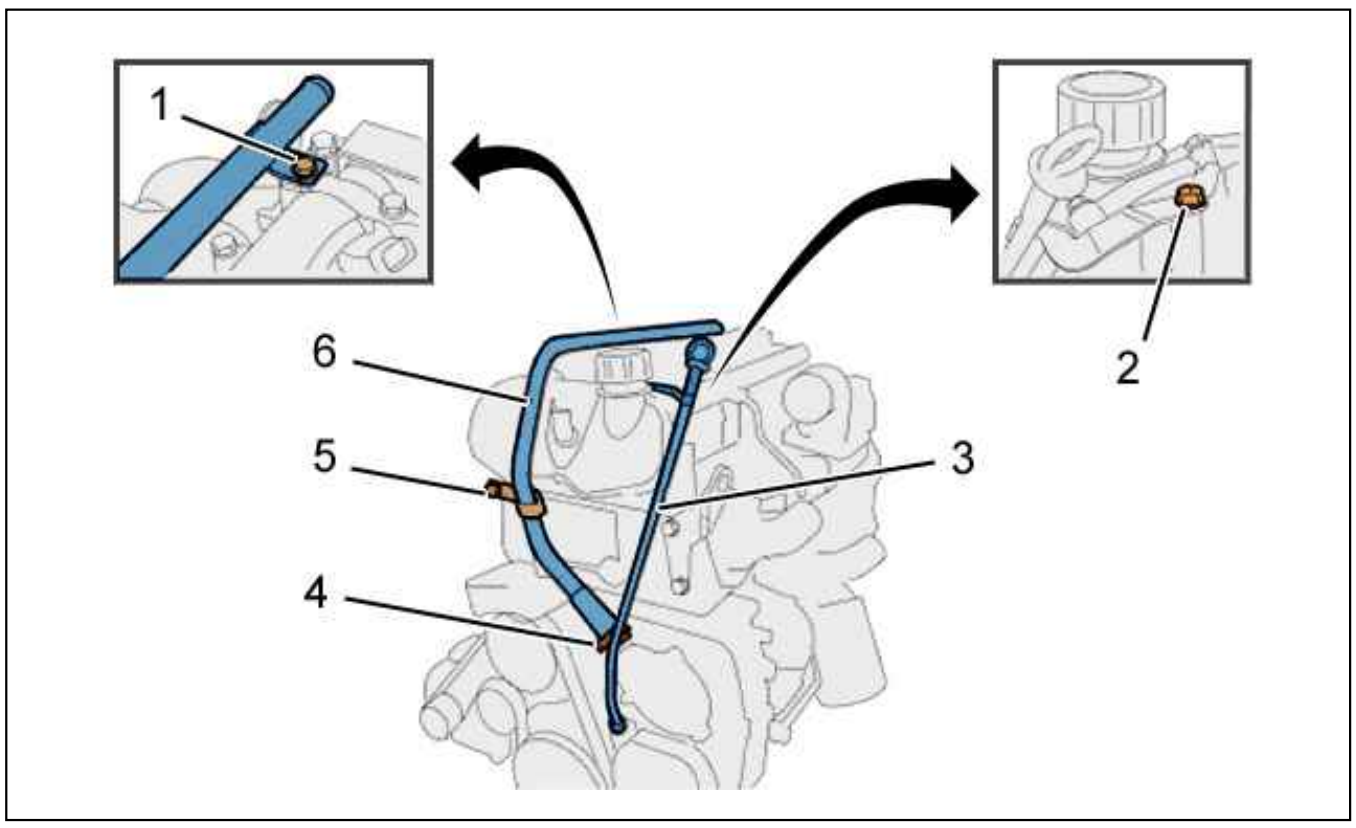

Figure : B1CM00FD

Refit :

- The tube (6)
- The bolts (1), (5) ; Tighten to 2,8 ± 0,3 daN.m
- The clip (4) (new)
- Oil dipstick tube (3) (new seal)
- The (2) bolt ; Tighten to 1 ± 0,1 daN.m

DRAIN AND REFILL - REFILLING - BLEEDING : POWER STEERING CIRCUIT

1. Drain and refill

Unscrew the power steering reservoir cap .
Raise the vehicle and support on axle stands, wheels free.

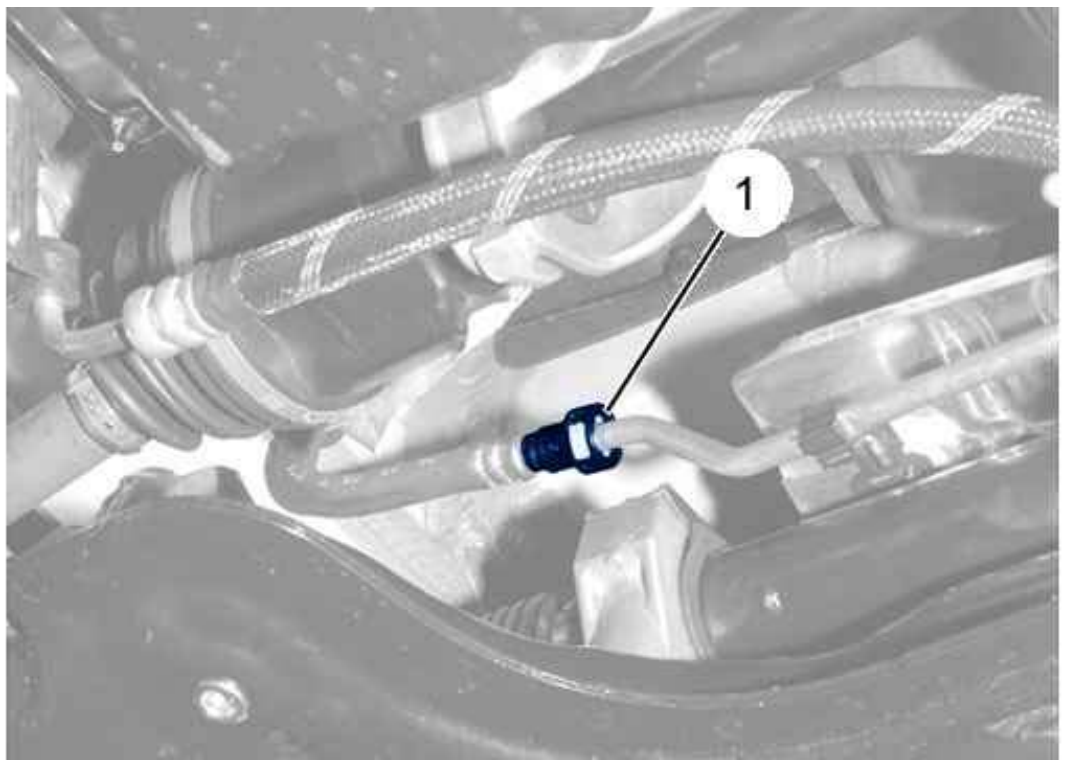

Figure : B3FP7NUD

Uncouple the low pressure pipe union (1).
Turn the steering in both directions, from lock to lock.
Recover the power steering fluid.
Plug the low pressure pipe union (1).

N.B. : Do not re-use the power steering fluid.

2. Refilling

Use fresh power steering fluid.
Oil quality : TUTELLA GI/E.

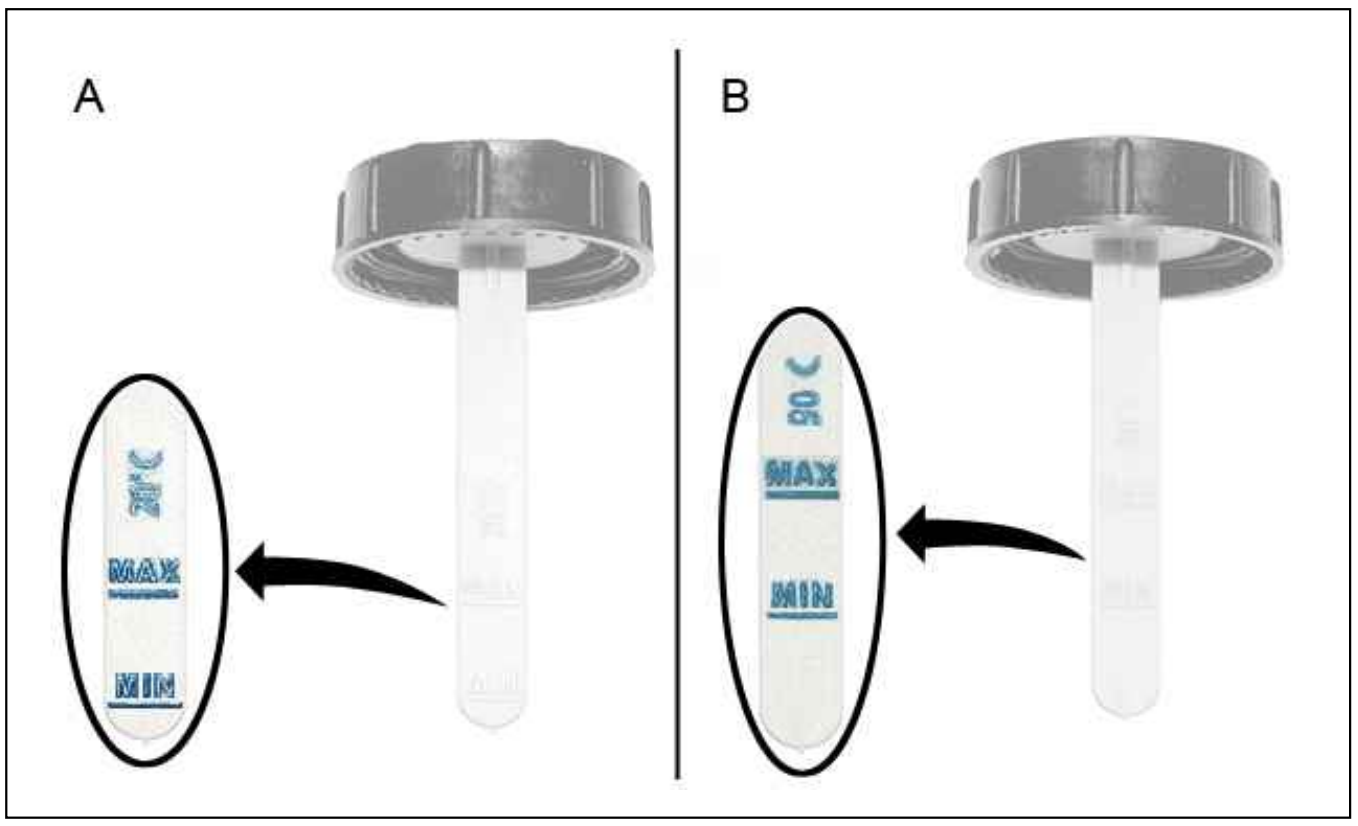

Figure : B3EP19CD

"A" : Power steering fluid level when cold (20 °C).
"B" : Power steering fluid level when warm (90 °C).
Fill the power steering fluid reservoir to the maximum level.

3. Bleeding

N.B. : Return the vehicle to its wheels.

Engine stopped :

- Fill the power steering fluid reservoir to the maximum level (If necessary)
- Turn the steering in both directions, from lock to lock (3 times minimum)
- Top up the power steering fluid to the maximum level (If necessary)

engine running :

- Wait one minute
- Top up the power steering fluid to the maximum level (If necessary)
- Move the steering from lock to lock, until there is no point of resistance

Stop the engine.
Top up the power steering fluid to the maximum level.
Check there are no leaks.

TIGHTENING TORQUES : SUSPENSION

1. Front suspension

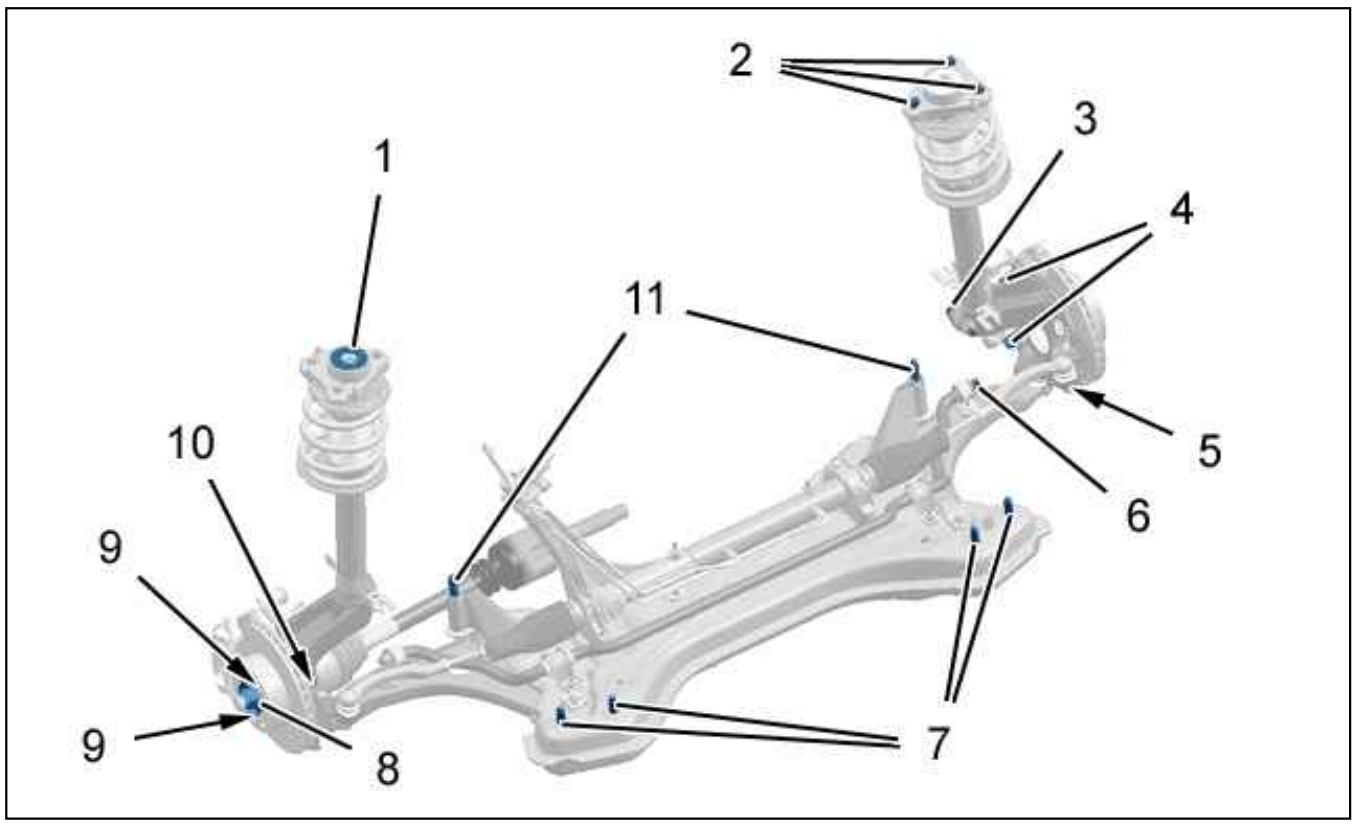

Figure : B3BB04QD

Reference	Designation	Tightening torque
(1)	nut - Damper rod	9 daNm
(2)	Fixing bolts for front strut on body	6 daNm
(3)	bolts - Damper on front hub carrier	12 daNm
(4)	bolts - Yoke on brake caliper	21 daNm
(5)	nut - Steering ball joint on front hub carrier	8 daNm
(6)	nut - Anti-roll bar transfer bar	5,6 daNm
(7)	Rear bolts - Front subframe	29 daNm
(8)	Hub nut	15 daNm+ 35°
(9)	bolts - Front brake disc	1,2 daNm
(10)	bolts - Front wheel sensor	0,8 daNm
(11)	Front bolts - Front subframe	29 daNm

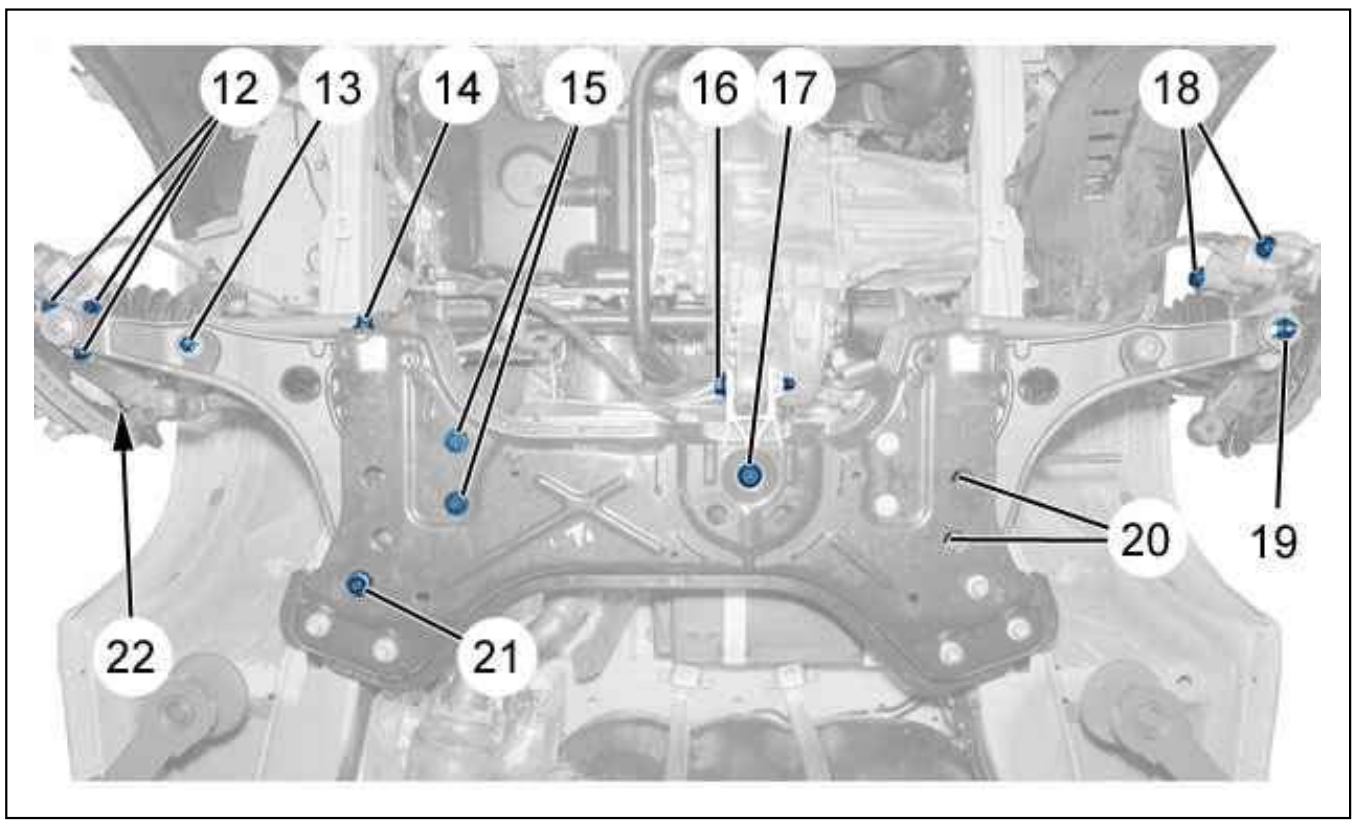

Figure : B3CP0C0D

Reference	Designation	Tightening torque
(12)	bolts - Front hub carrier ball-joint	11,5 daNm
(13)	nut - Anti-roll bar transfer bar	5,6 daNm
(14)	Horizontal bolt - Suspension arm on front subframe	32 daNm
(15)	bolts - Steering mechanism	11 daNm
(16)	bolts - Torque reaction rod on gearbox	29 daNm
(17)	bolts - Torque reaction rod on front subframe	29 daNm
(18)	bolts - front brake caliper	3,4 daNm
(19)	nut - Hub carrier ball joint on suspension arm	15 daNm
(20)	Anti-roll bar bearing fixing on front subframe	5 daNm

(21)	Vertical bolt - Suspension arm on front subframe	32 daNm
(22)	bolts - Heat shield on front hub carrier	2,5 daNm

2. Rear suspension

2.1. With metallic suspension

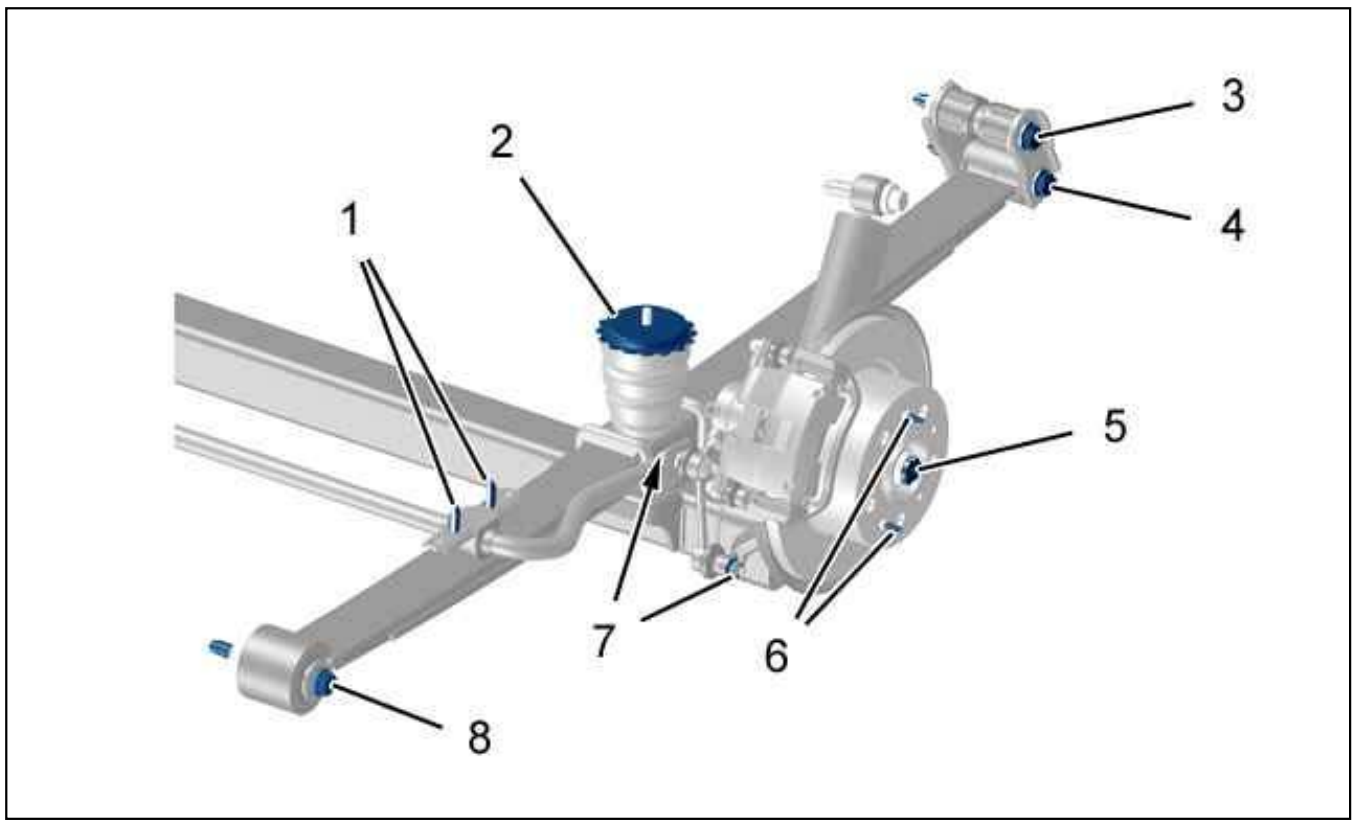

Figure : B3BB04RD

Reference	Designation	Tightening torque
(1)	bolts - Anti-roll bar bearing	19 daNm
(2)	Movement stop	3 daNm
(3)	bolts - Suspension blade yoke	14,5 daNm
(4)	bolts - Suspension blade	14,5 daNm
(5)	Hub nut	45 daNm
(6)	bolts - Rear brake disc	1,2 daNm
(7)	nuts - Anti-roll bar rod	3 daNm
(8)	bolts - Suspension blade	18,5 daNm

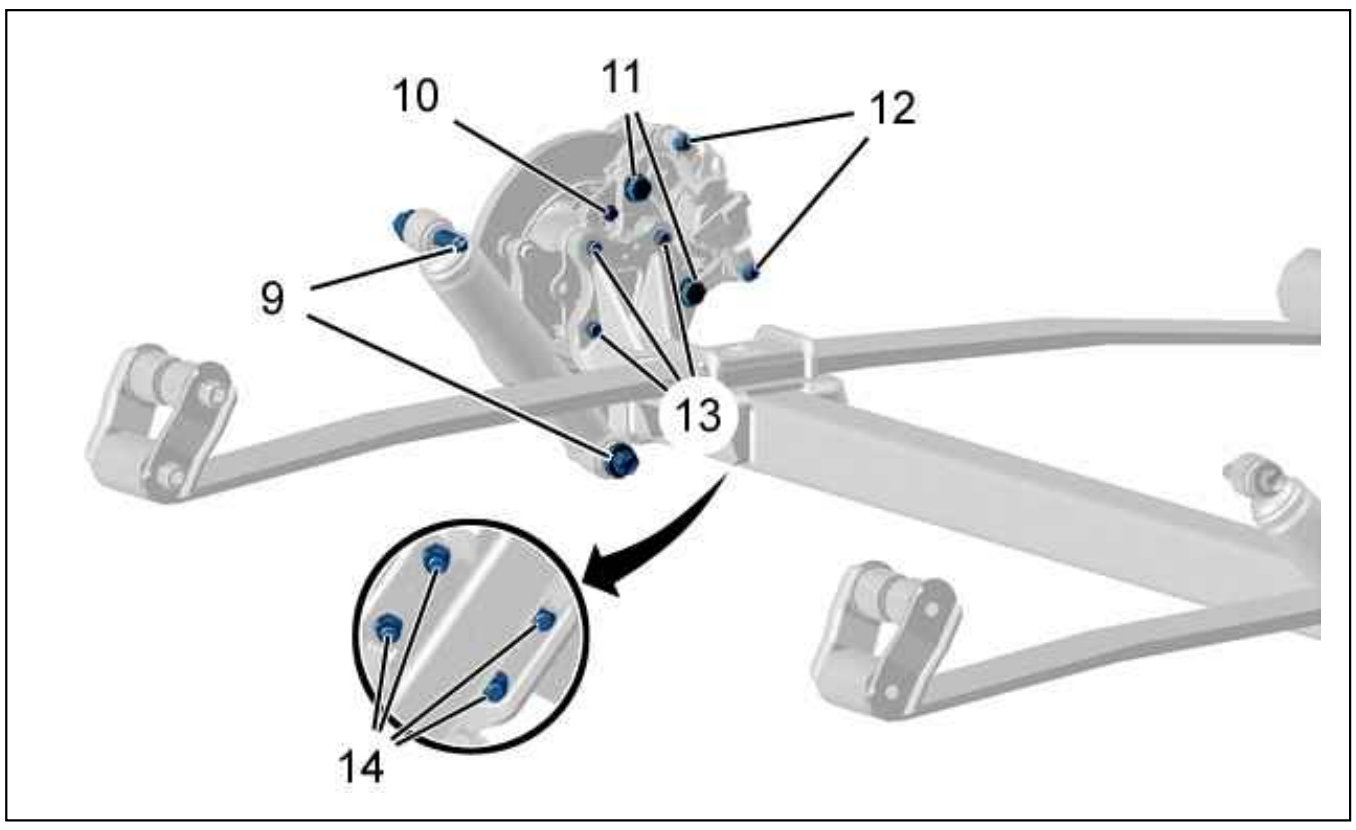

Figure : B3BB04SD

Reference	Designation	Tightening torque
(9)	bolts - Rear damper	14,5 daNm
(10)	bolts - Rear wheel sensor	0,8 daNm
(11)	bolts - Rear brake caliper yoke	16 daNm
(12)	bolts - rear brake caliper	3 daNm
(13)	bolts - Stub axle on crossmember	20 daNm
(14)	nuts - Suspension blade retaining clamp	13 daNm

2.2. With pneumatic suspension

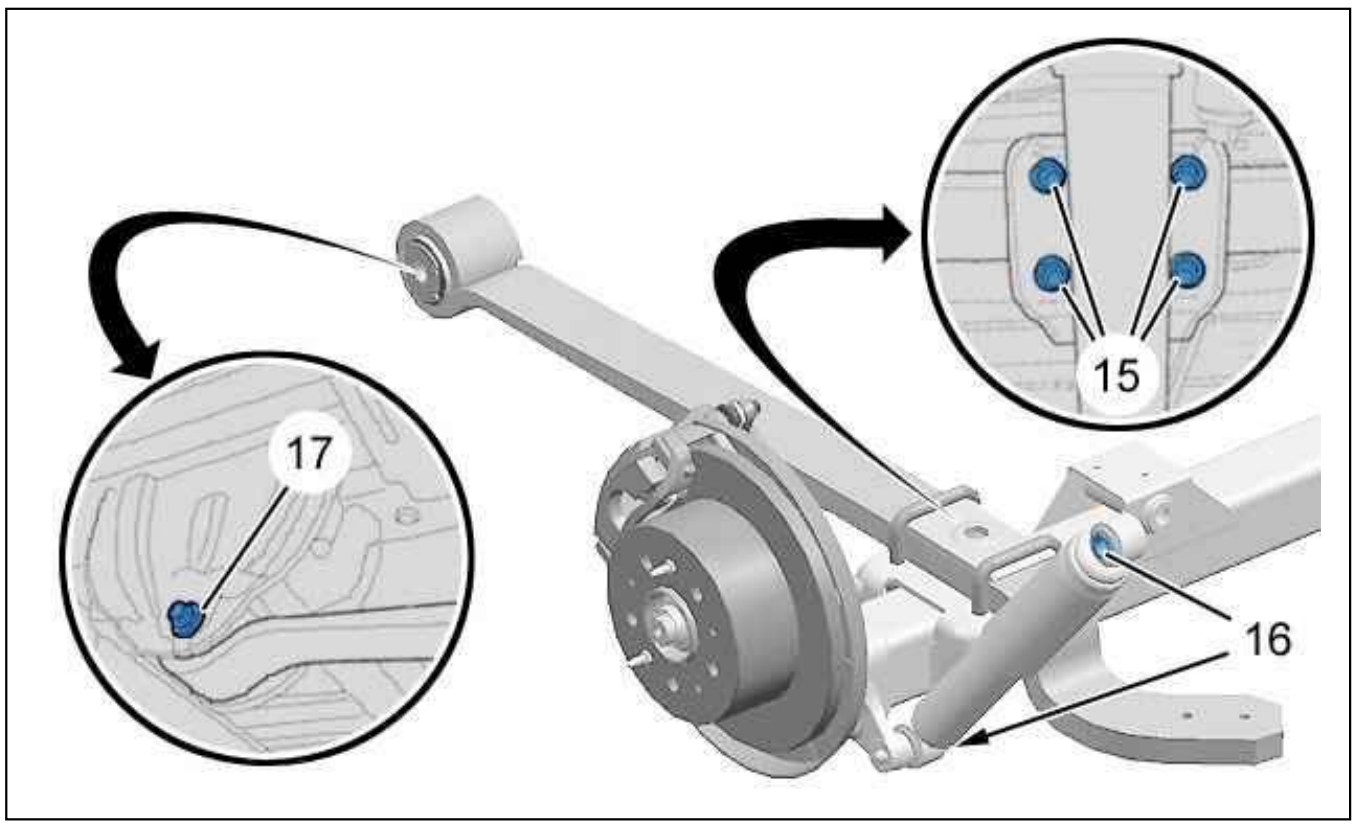

Figure : B3BB04TD

Reference	Designation	Tightening torque
(15)	nuts - Suspension blade retaining clamp	14 daNm
(16)	bolts - Rear damper	14,5 daNm
(17)	bolts - Suspension blade	18,5 daNm

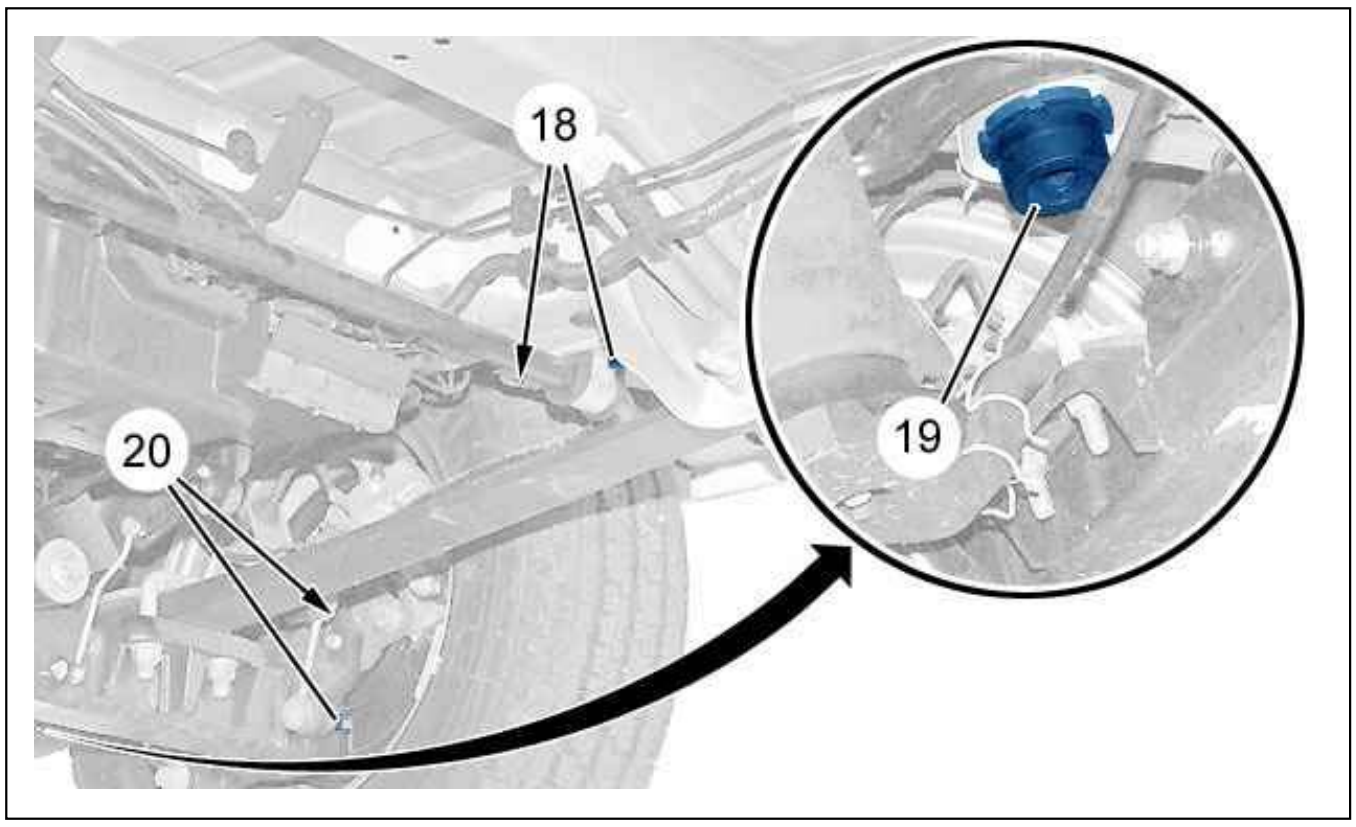

Figure : B3BB04UD

Reference	Designation	Tightening torque
(18)	bolts - Anti-roll bar bearing	4,5 daNm
(19)	Movement stop	3 daNm
(20)	nuts - Anti-roll bar rod	3 daNm

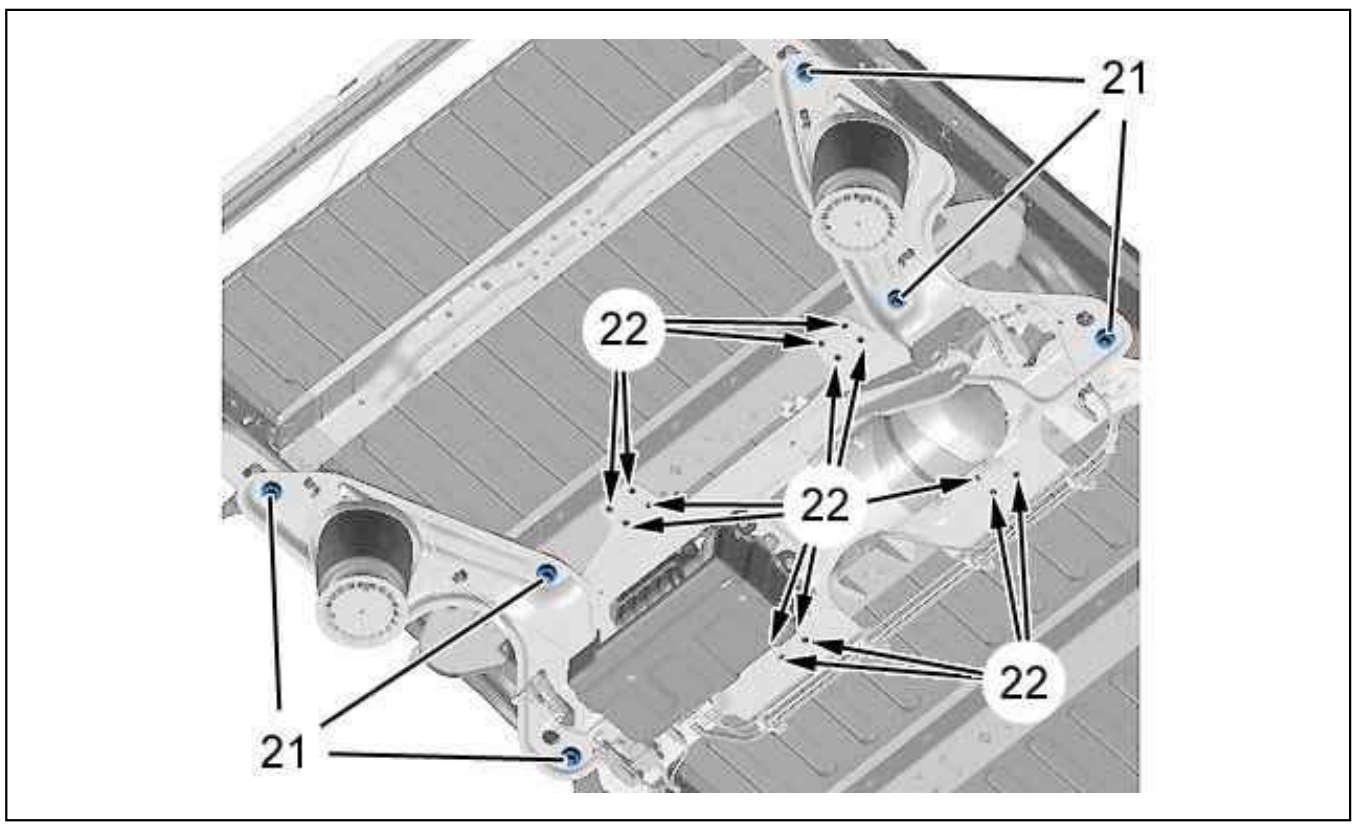

Figure : B3BB04VD

Reference	Designation	Tightening torque
(21)	Fixing on bodyshell : Support plate	18 daNm
(22)	Fixing on bodyshell : Support plate	2,4 daNm

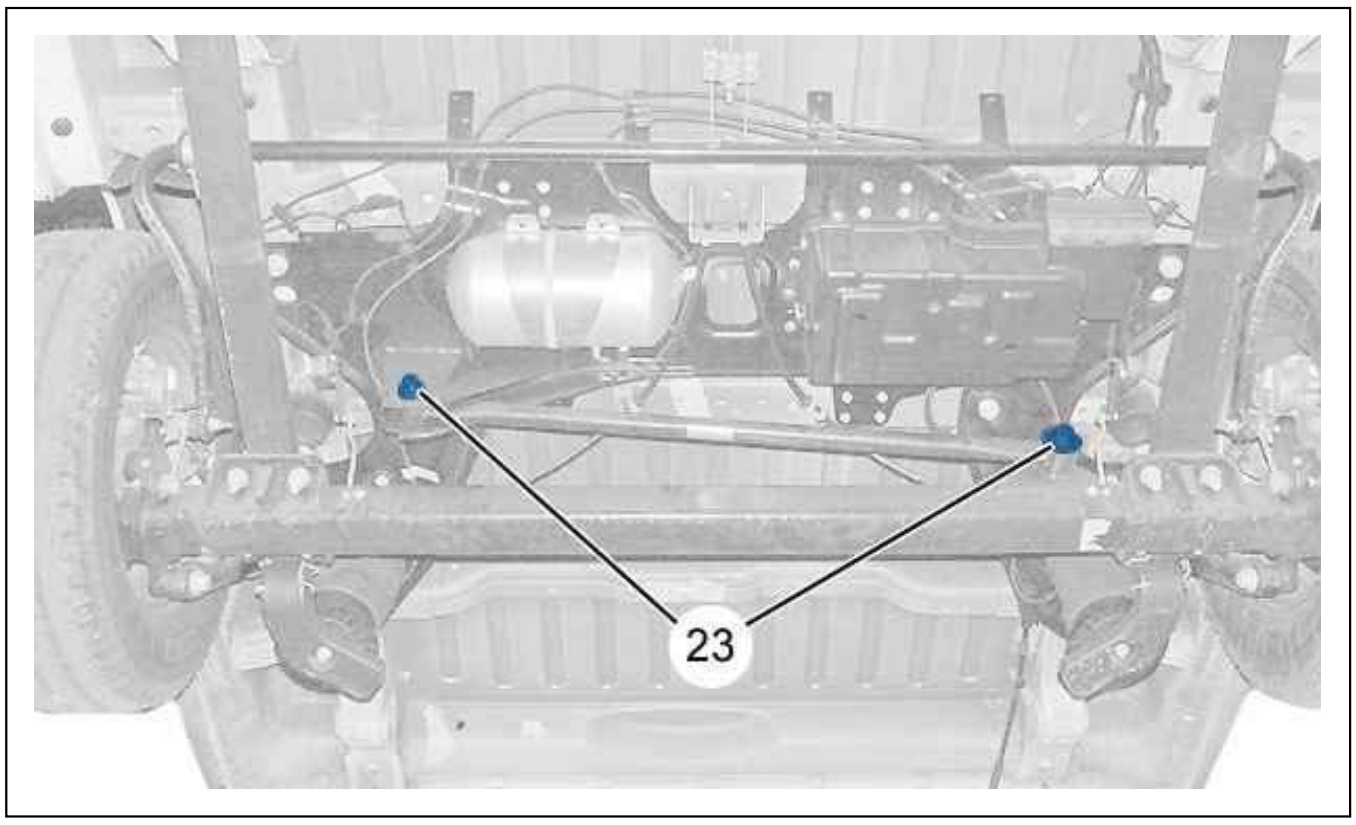

Figure : B3BB04WD

Reference	Designation	Tightening torque
(23)	fixing screws : Rear bar (Panhard)	30 daNm

3. Pneumatic suspension

3.1. Body height sensor

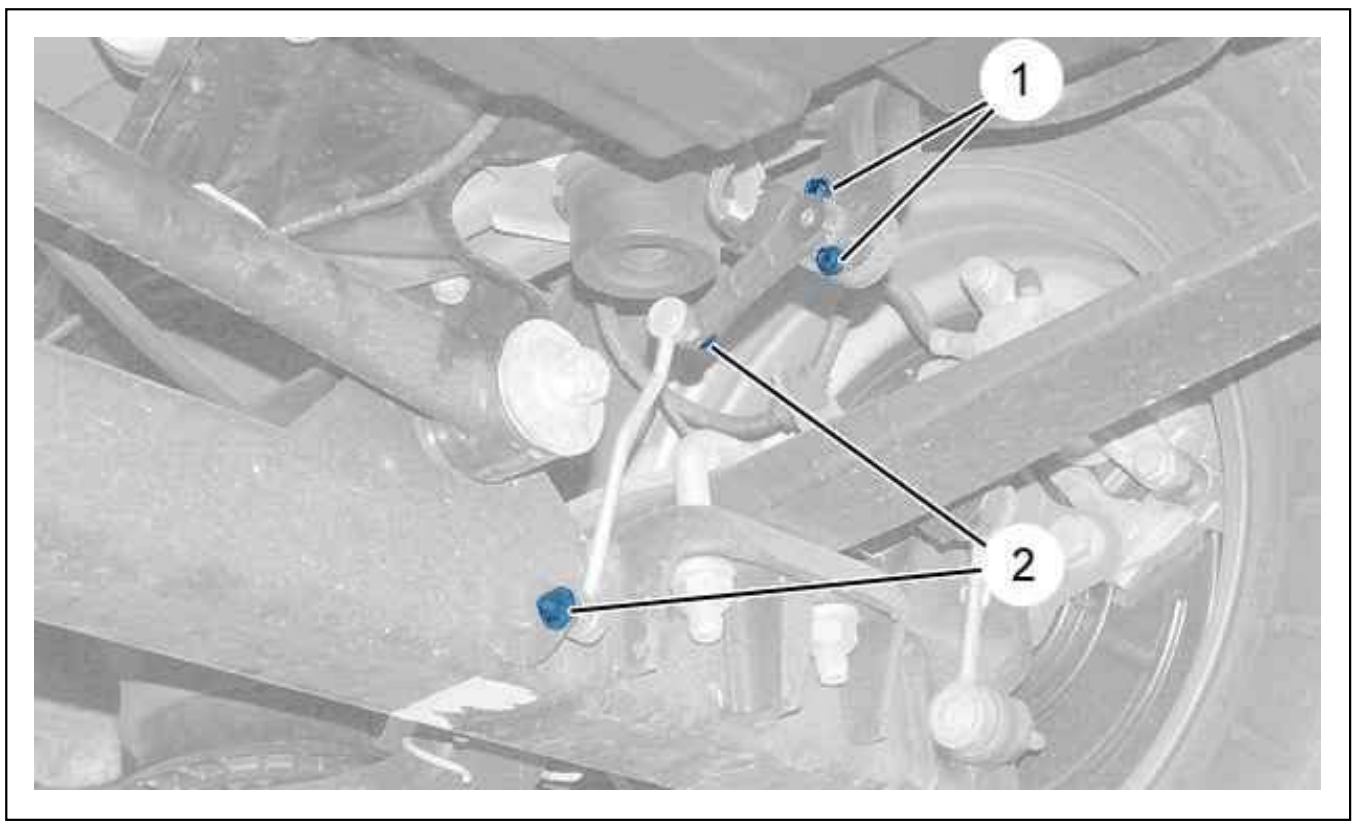

Figure : B3BB04XD

Reference	Designation	Tightening torque
(1)	Fixing bolt on support : Height sensor	0,3 daNm
(2)	fixing screws : Body height sensor rod	0,9 daNm

3.2. Air compressor

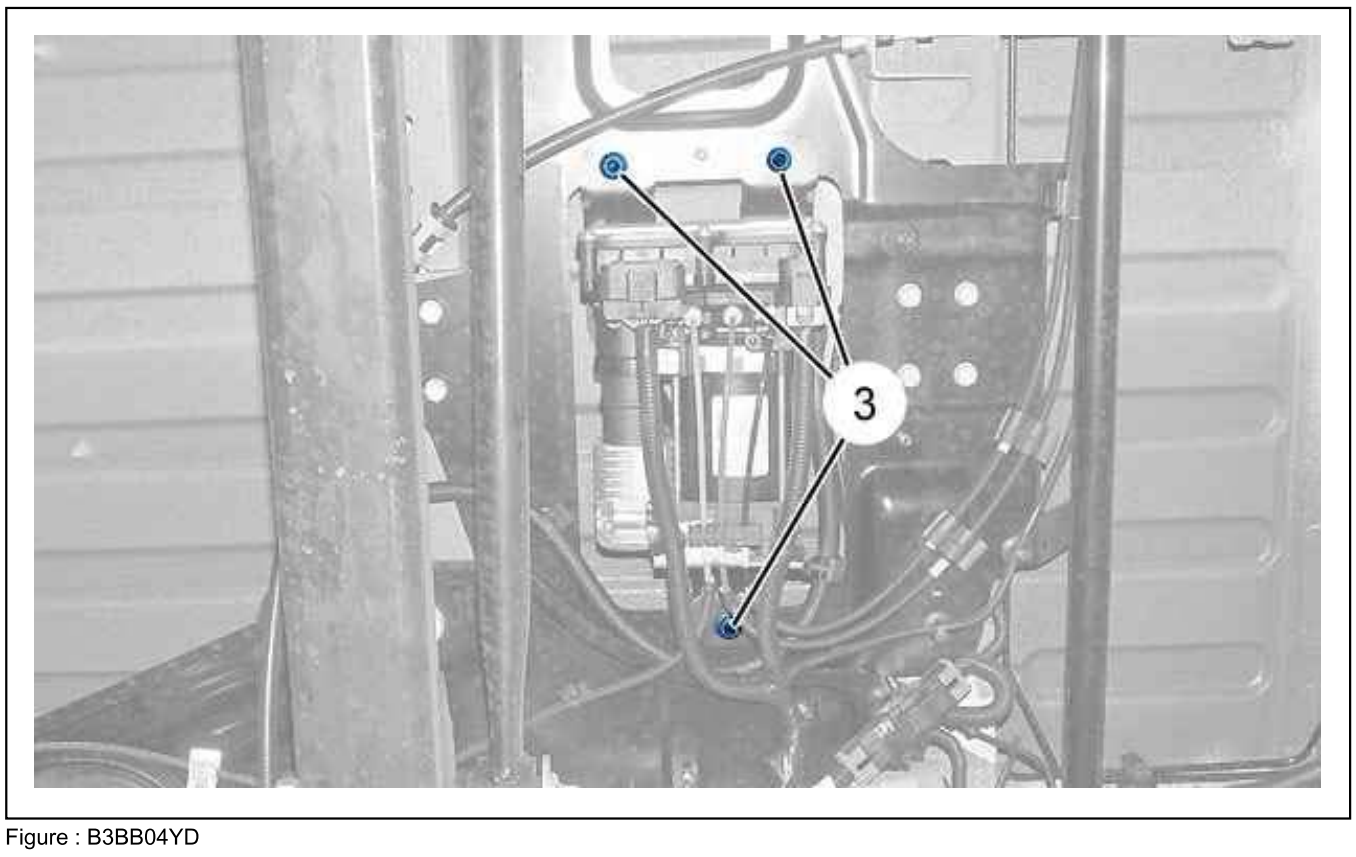

Figure : B3BB04YD

Reference	Designation	Tightening torque
(3)	fixing nuts : Air compressor support	2,4 daNm

3.3. Compressed air reservoir

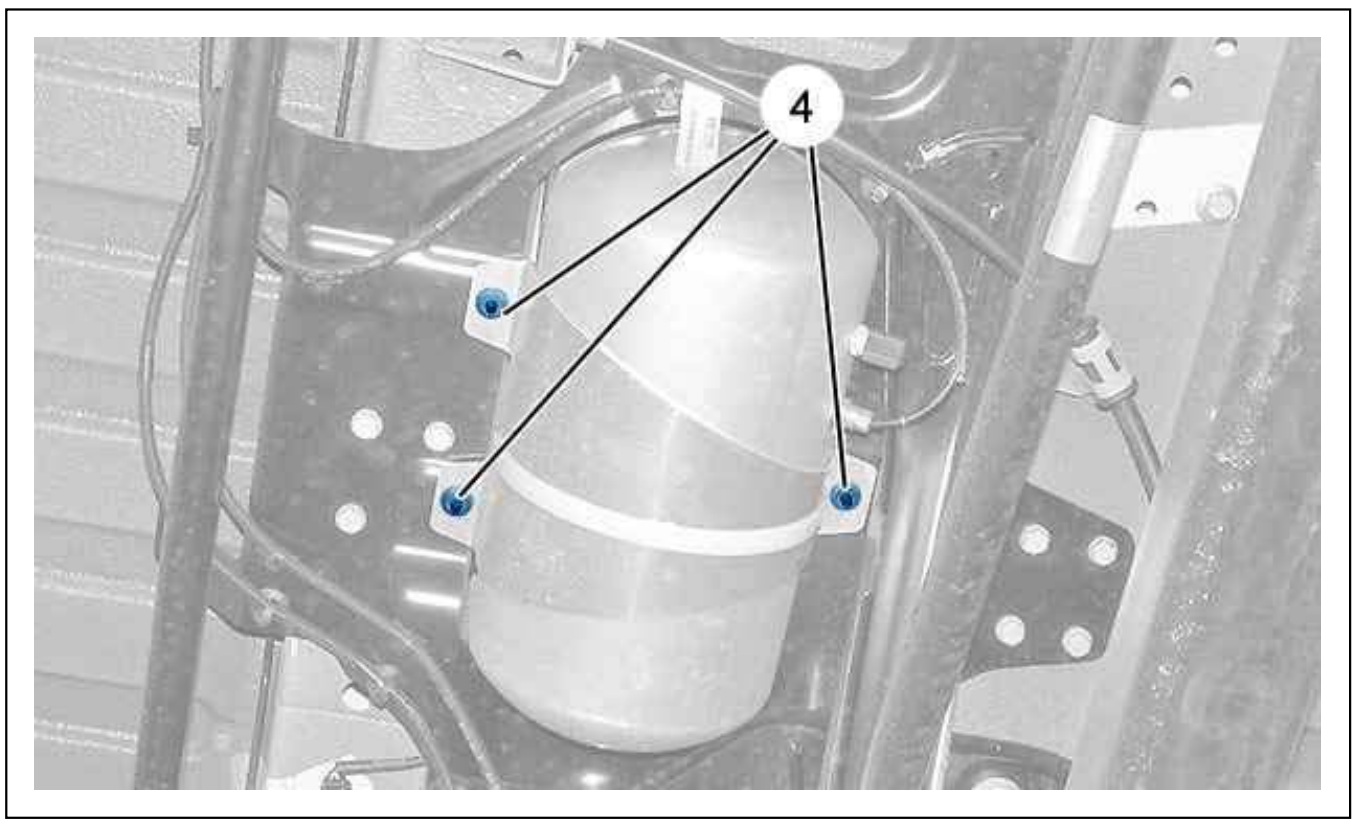

Figure : B3BB04ZD

Reference	Designation	Tightening torque
(4)	Nuts fixing the compressed air reservoir on the body	0,9 daNm

3.4. Pneumatic spring

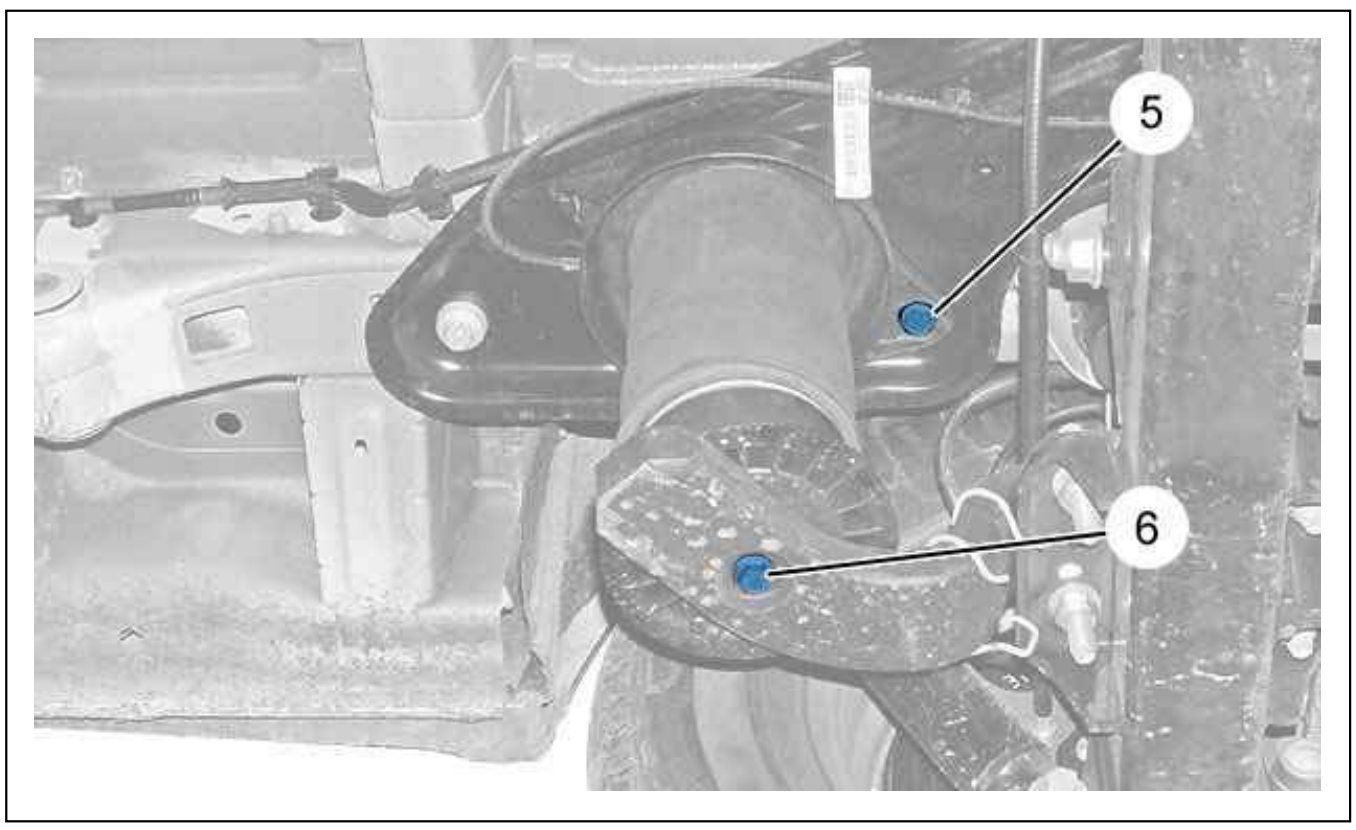

Figure : B3BB050D

Reference	Designation	Tightening torque
(5)	Bolt for fixing on the bodyshell : Pneumatic spring	3,5 daNm
(6)	Bolt for fixing on the suspension blade : Pneumatic spring	3,5 daNm

4. Rear brake backplates

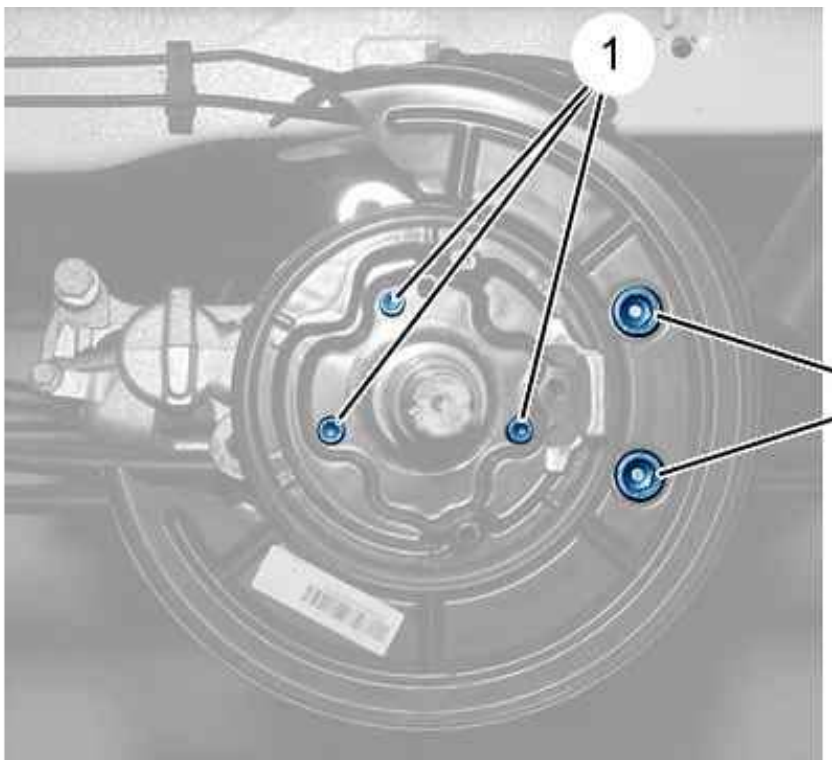

Figure : B3BB051D

Reference	Designation	Tightening torque
(1)	Bolt fixing the handbrake on the rear stub axle	2,5 daNm
(2)	bolts - Handbrake shoes support	20 daNm

CHECKING AND ADJUSTING VALUES : AXLE GEOMETRIES

ESSENTIAL : Observe the safety and cleanliness recommendations .

1. Conditions for checking

Prior conditions for checking and adjusting the axle geometries :

- Correct tyre pressure
- Steering rack set at its zero point
- Vehicle unladen with all levels topped up

N.B. : Place the vehicle on two turntables at the front and two shifting plates at the rear.

2. Front and rear axle geometry

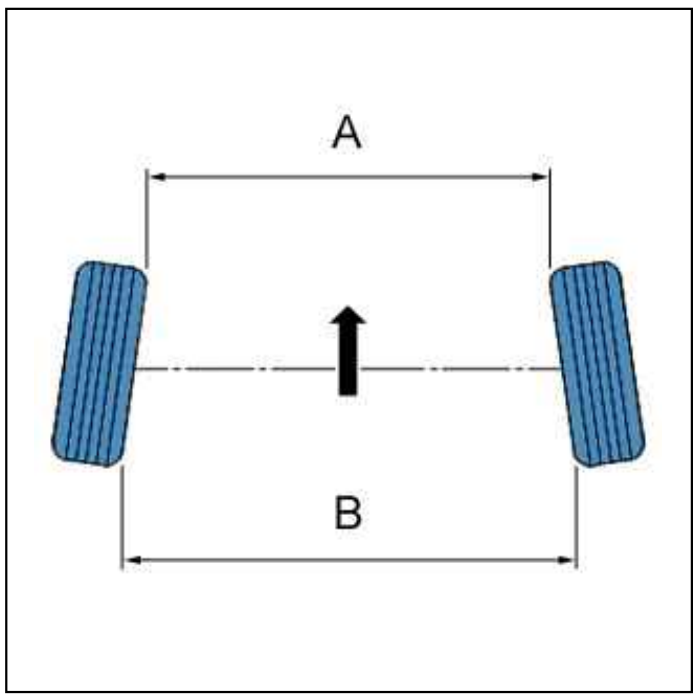

Figure : B3CP02UC

N.B. : Front of the vehicle (following the arrow).

A less than B : Positive figure (+) (toe-in).
A more than B : Negative figure (-) (opening).

2.1. Front suspension

CAUTION : Distribute the global parallelism value symmetrically, left wheel-right wheel.

Tracking (opening)	- 0°09’ ± 0°09’
Castor (not adjustable)	1°45’ ± 30’
Camber (not adjustable)	0° ± 30’
Pivot angle	10°45’ ± 30’

2.2. Rear suspension

Tracking (not adjustable)	0° ± 0°17’
Camber (not adjustable)	-

TECHNICAL NOTE : AXLE GEOMETRIES

CAUTION : To check all the angles (castor, camber, tracking), it is necessary to place the vehicle at reference height.

Distribute the global parallelism value symmetrically, left wheel-right wheel.

N.B. : PC = Worksite pack - VTC = All terrain vehicle - CRD = difficult road conditions - STT = Stop and start.

1. Geometry angles

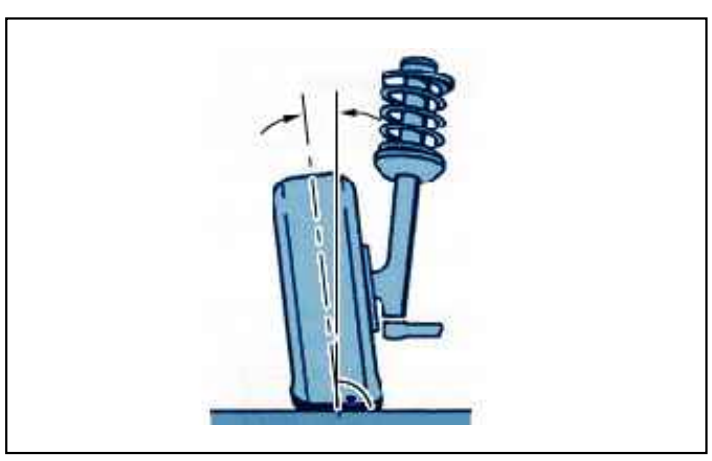

Figure : B3BB03NT

Camber angle : Angle formed by the plane of a wheel and the vertical (Vehicle seen from the front).

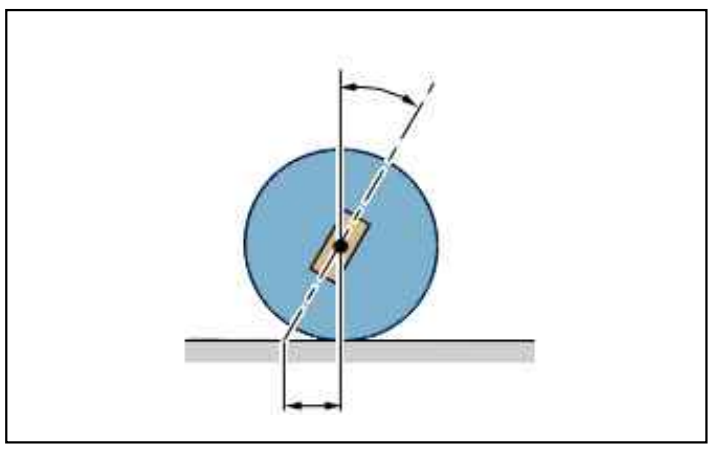

Figure : B3BB03OT

Castor angle : Angle formed by the pivoting axis of the front wheel and the vertical (Vehicle seen from the side).

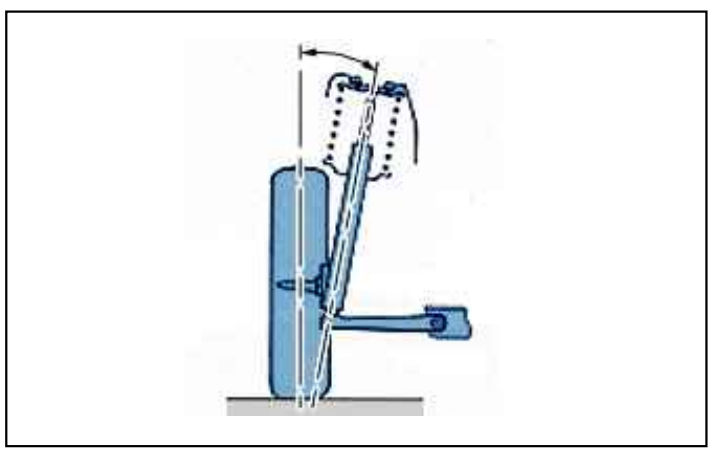

Figure : B3BB03PT

Kingpin angle : Angle formed by the pivoting axis with the vertical, measured in the transverse plane of the vehicle (Vehicle seen from the front).

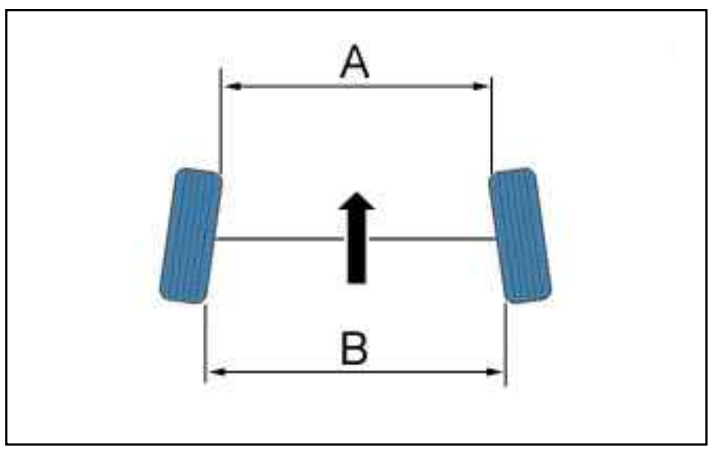

Figure : B3BB03QT

Tracking : Difference between distance A and distance B (Front of the vehicle : In the direction of the arrow).
A < B : Toe-in.
A > B : Opening.

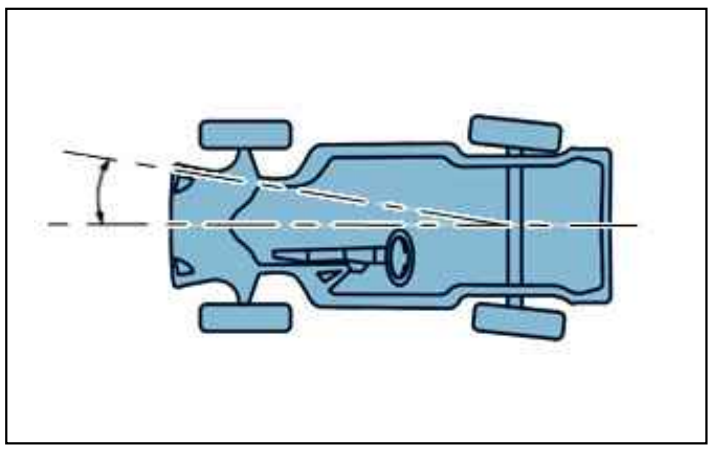

Figure : B3BB03RT

Thrust angle : Angle formed by the thrust axis of the rear axle and the longitudinal axis of the vehicle.

2. C1

2.1. Front suspension

Checking and adjusting values	
Camber (not adjustable)	-0°47' ± 0°45'
Castor (not adjustable)	2°47' ± 0°45'
Pivot angle (not adjustable)	9°33'/"
Tracking	0°07' ± 0°12'
Steering wheel turning angle	38°55' ± 2°
Lower castor dissymmetry at 0°30'Lower camber dissymmetry at 0°30'	

2.2. Rear suspension

Checking and adjusting values	
Camber (not adjustable)	-0°56' ± 0°30'
Tracking (not adjustable)	0°21' ± 0°13'
Lower castor dissymmetry at 0°30'	

3. C-Zero

3.1. Front suspension

Checking and adjusting values	
Camber (not adjustable)	0° ± 0°45'
Castor (not adjustable)	3°30' ± 0°45'
Pivot angle (not adjustable)	15°20' ± 1°30'
Tracking at the axle	0°26' ± 0°26'
Tracking at the wheel	0°13' ± 0°13'
Lower castor dissymmetry at 0°30'Lower camber dissymmetry at 0°30'	

3.2. Rear suspension

Checking and adjusting values	
Camber (not adjustable)	0°00' ± 0°45'
Tracking at the axle	0°26' ± 0°26'
Tracking at the wheel	0°13' ± 0°13'
Lower castor dissymmetry at 0°30'	

4. C3 (A31)

4.1. Front suspension

	Vehicle for Europe	CRD vehicles	
Engines	TU1 - TU3 - DV4TD - ET3 - DV6ATED4 TU5 MA -TU5 MAP	TU5 AL4 - DV6TED4	All
Camber (not adjustable)	-0°28' ± 0° 30'	-0°27' ± 0° 30'	-0°25' ± 0° 30'
Castor (not adjustable)	3°57' ± 0° 18'	3°56' ± 0° 18'	3°53' ± 0° 18'
Pivot angle (not adjustable)	11°24' ± 0° 30'	11°23' ± 0° 30'	11°13' ± 0° 30'
Tracking at the axle	-0°17' ± 0°09'	-0°17' ± 0°09'	-0°17' ± 0°09'
Lower castor dissymmetry at 0°30'Lower camber dissymmetry at 0°18'			

4.2. Rear suspension

	Vehicle for Europe		CRD vehicles
Engines	TU1 - TU3 - DV4TD - ET3 - DV6ATED4	TU5 - DV6TED4	All
Camber (not adjustable)	-1°30' ± 0° 30'		-1°30' ± 0° 30'
Tracking at the axle	0°45' ± 0°09'		0°47' ± 0°09'

Lower castor dissymmetry at 0°18’

5. C3 (A51)

5.1. Front suspension

Vehicle	Europe - CRD	Europe - CRD
engines	all models - Gearboxes MA - BE - MAP	Engine EP6C - DV6C (Gearbox AL4 -MCM)
Camber (not adjustable)	-0°25' ± 0°30'	-0°27' ± 0°30'
Castor (not adjustable)	4°18' ± 0°18'	
Pivot angle (not adjustable)	11°18' ± 0°30'	11°24' ± 0°30'
Tracking at the axle	-0°17' ± 0°09'	
Tracking at the wheel	-0°09' ± 0°04'	
Lower camber dissymmetry at 0°30’Lower castor dissymmetry at 0°30’		

Version "Red Block"		
engines	EP6C - DV6D	DV6C
Camber angle (not adjustable)	-0°31' (± 0°30')	-0°32' (± 0°30')
Castor (not adjustable)	+4°21' (± 0°18')	+4°21' (± 0°18')
Pivot angle (not adjustable)	+11°30' (± 0°30')	+11°30' (± 0°30')
Tracking at the axle (adjustable)	-0°17' (± 0°09')	-0°17' (± 0°09')
Tracking at the wheel (adjustable)	-0°09' (± 0°04')	-0°09' (± 0°04')
Lower camber dissymmetry at 0°30’Lower castor dissymmetry at 0°30’		

Vehicle	CRD raised	Utility
Camber (not adjustable)	-0°22' ± 0°30'	-0°26' ± 0°30'
Castor (not adjustable)	4°12' ± 0°18'	4°18' ± 0°18'
Pivot angle (not adjustable)	11°12' ± 0°30'	11°24' ± 0°30'
Tracking at the axle	-0°17' ± 0°09'	
Tracking at the wheel	-0°09' ± 0°04'	
Lower camber dissymmetry at 0°30’Lower castor dissymmetry at 0°30’		

5.2. Rear suspension

Europe - CDR		
RPO	Up to RPO 13019	From RPO 13020
Camber (not adjustable)	-1°42' ± 0°30'	-1°42' ± 0°30'
Tracking at the axle (not adjustable)	0°43' ± 0°09'	0°41' ± 0°09'
Tracking at the wheel (not adjustable)	0°21' ± 0°04'	0°20' ± 0°04'
Camber dissymmetry ± 0°30'		

Vehicle	Version "Red Block"	CRD raised	Utility
Camber (not adjustable)	-1°42' ± 0°30'	-1°45' ± 0°30'	
Tracking at the axle (not adjustable)	0°45' ± 0°09'	0°39' ± 0°09'	0°49' ± 0°09'
Tracking at the wheel (not adjustable)	0°22' ± 0°04'	0°19' ± 0°04'	0°24' ± 0°04'
Camber dissymmetry ± 0°30'			

6. DS3 (A55)

6.1. Front suspension

engines	EP6C/AL4 (Prior to 05/2011	EP3C, DV4C, EP6C and DV6D	EP6DTS - EP6DT - DV6C - EP6C (From 05/2011)
Camber (not adjustable)	-0°27' ± 0°30'	-0°31' ± 0°30'	-0°32' ± 0°30'
Castor (not adjustable)	4°18' ± 0°18'	4°21' ± 0°18'	
Pivot angle (not adjustable)	11°24' ± 0°30'	11°30' ± 0°30'	
Tracking at the axle	-0°17' ± 0°09'		
Tracking at the wheel	-0°09' ± 0°04'		
Lower camber dissymmetry at 0°30’Lower castor dissymmetry at 0°30’			

6.2. Rear suspension

engines	All types except for EP6C/AL4	EP6C/AL4
Camber (not adjustable)	-1°45' ± 0°30'	-1°42' ± 0°30'
Tracking at the axle (not adjustable)	0°43' ± 0°09'	0°45' ± 0°09'
Tracking at the wheel (not adjustable)	0°21' ± 0°04'	0°23' ± 0°04'
Camber dissymmetry ± 0°30'		

7. C3 PICASSO (A58)

7.1. Front suspension

Version	Europe	CRD
Camber (not adjustable)	-0°30' ± 0°30'	-0°31' ± 0°30'
Castor (not adjustable)	4°38' ± 0°18'	
Pivot angle (not adjustable)	11°26' ± 0°30'	11°27' ± 0°30'
Tracking at the axle	-0°17' ± 0°09'	
Tracking at the wheel	-0°09' ± 0°04'	
Lower camber dissymmetry at 0°30’Lower castor dissymmetry at 0°30’		

7.2. Rear suspension

Checking and adjusting values	
Camber (not adjustable)	-1°42' ± 0°30'
Tracking at the axle (not adjustable)	0°43' ± 0°09'
Tracking at the wheel (not adjustable)	0°21' ± 0°04'
Lower camber dissymmetry at 0°30’	

8. C-ELYSEE

8.1. Front suspension

Checking and adjusting values	
Camber angle (not adjustable)	-0°24' ± 0°30'
Castor (not adjustable)	4°36' ± 0°18'
Pivot angle (not adjustable)	11°18' ± 0°30'
Tracking at the axle (adjustable)	0°17'± 0°09'
Tracking at the wheel (adjustable)	0°09' ± 0°04'
Lower camber dissymmetry at 0°30’Lower castor dissymmetry at 0°30’	

8.2. Rear suspension

Checking and adjusting values	
Camber angle (not adjustable)	-1°42' ± 0°30'
Tracking at the axle (not adjustable)	0°41'± 0°09'
Tracking at the wheel (not adjustable)	0°21' ± 0°04'
Lower camber dissymmetry at 0°30’	

9. C4 (b7) - DS4

9.1. Front suspension

Version	Europe	Utility	CRD vehicles	3+2 (DS4) coupe	STT
Camber : Left-hand wheel (not adjustable)	-0°18' (+0°24' ; -0°36')		-0°12' (+0°36' ; -0°24')		-0°24(+0°36' ; -0°24')
Camber : Right-hand wheel (not adjustable)	-0°18' (+0°24' ; -0°36')		-0°12' (+0°24' ; -0°36')		-0°24(+0°24' ; -0°36')
Castor (not adjustable)	5°12' ± 0°30'	5°42' ± 0°30'	5°06' ± 0°30'	4°54' ± 0°30'	5°12' ± 0°30'
Pivot angle : Left-hand wheel (not adjustable)	13° (+0°24' ; -0°36')		12°42' (+0°24' ; -0°36')		+13°06' (+0°24' ; -0°36')
Pivot angle : Right-hand wheel (not adjustable)	13° (+0°36' ; -0°24')		12°42' (+0°36' ; -0°24')		+13°06' (+0°36' ; -0°24')
Tracking at the axle	-0°21' ± 0°09'				
Tracking at the wheel	-0°11' ± 0°04'				
Camber dissymmetry equal to 0°12' ± 0°28'Castor dissymmetry equal to 0° ± 0°20'Pivot angle dissymmetry equal to -0°12' ± 0°28'					

9.2. Rear suspension

Version	Europe	Commercial vehicle	CRD vehicles	3+2 (DS4) coupe	STT
Camber (not adjustable)	-1°42' ± 0°30'			-1°50' ± 0°30'	-1°42' ± 0°30'
Tracking at the axle (not adjustable)	0°56' ± 0°09'	1°04' ± 0°09'	0°52' ± 0°09'	0°56' ± 0°09'	0°58' ± 0°09'
Thrust angle	0° ± 0°10'				
Camber dissymmetry	0° ± 0°20'				

10. C4 L (B7R)

10.1. Front suspension

Checking and adjusting values	
Camber : Left-hand wheel (not adjustable)	-0°12' (+ 0°36' ; -0°24')
Camber : Right-hand wheel (not adjustable)	-0°12' (+ 0°24' ; -0°36')
Castor (not adjustable)	+5°06' ± 0°30'
Pivot angle : Left-hand wheel (not adjustable)	+12°42' (+ 0°24' ; -0°36')
Pivot angle : Right-hand wheel (not adjustable)	+12°42' (+ 0°36' ; -0°24')
Tracking at the axle (adjustable)	-0°21' ± 0°09'
Tracking at the wheel (adjustable)	-0°11' ± 0°04'
Camber dissymmetry equal to +0°12' ± 28'Castor dissymmetry equal to 0° ± 20'Pivot angle dissymmetry equal to -0°12' ± 28'	

Distribute the global parallelism value symmetrically, left wheel-right wheel.

10.2. Rear suspension

Checking and adjusting values	
Camber (not adjustable)	-1°42' ± 0°30'
Tracking at the axle (not adjustable)	+0°52' ± 0°10'
Tracking at the wheel (not adjustable)	+0°26' ± 0°05'
Thrust angle	0° ± 0°10'
Camber dissymmetry equal to 0°± 20'	

11. C4 PICASSO (B58)

11.1. Front suspension

Metallic suspension	all models(Not STT - CRD vehicles)	STT	CRD
Camber : Left-hand wheel (not adjustable)	0° (+0°40' ; -0°20')		0°04' (+0°40' ; -0°20')
Camber : Right-hand wheel (not adjustable)	0° (+0°20' ; -0°40')		0°04' (+0°20' ; -0°40')
Castor (not adjustable)	4°54' ± 0°30'		4°48' ± 0°30'
Pivot angle : Left-hand wheel (not adjustable)	11°42 (+0°20' ; -0°40')	11°48 (+0°20' ; -0°40')	11°30 (+0°20' ; -0°40')
Pivot angle : Right-hand wheel (not adjustable)	11°42' (+0°40' ; -0°20')	11°48' (+0°40' ; -0°20')	11°30' (+0°40' ; -0°20')
Tracking at the axle	-0°21' ± 0°09'		
Tracking at the wheel	-0°11' ± 0°04'		
Camber dissymmetry equal to 0°20' ± 0°28'Castor dissymmetry equal to 0°± 20'Pivot angle dissymmetry equal to -0°20' ± 28'			

Pneumatic suspension	all models (except CRD)	CRD
Camber : Left-hand wheel (not adjustable)	0° (+0°40' ; -0°20')	0°04' (+0°40' ; -0°20')
Camber : Right-hand wheel (not adjustable)	0° (+0°20' ; -0°40')	0°04' (+0°20' ; -0°40')
Castor (not adjustable)	4°30' ± 0°30'	4°36 ± 0°30'
Pivot angle : Left-hand wheel (not adjustable)	11°42 (+0°20' ; -0°40')	11°30 (+0°20' ; -0°40')
Pivot angle : Right-hand wheel (not adjustable)	11°42' (+0°40' ; -0°20')	11°30' (+0°40' ; -0°20')
Tracking at the axle	-0°21' ± 0°09'	
Tracking at the wheel	-0°11' ± 0°04'	
Camber dissymmetry equal to 0°20' ± 0°28'Castor dissymmetry equal to 0°± 20'Pivot angle dissymmetry equal to -0°20' ± 28'		

11.2. Rear suspension

Version	all models (except CRD)	CRD
Camber (not adjustable)	-1°42' ± 0°30'	-1°41' ± 0°30'
Thrust angle	0° ± 0°06'	
Tracking at the axle (not adjustable)	0°52' ± 0°09'	0°50' ± 0°09'
Tracking at the wheel (not adjustable)	0°26' ± 0°04'	0°25' ± 0°04'
Camber dissymmetry equal to 0° ± 0°20'		

Version	all models (except CRD)
Camber (not adjustable)	-1°40' ± 0°30'
Thrust angle	0° ± 0°06'
Tracking at the axle (not adjustable)	0°44' ± 0°09'
Tracking at the wheel (not adjustable)	0°22' ± 0°04'
Camber dissymmetry equal to 0° ± 0°20'	

12. C4 PICASSO (B78)

12.1. Front suspension

Checking and adjusting values			
-	All engines except DV6D Airdream	DV6D Airdream engine	CRD
Camber (not adjustable)	-0° 18' ± 0° 30'	-0° 24' ± 0° 30'	-0° 12' ± 0° 30'
Castor (not adjustable)	4° 12' ± 0° 30'	4° 18' ± 0° 30'	4° 6' ± 0° 30'
Pivot angle (Non-adjustable)	14° ± 0° 30'	14° 18' ± 0° 30'	13° 48' ± 0° 30'
Tracking at the axle (adjustable)	-0° 17' ± 0° 09'	-0° 17' ± 0° 09'	-0° 17' ± 0° 09'
Tracking at the wheel (adjustable)	-0° 08' ± 0° 04'	-0° 08' ± 0° 04'	-0° 08' ± 0° 04'
Lower camber dissymmetry at 0°20'Lower castor dissymmetry at 0°20'			

12.2. Rear suspension

Checking and adjusting values			
	All engines except DV6D Airdream	DV6D Airdream engine	Entreprise model - All engines except DV6D Airdream
Camber (not adjustable)	-1° 42' ± 0° 30'	-1° 42' ± 0° 30'	-1° 48' ± 0° 30'
Tracking at the axle (not adjustable)	0° 44' ± 0° 09'	0° 48' ± 0° 09'	0° 31' ± 0° 09'
Tracking at the wheel (not adjustable)	0° 22' ± 0° 04'	0° 24' ± 0° 04'	0° 15' ± 0° 04'
Lower camber dissymmetry at 0°30'			

Checking and adjusting values			
	Entreprise model - DV6D Airdream engine	CRD Not : Entreprise model	CRD Not : Entreprise model
Camber (not adjustable)	-1° 42' ± 0° 30'	-1° 36' ± 0° 30'	-1° 42' ± 0° 30'
Tracking at the axle (not adjustable)	0° 35' ± 0° 09'	0° 40' ± 0° 09'	0° 28' ± 0° 09'
Tracking at the wheel (not adjustable)	0° 17' ± 0° 04'	0° 20' ± 0° 04'	0° 14' ± 0° 04'
Lower camber dissymmetry at 0°30’			

13. C4 AIRCROSS

13.1. Front suspension

Checking and adjusting values	
Camber (not adjustable)	0°15' ± 0°30'
Castor (not adjustable)	2°40' ± 0°30'
Pivot angle	13° ± 1°30'
Tracking at the wheel (adjustable)	0°03’ ± 0°05’
Lower camber dissymmetry at 0°30’Lower castor dissymmetry at 0°30’	

13.2. Rear suspension

Checking and adjusting values	
Camber (not adjustable)	- 0°25' ± 0°30'
Tracking at the wheel (adjustable)	0°08’ to 0°15’
Lower camber dissymmetry at 0°30’	

14. DS5

14.1. Front suspension

Checking and adjusting values : Vehicles without hybrid drive train		
Application	all models(Not EP6 CDTX)	EP6 CDTX engine
Camber : Left-hand wheel (not adjustable)	-0°18' (+0°36' ; -0°24')	-0°18' (+0°36' ; -0°24')
Camber : Right-hand wheel (not adjustable)	-0°18' (+ 0°24' ; -0°36')	-0°18' (+ 0°24' ; -0°36')
Castor (not adjustable)	5° ± 0°30'	5°06' ± 0°30'
Pivot angle : Left-hand wheel (not adjustable)	12°54' (+0°24' ; -0°36')	12°54' (+0°24' ; -0°36')
Pivot angle : Right-hand wheel (not adjustable)	12°54'(+0°36' ; -0°24')	12°54'(+0°36' ; -0°24')
Tracking at the axle (adjustable)	-0°13' ± 0°09'	-0°13' ± 0°09'
Tracking at the wheel (adjustable)	-0°07' ± 0°04'	-0°07' ± 0°04'
Camber dissymmetry	0°12' ± 0°28'	0°12' ± 0°28'
Castor dissymmetry	0° ± 0°20'	0° ± 0°20'
Pivot angle dissymmetry	-0°12' ± 0°28'	-0°12' ± 0°28'

Checking and adjusting values : Vehicles with hybrid drive train	
Camber : Left-hand wheel (not adjustable)	- 0°18' (+ 0°36' ; - 0°24')
Camber : Right-hand wheel (not adjustable)	- 0°18' (+ 0°24' ; - 0°36')
Castor (not adjustable)	4°36' ± 0°30'
Pivot angle : Left-hand wheel (not adjustable)	12°54' (+ 0°24' ; - 0°36')
Pivot angle : Right-hand wheel (not adjustable)	12°54'(+ 0°36' ; - 0°24')
Tracking at the axle (adjustable)	- 0°13' ± 0°09'
Tracking at the wheel (adjustable)	- 0°07' ± 0°04'
Camber dissymmetry	0°12' ± 0°28'
Castor dissymmetry	0° ± 0°20'
Pivot angle dissymmetry	- 0°12' ± 0°28'

14.2. Rear suspension

Checking and adjusting values : Vehicles without hybrid drive train		
Application	all models(Not EP6 CDTX)	EP6 CDTX engine
Camber (not adjustable)	-1°42' ± 0°30'	-1°42' ± 0°30'
Tracking at the axle (not adjustable)	0°53' ± 0°09'	0°57' ± 0°09'
Tracking at the wheel (not adjustable)	0°27' ± 0°04'	0°28' ± 0°04'
Thrust angle	0° ± 0°10'	0° ± 0°10'
Camber dissymmetry	0° ± 0°20'	0° ± 0°20'

Checking and adjusting values : Vehicles with hybrid drive train	
Camber (not adjustable)	- 2°22' ± 0°30'
Tracking at the axle (adjustable)	0°43' ± 0°09'
Tracking at the wheel (adjustable)	0°21' ± 0°04'
Thrust angle	0° ± 0°30'
Camber dissymmetry	0° ± 0°30'

15. CITROEN C5 (X7)

15.1. Front suspension

Metallic suspension	Vehicle for Europe	CRD vehicles	CRD vehicles
Tyre dimensions	All	215/60 R16 - 225/60 R16	225/55 R17 - 245/45 R18 - 245/40 R19
Camber (not adjustable)	-0°20' ± 0°30'	-0°11' ± 0°30'	-0°13' ± 0°30'
Castor (not adjustable)	5°30' ± 0°30'		
Pivot angle (not adjustable)	8°12' ± 0°30'	8°00' ± 0°30'	8°02' ± 0°30'
Tracking at the axle	-0°09' ± 0°09'		
Camber dissymmetry +0°50' / 0°24'Castor dissymmetry 0° ± 0°30'Pivot angle dissymmetry 0° ± 0°30'			

Hydraulic suspension	225/60 R16	all models(Not 225/60 R16)
Camber (not adjustable)	-0°16' ± 0°30'	-0°17' ± 0°30'
Castor (not adjustable)	5°30' ± 0°30'	5°30' ± 0°30'
Pivot angle (not adjustable)	8°06' ± 0°30'	
Tracking at the axle	-0°09' ± 0°09'	
Camber dissymmetry +0°50' / 0°24'Castor dissymmetry 0° ± 0°30'Pivot angle dissymmetry 0° ± 0°30'		

15.2. Rear suspension

Metallic suspension	Vehicle for Europe	CRD vehicles
Camber (not adjustable)	-1°56' ± 0°30'	-1°41' ± 0°30'
Thrust angle	0° ± 0°30'	
Tracking at the axle	0°43' ± 0°09'	
Camber dissymmetry 0° ± 0°30'		

Hydraulic suspension	
Camber (not adjustable)	-1°16' ± 0°30'
Thrust angle	0° ± 0°30'
Tracking at the axle	0°34' ± 0°09'
Camber dissymmetry 0° ± 0°30'	

16. C-Crosser

16.1. Front suspension

Checking and adjusting values	
Camber (not adjustable)	0°20' ± 0°30
Castor (not adjustable)	2°35' ± 0°30'
Pivot angle	12°45 ± 1°30'
Tracking at the wheel	0°02' ± 0°04'
Lower camber dissymmetry at 0°30’Lower castor dissymmetry at 0°30’	

16.2. Rear suspension

Checking and adjusting values	
Camber (not adjustable)	0°25' ± 0°30'
Tracking at the wheel	0°02' à 0°12'
Lower camber dissymmetry at 0°30’	

17. C6

17.1. Front suspension

Checking and adjusting values	
Tracking at the axle	0°09' ± 0°09'
Camber (not adjustable)	-0°24' ± 0°30'
Castor (not adjustable)	5°30' ± 0°30'
Pivot angle (not adjustable)	8°07' ± 0°30'
Castor dissymmetry ± 0°30'Camber left-right dissymmetry : 0° (-0°24' ; +0°42')Pivot angle dissymmetry ± 0°30'	

17.2. Rear suspension

Checking and adjusting values	
Tracking at the axle	0°34' ± 0°09'
Camber (not adjustable)	-1°27' ± 0°30'
Thrust angle (not adjustable)	0° ± 0°30'
Camber dissymmetry ± 0°30'	

18. C8

18.1. Front suspension

Checking and adjusting values	
Tracking at the axle	0°17' ± 0°09'
Camber (not adjustable)	0° ± 0°30'
Castor (not adjustable)	3°30' ± 0°30'
Pivot angle (not adjustable)	12°24' ± 0°30'

18.2. Rear suspension

Checking and adjusting values		
engines	EW - DW up to RPO 9789 - ES9 up to RPO 9927	EW - DW from RPO 9790 - ES9 from RPO 9928
Tracking at the axle	0°43' ± 0°09'	0°29' ± 0°09'
Camber (not adjustable)	-1° ± 0°30'	-1°30' ± 0°30'

19. NEMO

19.1. Front suspension

Tyre size	175/70 R14	185/65 R15	175/70 R14	185/65 R15
Fuel level	Tank full		5 litres (maximum of	
Camber (not adjustable)	-0°10' ± 0°20'	-0°04' ± 0°20'	-0°08' ± 0°20'	-0°02' ± 0°20'
Castor (not adjustable)	2°38' ± 0°30'	2°40' ± 0°30'	2°44' ± 0°30'	2°46' ± 0°30'
Pivot angle (not adjustable)	13 °			
Tracking at the axle	-0 °09' ± 0°09'			

19.2. Rear suspension

Tyre size	175/70 R14	185/65 R15	175/70 R14	185/65 R15
Fuel level	Tank full		5 litres (maximum of	
Camber (not adjustable)	-0 °32' ± 0°20'	-0 °31' ± 0°20'	-0 °31' ± 0°20'	-0 °30' ± 0°20'
Tracking at the axle	0°08' ± 0°09'		0°07' ± 0°09'	

20. BERLINGO (M59)

20.1. Front suspension

car(Not : Rear leaf suspension)	With suspension 800 kg	Without suspension 800 kg (Michelin Energy E3A)	Without suspension 800 kg (Not Michelin Energy E3A)
Tracking	-'0º17' ± 0º09'		0º09' ± 0º09'
Camber	0º ± 0°30'		
Castor	3º ± 0°30'		
Pivot angle	10º54' ± 0°30'	10º44' ± 0°30'	
Lower castor dissymmetry at 0°18'Lower camber dissymmetry at 0°39'			

car(Not : Rear leaf suspension)	With suspension 800 kg	Without suspension 800 kg	All types except for Michelin Energy E3A	Michelin Energy E3A
Version	raised CRD		VTC	
Tracking	-0º17' ± 0º09'			0º09' ± 0º09'
Camber	0º ± 0º30'			
Castor	2º58' ± 0º30'	2º55' ± 0º30'		
Pivot angle	10º38' ± 0º30'	10º26' ± 0º30'		
Lower castor dissymmetry at 0°18'Lower camber dissymmetry at 0°39'				

Van (Not : Rear leaf suspension)	Platform or cab	Raised or CRD	Electrical
Tracking	-0º17' ± 0º09'		
Camber	0º ± 0°30'		
Castor	3° ± 0°30'		
Pivot angle	10º54' ± 0°30'	10º38' ± 0°30'	10º30' ± 0°30'
Lower castor dissymmetry at 0°18'Lower camber dissymmetry at 0°39'			

Rear leaf suspension (Except raised or CRD)	car	Van	car	Van
engines	TU5, DV6A and DV6B		DW8	
Camber	- 0º01' ± 0º30'	- 0º04' ± 0º30'	- 0º05' ± 0º30'	
Castor	3° ± 0°30'	3°03' ± 0°18'	3°05' ± 0°18'	
Pivot angle	10º42' ± 0º30'	10º48' ± 0º30'	10º12' ± 0º30'	10º54' ± 0º30'
Tracking at the axle	- 0°17' ± 0°09'	- 0°09' ± 0°09'	- 0°17' ± 0°09'	
Tracking at the wheel	- 0°09' ± 0°04'	- 0°04' ± 0°04'	- 0°09' ± 0°04'	
Lower castor dissymmetry at 0°18'Lower camber dissymmetry at 0°39'				

car: Rear leaf suspension (Raised or CRD)	TU5, DV6A and DV6B engines	DW8 engine
Camber (not adjustable)	0°08' ± 0°30'	0°02' ± 0°30'
Castor (not adjustable)	2°57' ± 0°18'	3° ± 0°18'
Pivot angle (not adjustable)	10º24' ± 0º30'	10º36' ± 0º30'
Tracking at the axle	-0°17' ± 0°09'	0°17' ± 0°09'

Tracking at the wheel	- 0°09' ± 0°04'
Lower castor dissymmetry at 0°18'Lower camber dissymmetry at 0°39'	

Utility version : Rear leaf suspension (Raised or CRD)	TU5 engines - DV6B	DV6A engine	DW8 engine
Camber (not adjustable)	0º12' ± 0º30'	0º08' ± 0º30'	0º05' ± 0º30'
Castor (not adjustable)	2°56' ± 0°18'	2°57' ± 0°18'	2°59' ± 0°18'
Pivot angle (not adjustable)	10º18' ± 0º30'	10º24' ± 0º30'	10º30' ± 0º30'
Tracking at the axle	-0°17' ± 0°09'		-0°09' ± 0°09'
Tracking at the wheel	-0°09' ± 0°04'		-0°04' ± 0°04'
Lower castor dissymmetry at 0°18'Lower camber dissymmetry at 0°39'			

20.2. Rear suspension

car(Not : Rear leaf suspension)	Without suspension 800 kg	With suspension 800 kg	Without suspension 800 kg	With suspension 800 kg	all models
Version	all models(Without height adjuster, CRD and VTC)		Raised or CRD		VTC
Tracking	0º13' ± 0º11	0º42' ± 0º11	0º33' ± 0º11	0º04' ± 0º11	0º04' ± 0º11
Camber	-1º16 ± 0°30'	-1º13 ± 0°30'	-1º14 ± 0°30'	-1º16 ± 0°30'	
Lower camber dissymmetry at 0°30'					

Van (Not : Rear leaf suspension)	Electrical	Raised or CRD	Platform or cab
Tracking	0º29' ± 0º11	0º33' ± 0º11	0º42' ± 0º11
Camber	-1º14 ± 0°30'		-1º13 ± 0°30'
Lower camber dissymmetry at 0°30'			

Vehicles with rear leaf suspension	all models
Camber (not adjustable)	-1º15 ± 0°30'
Tracking at the axle (not adjustable)	0° ± 0°11
Tracking at the wheel (not adjustable)	0° ± 0°05
Camber dissymmetry 0°± 0°25'	

21. BERLINGO (B9)

21.1. Front suspension

car	All types except finishes : XTR - VTC - CRD vehicles - PC - Stop and start	Finishing : XTR - VTC - CRD vehicles - PC	STT
Camber : Left-hand wheel (not adjustable)	0°01' (+0°40' ; -0°20')	0°03' (+0°40' ; -0°20')	0° (+0°40' ; -0°20'
Camber : Right-hand wheel (not adjustable)	0°01' (+0°20' ; -0°40')	0°03' (+0°20' ; -0°40')	0° (+0°20' ; -0°40'
Castor (not adjustable)	4°54' ± 0°30'	4°42' ± 0°30'	4°54' ± 0°30'
Pivot angle : Left-hand wheel (not adjustable)	11°42' (+0°20' ; -0°40')	11°30' (+0°20' ; -0°40')	11°48' (+0°20' ; -0°40')
Pivot angle : Right-hand wheel (not adjustable)	11°42' (+0°40' ; -0°20')	11°30' (+0°40' ; -0°20')	11°48' (+0°40' ; -0°20')
Tracking at the axle	- 0°13' ± 0°09'		
Tracking at the wheel	- 0°06 ± 0°04'		
Camber dissymmetry equal to 0°20' ± 0°28'Castor dissymmetry equal to 0° ± 0°20'Pivot angle dissymmetry equal to - 0°20' ± 0°28'			

Van	all models (except STT)	STT	Electrical
Camber : Left-hand wheel (not adjustable)	0°01' (+0°40' ; -0°20')	0° (+0°40' ; -0°20')	+0°03' (+0°40' ; -0°20')
Camber : Right-hand wheel (not adjustable)	0°01' (+0°20' ; -0°40')	0° (+0°20' ; -0°40')	+0°03' (+0°20' ; -0°40')
Castor (not adjustable)	5°12' ± 0°30'	4°54' ± 0°30'	+4°54' (± 0°30')
Pivot angle : Left-hand wheel (not adjustable)	11°42' (+0°20' ; -0°40')	11°48' (+0°20' ; -0°40')	+11°30' (+0°20' ; -0°40')
Pivot angle : Right-hand wheel (not adjustable)	11°42' (+0°40' ; -0°20')	11°48' (+0°40' ; -0°20')	+11°30' (+0°40' ; -0°20')
Tracking at the axle	- 0°13' ± 0°09'		
Tracking at the wheel	- 0°06 ± 0°04'		
Camber dissymmetry equal to 0°20' ± 0°28'Castor dissymmetry equal to 0° ± 0°20'Pivot angle dissymmetry equal to - 0°20' ± 0°28'			

21.2. Rear suspension

car	All types except finishes : XTR - VTC - CRD vehicles - PC - Stop and start	Finishing : XTR - VTC - CRD vehicles - PC	STT
Camber (not adjustable)	- 1°42' ± 0°30'	- 1°44' ± 0°30'	- 1°46' ± 0°30'
Thrust angle	0° ± 0°10		
Tracking at the axle (not adjustable)	0°52' ± 0°09'	0°48' ± 0°09'	0°53' ± 0°09
Tracking at the wheel (not adjustable)	0°26' ± 0°04'	0°24' ± 0°04'	0°27' ± 0°04
Camber dissymmetry equal to 0° ± 0°20'			

Van	all models (except STT)	STT	Electrical
Camber (not adjustable)	- 1°44' ± 0°30'	- 1°43' ± 0°30'	-1°41' ± 0°30'
Thrust angle	0° ± 0°10	0° ± 0°10	0° ± 0°10

Tracking at the axle (not adjustable)	0°55' ± 0°09'	0°57' ± 0°09'	0°50' ± 0°09'
Tracking at the wheel (not adjustable)	0°28' ± 0°04'	0°28' ± 0°04'	0°25' ± 0°04'
Camber dissymmetry equal to 0° ± 0°20'			

22. DISPATCH 3

22.1. Front suspension

Combi vehicle	Metallic suspension	Pneumatic suspension	Metallic suspension	Pneumatic suspension
Version	Short		Long	
Camber (not adjustable)	0° ± 0°30			
Castor (not adjustable)	3°34' ± 0°30'	3°41' ± 0°30'	3°39' ± 0°30'	3°46' ± 0°30'
Pivot angle (not adjustable)	12°08 ± 0°30			
Tracking at the axle	- 0°09' ± 0°09'		0°17' ± 0°09'	
Tracking at the wheel	- 0°04' ± 0°04'		0°09' ± 0°04'	
Lower camber dissymmetry at 0°18'Lower pivot angle dissymmetry at 0 ° 24 '				

Van	Metallic suspension	Pneumatic suspension	Metallic suspension	Pneumatic suspension
Version	Short		Long	
Camber (not adjustable)	0°05 ± 0°30			
Castor (not adjustable)	4°15' ± 0°30'	3°39' ± 0°30'	4°18' ± 0°30'	3°43' ± 0°30'
Pivot angle (not adjustable)	12°15 ± 0°30			
Tracking at the axle	- 0°17' ± 0°09'			
Tracking at the wheel	- 0°09' ± 0°09'			
Lower camber dissymmetry at 0°18'Lower pivot angle dissymmetry at 0 ° 24 '				

22.2. Rear suspension

Combi vehicle	Metallic suspension	Pneumatic suspension	Metallic suspension	Pneumatic suspension
Version	Short		Long	
Camber (not adjustable)	-1°42 ± 0°30			
Tracking at the axle (not adjustable)	0°38' ± 0°09'	0°40' ± 0°09'	0°39' ± 0°09'	0°40' ± 0°09'
Tracking at the wheel (not adjustable)	0°19' ± 0°04'			0°20' ± 0°04'
Lower camber dissymmetry at 0°18'				

Van	Metallic suspension	Pneumatic suspension	Metallic suspension	Pneumatic suspension
Version	Short		Long	
Camber (not adjustable)	- 1°48' ± 0°30'	- 1°42' ± 0°30'	- 1°48' ± 0°30'	- 1°42' ± 0°30'
Tracking at the axle (not adjustable)	0°47' ± 0°09'	0°40' ± 0°09'	0°50' ± 0°09'	0°40' ± 0°09'
Tracking at the wheel (not adjustable)	0°24' ± 0°04'	0°19' ± 0°04'	0°25' ± 0°04'	0°20' ± 0°04'
Lower camber dissymmetry at 0°18'				

23. RELAY

23.1. Front suspension

Checking and adjusting values	
Tracking	- 0°09' ± 0°09'
Castor (not adjustable)	1°45' ± 0°30'
Camber (not adjustable)	0° ± 0°30'
Pivot angle	10°45' ± 0°30'

23.2. Rear suspension

Checking and adjusting values	
Tracking (not adjustable)	0° ± 0°17
Camber (not adjustable)	-

TECHNICAL NOTE : AXLE GEOMETRIES

CAUTION : To check all the angles (castor, camber, tracking), it is necessary to place the vehicle at reference height.

Distribute the global parallelism value symmetrically, left wheel-right wheel.

N.B. : PC = Worksite pack - VTC = All terrain vehicle - CRD = difficult road conditions - STT = Stop and start.

1. Geometry angles

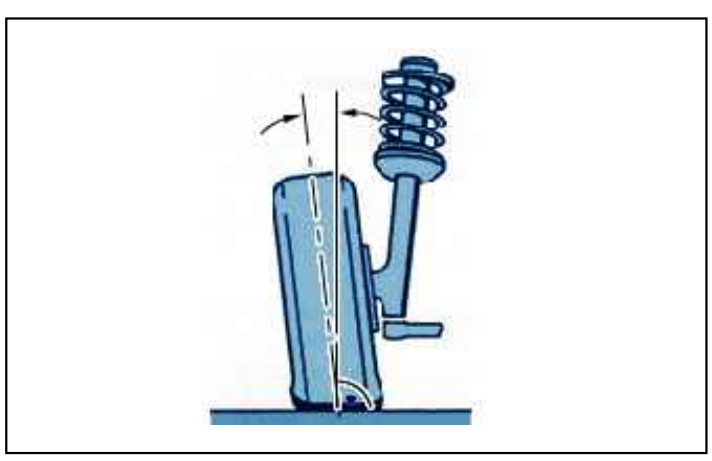

Figure : B3BB03NT

Camber angle : Angle formed by the plane of a wheel and the vertical (Vehicle seen from the front).

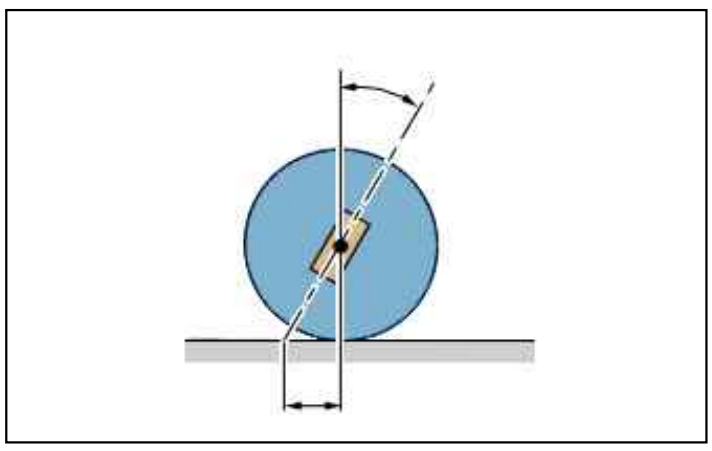

Figure : B3BB03OT

Castor angle : Angle formed by the pivoting axis of the front wheel and the vertical (Vehicle seen from the side).

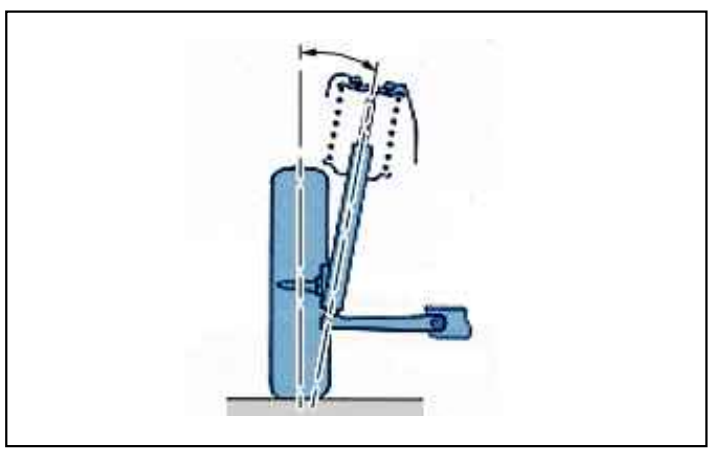

Figure : B3BB03PT

Kingpin angle : Angle formed by the pivoting axis with the vertical, measured in the transverse plane of the vehicle (Vehicle seen from the front).

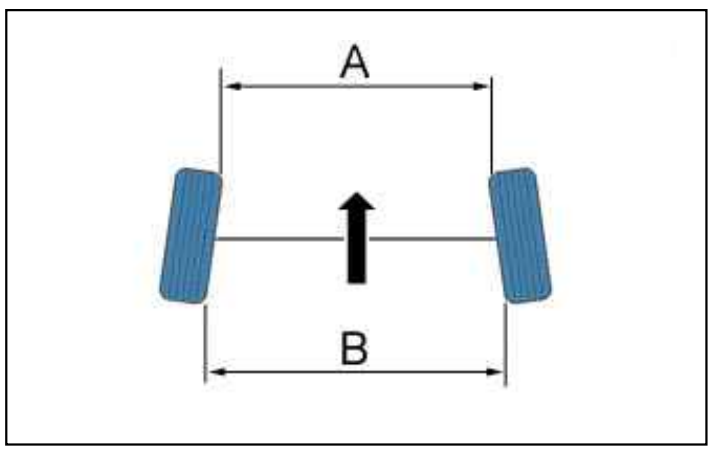

Figure : B3BB03QT

Tracking : Difference between distance A and distance B (Front of the vehicle : In the direction of the arrow).
A < B : Toe-in.
A > B : Opening.

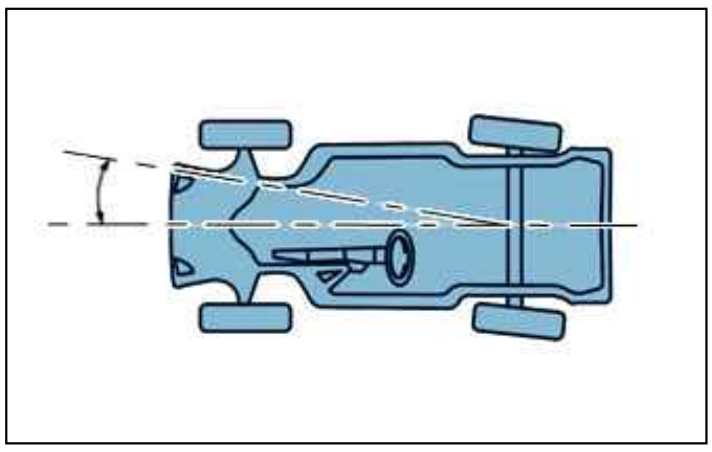

Figure : B3BB03RT

Thrust angle : Angle formed by the thrust axis of the rear axle and the longitudinal axis of the vehicle.

2. 107

2.1. Front suspension

Checking and adjusting values	
Camber (not adjustable)	-0°47' ± 0°45'
Castor (not adjustable)	2°47' ± 0°45'
Pivot angle (not adjustable)	9°33'
Tracking	0°07' ± 0°12'
Steering wheel turning angle	38°55' ± 2°
Lower castor dissymmetry at 0°30’Lower camber dissymmetry at 0°30’	

2.2. Rear suspension

Checking and adjusting values	
Camber (not adjustable)	-0°56' ± 0°30'
Tracking (not adjustable)	0°21' ± 0°13'
Lower camber dissymmetry at 0°30’	

3. ION

3.1. Front suspension

Checking and adjusting values	
Camber (not adjustable)	0 ± 0°45'
Castor (not adjustable)	3°30' ± 0°45'
Pivot angle (not adjustable)	15°20' ± 1°30'
Tracking at the axle	0°26' ± 0°26'
Tracking at the wheel	0°13' ± 0°13'
Lower castor dissymmetry at 0°30’Lower camber dissymmetry at 0°30’	

3.2. Rear suspension

Checking and adjusting values	
Camber (not adjustable)	0°00' ± 0°45'
Tracking at the axle	0°26' ± 0°26'
Tracking at the wheel	0°13' ± 0°13'
Lower camber dissymmetry at 0°30’	

4. 206+ (T3 Europe)

4.1. Front suspension

Version	All types except for CRD	CRD vehicles
Camber (not adjustable)	0° ± 0°30'	
Castor (not adjustable)	3° ± 0°30'	2°54' ± 0°30'
Pivot angle (not adjustable)	9°42' ± 0°30'	9°12' ± 0°30'
Tracking at the axle	0° ± 0°09'	-0°13' ± 0°09'
Tracking at the wheel	0° ± 0°04'	-0°06' ± 0°04'
Lower camber dissymmetry at 0°20’Lower castor dissymmetry at 0°20’Lower pivot angle dissymmetry at 0 ° 20 ’		

4.2. Rear suspension

Version	All types except for CRD	CRD vehicles	Utility vehicle
Thrust angle	0° ± 0°06'		
Camber (not adjustable)	-1° ± 0°30'		
Tracking at the axle (not adjustable)	0°29' ± 0°09'	0°17' ± 0°09'	0°36' ± 0°09'
Tracking at the wheel (not adjustable)	0°15' ± 0°04'	0°08' ± 0°04'	0°18' ± 0°04'

Lower camber dissymmetry at 0°20’

5. 207 (A7)

5.1. Front suspension

	Vehicle for Europe		CRD vehicles	
engines	Type TU3, EP3, DV4, ET3	Type DV6, EP6, TU5	Type TU3, EP3, ET3	Type DV4, DV6, EP6, TU5
Camber (not adjustable)	-0°31' ± 0°30'	-0°33' ± 0°30'	-0°29' ± 0°30'	-0°31' ± 0°30'
Castor (not adjustable)	4°38' ± 0°18'	4°39' ± 0°18'	4°34' ± 0°18'	
Pivot angle (not adjustable)	11°26' ± 0°30'	11°28' ± 0°30'	11°16' ± 0°30'	11°17' ± 0°30'
Tracking at the axle	0°17' ± 0°09'			
Tracking at the wheel	0°09' ± 0°04'			
Lower camber dissymmetry at 0°30’Lower castor dissymmetry at 0°30’				

Vehicle type	Van		Estate vehicle OUTDOOR
engines	TU3, DV4 and ET3	DV6	all models
Camber (not adjustable)	-0°31' ± 0°30'	-0°33' ± 0°30'	-0°31' ± 0°30'
Castor (not adjustable)	4°38' ± 0°18'	4°39' ± 0°18'	4°34' ± 0°18'
Pivot angle (not adjustable)	11°26' ± 0°30'	11°28' ± 0°30'	11°17' ± 0°30'
Tracking at the axle	0°17' ± 0°09'		
Tracking at the wheel	0°09' ± 0°04'		
Lower camber dissymmetry at 0°30’Lower castor dissymmetry at 0°30’			

Vehicle type	DV6 engine - Version 99 grammes CO2/km
Camber (not adjustable)	-0°33' ± 0°30'
Castor (not adjustable)	4°41' ± 0°18'
Pivot angle (not adjustable)	11°32' ± 0°30'
Tracking at the axle	0°17' ± 0°09'
Tracking at the wheel	0°09' ± 0°04'
Lower camber dissymmetry at 0°30’Lower castor dissymmetry at 0°30’	

5.2. Rear suspension

Vehicle type	Vehicle for Europe	CRD vehicles	Van	Estate vehicle OUTDOOR
Camber (not adjustable)	-1°42' ± 0°30'			
Tracking at the axle (not adjustable)	0°43' ± 0°09’	0°38' ± 0°09’	0°49' ± 0°09’	0°36' ± 0°09’
Tracking at the wheel (not adjustable)	0°21' ± 0°04'	0°19' ± 0°04'	0°24' ± 0°04'	0°18' ± 0°04'
Lower camber dissymmetry at 0°30’				

Vehicle type	DV6 engine - Version 99 grammes CO2/km
Camber (not adjustable)	-1°42' ± 0°30'
Tracking at the axle (not adjustable)	0°45' ± 0°09'
Tracking at the wheel (not adjustable)	0°22' ± 0°04'
Lower camber dissymmetry at 0°30’	

6. 208

6.1. Front suspension

Vehicle for Europe - CRD vehicles not raised			
	All engines except DV6, EP Turbo - DV6 engine with BE type gearbox	DV6 engines (Except BE gearbox) - EP engines Turbo	EngineEP6CDT
Camber angle (not adjustable)	-0°34' ± 0°30'	-0°36' ± 0°30'	-0°35' ± 0°30'
Castor (not adjustable)	4°24' ± 0°18'	4°24' ± 0°18'	4°42' ± 0°18'
Pivot angle (not adjustable)	11°24' ± 0°30'	11°30' ± 0°30'	11°30' ± 0°30'
Tracking at the axle (adjustable)	0°13' ± 0°09'	0°13' ± 0°09'	0°13' ± 0°09'
Tracking at the wheel (adjustable)	0°07' ± 0°04'	0°07' ± 0°04'	0°07' ± 0°04'
Lower camber dissymmetry at 0°30’Lower castor dissymmetry at 0°30’			

CRD vehicles raised	
Camber angle (not adjustable)	-0°29' ± 0°30'
Castor (not adjustable)	4°18' ± 0°18'
Pivot angle (not adjustable)	11°18' ± 0°30'
Tracking at the axle (adjustable)	0°13' ± 0°09'
Tracking at the wheel (adjustable)	0°07' ± 0°04'
Lower camber dissymmetry at 0°30’Lower castor dissymmetry at 0°30’	

6.2. Rear suspension

	Vehicle for Europe - CRD vehicles not raised	CRD vehicles raised

Camber angle (not adjustable)	-1°42' ± 0°30'	-1°42' ± 0°30'
Tracking at the axle (not adjustable)	0°43'± 0°09'	0°40' ± 0°09'
Tracking at the wheel (not adjustable)	0°22' ± 0°04'	0°20' ± 0°04'
Thrust angle	0° ± 0°30'	0° ± 0°30'
Lower camber dissymmetry at 0°30’		

7. 1007

7.1. Front suspension

Checking and adjusting values		
Tyres	175/65 R14	185/60 R15 - 195/50 R16
Camber	-0°24' ± 0°30'	-0°26' ± 0°30'
Castor	3°54' ± 0°18'	3°55' ± 0°18'
Pivot angle	11°16' ± 0°30'	11°21' ± 0°30'
Tracking at the wheel	0°08' ± 0°04'	

7.2. Rear suspension

Checking and adjusting values		
Tyres	175/65 R14	185/60 R15 - 195/50 R16
Tracking at the wheel	0°23' ± 0°04'	0°24' ± 0°04'
Camber	-1°29' ± 0°18'	-1°30' ± 0°18'

8. 301

8.1. Front suspension

Checking and adjusting values	
Camber angle (not adjustable)	-0°24' ± 0°30'
Castor (not adjustable)	4°36' ± 0°18'
Pivot angle (not adjustable)	11°18' ± 0°30'
Tracking at the axle (adjustable)	0°17'± 0°09'
Tracking at the wheel (adjustable)	0°09' ± 0°04'
Lower camber dissymmetry at 0°30’Lower castor dissymmetry at 0°30’	

8.2. Rear suspension

Checking and adjusting values	
Camber angle (not adjustable)	-1°42' ± 0°30'
Tracking at the axle (not adjustable)	0°41'± 0°09'
Tracking at the wheel (not adjustable)	0°21' ± 0°04'
Lower camber dissymmetry at 0°30’	

9. 308 (T7)

9.1. Front suspension

Saloon	Europe(Except EP6DTS and EP6CDTX engines)	CRD vehicles (Russia)	EP6DTS and EP6CDTX engines	STT
Camber : Left-hand wheel (not adjustable)	-0°18 (+0°36' ; -0°24)	-0°12 (+0°36' ; -0°24)	-0°24 (+0°36' ; -0°24)	-0°24' (+ 0°36' ; -0°24')
Camber : Right-hand wheel (not adjustable)	-0°18' (+0°24' ; -0°36')	-0°12' (+0°24' ; -0°36')	-0°24' (+0°24' ; -0°36')	-0°24' (+ 0°24' ; -0°36')
Castor (not adjustable)	5°12' ± 0°30'	5°06 ± 0°30'	5°12' ± 0°30'	+5°06' ± 0°30'
Pivot angle : Left-hand wheel (not adjustable)	12°54' (+0°24' ; -0°36')	12°42' (+0°24' ; -0°36')	13°12' (+0°24' ; -0°36')	+13°06' (+ 0°24' ; -0°36')
Pivot angle : Right-hand wheel (not adjustable)	12°54' (+0°36' ; -0°24')	12°42 (+0°36' ; -0°24)	13°12' (+0°36' ; -0°24')	+13°06' (+ 0°36' ; -0°24')
Tracking at the axle	-0°21 ± 0°09			
Tracking at the wheel	-0°11 ± 0°04			
Camber dissymmetry equal to 0°12' ± 0°28'Castor dissymmetry equal to 0° ± 0°20'Pivot angle dissymmetry equal to -0°12' ± 28'				

Estate	Europe(Except EP6DTS and EP6CDTX engines)	CRD vehicles	EP6DTS engine
Camber : Left-hand wheel (not adjustable)	-0°18 (+0°36' ; -0°24)	-0°12 (+0°36' ; -0°24)	-0°24 (+0°36' ; -0°24')
Camber : Right-hand wheel (not adjustable)	-0°18' (+ 0°24' ; -0°36')	-0°12' (+0°24' ; -0°36')	-0°24' (+0°24' ; -0°36')
Castor (not adjustable)	5° ± 0°30'	5°06' ± 0°30'	4°54' ± 0°30'
Pivot angle : Left-hand wheel (not adjustable)	12°54' (+0°24' ; -0°36')	12°42' (+0°24' ; -0°36')	13°06' (+0°24' ; -0°36')
Pivot angle : Right-hand wheel (not adjustable)	12°54' (+0°36' ; -0°24')	12°42' (+0°36' ; -0°24')	13°06' (+0°36' ; -0°24')
Tracking at the axle	-0°21' ± 0°09'		
Tracking at the wheel	-0°11' ± 0°04'		
Camber dissymmetry equal to 0°12' ± 0°28'Castor dissymmetry equal to 0° ± 0°20'Pivot angle dissymmetry equal to -0°12' ± 28'			

Version	Coupe cabriolet	Commercial vehicle
Camber : Left-hand wheel (not adjustable)	-0°24' (+0°36' ; -0°24')	-0°18' (+0°36' ; -0°24')
Camber : Right-hand wheel (not adjustable)	-0°24' (+0°24' ; -0°36')	-0°18' (+0°24' ; -0°36')
Castor (not adjustable)	5°12' ± 0°30'	5°42' ± 0°30'
Pivot angle : Left-hand wheel (not adjustable)	13°12' (+0°24' ; -0°36')	12°54' (+0°24' ; -0°36')
Pivot angle : Right-hand wheel (not adjustable)	13°12' (+0°36' ; -0°24')	12°54' (+0°36' ; -0°24')
Tracking at the axle	-0°17' ± 0°09'	-0°21' ± 0°09'
Tracking at the wheel	-0°09' ± 0°04'	-0°11' ± 0°04'
Camber dissymmetry equal to 0°12' ± 0°28'Castor dissymmetry equal to 0° ± 0°20'Pivot angle dissymmetry equal to -0°12' ± 28'		

9.2. Rear suspension

Saloon	Europe(Except EP6DTS and EP6CDTX engines)	CRD vehicles (Russia)	Engines EP6DTS and EP6CDTX	STT
Camber (not adjustable)	-1°42' ± 0°30'			
Tracking at the axle (not adjustable)	0°55' ± 0°09'	0°51' ± 0°09'	0°58' ± 0°09'	
Tracking at the wheel (not adjustable)	0°28' ± 0°04'	0°25' ± 0°04'	0°29' ± 0°04'	
Thrust angle	0° ± 0°10'			
Camber dissymmetry equal to 0° ± 0°20'				

Estate	Europe(Except EP6DTS engine)	CRD vehicles	EP6DTS engine
Camber (not adjustable)	-1°42' ± 0°30'		
Tracking at the axle (not adjustable)	0°51' ± 0°09'		0°53' ± 0°09'
Tracking at the wheel (not adjustable)	0°25' ± 0°04'	0°25' ± 0°04'	0°27' ± 0°04'
Thrust angle	0° ± 0°10'	0° ± 0°10'	0° ± 0°10'
Camber dissymmetry equal to 0° ± 0°20'			

	Coupe cabriolet	Commercial vehicle
Camber (not adjustable)	-1°42' ± 0°30'	
Tracking at the axle (not adjustable)	0°58' ± 0°09'	1°04' ± 0°09'
Tracking at the wheel (not adjustable)	0°29' ± 0°04'	0°31' ± 0°04'
Thrust angle	0° ± 0°10'	
Camber dissymmetry equal to 0° ± 0°20'		

10. 308 (T9)

10.1. Front suspension

Checking and adjusting values	
Camber : (not adjustable)	-0° 30' (± 0° 30')
Castor (not adjustable)	+4° 12' (± 0° 30')
Pivot angle (not adjustable)	+13°24' (± 0° 30')
Tracking at the axle	-0° 13' (± 0° 09')
Tracking at the wheel	-0° 06' (± 0° 04')
Camber dissymmetry less than 0° 20'Caster dissymmetry less than 0° 20'	

10.2. Rear suspension

	All types except entreprise and CRD vehicles	CRD vehicles	Entreprise vehicles
Camber (not adjustable)	-1° 36' ± 0° 30'	-1° 36' (± 0° 30')	-1° 48' (± 0° 30')
Tracking at the axle (not adjustable)	+0° 44' ± 0° 09'	+0° 40' (± 0° 09')	+0° 50' (± 0° 09')
Tracking at the wheel (not adjustable)	+0° 22' ± 0° 04'	+0° 20' (± 0° 04')	+0° 25' (± 0° 04')
Lower camber dissymmetry at 0°30’			

11. RCZ

11.1. Front suspension

Checking and adjusting values	
Camber : (not adjustable)	0°24' ± 0°30'
Castor (not adjustable)	5°24' ± 0°30'
Pivot angle (not adjustable)	13°12' ± 0°30'
Tracking at the axle	-0°21' ± 0°09'
Tracking at the wheel	-0°11' ± 0°04'
Camber left-right dissymmetry : 0° ± 0°28’Castor dissymmetry 0° ± 0°20'Pivot angle dissymmetry 0° ± 0°28'	

11.2. Rear suspension

Checking and adjusting values	
Camber (not adjustable)	-1°42' ± 0°30'
Tracking at the axle	0°47' ± 0°10'
Thrust angle	0° ± 0°10'
Camber dissymmetry 0° ± 0°20	

12. 2008

12.1. Front suspension

Checking and adjusting values		
Engine type	All engines except DV6, EP Turbo	DV6, EP engines Turbo
Camber angle (not adjustable)	-0°29' ± 0°30'	-0°31' ± 0°30'
Castor (not adjustable)	4°12' ± 0°18'	4°18' ± 0°18'
Pivot angle (not adjustable)	11°12' ± 0°30'	11°12' ± 0°30'
Tracking at the axle (adjustable)	0°13' ± 0°09'	0°13' ± 0°09'
Tracking at the wheel (adjustable)	0°07' ± 0°04'	0°07' ± 0°04'
Lower camber dissymmetry at 0°30’Lower castor dissymmetry at 0°30’Pivot dissymmetry less than 0°30’		

12.2. Rear suspension

Checking and adjusting values	
Camber angle (not adjustable)	-1°42' ± 0°30'
Tracking at the axle (not adjustable)	0°37' ± 0°09'
Tracking at the wheel (not adjustable)	0°19' ± 0°04'
Thrust angle	0° ± 0°30'
Lower camber dissymmetry at 0°30’	

13. 3008

13.1. Front suspension

Checking and adjusting values : Vehicles without hybrid drive train	
Camber : Left-hand wheel (not adjustable)	-0°12' (+0°36' ; -0°24')
Camber : Right-hand wheel (not adjustable)	-0°12' (+0°24' ; -0°36')
Castor (not adjustable)	4°54' ± 0°30'
Pivot angle : Left-hand wheel (not adjustable)	12°42' (+0°24' ; -0°36')
Pivot angle : Right-hand wheel (not adjustable)	12°42' (+0°36' ; -0°24')
Tracking at the axle	-0°21' ± 0°09'
Tracking at the wheel	-0°11' ± 0°04'
Camber dissymmetry equal to 0°12' ± 28'Castor dissymmetry equal to 0° ± 20'Pivot angle dissymmetry equal to -0°12' ± 28'	

Checking and adjusting values : Vehicles with hybrid drive train	
Camber : Left-hand wheel (not adjustable)	-0°12' (+0°36' ; -0°24')
Camber : Right-hand wheel (not adjustable)	-0°12' (+0°24' ; -0°36')
Castor (not adjustable)	4°36' ± 0°30'
Pivot angle : Left-hand wheel (not adjustable)	12°42' (+0°24' ; -0°36')
Pivot angle : Right-hand wheel (not adjustable)	12°42' (+0°36' ; -0°24')
Tracking at the axle	-0°21' ± 0°09'
Tracking at the wheel	-0°11' ± 0°04'
Camber dissymmetry equal to 0°12' ± 28'Castor dissymmetry equal to 0° ± 20'Pivot angle dissymmetry equal to -0°12' ± 28'	

13.2. Rear suspension

Checking and adjusting values : Vehicles without hybrid drive train	
Camber (not adjustable)	-1°48' ± 0°30'
Tracking at the axle (not adjustable)	0°54' ± 0°10'
Tracking at the wheel (not adjustable)	0°27' ± 0°05'
Thrust angle	0° ± 0°10'
Camber dissymmetry equal to 0° ± 20'	

Checking and adjusting values : Vehicles with hybrid drive train	
Camber (not adjustable)	-1°55' ± 0°30'
Tracking at the axle (not adjustable)	0°43' ± 0°09'
Tracking at the wheel (not adjustable)	0°21' ± 0°04'
Thrust angle	0° ± 0°30'
Camber dissymmetry equal to 0° ± 20'	

14. 5008

14.1. Front suspension

Version	Europe: 5 seater	Europe: 7 seater	CRD vehicles
Camber : Left-hand wheel (not adjustable)	-0°18' (+0°36' ; -0°24')		-0°12' (+0°36' ; -0°24')
Camber : Right-hand wheel (not adjustable)	-0°18' (+0°24' ; -0°36')		-0°12' (+0°24' ; -0°36')
Castor (not adjustable)	4°24' ± 0°30'	4°48' ± 0°30'	4°42' ± 0°30'
Pivot angle : Left-hand wheel (not adjustable)	13° (+0°24' ; -0°36')	13°06' (+0°24' ; -0°36')	12°42' (+0°24' ; -0°36')

Pivot angle : Right-hand wheel (not adjustable)	13° (+0°36' ; -0°24')	13°06' (+0°36' ; -0°24')	12°42' (+0°36' ; -0°24')
Tracking at the axle	-0°21' ± 0°09'		
Camber dissymmetry equal to 0°12' ± 28'Castor dissymmetry equal to 0° ± 20'Pivot angle dissymmetry equal to -0°12' ± 28'			

14.2. Rear suspension

Version	Europe: 5 seater	Europe: 7 seater	CRD vehicles
Camber (not adjustable)	-1°44' ± 0°30'	-1°42' ± 0°30'	
Tracking at the axle (not adjustable)	0°42' ± 0°09'	0°53' ± 0°09'	
Thrust angle	0° ± 0°10'		
Camber dissymmetry 0° ± 0°20'			

15. 4007

15.1. Front suspension

Checking and adjusting values	
Camber (not adjustable)	0°20' ± 0°30
Castor (not adjustable)	2°35' ± 0°30'
Pivot angle	12°45 ± 1°30'
Tracking at the wheel	0°02' ± 0°04'
Lower camber dissymmetry at 0°30’Lower castor dissymmetry at 0°30’	

15.2. Rear suspension

Checking and adjusting values	
Camber (not adjustable)	0°25' ± 0°30'
Tracking at the wheel	0°02' à 0°12'
Lower camber dissymmetry at 0°30’	

16. 4008

16.1. Front suspension

Checking and adjusting values	
Camber (not adjustable)	0°15' ± 0°30'
Castor (not adjustable)	2°40' ± 0°30'
Pivot angle	13°00' ± 1°30'
Tracking at the wheel (adjustable)	0°03’ ± 0°05’
Lower camber dissymmetry at 0°30’Lower castor dissymmetry at 0°30’	

16.2. Rear suspension

Checking and adjusting values	
Camber (not adjustable)	- 0°25' ± 0°30'
Tracking at the wheel (adjustable)	0°08’ to 0°15’
Lower camber dissymmetry at 0°30’	

17. 508 China

17.1. Front suspension

Checking and adjusting values	
Camber : Left-hand wheel (not adjustable)	-0°24' ± 0°30'
Camber : Right-hand wheel (not adjustable)	-0°42' ± 0°30'
Castor (not adjustable)	+4°18' ± 0°30'
Pivot angle : Left-hand wheel (not adjustable)	+15° ± 0°30'
Pivot angle : Right-hand wheel (not adjustable)	+15°18' ± 0°30'
Tracking at the axle (adjustable)	+0°09' ± 0°09'
Tracking at the wheel (adjustable)	+0°04' ± 0°04'
Camber dissymmetry 0° 18' ± 0°30'Castor dissymmetry 0 °± 0°30'Pivot angle dissymmetry -0° 18' ± 0°30'	

17.2. Rear suspension

Checking and adjusting values	
Camber (not adjustable)	-1°53' ± 0°30'
Thrust angle	0° ± 0°30'
Tracking at the axle (adjustable)	+ 0°34' ± 0°09'
Camber dissymmetry 0° ± 0°30'	

18. 508

18.1. Front suspension

Checking and adjusting values : Vehicles without hybrid drive train			
Version	Vehicle for Europe (Except DW12C engine)	Vehicle for Europe DW12C	CRD vehicles
Camber : Left-hand wheel (not adjustable)	-0°24' ± 0°30'	-0°20' ± 0°30'	-0°08' ± 0°30'
Camber : Right-hand wheel (not adjustable)	-0°42' ± 0°30'	-0°40' ± 0°30'	-0°26' ± 0°30'
Castor (not adjustable)	4°18' ± 0°30'	5°30' ± 0°30'	4°12' ± 0°30'
Pivot angle : Left-hand wheel (not adjustable)	15° ± 0°30'	8°06' ± 0°30'	14°36' ± 0°30'
Pivot angle : Right-hand wheel (not adjustable)	15°18' ± 0°30'	8°24' ± 0°30'	14°54' ± 0°30'
Tracking at the axle	0°09' ± 0°09'		
Tracking at the wheel	0°04' ± 0°04'		
Castor dissymmetry	0° ± 0°30'		
Camber dissymmetry	-0°12'≥Camber dissymmetry ≤+0°51'		
Pivot angle dissymmetry	-0°48'≥Pivot angle dissymmetry ≤+0°12'		

Checking and adjusting values : Vehicles with hybrid drive train		
Shape	ALLROAD estate	Saloon
Camber : Left-hand wheel (not adjustable)	-0°24' ± 0°30'	-0°24' ± 0°30'
Camber : Right-hand wheel (not adjustable)	-0°42' ± 0°30'	-0°42' ± 0°30'
Castor (not adjustable)	4°12' ± 0°30'	4°18' ± 0°30'
Pivot angle : Left-hand wheel (not adjustable)	15°18' ± 0°30'	15° ± 0°30'
Pivot angle : Right-hand wheel (not adjustable)	15°36' ± 0°30'	15°18' ± 0°30'
Tracking at the axle (adjustable)	0°09' ± 0°09'	0°09' ± 0°09'
Tracking at the wheel (adjustable)	0°04' ± 0°04'	0°04' ± 0°04'
Castor dissymmetry	0° ± 0°30'	0° ± 0°30'
Camber dissymmetry	0°18' ± 0°30'	0°18' ± 0°30'
Pivot angle dissymmetry	0°18' ± 0°30'	0°18' ± 0°30'

18.2. Rear suspension

Checking and adjusting values : Vehicles without hybrid drive train				
Version	Europe(Except DW12C engine)	Europe(Except DW12C engine)	Europe (engine DW12C)	CRD vehicles
Shape	Estate	Saloon	Estate/Saloon	Saloon
Camber (not adjustable)	-1°48' ± 0°30'	-1°54' ± 0°30'		-1°36' ± 0°30'
Thrust angle	0° ± 0°30'			
Tracking at the axle (adjustable)	0°43' ± 0°09'			
Tracking at the wheel (adjustable)	0°21' ± 0°04'			
Camber dissymmetry 0° ± 0°30'				

Checking and adjusting values : Vehicles with hybrid drive train		
Shape	ALLROAD estate	Saloon
Camber (not adjustable)	-1°56' ± 0°30'	-2°16' ± 0°30'
Thrust angle	0° ± 0°30'	0° ± 0°30'
Tracking at the axle (adjustable)	0°34' ± 0°09'	0°34' ± 0°09'
Tracking at the wheel (adjustable)	0°17' ± 0°04'	0°17' ± 0°04'
Camber dissymmetry 0° ± 0°30'		

19. Bipper

19.1. Front suspension

Checking and adjusting values				
Tyre size	175/70 R14	185/65 R15	175/70 R14	185/65 R15
Fuel level	Tank full		5 litres (maximum of	
Camber (not adjustable)	-0°10' ± 0°20'	-0°04' ± 0°20'	-0°08' ± 0°20'	-0°02' ± 0°20'
Castor (not adjustable)	2°38' ± 0°30'	2°40' ± 0°30'	2°44' ± 0°30'	2°46' ± 0°30'
Pivot angle (not adjustable)	13 °			
Tracking at the axle	-0 °09' ± 0°09'			

19.2. Rear suspension

Checking and adjusting values				
Tyre size	175/70 R14	185/65 R15	175/70 R14	185/65 R15
Fuel level	Tank full		(filling limited to 5 litres)	
Camber (not adjustable)	-0 °32' ± 0°20'	-0 °31' ± 0°20'	-0 °31' ± 0°20'	-0 °30' ± 0°20'
Tracking at the axle	0°08' ± 0°09'		0°07' ± 0°09'	

20. Partner(M59)

20.1. Front suspension

car(Not : Rear leaf suspension)	With suspension 800 kg	Without suspension 800 kg (Michelin Energy E3A)	Without suspension 800 kg (Not Michelin Energy E3A)
Tracking	-'0º17' ± 0º09'		0º09' ± 0º09'
Camber	0º ± 0°30'		
Castor	3º ± 0°30'		
Pivot angle	10º54' ± 0°30'	10º44' ± 0°30'	
Lower castor dissymmetry at 0°18'Lower camber dissymmetry at 0°39'			

car(Not : Rear leaf suspension)	With suspension 800 kg	Without suspension 800 kg	All types except for Michelin Energy E3A	Michelin Energy E3A
Version	Raised or CRD		VTC	
Tracking	-0º17' ± 0º09'			0º09' ± 0º09'
Camber	0º ± 0º30'			
Castor	2º58' ± 0º30'	2º55' ± 0º30'		
Pivot angle	10º38' ± 0º30'	10º26' ± 0º30'		
Lower castor dissymmetry at 0°18'Lower camber dissymmetry at 0°39'				

Van (Not : Rear leaf suspension)	Platform or cab	Raised or CRD	Electrical
Tracking	-0º17' ± 0º09'		
Camber	0º ± 0°30'		
Castor	3° ± 0°30'		
Pivot angle	10º54' ± 0°30'	10º38' ± 0°30'	10º30' ± 0°30'
Lower castor dissymmetry at 0°18'Lower camber dissymmetry at 0°39'			

Rear leaf suspension (Except raised or CRD)	car	Van	car	Van
engines	TU5, DV6A and DV6B		DW8	
Camber	-0º01' ± 0º30'	-0º04' ± 0º30'	-0º05' ± 0º30'	
Castor	3° ± 0°30'	3°03' ± 0°18'	3°05' ± 0°18'	
Pivot angle	10º42' ± 0º30'	10º48' ± 0º30'	10º12' ± 0º30'	10º54' ± 0º30'
Tracking at the axle	-0°17' ± 0°09'	-0°09' ± 0°09'	-0°17' ± 0°09'	
Tracking at the wheel	-0°09' ± 0°04'	-0°04' ± 0°04'	-0°09' ± 0°04'	
Lower castor dissymmetry at 0°18'Lower camber dissymmetry at 0°39'				

car: Rear leaf suspension (Raised or CRD)	TU5, DV6A and DV6B engines	DW8 engine
Camber (not adjustable)	0°08' ± 0°30'	0°02' ± 0°30'
Castor (not adjustable)	2°57' ± 0°18'	3° ± 0°18'
Pivot angle (not adjustable)	10º24' ± 0º30'	10º36' ± 0º30'
Tracking at the axle	-0°17' ± 0°09'	0°17' ± 0°09'
Tracking at the wheel	- 0°09' ± 0°04'	
Lower castor dissymmetry at 0°18'Lower camber dissymmetry at 0°39'		

Utility version : Rear leaf suspension (Raised or CRD)	TU5 engines - DV6B	DV6A engine	DW8 engine
Camber (not adjustable)	0º12' ± 0º30'	0º08' ± 0º30'	0º05' ± 0º30'
Castor (not adjustable)	2°56' ± 0°18'	2°57' ± 0°18'	2°59' ± 0°18'
Pivot angle (not adjustable)	10º18' ± 0º30'	10º24' ± 0º30'	10º30' ± 0º30'
Tracking at the axle	-0°17' ± 0°09'		-0°09' ± 0°09'
Tracking at the wheel	-0°09' ± 0°04'		-0°04' ± 0°04'
Lower castor dissymmetry at 0°18'Lower camber dissymmetry at 0°39'			

20.2. Rear suspension

car(Not : Rear leaf suspension)	Without suspension 800 kg	With suspension 800 kg	Without suspension 800 kg	With suspension 800 kg	all models
Version	all models(Without height adjuster, CRD and VTC)		Raised or CRD		VTC
Tracking	0º13' ± 0º11	0º42' ± 0º11	0º33' ± 0º11	0º04' ± 0º11	0º04' ± 0º11
Camber	-1º16 ± 0°30'	-1º13 ± 0°30'	-1º14 ± 0°30'	-1º16 ± 0°30'	
Camber dissymmetry less than 0°30'					

Van (Not : Rear leaf suspension)	Electrical	Raised or CRD	Platform or cab
Tracking	0º29' ± 0º11	0º33' ± 0º11	0º42' ± 0º11
Camber	-1º14 ± 0°30'		-1º13 ± 0°30'
Camber dissymmetry less than 0°30			

Vehicles with rear leaf suspension	all models
Camber (not adjustable)	-1º15 ± 0°30'
Tracking at the axle (not adjustable)	0° ± 0°11
Tracking at the wheel (not adjustable)	0° ± 0°05
Camber dissymmetry 0° ± 0°25	

21. 807

21.1. Front suspension

Checking and adjusting values	
Tracking at the axle	0°17' ± 0°09'
Camber (not adjustable)	0° ± 0°30'

Castor (not adjustable)	3°30' ± 0°30'
Pivot angle (not adjustable)	12°24' ± 0°30'

21.2. Rear suspension

Checking and adjusting values		
engines	EW, DW up to RPO 9789 - ES9 up to RPO 9927	EW, DW from RPO 9790 - ES9 from RPO 9928
Tracking at the axle	0°43' ± 0°09'	0°29' ± 0°09'
Camber (not adjustable)	-1° ± 0°30'	-1°30' ± 0°30'

22. Partner (B9)

22.1. Front suspension

car	All types except finishes : XTR - VTC - CRD vehicles - PC - Stop and start	Finishing : XTR - VTC - CRD vehicles - PC	STT
Camber : Left-hand wheel (not adjustable)	0°01' (+0°40' ; -0°20')	0°03' (+0°40' ; -0°20')	0° (+0°40' ; -0°20'
Camber : Right-hand wheel (not adjustable)	0°01' (+0°20' ; -0°40')	0°03' (+0°20' ; -0°40')	0° (+0°20' ; -0°40'
Castor (not adjustable)	4°54' ± 0°30'	4°42' ± 0°30'	4°54' ± 0°30'
Pivot angle : Left-hand wheel (not adjustable)	11°42' (+0°20' ; -0°40')	11°30' (+0°20' ; -0°40')	11°48' (+0°20' ; -0°40')
Pivot angle : Right-hand wheel (not adjustable)	11°42' (+0°40' ; -0°20')	11°30' (+0°40' ; -0°20')	11°48' (+0°40' ; -0°20')
Tracking at the axle	- 0°13' ± 0°09'		
Tracking at the wheel	- 0°06 ± 0°04'		
Camber dissymmetry equal to 0°20' ± 0°28'Castor dissymmetry equal to 0° ± 0°20'Pivot angle dissymmetry equal to - 0°20' ± 0°28'			

Van	All types except for STT	STT	Electrical
Camber : Left-hand wheel (not adjustable)	0°01' (+0°40' ; -0°20')	0° (+0°40' ; -0°20')	+0°03' (+0°40' ; -0°20')
Camber : Right-hand wheel (not adjustable)	0°01' (+0°20' ; -0°40')	0° (+0°20' ; -0°40')	+0°03' (+0°20' ; -0°40')
Castor (not adjustable)	5°12' ± 0°30'	4°54' ± 0°30'	+4°54' (± 0°30')
Pivot angle : Left-hand wheel (not adjustable)	11°42' (+0°20' ; -0°40')	11°48' (+0°20' ; -0°40')	+11°30' (+0°20' ; -0°40')
Pivot angle : Right-hand wheel (not adjustable)	11°42' (+0°40' ; -0°20')	11°48' (+0°40' ; -0°20')	+11°30' (+0°40' ; -0°20')
Tracking at the axle	- 0°13' ± 0°09'		
Tracking at the wheel	- 0°06 ± 0°04'		
Camber dissymmetry equal to 0°20' ± 0°28'Castor dissymmetry equal to 0° ± 0°20'Pivot angle dissymmetry equal to -0°20' ± 0°28'			

22.2. Rear suspension

car	All types except finishes : XTR - VTC - CRD vehicles - PC - Stop and start	Finishing : XTR - VTC - CRD vehicles - PC	STT
Camber (not adjustable)	- 1°42' ± 0°30'	- 1°44' ± 0°30'	- 1°46' ± 0°30'
Thrust angle	0° ± 0°10		
Tracking at the axle (not adjustable)	0°52' ± 0°09'	0°48' ± 0°09'	0°53' ± 0°09
Tracking at the wheel (not adjustable)	0°26' ± 0°04'	0°24' ± 0°04'	0°27' ± 0°04
Camber dissymmetry equal to 0° ± 0°20'			

Van	All types except for STT	STT	Electrical
Camber (not adjustable)	- 1°44' ± 0°30'	- 1°43' ± 0°30'	-1°41' ± 0°30'
Thrust angle	0° ± 0°10	0° ± 0°10	0° ± 0°10
Tracking at the axle (not adjustable)	0°55' ± 0°09'	0°57' ± 0°09'	0°50' ± 0°09'
Tracking at the wheel (not adjustable)	0°28' ± 0°04'	0°28' ± 0°04'	0°25' ± 0°04'
Camber dissymmetry equal to 0° ± 0°20'			

23. Expert 3

23.1. Front suspension

Combi vehicle	Metallic suspension	Pneumatic suspension	Metallic suspension	Pneumatic suspension
Version	Short		Long	
Camber (not adjustable)	0° ± 0°30			
Castor (not adjustable)	3°34' ± 0°30'	3°41' ± 0°30'	3°39' ± 0°30'	3°46' ± 0°30'
Pivot angle (not adjustable)	12°08 ± 0°30			
Tracking at the axle	- 0°09' ± 0°09'		0°17' ± 0°09'	
Tracking at the wheel	- 0°04' ± 0°04'		0°09' ± 0°04'	
Camber dissymmetry less than 0°18'Lower pivot angle dissymmetry at 0 ° 24 ’				

Van	Metallic suspension	Pneumatic suspension	Metallic suspension	Pneumatic suspension
Version	Short		Long	
Camber (not adjustable)	0°05 ± 0°30			

Castor (not adjustable)	4°15' ± 0°30'	3°39' ± 0°30'	4°18' ± 0°30'	3°43' ± 0°30'
Pivot angle (not adjustable)	12°15 ± 0°30			
Tracking at the axle	- 0°17' ± 0°09'			
Tracking at the wheel	- 0°09' ± 0°09'			
Lower camber dissymmetry at 0°18'Lower pivot angle dissymmetry at 0 ° 24 '				

23.2. Rear suspension

Combi vehicle	Metallic suspension	Pneumatic suspension	Metallic suspension	Pneumatic suspension
Version	Short		Long	
Camber (not adjustable)	-1°42 ± 0°30			
Tracking at the axle (not adjustable)	0°38' ± 0°09'	0°40' ± 0°09'	0°39' ± 0°09'	0°40' ± 0°09'
Tracking at the wheel (not adjustable)	0°19' ± 0°04'			0°20' ± 0°04'
Lower camber dissymmetry at 0°18'				

Van	Metallic suspension	Pneumatic suspension	Metallic suspension	Pneumatic suspension
Version	Short		Long	
Camber (not adjustable)	- 1°48' ± 0°30'	- 1°42' ± 0°30'	- 1°48' ± 0°30'	- 1°42' ± 0°30'
Tracking at the axle (not adjustable)	0°47' ± 0°09'	0°40' ± 0°09'	0°50' ± 0°09'	0°40' ± 0°09'
Tracking at the wheel (not adjustable)	0°24' ± 0°04'	0°19' ± 0°04'	0°25' ± 0°04'	0°20' ± 0°04'
Lower camber dissymmetry at 0°18'				

24. BOXER

24.1. Front suspension

Checking and adjusting values	
Tracking	- 0°09' ± 0°09'
Castor (not adjustable)	1°45' ± 0°30'
Camber (not adjustable)	0° ± 0°30'
Pivot angle	10°45' ± 0°30'

24.2. Rear suspension

Checking and adjusting values	
Tracking (not adjustable)	0° ± 0°17
Camber (not adjustable)	-

ADJUSTMENT : PLACING AT THE REAR AXLE TIGHTENING REFERENCE HEIGHT

CAUTION : The suspension components of the rear axle must be tightened with the vehicle at the reference height. Failure to observe these conditions would result in the distortion of the silent blocks or an inefficient tightening of the suspension blade clamps.

1. Vehicle with metal suspension

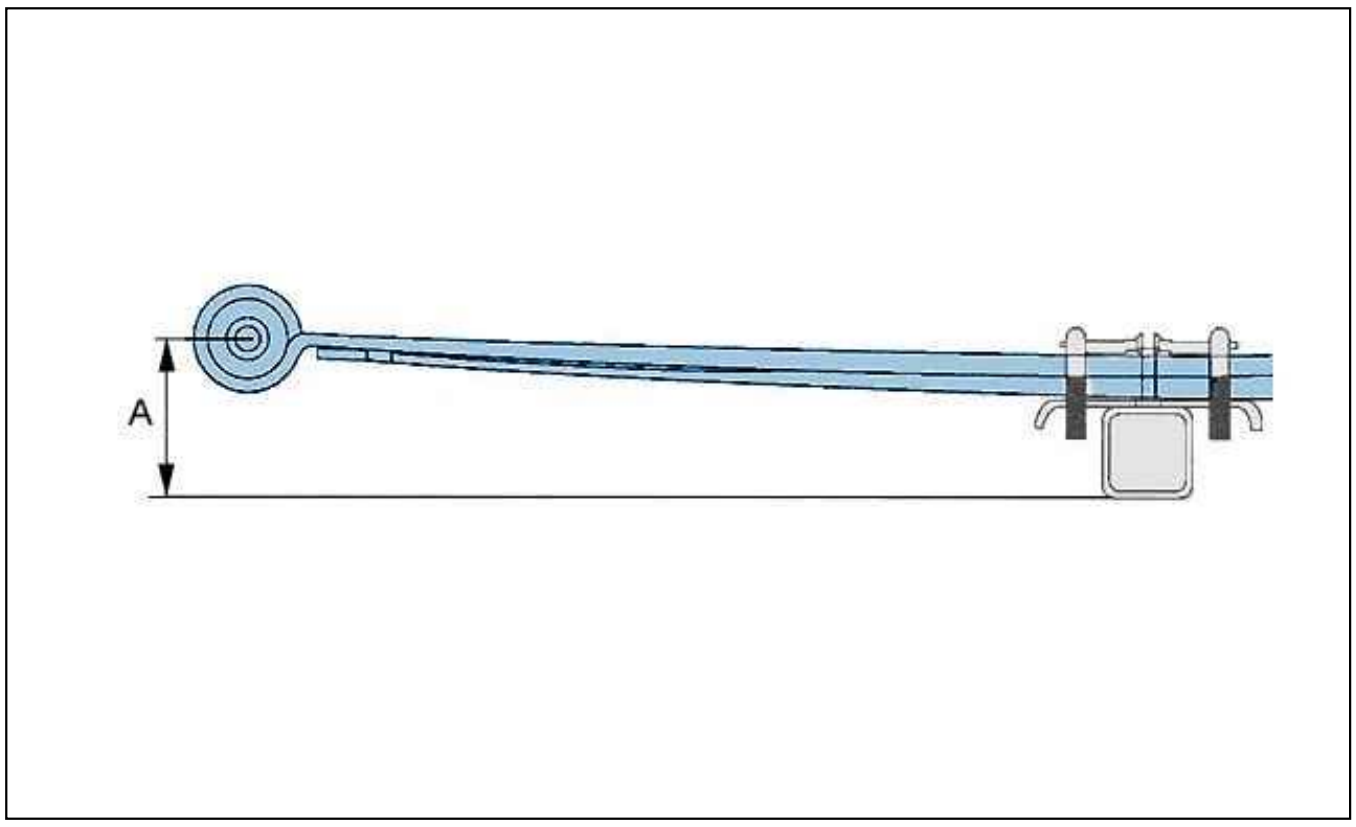

Figure : B3BP1G9D

version	Heavy and light vehicles	Mobile home - Cab platform
"A" : Height	248 mm	300 mm

The height " A " is measured between the suspension blade front fixing centreline and the underneath of the rear axle crossmember.
The reference height is obtained by loading the vehicle.

2. Vehicle with pneumatic suspension

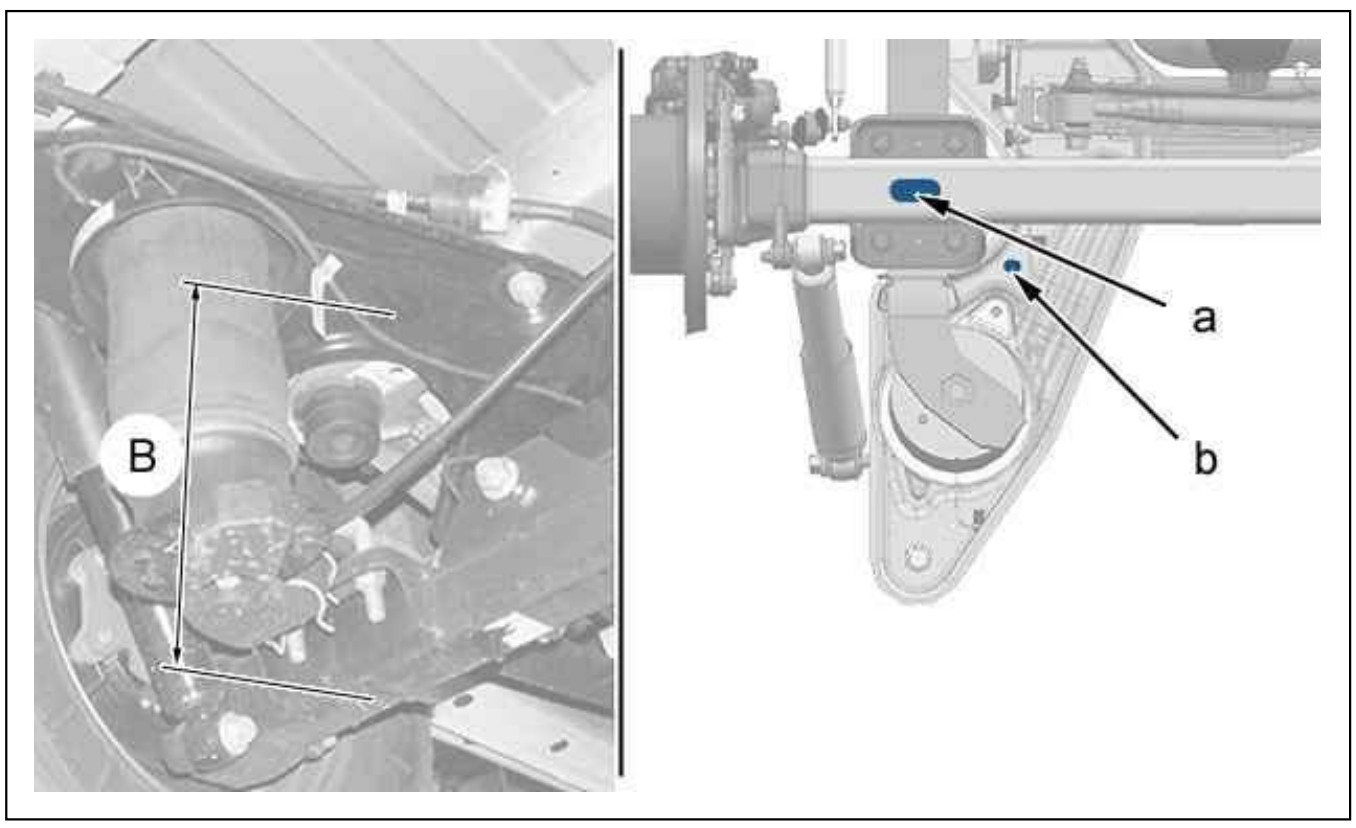

Figure : B3BF007D

version	Vehicle with pneumatic suspension
"B": Height	210 mm

"B" : Measure between the measurement zone "b" underneath the mounting for the pneumatic suspension units and the measurement zone "a" under the rea axle crossmember.

REMOVING - REFITTING : FRONT ANTI -ROLL BAR

1. Recommended tools

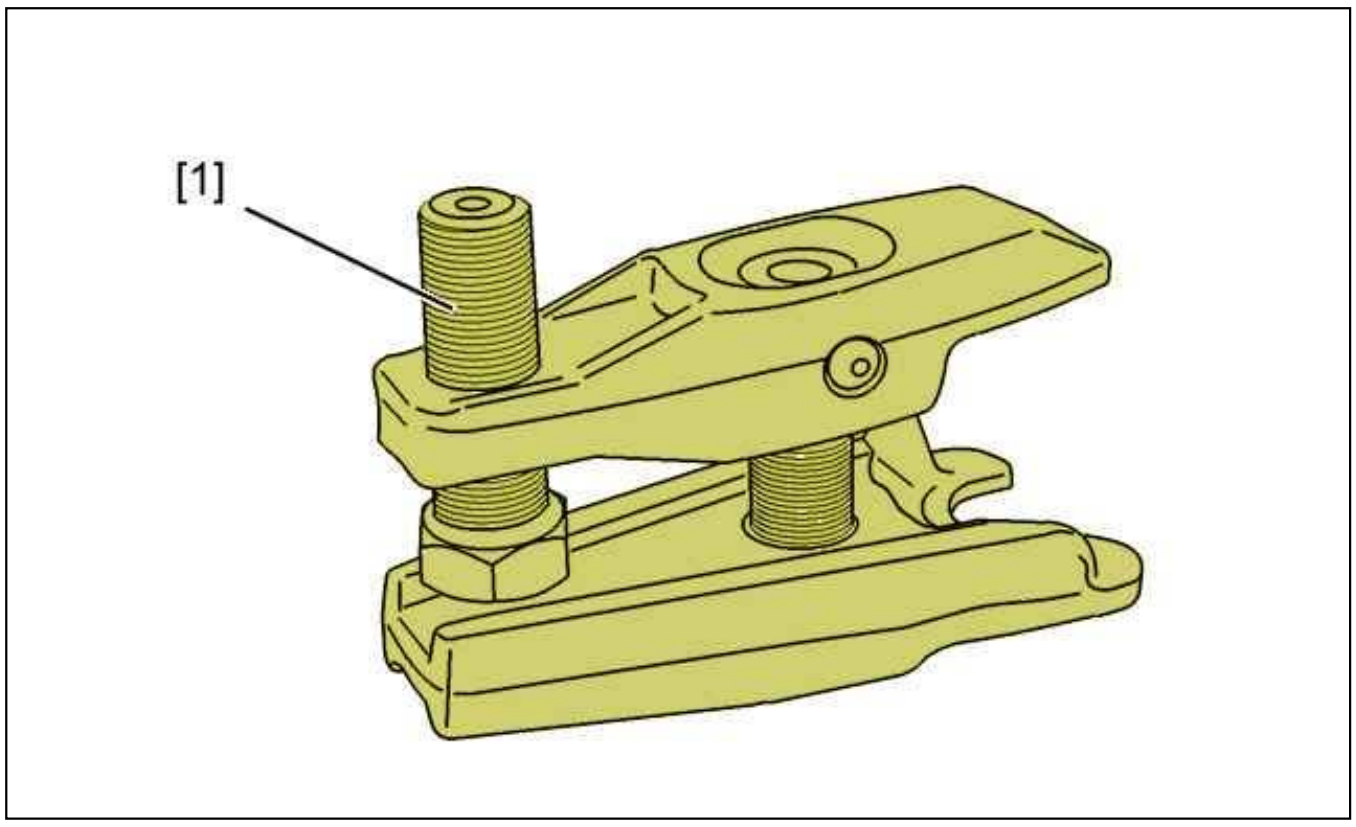

Figure : E5AP2WYD

Reference	Designation	Reference	Reference
[1]	ball-joint extractor	5707-T	(-).0919

2. Removing

Disconnect the battery negative terminal.
Untighten the wheel screws (left hand front).
Lift and support the front of the vehicle.
Remove the left-hand front wheel.

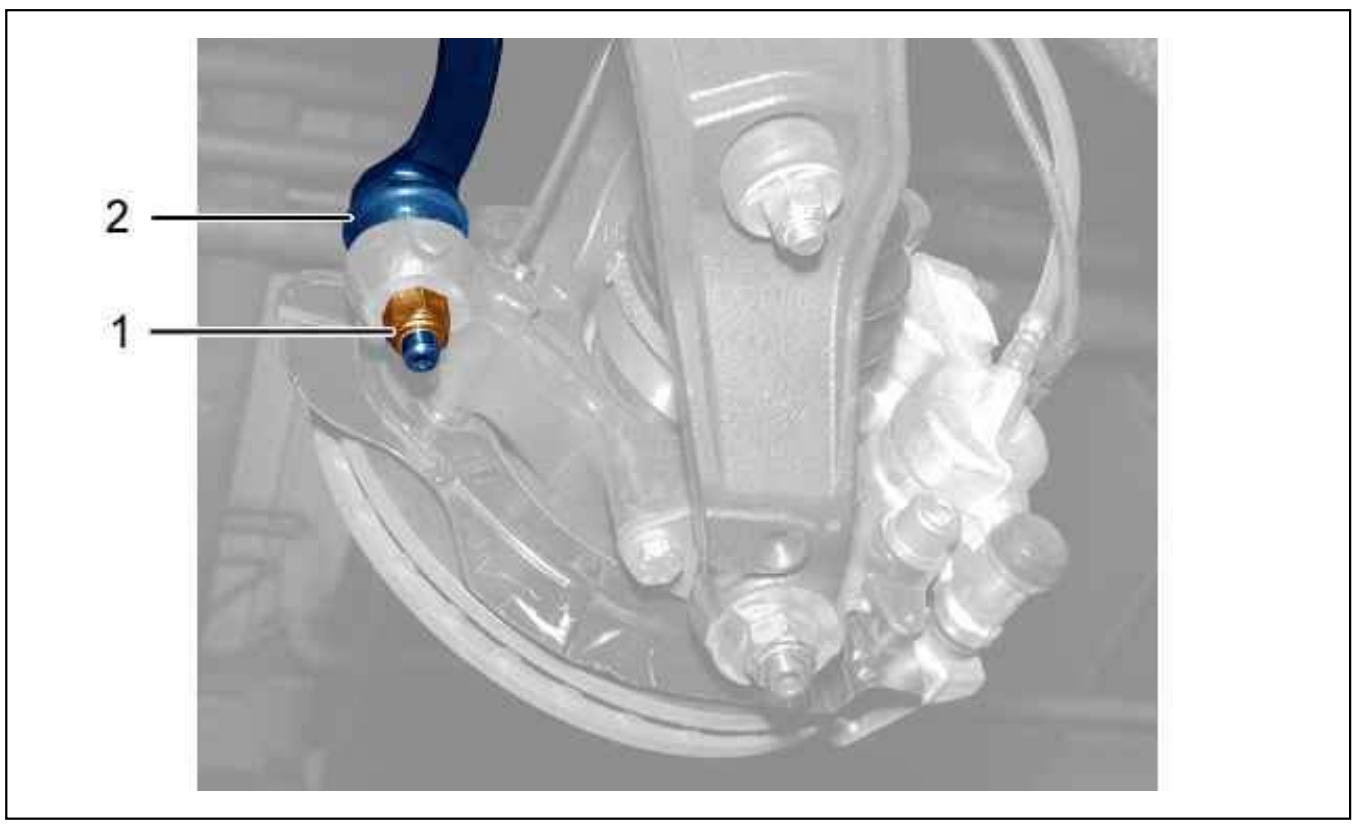

Figure : B3FP7JJD

Remove the nut (1) (left side).
Uncouple the steering ball-joint (2) ; Using tool [1].

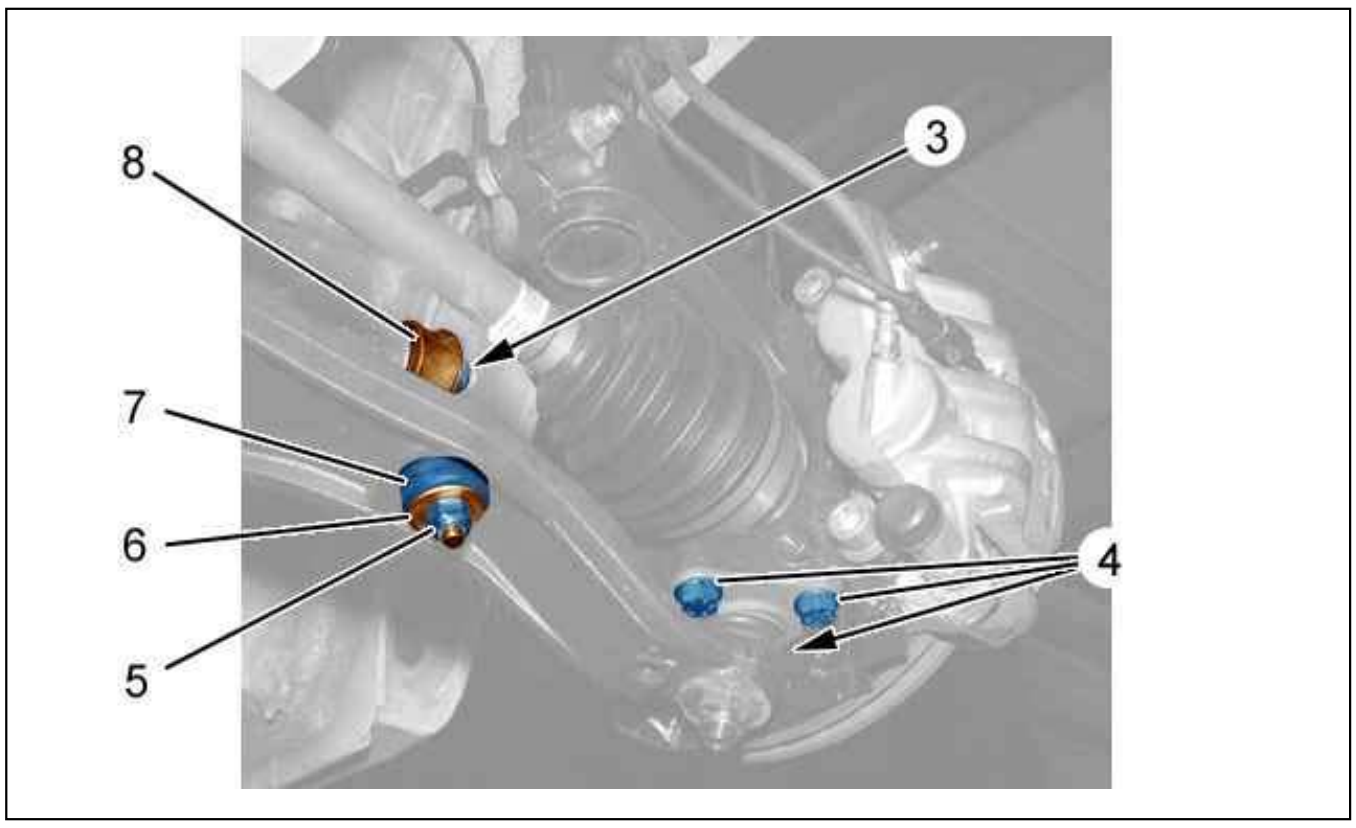

Figure : B3BP1CDD

Remove the 3 bolts (4).
Move the hub carrier forward.
Remove (on each side) :

- Remove the nuts (3), (5)
- The washer (6)
- The silentblock (7)
- The connecting rod (8)

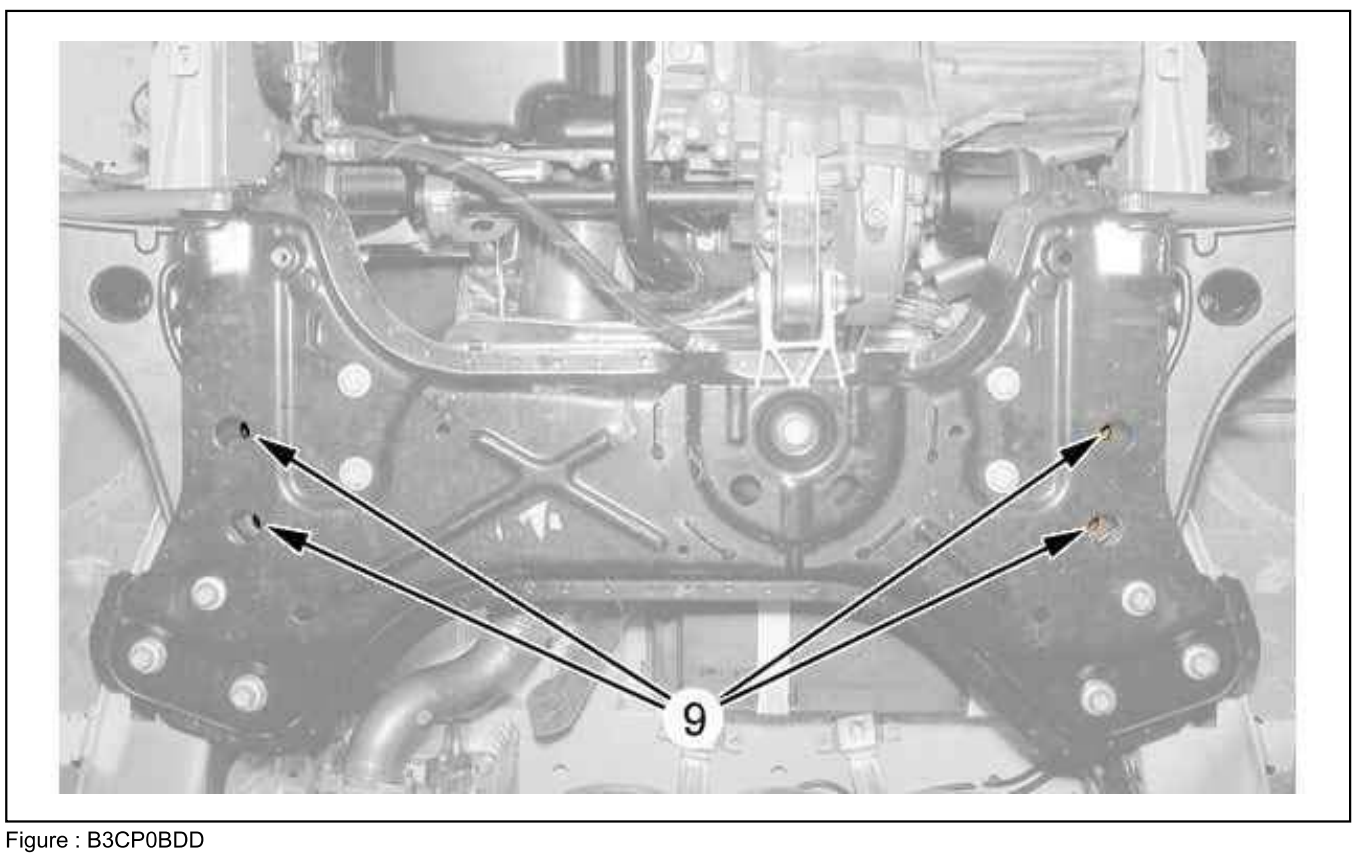

Figure : B3CP0BDD

Remove the bolts (9) (on each side).

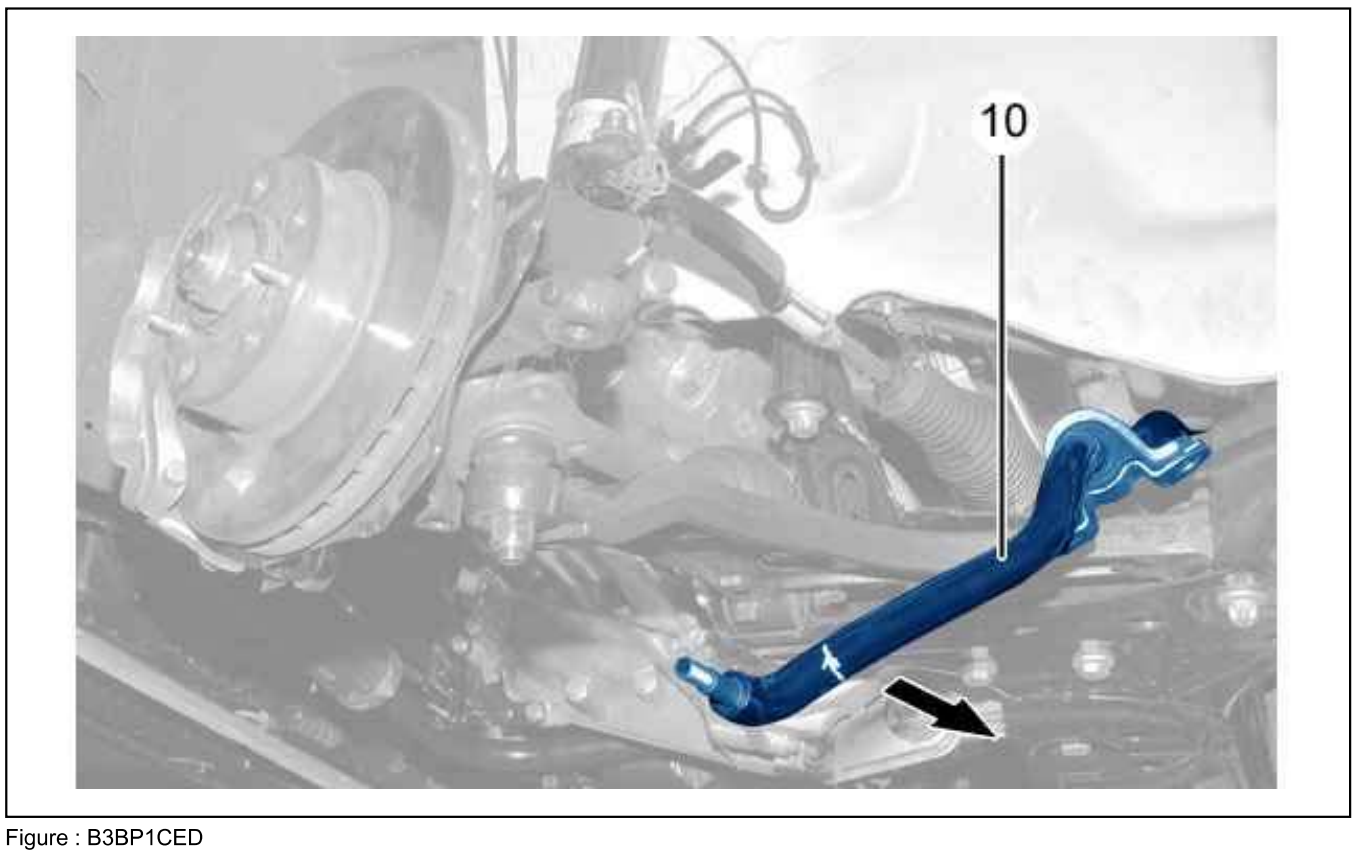

Figure : B3BP1CED

Attach the steering rod to the hub carrier .
Remove the front anti-roll bar (10) from the left-hand side with a downward rotation (following the arrow).

3. Refitting

N.B. : Always fit new Nylstop nuts.

Refit (on each side) :

- The front anti-roll bar (10)
- The bolts (9) ; Tighten to 5 ± 1,3 daN.m
- The connecting rod (8)
- The silentblock (7)
- The washer (6)
- The nuts (5), (3)

Position the hub carrier lower ball joint.
Refit the bolts (4) ; Tighten to 11,5 ± 0,4 daN.m.
Couple up the steering ball-joint (2).
Refit the nut (1) ; Tighten to 8 ± 0,7 daN.m.
Fit the wheel.
Return the vehicle to its wheels.
Tighten (on each side) :

- The nut (3) to 5,6 ± 0,5 daN.m
- The nut (5) to 5,6 ± 0,5 daN.m

Tighten the wheel bolts .
Reconnect the battery.

REMOVING - REFITTING : REAR DAMPER

1. Removing

Raise and support the vehicle, with the rear wheels hanging free.



Figure : B3BP1CJD

Remove bolts (1).

N.B. : To facilitate screw (1) removal or refitting, the strain on the axle should be relieved by means of a jack or a hydraulic post type hoist.

Remove :

- The (2) bolt
- The damper (3)

2. Refitting

Refit :

- The damper (3)
- The bolts (2), (1) (without tightening)

Return the vehicle to its wheels.
Place the vehicle at its reference ride height (see the relevant operation).

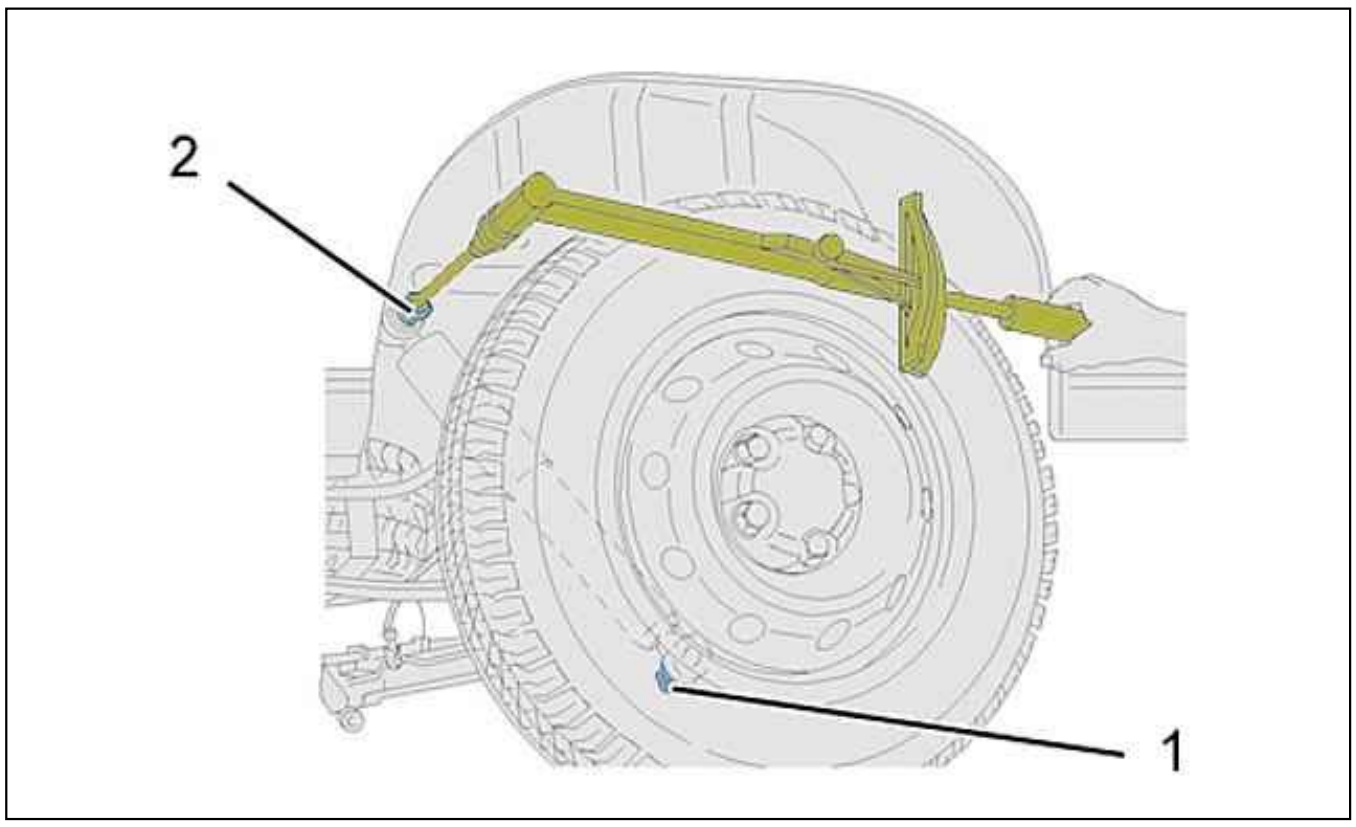

Figure : B3BP1CKD

Tighten :

- Screw (1) to 14,5 ± 1,2 daNm
- Screw (2) to 14,5 ± 1,2 daNm

REMOVING - REFITTING : SUSPENSION BLADE

1. Removing

Remove the rear suspension (see the relevant operation).

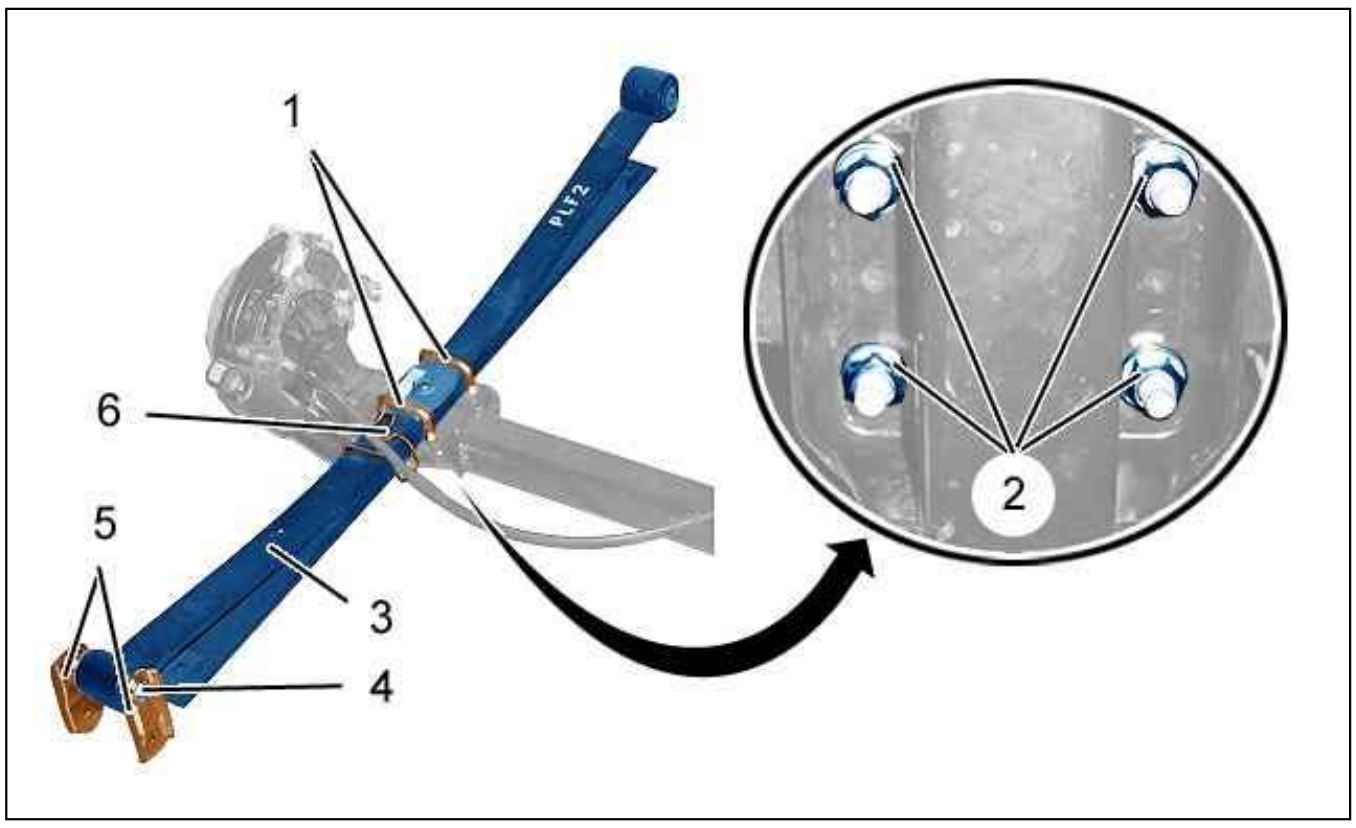

Figure : B3BP1CLD

Uncouple the handbrake cable from the cable guide (6).
Remove :

- The (4) bolt
- The rods (5)
- The cable guide (6)
- The nuts (2)
- The clamps (1)
- The suspension blade (3)

2. Refitting

CAUTION : Always fit new Nylstop nuts.

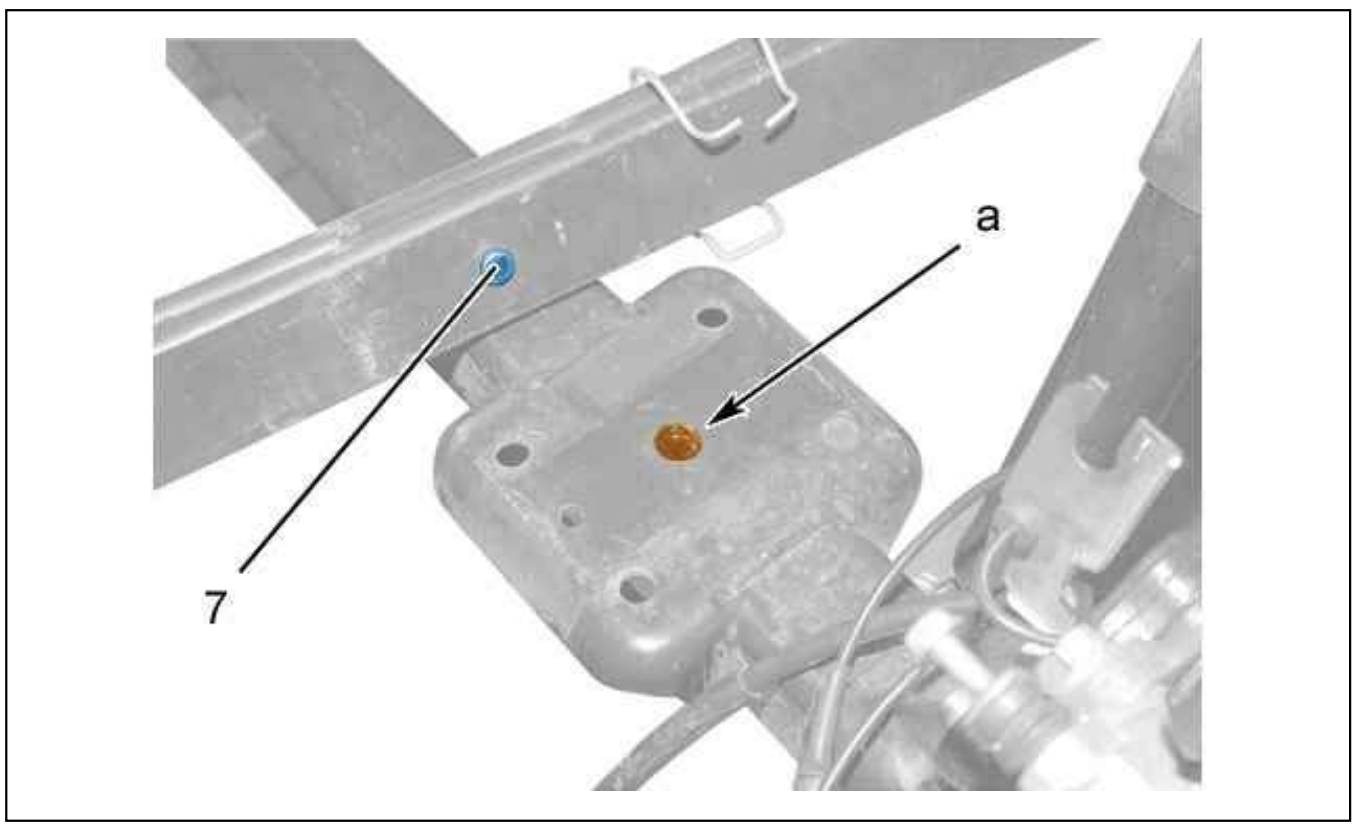

Figure : B3BP1CMD

Locate suspension blade (3).

N.B. : Ensure that the centring pin (7) is positioned in the location " a ".

Refit :

- The clamps (1)
- The nuts (2) ; Tighten to 13 ± 3,9 daN.m
- The rods (5)
- The (4) bolt
- The cable guide (6)

Couple the handbrake cable to the cable guide (6).

Refit the rear axle (see the relevant operation).

REMOVING - REFITTING : FRONT SUSPENSION LEG

ESSENTIAL : Observe the safety and cleanliness recommendations.

1. Recommended tools

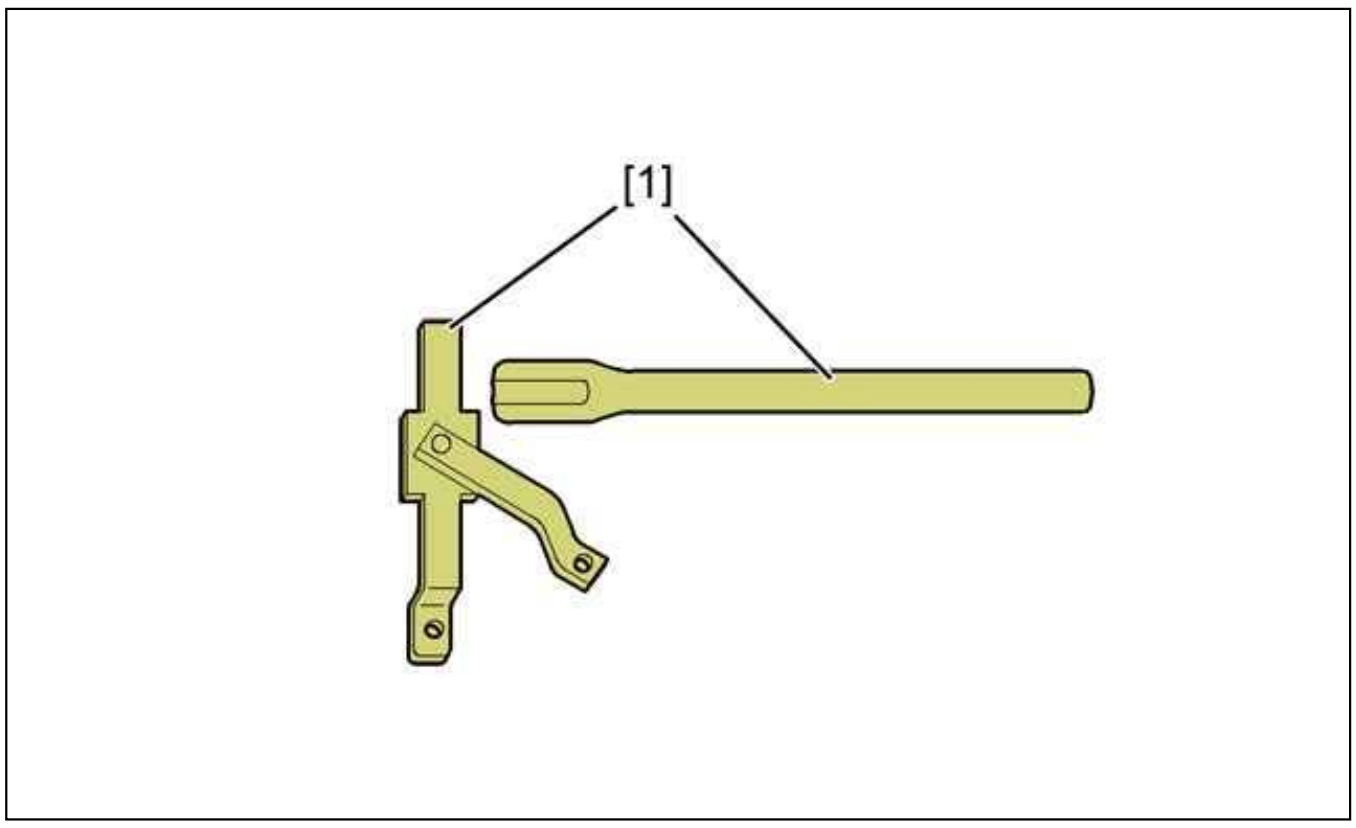

Figure : E5AP2Y3D

Reference	Designation	Reference	Reference
[1]	hub immobilising tool	6310-T	(-).0606-AY

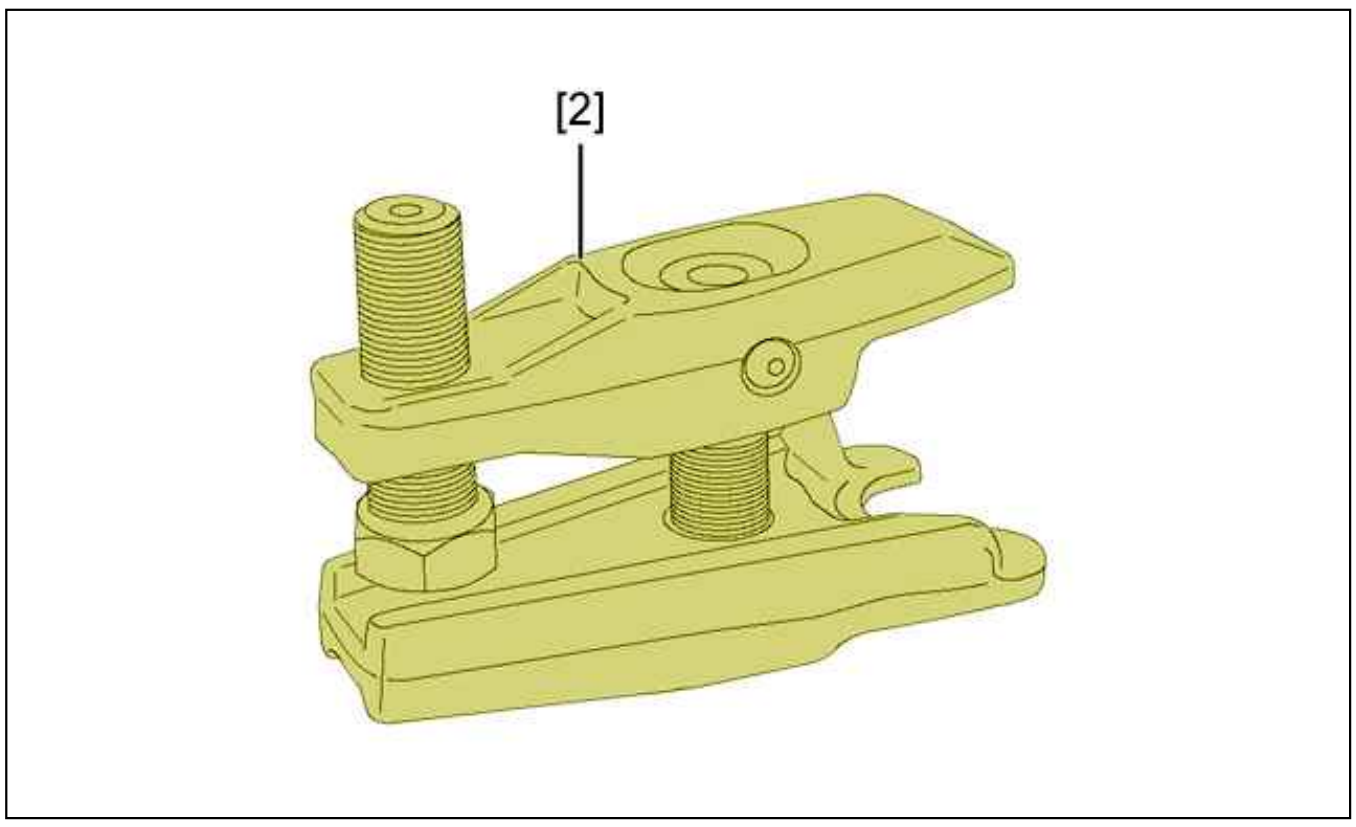

Figure : E5AP2Y4D

Reference	Designation	Reference	Reference
[2]	ball-joint extractor	5707-T	(-).0919

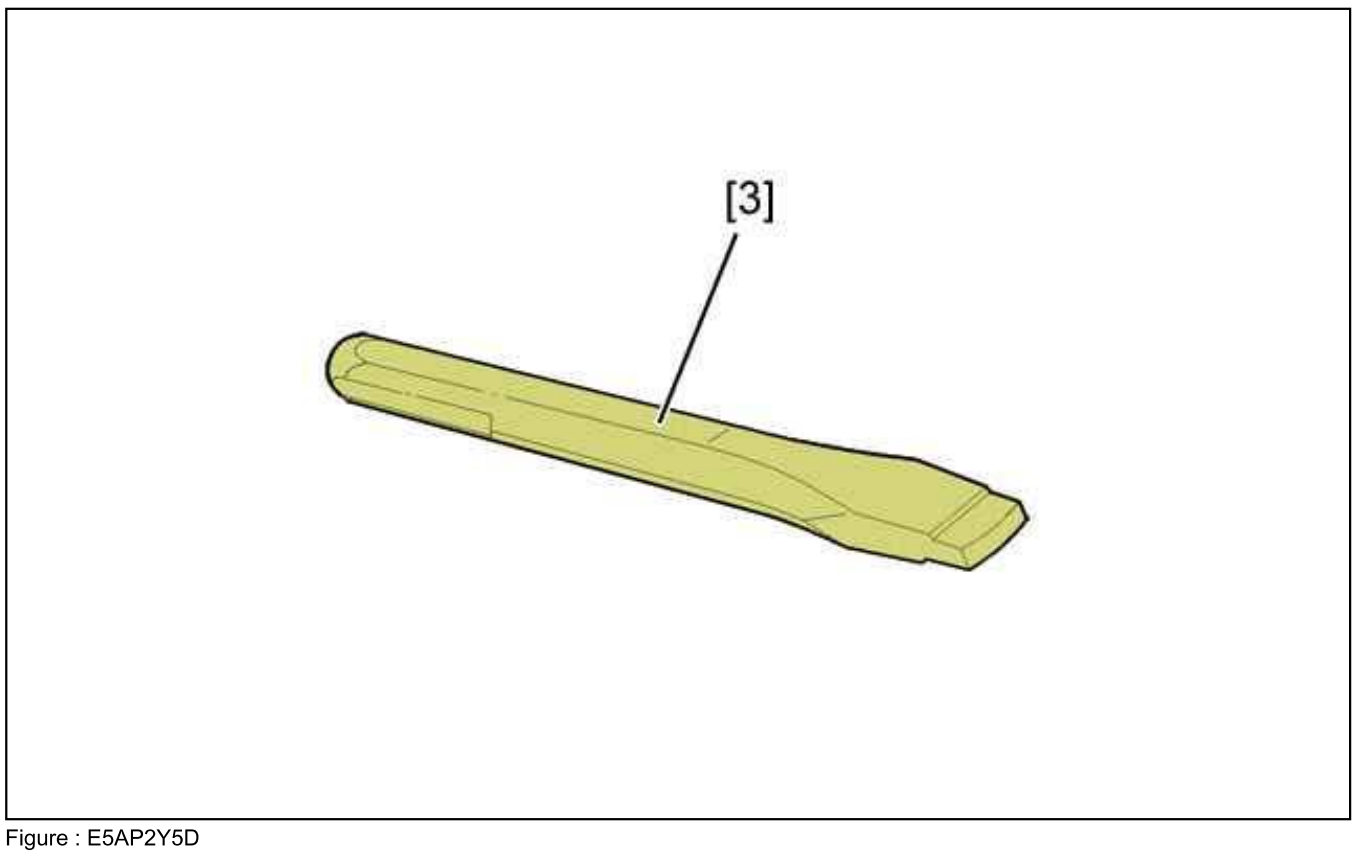

Figure : E5AP2Y5D

Reference	Designation	Reference	Reference
[3]	locking punch	5709-T.E	(-).0619-E

2. Removing

Release the front wheel bolts.
Lift and support the vehicle with front wheels suspended.
Remove the front wheels.

2.1. On the left-hand side



Figure : C5FP0YPD

Remove the lower lining (1) (see the relevant operation).

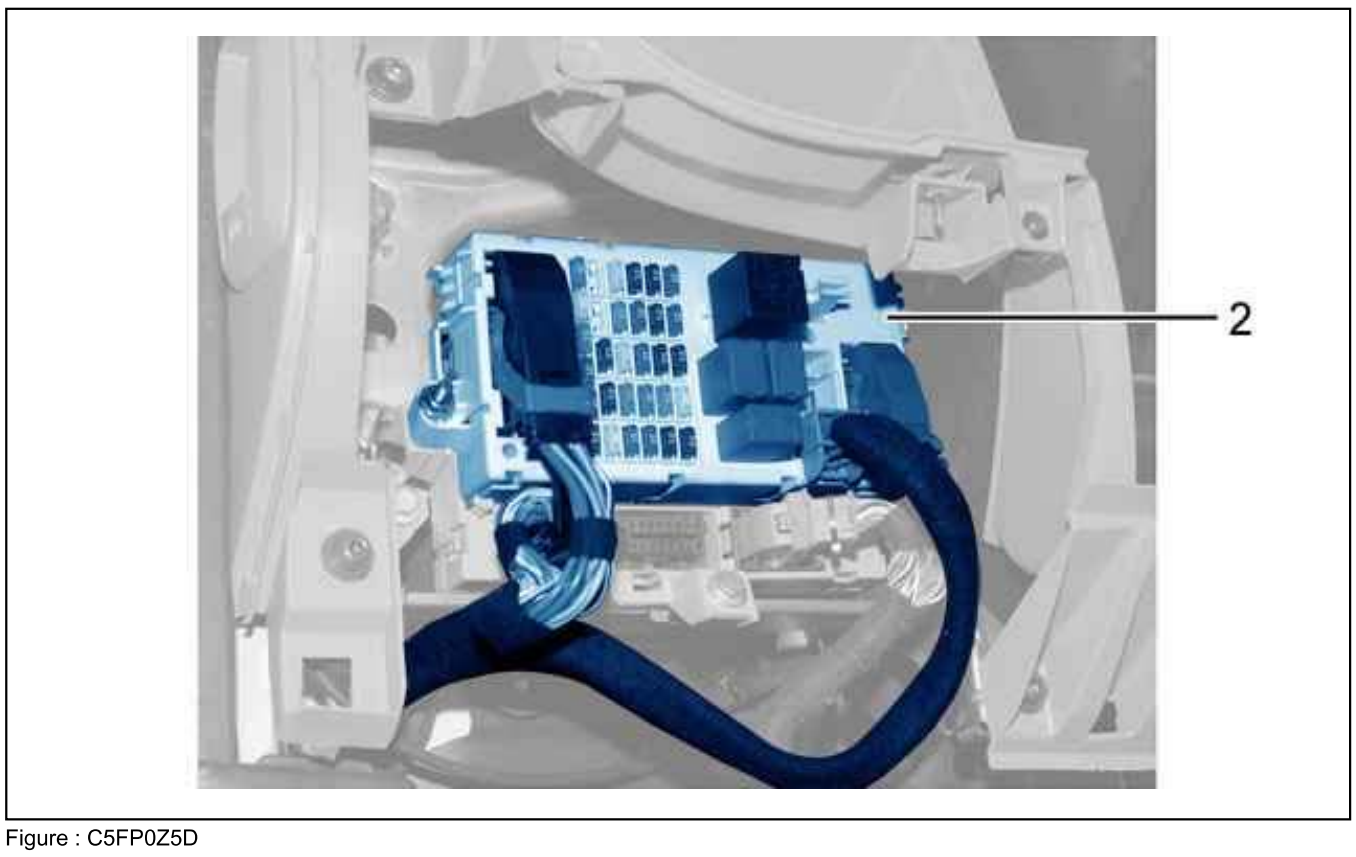

Figure : C5FP0Z5D

Remove the built-in systems interface (2) (see the relevant operation).

2.2. On the right-hand side

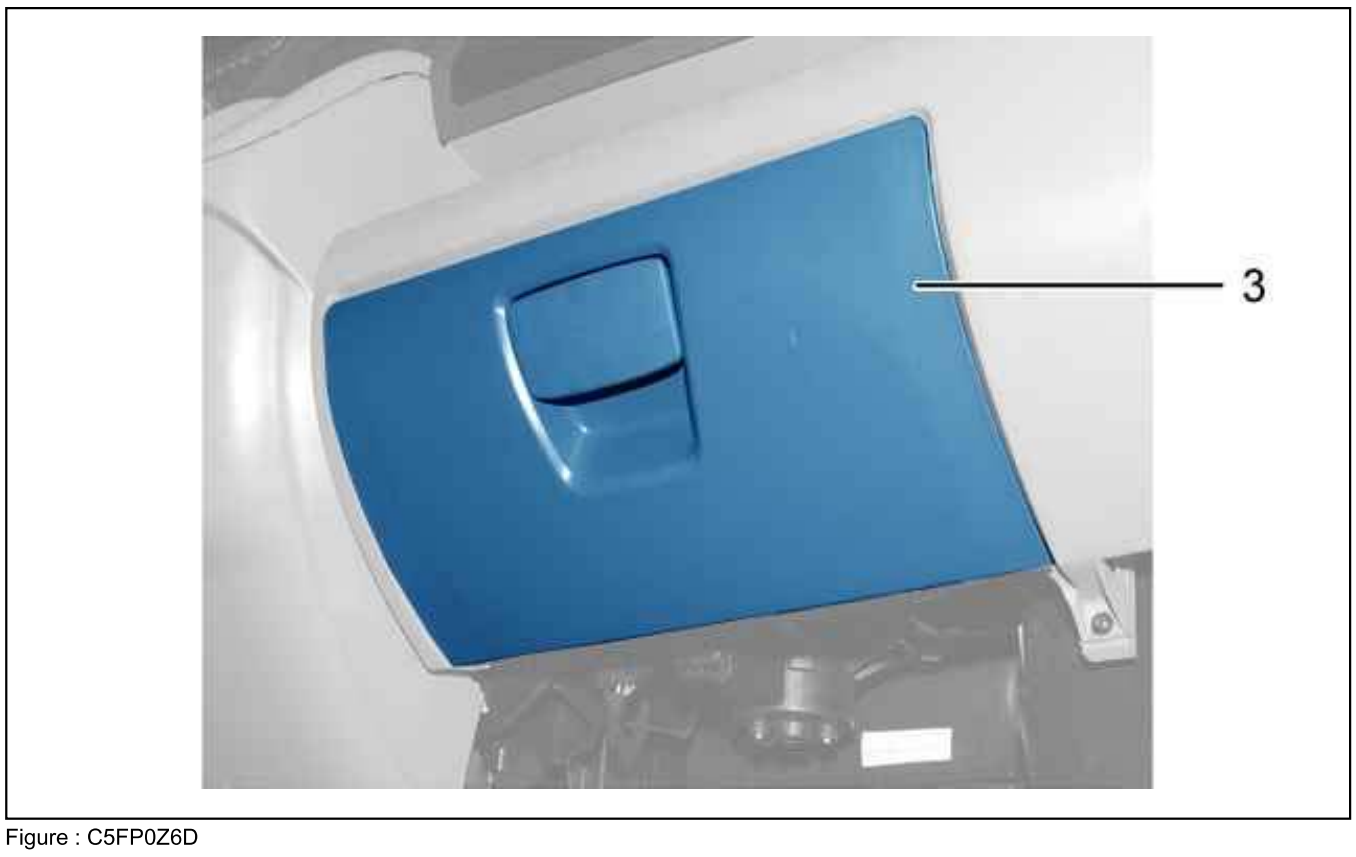

Figure : C5FP0Z6D

Remove The lower right-hand glove box (3) (see the relevant operation).

2.3. Common operations

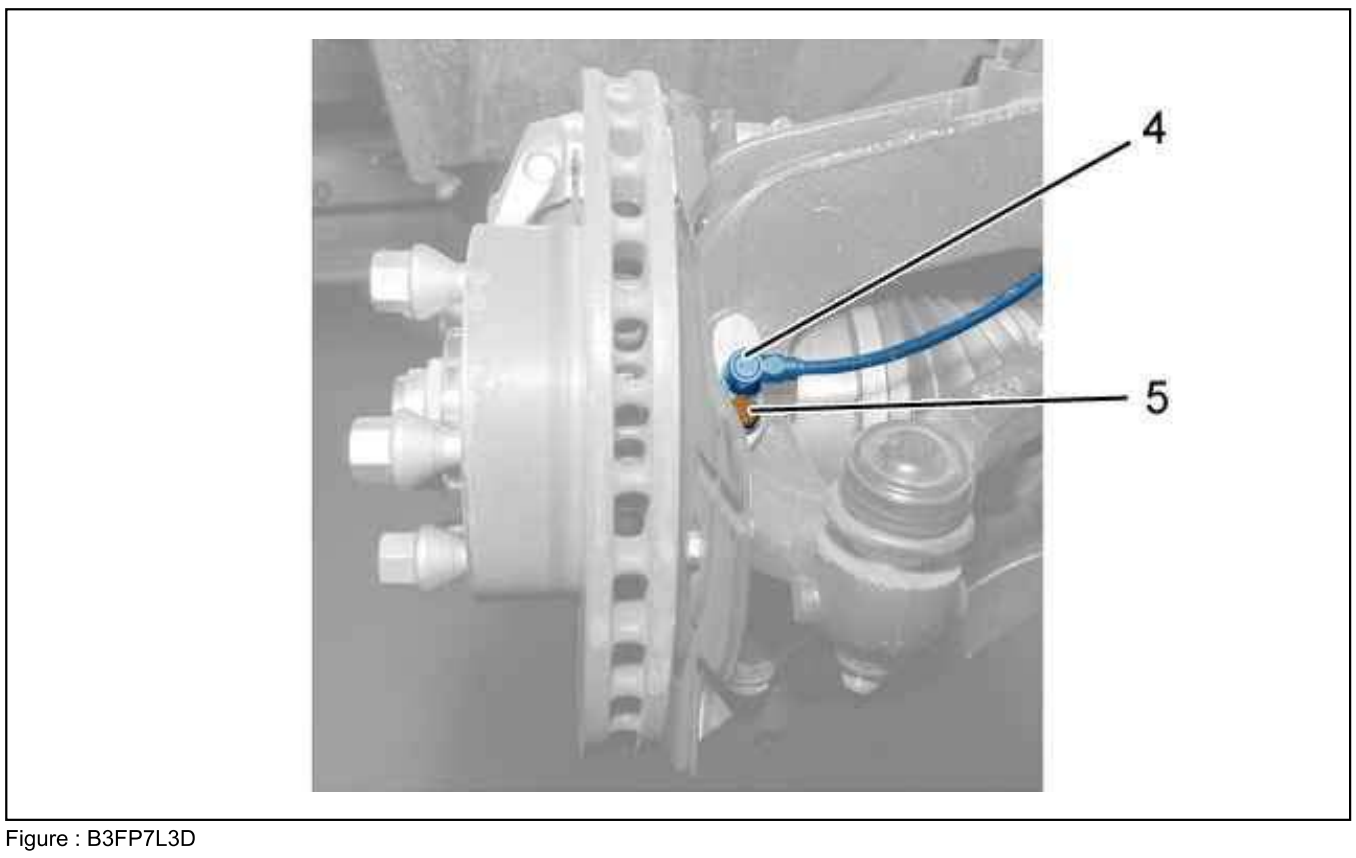

Figure : B3FP7L3D

Remove bolts (5).
Disengage the front wheel sensor (4).
Suspend the front wheel sensor (4).

Remove the brake pads (see the relevant operation).

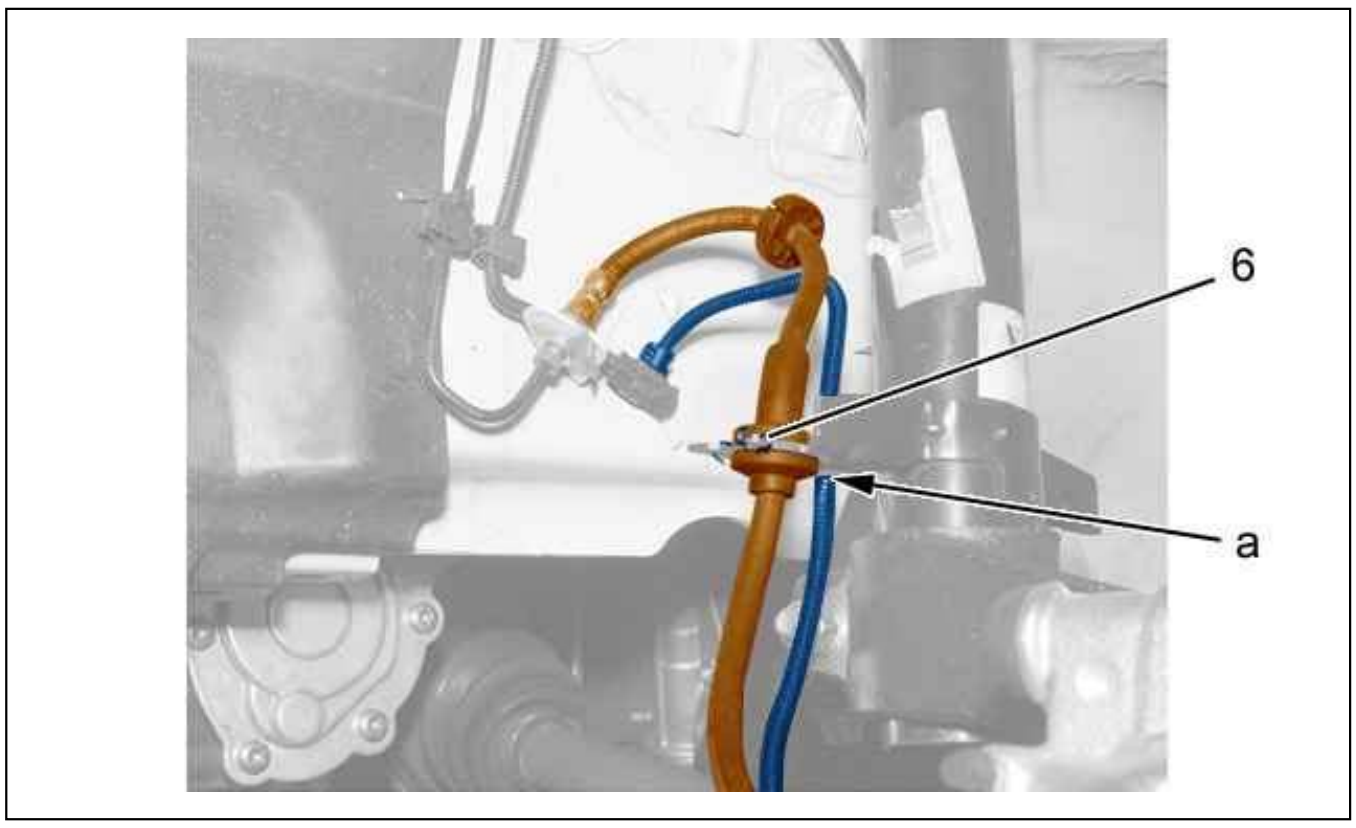

Figure : B3BP1CQD

Remove the clip (6).
Move aside the hose union from its support.
Unclip the electrical harness (at "a").

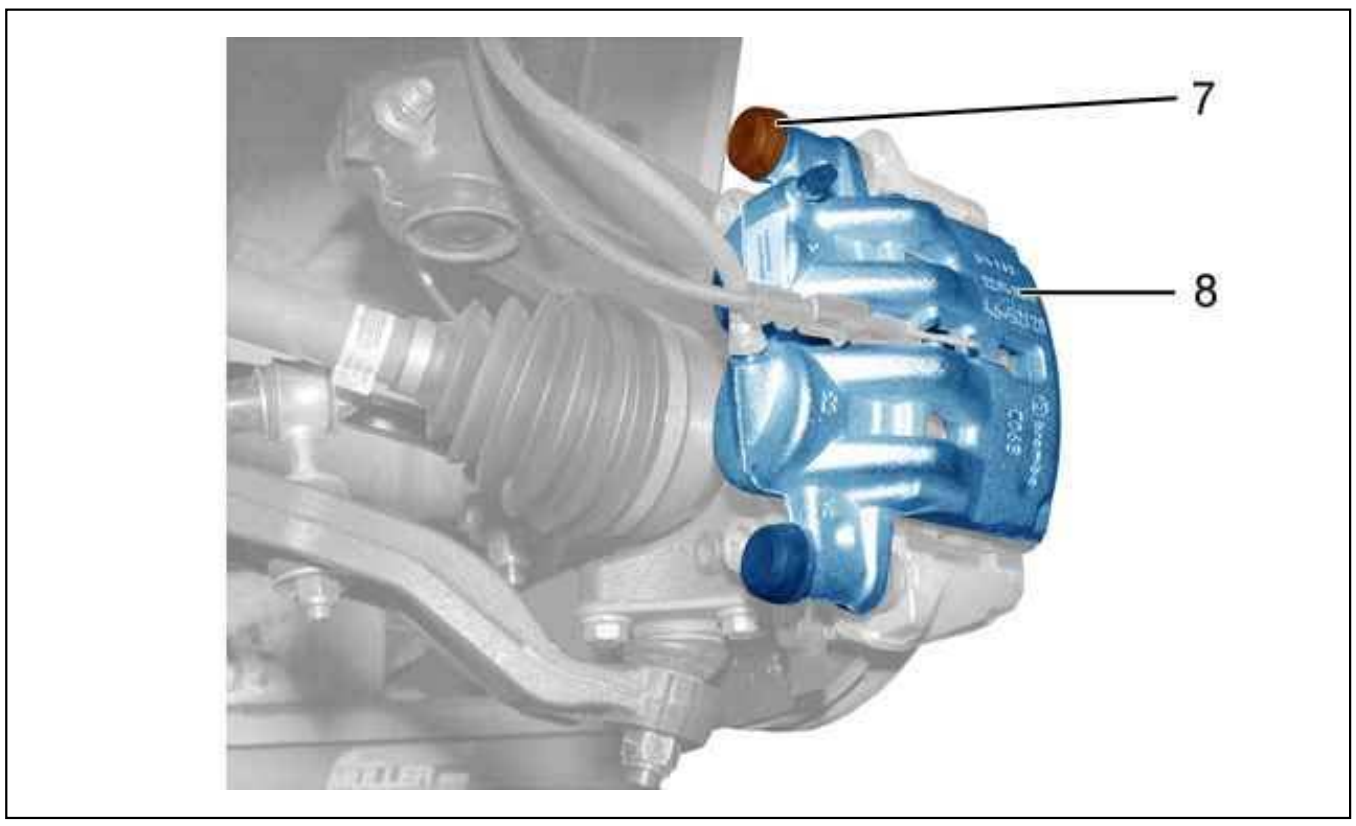

Figure : B3FP7L4D

Remove :

- The (7) bolt
- The brake caliper (8)

Leave the caliper hanging.
Unlock the transmission nut .

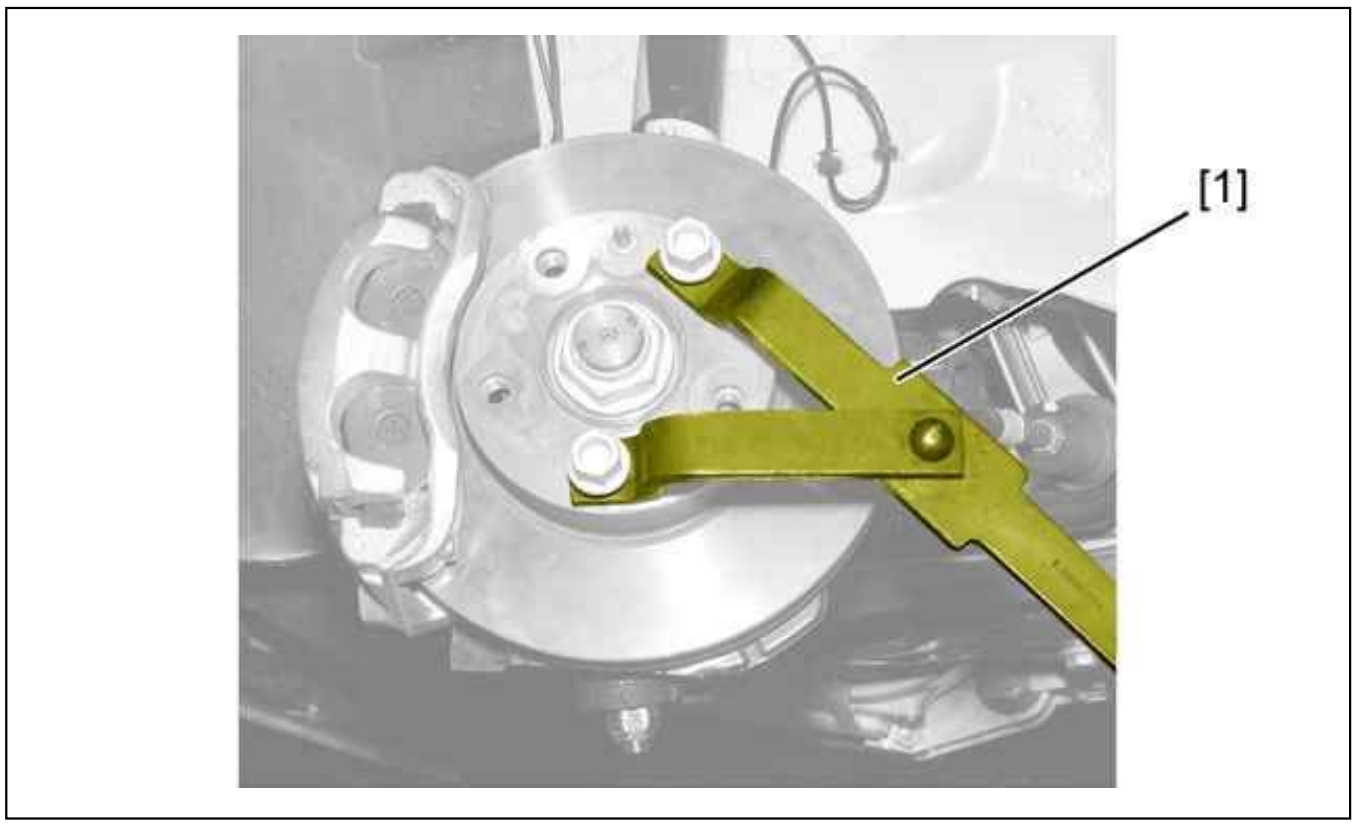

Figure : B3FP7L5D

Immobilise the hub from rotation using tool [1].
Remove :

- The drive shaft nut
- The tool [1]

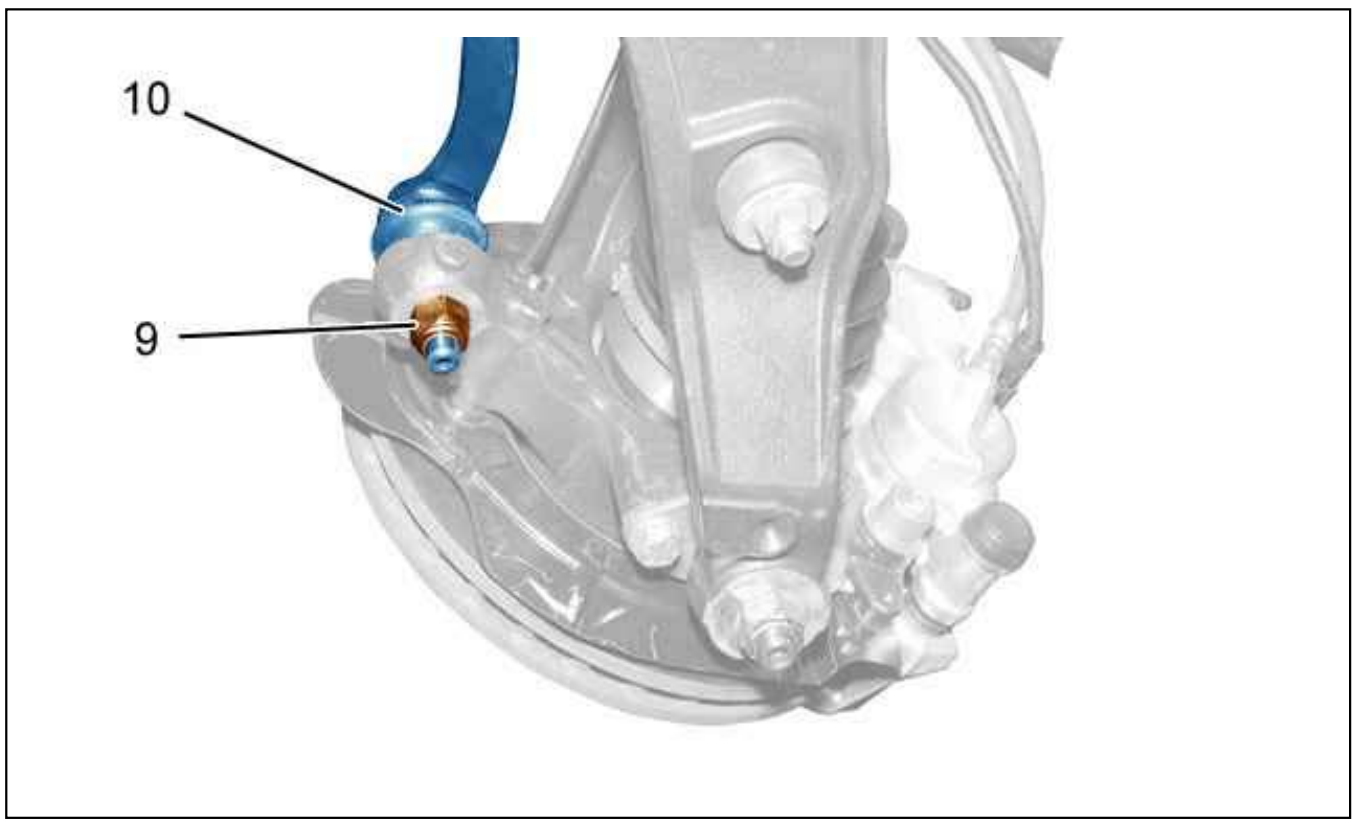

Figure : B3FP7L6D

Remove the nut (9).
Uncouple the steering ball-joint (10) ; Using tool [2].

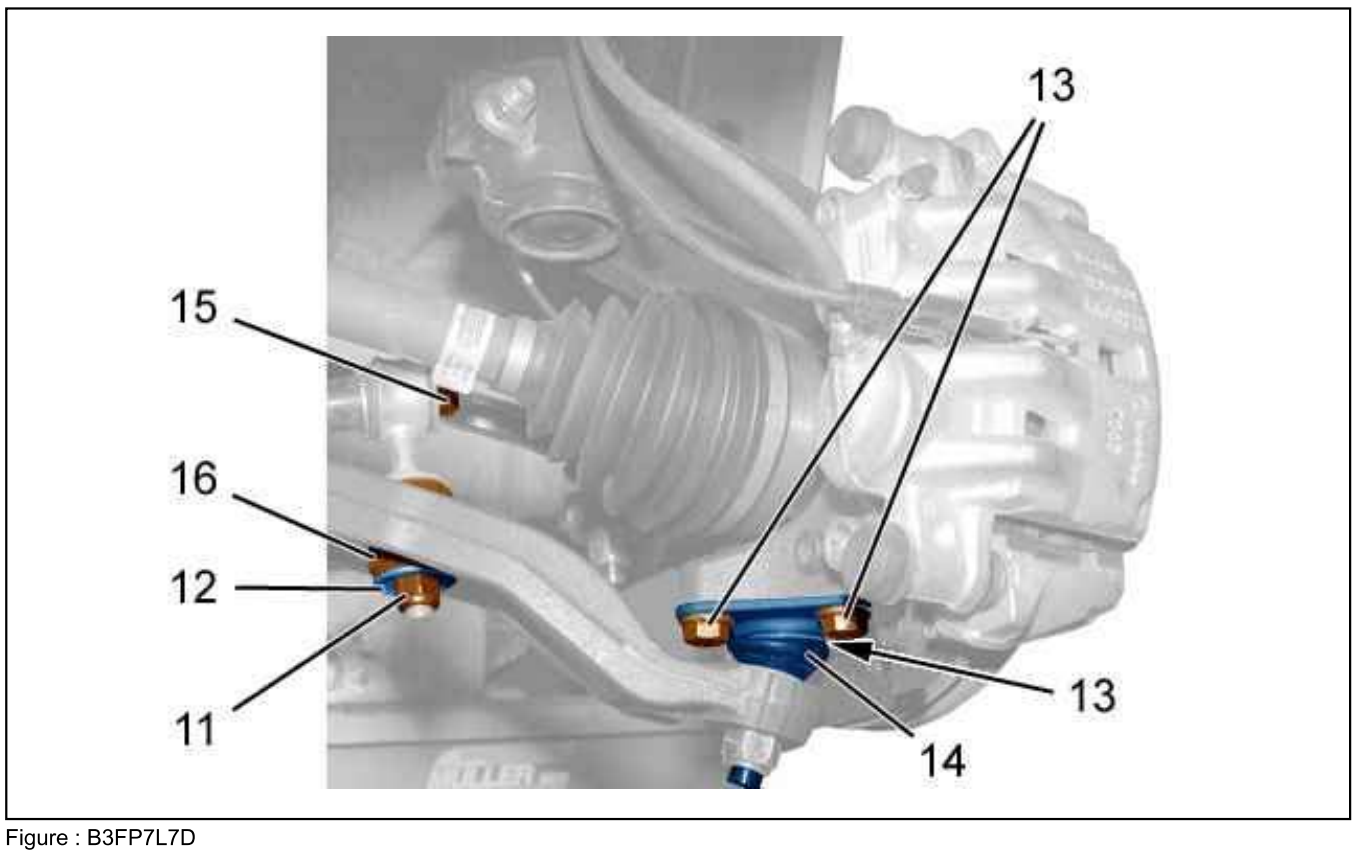

Figure : B3FP7L7D

Remove :

- The nut (11)

- The washer (12)
- The silentblock (16)

Unscrew nut (15).
Remove the 3 bolts (13).
Move aside the ball-joint housing (14).
Detach the drive shaft from the hub.

CAUTION : Keep the transmission in position.

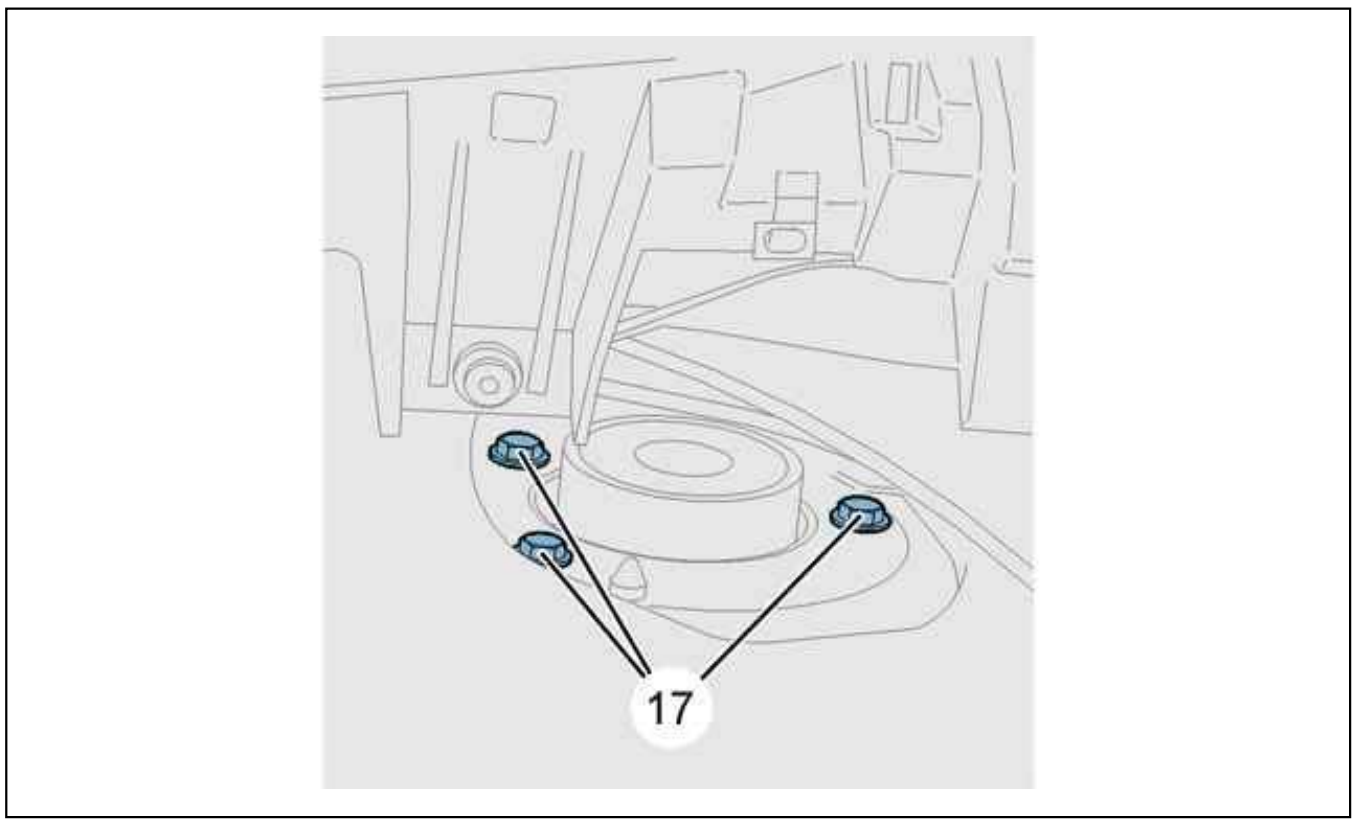

Figure : B3BP1CRD

Remove :

- The bolts (17)
- The suspension unit

3. Refitting

Insert the suspension strut into the wheel arch.
Refit the bolts (17) ; Tighten to 6 ± 2,3 daN.m.
Position the ball-joint housing (14).
Refit the bolts (13) ; Tighten to 11,5 ± 0,4 daN.m.
Refit :

- The silentblock (16)
- The washer (12)
- The nut (11)

Couple up the steering ball-joint (10).
Refit the nut (9) ; Tighten to 8 ± 0,7 daN.m.
Refit The drive shaft nut .
Immobilise the hub from rotation using tool [1].
Tighten the driveshaft nut to 47,5 ± 4,75 m.daN.
Remove the tool [1].

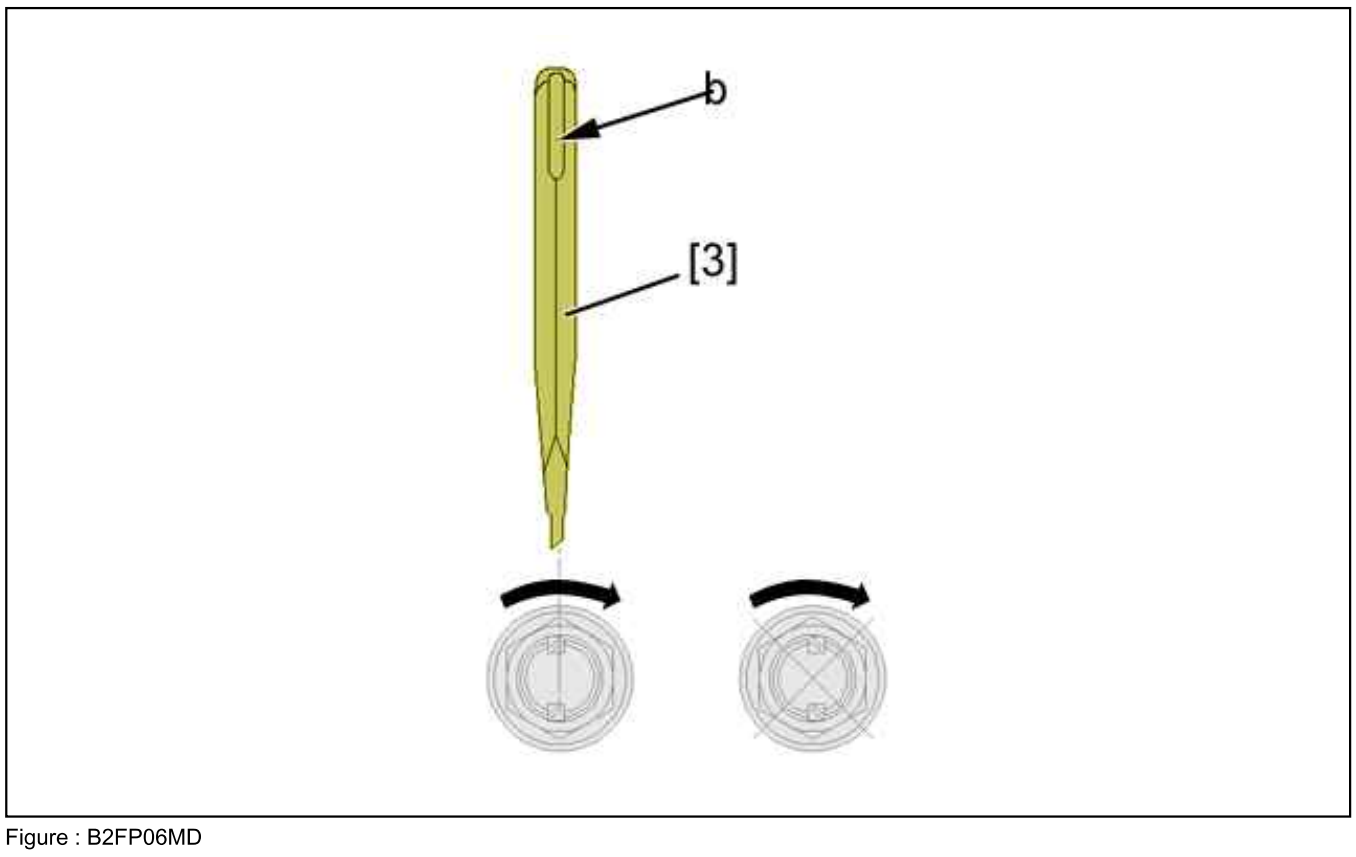

Figure : B2FP06MD

Lock each drive shaft nut with the help of tool [3].

N.B. : The flat part "b" of the tool should always face outwards.

CAUTION : The nut collar must be locked in the opposite direction to tightening.

Refit :

- The brake caliper (8)
- The new bolt (7) Pre-coated with a thread-locking product ; Tighten to 3,4 ± 0,2 daN.m

Reposition and reconnect :

- The electrical harness (at "a")
- The brake hose
- The clip (6)

Refit :

- The brake pads (see the relevant operation)
- The front wheel sensor (4) (see the relevant operation)
- The (5) bolt ; Tighten to 0,8 ± 0,3 daN.m

3.1. On the left-hand side

Refit The bottom trim (1) (see the relevant operation).
Refit the built-in systems interface (2) (see the relevant operation).

3.2. On the right-hand side

Refit the lower right-hand glove box (3) (see the relevant operation).

3.3. Common operations

Fit the wheels.
Return the vehicle to its wheels.
Tighten :

- The nut (11) to 5,6 ± 0,5 daN.m
- The nut (15) to 5,6 ± 0,5 daN.m

Tighten the wheel bolts .

DISMANTLING - RE-ASSEMBLY : FRONT DAMPER - SPRING ASSEMBLY (ON THE WORK BENCH)

ESSENTIAL : Observe the safety and cleanliness recommendations .

1. Tooling

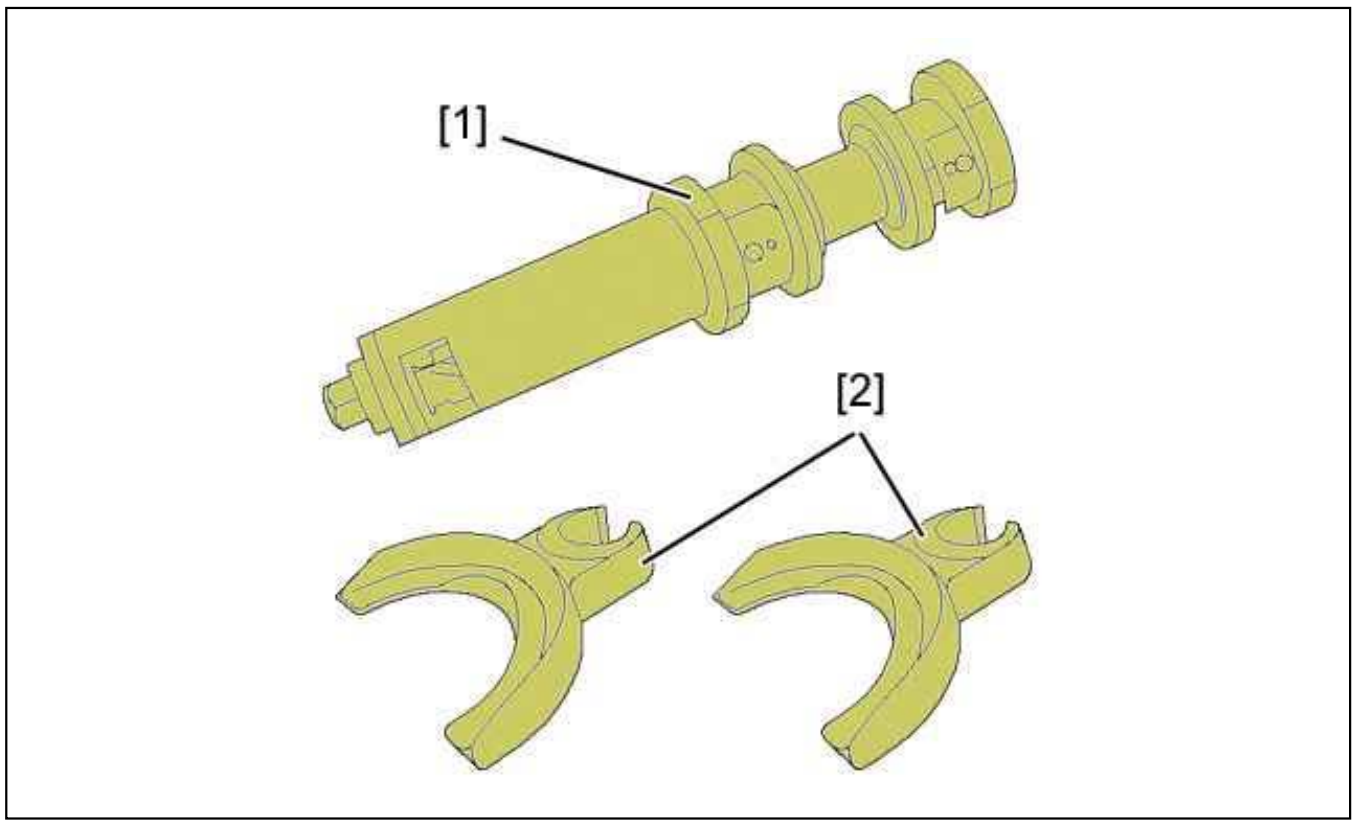

Figure : E5AP34QD

Reference	Designation	Reference	Reference
[1]	compressor	4137-T.M90	MG M90
[2]	Jaws	4137-T.M3	MG M3

CAUTION : Check the presence and condition of the rubber protections on the fixed and sliding cups of the spring compressor.

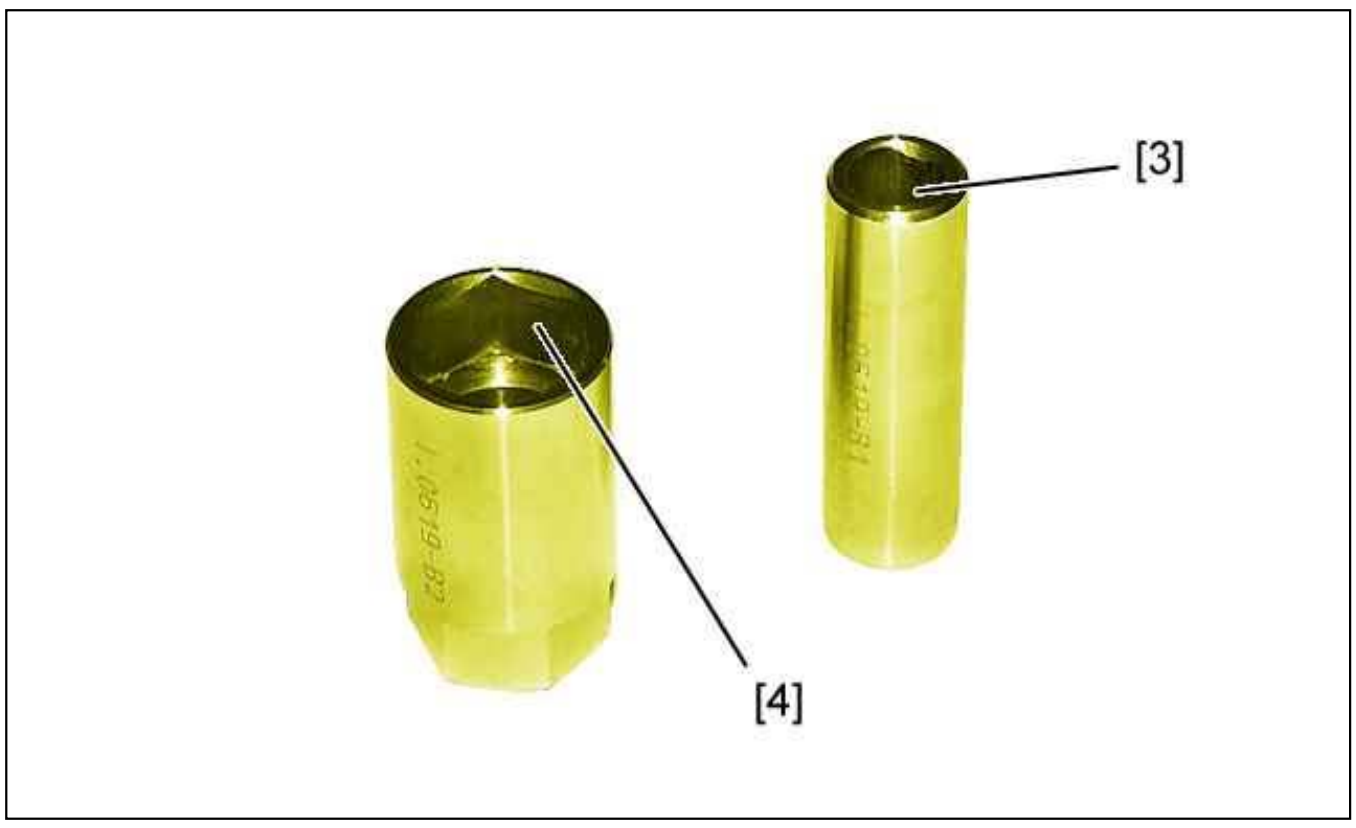

Figure : E5AP34RD

Reference	Designation	Reference	Reference
[3]	Damper rod retaining socket	5709-T.S1	(-).0619 S1
[4]	Socket for damper nut	5709-T.S2	(-).0619 S2

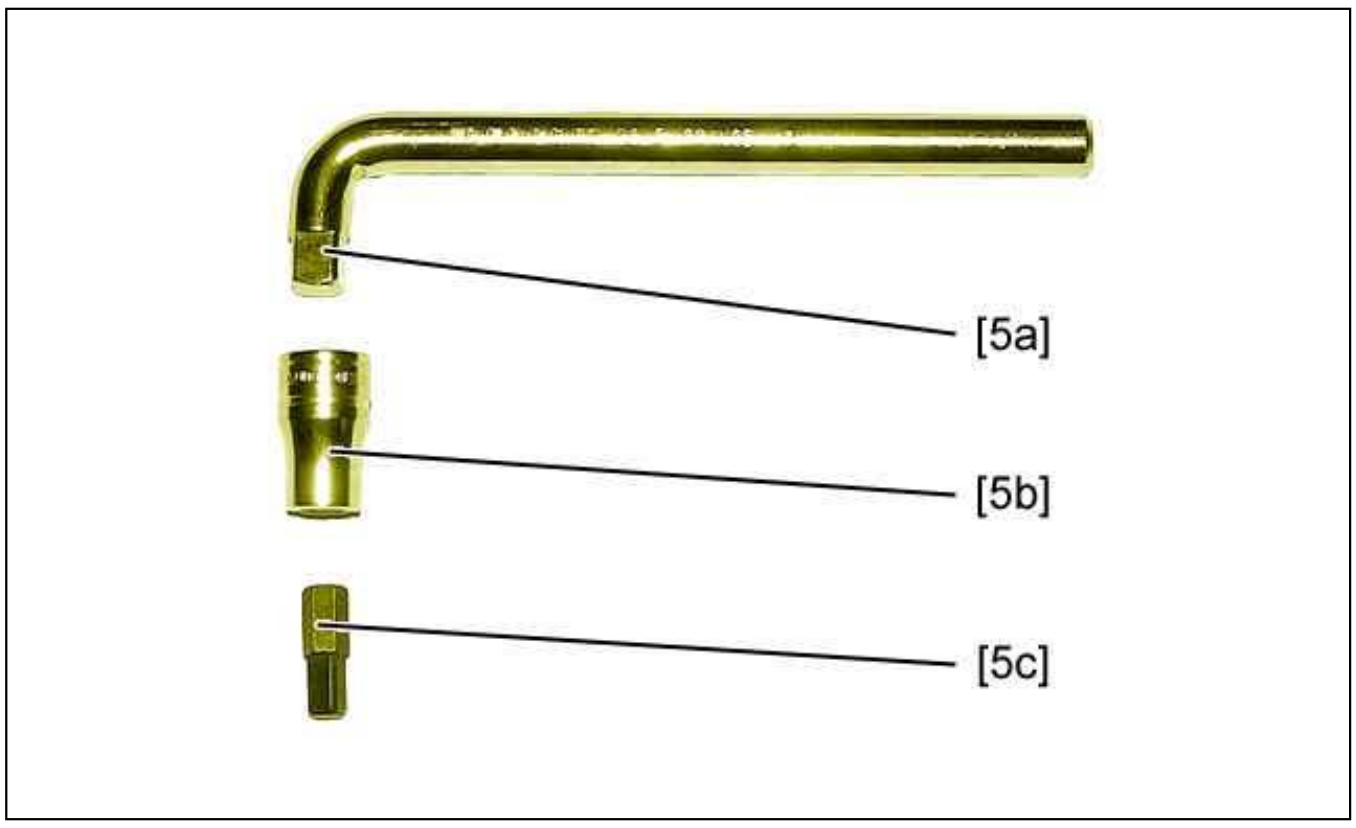

Figure : E5AP34SD

Reference	Designation	Reference	Reference
[5]	pivot spreading tool (Type FACOM DS) (DS.J5) kit	5709-T T	(-).0619 T
[5a]	Spanner Facom (type DS.P)	-	-
[5b]	socket Facom (type J.236)	-	-
[5c]	adaptor Facom (type DS.11A)	-	-

2. Removing

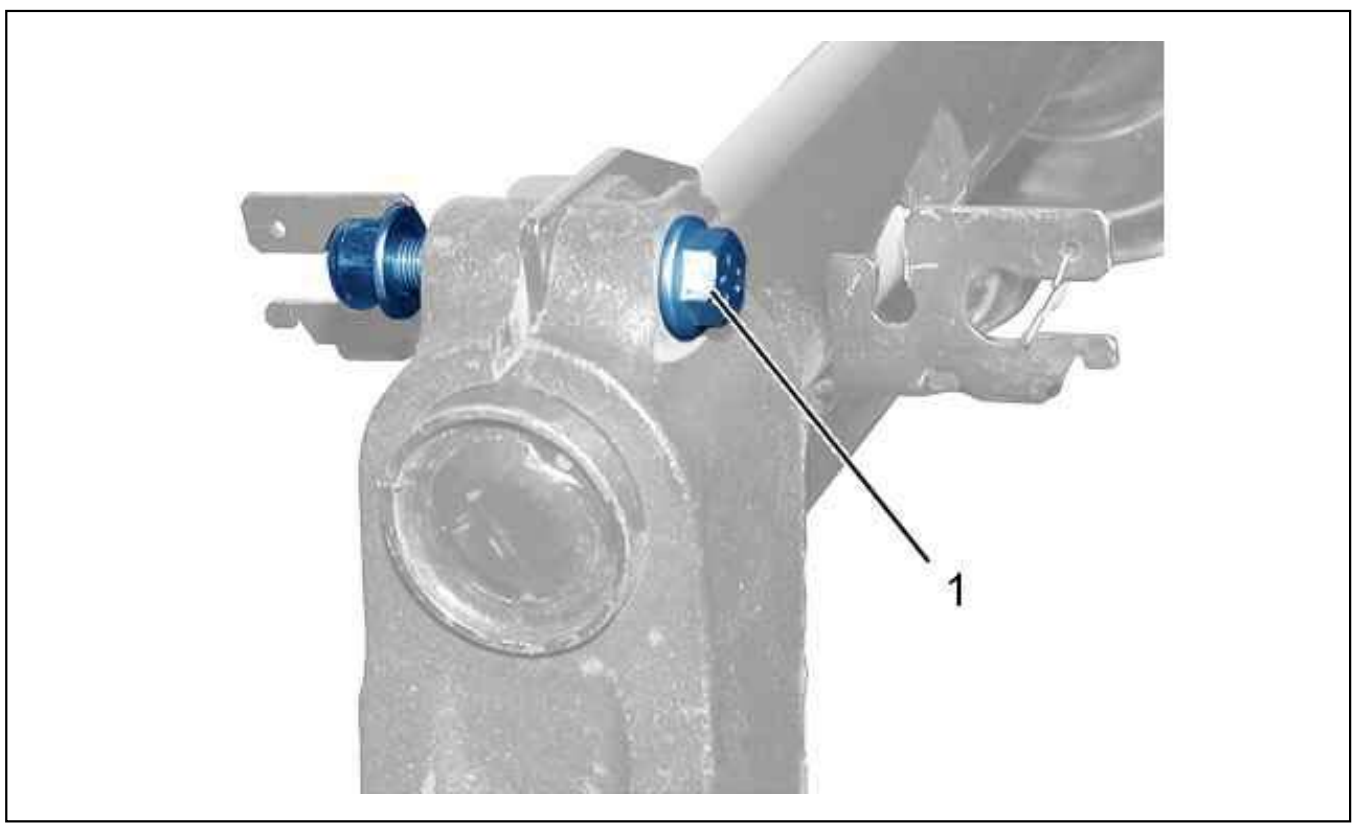

Figure : B3BP1D5D

Remove the bolt (1).

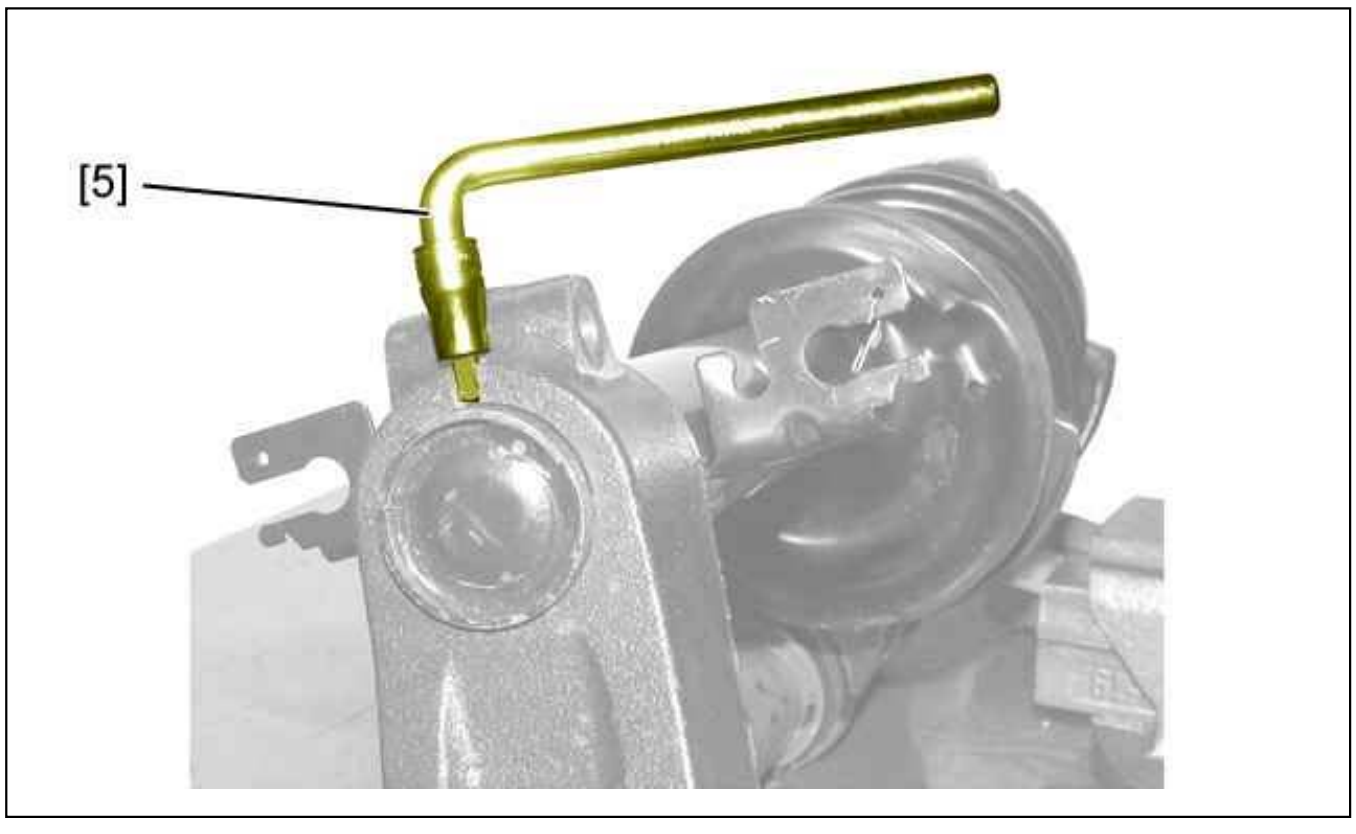

Figure : B3BP1D6D

Position the tool [5] in the front pivot opening .
Turn a quarter turn to open the pivot.
Uncouple the front pivot .
Remove the tool [5].

CAUTION : Do not put a suspension spring in direct contact with any metallic object or tool.

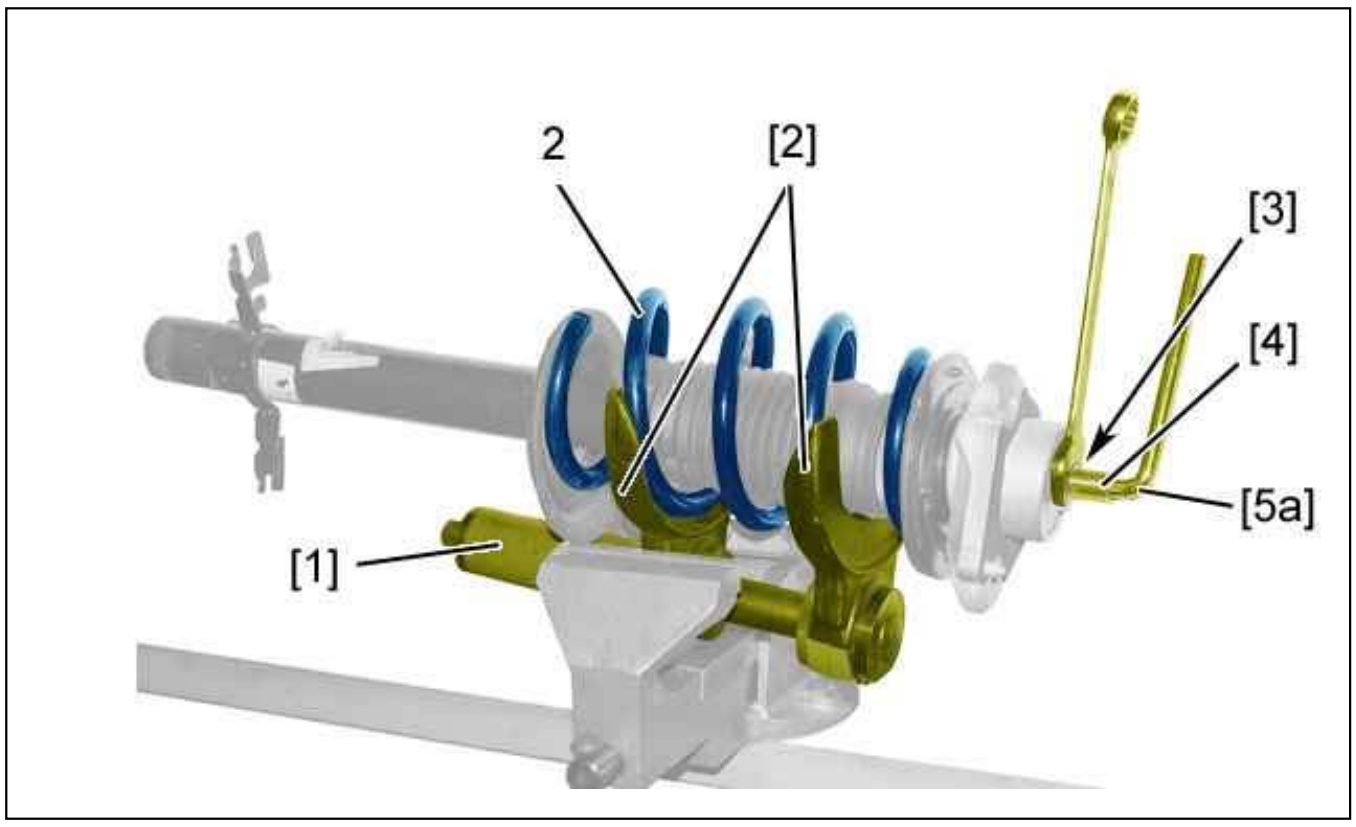

Figure : B3BP1D7D

Grip compressor [1] equipped with its claws [2] in a vice.
Tighten against the fixed claw.
Compress the spring (2) ; Using the tools [1], [2].
Slacken the damper rod nut ; Using the tools [3], [4], [5a].

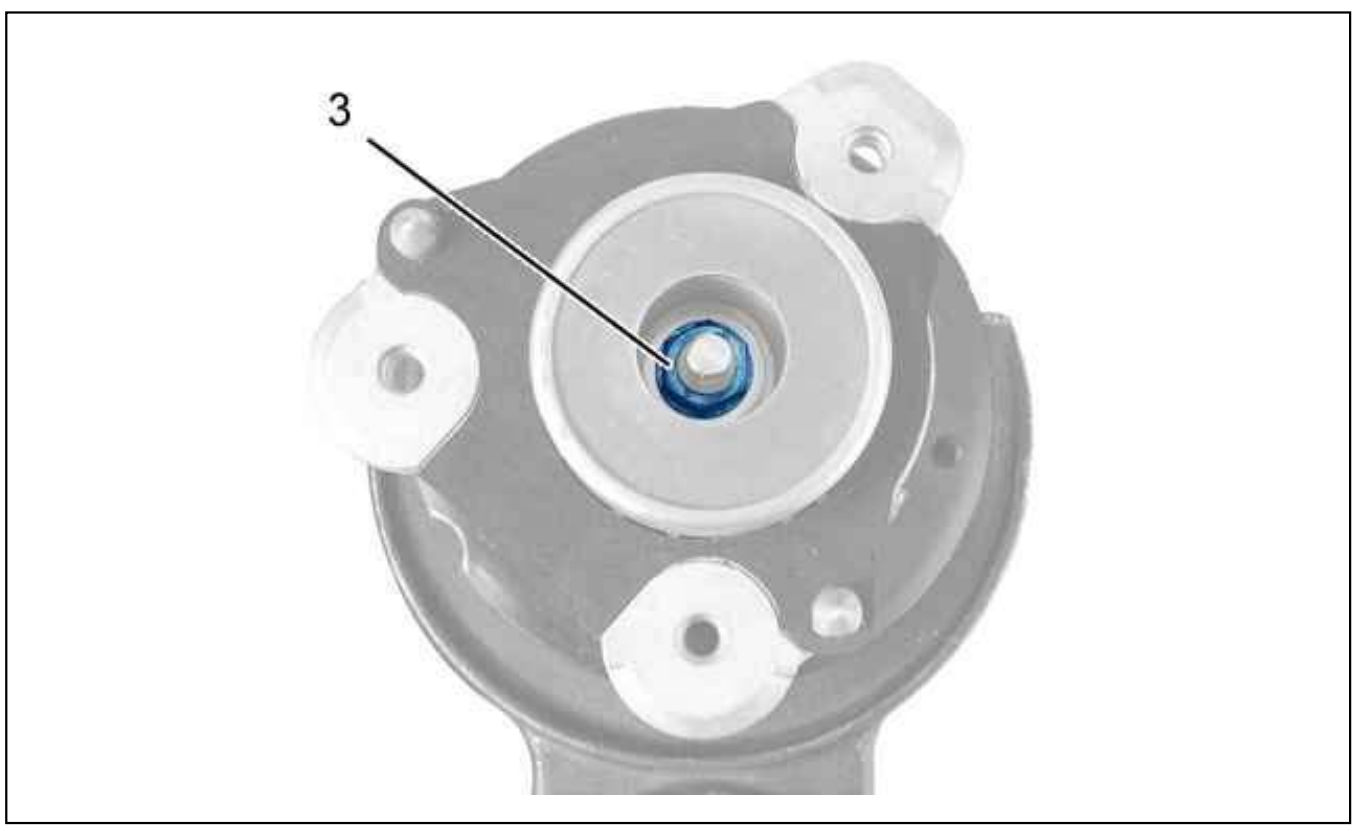

Figure : B3BP1D8D

Remove the nut (3) ; Using the tools [3], [4].

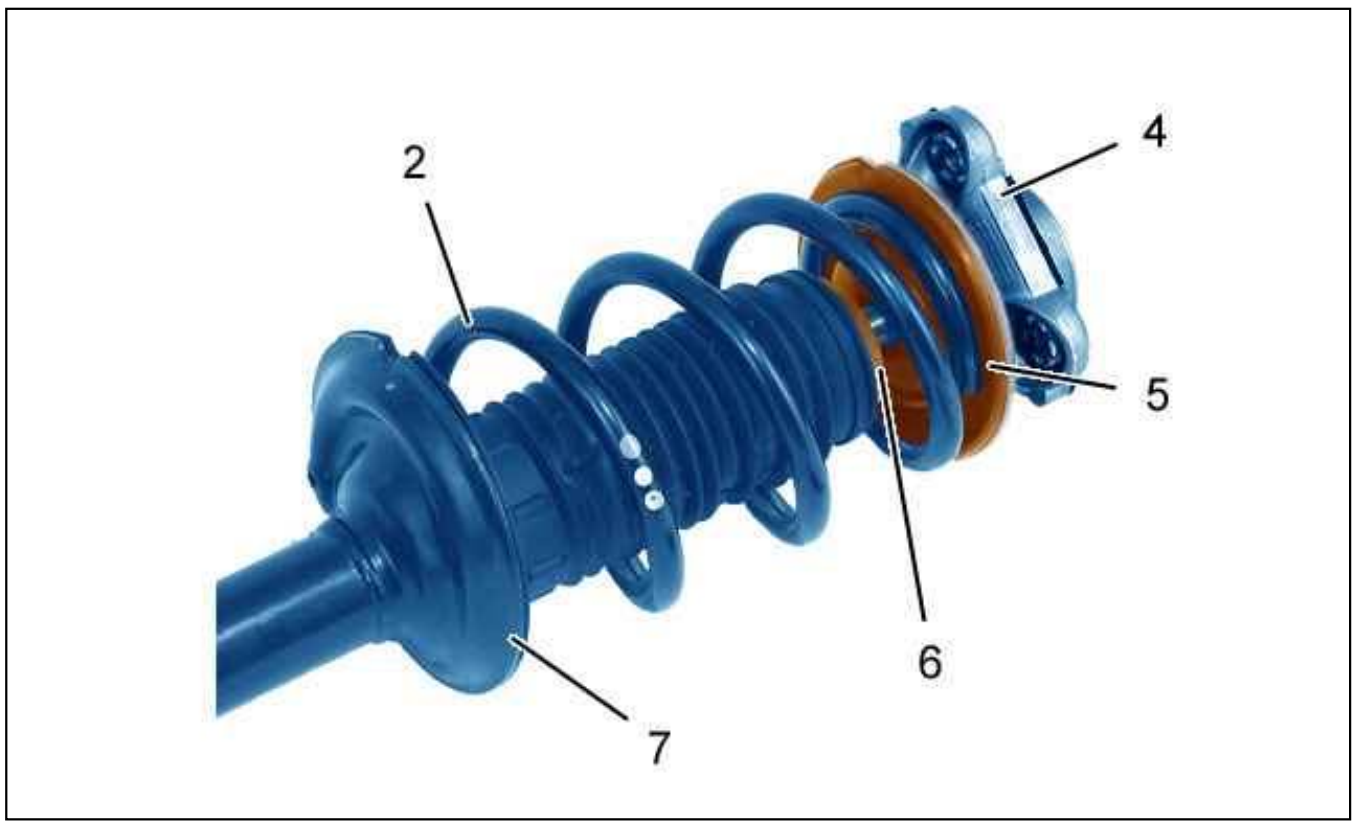

Figure : B3BP1D9D

Remove :

- The damper bracket (4)
- The thrust cup (5) fitted with its rubber protector
- Damper (7) provided with bump stop (6)

Release the spring (2) ; Using the tools [1], [2].

3. Refitting

CAUTION : Always fit new Nylstop nuts.

CAUTION : Apply water-repellent grease to the ball stop (8) (index G1).

Grip compressor [1] equipped with its claws [2] in a vice.
Tighten against the fixed claw.
Compress the spring (2) ; Using the tools [1], [2].

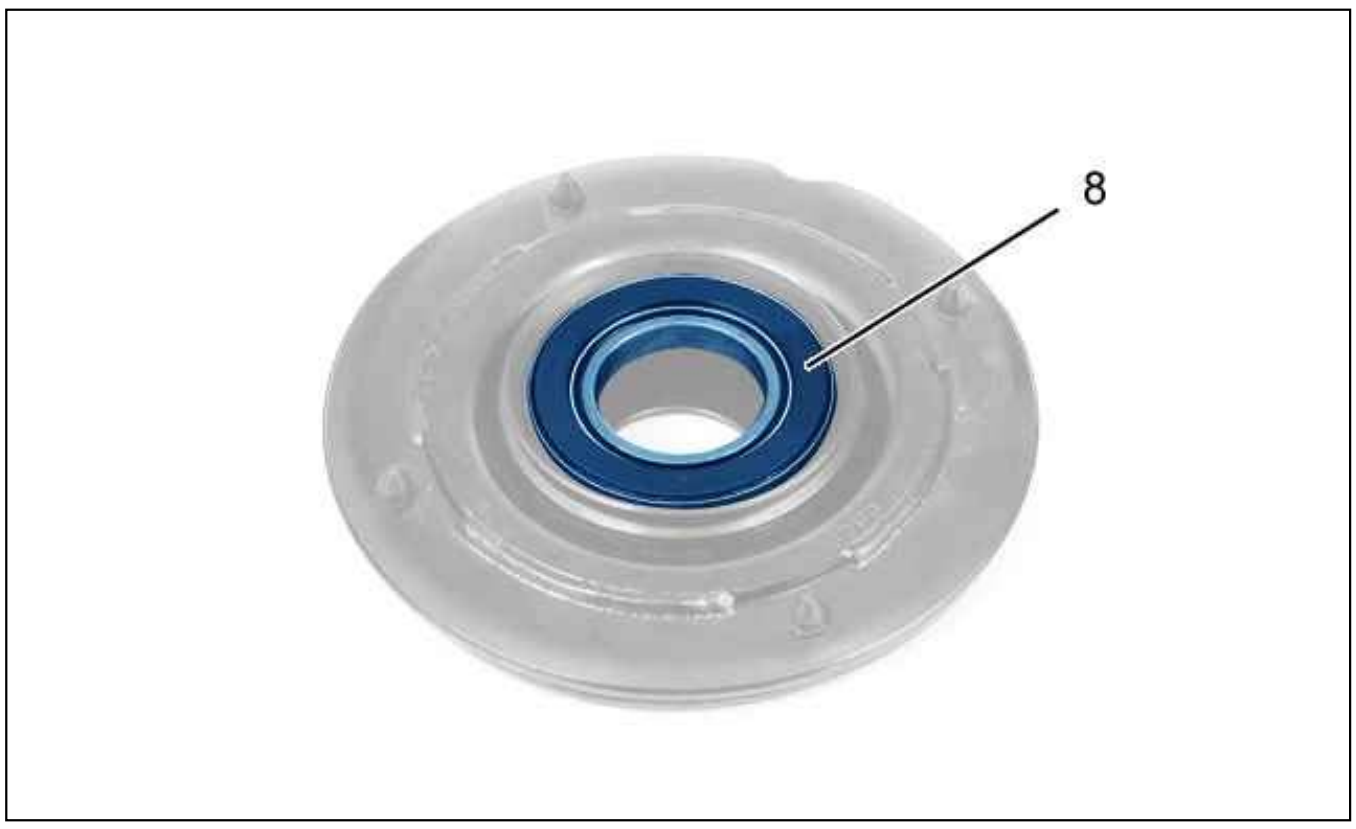

Figure : B3BP1DAD

Check the condition of the ball stop (8).
Replace the ball stop (8) (if necessary).

CAUTION : Observe the direction of fitting of the ball stop (8).

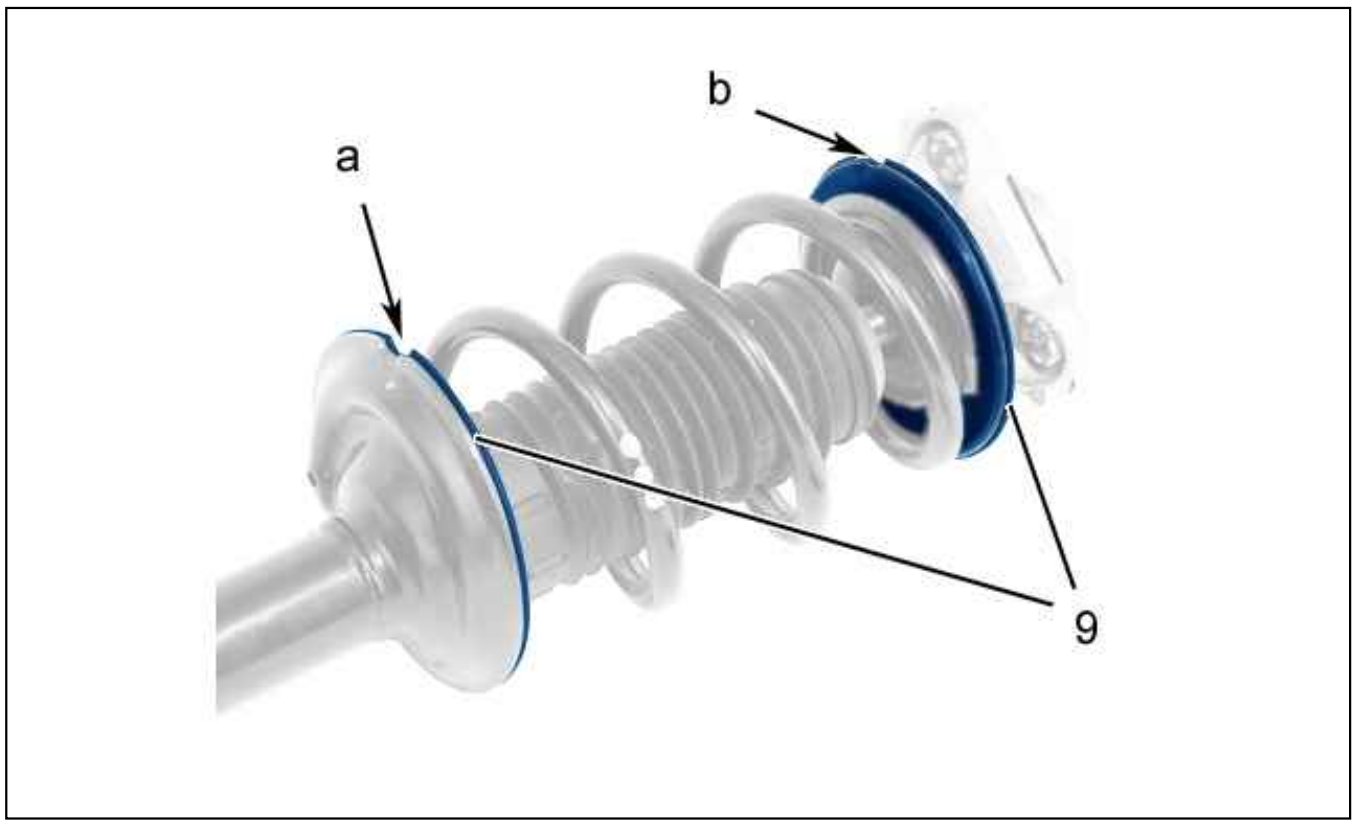

Figure : B3BP1DBD

CAUTION : Check the condition of the suspension spring (absence of signs of impact, scratches or corrosion spots). The paint coating on the suspensior spring should not be damaged, leaving the metal bare. Check that the rubber protectors (9) are present and in good condition.

CAUTION : Observe the positioning of the rubber protectors (9) (as "a", "b").

Refit :

- Damper (7) provided with bump stop (6)
- The thrust cup (5) fitted with its rubber protector
- The damper bracket (4)
- The nut (3) ; Using the tools [3], [4]

Tighten the nut (3) to 9 ± 0,8 daN.m.
Release the spring (2) ; Using the tools [1], [2].
Position the tool [5] in the front pivot opening .
Turn a quarter turn to open the pivot.
Couple the front pivot .

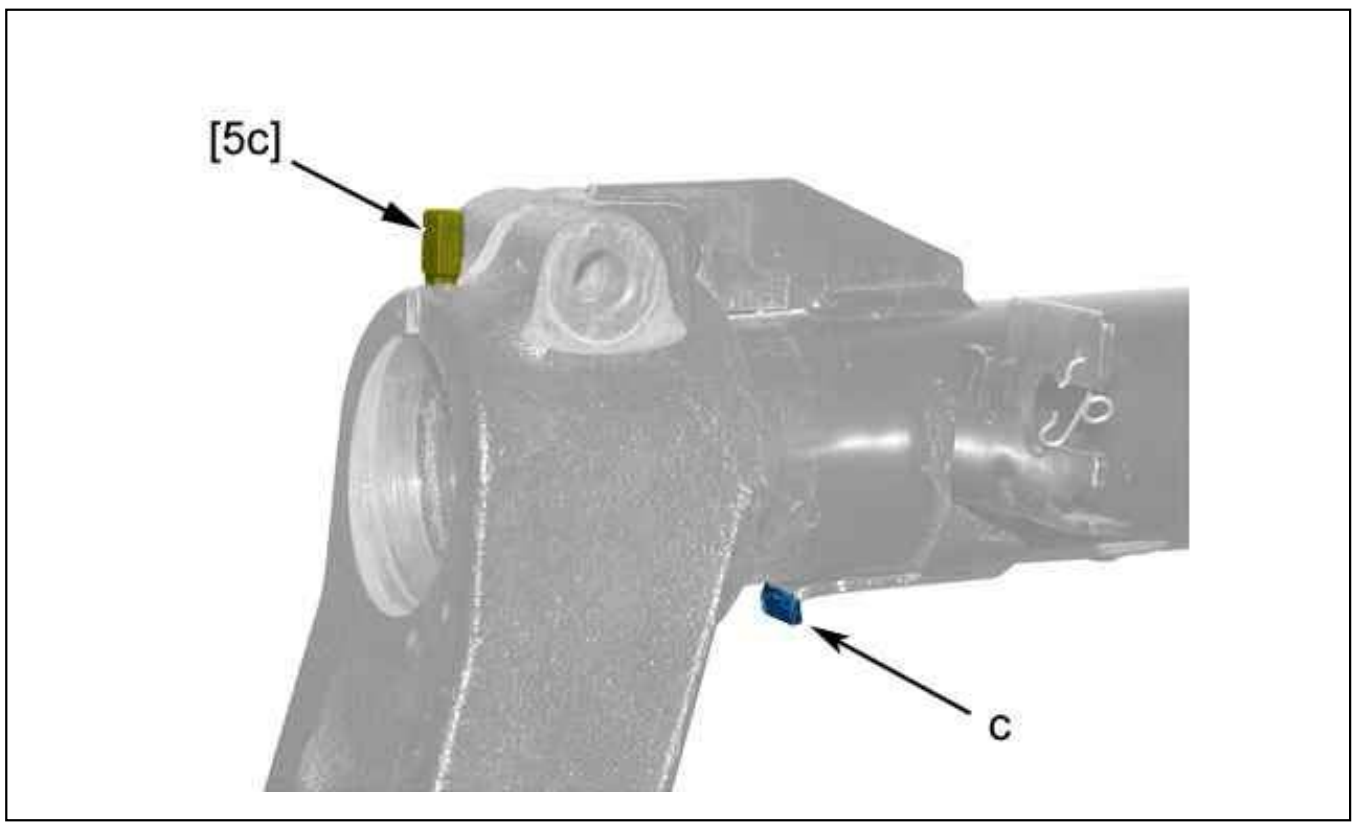

Figure : B3BP1DCD

Bring the front pivot as far as it go on the damper (at "c").
Refit bolt (1).
Remove the tool [5].
Tighten the bolt (1) to 12 ± 0,4 daN.m.

REMOVING - REFITTING : FRONT ANTI-ROLL BAR ROD

ESSENTIAL : Observe the safety and cleanliness recommendations .

ESSENTIAL : To remove the anti-roll bar rods (even partially) use the following procedure to avoid destroying the rod .

CAUTION : The use of impact wrenches is strictly prohibited.

1. Tooling

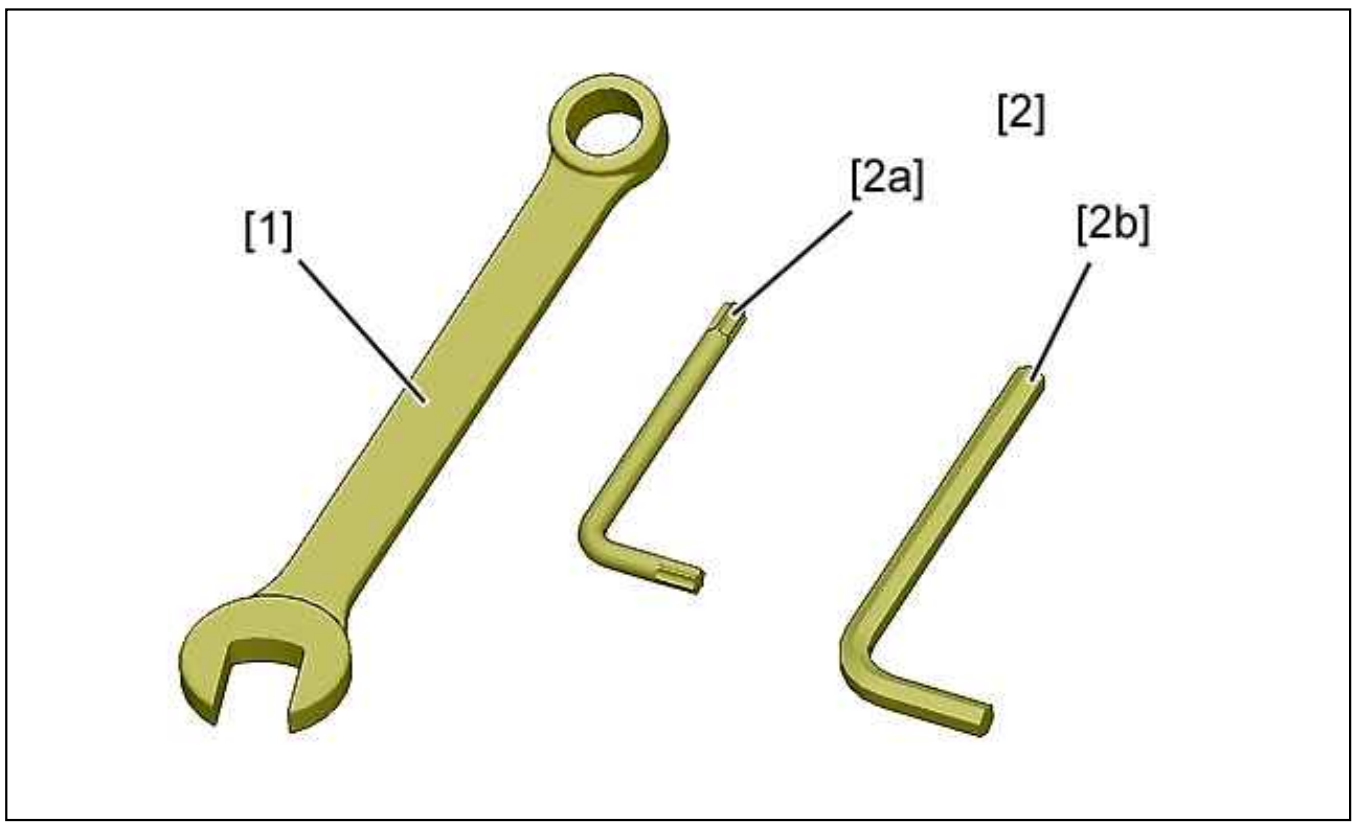

Figure : E5AM05DD

[1] Combination spanner.
[2] keys.
[2a] Spanner TORX (according to the assembly operations).
[2b] Spanner BTR (according to the assembly operations).

2. Removing

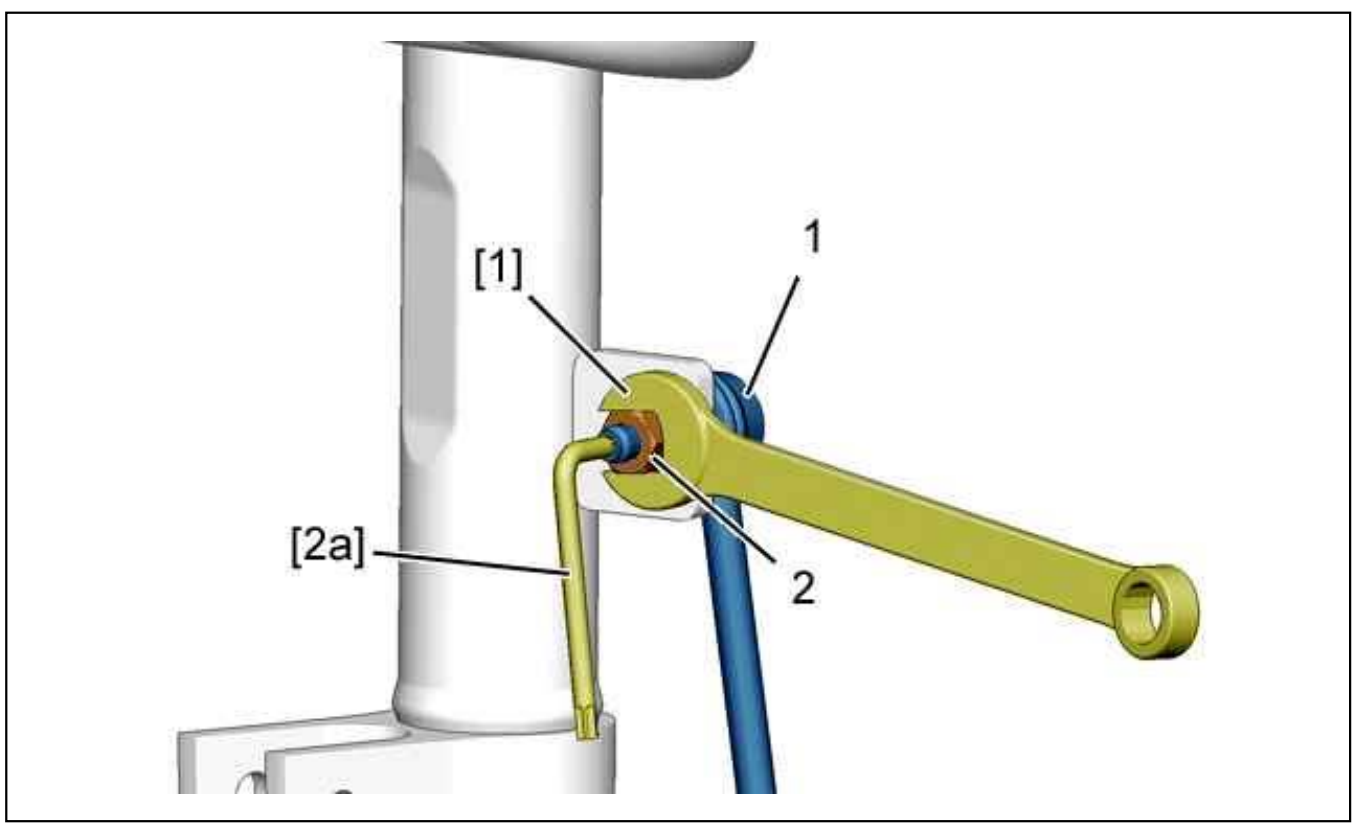

Figure : B3BM00SD

CAUTION : Risk of damaging the ball joint of the rod (1).

Proceed as follows :

- Immobilise the tail of the ball joint ; Using tool [2]
- Remove the nut (2) ; Using tool [1]
- Disengage the rod (1)

3. Refitting

CAUTION : Risk of damaging the ball joint of the rod (1).

Proceed as follows :

- Engage : The push rod (1)
- Engage : The nut (2) (new) (without tightening)
- Immobilise the tail of the ball joint ; Using tool [2]
- Tighten the nut (2) ; Tighten to the specified torque ; Refer to the procedure : Tightening torques (Front suspension)

TIGHTENING TORQUES : FRONT SUSPENSION

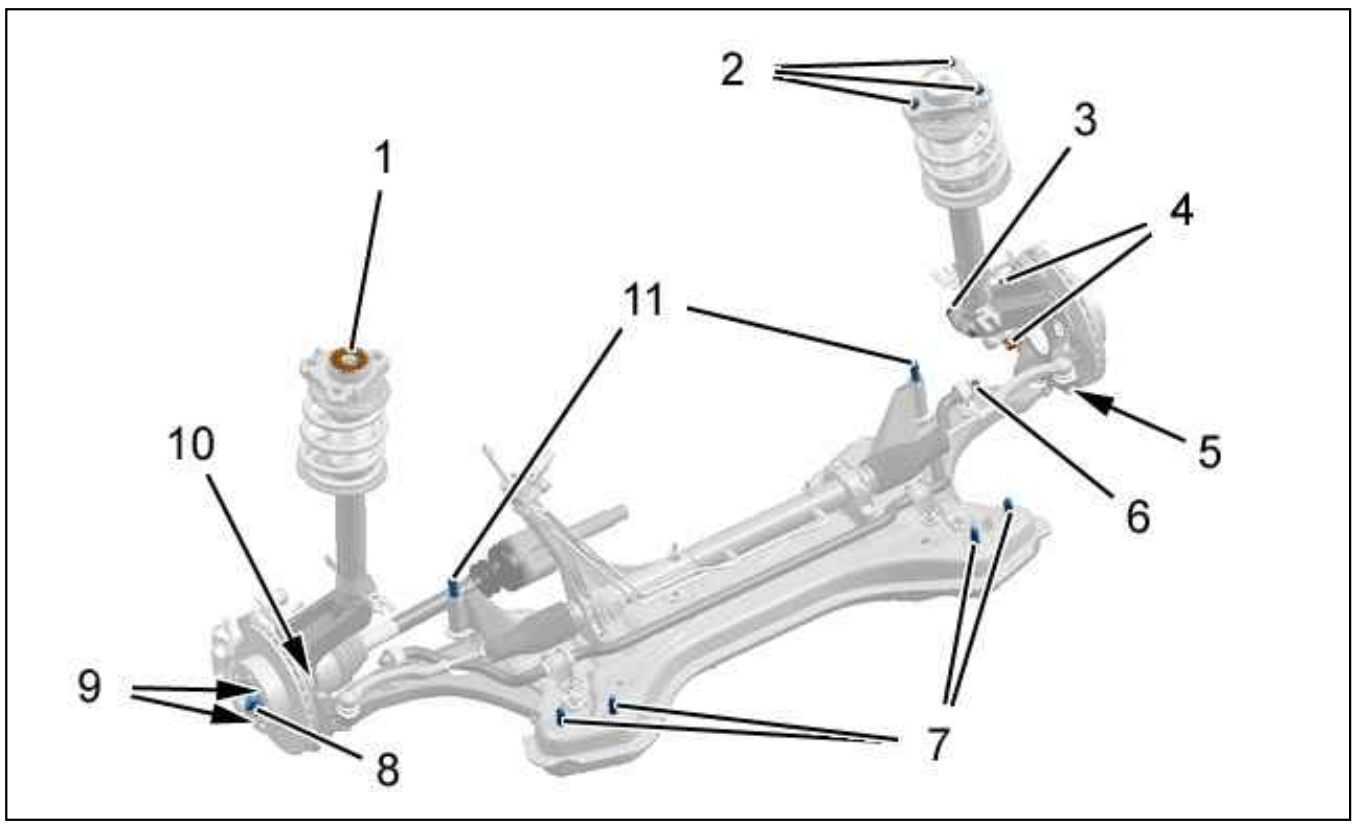

Figure : B3CP0BZD

Reference	Designation	Tightening torque
(1)	nut - Damper rod	9 ± 0,8 daNm
(2)	Suspension leg fixing - Body	6 ± 2,3 daNm
(3)	bolts - Damper on front hub carrier	12 ± 0,4 daNm
(4)	bolts - Yoke on brake caliper	21 ± 0,7 daNm
(5)	nut - Steering ball joint on front hub carrier	8 ± 0,7 daNm
(6)	nut - Anti-roll bar transfer bar	5,6 ± 0,5 daNm
(7)	Rear bolts - Front subframe	29 ± 1 daNm
(8)	Hub nut	Pre-tighten : 15 ± 0,7 daNm
		Angular tightening : 35° +/- 3°
(9)	bolts - Front brake disc	1,2 ± 0,1 daNm
(10)	bolts - Front wheel sensor	0,8 ± 0,03 daNm
(11)	Front bolts - Front subframe	29 ± 1 daNm

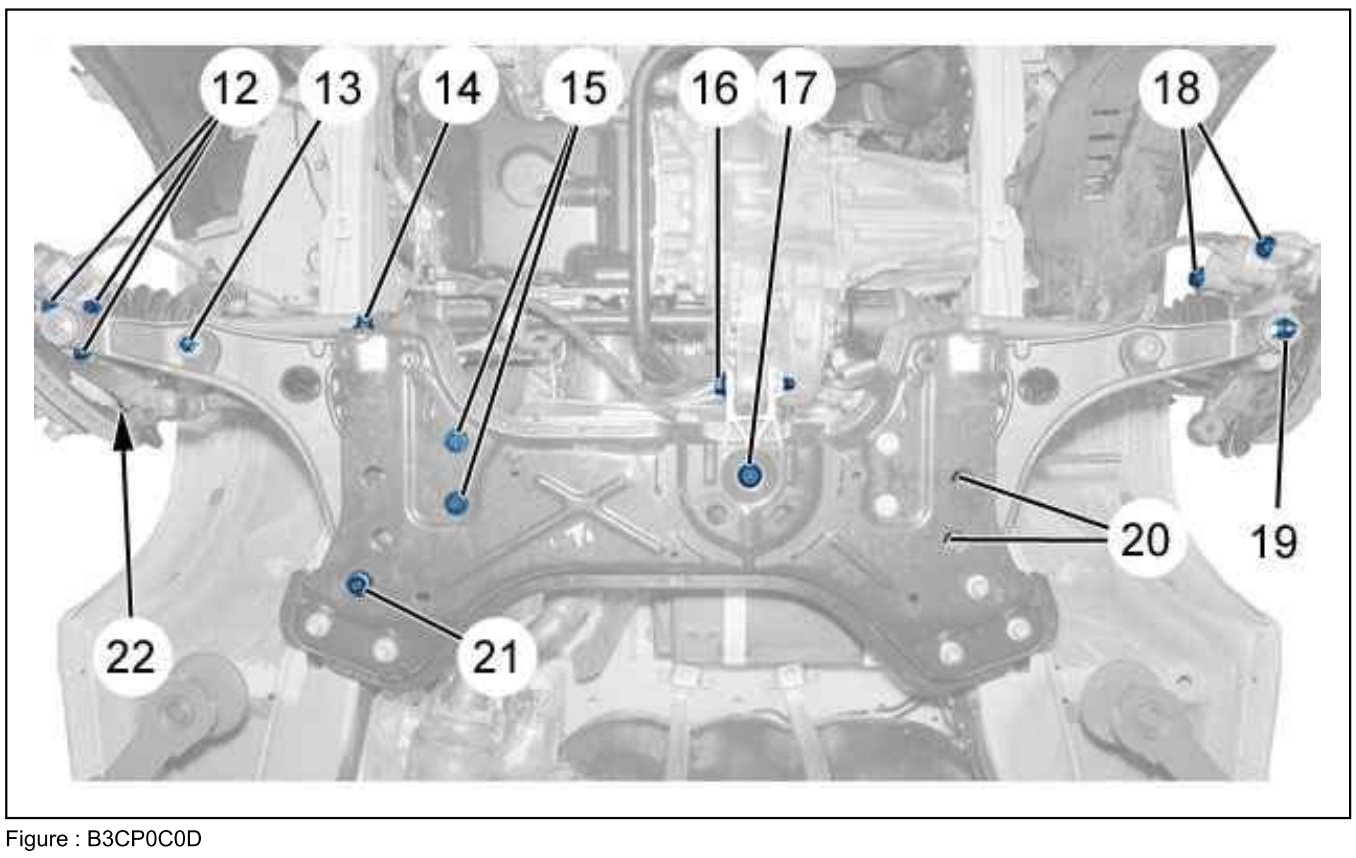

Figure : B3CP0C0D

Reference	Designation	Tightening torque
(12)	bolts - Front hub carrier ball-joint	11,5 ± 0,4 daNm
(13)	nut - Anti-roll bar transfer bar	5,6 ± 0,5 daNm
(14)	Horizontal bolt - Suspension arm on front subframe	32 ± 1,1 daNm
(15)	bolts - Steering mechanism	11 ± 1,4 daNm
(16)	bolts - Torque reaction rod on gearbox	29 ± 8 daNm
(17)	bolts - Torque reaction rod on front subframe	29 ± 1 daNm
(18)	bolts - front brake caliper	3,4 ± 0,3 daNm
(19)	nut - Hub carrier ball joint on suspension arm	15 ± 0,5 daNm
(20)	Anti-roll bar bearing fixing on front subframe	5 ± 1,3 daNm
(21)	Vertical bolt - Suspension arm on front subframe	32 ± 1,1 daNm

(22)	bolts - Heat shield on front hub carrier	2,5 ± 0,7 daNm

GENERAL SPECIFICATIONS : FRONT SUSPENSION

1. Front suspension

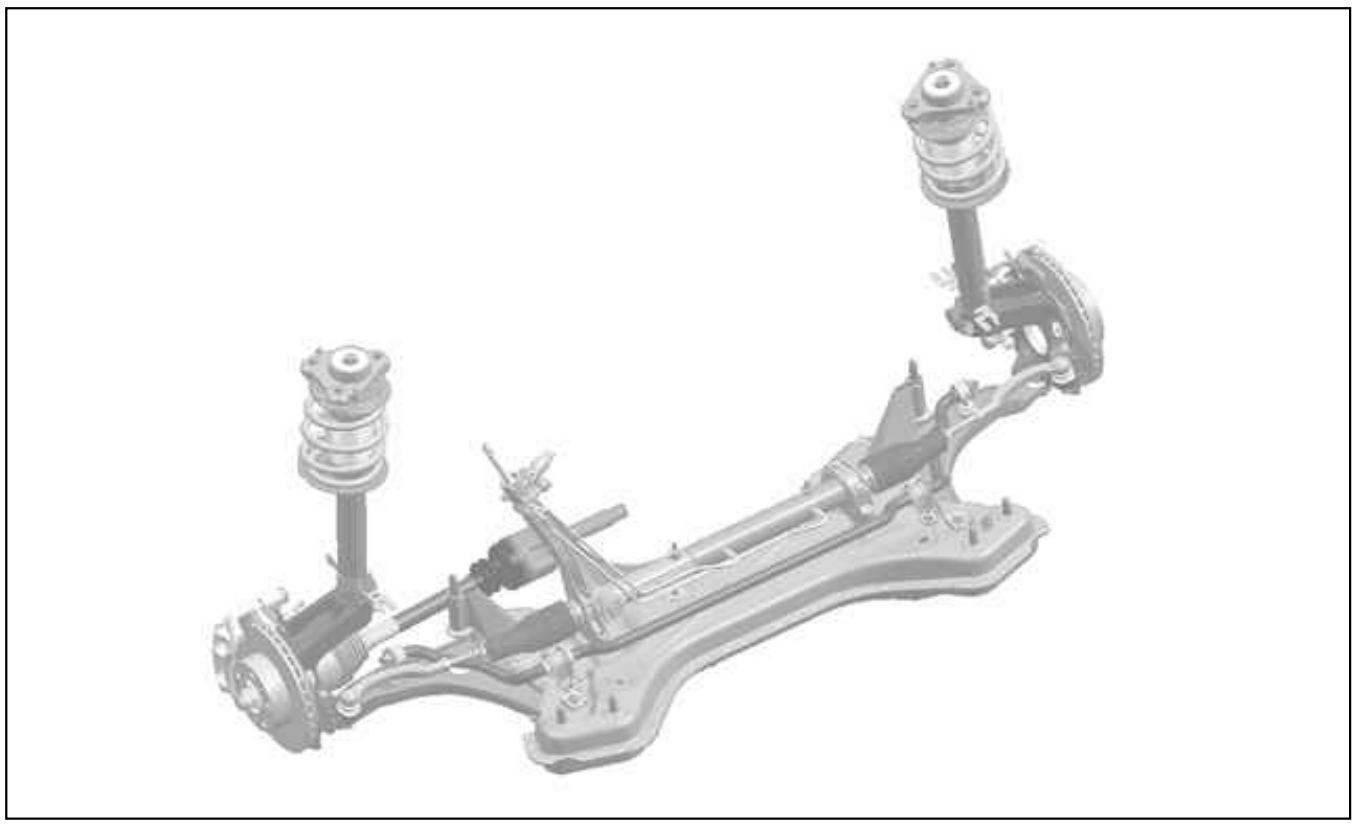

Figure : B3CP0CGD

The front axle is of the pseudo "Mac Pherson" type, with independant wheels.
Conical roller hub bearings, with integral magnetic target.
External diameter of the hub bearing : 90 mm .

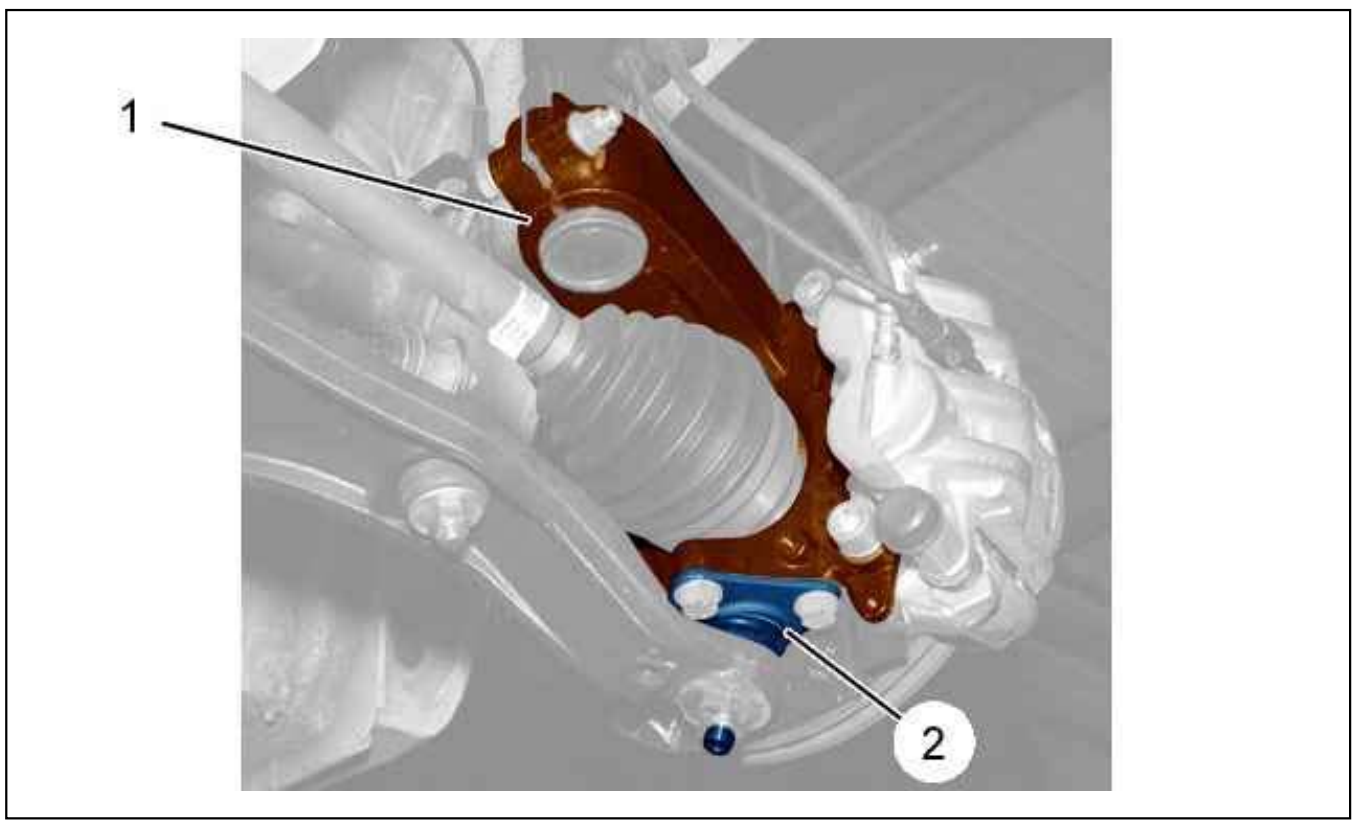

Figure : B3BP1DFD

(1) "pinch" type pivot.
(2) bottom ball-joint clamp (removable).

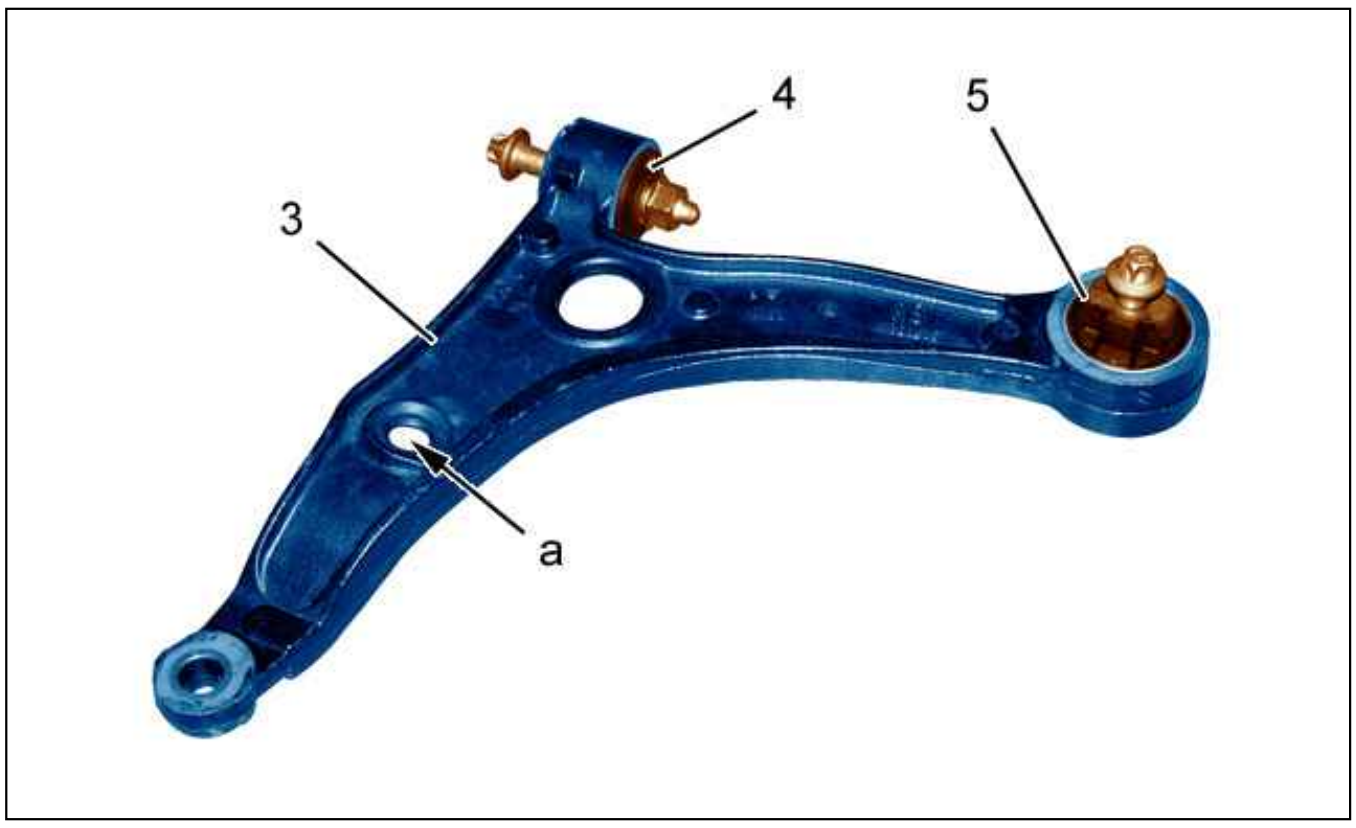

Figure : B3BP1DGD

(3) Suspension arm.
(4) Suspension arm front bush (Horizontal).
(5) Suspension arm rear bush (Vertical).
Fixing of anti-roll bar rod on suspension arm (at "a").

1.1. Suspension spring damper

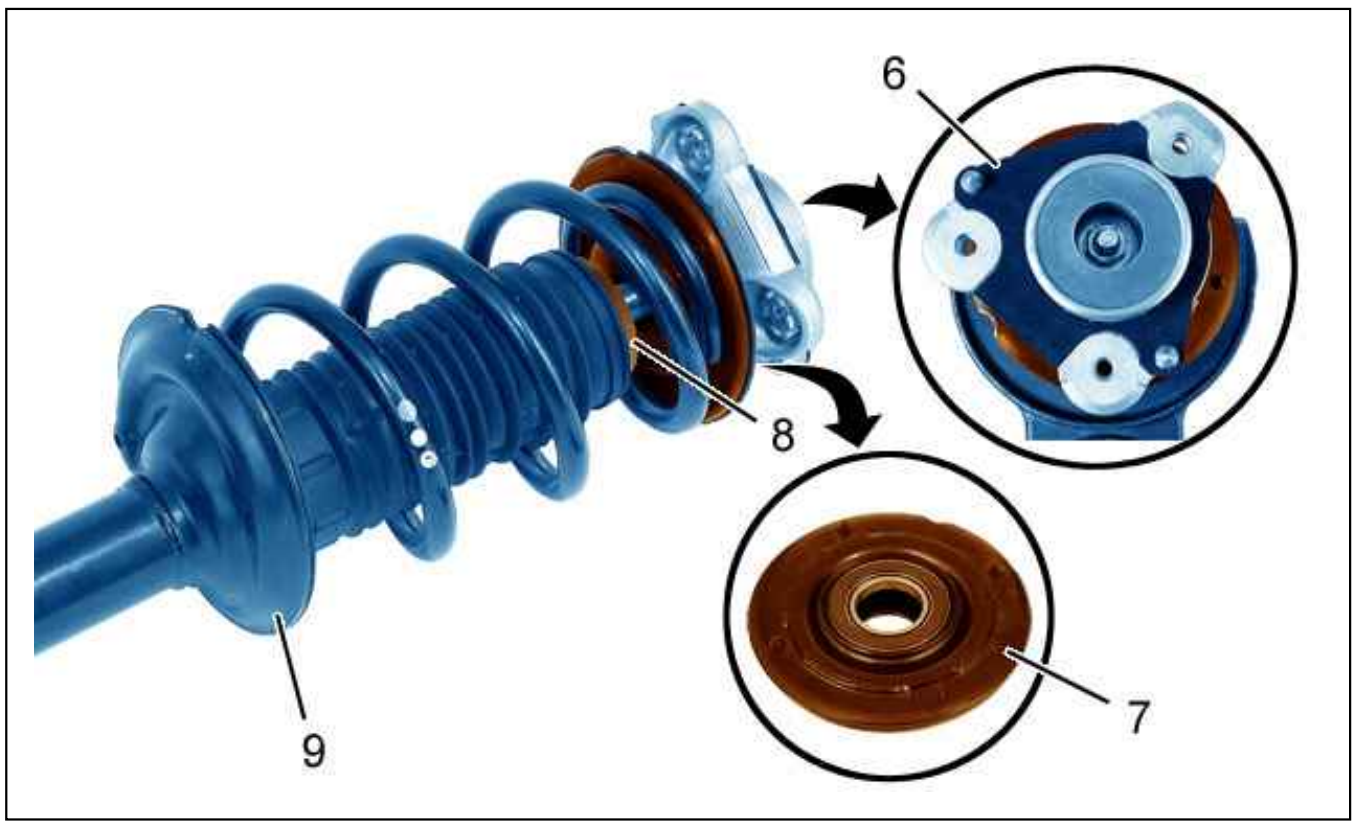

Figure : B3BP1DHD

(6) Upper stop on body.
(7) ball type stop .
(8) Movement stop .
(9) damper.

1.2. Anti-roll bar

A single anti-roll bar diameter.
Anti-roll bar bearings not removable.

2. Suspension geometry

N.B. : The geometry specifications are given with the values for checking and adjusting the axle geometries (see the relevant operation).

REMOVING - REFITTING : FRONT SUSPENSION LOWER ARM

1. Recommended tools

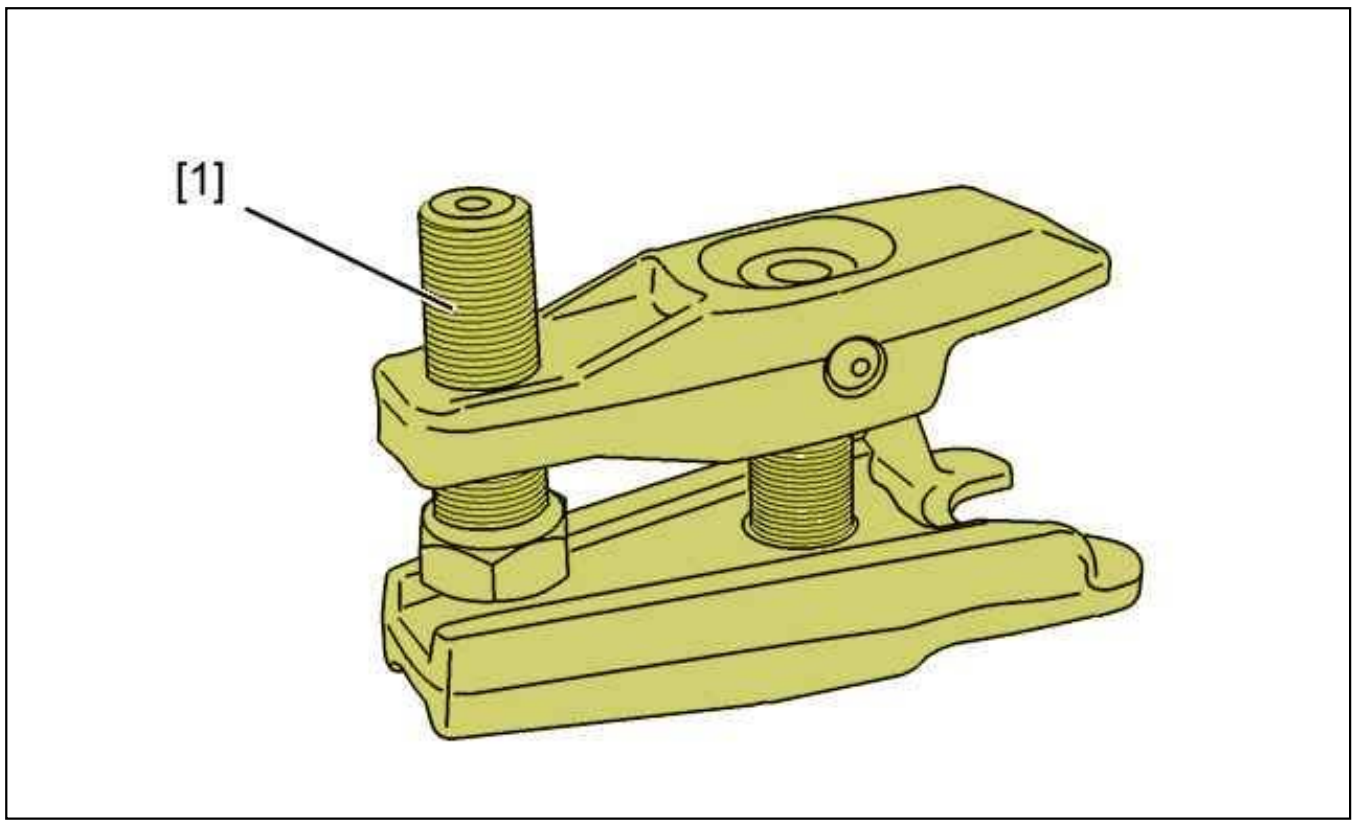

Figure : E5AP2WYD

Reference	Designation	Reference	Reference
[1]	ball-joint extractor	5707-T	(-).0919

2. Removing

Untighten the wheel screws (front).
Lift and support the vehicle with front wheels suspended.
Remove the front wheels.

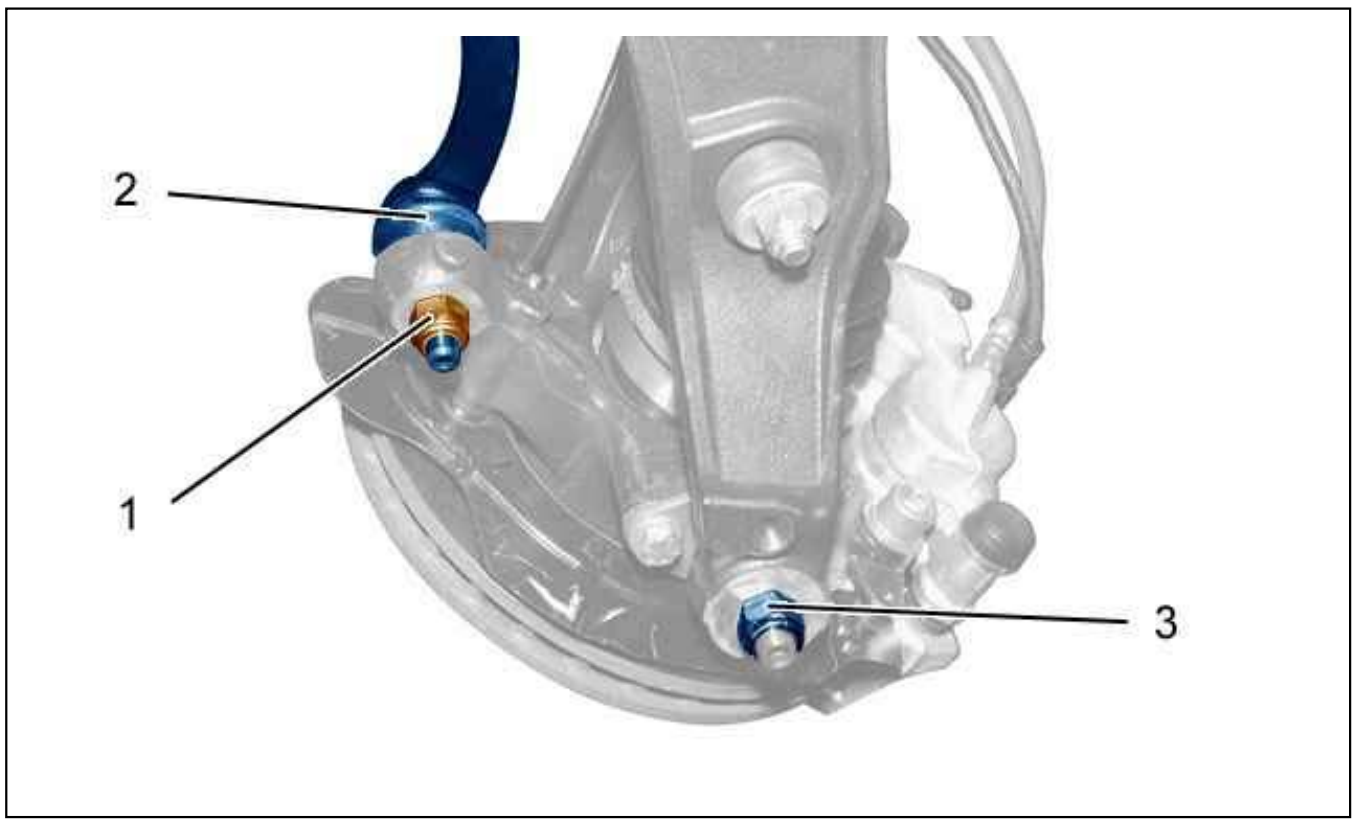

Figure : B3FP7KAD

Remove the nut (1).
Uncouple the steering ball-joint (2) ; Using tool [1].
Unscrew nut (3).

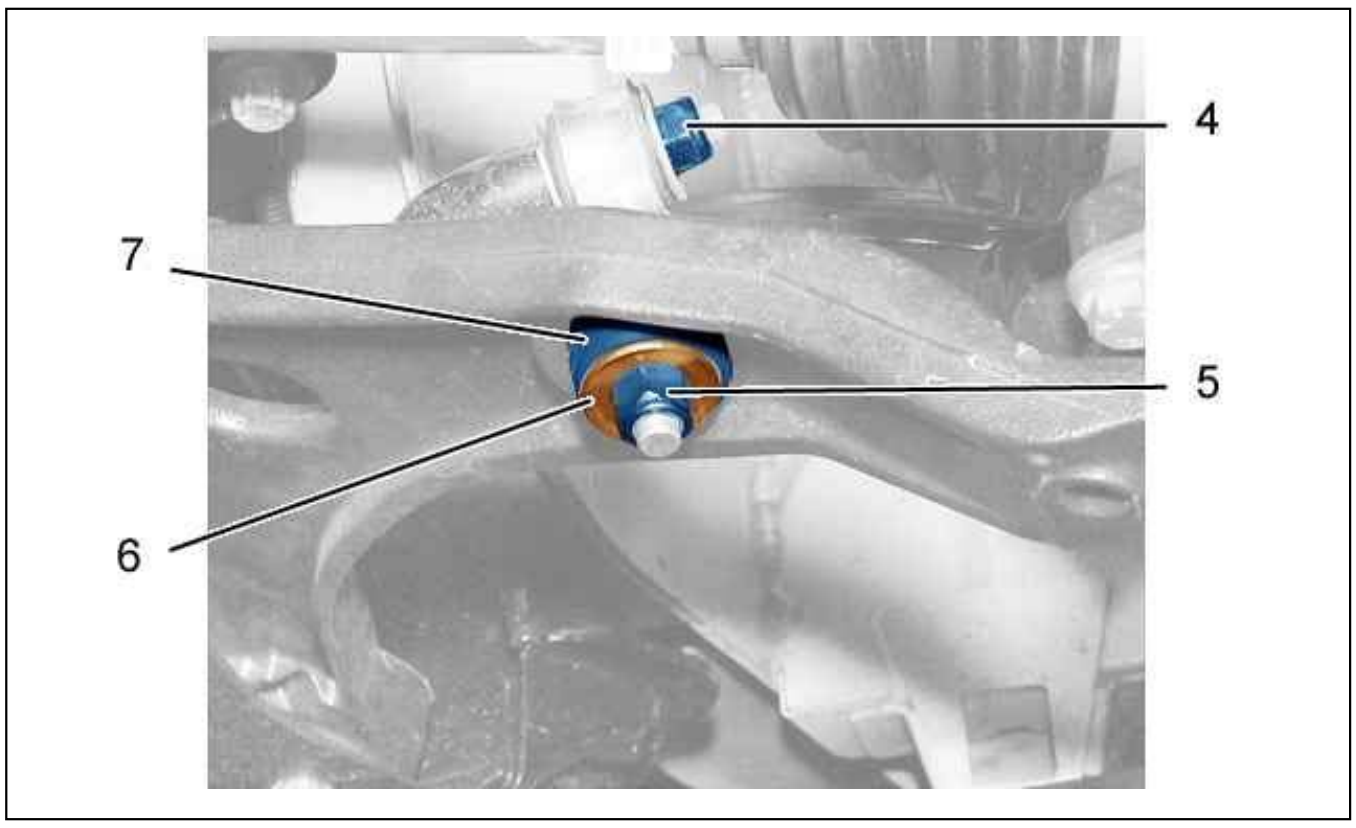

Figure : B3CP0BED

Unscrew nut (4) (on each side).
Remove (on each side) :

- The nut (5)
- The washer (6)
- The silentblock (7)

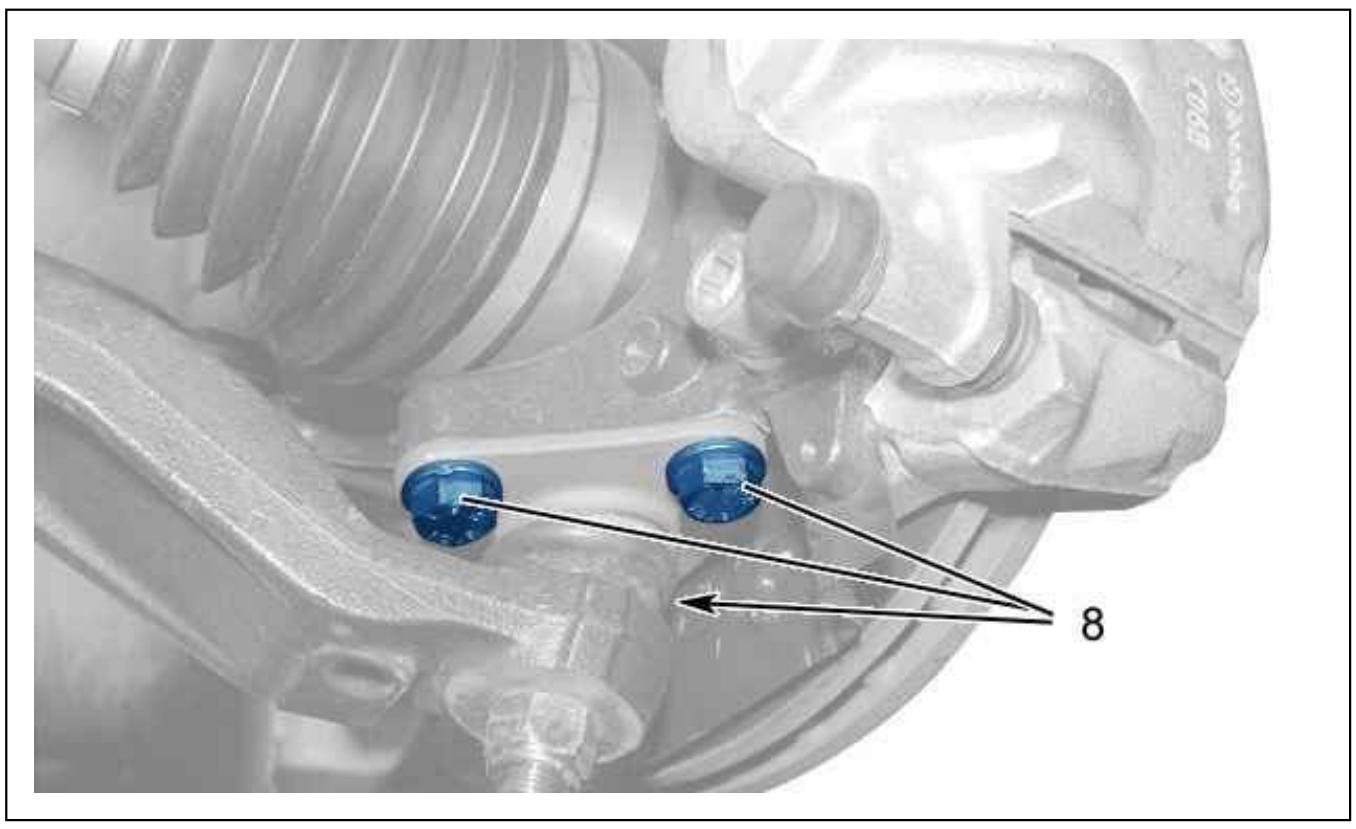

Figure : B3FP7KBD

Remove the 3 bolts (8).
Move aside the front pivot .

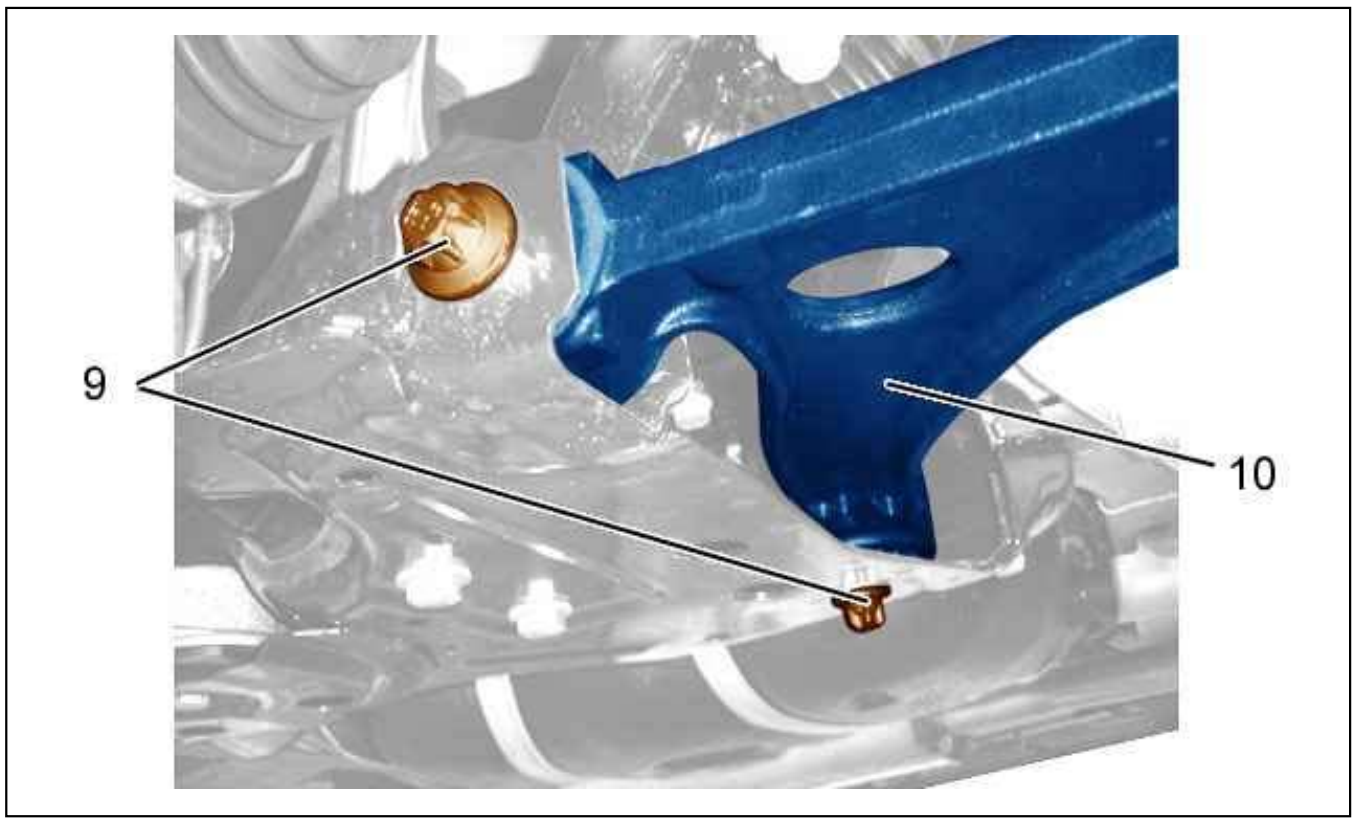

Figure : B3CP0BFD

Slacken the bolts (9).

Remove :

- The bolts (9)
- The front lower suspension arm (10)

Remove the nut (3).
Uncouple the ball joint ; Using tool [1].

3. Refitting

N.B. : Always fit new Nylstop nuts.

Couple the ball-joint to the front lower suspension arm (10).
Refit :

- The nut (3)
- The lower front suspension arm (10) by engaging the anti-roll bar rod
- The bolts (9) (without tightening)
- The 3 bolts (8)

Tighten the bolts (8) to 11,5 ± 0,4 daN.m.
Refit (left and right hand sides) :

- The silentblock (7)
- The washer (6)
- The nut (5)

Tighten the nut (3) to 15 ± 0,5 daN.m.
Couple up the steering ball-joint (2).
Refit the nut (1) ; Tighten to 8 ± 0,7 daN.m.
each side ; Tighten the nuts (4), (5) to 5,6 ± 0,5 daN.m.
Tighten the bolts (9) to 32 ± 1,1 daN.m.
Fit the wheels.
Return the vehicle to its wheels.
Tighten the wheel bolts .

REMOVING - REFITTING : FRONT SUBFRAME

ESSENTIAL : Observe the safety and cleanliness recommendations.

1. Recommended tools

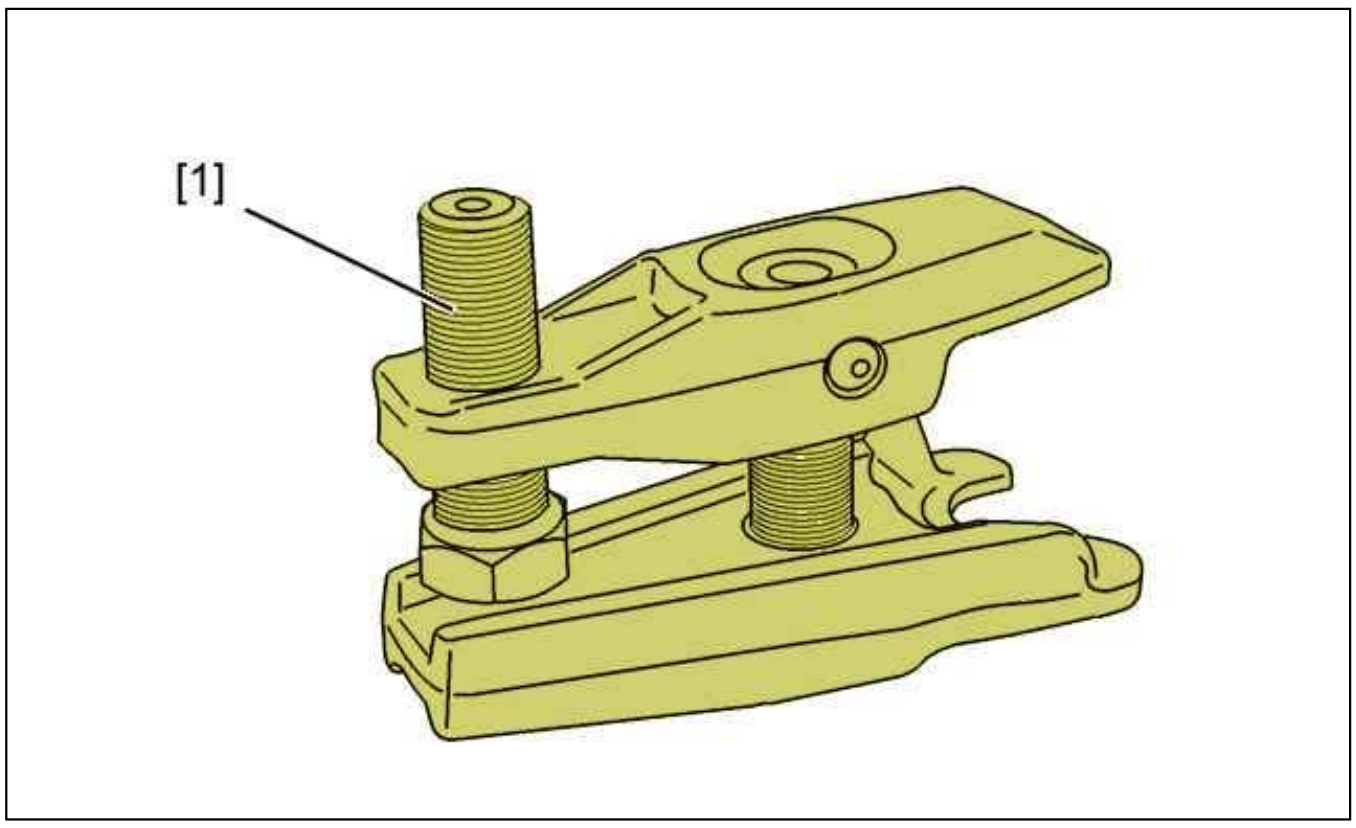

Figure : E5AP2WYD

Reference	Designation	Reference	Reference
[1]	ball-joint extractor	5707-T	(-).0919

2. Removing

Untighten the wheel screws (front).
Lift and support the front of the vehicle.
Remove the front wheels.

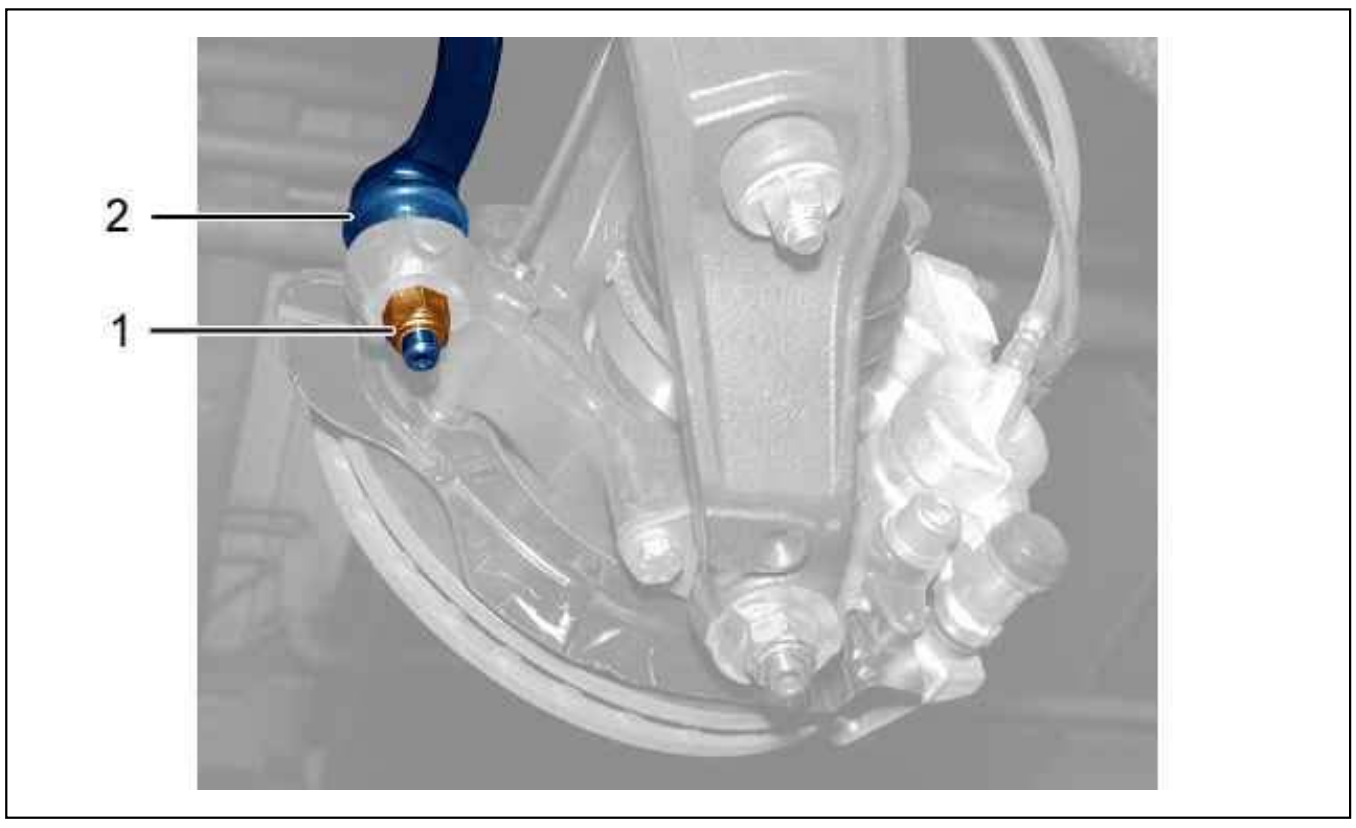

Figure : B3FP7JJD

Remove the nut (1) (on each side).
Uncouple the steering ball-joint (2) ; Using tool [1] (on each side).

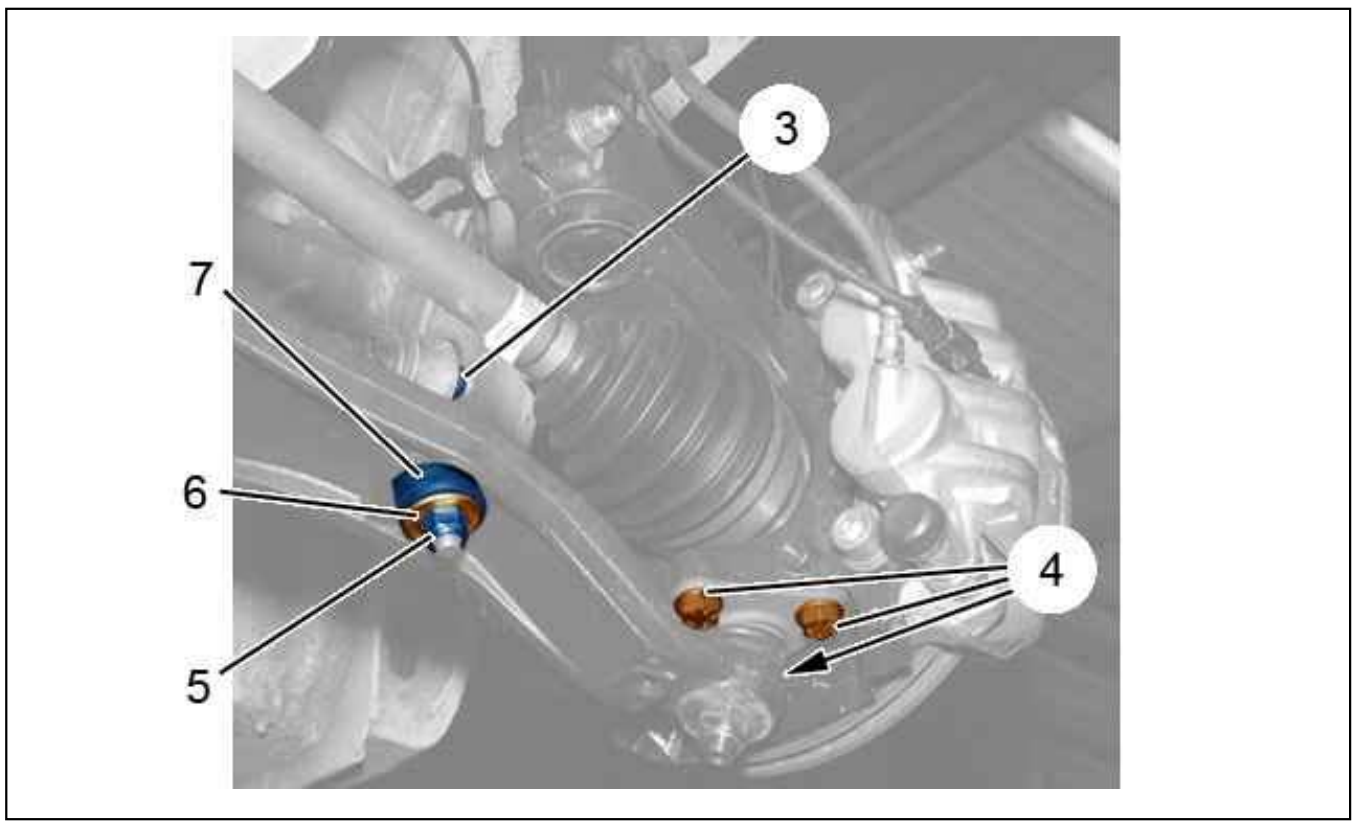

Figure : B3BP1CPD

Unscrew nut (3) (on each side).
Remove (on each side) :

- The nut (5)
- The washer (6)
- The silentblock (7)
- The 3 bolts (4)

Move aside the hub carrier (on each side).

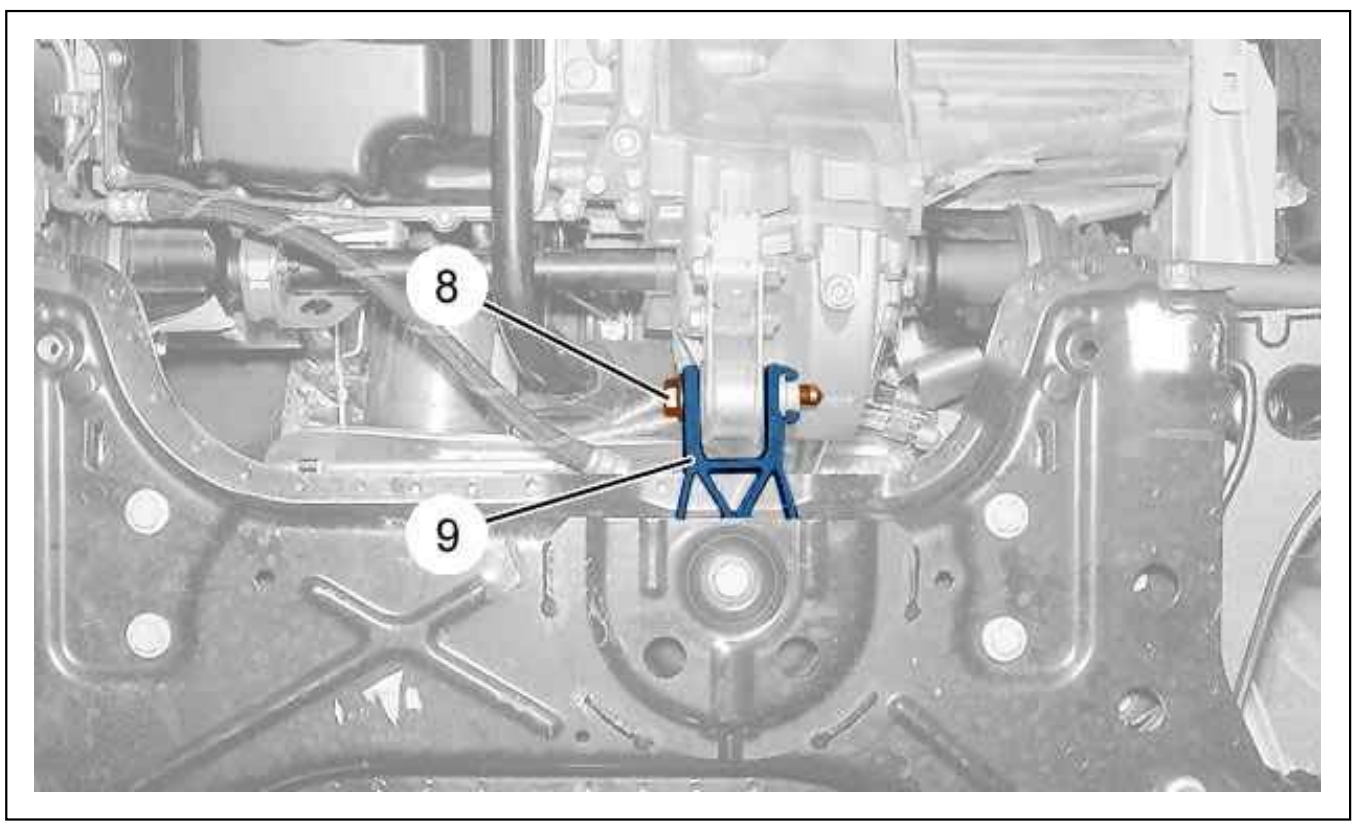

Figure : B3CP0BJD

Remove bolts (8).
Move aside the torque reaction rod (9) from the front subframe.
Position a lifting tool to retain the front sub-frame.

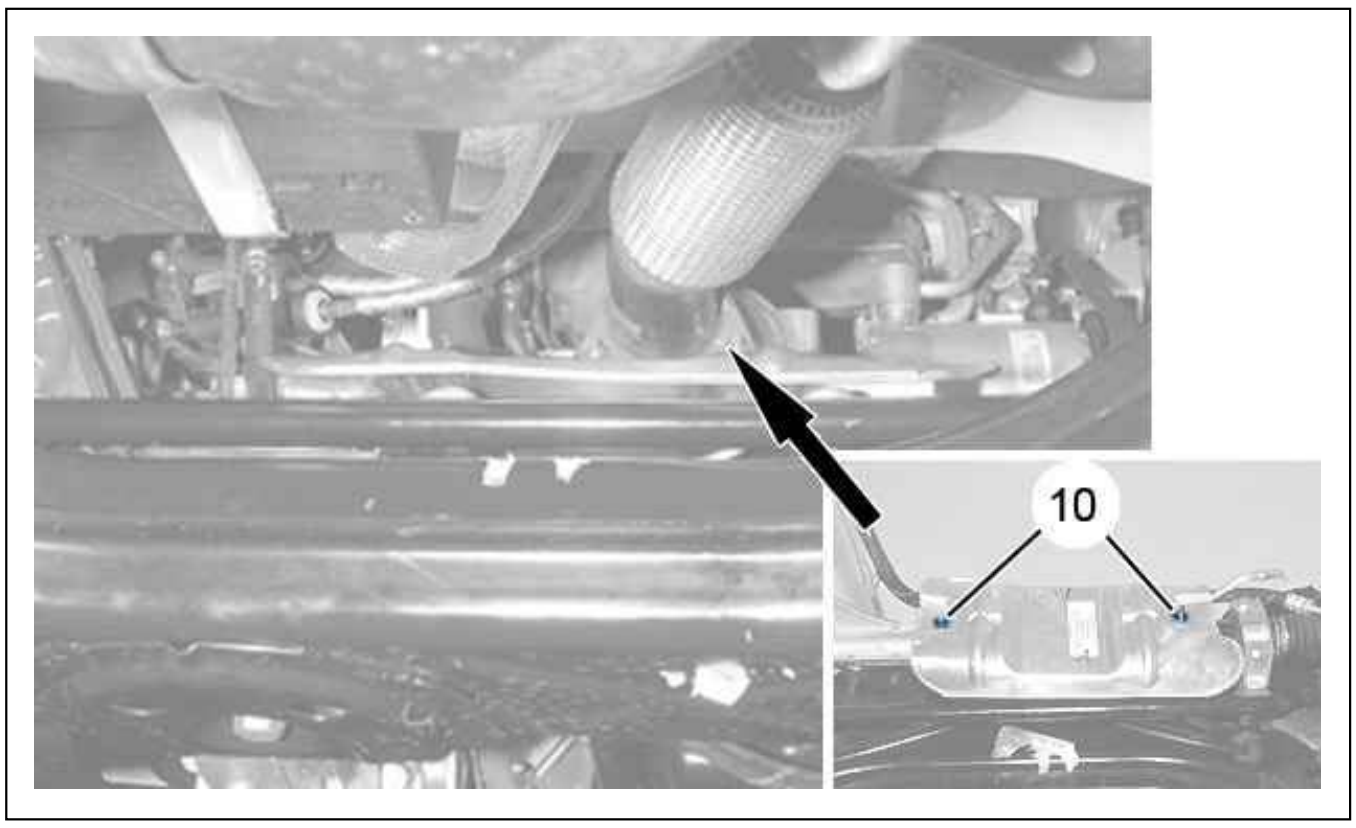

Figure : B3CP0BKD

Remove :

- The nuts (10)
- The steering mechanism thermal protector

Suspend the steering mechanism on the vehicle structure.

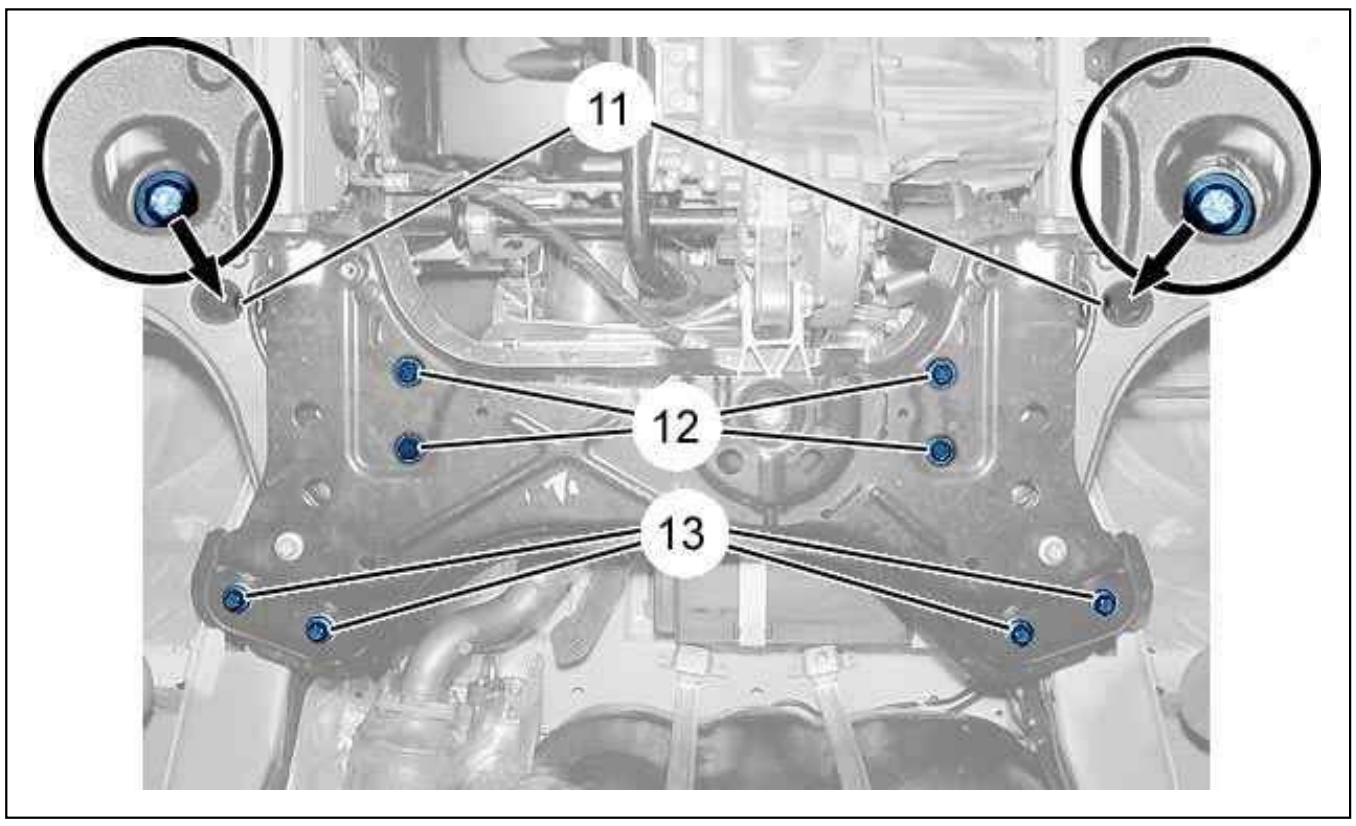

Figure : B3CP0CED

Remove :

- The bolts (11)
- The bolts (13)
- The bolts (12)

Remove the front subframe.

3. Refitting

N.B. : Always fit new Nylstop nuts.

Position the front subframe on the bodyshell.
Refit :

- The bolts (13) ; Tighten to 29 ± 1 daN.m
- The bolts (11) ; Tighten to 29 ± 1 daN.m
- The bolts (12) ; Tighten to 11 ± 1,4 daN.m
- The steering mechanism thermal protector
- The bolts (10) ; Tighten to 0,6 ± 0,17 daN.m

Engage the torque reaction rod (9) on the front subframe.
Refit bolt (8) ; Tighten to 13,5 ± 0,4 daN.m.
Position the hub carrier ball joint (on each side).
Refit (on each side) :

- The 3 bolts (4) ; Tighten to 11,5 ± 0,4 daN.m
- The silentblock (7)
- The washer (6)
- The nut (5)

Couple up the steering ball-joint (2) (on each side).

Refit the nut (1) ; Tighten to 8 ± 0,7 daN.m (on each side).
Fit the wheels.
Return the vehicle to its wheels.
Tighten (on each side) :

- The nut (3) to 5,6 ± 0,5 daN.m
- The nut (5) to 5,6 ± 0,5 daN.m

Tighten the wheel bolts .

REMOVING - REFITTING : FRONT PIVOT

1. Recommended tools

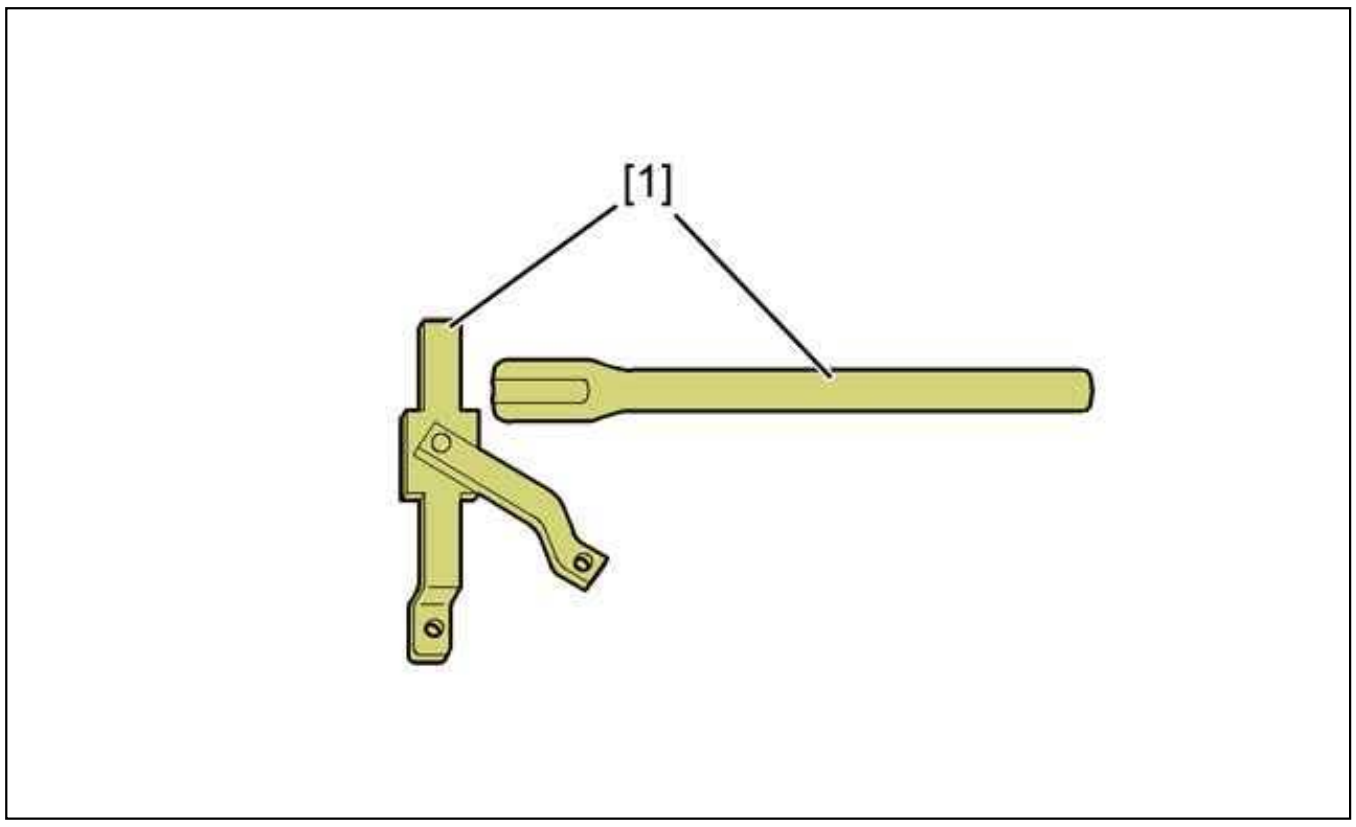

Figure : E5AP2Y3D

Reference	Designation	Reference	Reference
[1]	hub immobilising tool	6310-T	(-).0606AY

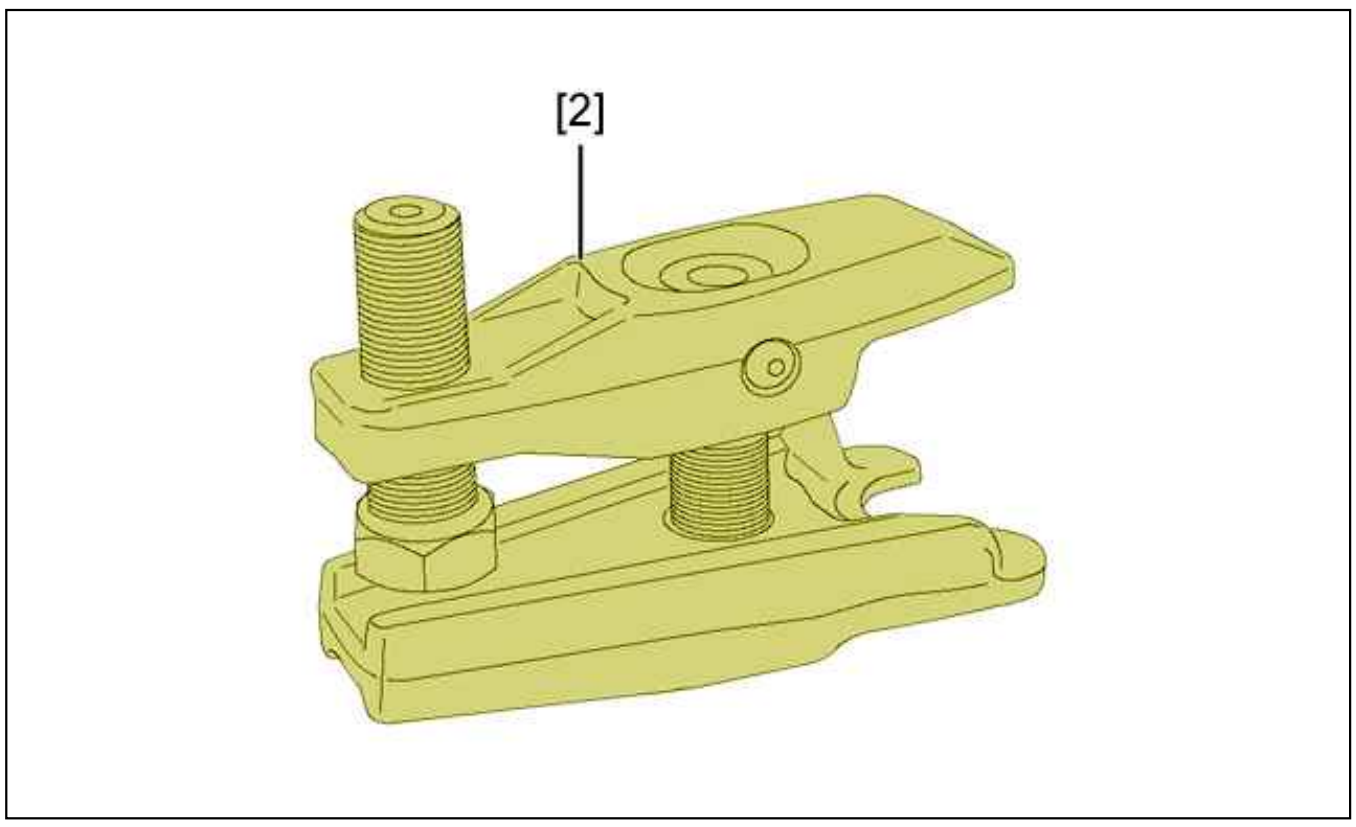

Figure : E5AP2Y4D

Reference	Designation	Reference	Reference
[2]	ball-joint extractor	5707-T	(-).0919

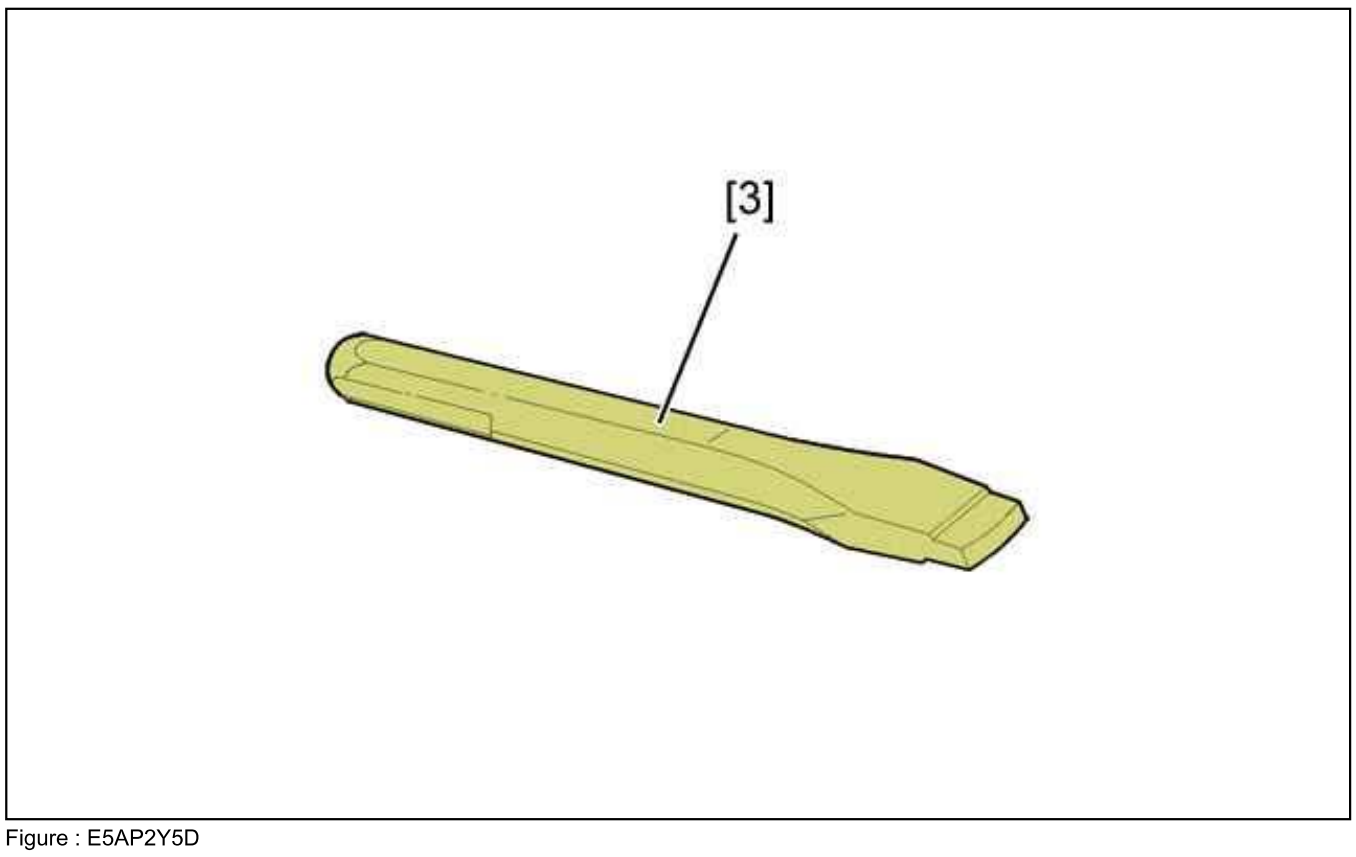

Figure : E5AP2Y5D

Reference	Designation	Reference	Reference
[3]	locking punch	5709-T.E	(-).0619 E

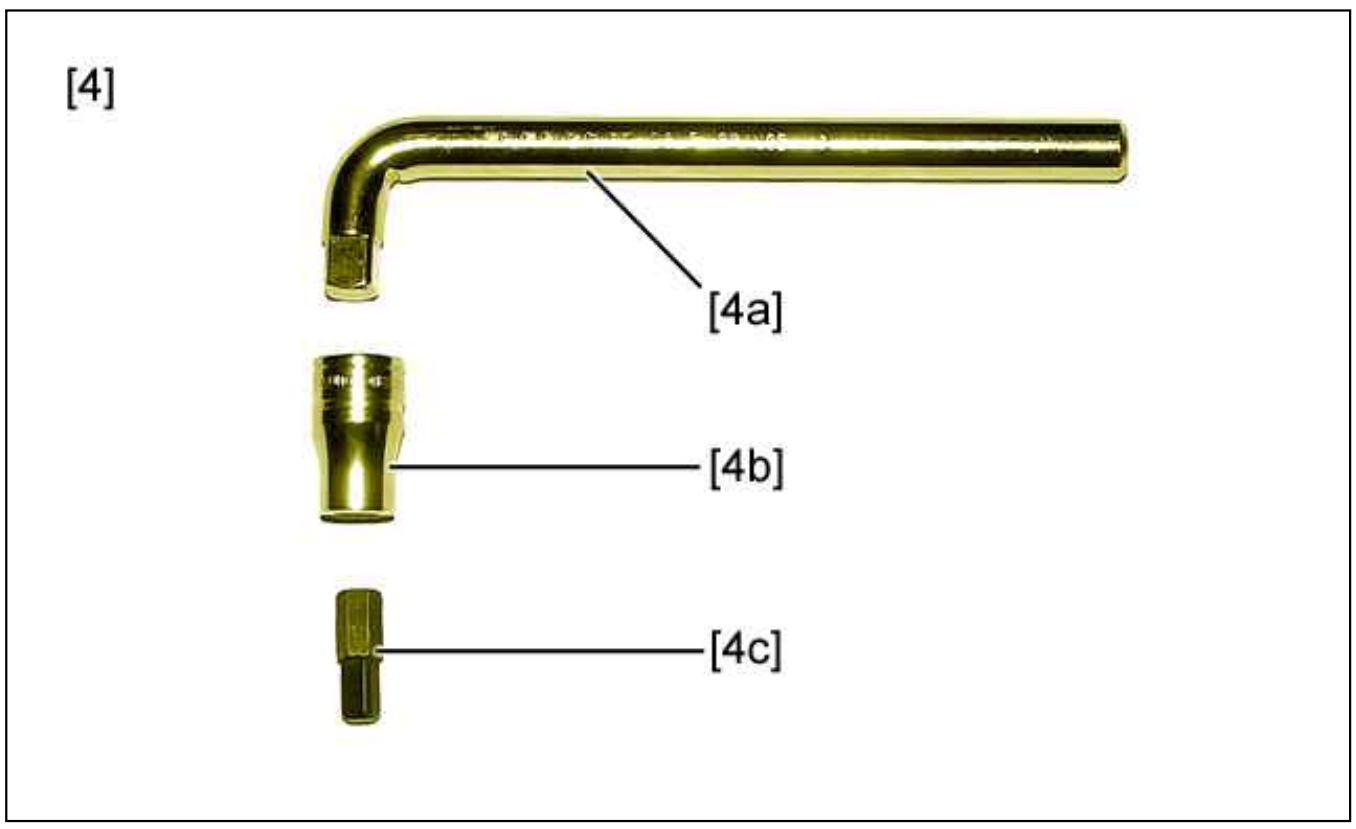

Figure : E5AP30VD

Reference	Designation
[4]	[/] pivot spreading tool Facom DS (From toolkit DS.J5)
[4a]	Spanner DS.P
[4b]	socket J.236
[4c]	adaptor DS.11A

ESSENTIAL : Observe the safety and cleanliness recommendations.

2. Removing

Untighten the wheel screws (front).
Lift and support the vehicle with front wheels suspended.
Remove the front wheels.

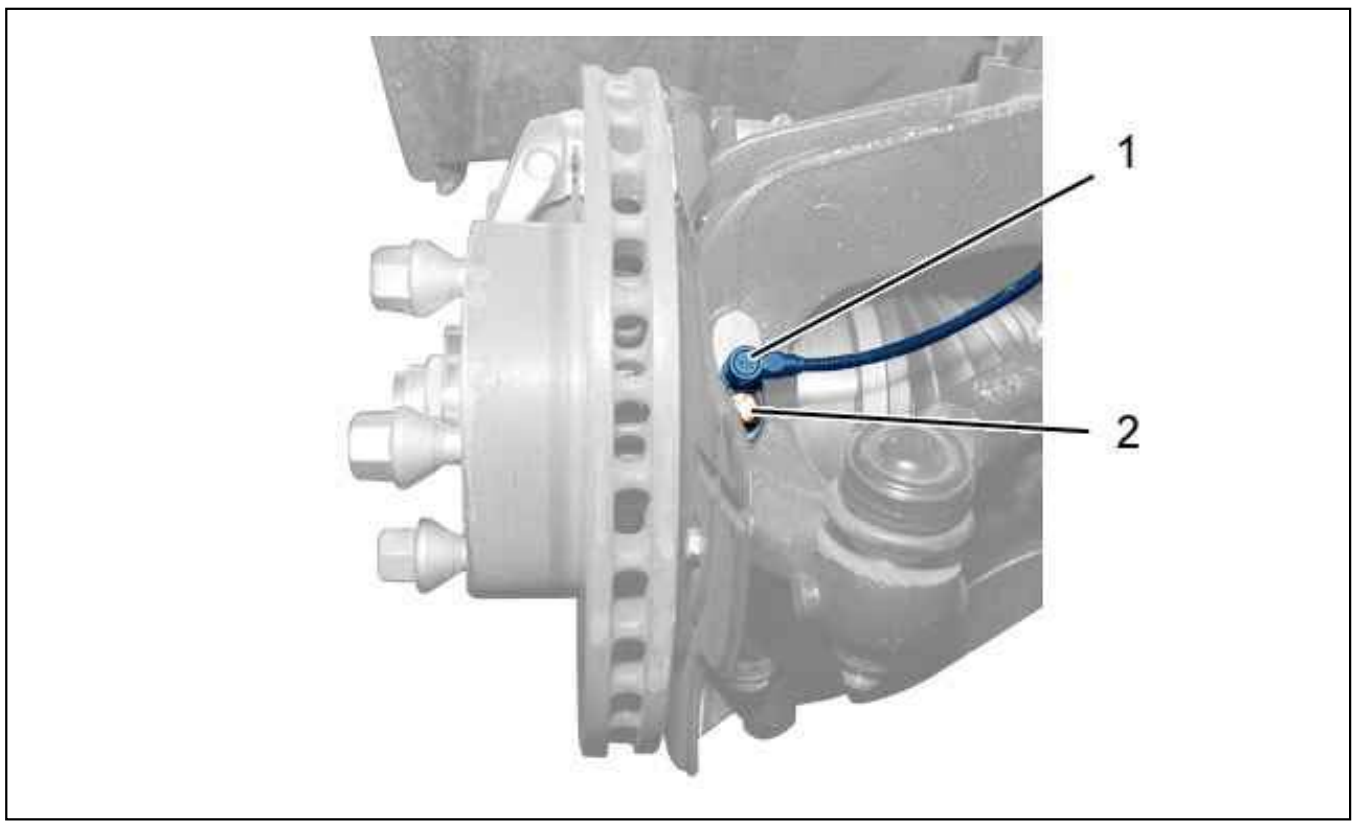

Figure : B3FP7KJD

Remove bolts (2).
Disengage the wheel speed sensor (1).
Suspend the wheel speed sensor (1).
Remove the brake pads (see the relevant operation).

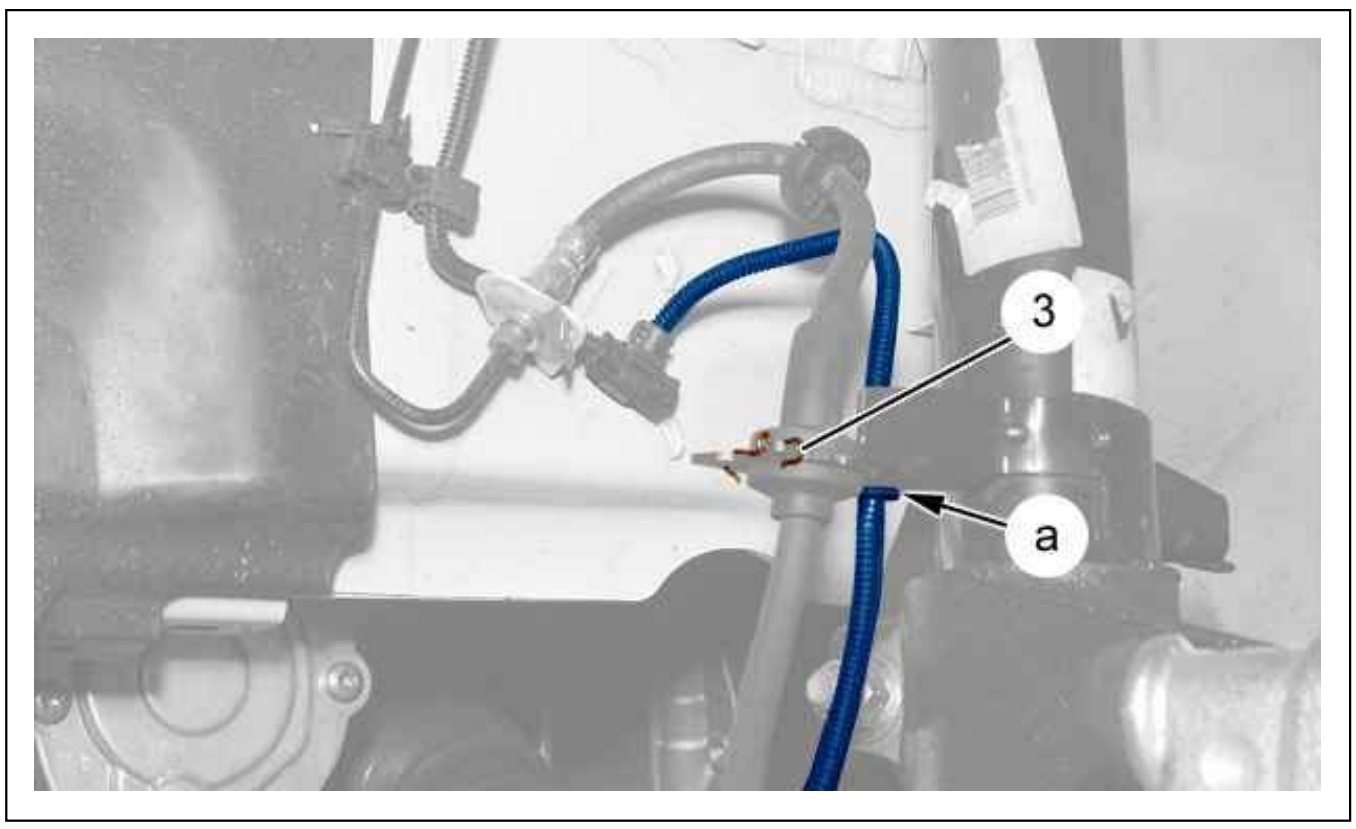

Figure : B3FP7MAD

Remove the fastener (3) and disengage the flexible union .
Liberate the wiring harness (at "a").

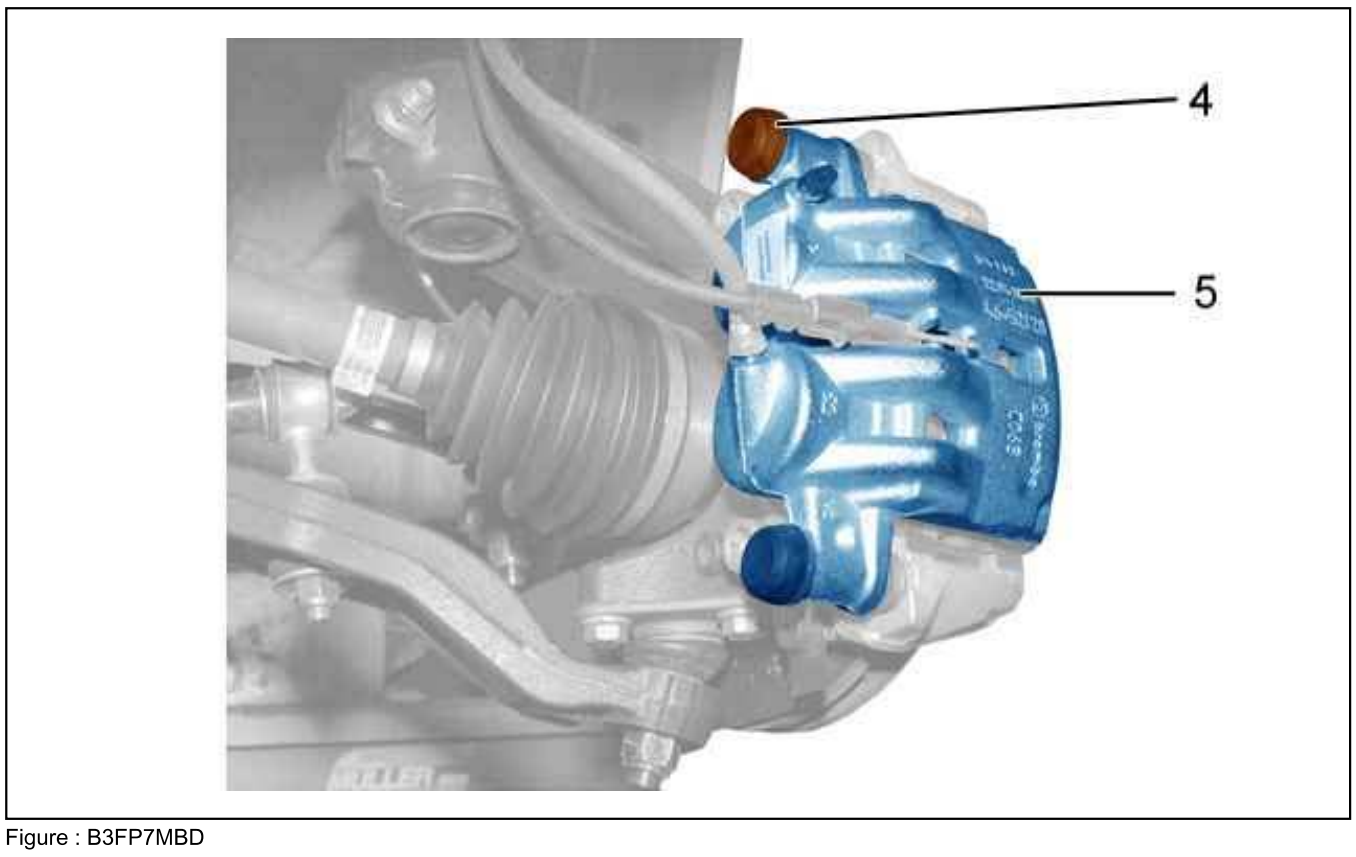

Figure : B3FP7MBD

Remove bolts (4).
Disengage the brake caliper (5).

Leave the caliper hanging (5).
Unlock the transmission nut .

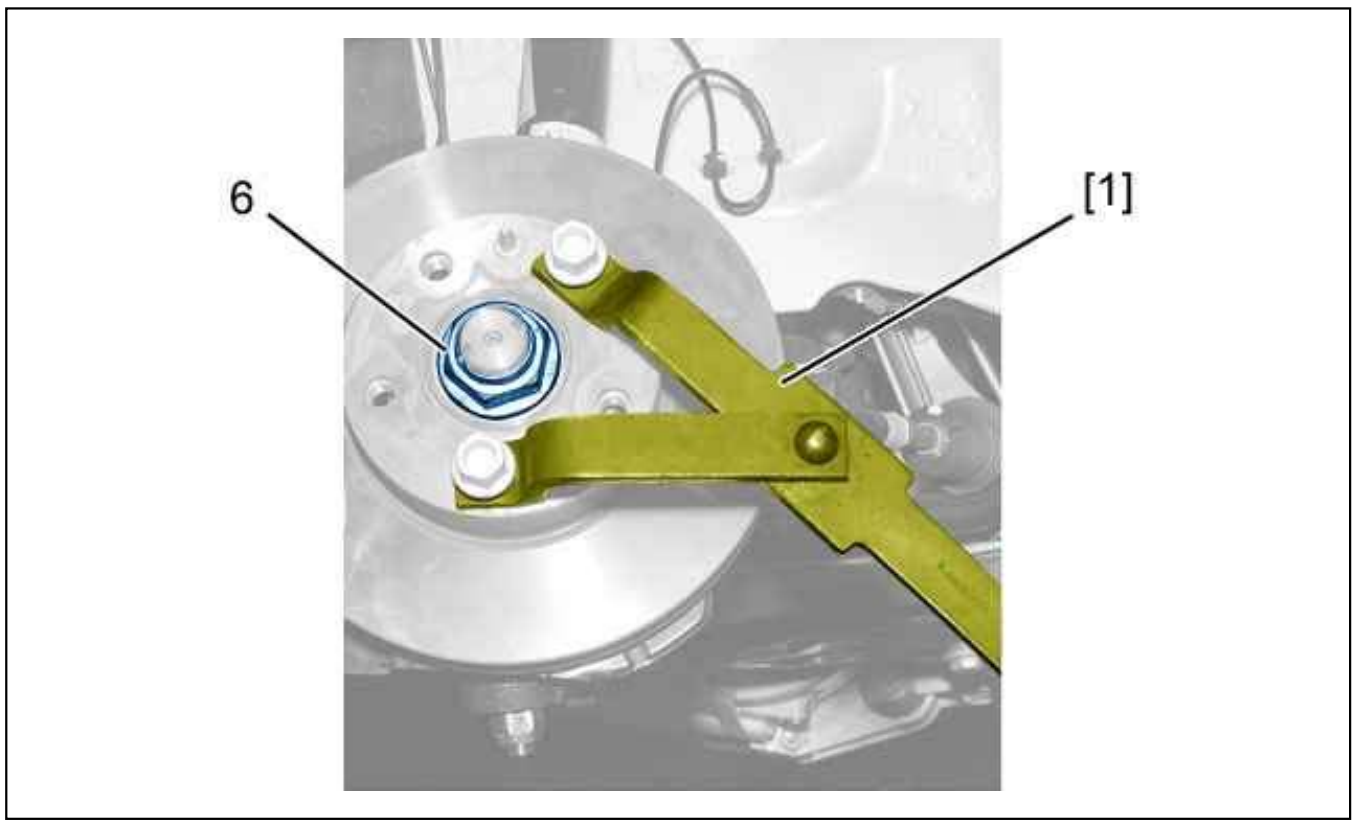

Figure : B3FP7MCD

Immobilise the hub from rotation using tool [1].
Remove :

- The drive shaft nut (6)
- The tool [1]

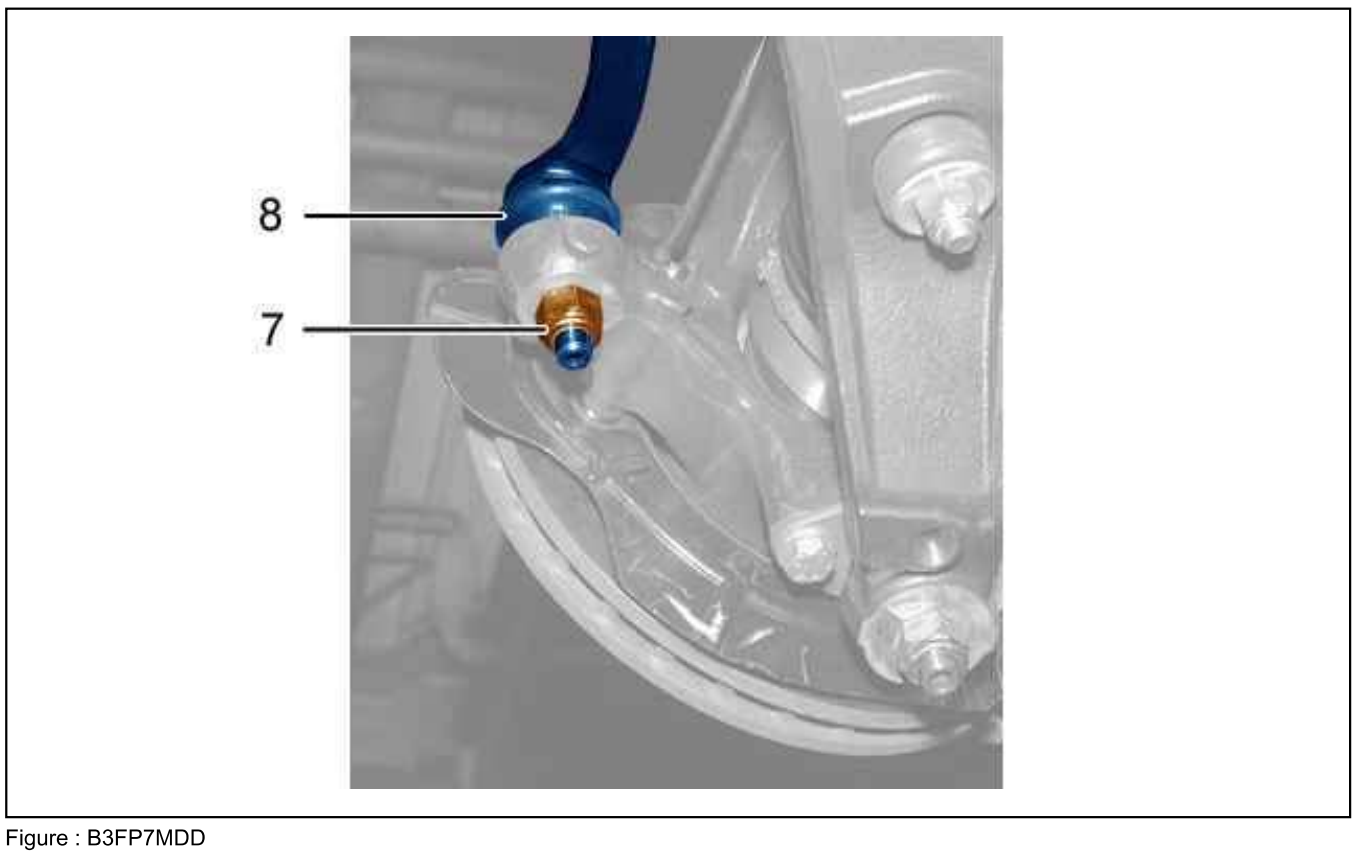

Figure : B3FP7MDD

Remove the nut (7).
Uncouple the steering ball-joint (8) ; Using tool [2].

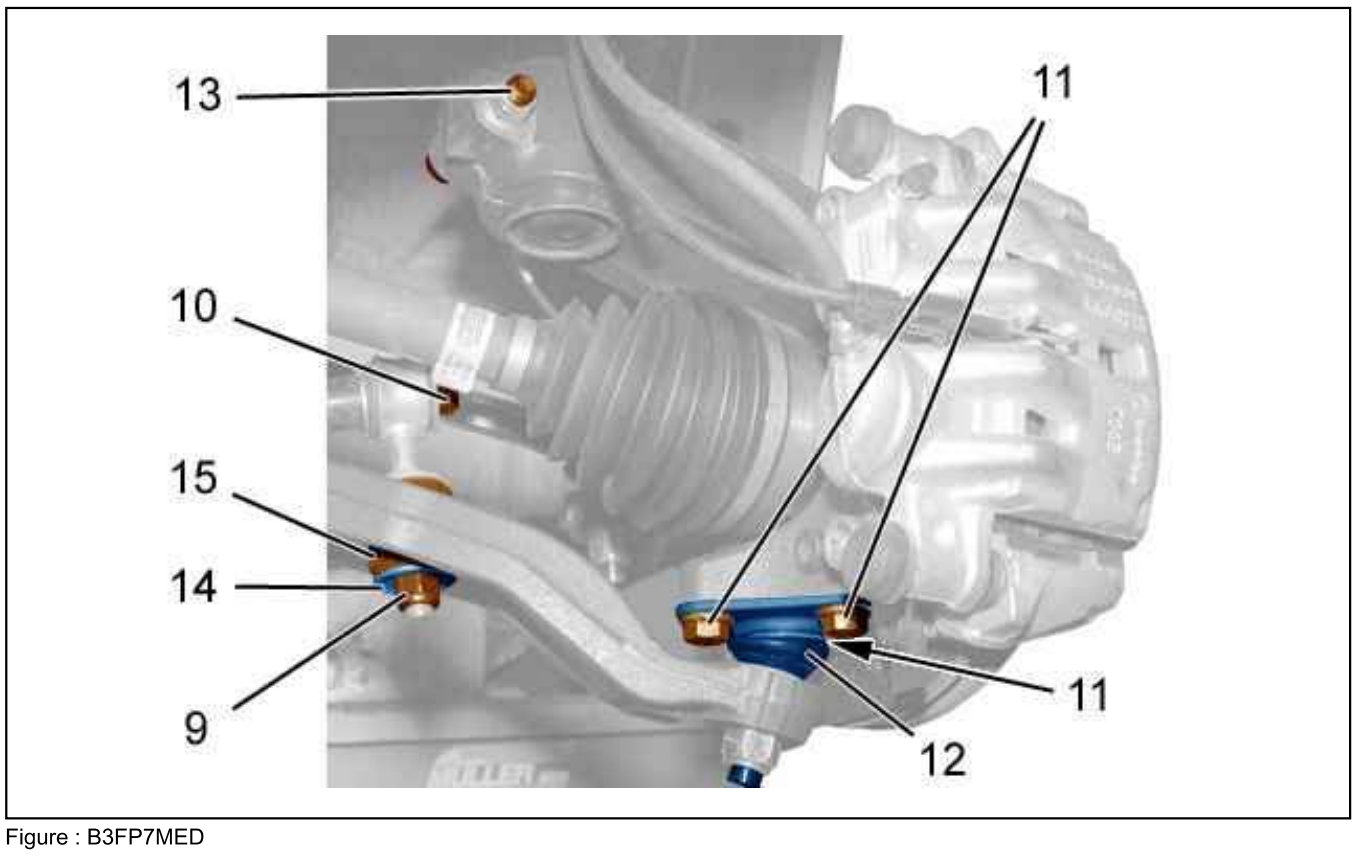

Figure : B3FP7MED

Remove :

- The nut (9)
- The washer (14)
- The silentblock (15)

Unscrew nut (10).
Remove the 3 bolts (11).
Disengage the ball-joint housing (12).
Remove bolts (13).

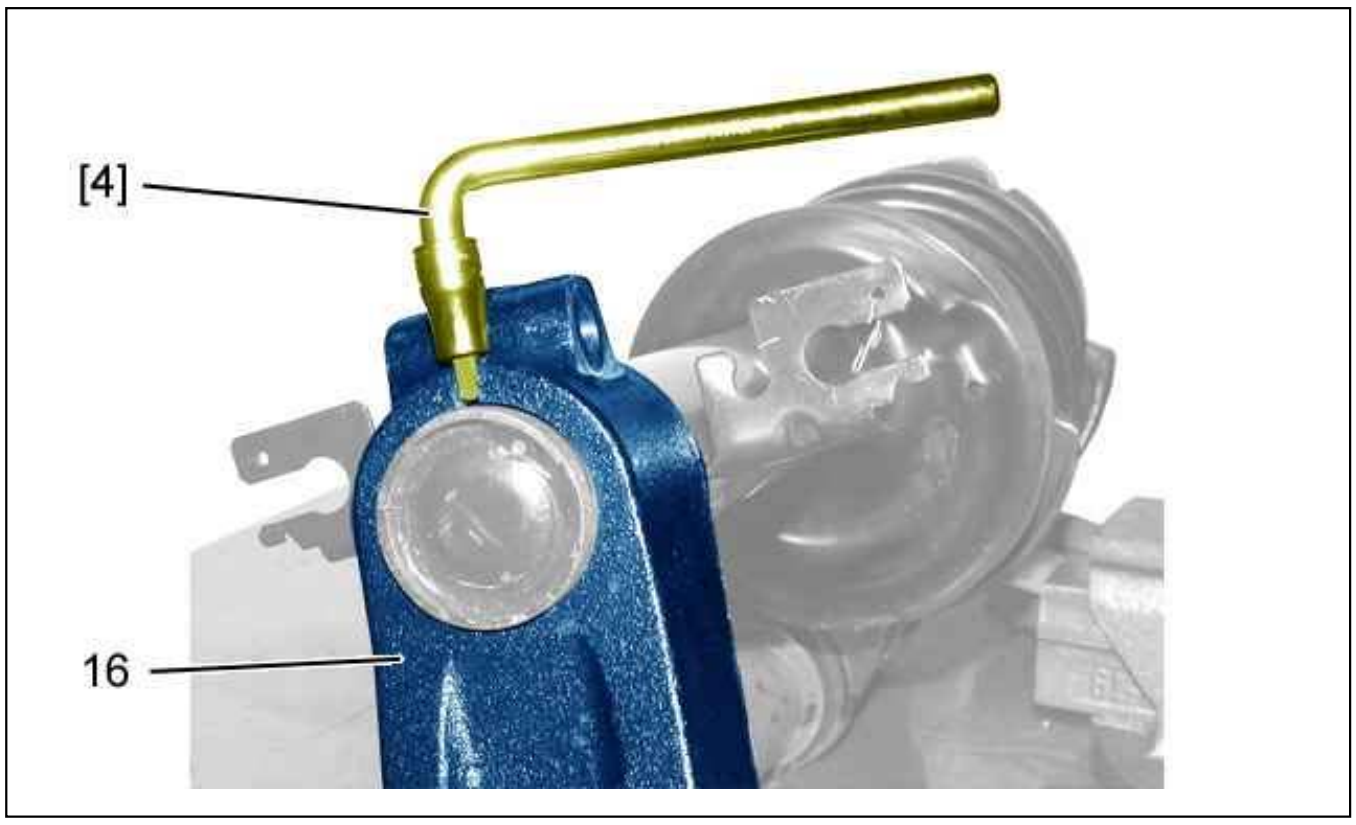

Figure : B3FP7MFD

Position the tool [4] in the front pivot opening .
Turn a quarter turn to open the pivot.
Uncouple the front pivot (16).
Remove the front pivot (16).
Remove the tool [4].

3. Refitting

Position the tool [[4]] in the front pivot opening .
Turn a quarter turn to open the pivot.
Engage the front pivot (16) on the suspension leg .
Refit bolt (13).
Remove the tool [4].
Tighten the bolt (13) to 12 ± 0,4 daN.m.
Position the ball-joint housing (12).
Refit the bolts (11).
Tighten the bolts (11) to 11,5 ± 0,4 daN.m.
Refit :

- The silentblock (15)
- The washer (14)
- The nut (9)

Couple up the steering ball-joint (8).
Refit the nut (7).
Tighten the nut (7) to 8 ± 0,7 daN.m.
Refit the driveshaft nut (6).
Immobilise the hub from rotation using tool [1].
Tighten the driveshaft nut : 47,5 ± 4,75 daNm.
Remove the tool [1].

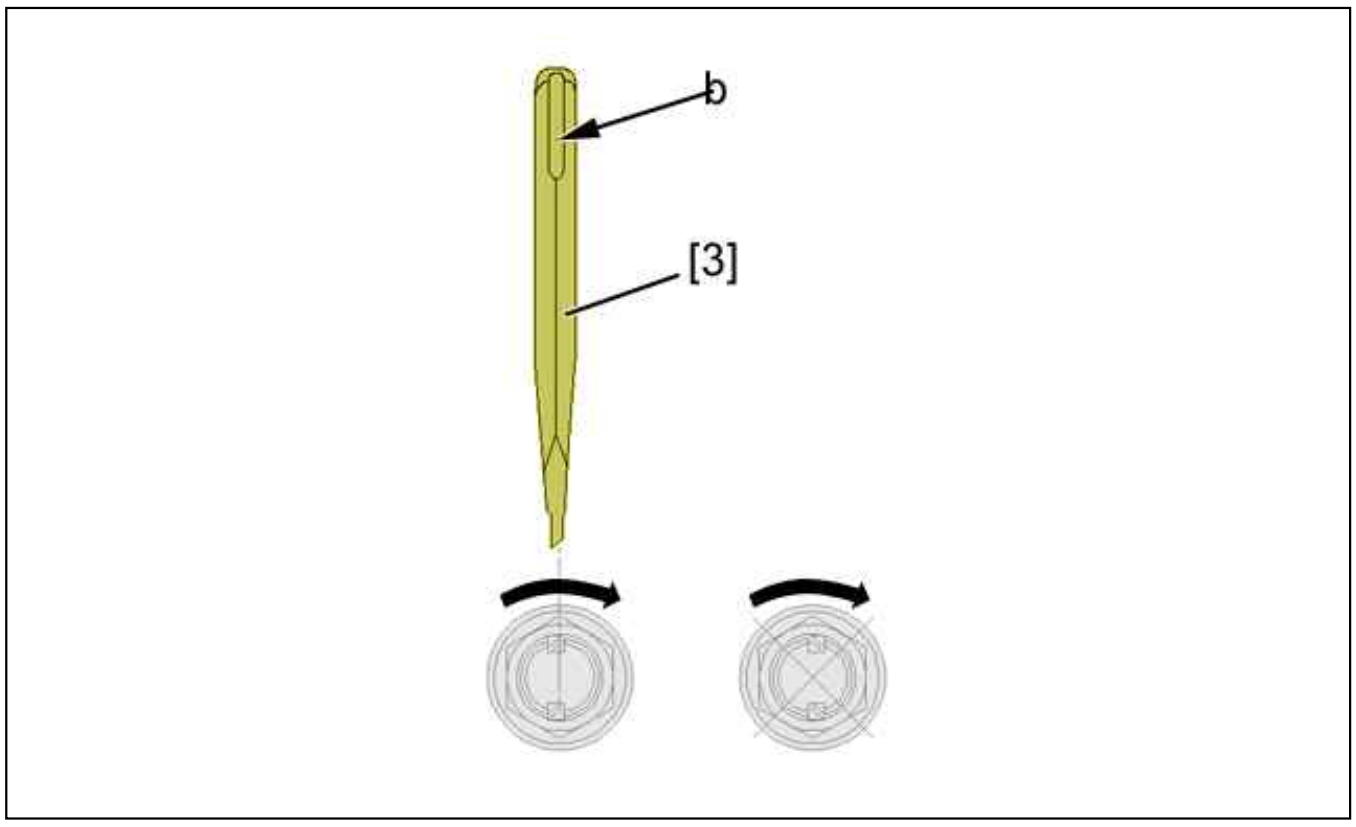

Figure : B2FP06MD

Lock each drive shaft nut with the help of tool [3].
The flat part "b" of the tool should always face outwards.

CAUTION : The nut collar must be locked in the opposite direction to tightening.

Refit :

- The brake caliper (5)
- The new bolt (4) (Pre-coated with a thread-locking product)

Tighten the bolt (4) to 3,4 ± 0,2 daN.m.
Reposition :

- The harness (at "a")
- The brake hose
- The clip (3)

Fit the brake pads (see the relevant operation).
Refit the wheel speed sensor (1) (see the relevant operation).
Tighten the bolt (2) to 0,8 ± 0,3 daN.m.
Reposition the harness of the wheel speed sensor .
Fit the wheels.
Return the vehicle to its wheels.
Tighten the nuts (9) and (10) to 5,6 ± 0,5 m.daN.
Tighten the wheel bolts .

REMOVING - REFITTING : FRONT HUB CARRIER BALL-JOINT

1. Recommended tools

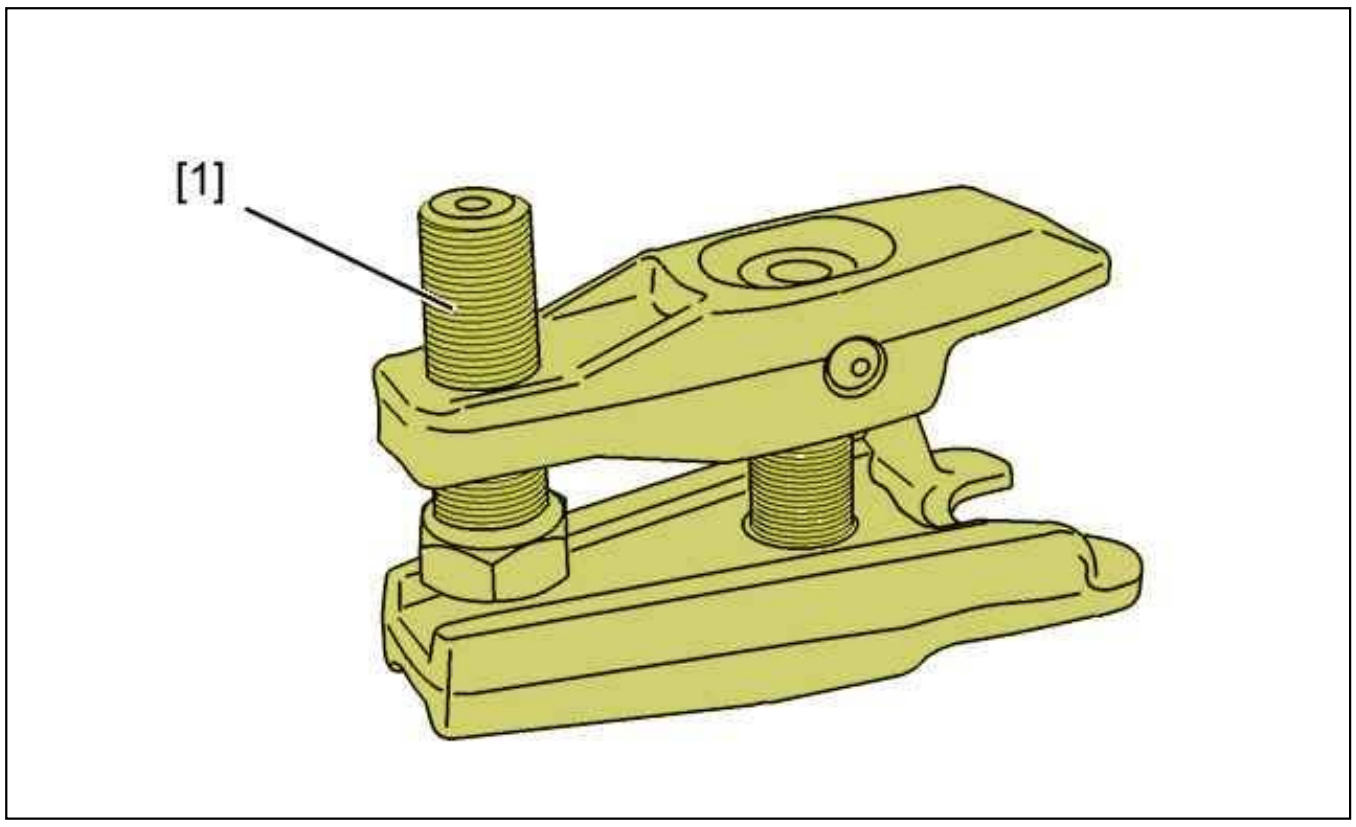

Figure : E5AP2WYD

Reference	Designation	Reference	Reference
[1]	ball-joint extractor	5707-T	(-).0919

2. Removing

Untighten the wheel screws (front).
Lift and support the vehicle with front wheels suspended.
Remove the front wheels.

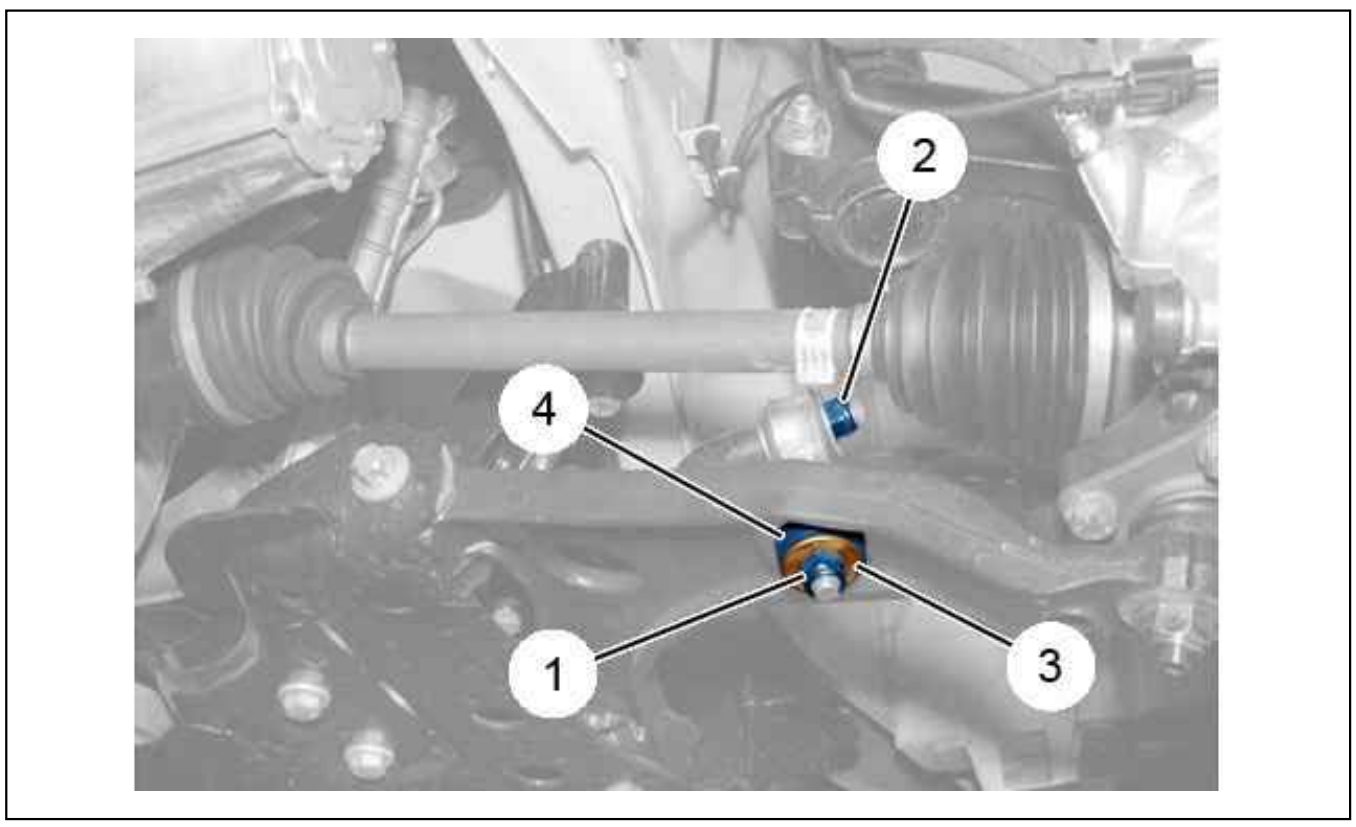

Figure : B3CP0BLD

Remove :

- The nut (1)
- The washer (3)
- The silentblock (4)

Unscrew nut (2).

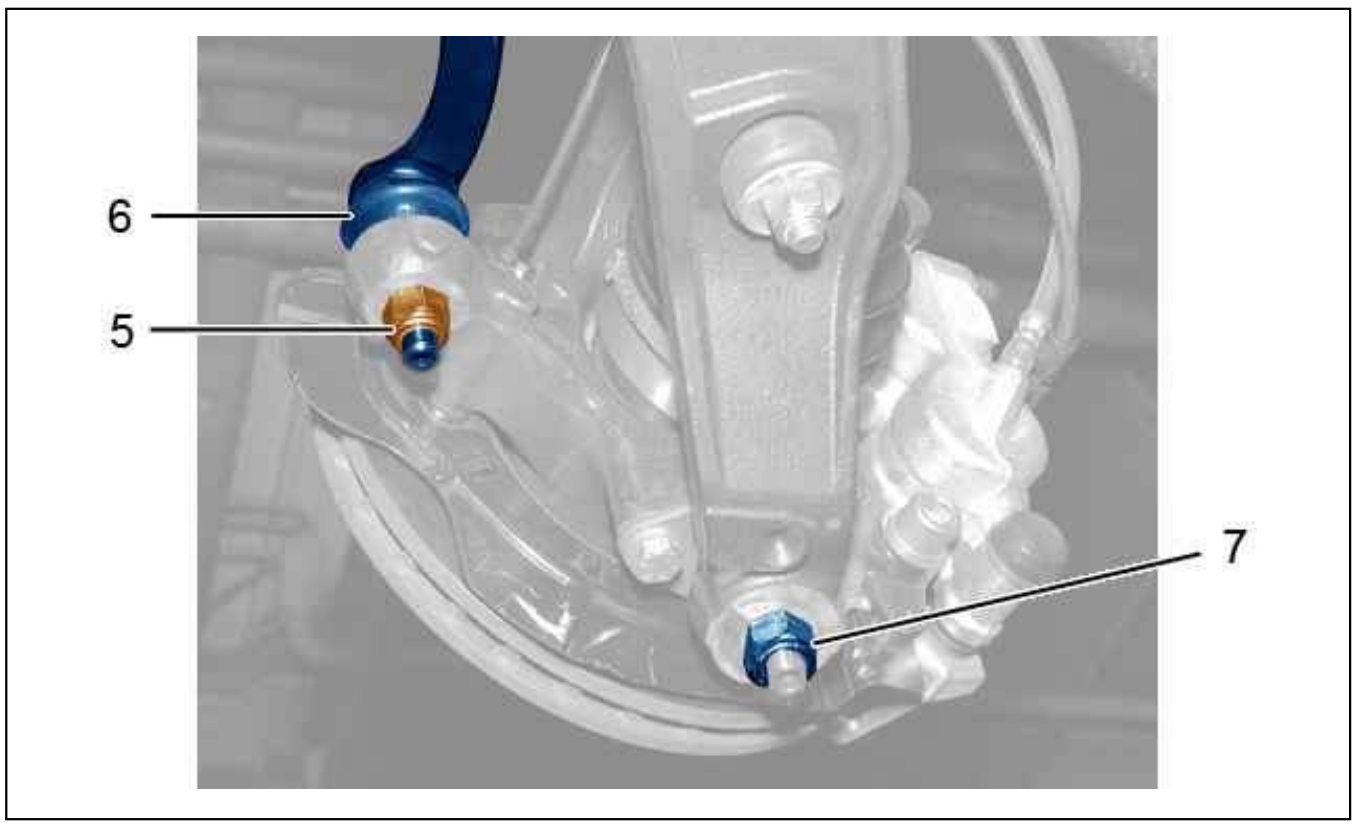

Figure : B3FP7L0D

Remove the nut (5).
Uncouple the steering ball-joint (6) ; Using tool [1].
Remove the nut (7).

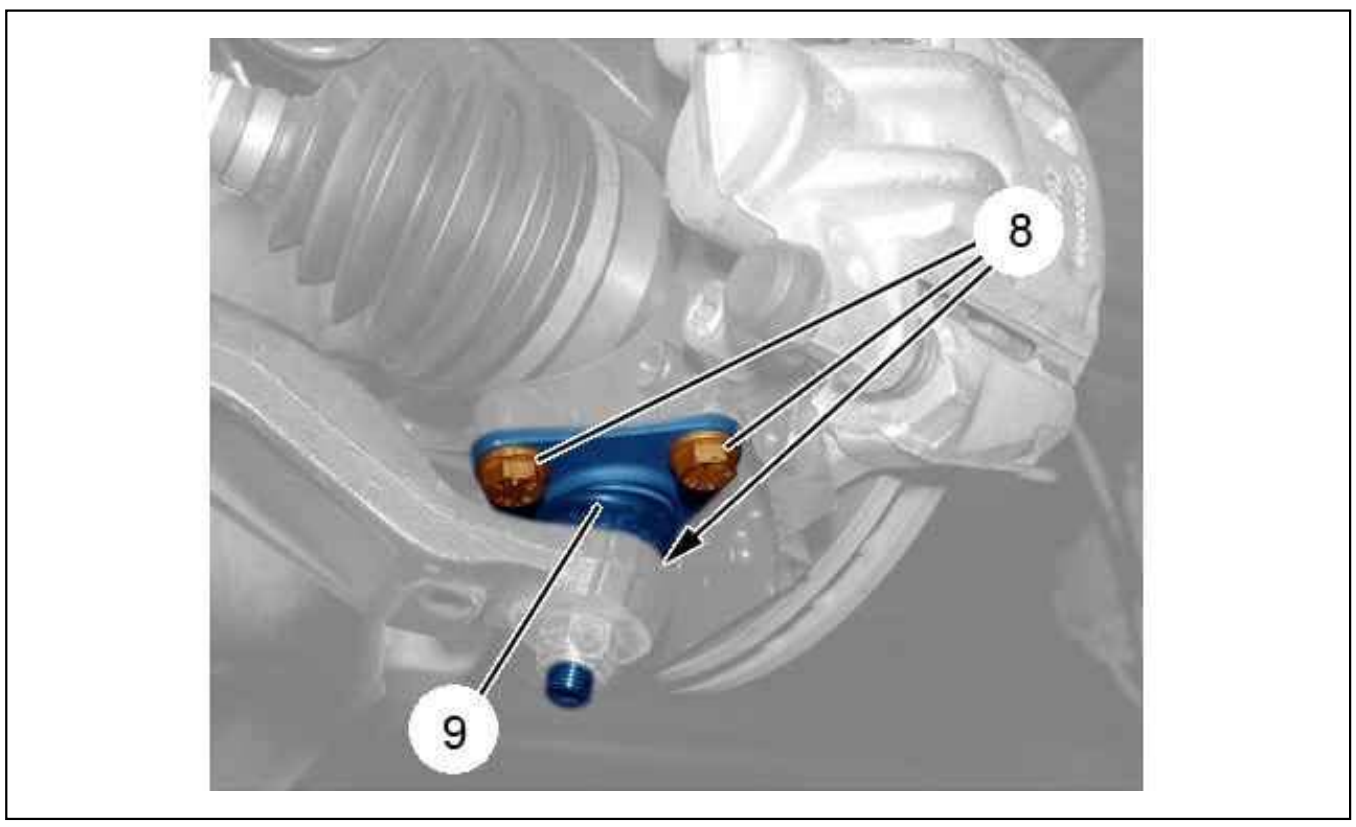

Figure : B3FP7L1D

Slacken the 3 screws (8) of the ball-pin casing.
Uncouple the front pivot ball-joint (9) ; Using tool [1].
Remove the bolts (8).
Move aside the front pivot .
Remove the front hub carrier ball-joint (9).

3. Refitting

ESSENTIAL : Always fit new Nylstop nuts.

Refit the front pivot ball-joint (9) on the arm .
Position the front pivot .
Fit the bolts (8).
Tighten :

- The 3 bolts (8) to 11,5 ± 0,4 daN.m
- The nut (7) to 15 ± 0,5 daN.m

Couple up the steering ball-joint (6).
Refit the nut (5) ; Tighten to 8 ± 0,7 daN.m.
Refit :

- The silentblock (4)
- The washer (3)
- The nut (1)

Fit the wheels.
Return the vehicle to its wheels.
Tighten the nuts (1) and (2) to 5,6 ± 0,5 m.daN.
Tighten the wheel bolts .

OVERHAUL : PIVOT

ESSENTIAL : Observe the safety and cleanliness recommendations.

1. Recommended tools

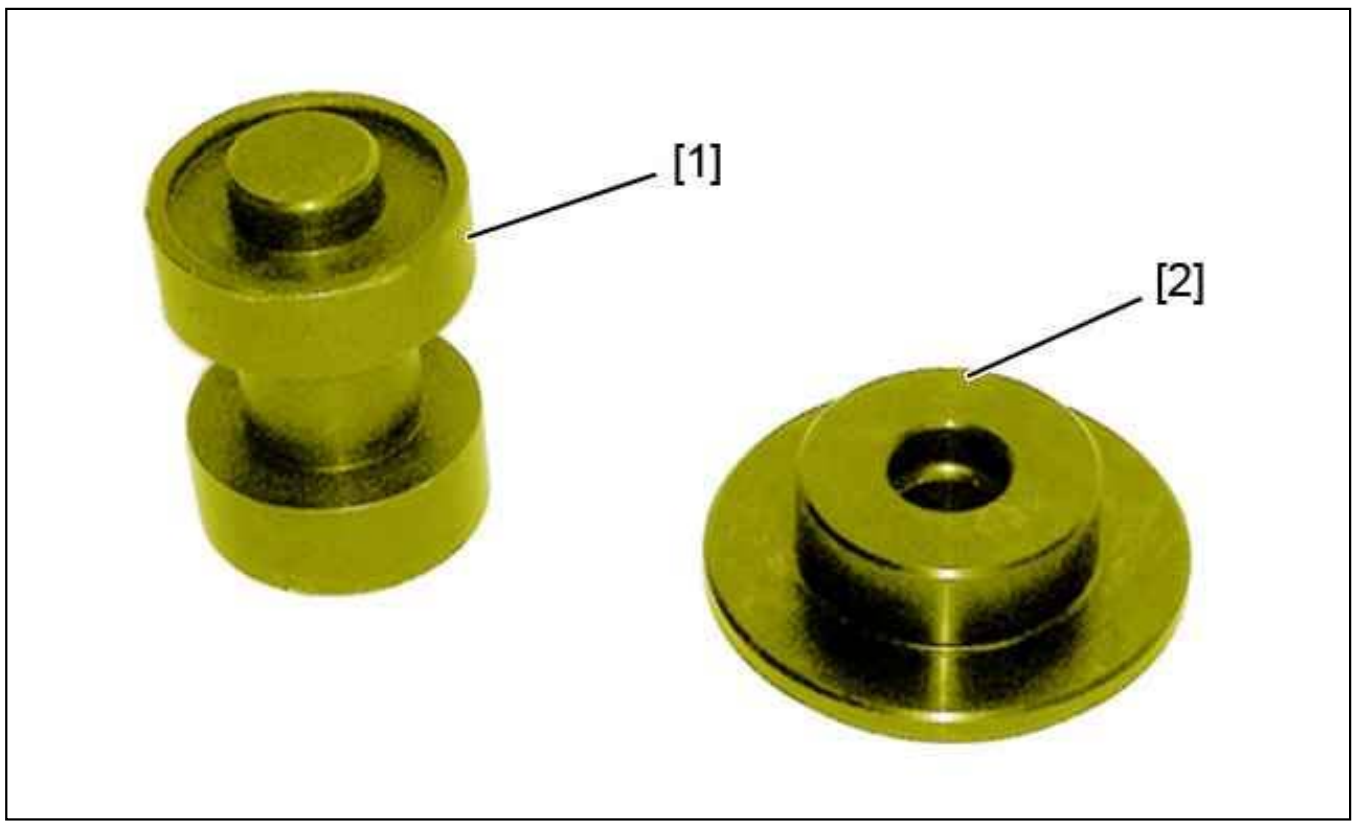

Figure : E5AP3K8D

Reference	Designation	Reference	Reference
[1]	bearing removal tool	9501-T.E4	(-).0526-X
[2]	bearing removal tool	5709-T.L1	(-).0619-L1

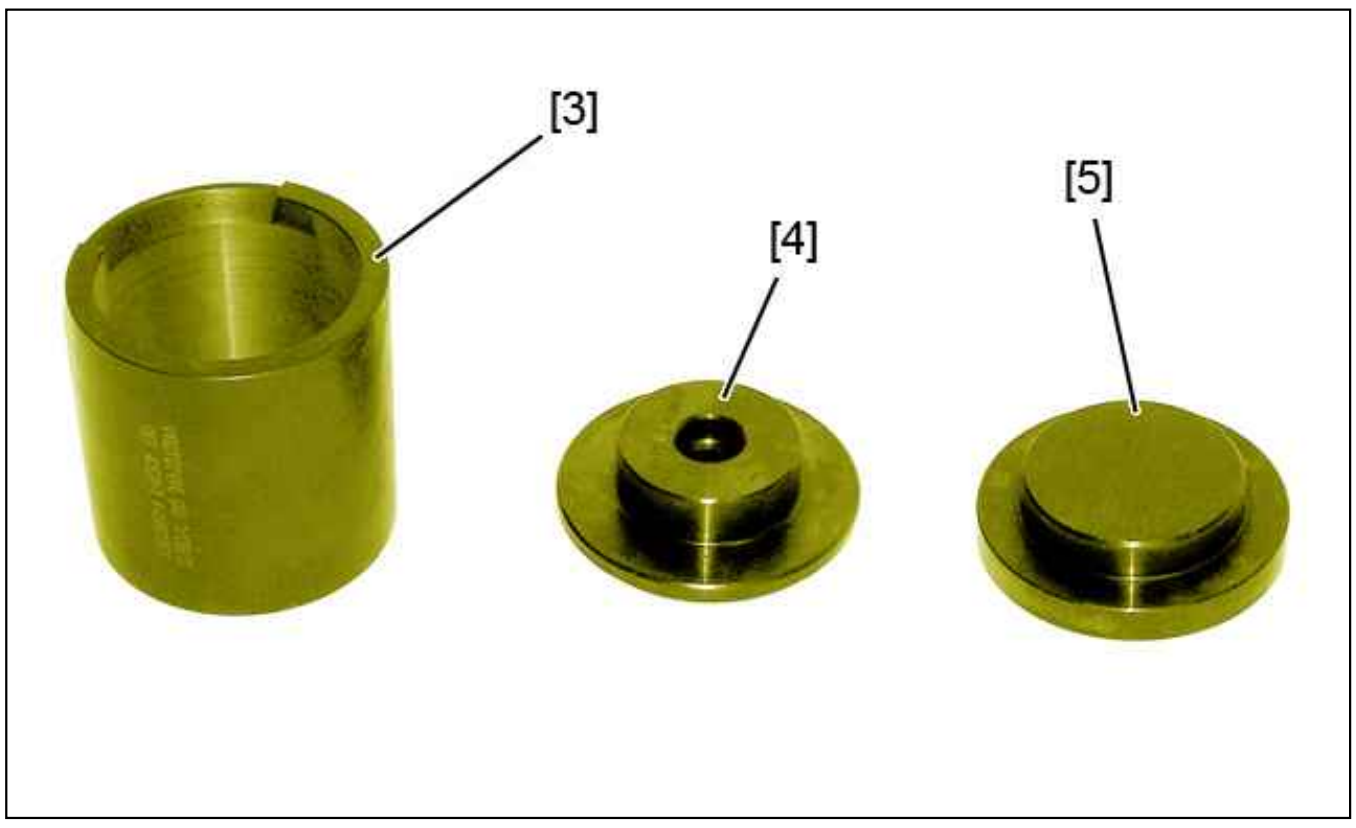

Figure : E5AP3K9D

Reference	Designation	Reference	Reference
[3]	Housing	4702-T.CZ	(-).0551-CZ
[4]	bearing refitting/fitting tool	5709-T.P2	(-).0619-P2
[5]	bearing fitting tool	5709-T.L2	(-).0619-L2

2. Removing

Remove :

- The swivel (see the relevant operation)
- The brake disc (see the relevant operation)

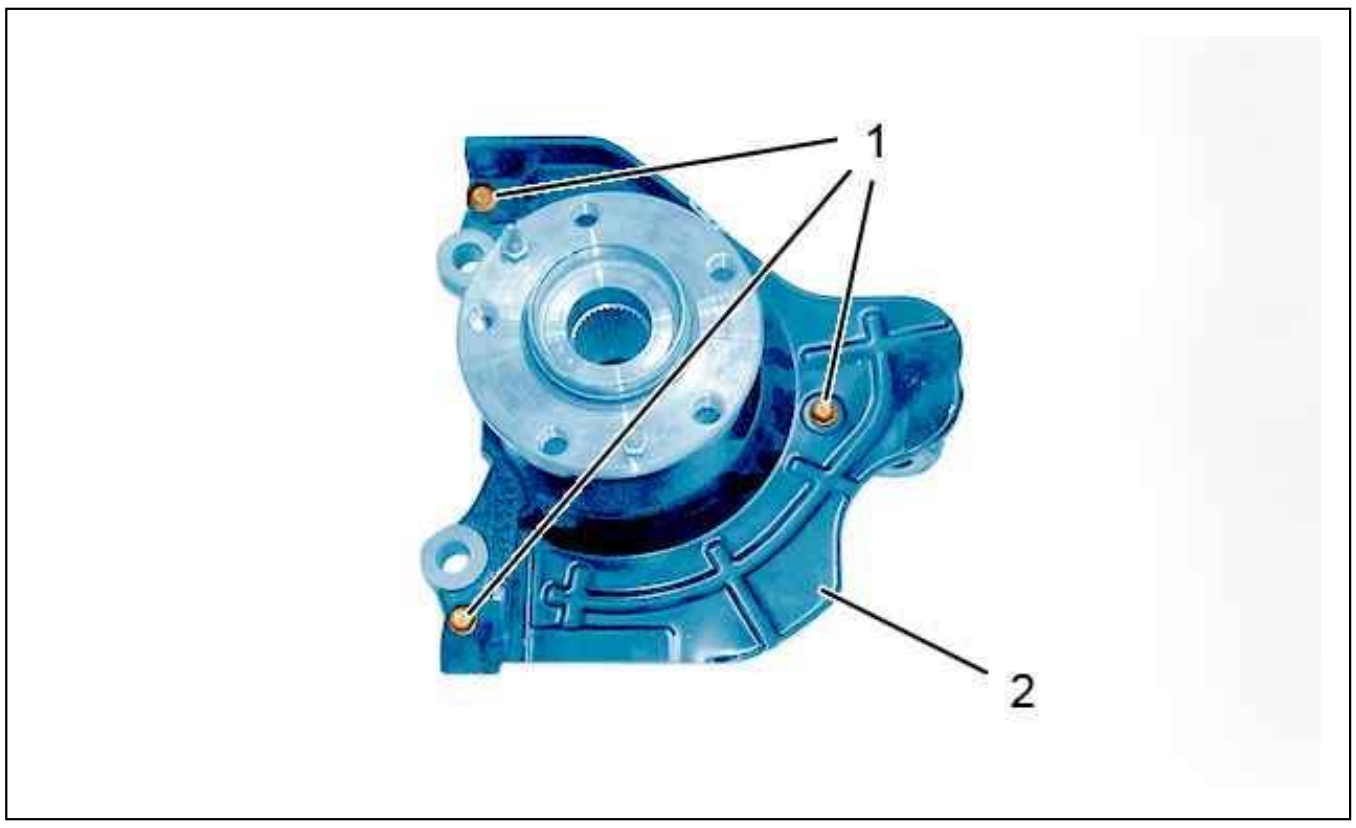

Figure : B3CP0EMD

Remove :

- The bolts (1)
- The heat shield (2)

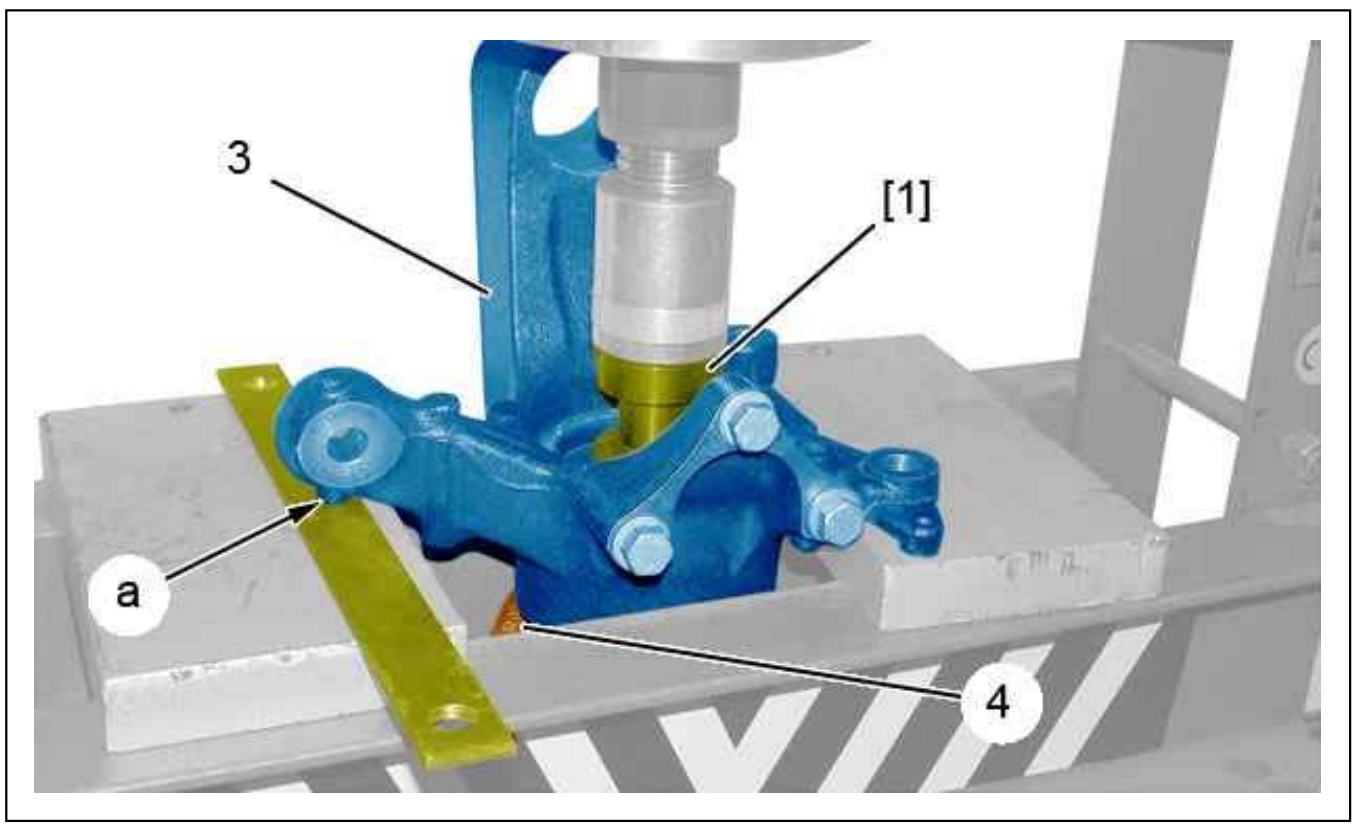

Figure : B3CP0END

Position the pivot (3) using a press ; Insert a 5 mm shim at "a".
Remove pivot (4) hub (3) ; Using tool [1].

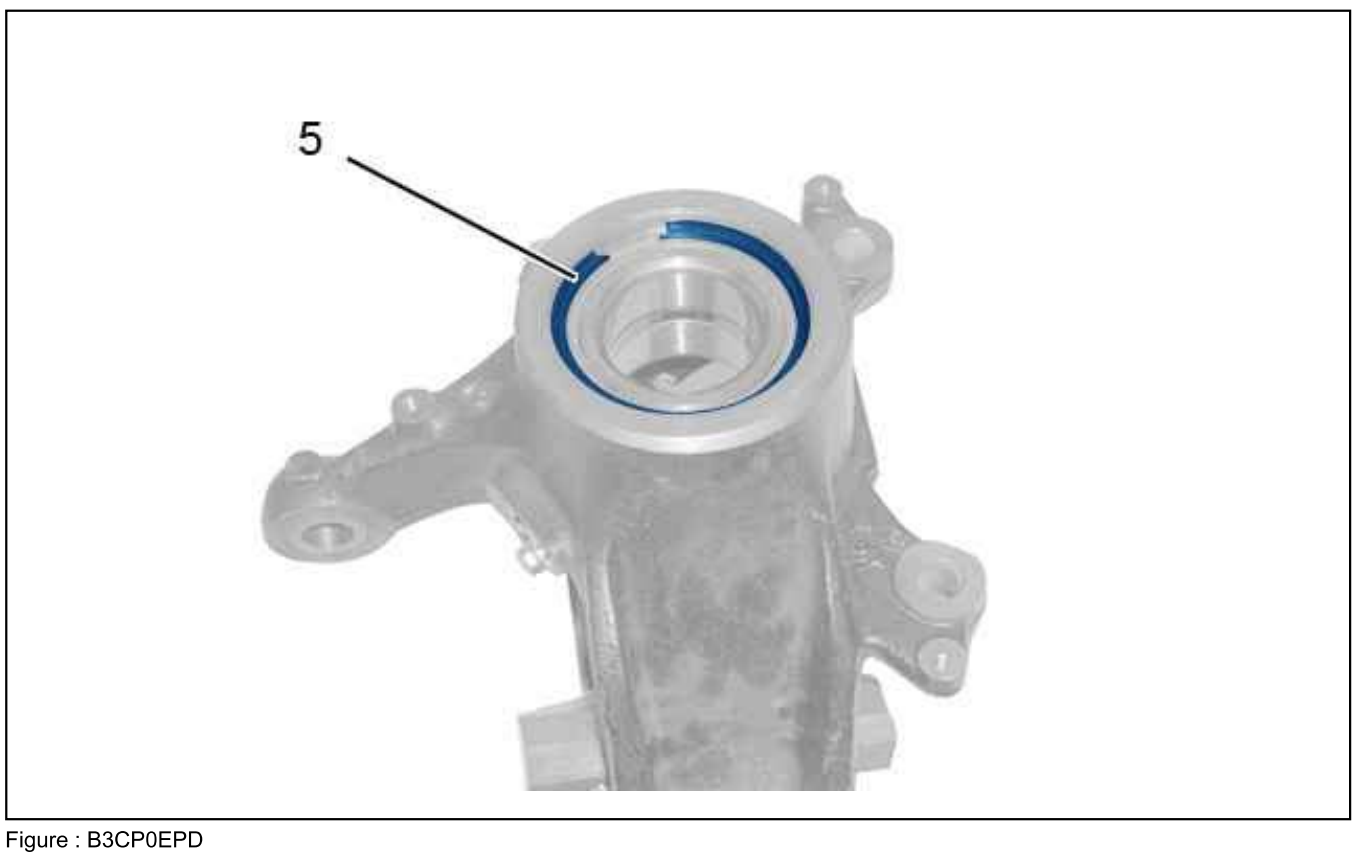

Figure : B3CP0EPD

Remove circlip (5).

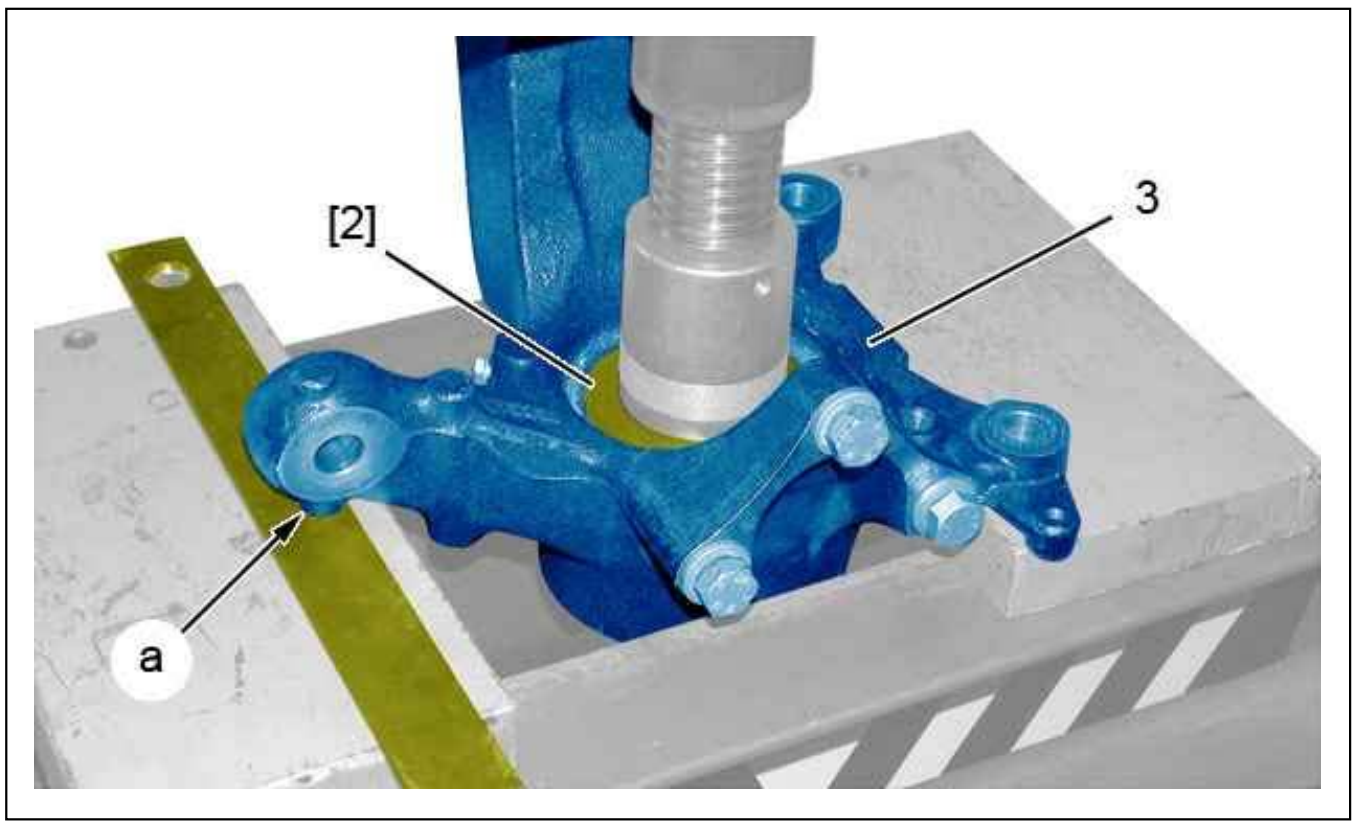

Figure : B3CP0EQD

Position the pivot (3) using a press ; Insert a 5 mm shim at "a" (at "a").
Fit the tool [2].
Extract the bearing using a press.

3. Refitting

ESSENTIAL : Use a new hub bearing and new circlip ; Oil the bearing housing in the pivot and the hub itself ; All parts must be clean and free from any of traces of abnormal wear or damage.

ESSENTIAL : Do not place a bearing with integrated magnetic wheel near a magnetic source or a source of contamination by metallic particles.



Figure : B3CP0ERD

" b" : Face of the bearing with integrated magnetic wheel.

CAUTION : Fit the bearing face " b" towards the driveshaft.

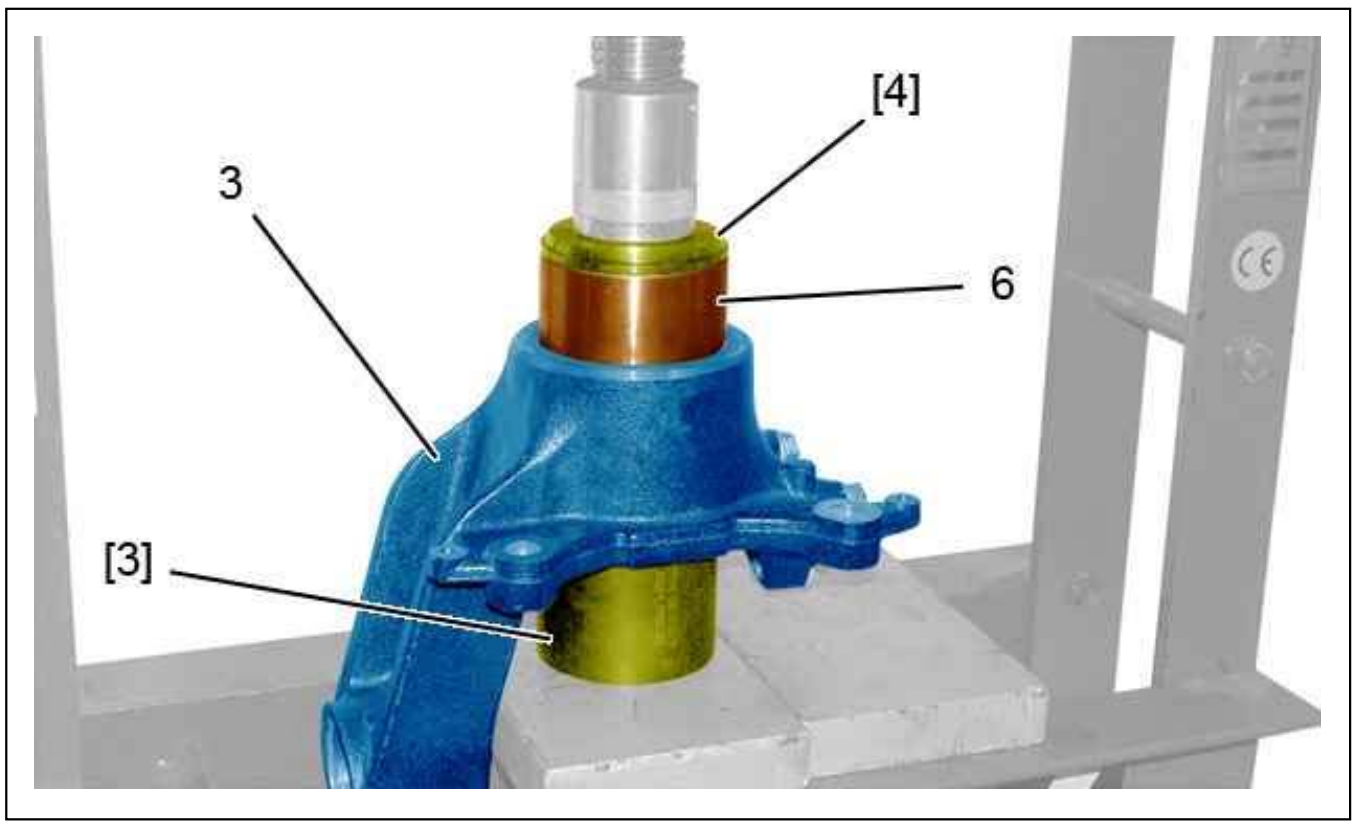

Figure : B3CP0ESD

Fit the tool [3].
Position the hub carrier (3) on the tool [3].
On the press, fit the bearing (6) fully into place ; Using tool [4].

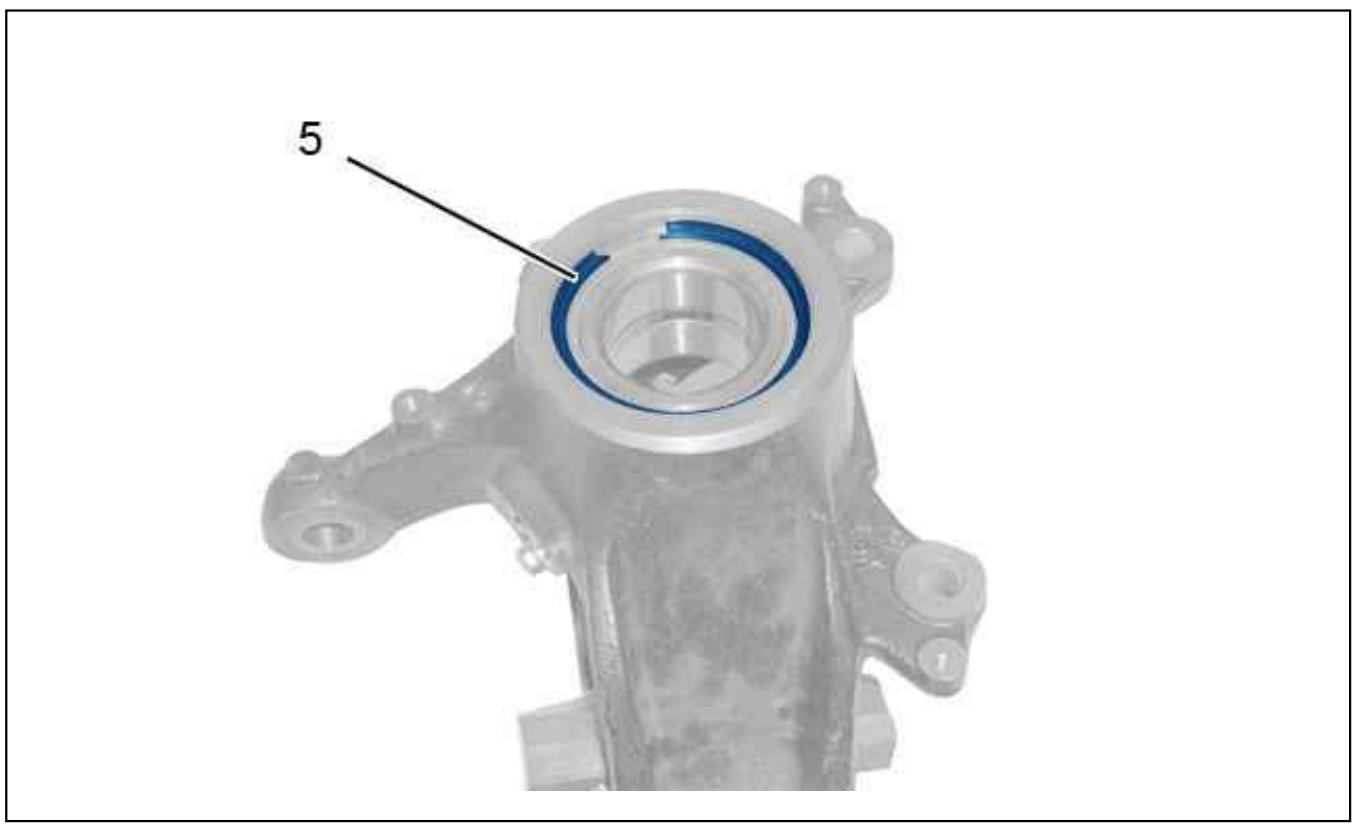

Figure : B3CP0EPD

Fit a new circlip (5).

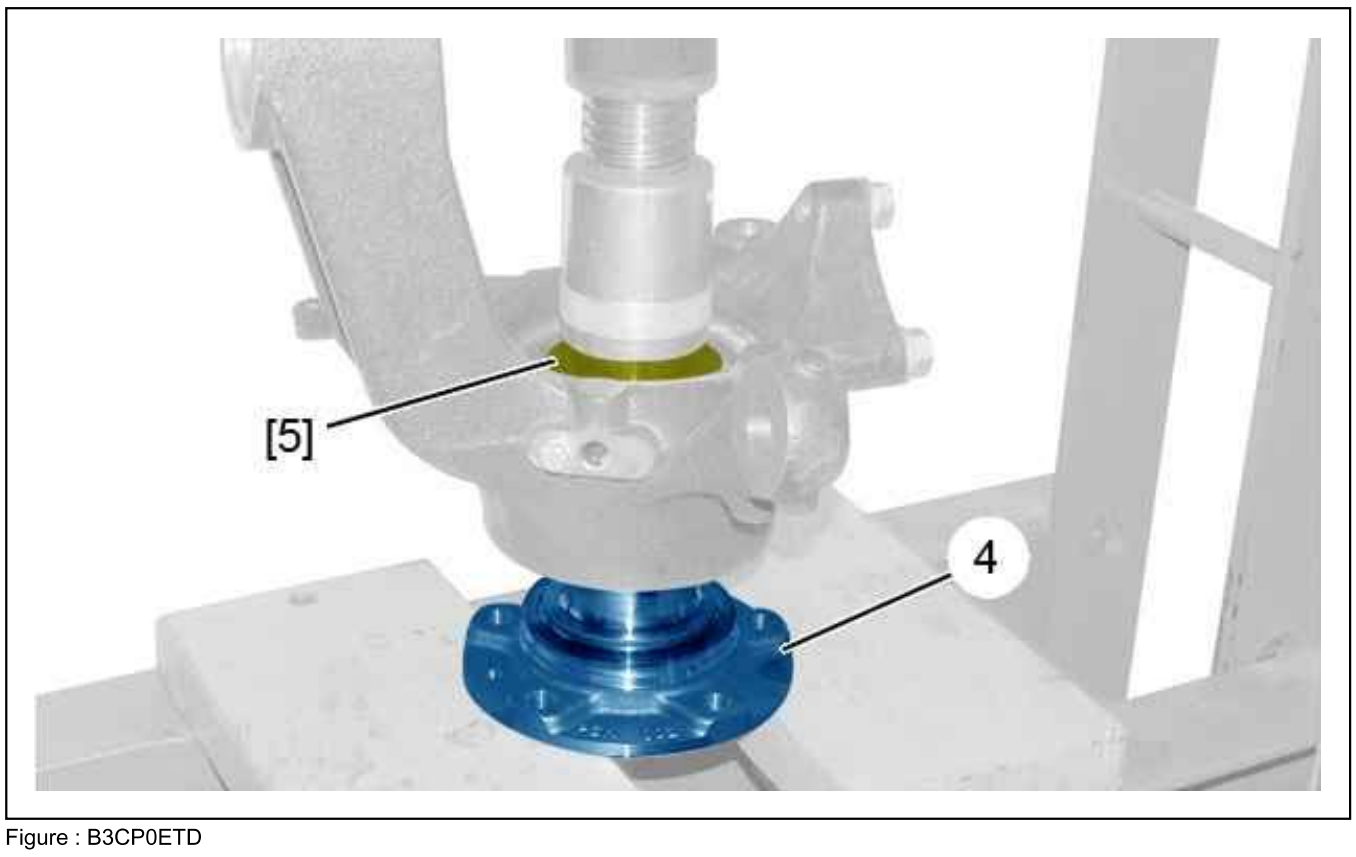

Figure : B3CP0ETD

Position the hub (4) and the pivot (3) using a press.
Fit the tool [5].
Refit the hub (4) to the stop.
Refit :

- The heat shield (2)
- The bolts (1) ; Tightening to 2,5 ± 0,7 daN.m
- The brake disc (see the relevant operation)
- The pivot to the vehicle (see the relevant operation)

MODIFICATION : TIGHTENING AND SLACKENING OF DAMPER NUTS PROHIBITED USING A PNEUMATIC GUN

1. Application

Any vehicle.

2. Identification

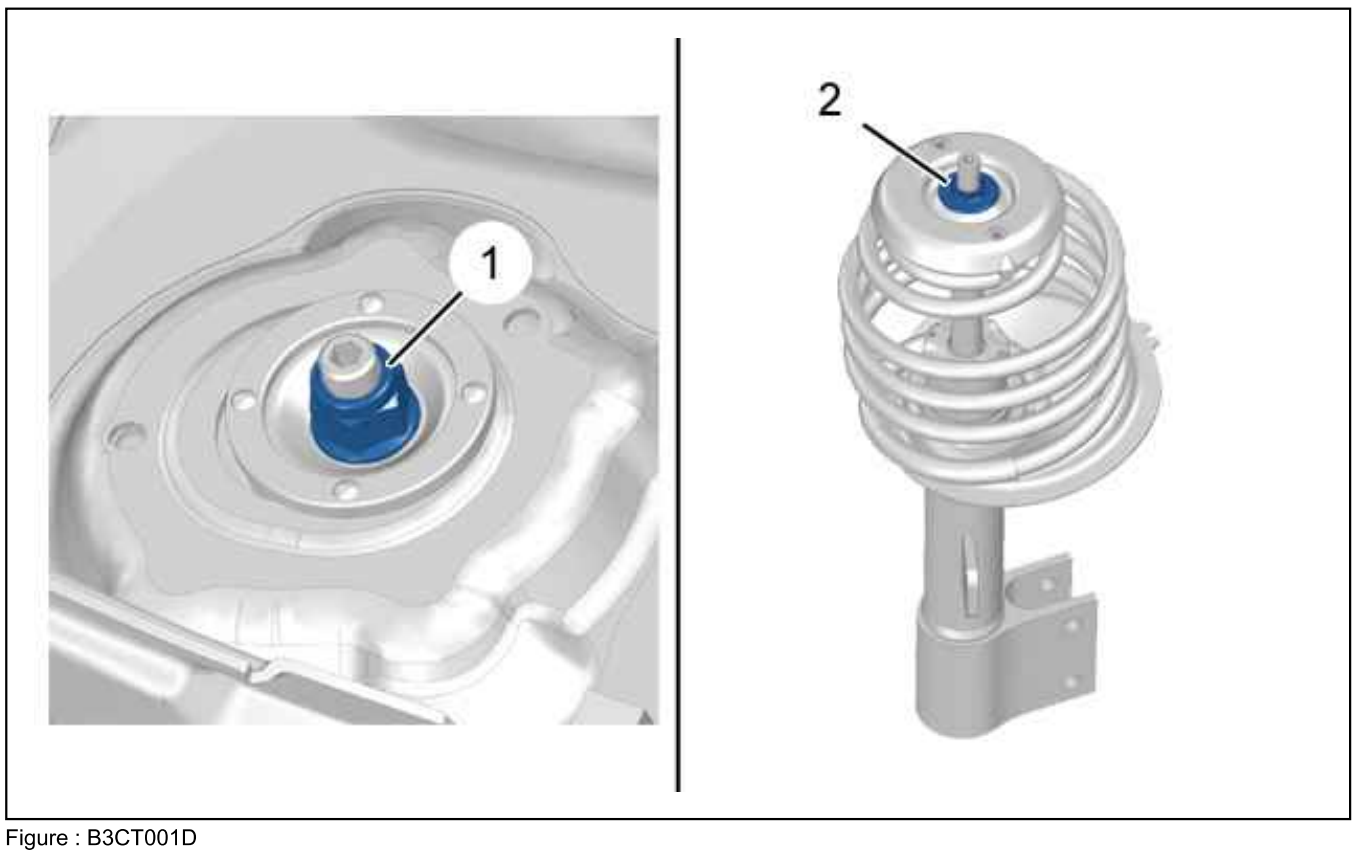

Figure : B3CT001D

Do not use a pneumatic gun in operations removing and refitting the nuts (1) and (2) of the damper.

3. Risks

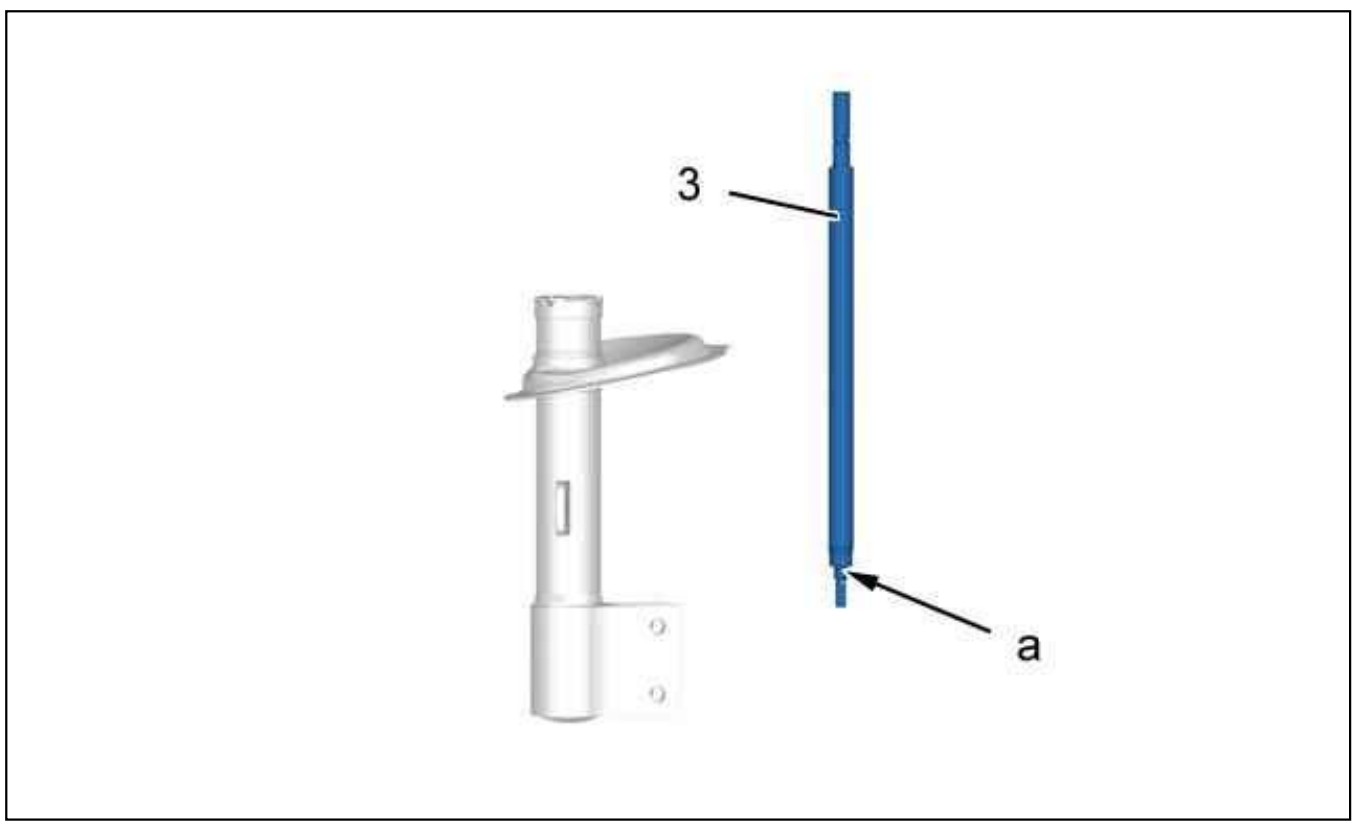

Figure : B3CT002D

Slackening and tightening the nuts using a pneumatic gun can carry the following risks :

- Slackening of the rod (3) of the damper during removal
- Damaging of the thread of the damper rod (at "a") during refitting

TIGHTENING TORQUES : REAR SUSPENSION

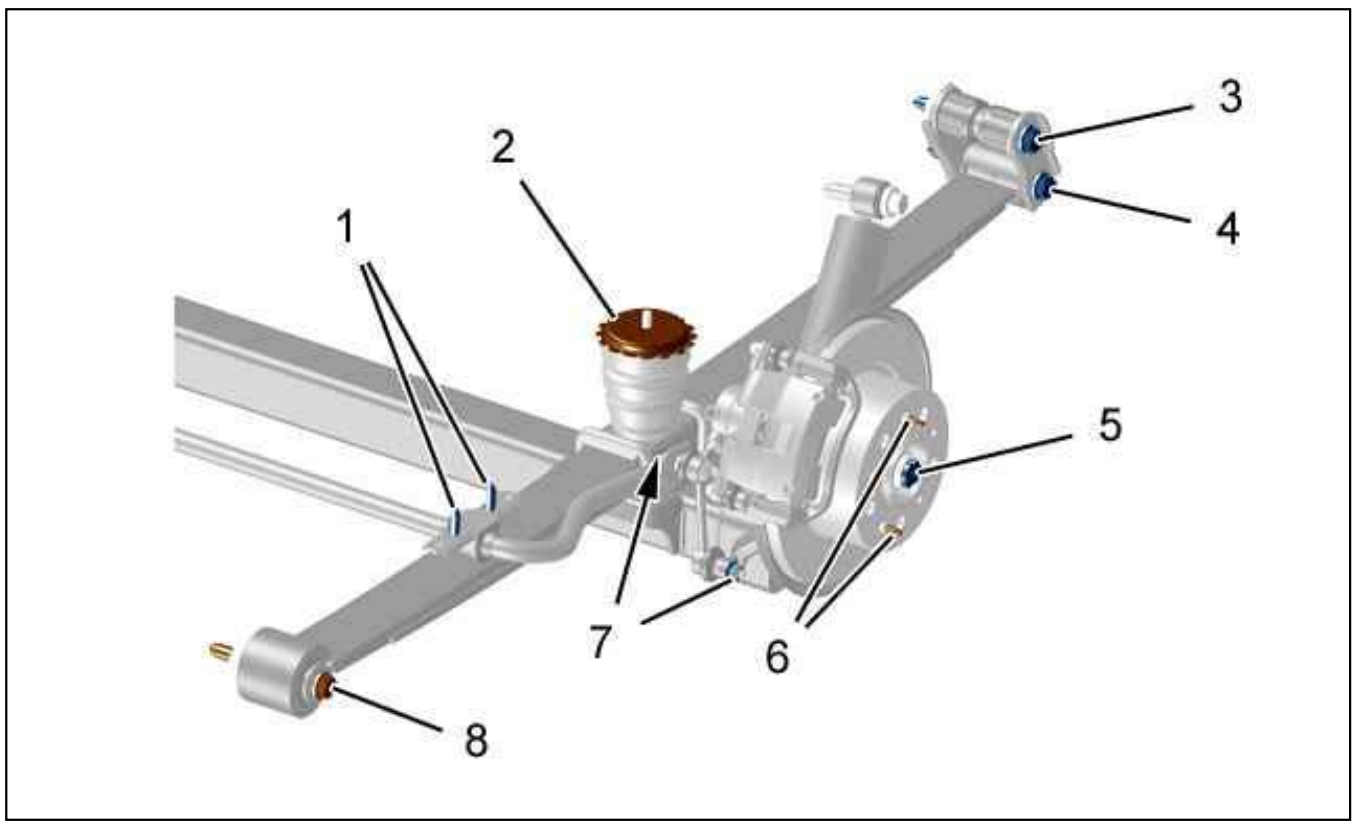

Figure : B3DP0E0D

Reference	Designation	Tightening torque
(1)	bolts - Anti-roll bar bearing	19 ± 0,8 daNm
(2)	Movement stop	3 ± 0,3 daNm
(3)	bolts - Suspension blade yoke	14,5 ± 1,2 daNm
(4)	bolts - Suspension blade	14,5 ± 1,2 daNm
(5)	Hub nut	45 ± 1,5 daNm
(6)	bolts - Rear brake disc	1,2 ± 0,1 daNm
(7)	nuts - Anti-roll bar rod	3 ± 0,8 daNm
(8)	bolts - Suspension blade	18,5 ± 2,9 daNm

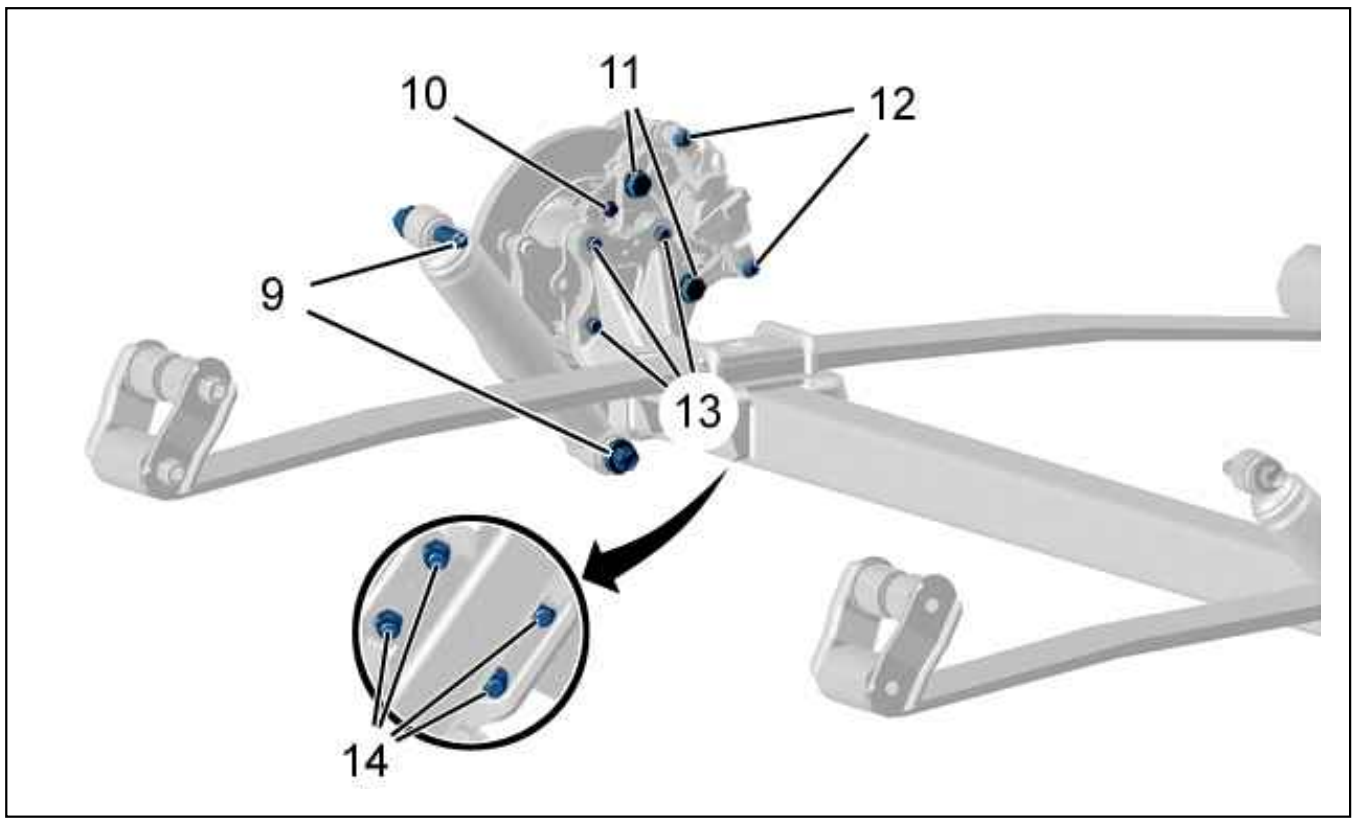

Figure : B3DP0E1D

Reference	Designation	Tightening torque
(9)	bolts - Rear damper	14,5 ± 1,2 daNm
(10)	bolts - Rear wheel sensor	0,8 ± 0,3 daNm
(11)	bolts - Rear brake caliper yoke	16 ± 0,5 daNm
(12)	bolts - rear brake caliper	3 ± 0,3 daNm
(13)	bolts - Stub axle on crossmember	20 ± 2 daNm
(14)	nuts - Suspension blade retaining clamp	13 ± 3,9 daNm

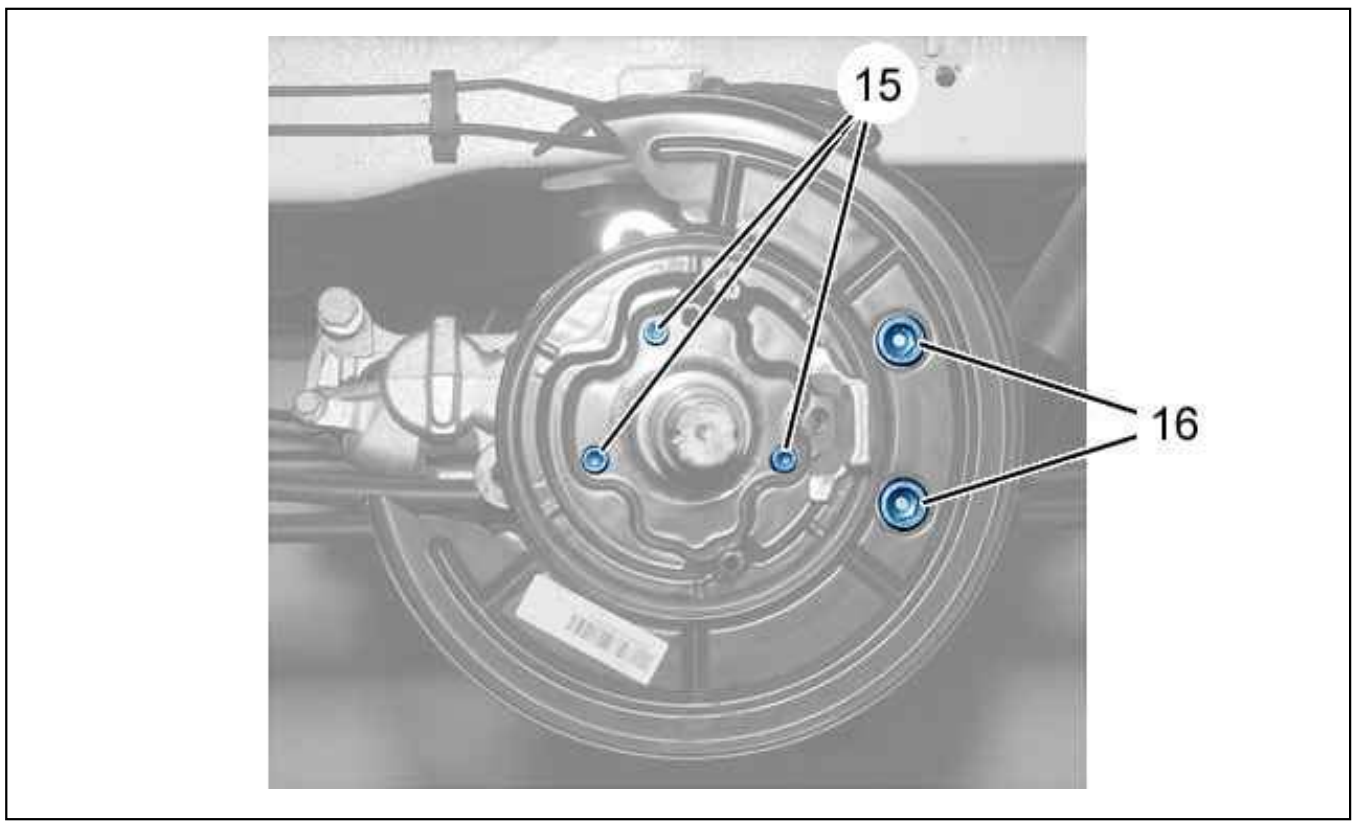

Figure : B3FP7MXD

Reference	Designation	Tightening torque
(15)	Handbrake on rear stub axle fixing	2,5 ± 2 daNm
(16)	bolts - Handbrake shoes support	20 ± 0,8 daNm

GENERAL SPECIFICATIONS : REAR SUSPENSION - SUSPENSION

1. Rear suspension

1.1. On the mechanical suspension version

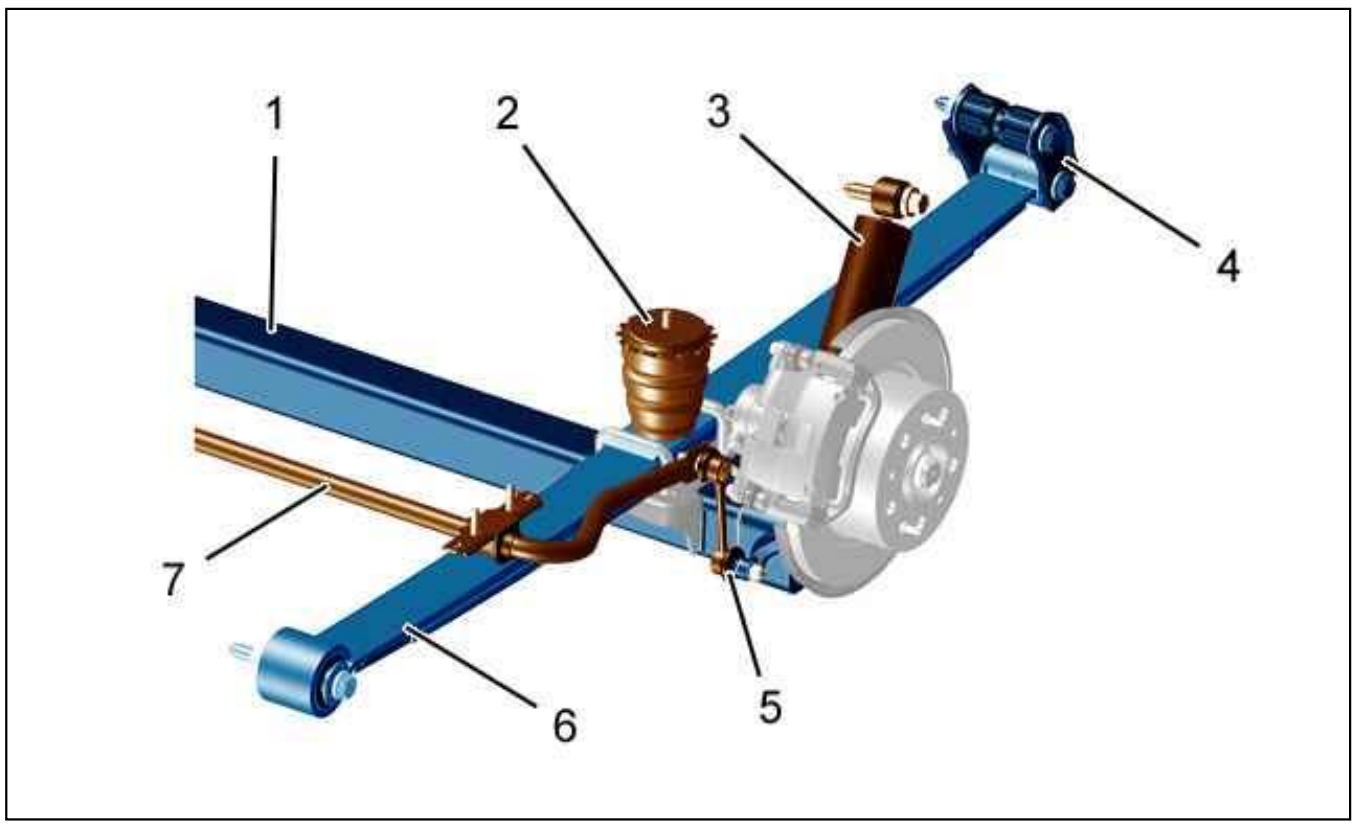

Figure : B3DP0EAD

Rear axle with leaf suspension and telescopic dampers.
(1) crossmember .
(2) Movement stop .
(3) damper.
(4) Suspension leaf lever.
(5) Anti-roll bar rod.
(6) Suspension blade (Single leaf or double leaf).
(7) Anti-roll bar .
2 crossmember widths :

- Crossmember for normal track : 1790 mm
- Crossmember for wide track : 1980 mm

1.2. With pneumatic suspension

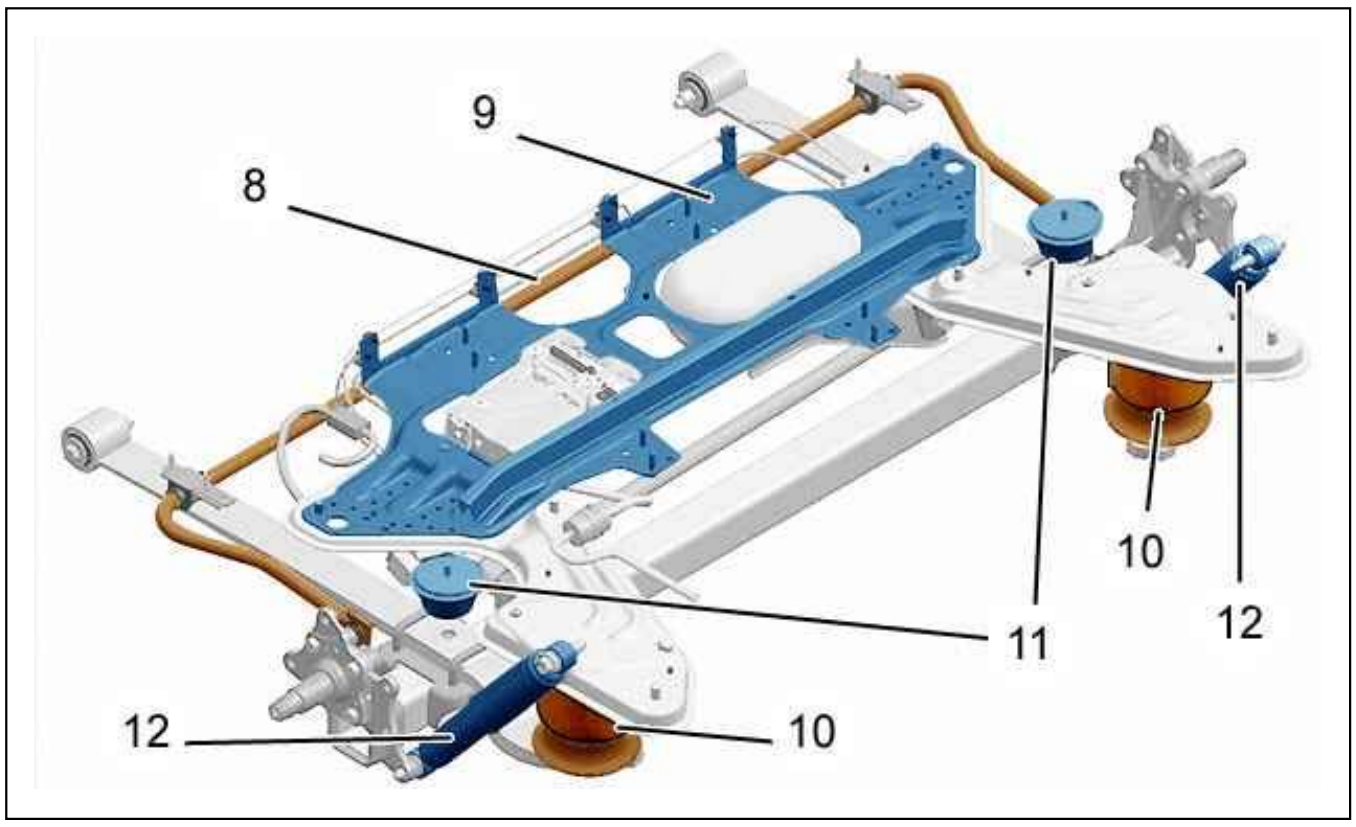

Figure : B3DM02PD

Rear axle with leaf suspension and telescopic dampers.
(8) Anti-roll bar .
(9) Pneumatic suspension unit mounting.
(10) Pneumatic spring .
(11) Movement stop .
(12) damper.

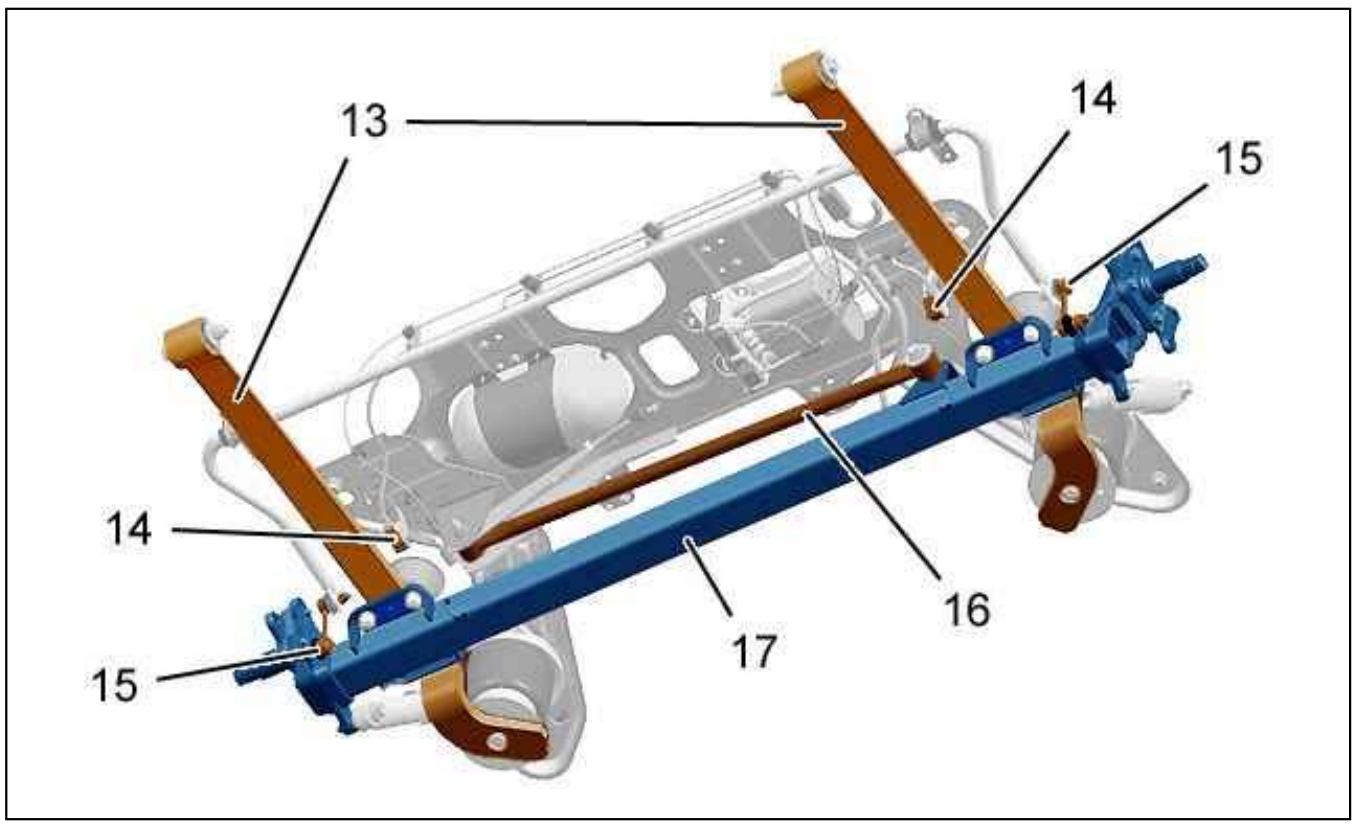

Figure : B3DM02QD

(13) Suspension blade.
(14) Body height sensor .
(15) Anti-roll bar rod.
(16) Rear stabiliser bar.
(17) crossmember .

1.3. Hub bearing

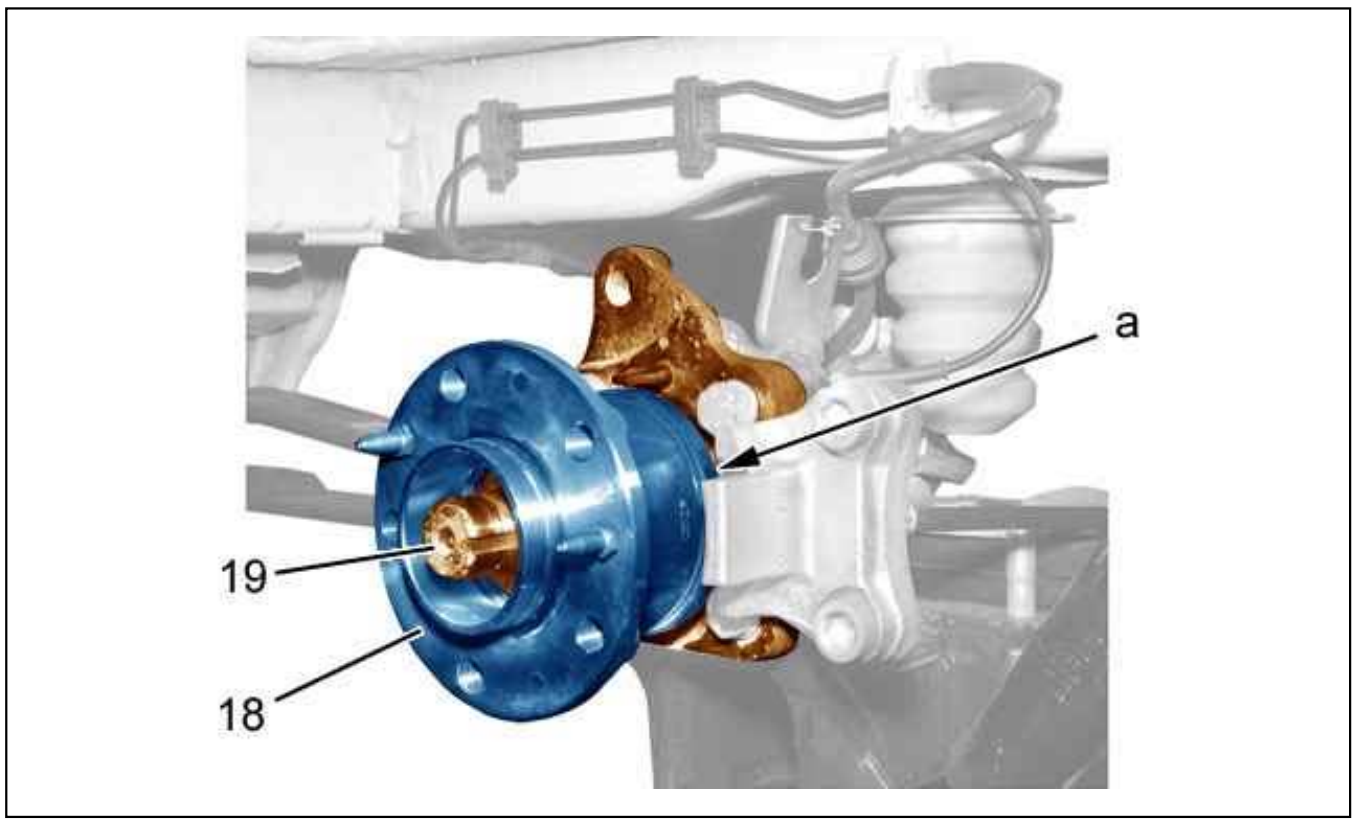

Figure : B3DM02RD

The hub bearing (18) is fitted free on the stub axle (19).
"a" : Magnetic target integral to the hub bearing.

1.4. Stub axle

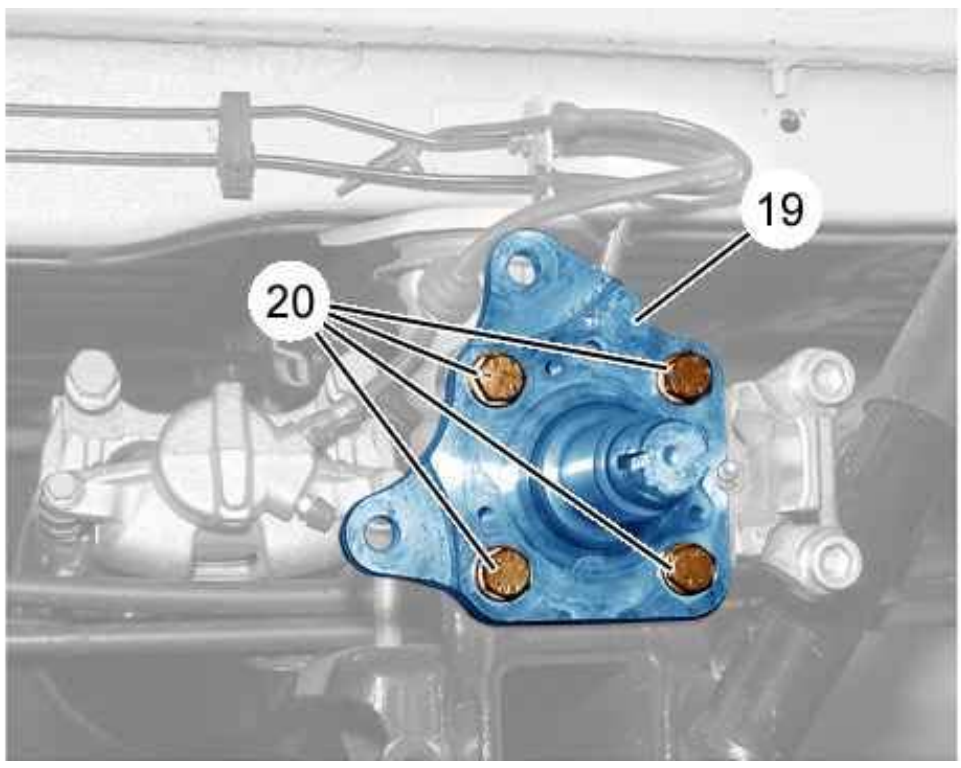

Figure : B3DM02SD

(19) Stub axle.
(20) bolts .
Stub axle (19) connected to the rear crossmember, fixed by four screws (20).
Stub axle diameter : 40 mm .

2. Pneumatic suspension

2.1. Body height sensor

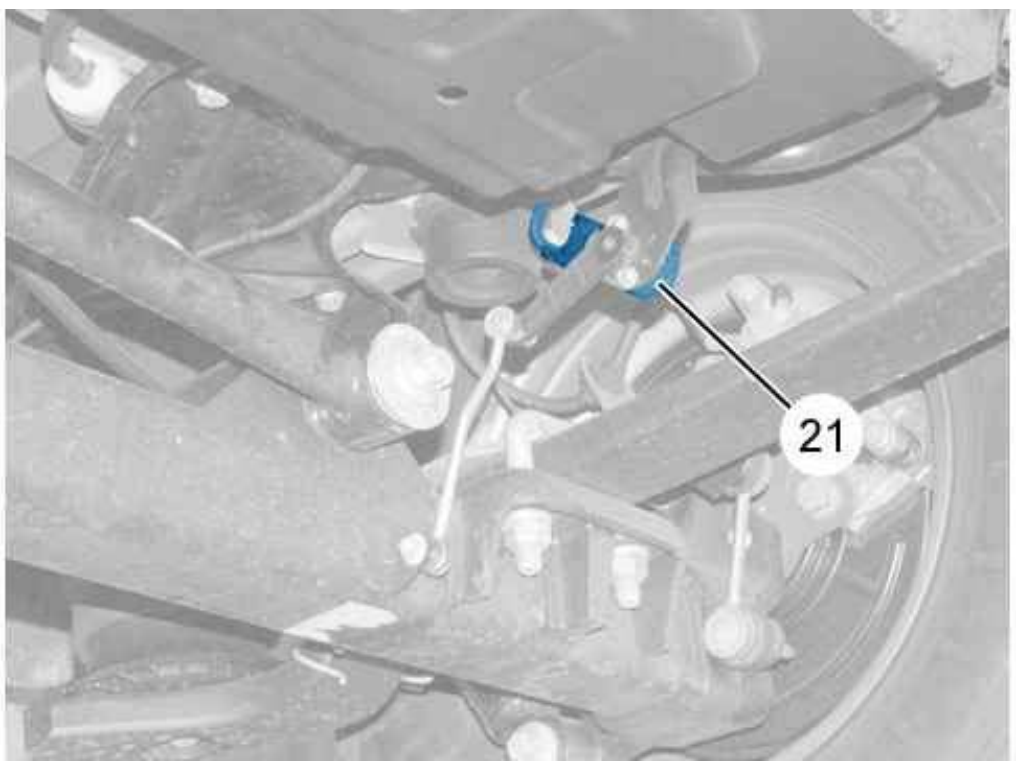

Figure : B3DM02TD

(21) Body height sensor (on each side).
The 2 body height sensors placed on the rear axle crossmember provide the ride height position information.

2.2. Air compressor

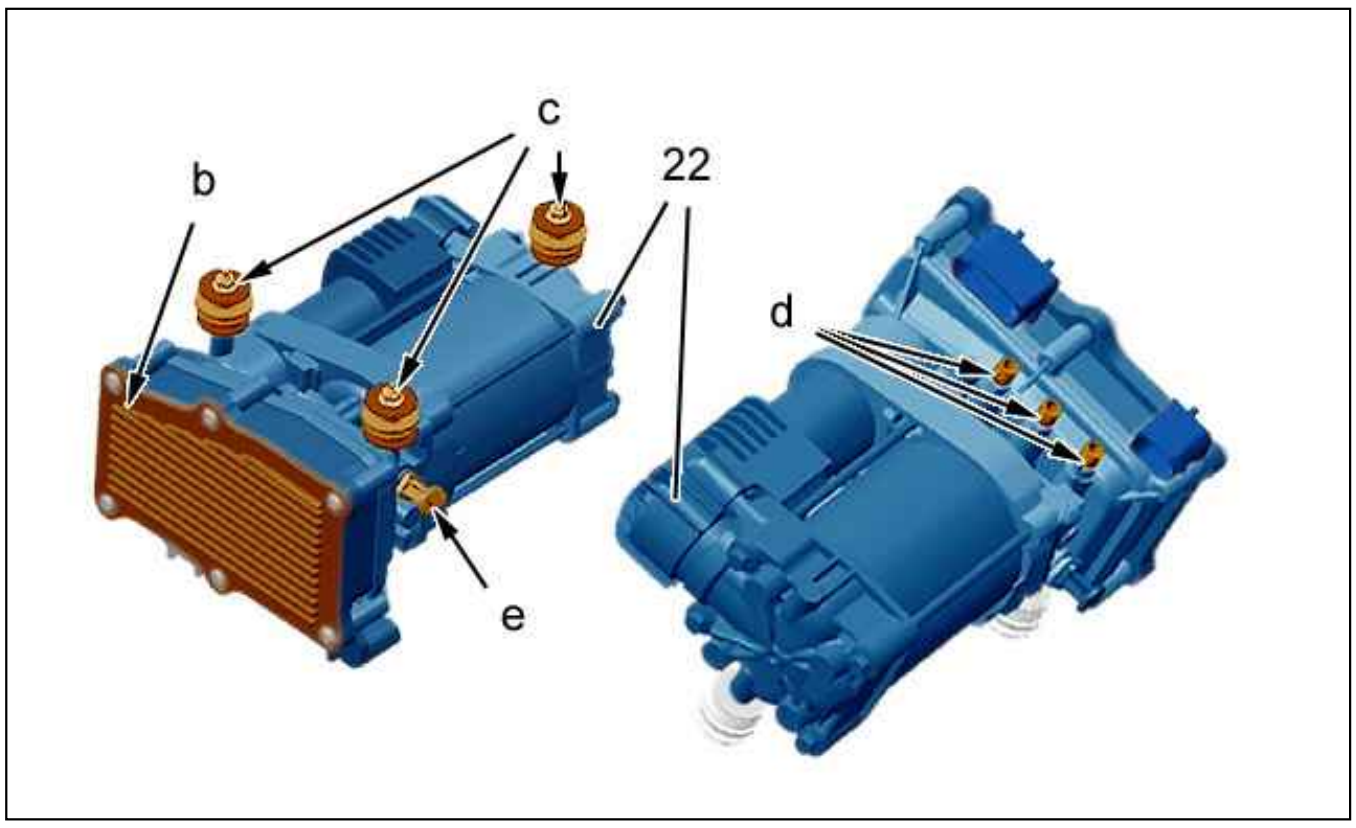

Figure : B3BM029D

(22) Compressed air compressor.
"b" Suspension ECU cover .
"c" Silentblock.
"d" Quick-fit pneumatic union (Pneumatic spring - Compressed air reservoir).
"e" Quick-fit pneumatic union (Intake/discharge filter pipe union).

2.3. Compressed air reservoir

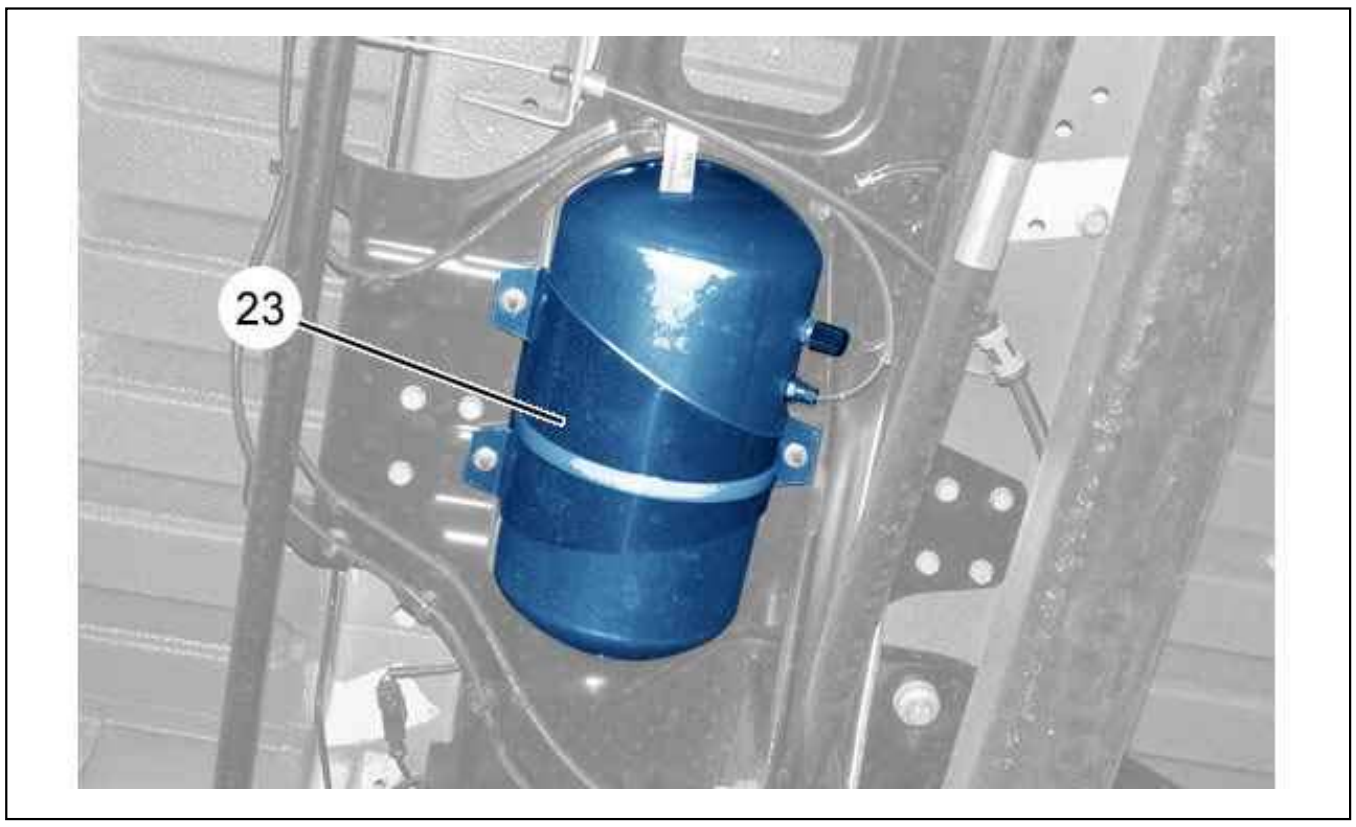

Figure : B3BM02AD

(23) Compressed air reservoir .
The compressed air reservoir (23) contains 5,4 litres of air at a pressure of approximately 17 bars.

2.4. Pneumatic spring

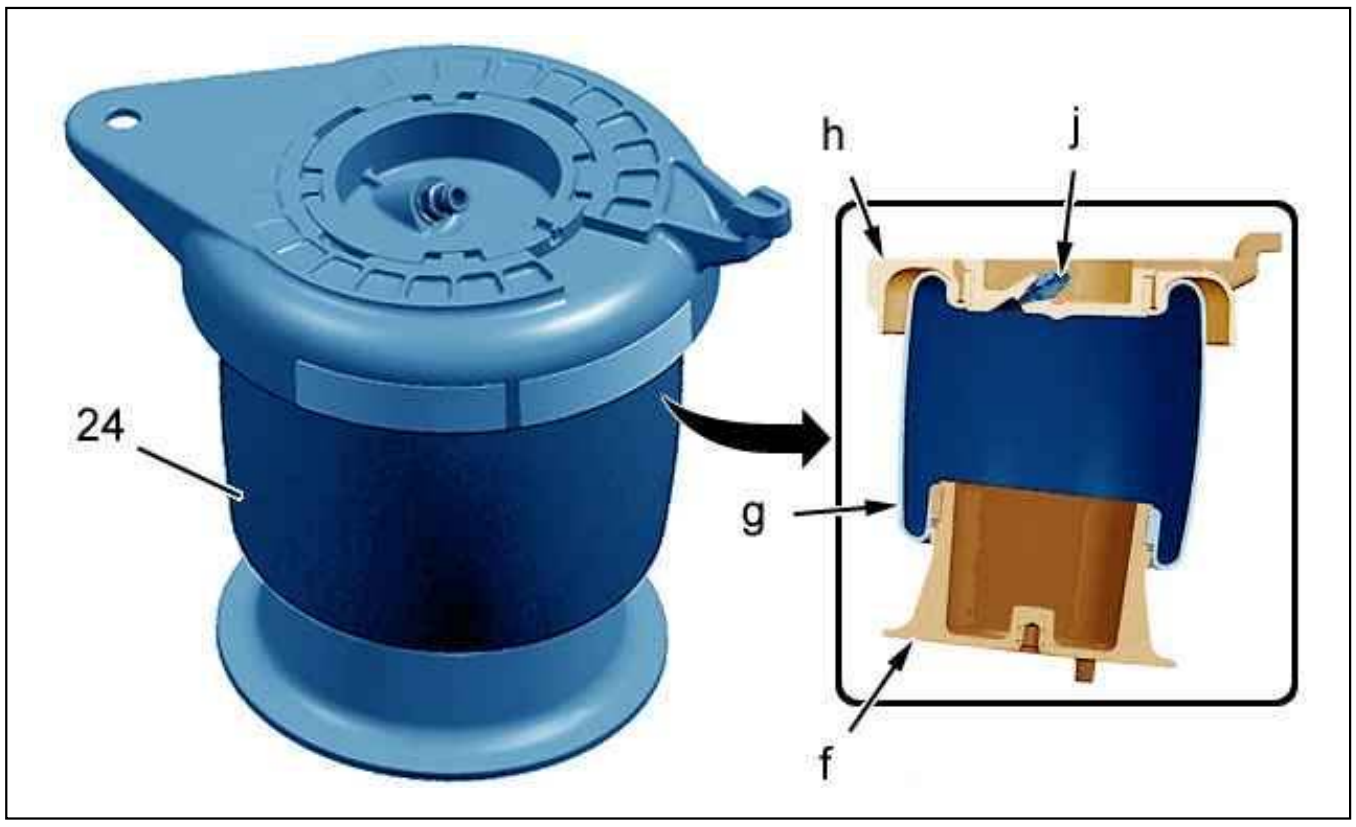

Figure : B3BM02BD

(24) Pneumatic suspension spring .
Composition of a pneumatic spring :

- "f" Pneumatic spring winder piston
- "g" Pneumatic spring diaphragm
- "h" Pneumatic spring upper support
- "j" Pneumatic union

Pressure in the pneumatic springs at the reference level : Approximately 7,3 bars.

2.5. Air union

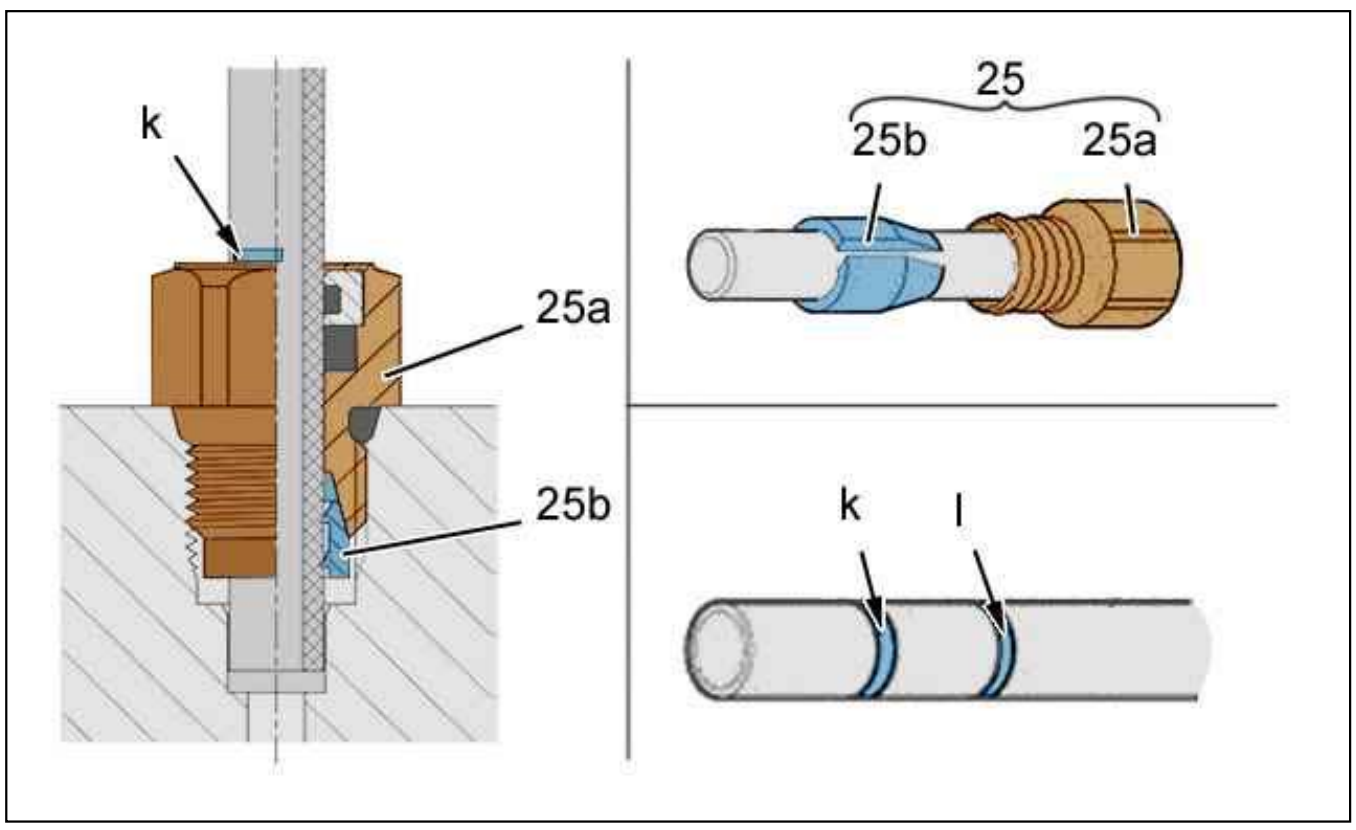

Figure : B3BM02CD

(25) Air union "Voss" :

- (25a) Union screw
- (25b) Oval-shaped handle

ESSENTIAL : The removal operation renders the union useless. Always replace the union each time the pneumatic suspension circuit pipes are uncoupled.

CAUTION : When fitting the pipe, only the mark "k" should remain visible (the mark "l" corresponds to the minimum pressing of the pipe).

3. Suspension geometry

N.B. : The geometry specifications are given with the values for checking and adjusting the axle geometries.

REMOVING - REFITTING : SUSPENSION BLADE REAR FLEXIBLE MOUNTINGS

ESSENTIAL : Observe the safety and cleanliness recommendations .

1. Tooling

tool	Reference	Designation
 Figure : E5AB0QCT	[0217-C7]	Centraliser
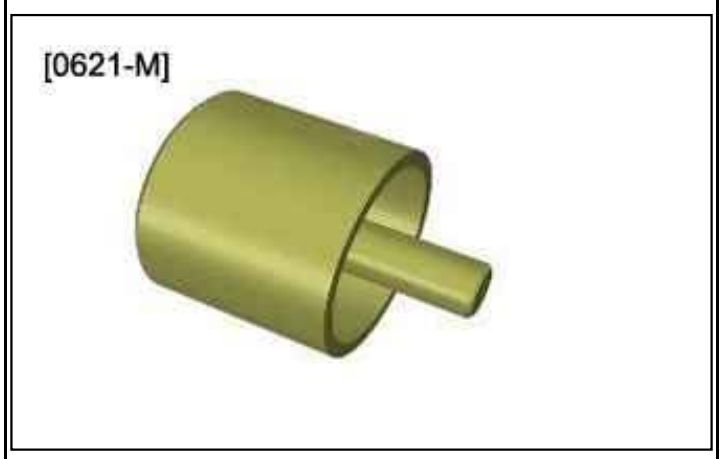 Figure : E5AB0QDT	[0621.M]	fitting mandrel
 Figure : E5AB0QFT	[0628-T J1 / 8601-T J1]	fitting mandrel

2. Removing

Remove : The rear suspension leaf .

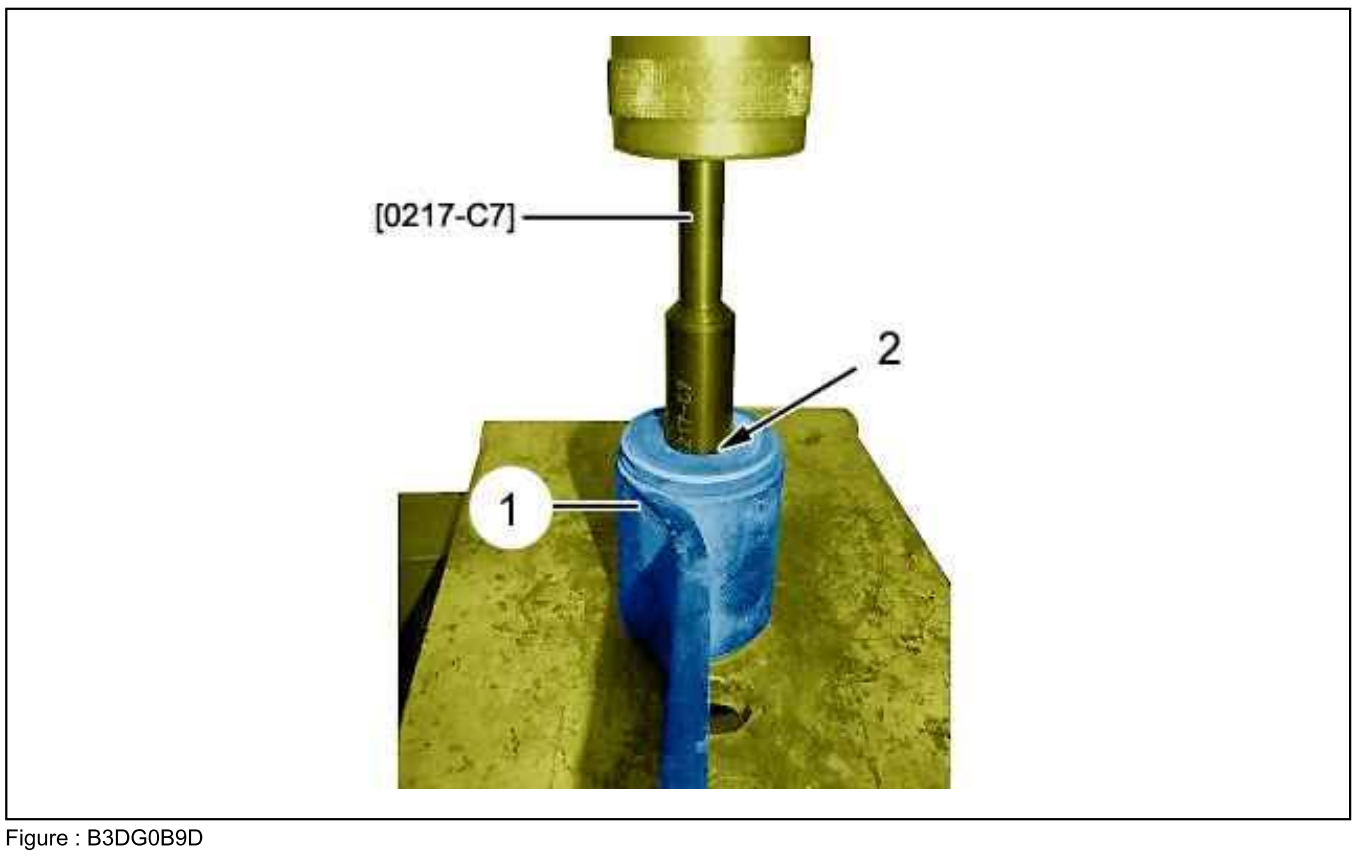

Figure : B3DG0B9D

Place the suspension leaf (1) on a press.
Remove the shaft (2) ; Using a press and tool [0217-C7].

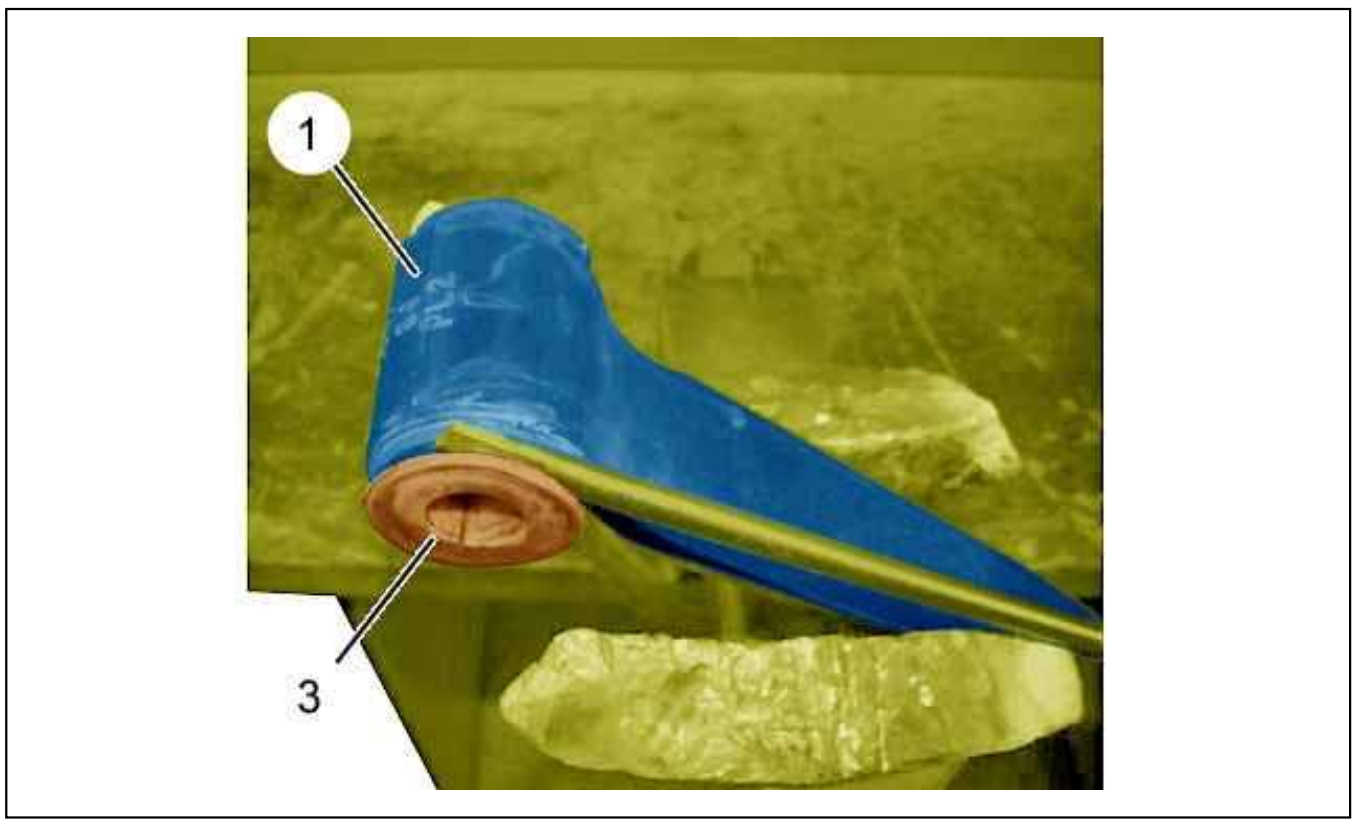

Figure : B3DG0BCD

Secure the suspension leaf (1) in a jaw vice.
Remove the bush (3) ; By means of a screwdriver (each side).

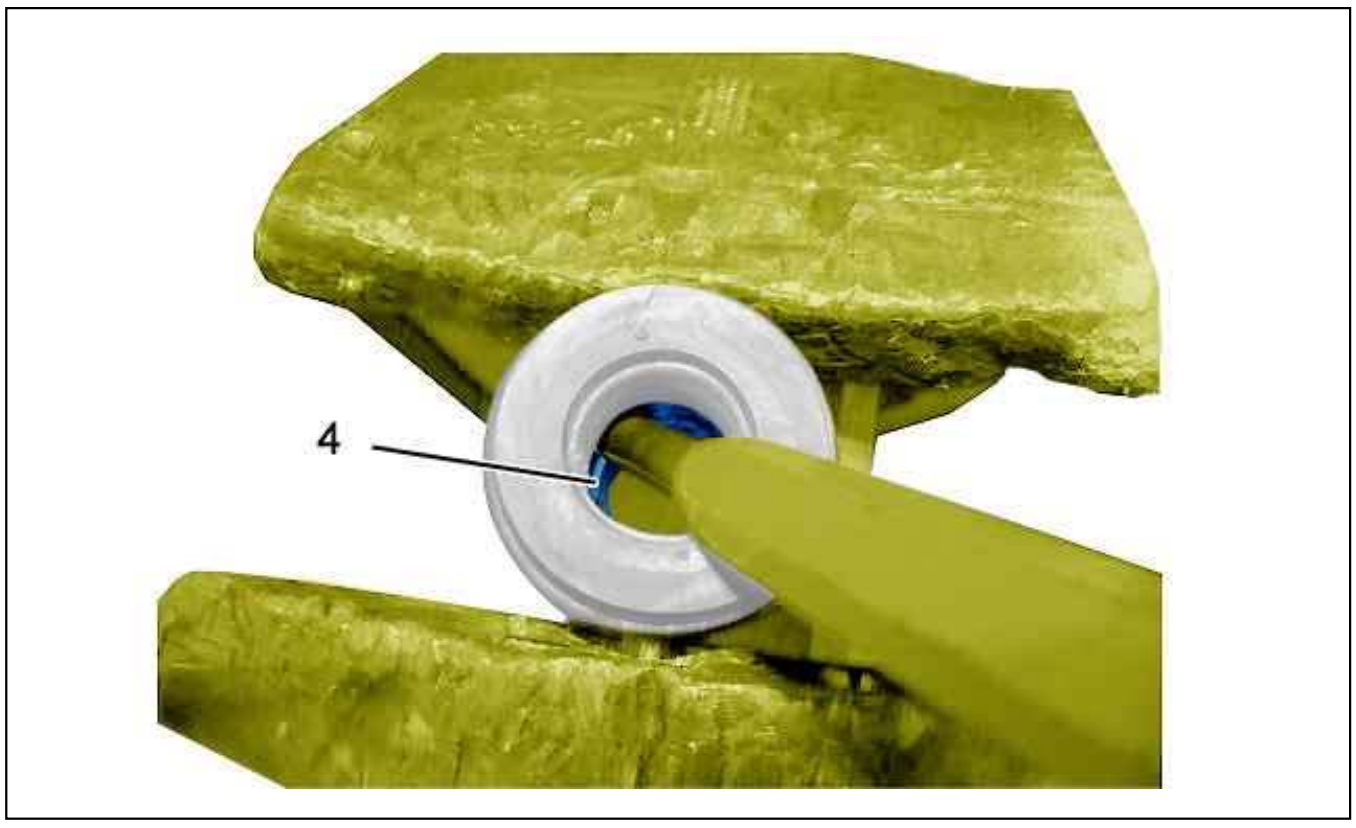

Figure : B3DG0BFD

Remove the rubber bush (4) ; Using a pin drift (each side).
Eliminate all traces of dirt and corrosion from the rubber bush housings.

3. Refitting

Grease : The housings of the flexible bushes (Use tyre grease).

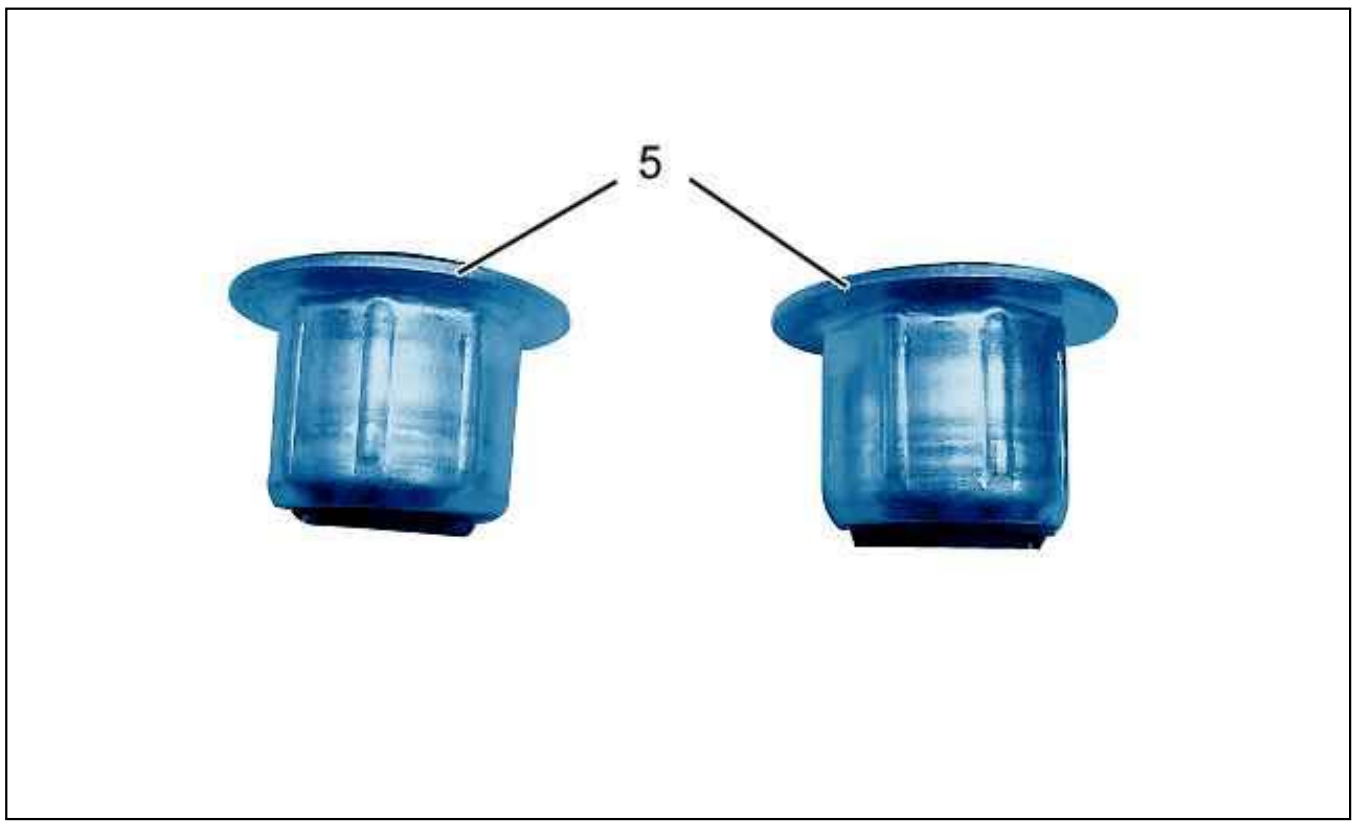

Figure : B3DG0BID

N.B. : The rubber bushes (5) replace the assembly of rubber bushes (4), ring (3) and shaft (2).

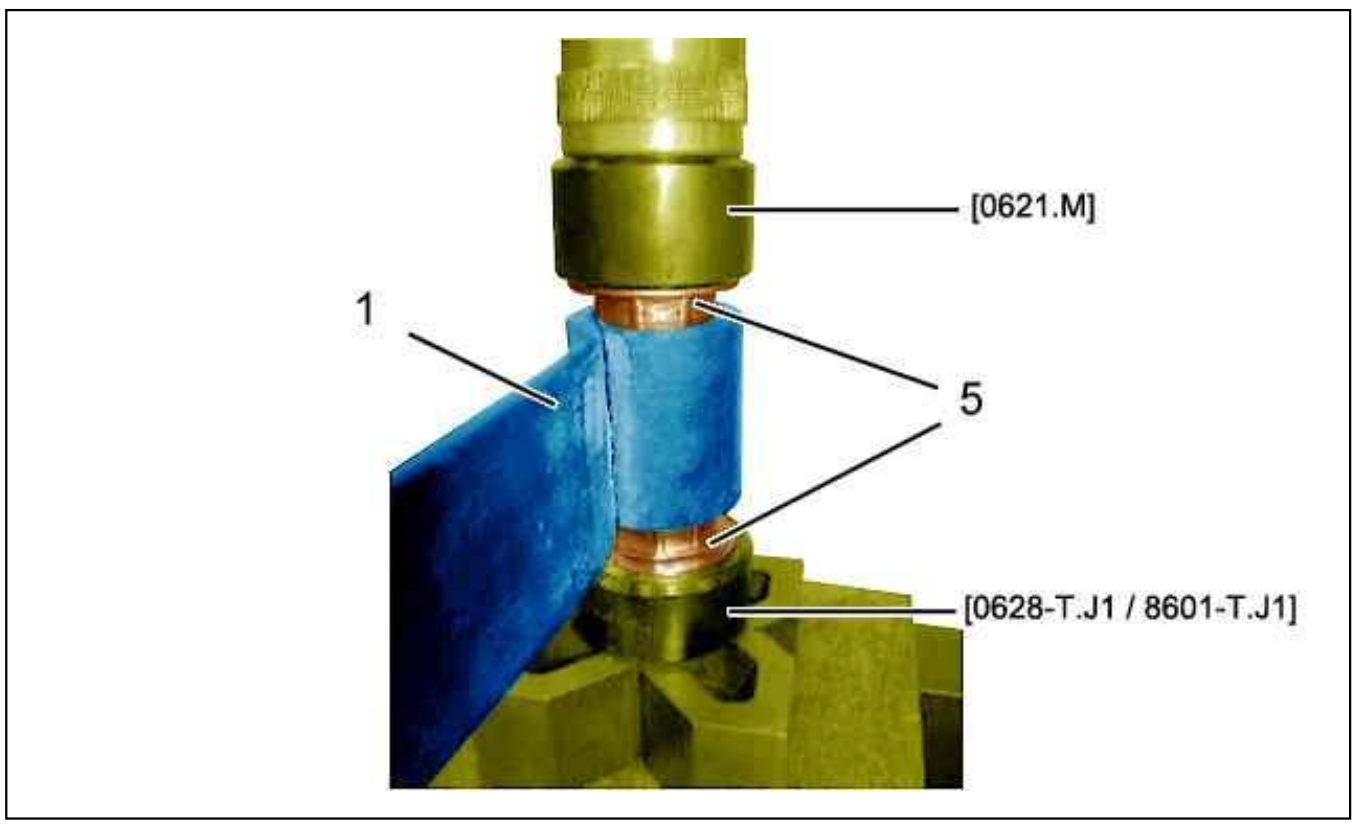

Figure : B3DG0BLD

Position :

- The tool [0628-T.J1 / 8601-T.J1]
- One of the rubber bushes (5) on the tool [0628-T.J1 / 8601-T.J1]
- The suspension leaf (1)
- The other rubber bush (5)
- The tool [0621.M]

Force-fit the rubber bushes (5) in as far as they will go.

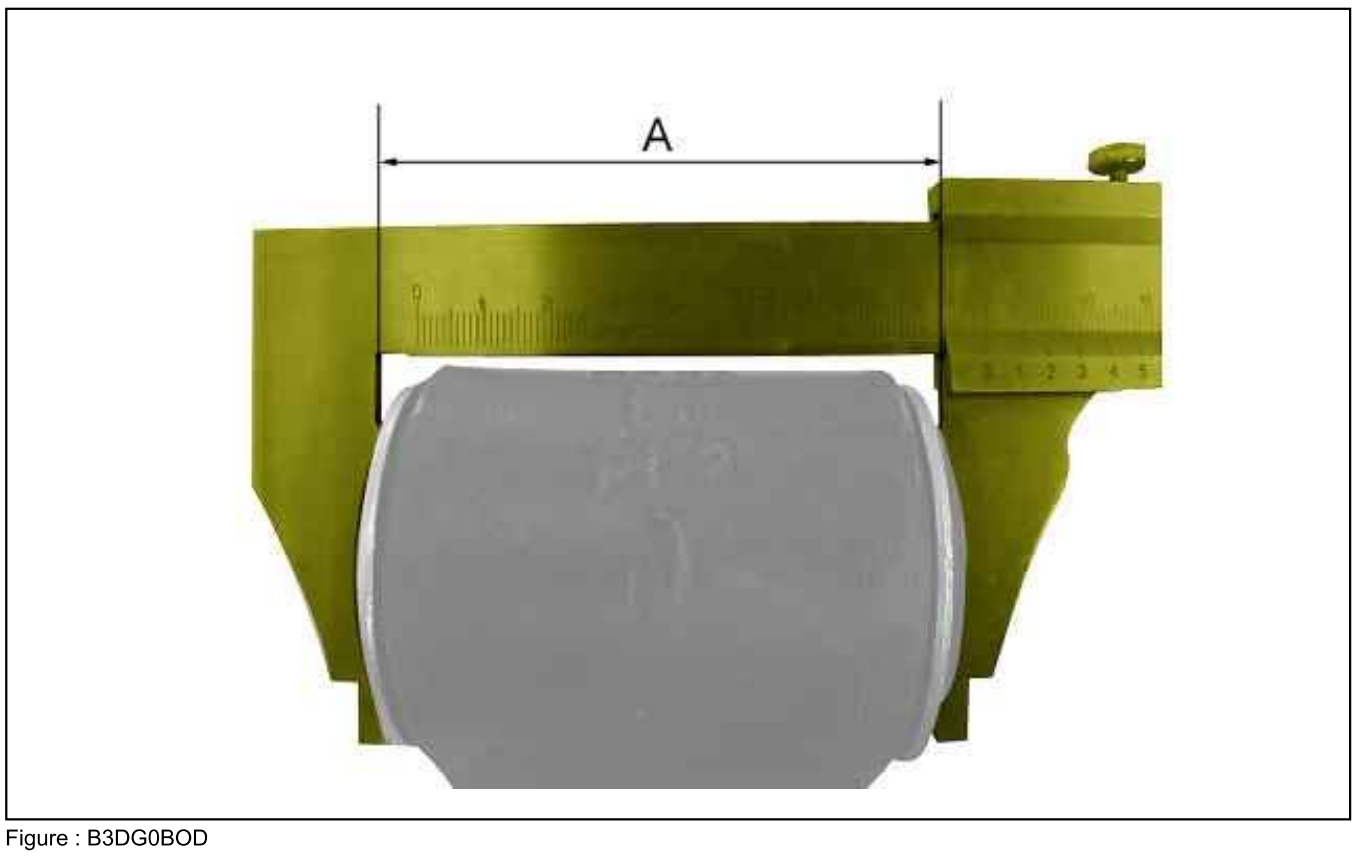

Figure : B3DG0BOD

Check the overall width "A" : 83 + 0 / -0,2 mm.

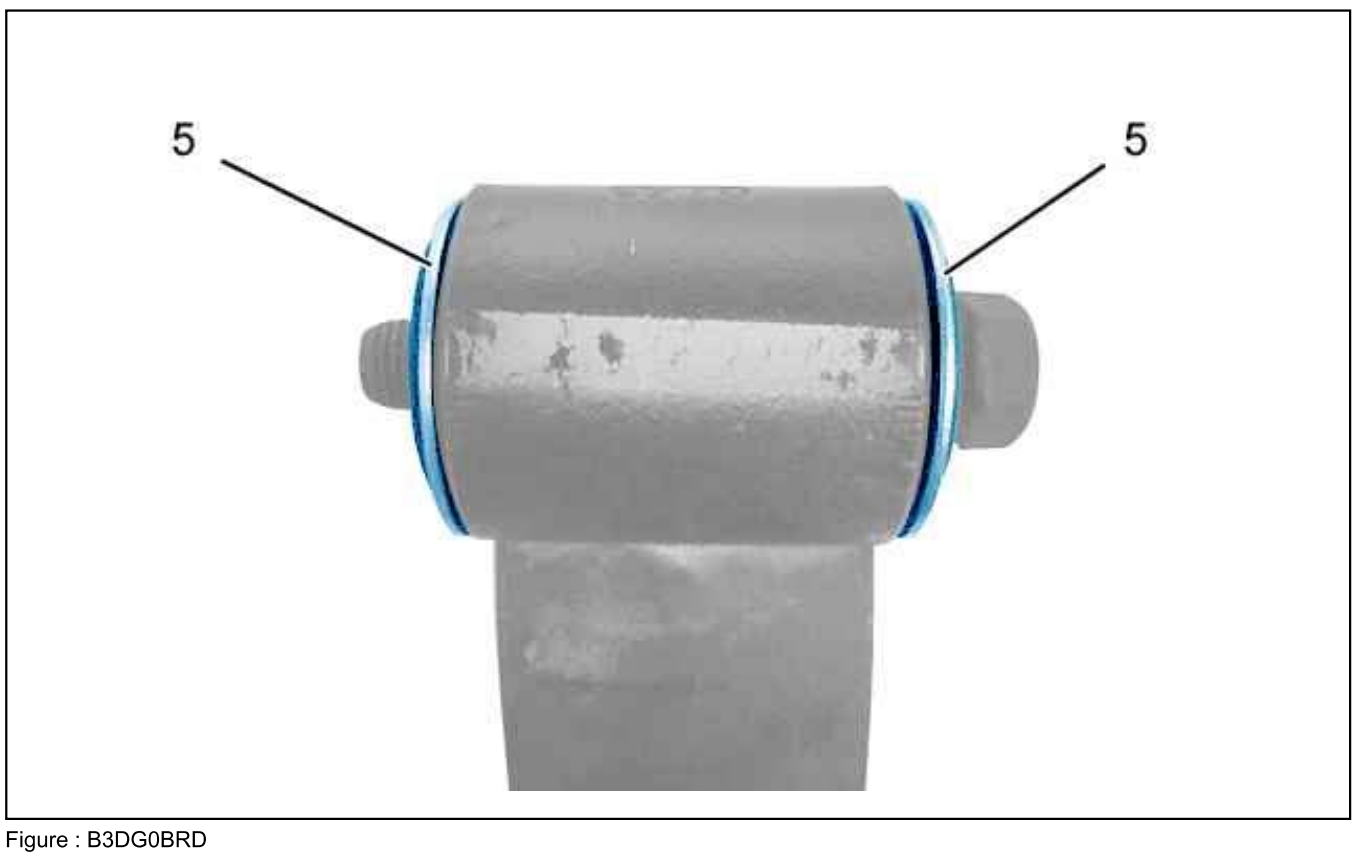

Figure : B3DG0BRD

Check the alignment of the rubber bushes (5) ; Using a pin 16 mm in diameter.
Refit : The rear suspension leaf .

REMOVING - REFITTING : REAR SUSPENSION

1. Recommended tools

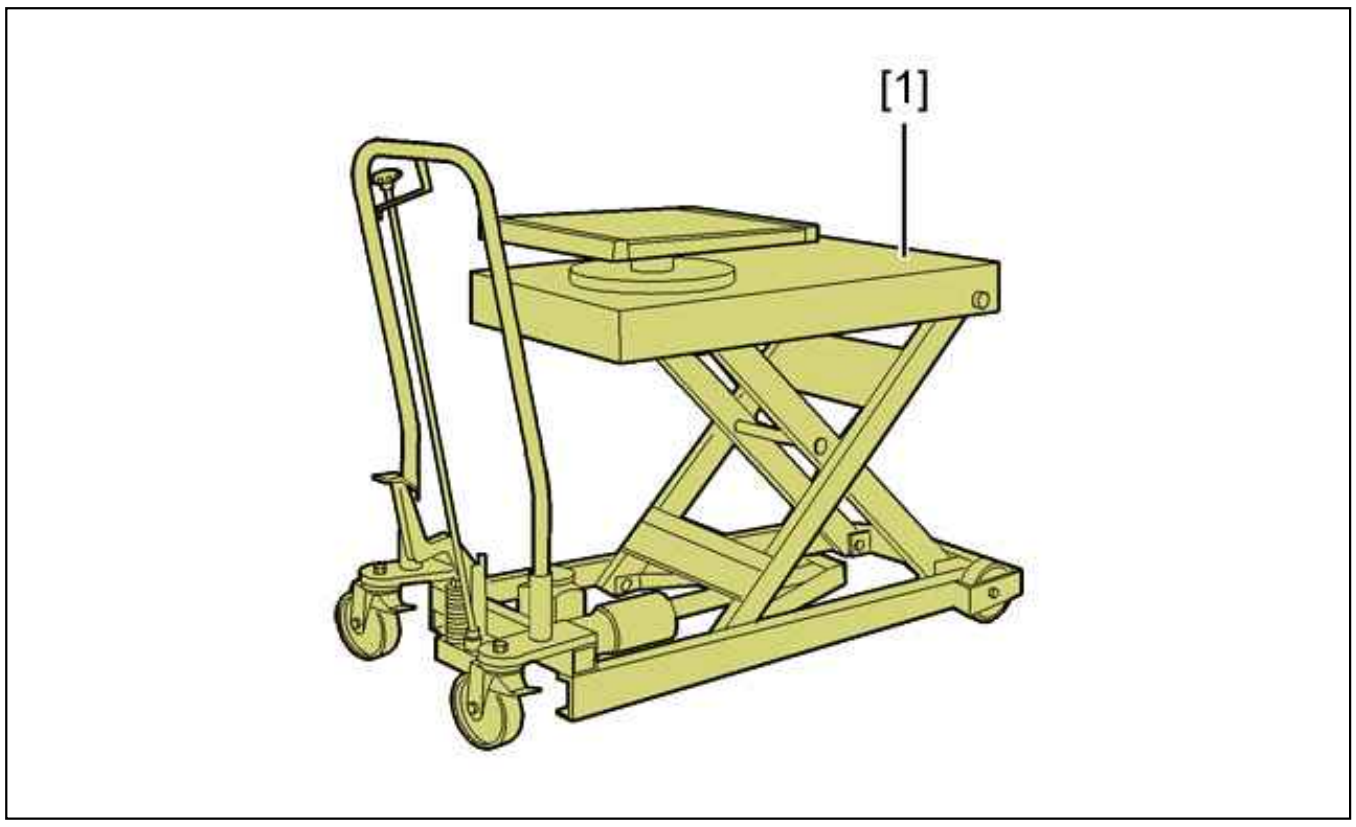

Figure : E5AP2XSD

Reference	Designation	Reference	Reference
[1]	lifting bench	5702-T.A	(-).0004

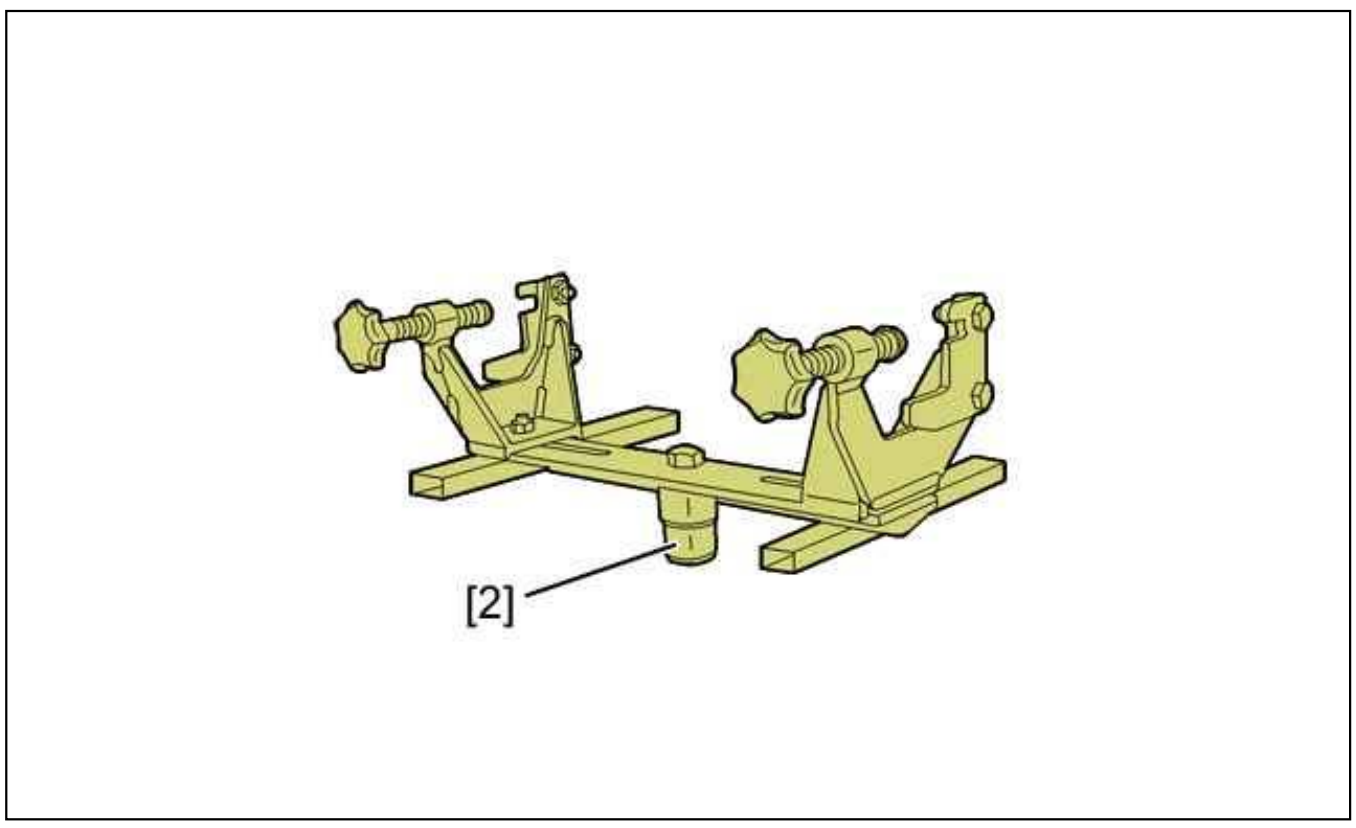

Figure : E5AP2XTD

Reference	Designation	Reference	Reference
[2]	Bracket for removal/refitting of mechanical components	5713-T	(-).0008

2. Removing

To facilitate access ; Remove the spare wheel.
Disconnect the battery negative terminal.
Untighten the rear wheel bolts.

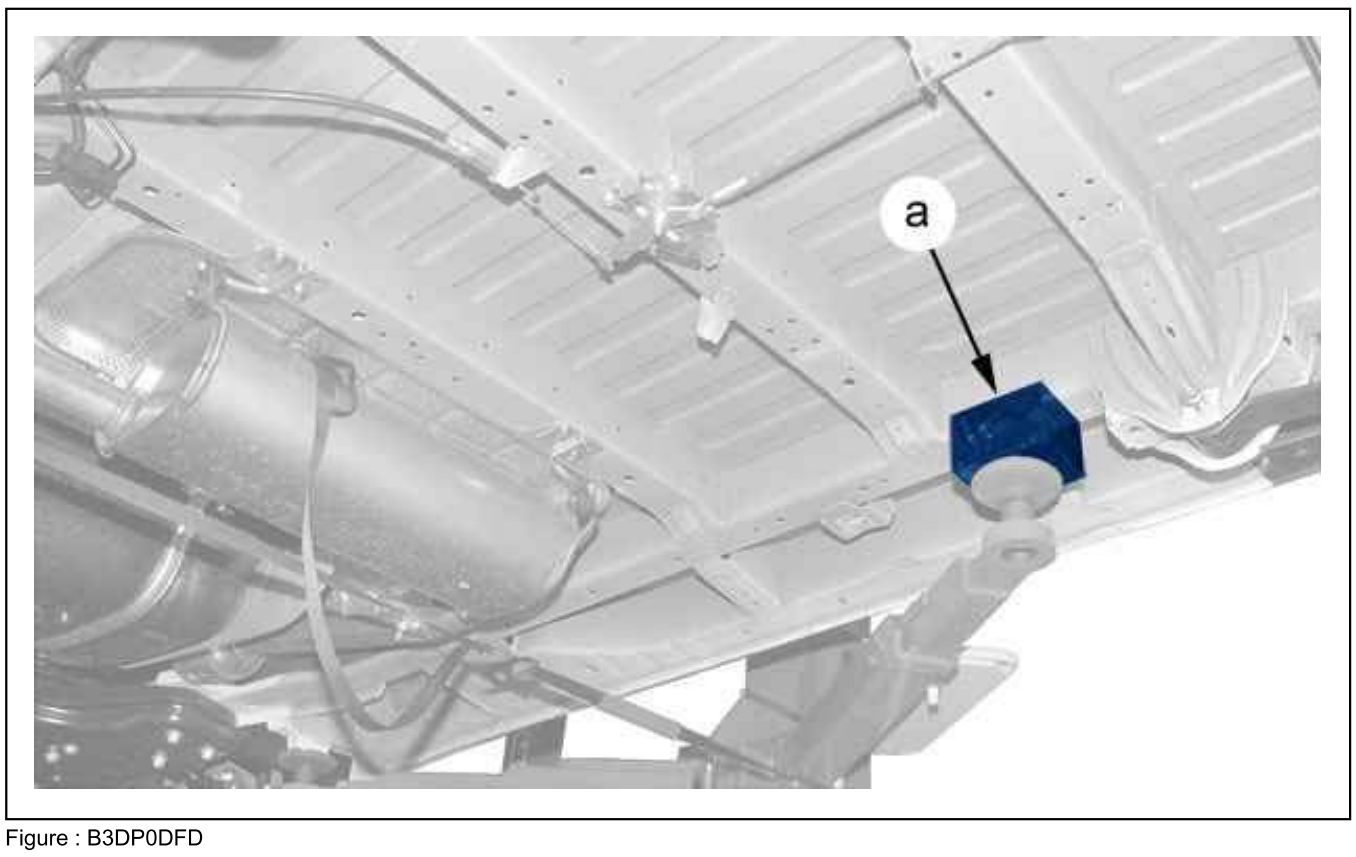

Figure : B3DP0DFD

ESSENTIAL : When raising and jacking up the vehicle, place the rubber pads of the lift under the body reinforcements at "a".

Raise and support the vehicle, with the rear wheels hanging free.
Remove the rear wheels.

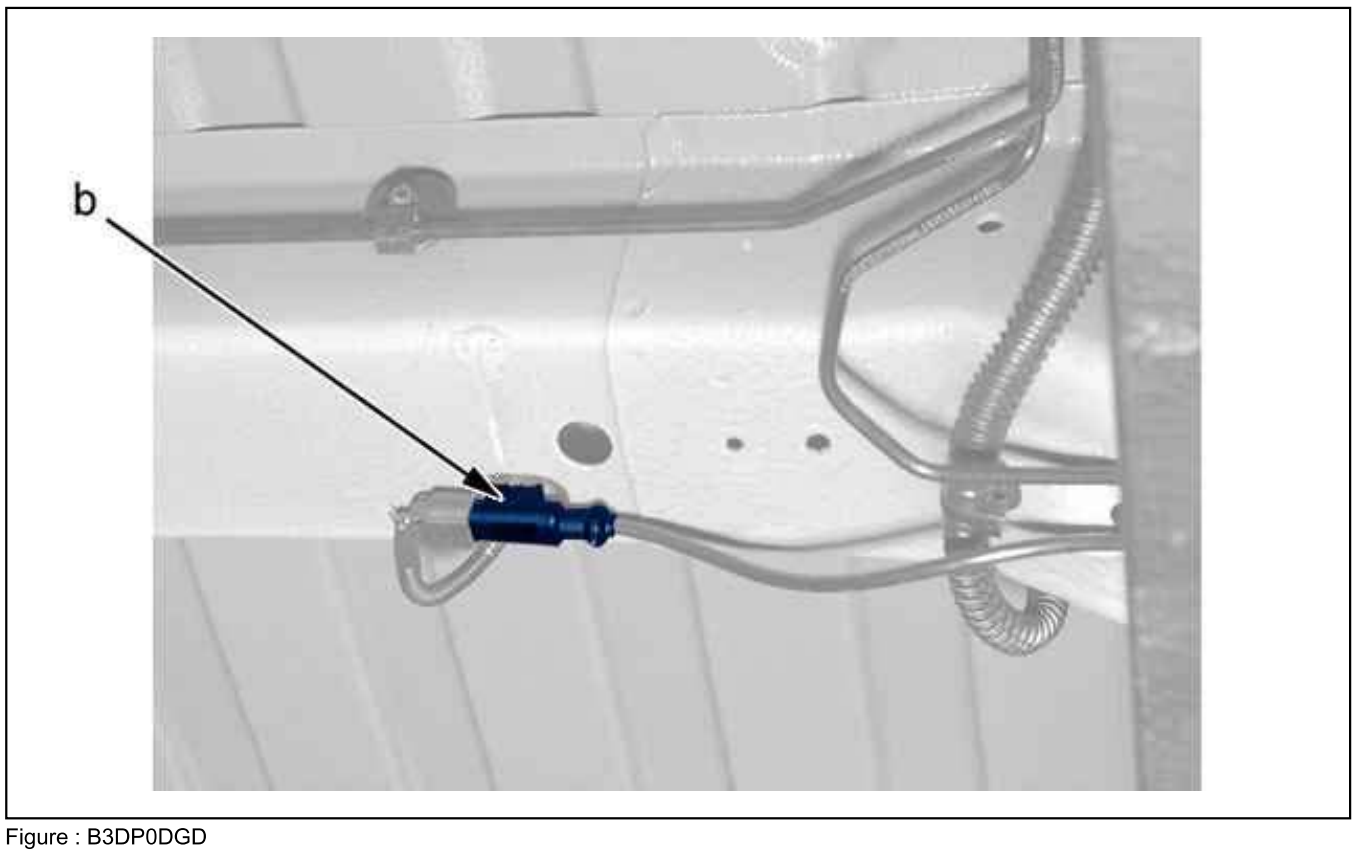

Figure : B3DP0DGD

each side :

- Disconnect the wheel sensor connector (at "b")
- Unclip electrical harness ABS from the bodyshell

Remove the brake pads (see the relevant operation).

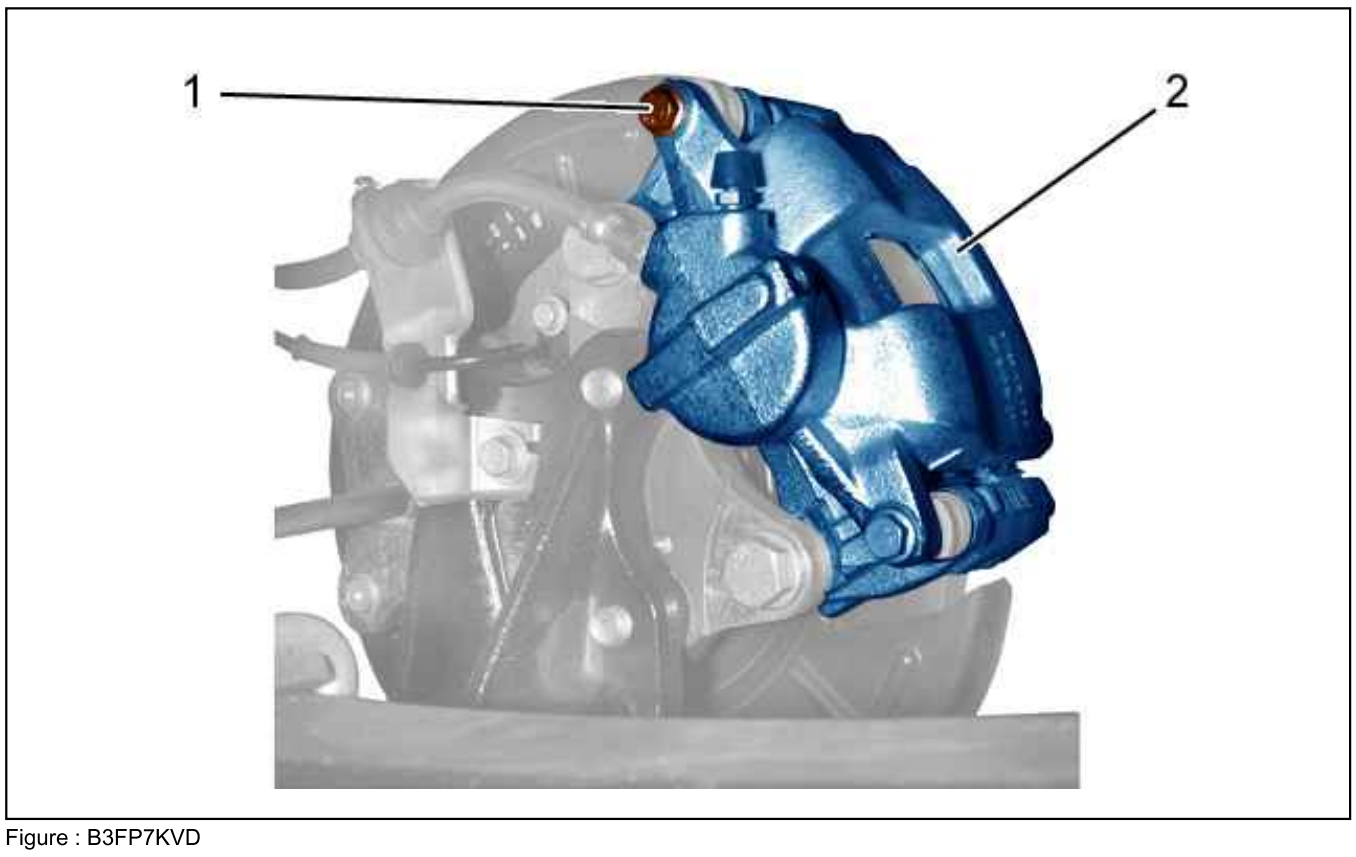

Figure : B3FP7KVD

Remove (on each side) :

- The (1) bolt
- The brake caliper (2)

Hang the brake caliper on the body.

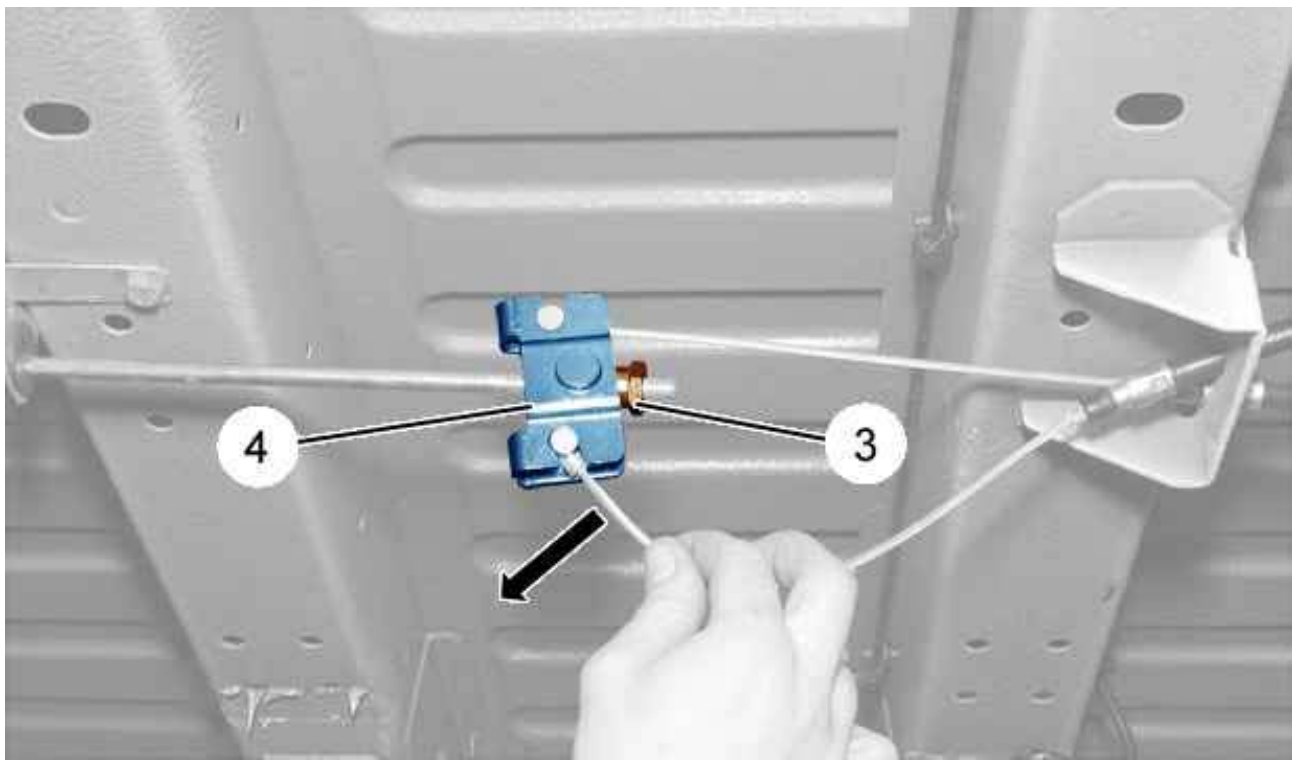

Figure : B3FP7KWD

Unscrew nut (3).
Uncouple the handbrake cables at the compensator (4) (following the arrow).

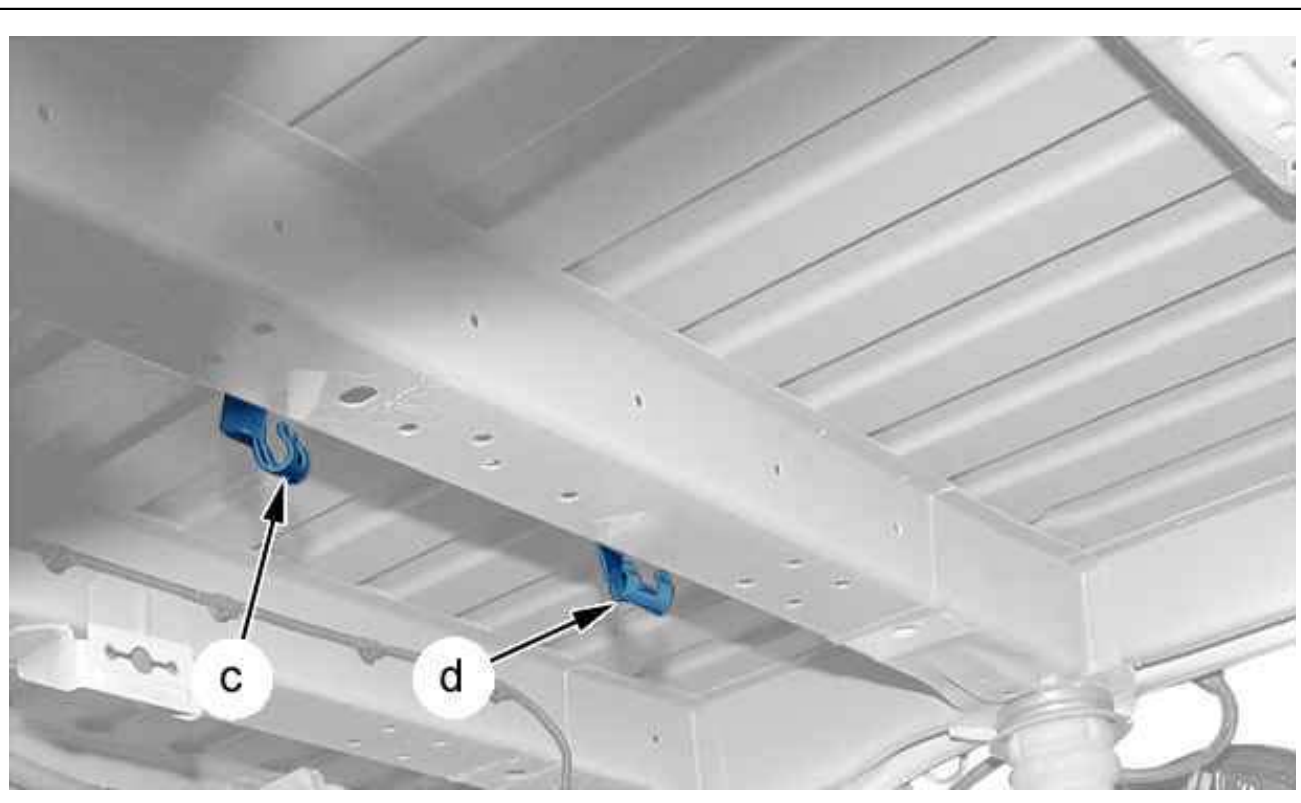

Figure : B3DP0DHD

Remove the handbrake sleeves from their housing (at "c, "d").



Figure : B3BP1CND

Slacken the upper fixing (5) of the dampers (on each side).

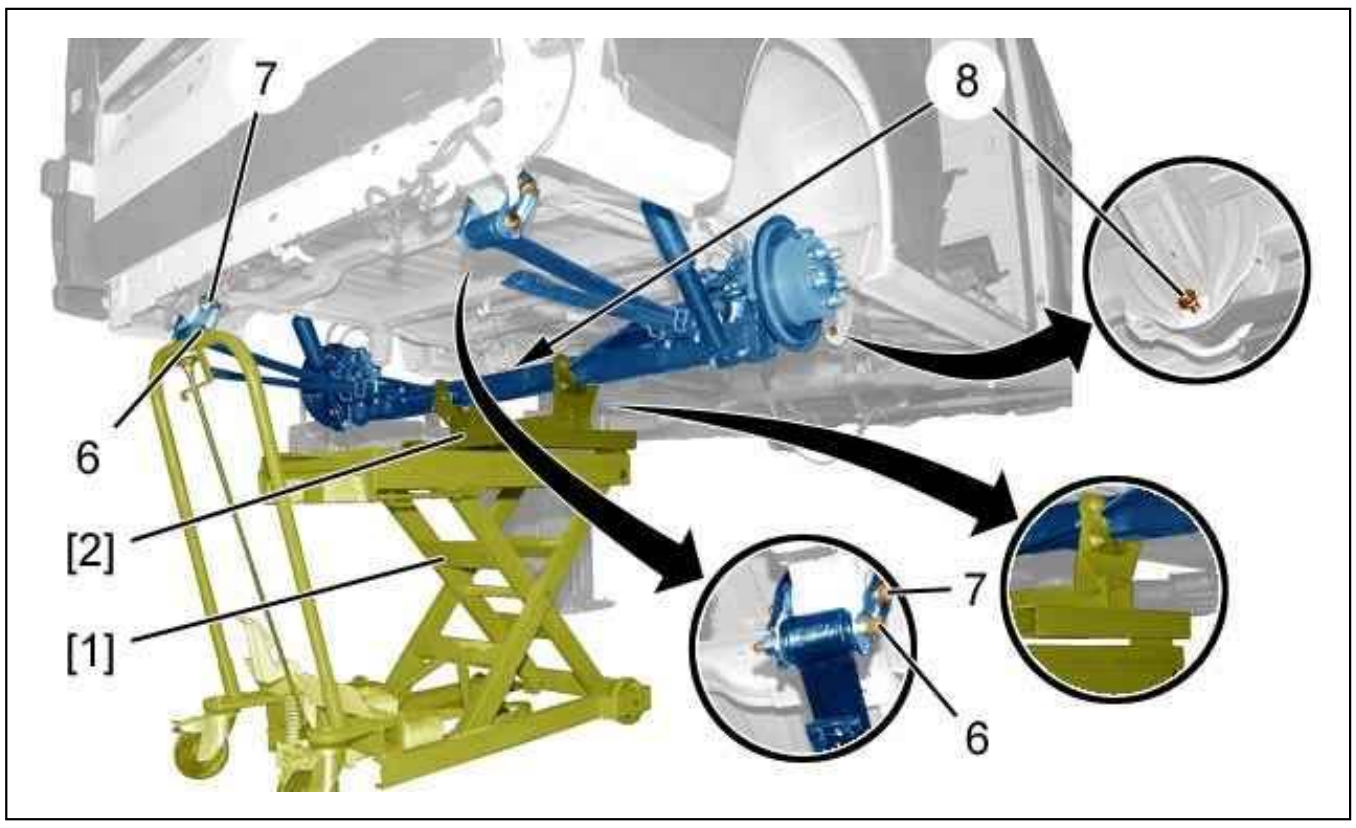

Figure : C4BP1QXD

Position the tool [2] under the rear suspension ; Using tool [1].
Keep the rear axle in position using the lifting tool [2].
Slacken off suspension blade screws (6).
Remove :

- The rear suspension fixing bolts (7), (8)
- The upper fixing (5) of the dampers (on each side)

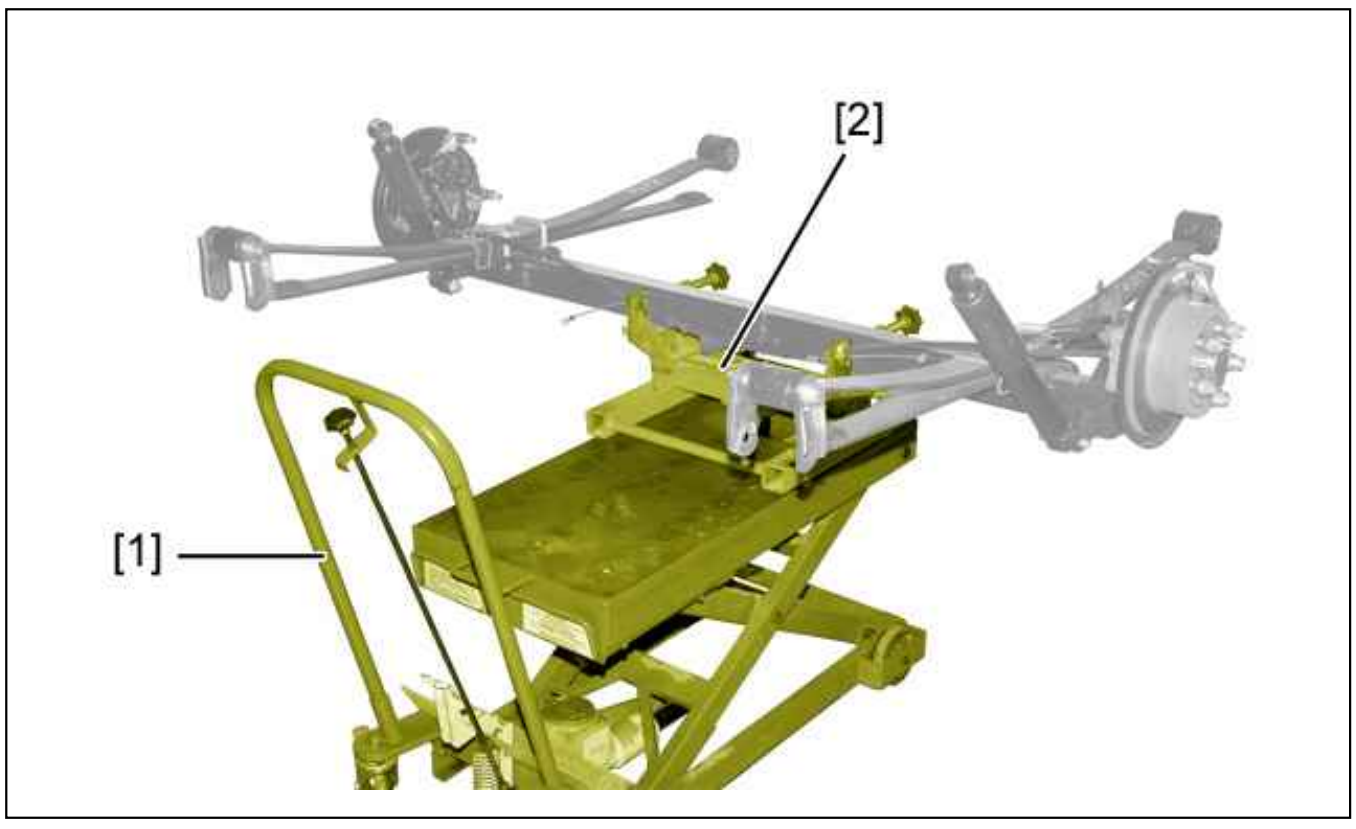

Figure : B3DP0DJD

Remove the rear suspension.
Handle the rear suspension ; Using tool [1].
Equip tool [2] plate with its detachable legs, so as to liberate tool [1].

3. Refitting

CAUTION : Always fit new Nylstop nuts.

Place the rear axle under the vehicle ; Using tool [1].
Refit :

- The rear axle
- The bolts (7), (8)

Refit dampers upper fixing (5).

ESSENTIAL : Before carrying out the final tightening of fixings (5), (6), (7), (8), the vehicle MUST be placed at the load setting height.

Remove the tools [1], [2].
Refit (on each side) :

- The brake caliper (2)
- The bolt (1) (new) Pre-coated with a thread-locking product

Tighten the bolt (1) to 3 ± 0,3 daN.m.
Fit the brake pads (see the relevant operation).
Couple the handbrake cables at the compensator (4).
Fit the handbrake sleeves in their housing (at "c, "d").

Adjust The handbrake cables (see the relevant operations).
Reconnect the wheel sensor connector " b " (on each side).
Clip the wheel sensor harness on the body (on each side).
Return the spare wheel to its place.
Refit the rear wheels.
Return the vehicle to its wheels.
Before carrying out the final tightening of fixings , the vehicle MUST be placed at the load setting height (see the relevant operation).
Tighten :

- The bolts (5), (6), (7) to 14,5 ± 1,2 daN.m
- The bolts (8) to 18,5 ± 2,9 daN.m

Tighten the wheel bolts .
Reconnect the battery negative terminal.

REMOVING - REFITTING : REAR STUB AXLE

1. Removing

Untighten the wheel screws (rear).
Raise and support the vehicle, with the rear wheels hanging free.
Remove the rear wheels.

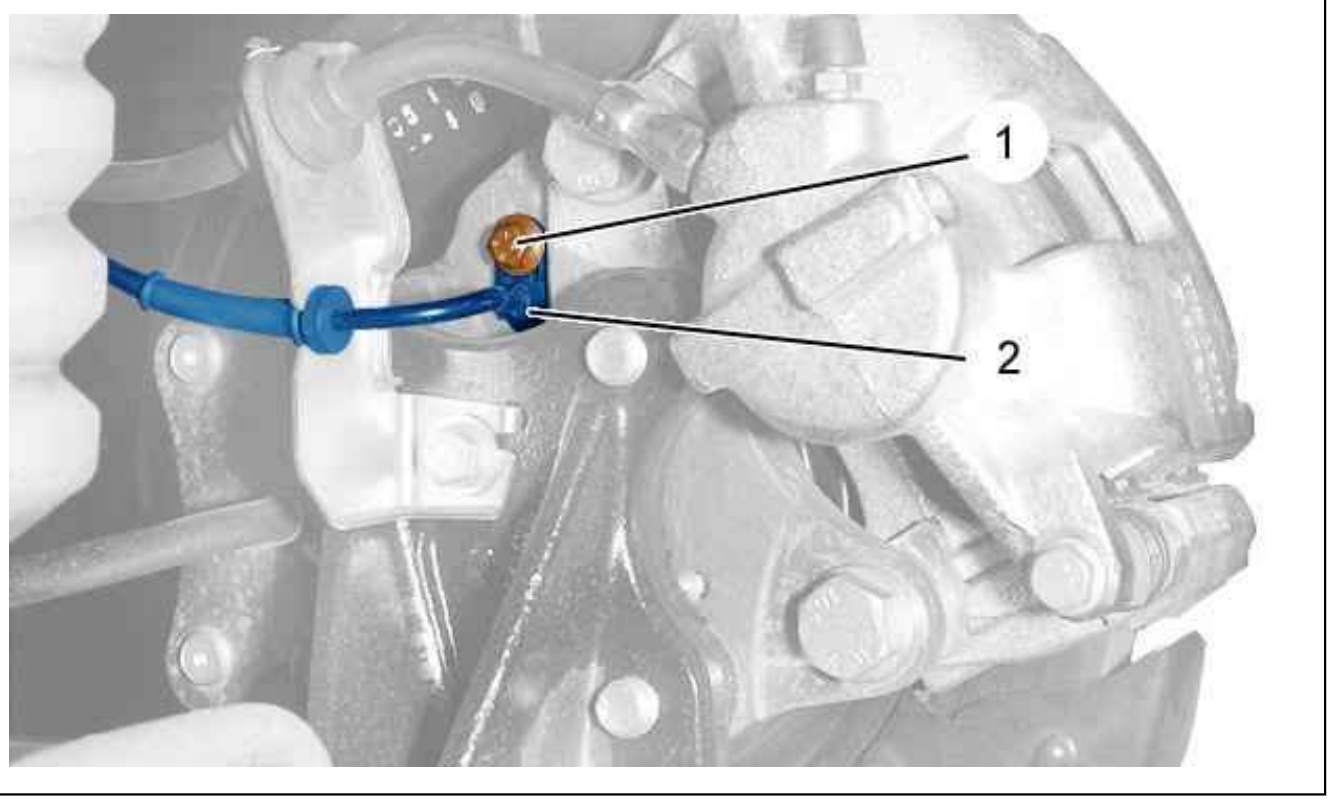

Figure : B3FP7LAD

Remove bolts (1).
Move aside the wheel speed sensor (2).
Remove :

- The rear hub (see the relevant operation)
- The parking brake shoes (see the relevant operation)

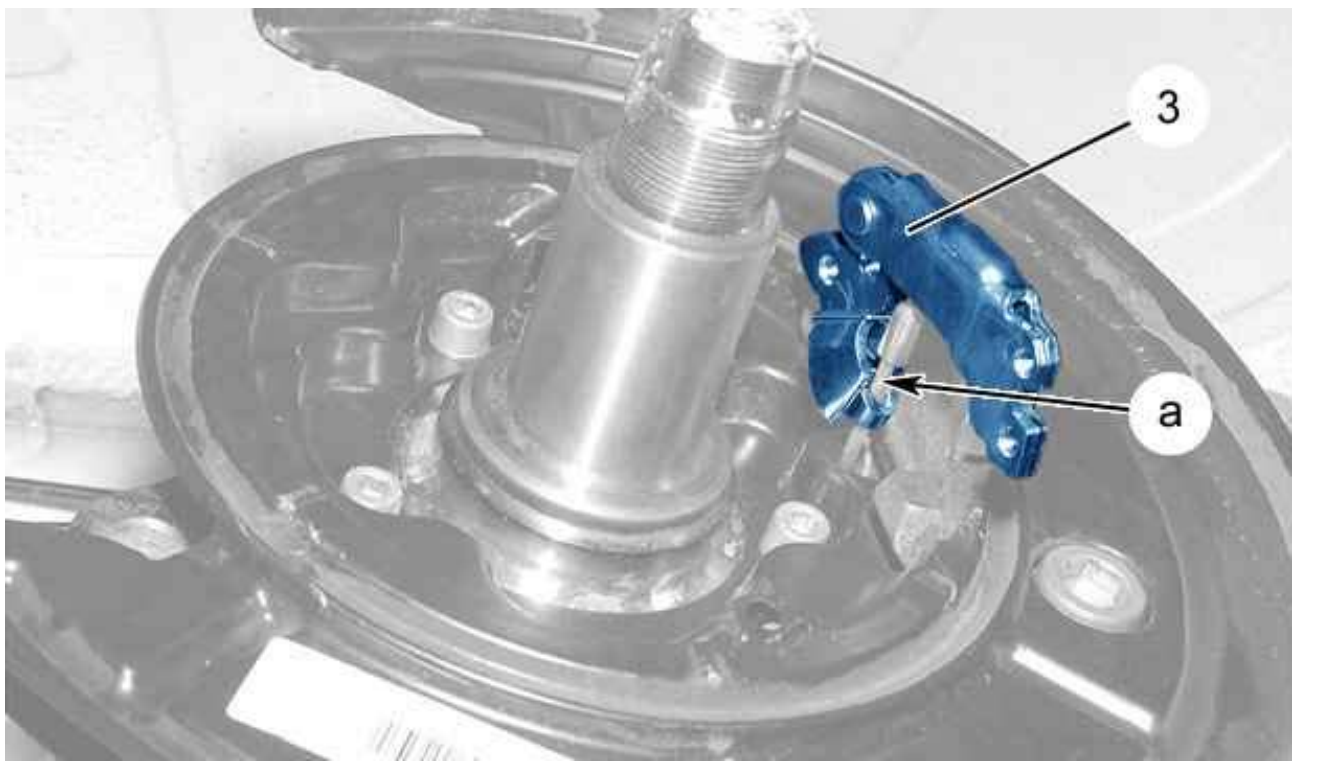

Figure : B3FP7LBD

Uncouple the parking brake control lever cable (3) (at "a").
Remove the parking brake control lever (3).

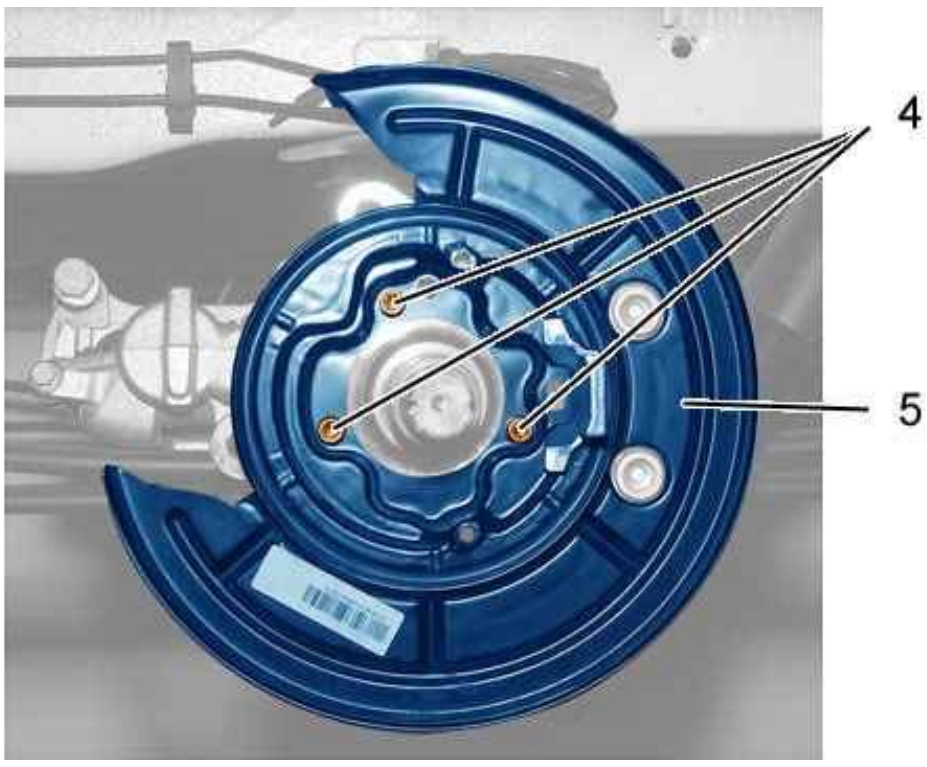

Figure : B3FP7LCD

Remove :

- The bolts (4)
- The backplate (5)

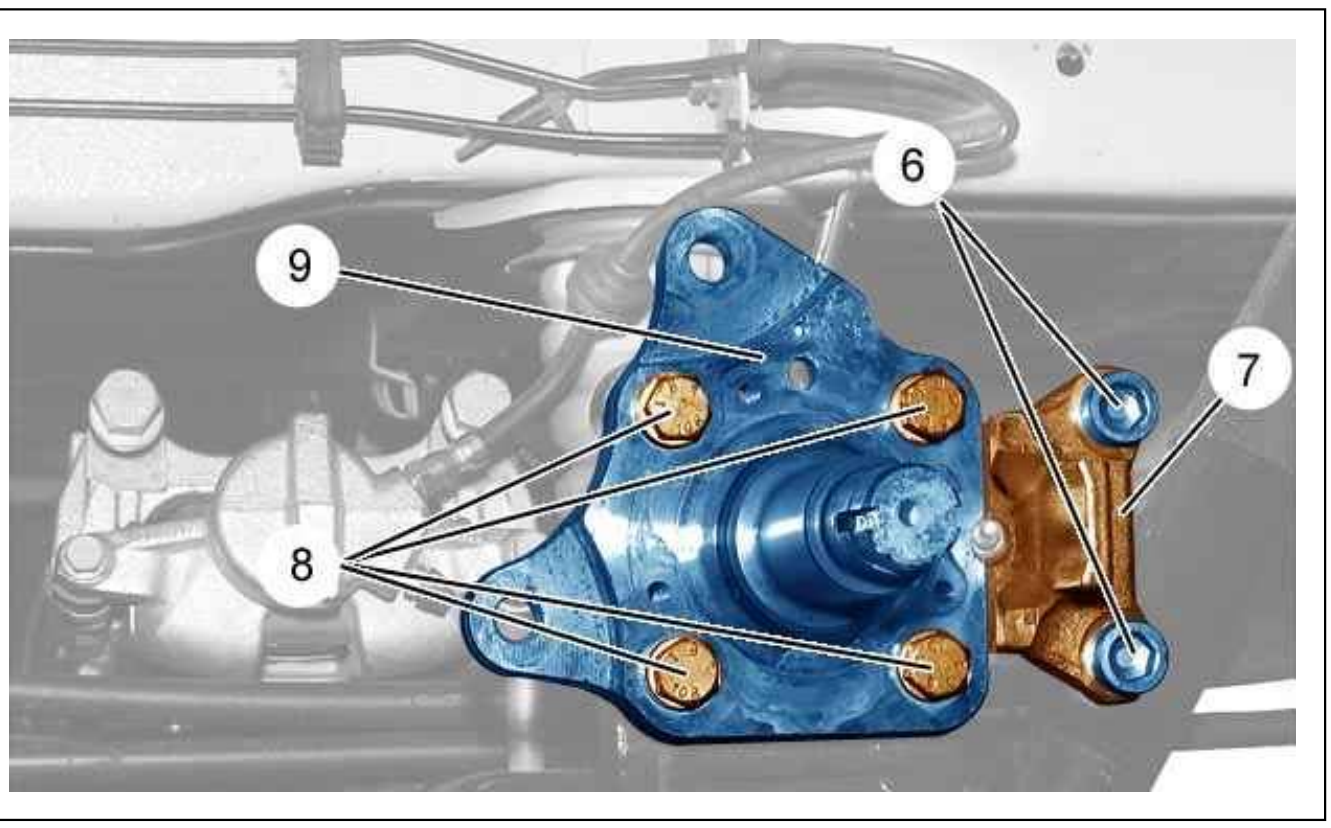

Figure : B3DP0DMD

Remove :

- The bolts (6)
- The bracket (7)
- The bolts (8)
- The stub axle (9)

2. Refitting

Refit :

- The stub axle (9)
- The bolts (8) ; Tighten to 20 ± 2 daN.m

Refit :

- The bracket (7)
- The bolts (6) (new) (pre-coated with a thread locking product)

Tighten the bolts (6) to 20 ± 2 daN.m.
Refit :

- The backplate (5)
- The bolts (4) ; Tighten to 2,5 ± 0,2 daN.m

Refit the parking brake control lever (3).
Couple the parking brake control lever cable (3) (at "a").
Refit :

- The parking brake shoes (see the relevant operation)
- The rear wheel sensor (2)
- The (1) bolt ; Tighten to 0,8 ± 0,3 daN.m
- The rear hub (see the relevant operation)

REMOVING - REFITTING : REAR HUB

1. Recommended tools

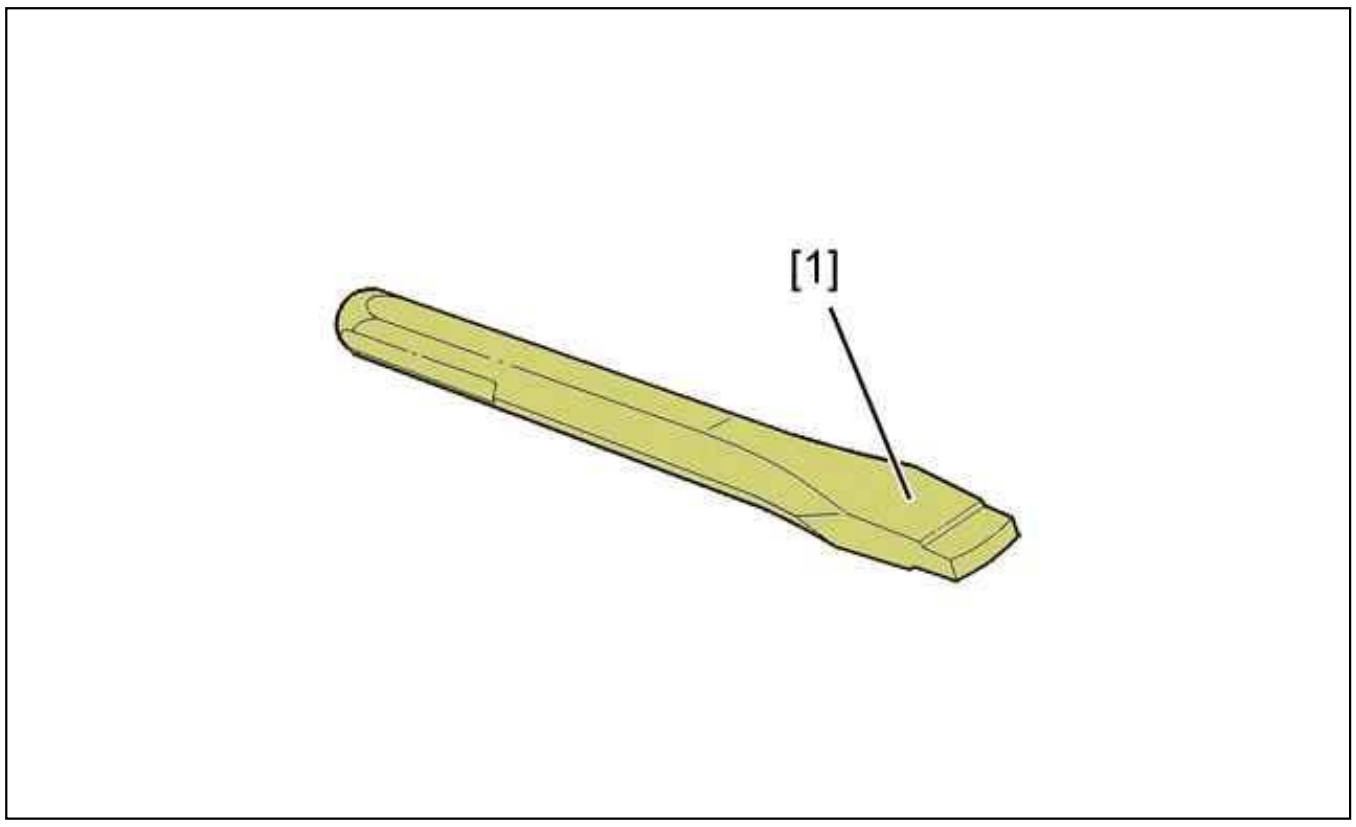

Figure : E5AP2Y9D

Reference	Designation	Reference	Reference
[1]	locking punch	5709-T.E (kit 5709-T)	(-).0619E (kit (-).0619)

2. Removing

Untighten the wheel screws (rear).
Raise and support the vehicle, with the rear wheels hanging free.
Remove :

- The rear wheels
- The hub cap
- The brake disc (see the relevant operation)

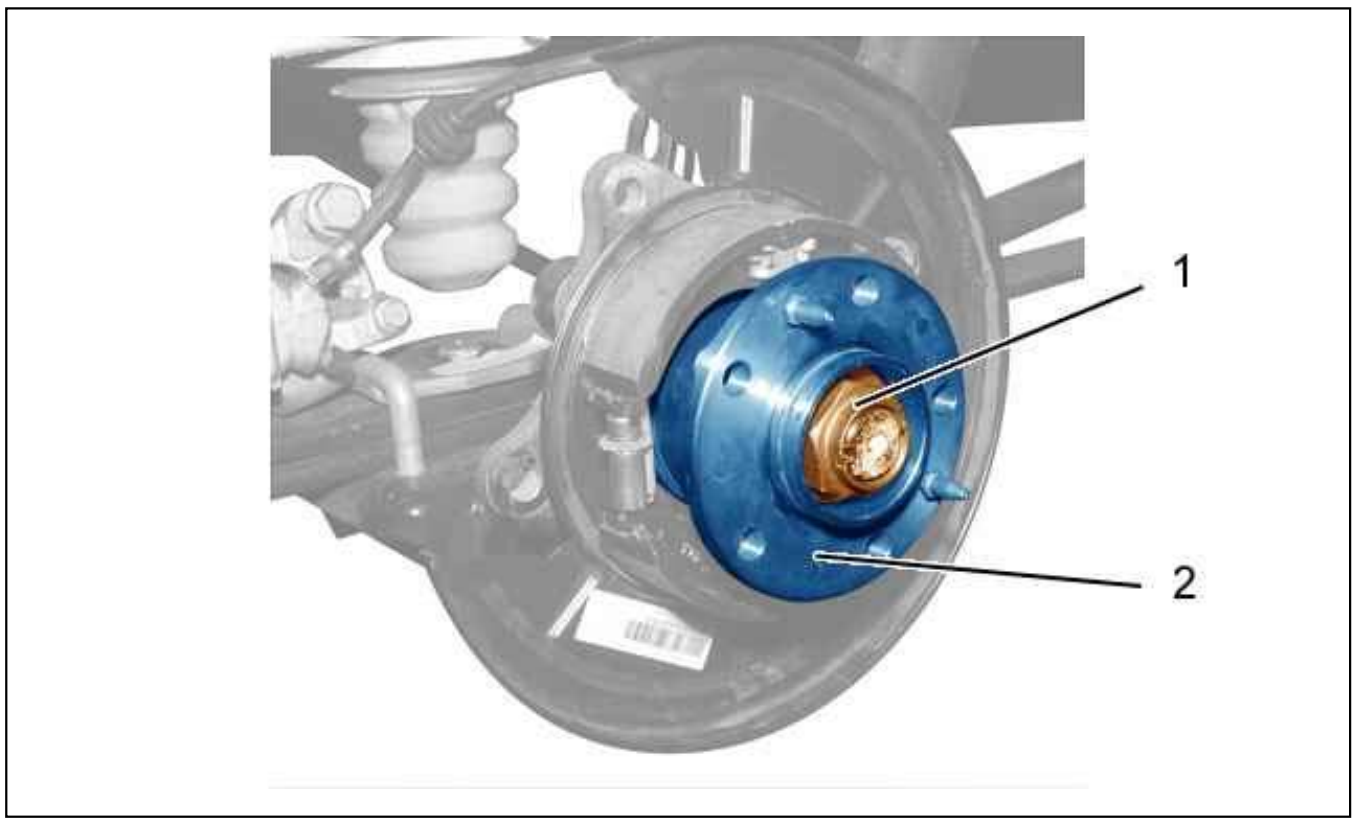

Figure : B3FP7L8D

Unlock the nut (1).
Remove :

- The nut (1)
- The rear hub (2)

3. Refitting

Refit :

- The rear hub (2)
- The nut (1)

N.B. : Use a new nut.

Tighten the nut (1) to 45 ± 1,5 daN.m.

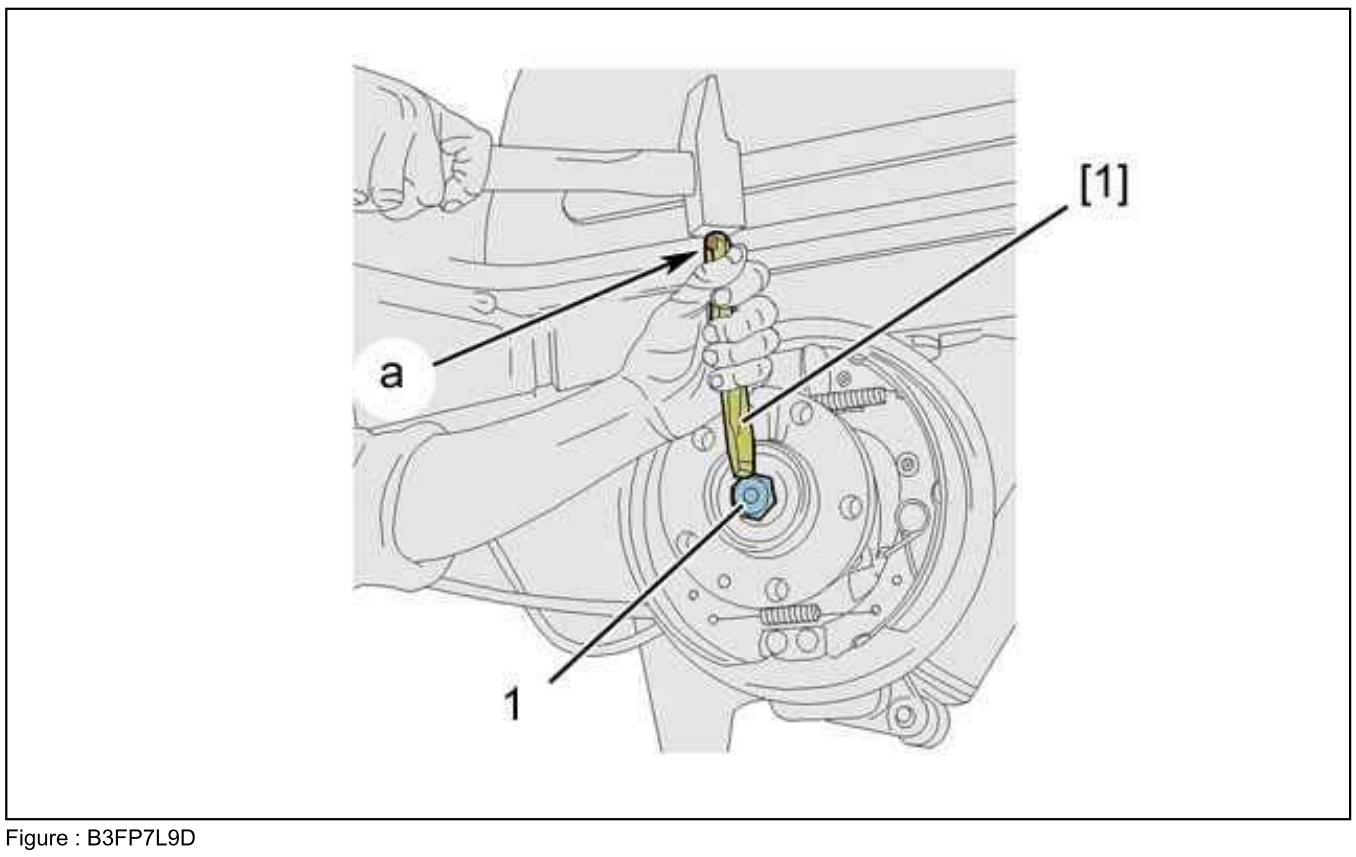

Figure : B3FP7L9D

Lock the nut (1) ; Using tool [1].
The flat part "a" of the tool should always face outwards.

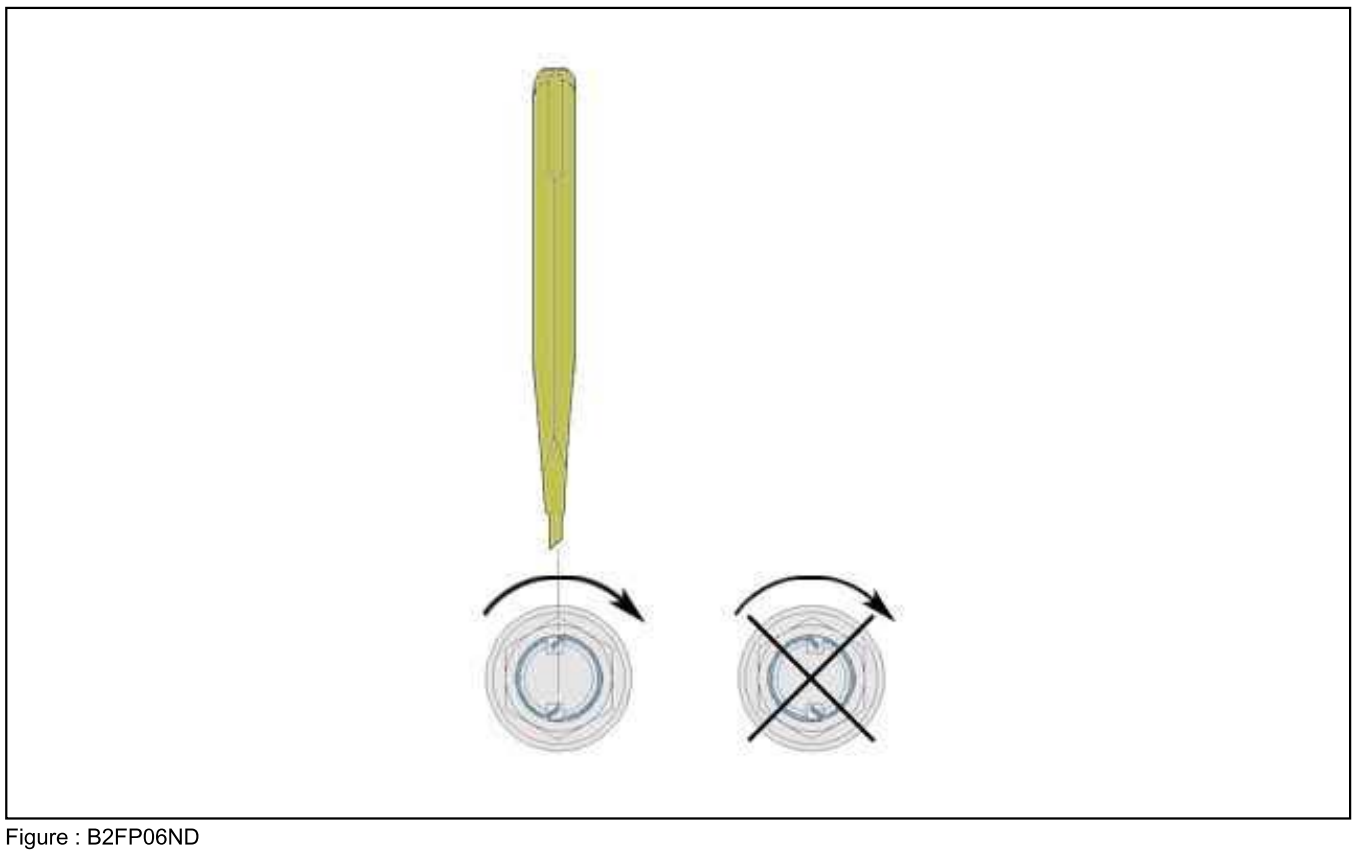

Figure : B2FP06ND

CAUTION : The nut collar must be locked in the opposite direction to tightening.

4. Additional operation

Refit :

- The brake disc (see the relevant operation)
- The wheels

Return the vehicle to its wheels.
Tighten the wheel bolts .

REMOVING - REFITTING : REAR SUSPENSION BLADE RUBBER BUSHES ON BODY

ESSENTIAL : Observe the safety and cleanliness recommendations.

1. Recommended tools

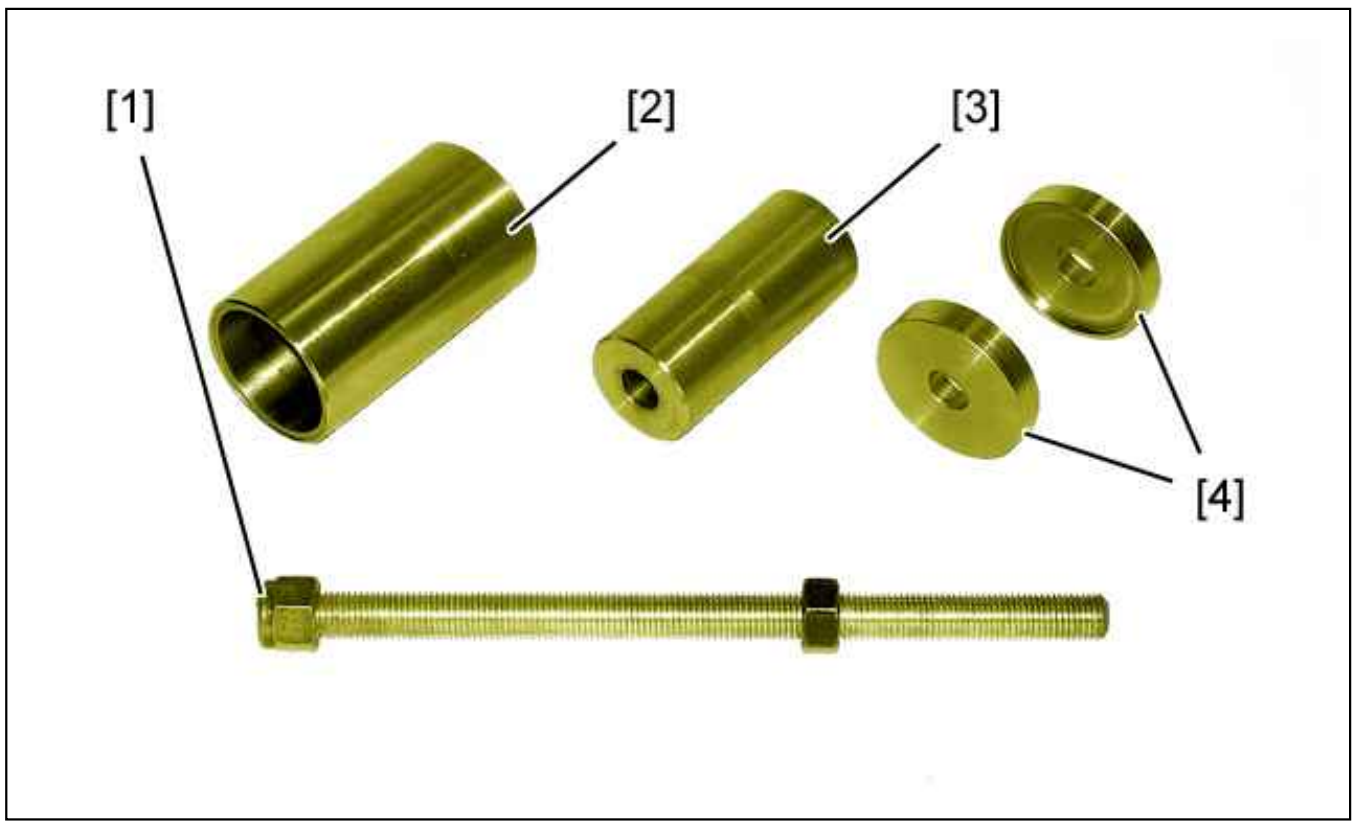

Figure : E5AP3KCD

Reference	Designation	Reference	Reference
[1]	Bolt-nut assembly	5709-T.U1	(-).0619.U1
[2]	removal cap - Refitting the rubber bushes	5709-T.U2	(-).0619.U2
[3]	Flexible mounting removal dolly	5709-T.U3	(-).0619.U3
[4]	Rubber bush refitting cups	5709-T.U4	(-).0619.U4

2. Removing

Disconnect the battery negative terminal.
Untighten the wheel screws (rear).

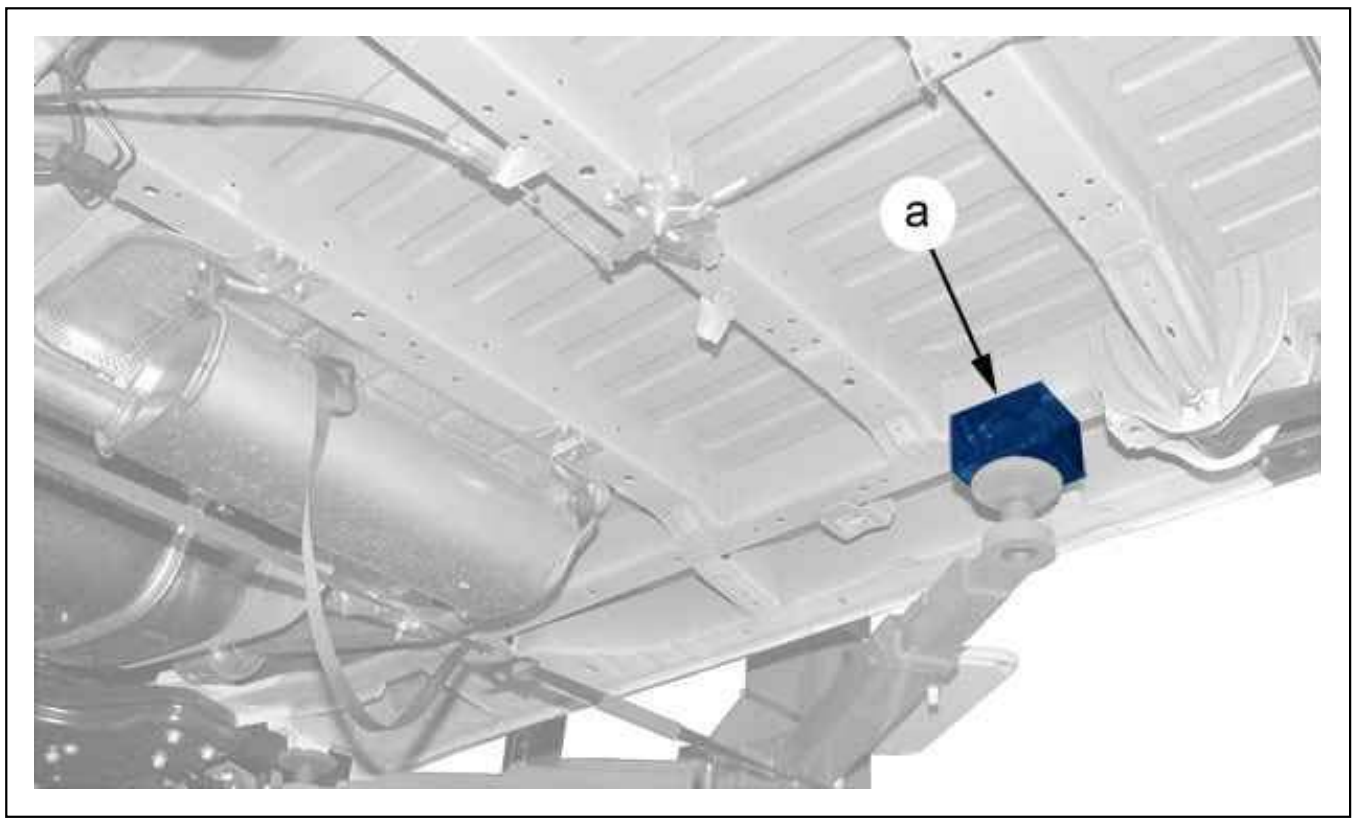

Figure : B3DP0DFD

CAUTION : When raising and jacking up the vehicle, place the rubber pads of the lift under the body reinforcements at "a".

Raise and support the vehicle, with the rear wheels hanging free.
Remove the rear wheels.
Position a lifting tool to support the rear suspension.

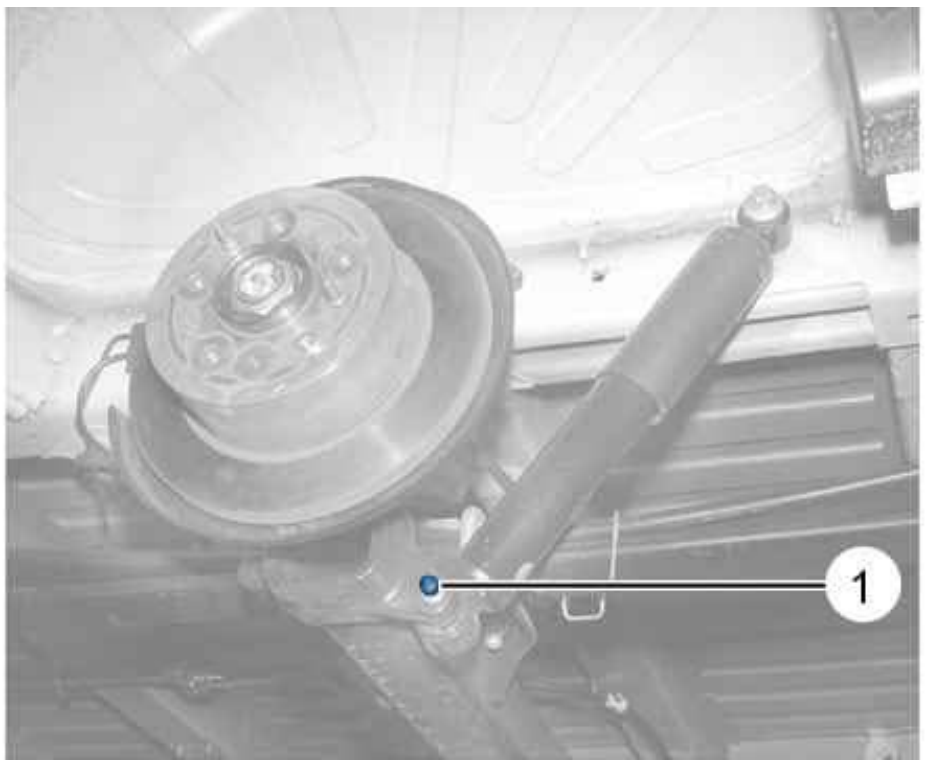

Figure : B3BP1G5D

Remove bolts (1).

Figure : B3DP0G1D

Remove the nuts (2).
Lower the rear suspension by a few centimetres to release the bolts (3).
Remove :

- The bolts (3)
- The suspension blade levers (4)

Raise the rear suspension by a few centimetres.
Refit bolt (1).

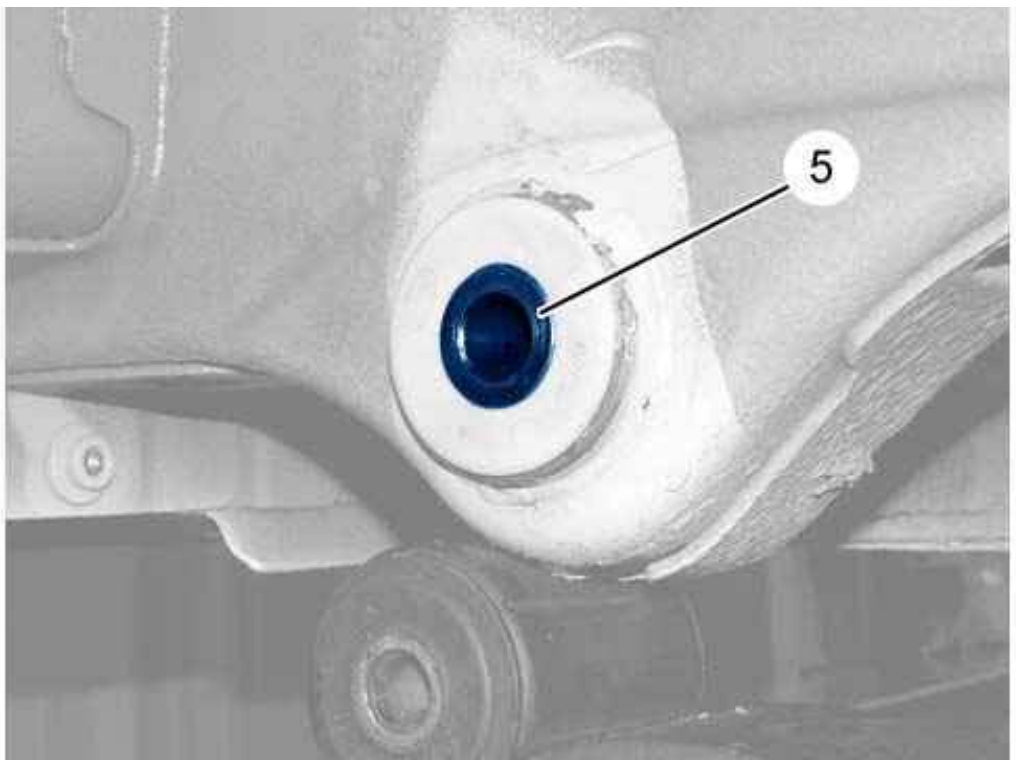

Figure : B3DP0G2D

Drive out the sleeve (5) ; Using a jet.

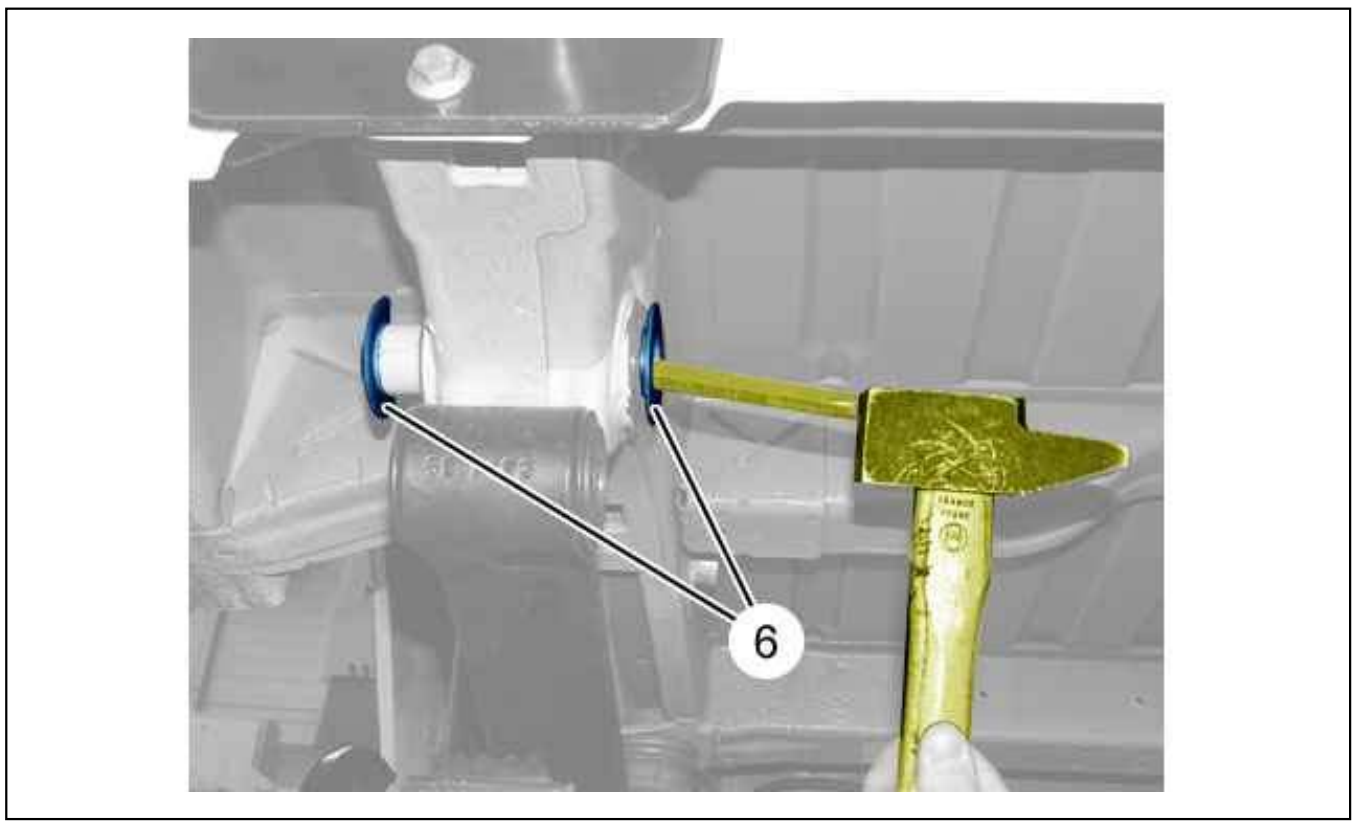

Figure : B3DP0G3D

Drive out the cup (6) (on each side).

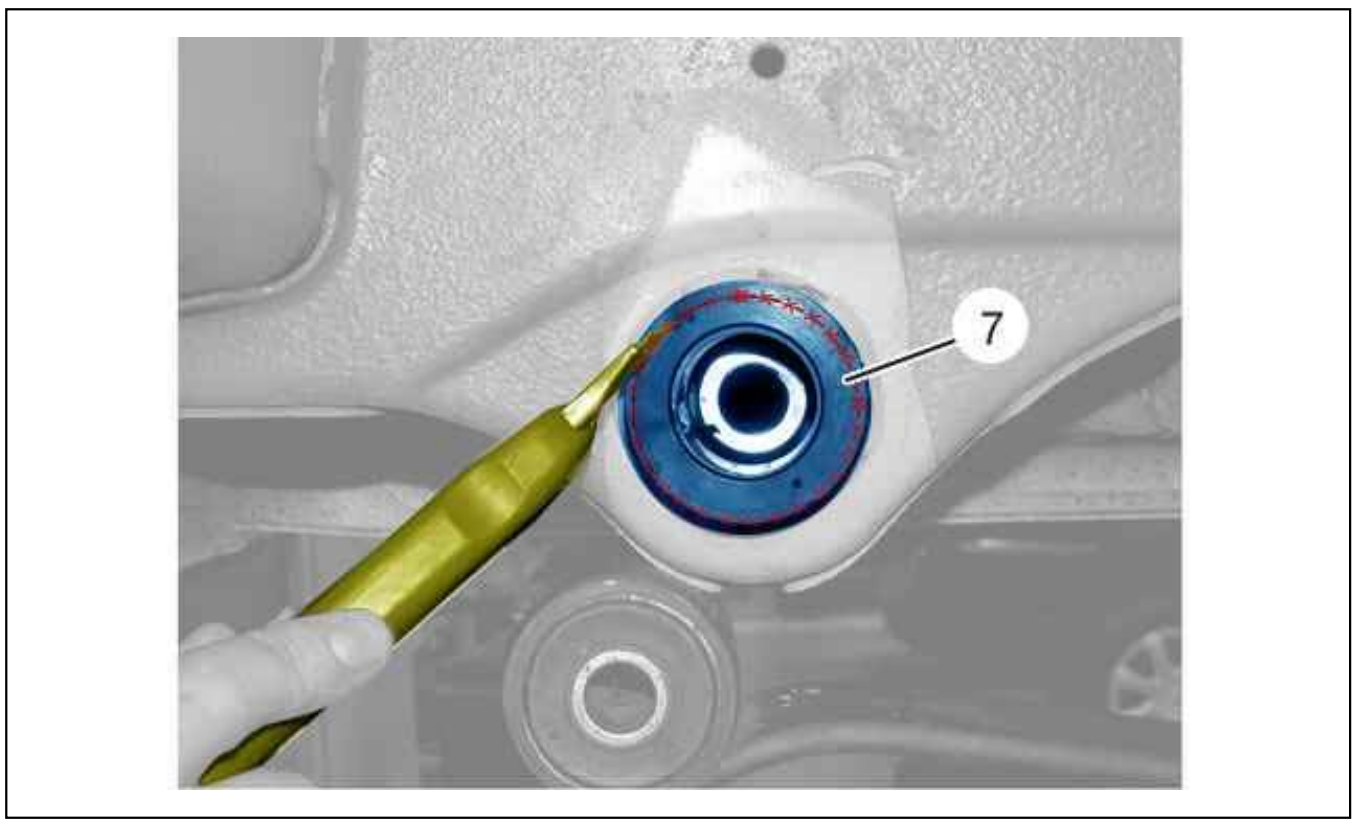

Figure : B3DP0G4D

Cut the collar of the rubber bush (7) (on each side).

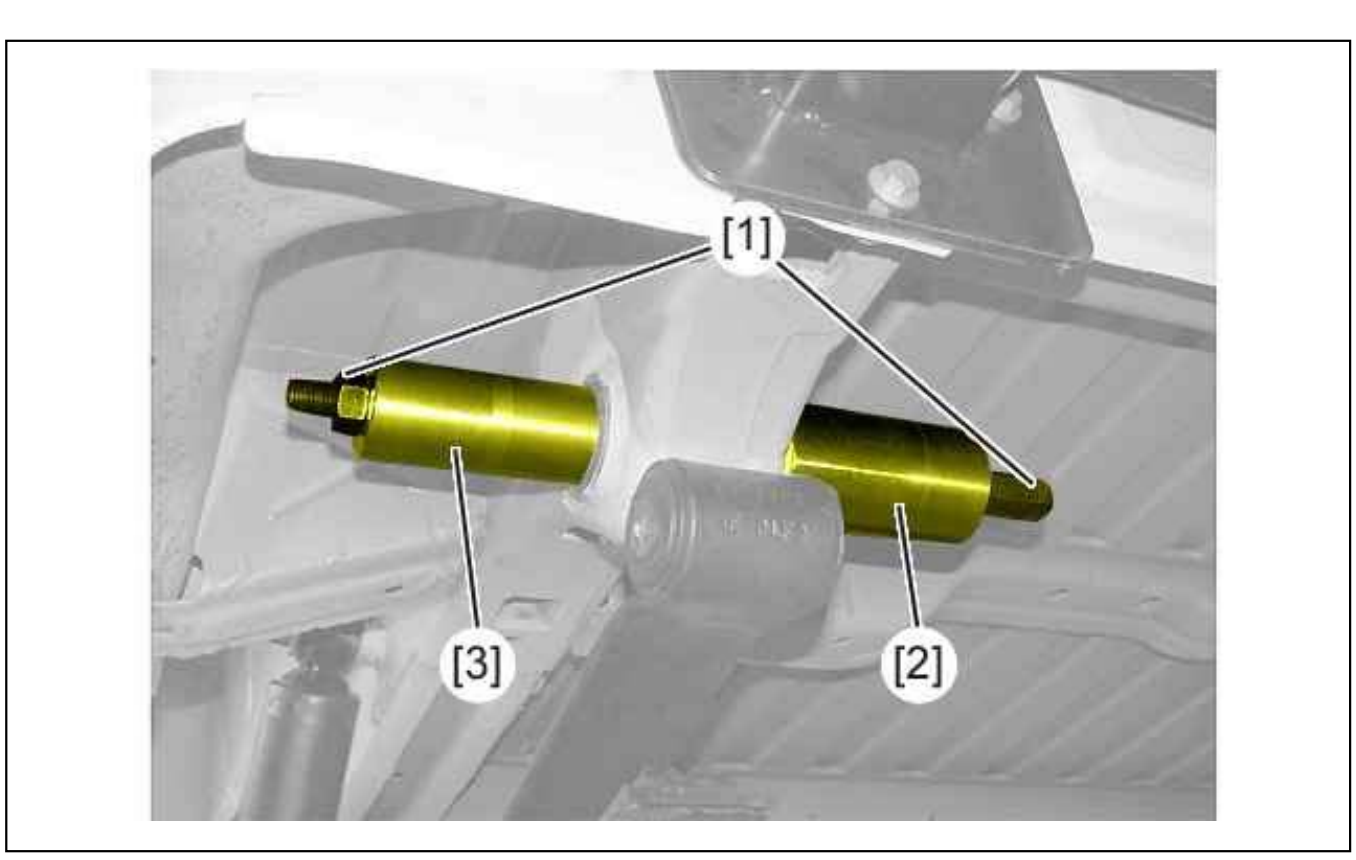

Figure : B3DP0G5D

Remove the rubber bushes (7) ; Using the tools [1], [2], [3].

3. Refitting

CAUTION : The components must be clean and free of any signs of abnormal wear or impacts; if any surface marking or paint flaking is visible, apply ar anticorrosion paint.

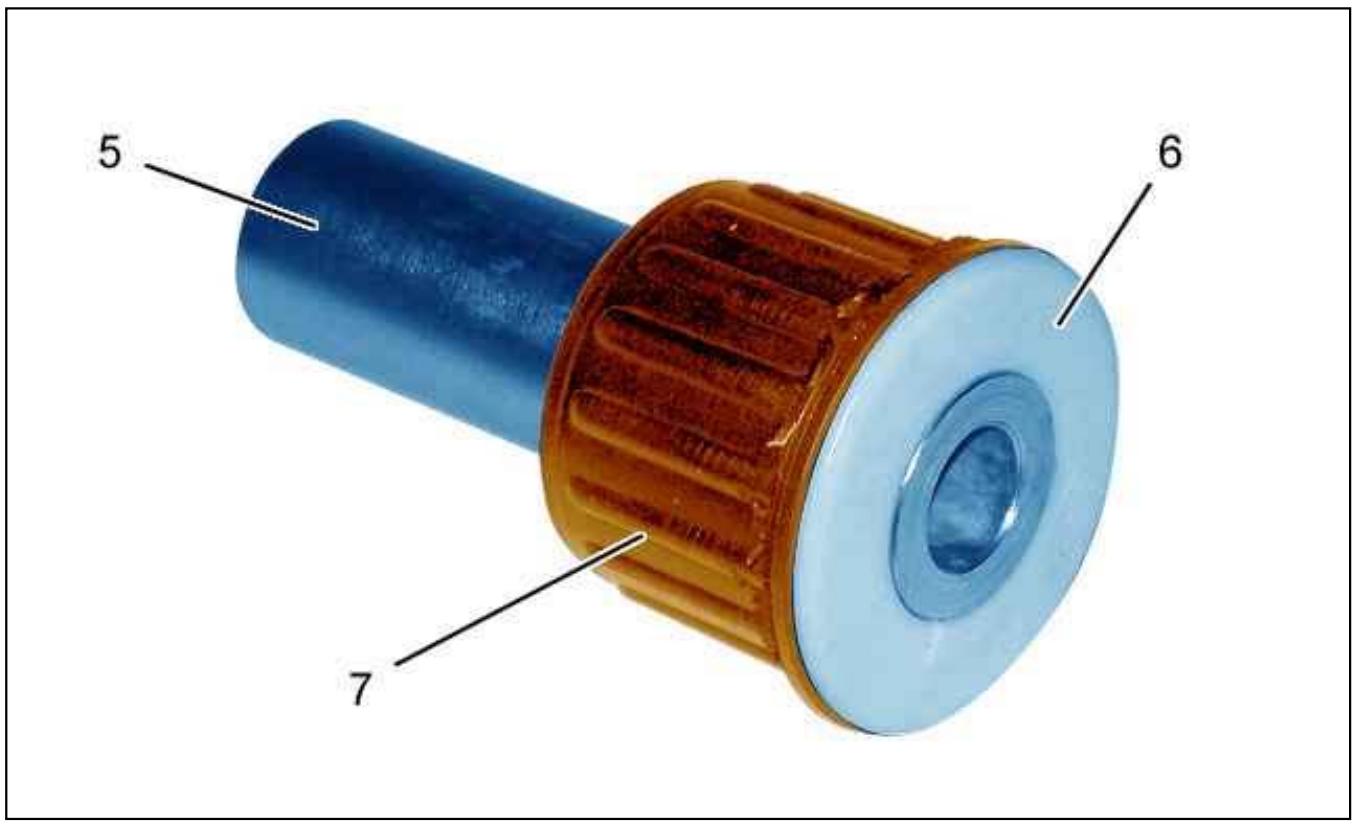

Figure : B3BP1G6D

Assemble the cup (6) - new rubber bush (7) assembly presenting the greatest resistance to assembly on the sleeve (5).
Pre-coat the rubber bushes (7) with grease used to fit the tyres.
Position the cup (6) - rubber bush (7) - sleeve (5) assembly on the vehicle (towards the outside).

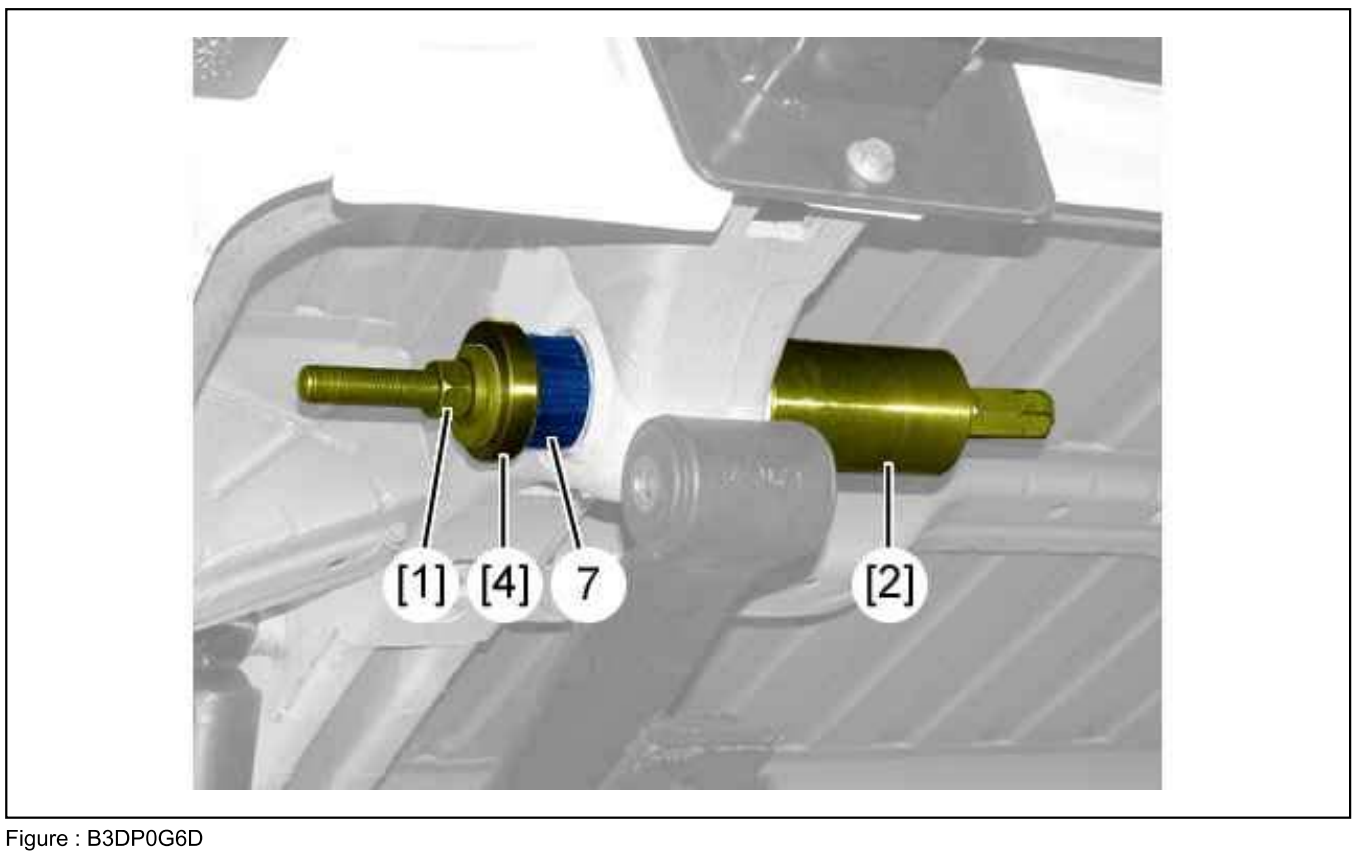

Figure : B3DP0G6D

Position the tools [1], [2], [4] on the vehicle.

N.B. : Put the tool [1] in place from the inner side.

Fit the cup (6) - rubber bush (7) - sleeve (5) assembly ; Using the tools [1], [2], [3].
Remove the tools [1], [2], [4].

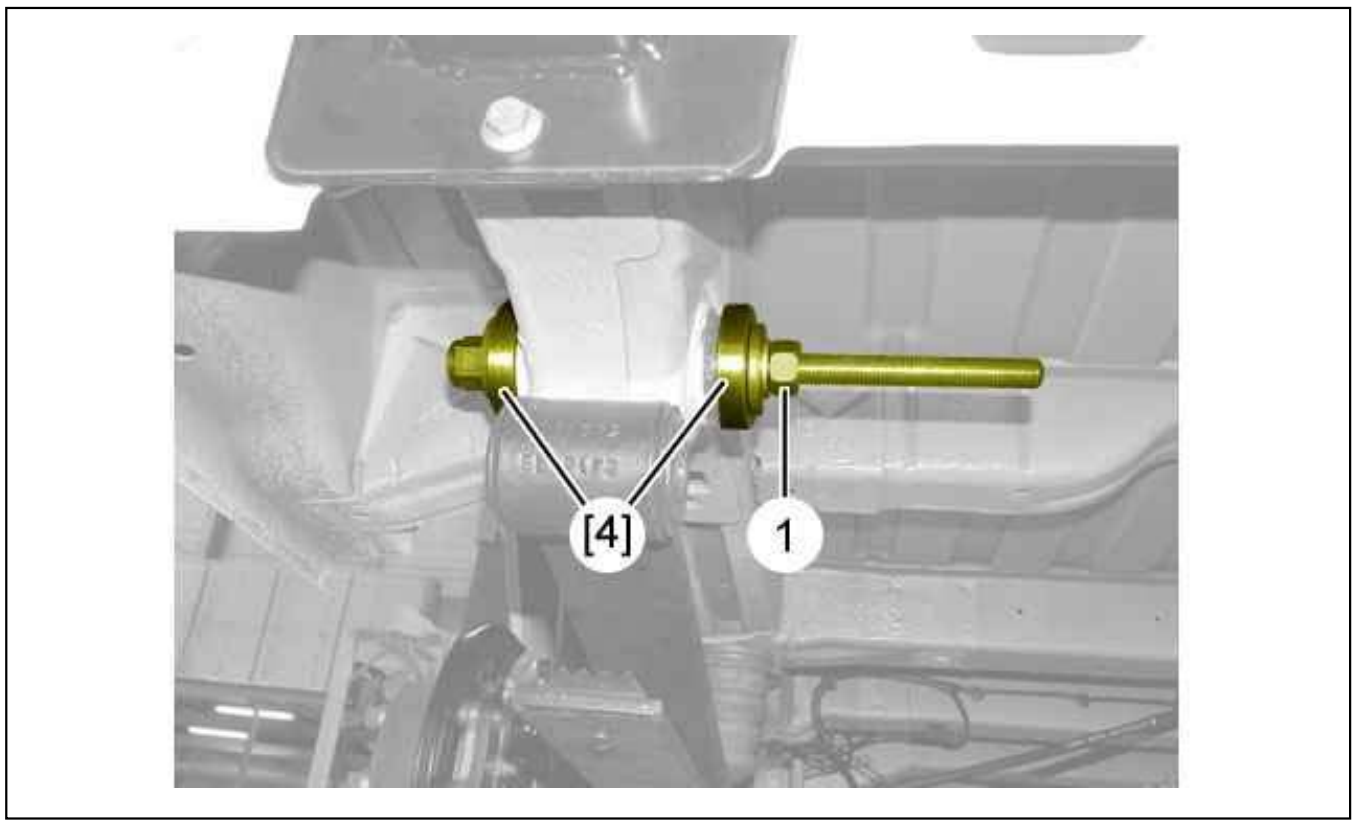

Figure : B3DP0G7D

Position the cup (6) - rubber bush (7) assembly (inner side).
Fit the cup (6) - rubber bushes (7) assembly to the limit of the vehicle’s structure ; Using the tools [1], [4].

CAUTION : Check the condition of the structure ; If surface marking or paint flaking is visible, apply an anticorrosion paint.

Remove the tools [1], [4].
Position a lifting tool to support the rear suspension.
Remove bolts (1).
Lower the rear suspension by a few centimetres.
Refit :

- The suspension blade levers (4)
- The bolts (3)
- The nuts (2) (without tightening)

Raise the rear suspension by a few centimetres.
Refit :

- The bolt (1) (without tightening)
- The rear wheels

Return the vehicle to its wheels.
Place the vehicle at its reference ride height (see the relevant operation).
Tighten :

- The nuts (2) to 14,5 ± 1,2 daN.m
- Screw (1) to 14,5 ± 1,2 daNm

Tighten the wheel bolts .
Reconnect the battery negative terminal.

CAUTION : Perform the operations to be carried out following reconnection of the battery.

TIGHTENING TORQUES : DRIVESHAFTS

1. Recommendation

CAUTION : Tighten the driveshaft nuts ; With the help of a torque spanner.

2. Tightening torques : Nut ; Driveshaft bearing

Vehicles	Nut	Front driveshaft bearing
C-ZERO	16 daNm	-
C1	21,6 daNm	-
C2	24,5 daNm	1 daNm
C3	24,5 daNm	2 daNm
C3 Pluriel		
C3 (A51)	24,5 daNm (30 mm spanner)	2 daNm
	32,5 daNm (35 mm spanner)	
C3 (Ai51 Mercosur)	24,5 daNm (30 mm spanner)	2 daNm
	32,5 daNm (35 mm spanner)	
DS3	24,5 daNm (30 mm spanner)	2 daNm
	32,5 daNm (35 mm spanner)	
C-ELYSEE	24,5 daNm	2 daNm
C-ELYSEE (China)	24,5 daNm	2 daNm
DS5	31,2 daNm	2 daNm
DS5 (B81 China)	31.2 daNm	2 daNm
C4	32 daNm	1,8 daNm
C4 (B7)	30,5 daNm	2 daNm
C4 I (B73 China)	32,5 daNm	2 daNm
C4 (B73 Russia)	32,5 daNm	2 daNm
C4 (B73 Mercosur)	32,5 daNm	2 daNm
C3 Aircross (Ai58 Mercosur)	24,5 daNm (30 mm spanner)	2 daNm
	32,5 daNm (35 mm spanner)	
C3 Picasso (Ai58 Mercosur)	24,5 daNm (30 mm spanner)	2 daNm
	32,5 daNm (35 mm spanner)	
C3 Picasso	32,5 daNm	2 daNm
C4 PICASSO		
C4 PICASSO (B78)	28,5 daNm	
XSARA PICASSO	32,5 daNm	
CITROEN C5 (X3), (X4)		
CITROEN C5 (X7), (XW)		
Berlingo	31,2 daNm	2 daNm
C6	34,5 daNm	2 daNm
C8		
DISPATCH	34,5 daNm	2 daNm
C15	Pre-tighten to 10 daNm	2 daNm
	Angular tightening of 60°	
NEMO	Pre-tighten to 7 daNm	-
	Angular tightening of 55°	-
RELAY	Pre-tighten to 15 daNm	-
	Angular tightening of 35°	-

3. Tightening torques : 4 wheel drive transmission

Vehicles	Transverse driveshaft nut (Front / Rear)	Longitudinal bearing bolt	Longitudinal driveshaft nuts on rear axle controlled clutch
C-Crosser	16 daNm	4 daNm	5,4 daNm
C4 Aircross	14,4 daNm (Nut with pin)	4 daNm	5,4 daNm
	27 daNm (Nut without pin)		

4. Tightening torques : Hybrid vehicles

Vehicles	Front driveshaft nut	Rear driveshaft nut	Front driveshaft bearing	Rear driveshaft bearing
DS5	32,5 daNm	34,5 daNm	2 daNm	1 daNm

GENERAL SPECIFICATIONS : DRIVESHAFTS

1. Application

	-		Marking on driveshafts		
Engine code	Engine legislative type	Type of gearbox	Road wheel side	Gearbox end	make
P22DTE	4HV	MLGU5	UF3-270	GI3-27	GKN
P22DTE+	4HU	MLGU6	UFi4600	GIi4600	GKN

2. Data

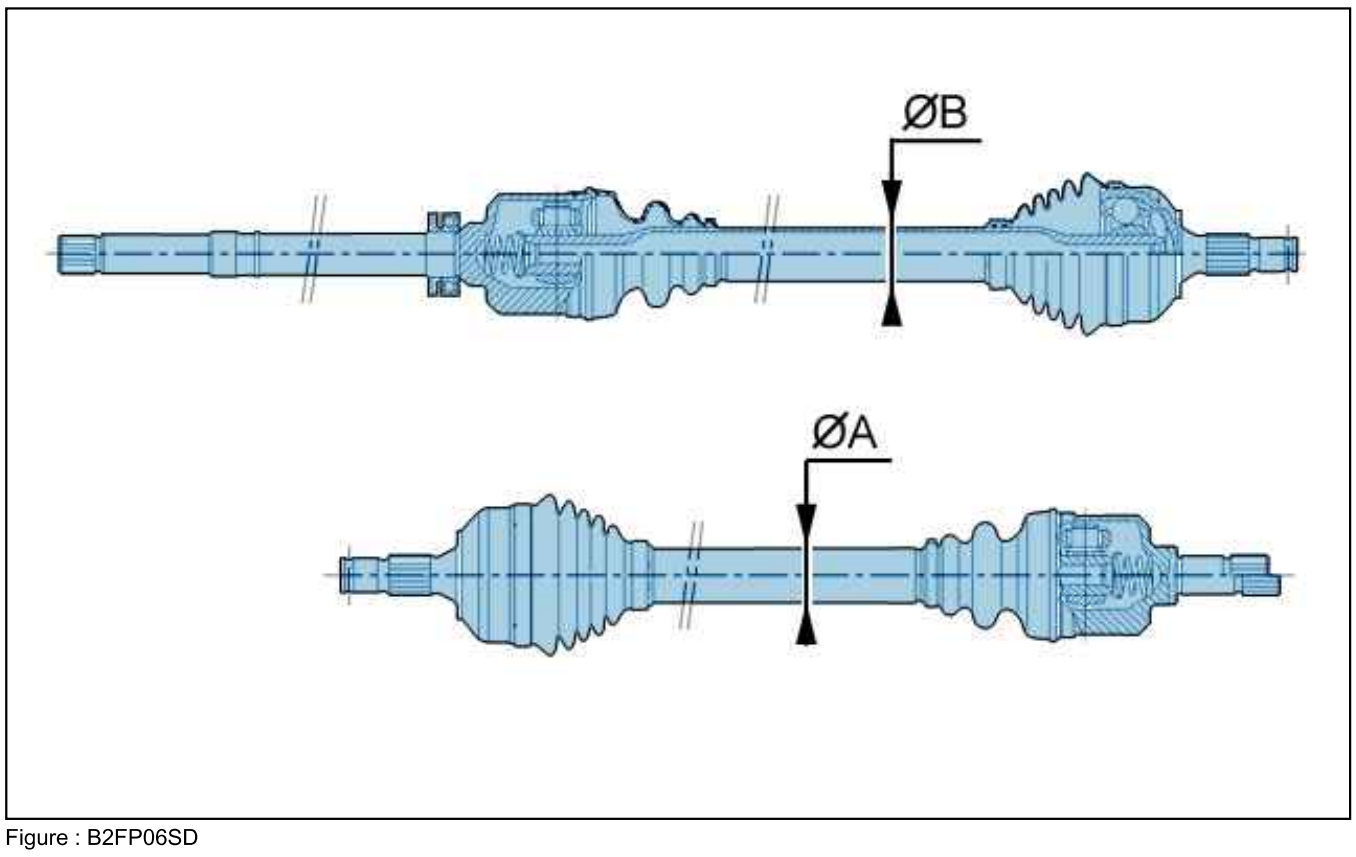

Figure : B2FP06SD

	Housing			Shaft dia. (in mm)		Driveshaft gaiters	
Engine code	Road wheel side	Gearbox end	Housing dia. (in mm)	Diameter A	Diameter B	Road wheel side	Gearbox end
P22DTE	UF3-270	GI3-27	98,4	T30,2	T30,2	TP	NEO
P22DTE+	UFi4600	GIi4600	106	T31,6	T31,6	TP	NEO

Abbreviations :

- T30,2 : Tubular drive shafts (diameter 30,2 mm)
- T31,6 : Tubular drive shafts (diameter 31,6 mm)
- TP : Thermoplastic
- NEO : neoprene

REMOVING - REFITTING : DRIVESHAFTS

ESSENTIAL : Observe the safety and cleanliness recommendations .

1. Tooling

tool	Reference	Designation
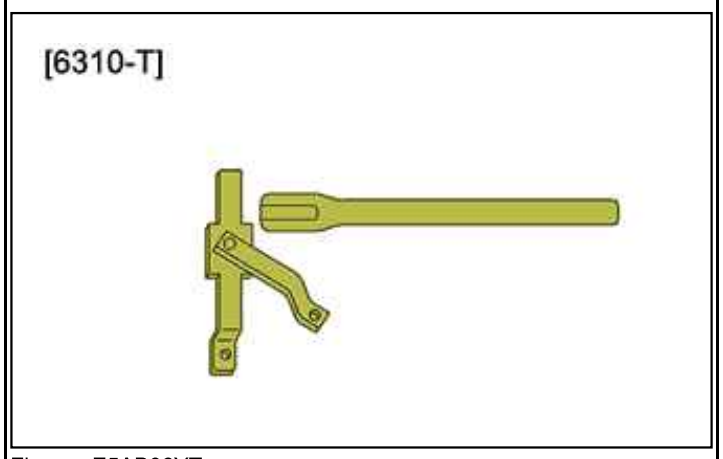 Figure : E5AB06YT	[6310-T]	hub immobilising tool
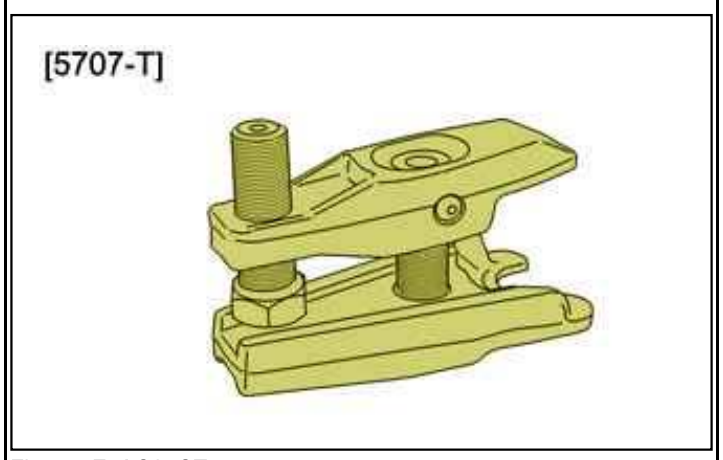 Figure : E5AG05GT	[5707-T]	ball-joint extractor
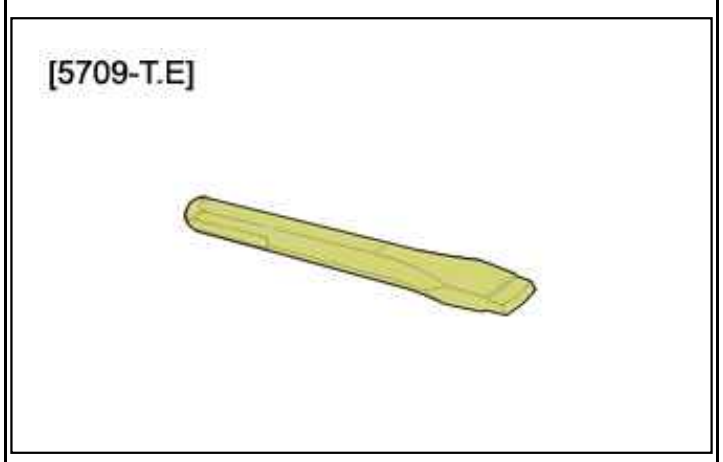 Figure : E5AB0EHT	[5709-T.E]	locking punch

2. Removing

Place the vehicle on a 2-post lift.
Slacken the front wheel bolts.
Disconnect the battery negative terminal.
Lift and support the vehicle.
Remove :

- The protective panel under the engine
- The right-hand protector under the engine
- The front wheel bolts
- The front wheels

Drain gearbox (see the relevant operation).

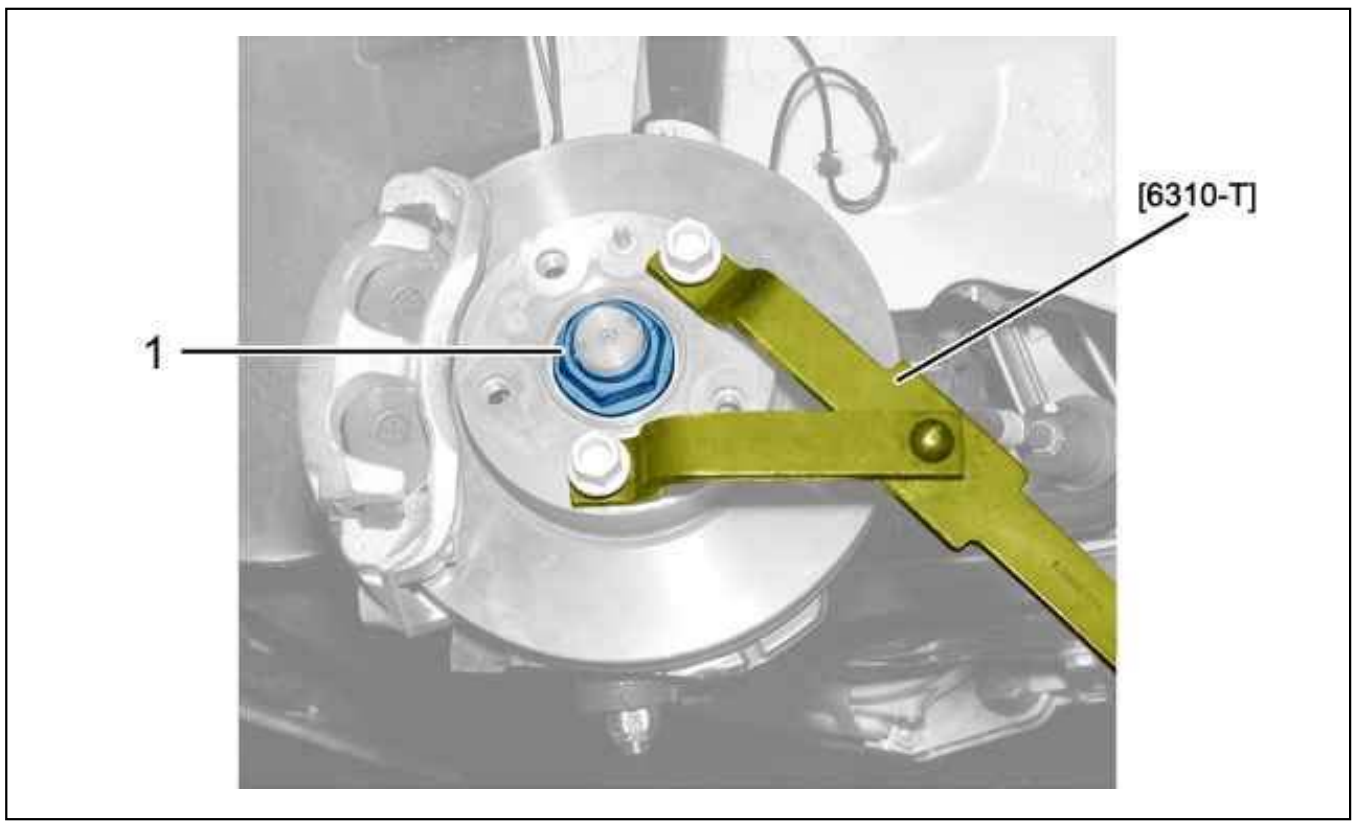

Figure : B2FG036D

Unlock the nut (1).
Fit the tool [6310-T].
Remove :

- The nut (1)
- The tool [6310-T]

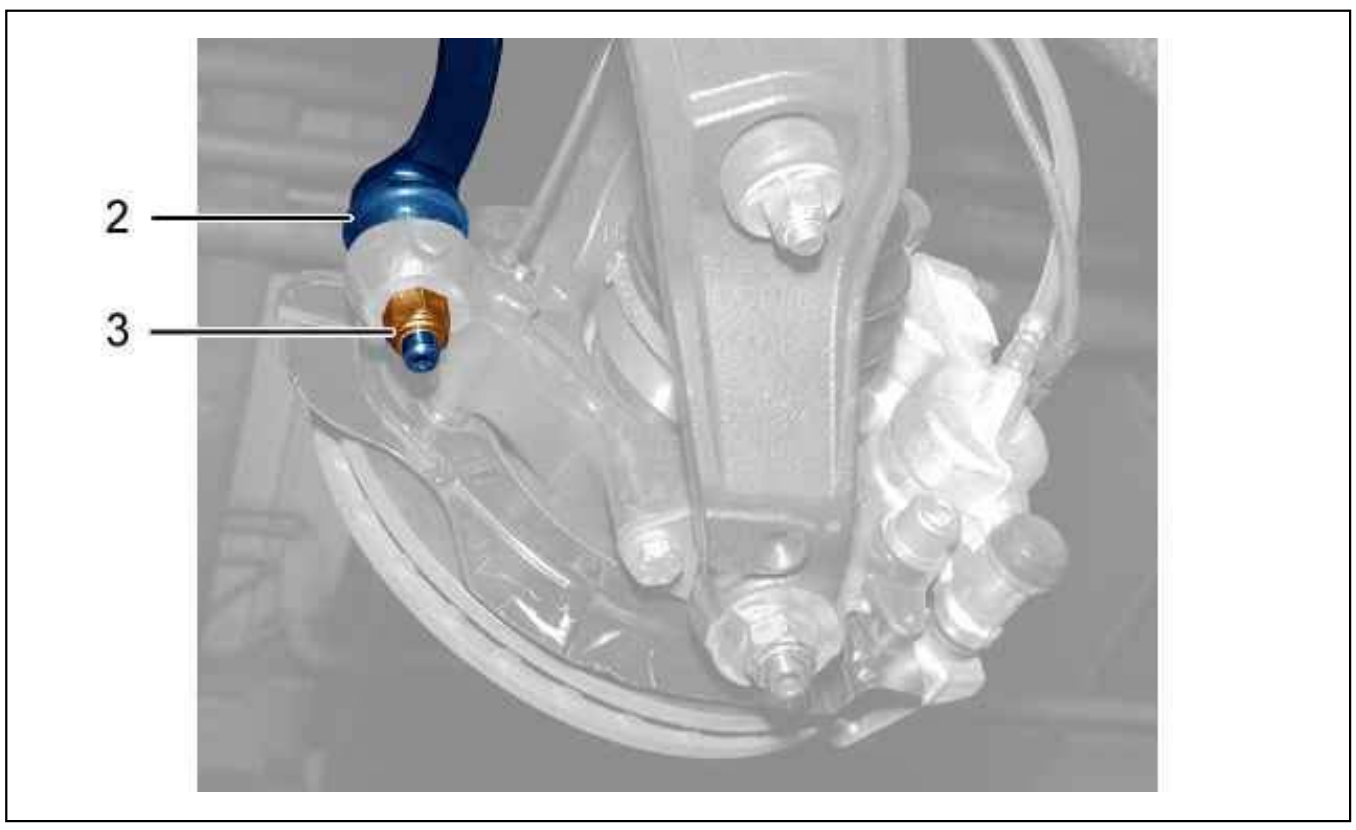

Figure : B3FP7NHD

Remove the nut (3).
Uncouple the steering ball-joint (2) ; Using tool [5707-T].

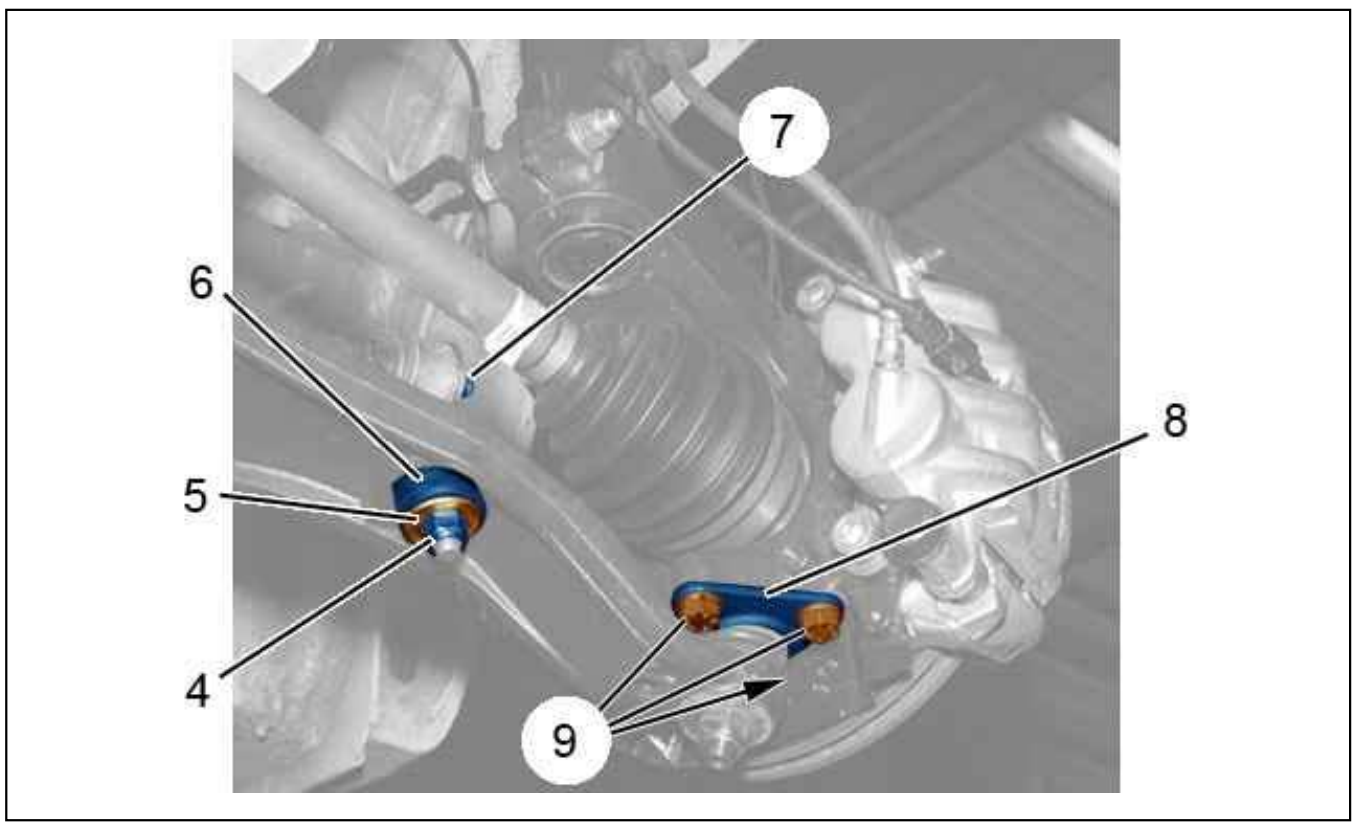

Figure : B3FP7NJD

Remove :

- The nut (4)
- The washer (5)
- The silentblock (6)

Unscrew nut (7).
Remove the 3 bolts (9).
Move the hub away from the ball joint housing (8) to disengage the driveshaft .

2.1. On the left-hand side

Remove the driveshaft .

2.2. On the right-hand side

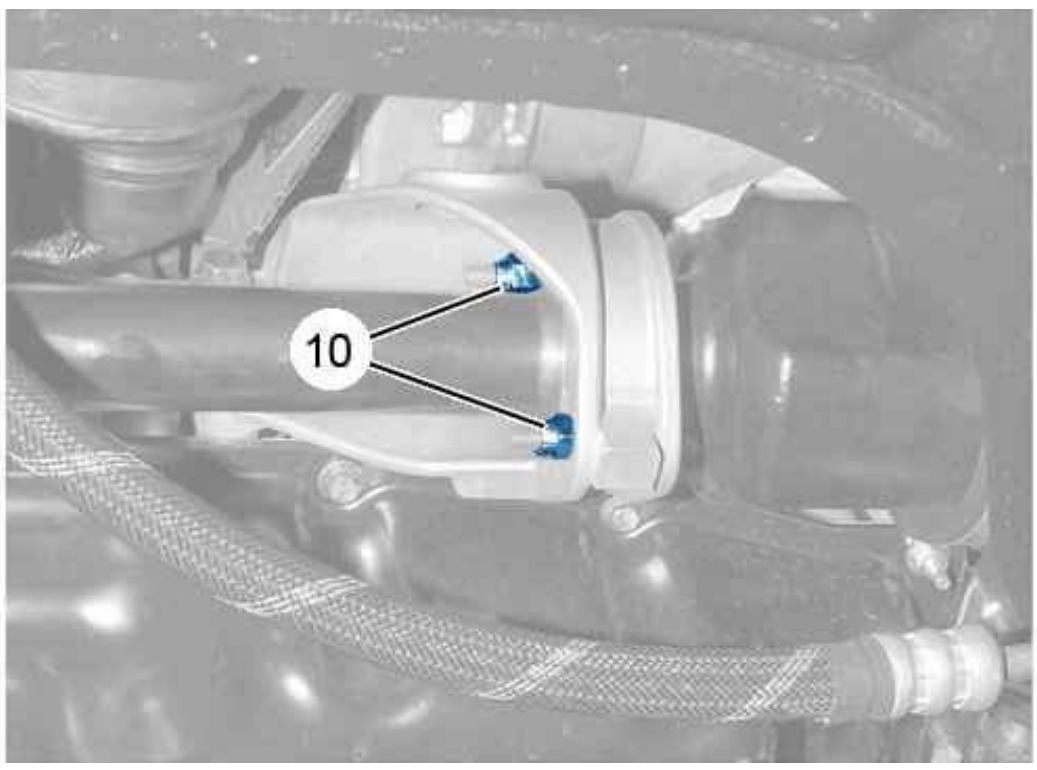

Figure : B2FP06UD

Unscrew the nuts (10).
Remove the driveshaft .

3. Refitting

CAUTION : Always replace the driveshaft seals during each operation (see the relevant operation).

Coat the interval between the lips of the driveshaft seals with grease.

3.1. On the right-hand side

Engage :

- The driveshaft in the driveshaft bearing
- The splines of the driveshaft in the differential
- The splines of the driveshaft in the hub of the right-hand wheel

Tighten the nuts (10).

3.2. On the left-hand side

Engage :

- The splines of the driveshaft in the differential
- The splines of the driveshaft in the hub of the left-hand wheel

3.3. Refitting (continued)

Couple the ball joint housing (8) and the hub .
Refit :

- The 3 bolts (9) ; Tighten to 11,5 ± 0,4 daN.m
- The silentblock (6)
- The washer (5)
- The nut (4) ; Tighten to 5,6 ± 0,5 daN.m

Retighten the nut (7) ; Tighten to 5,6 ± 0,5 daN.m.

N.B. : Use new nuts (3) and (1).

Couple the steering ball joint (2) to the hub .
Refit :

- The nut (3) ; Tighten to 8 ± 0,7 daN.m
- The tool [6310-T]
- The nut (1) ; Tighten to 15 ± 1,5 daN.m ; Angular tightening to 35°

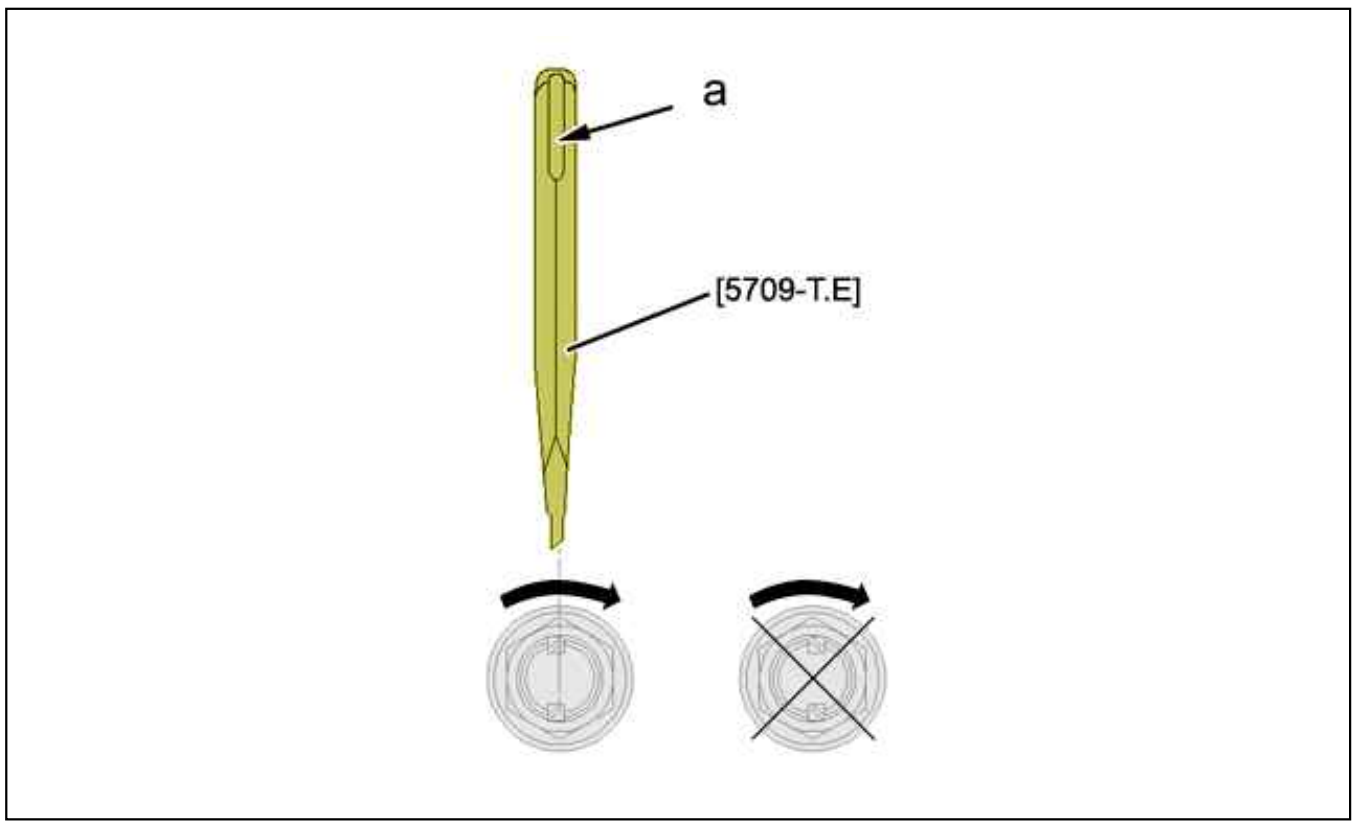

Figure : B2FG039D

Lock the transmission nut using the tool [5709-T.E].
The flat side "a"of the tool [5709-T.E] must always be towards the outside.

ESSENTIAL : The nut collar must be locked in the opposite direction to tightening.

Remove the tool [6310-T].
Refit :

- The front wheels
- The front wheel bolts
- The right-hand protector under the engine
- The protective panel under the engine

Return the vehicle to its wheels.
Tighten the front wheel bolts .
Fill gearbox with oil and ensure correct level (see the relevant operation).

CAUTION : Perform the operations to be carried out following reconnection of the battery.

Reconnect the battery.

REPLACEMENT : DRIVESHAFT GAITERS

ESSENTIAL : Observe the safety and cleanliness recommendations .

1. Tooling

tool	Reference	Designation
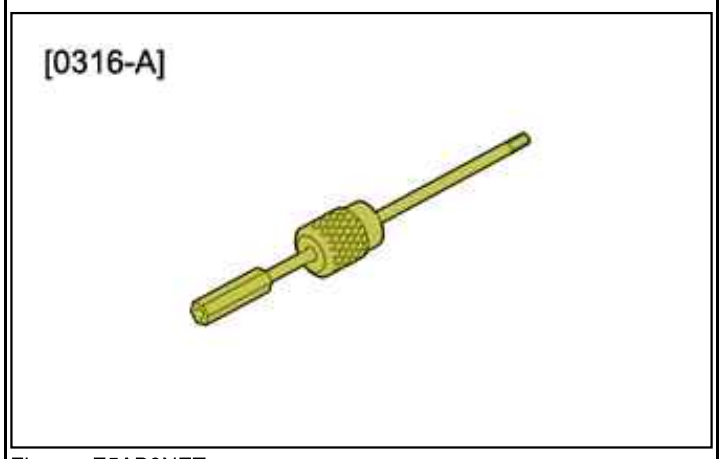 Figure : E5AB0NET	[0316-A]	inertia extractor
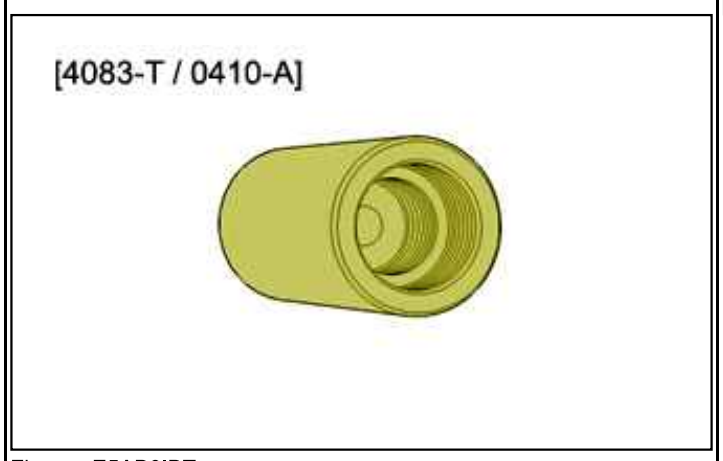 Figure : E5AB0IBT	[4083-T] [0410-A]	Stub axle removal threaded sleeve
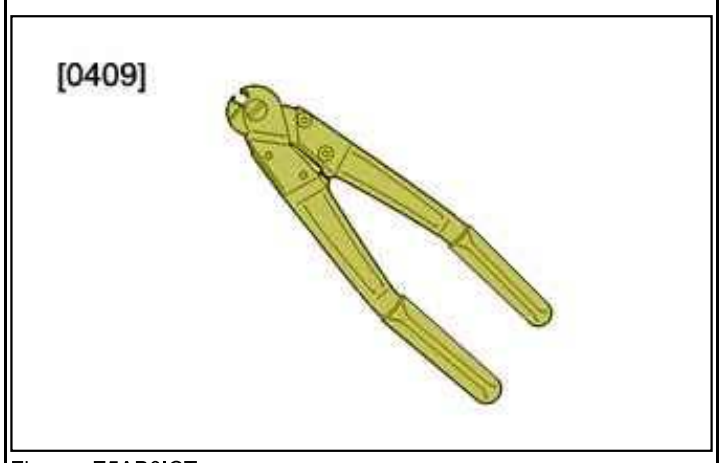 Figure : E5AB0ICT	[0409]	Pliers for fitting driveshaft gaiter clips
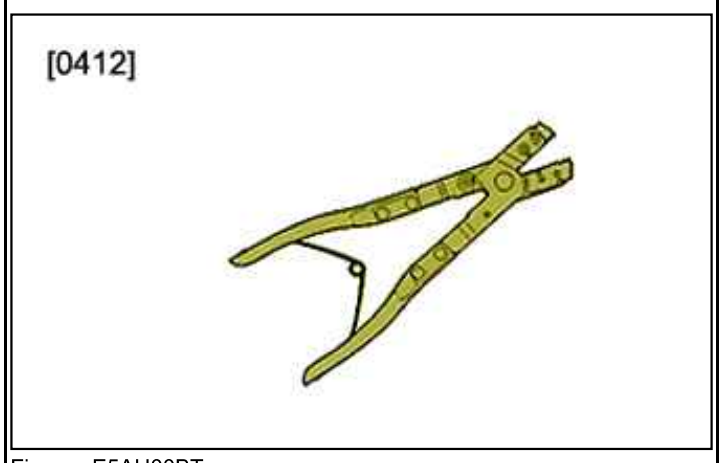 Figure : E5AH00BT	[0412]	hose clip pliers OETIKER
	[0413]	Pliers for wing clips

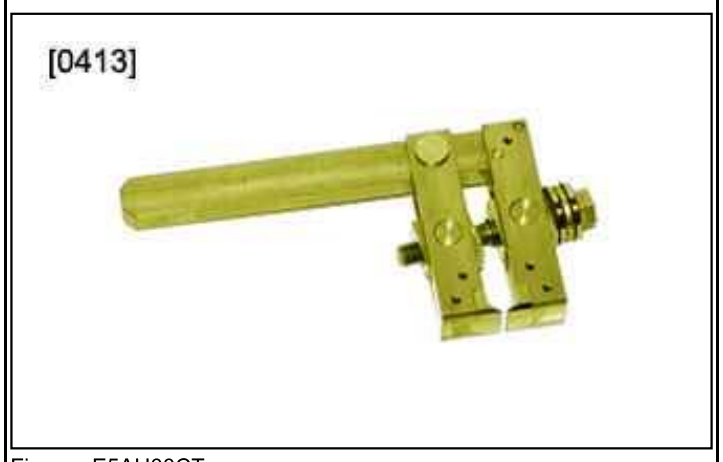

Figure : E5AH00CT

2. Identification

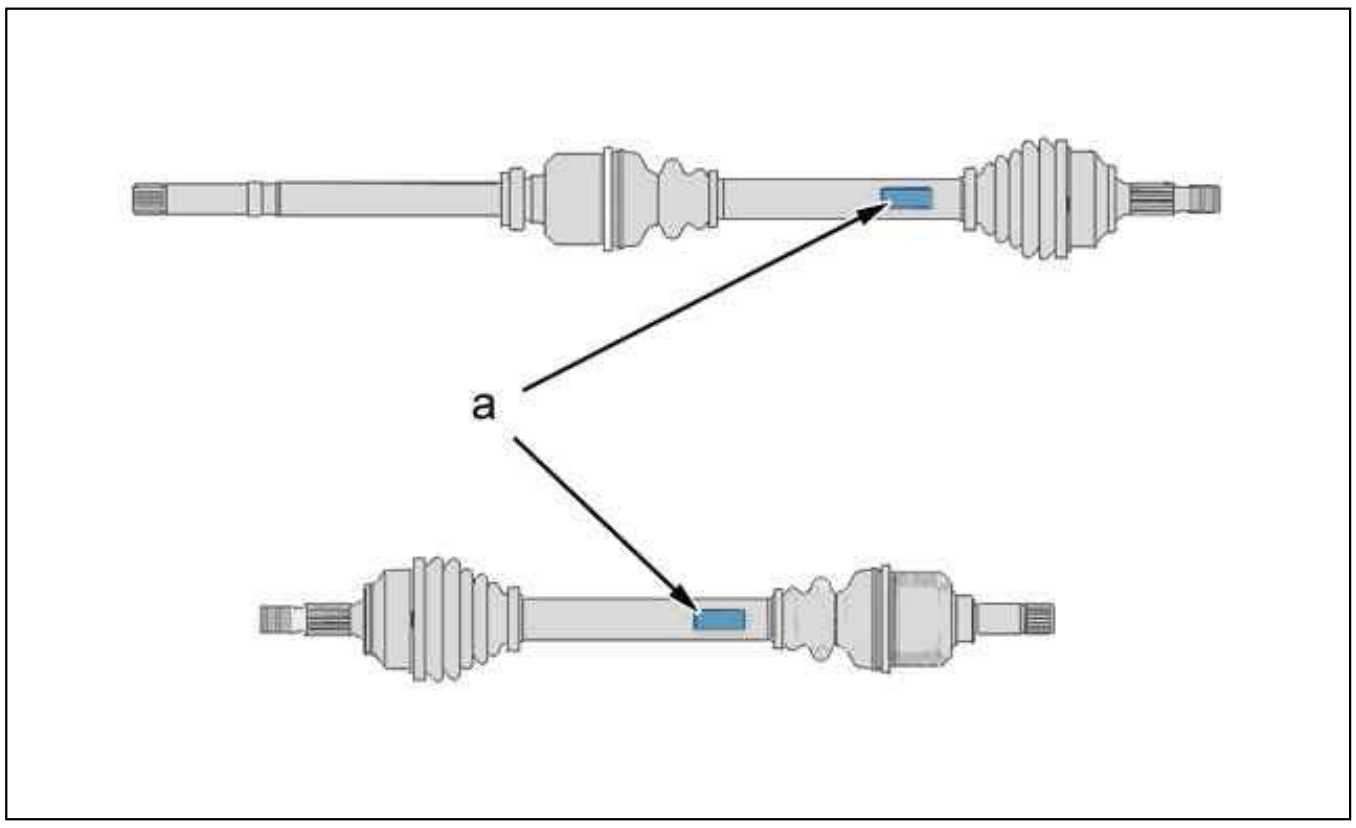

Figure : B2FH00SD

The drive shafts are identified by a label stuck to the shaft (at "a") containing : The supplier reference.
List of suppliers :

- GKN
- PSA
- NTN

3. Preliminary operations

N.B. : The ABS crowns are discontinued (the function fulfilled by the crowns is transferred to the front wheel bearings).

Remove the drive shafts.
Support the drive shaft in a vice fitted with soft jaws.

N.B. : Before removal : Mark the positions of the driveshaft gaiters.

4. Replacement : Wheel end gaiter

CAUTION : Always replace the clips and circlips that have been removed.

4.1. PSA and NTN driveshafts

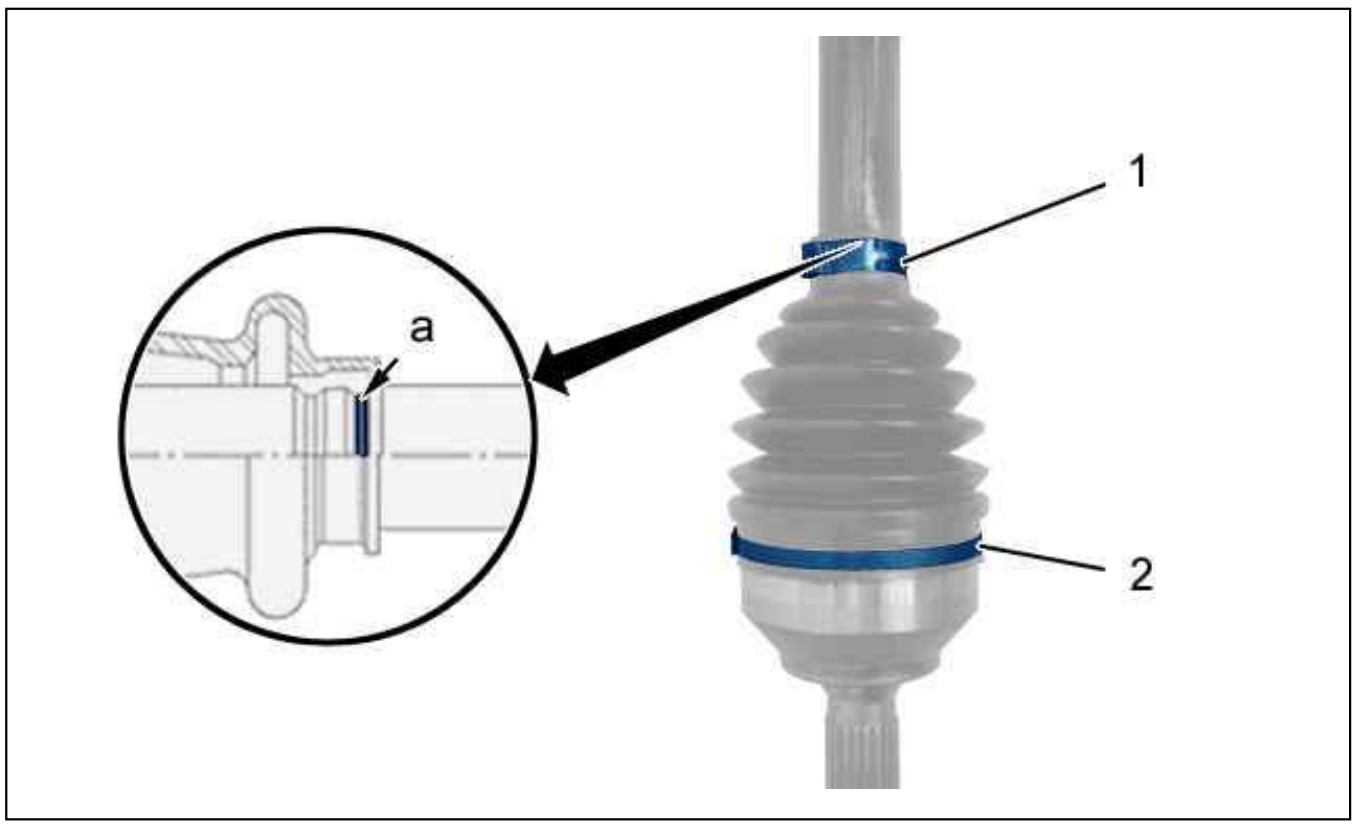

Figure : B2FH002D

Remove the clips (1) and (2) ; Using a hacksaw.

N.B. : Mark the gaiter position on driveshafts not having position grooves at "a".

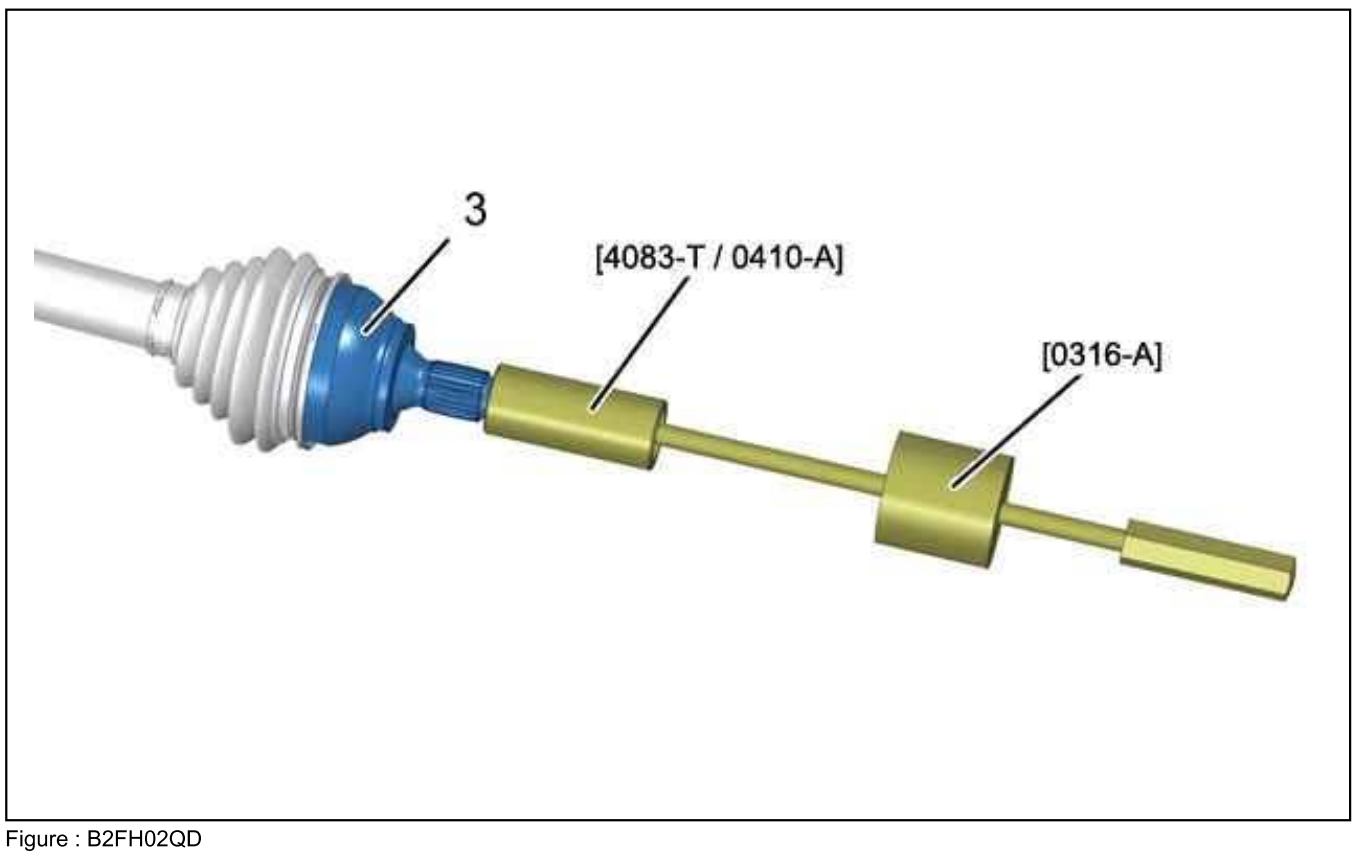

Figure : B2FH02QD

Remove the housing (3) ; Using the tools [0316-A], [4083-T / 0410-A].

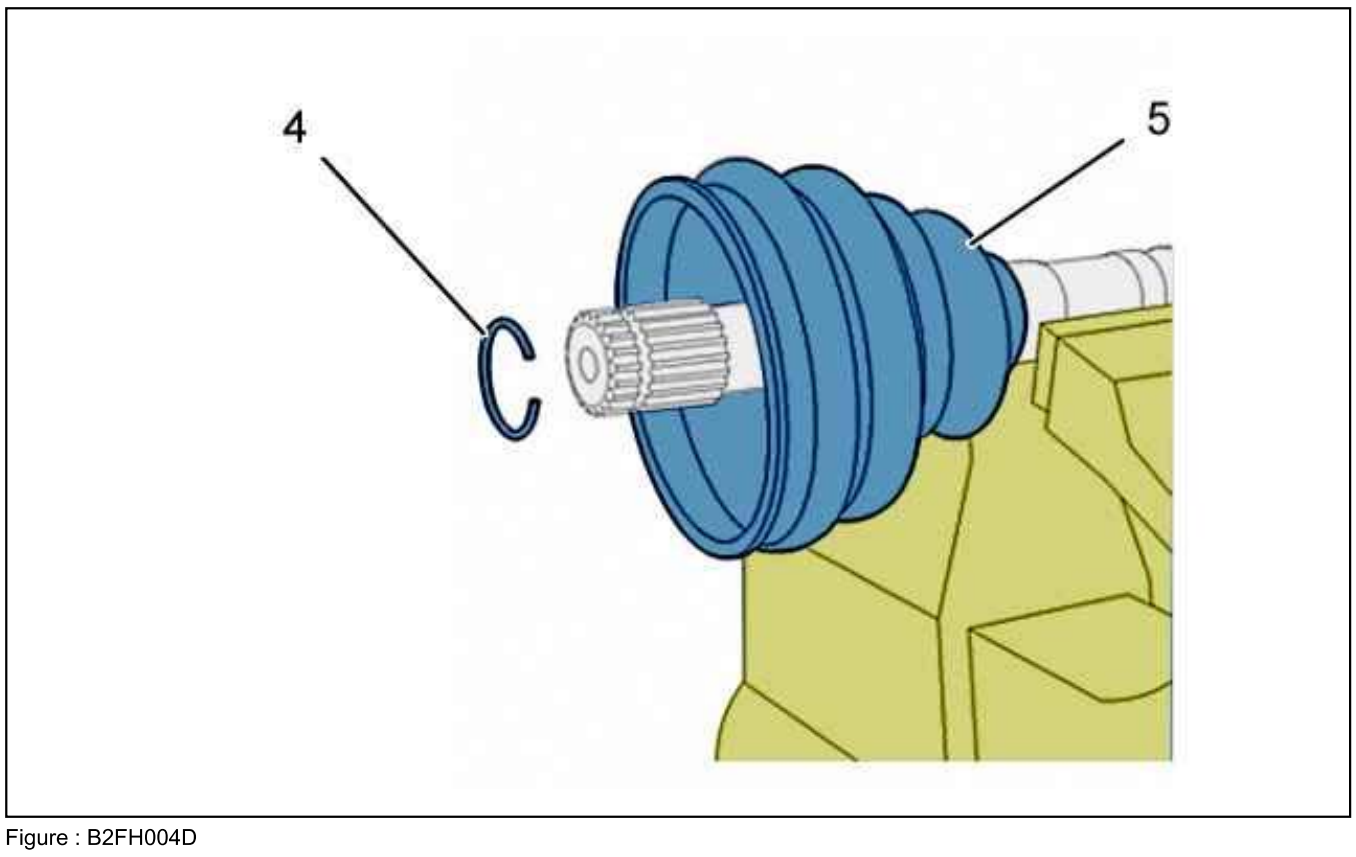

Figure : B2FH004D

Remove :

- The stop ring (4)
- The drive shaft gaiter (5)

Refit :

- The drive shaft gaiter (5) (new)
- The stop ring (4) (new)

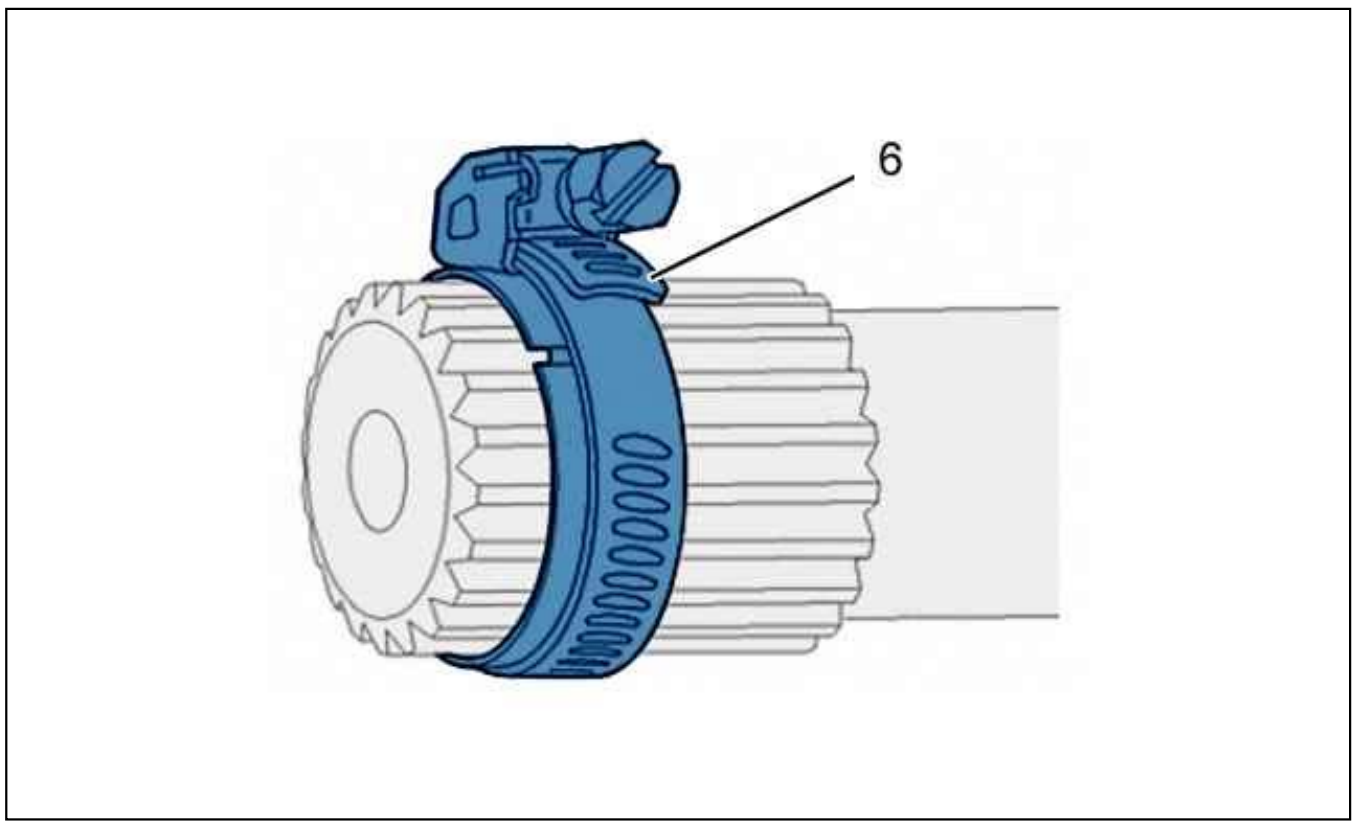

Figure : B2FH005D

Fit a clip (6) on the stop ring to facilitate force-fitting of the housing (3).

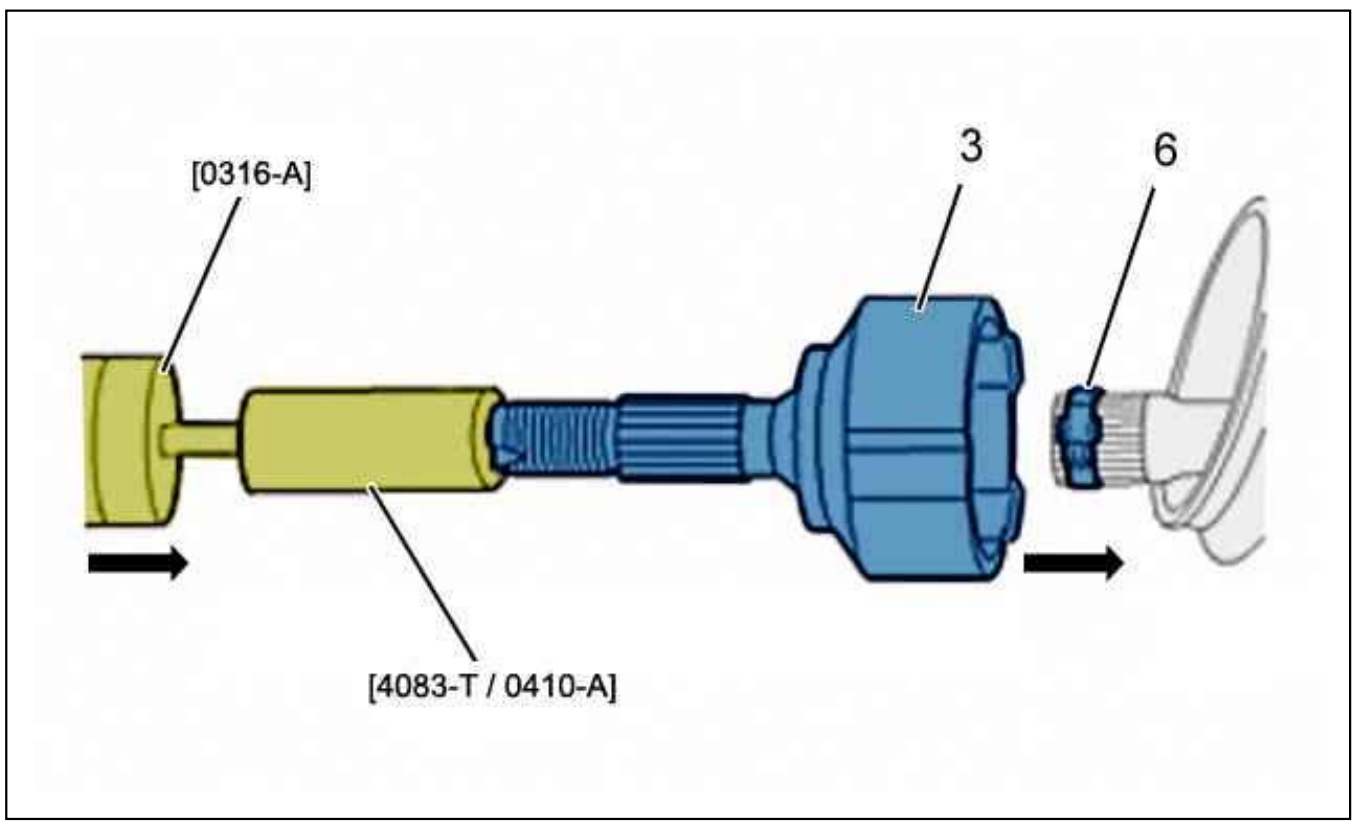

Figure : B2FH02RD

Refit the housing (3) to the shaft ; Using the tools [0316-A], [4083-T / 0410-A].
Remove the collar (6).
Fill the gaiter with all the grease available in the repair kit.
Refit the gaiter (5) on the housing (3).

CAUTION : Pay attention to the location of the gaiter on the shaft: gaiter lip in the groove "a" or on the mark made when removing.

Refit and tighten the clips (1) and (2) .

4.2. Driveshaft GKN

N.B. : The driveshaft bowl on the wheel side cannot be removed ; The replacing of a wheel-end driveshaft gaiter necessitates the removal of the gearbox-end gaiter.

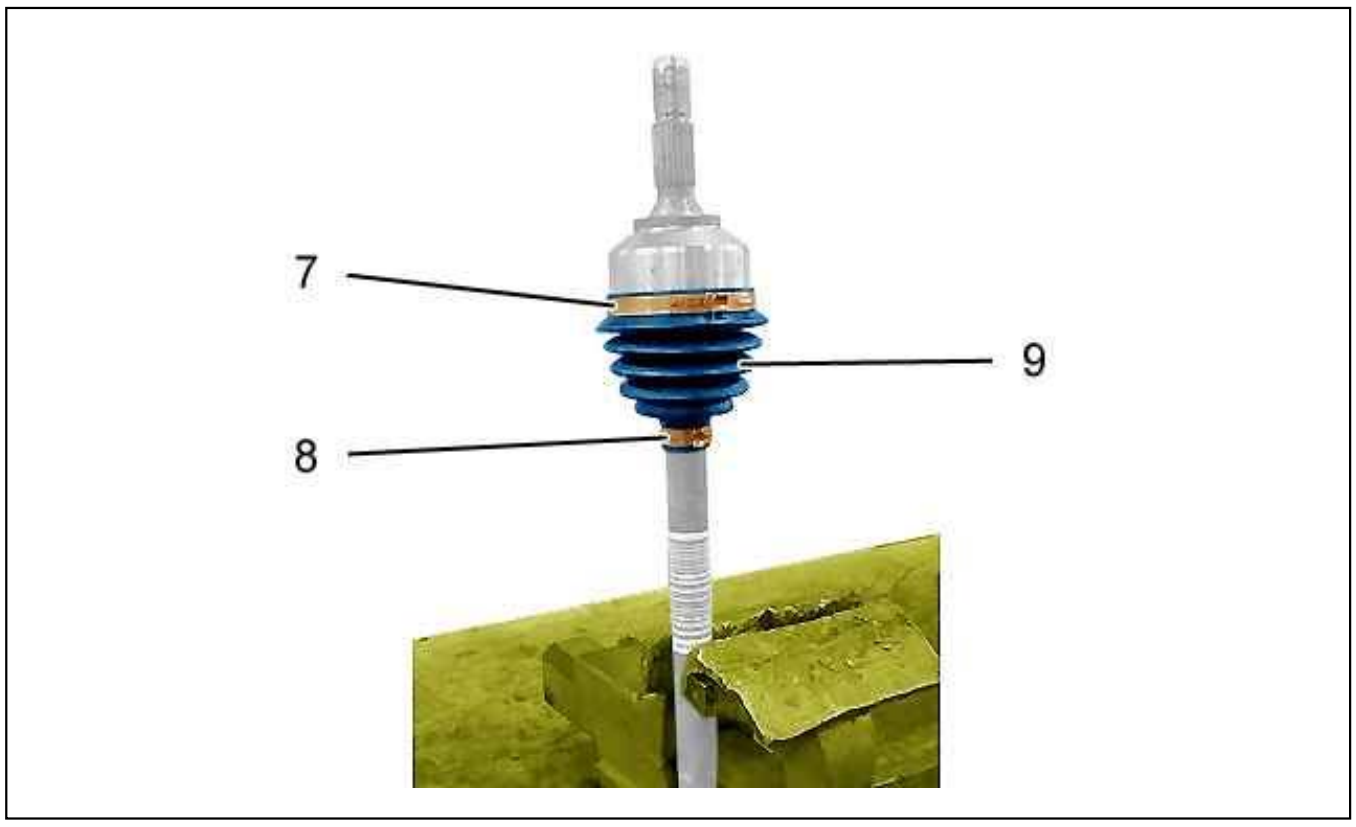

Figure : B2FH00QD

Remove :

- The drive shaft gaiter (on the gearbox side)
- The clips (7), (8)
- The drive shaft gaiter (9)

Refit the driveshaft gaiter (9) on the driveshaft.
Fill the gaiter with all the grease available in the repair kit.
Refit :

- The collars (7) and (8)
- The drive shaft gaiter (on the gearbox side)

5. Replacement : Gearbox end gaiter

CAUTION : Always replace the clips and circlips that have been removed.

5.1. GKN and NTN driveshafts

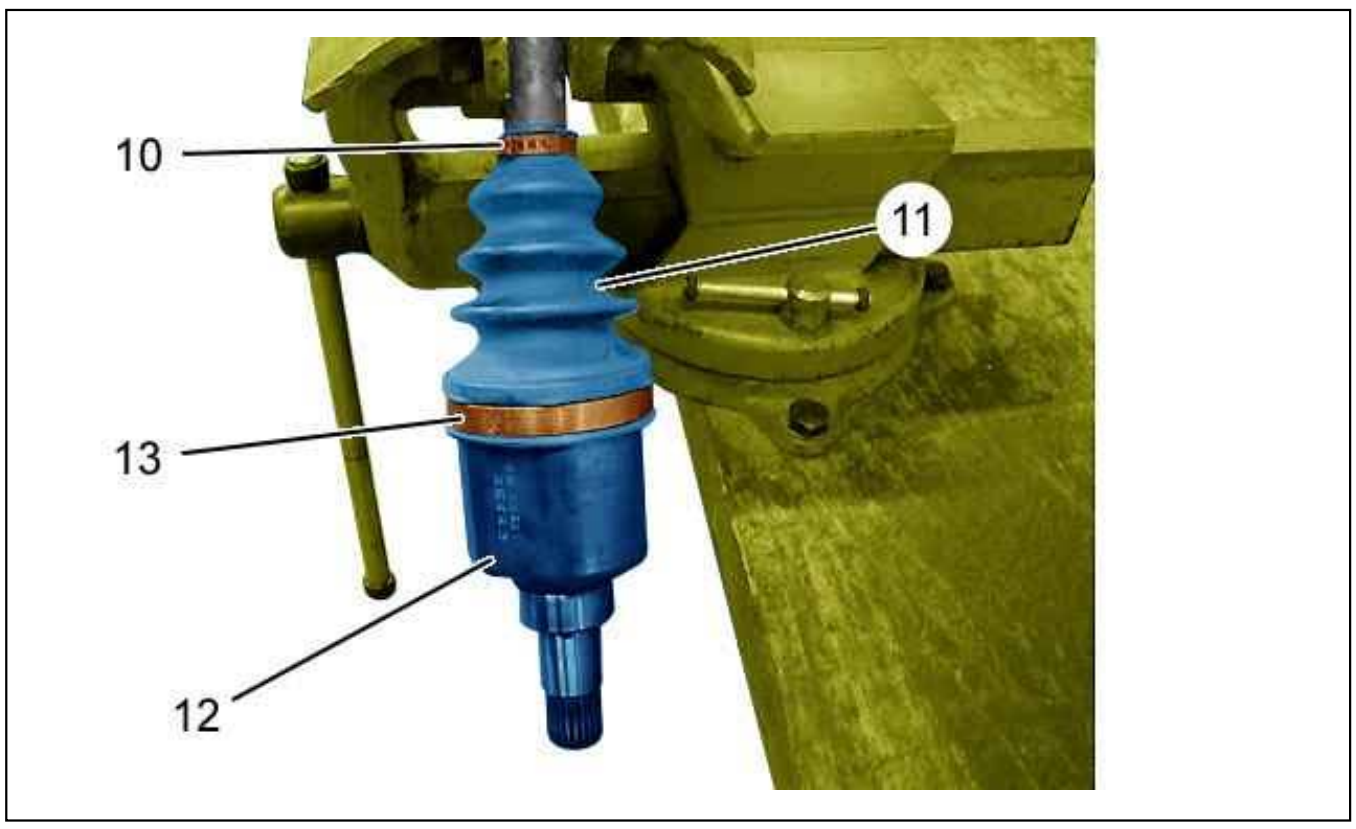

Figure : B2FH011D

Remove the clips (10), (13).
Move aside the driveshaft gaiter (11).
Remove vertically the spider ecu(12).
Remove as much grease as possible from inside the gaiter .

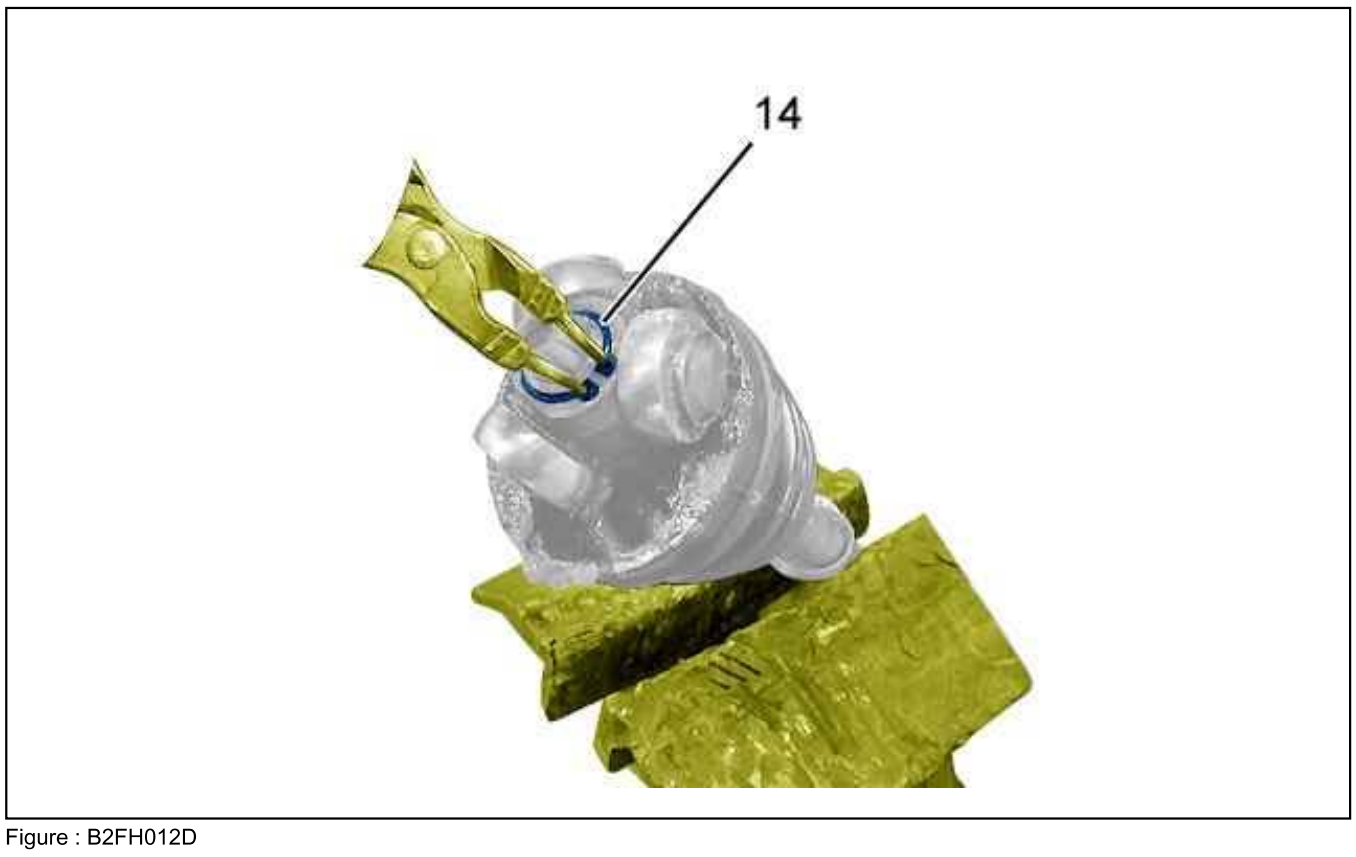

Figure : B2FH012D

Remove the excess grease from the gaiter and on the tripod.
Remove circlip (14).

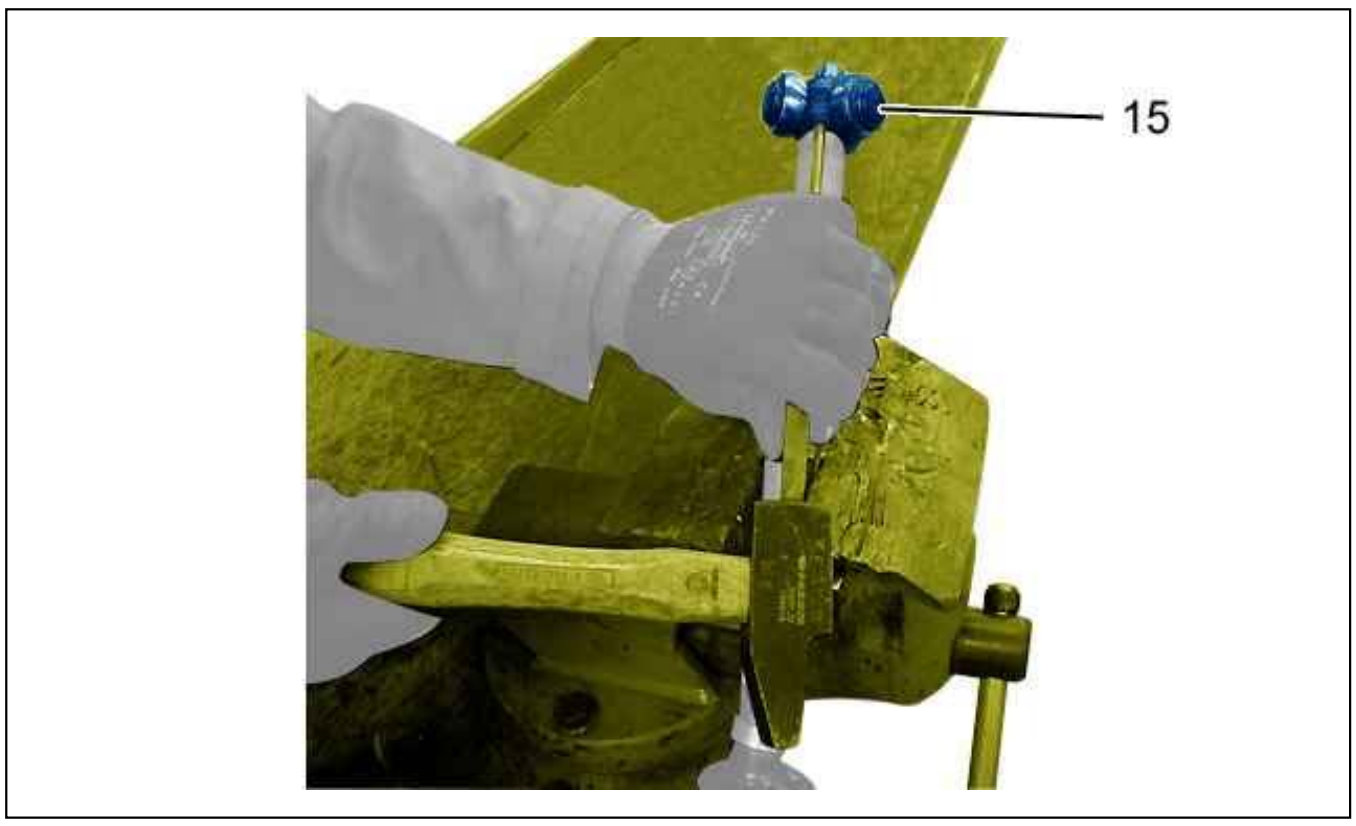

Figure : B2FH013D

Remove the tripod (15) ; Using a hammer and a pin punch.
Remove the driveshaft gaiter (11).
Refit the driveshaft gaiter (11) on the driveshaft (new).
Refit :

- The tripod (15)
- The circlip (14)

Fill the gaiter with all the grease available in the repair kit.
Refit :

- The tripod housing (12)
- The collars (10) and (13)

5.2. Driveshaft PSA

N.B. : At the gearbox end, as the spider cannot be removed, replacement of the gaiter is only possible following removal of the seal at the wheel end.

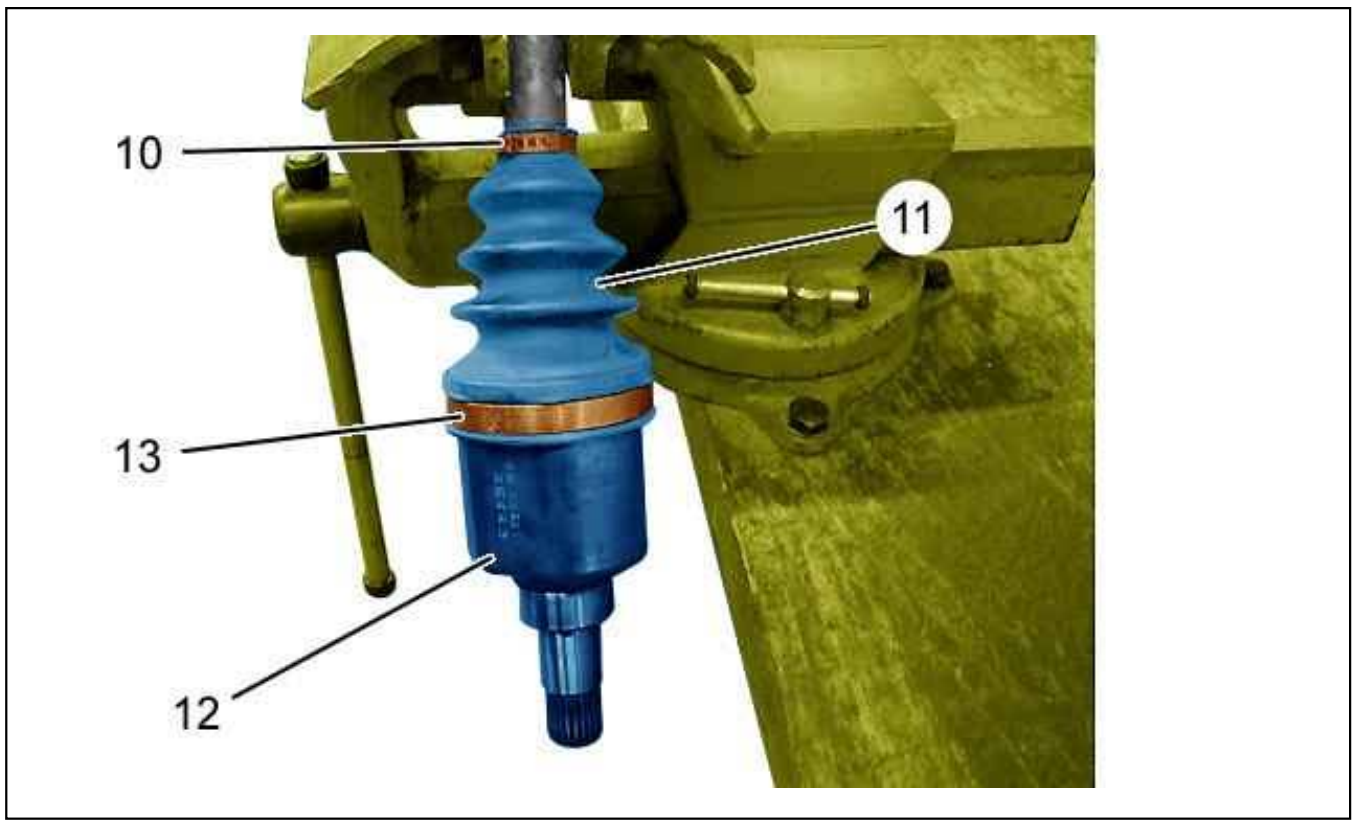

Figure : B2FH011D

Remove :

- The drive shaft gaiter (/) (road wheel side)
- The clips (10), (13)
- The tripod housing (12)
- The drive shaft gaiter (11)

Take as much grease as possible off the driveshaft seal ; Do not use solvents.
Fit the new gaiter (11) on the drive shaft.
Spread the grease between the gaiter and the tripod.
Refit :

- The tripod housing (12)
- The clips (10), (13)
- The drive shaft gaiter (road wheel side)

6. Clips

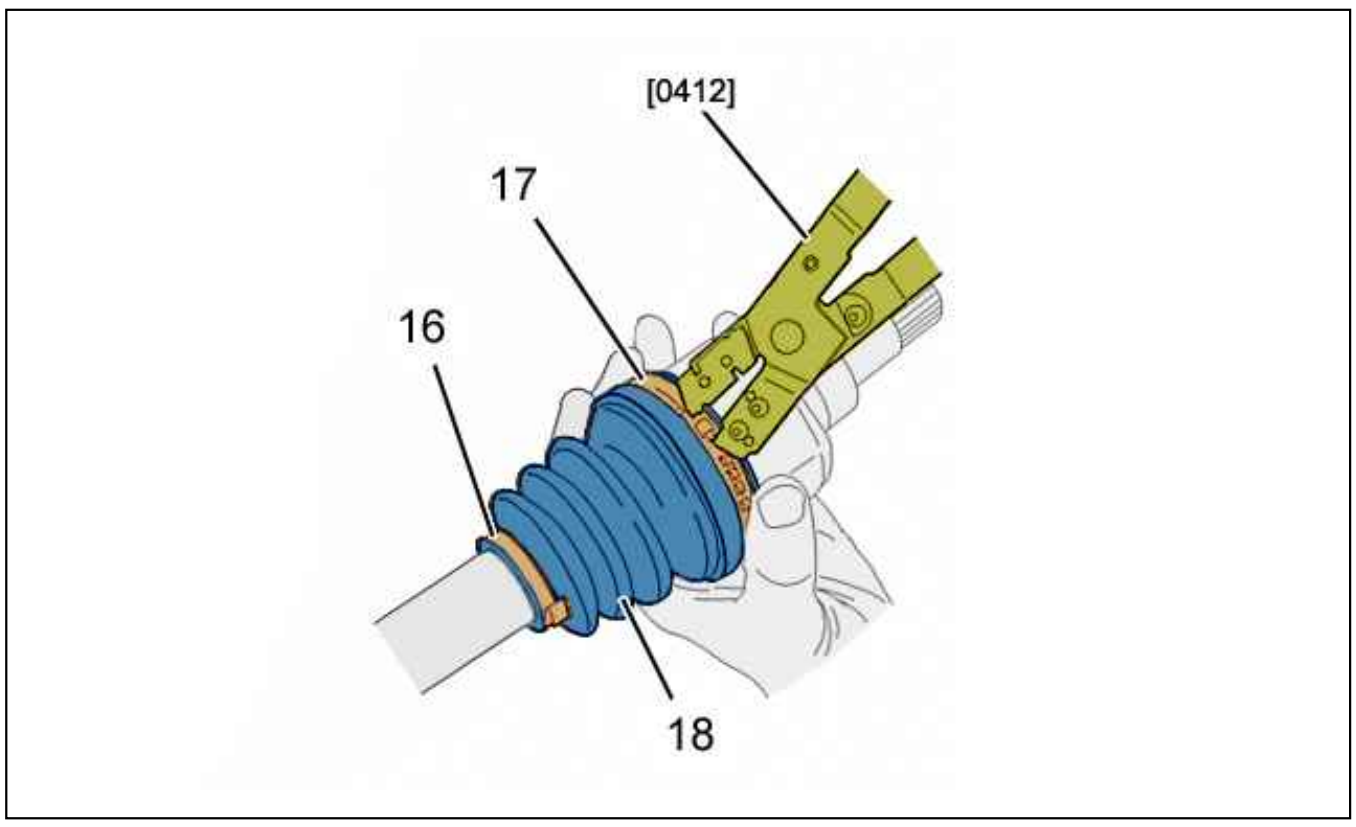

Figure : B2FH015D

Position the driveshaft gaiter (18) (Observe the marks made during the dismantling operation).
Refit the new clips (16) and (17) ; Using the special tool (According to the clips) :

- CLIC clips ; Using tool [0409]
- OETIKER clips ; Using tool [0412]

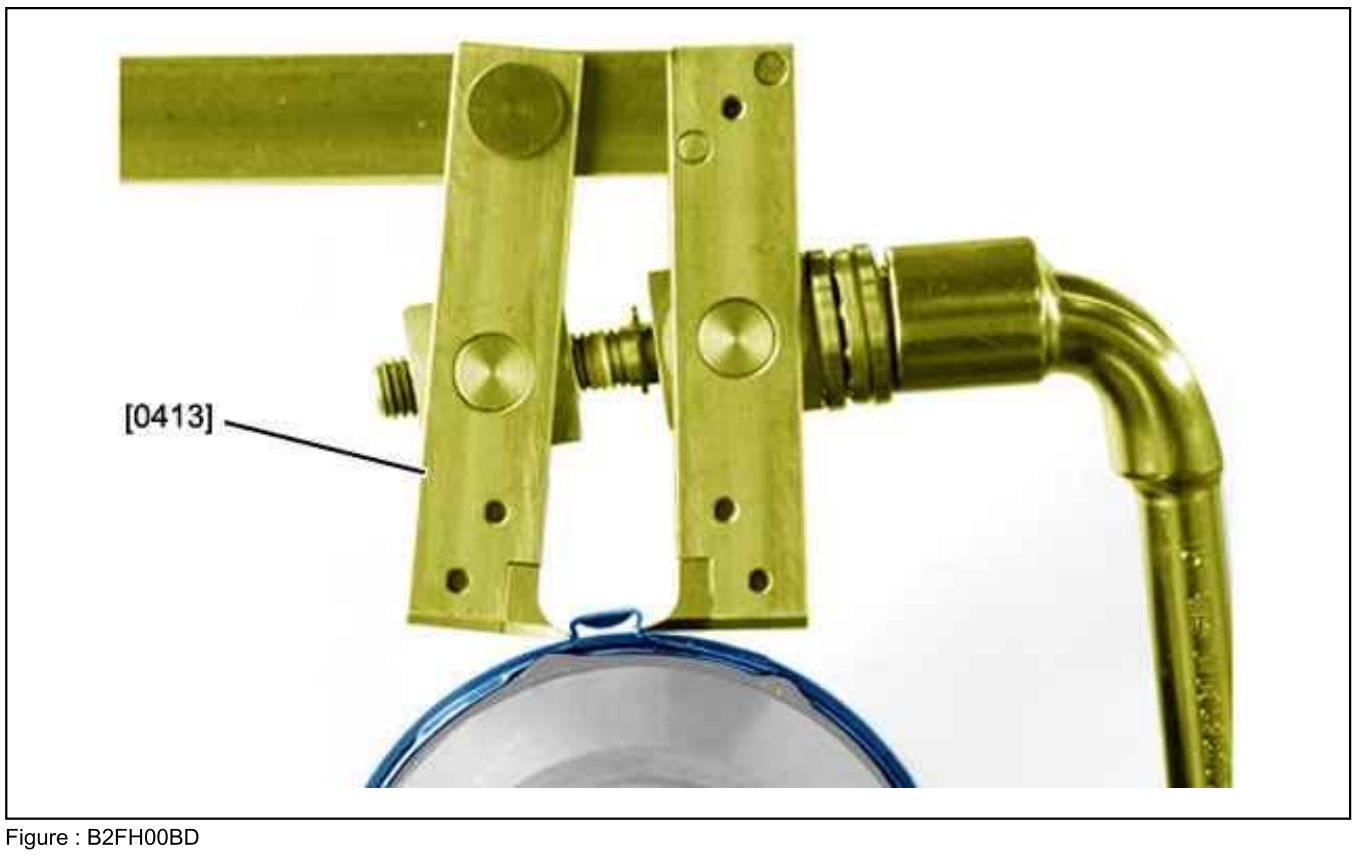

Figure : B2FH00BD

Tighten the wing clips ; Using the tools [0413] or [0409].

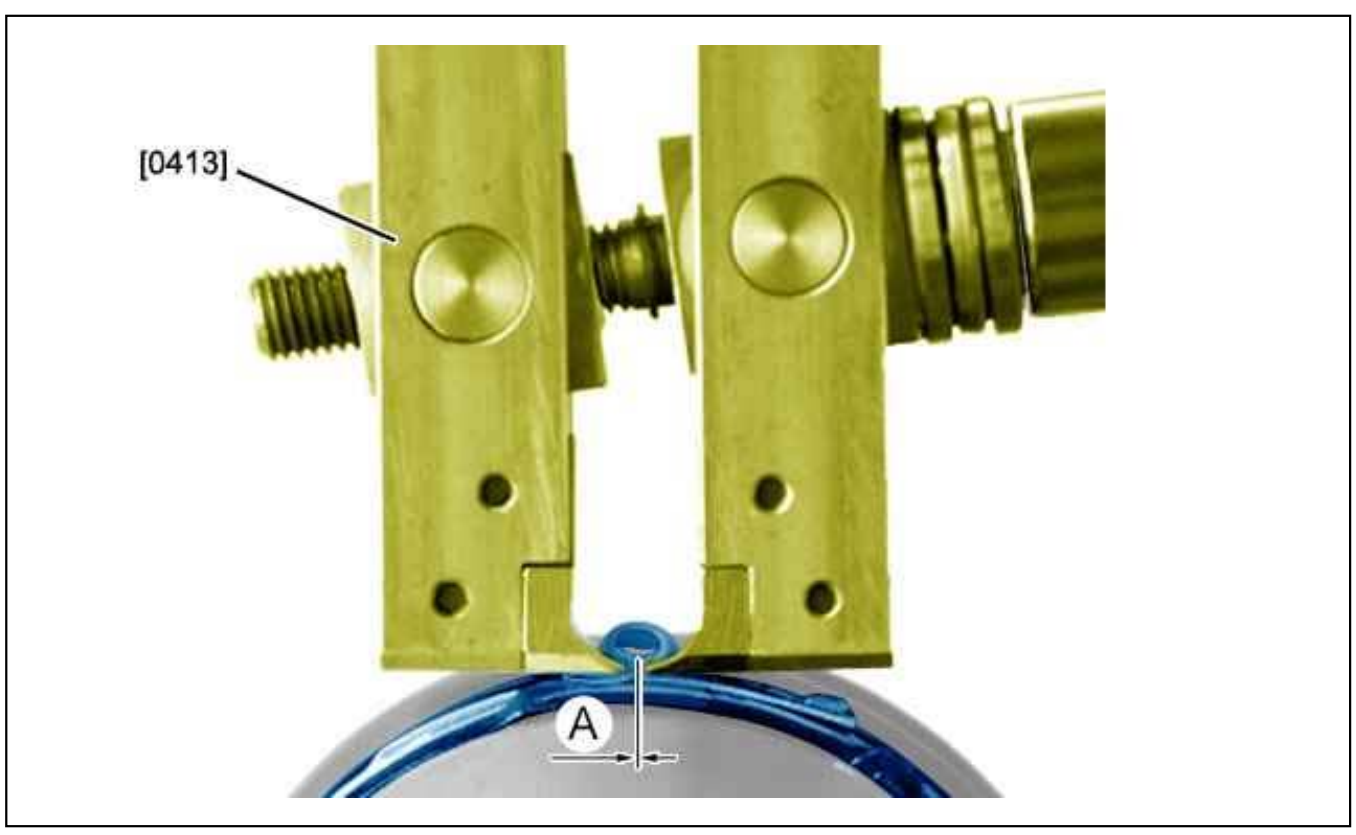

Figure : B2FH00CD

Tighten the clips : Until there is contact "A" = 0 mm.

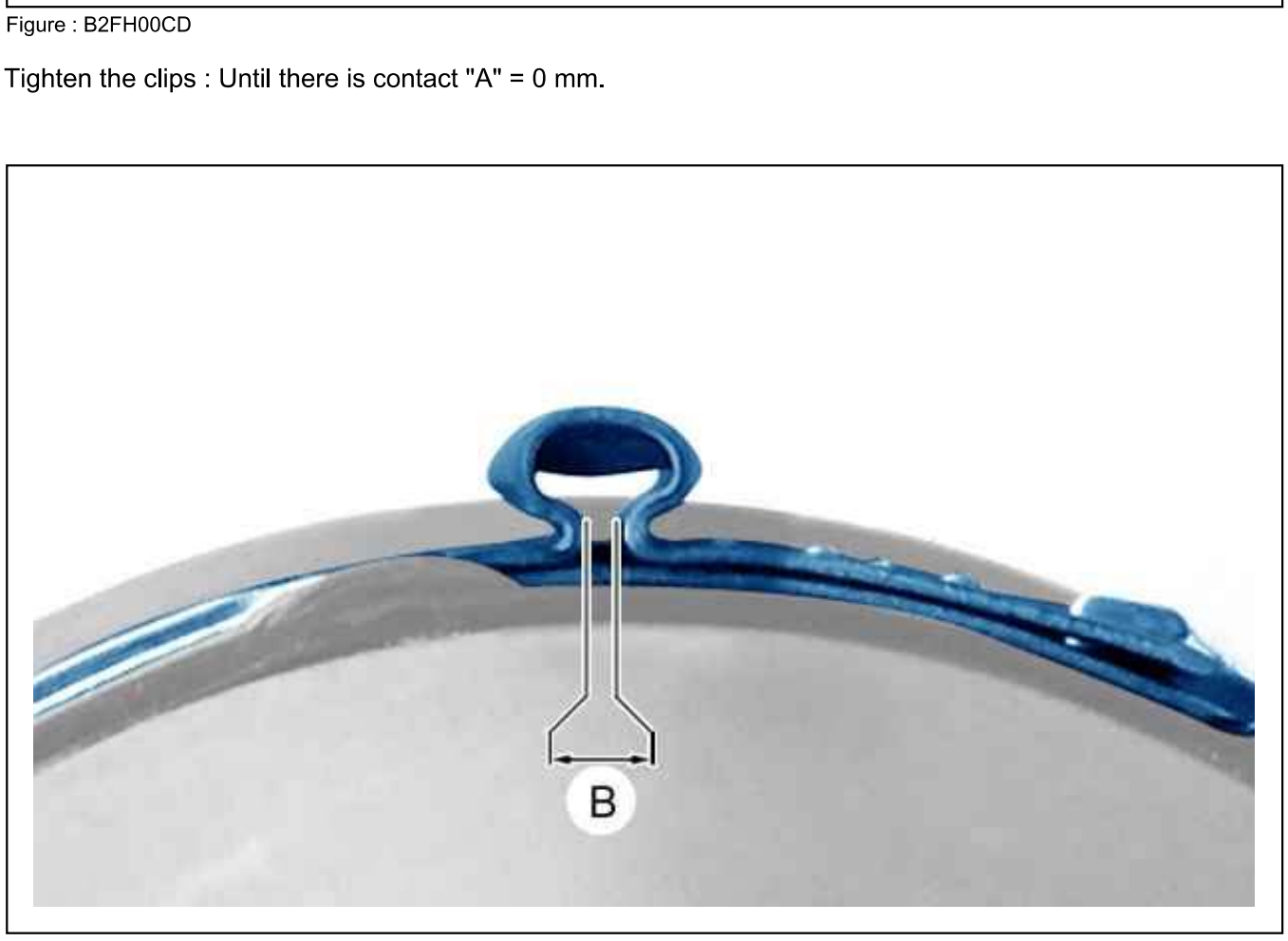

Figure : B2FH00DD

After tightening : Check the space "B" = 0,5 to 1 mm.

7. Additional operation

Refit the drive shafts.

TIGHTENING TORQUES : ROAD WHEELS

1. recommendations

CAUTION : The use of impact wrenches to refit the wheel bolts and wheel anti-theft bolts is strictly prohibited.

CAUTION : The wheels are always tightened with dry bolts.

CAUTION : When installing a new steel wheel for the first time, Always double tighten the wheel, to avoid any risk of slackening.

N.B. : Double tightening consists of tightening to the specified torque followed by slackening then retightening to the specified torque.

Ensure that the anti-theft wrench is positioned correctly on refitting.

CAUTION : Tighten the wheel bolts using a torque wrench.

2. Tightening torques : road wheels

vehicles	Steel rims	aluminium rims
C-Zero	10 daNm	10 daNm
AX	9 daNm	10 daNm
SAXO	9 daNm	10 daNm
C1	10 daNm	10 daNm
C2	9 daNm	10 daNm
C2 China	9 daNm	10 daNm
C3	9 daNm	10 daNm
C3 Pluriel	9 daNm	10 daNm
C3 (A51)	10 daNm	10 daNm
DS3	10 daNm	10 daNm
C3 Picasso	10 daNm	10 daNm
C3 Aircross	10 daNm	10 daNm
ZX	9 daNm	10 daNm
XSARA	9 daNm	10 daNm
XSARA PICASSO	9 daNm	10 daNm
C4	10 daNm	10 daNm
C-Quatre (China)	10 daNm	10 daNm
C4 PICASSO	10 daNm	10 daNm
C4 PICASSO (B78)	10 daNm	10 daNm
DS4	10 daNm	10 daNm
C4 L (B73 China)	10 daNm	10 daNm
C4 (B73 Russia)	10 daNm	10 daNm
C4 (B73 Mercosur)	10 daNm	10 daNm
BX	9 daNm	10 daNm
XANTIA	9 daNm	10 daNm
DS5	10 daNm	10 daNm
DS5 (China)	10 daNm	10 daNm
CITROEN C5 (X3 X4)	9 daNm	10 daNm
CITROEN C5 (X7) (XW)	10 daNm	10 daNm
SYNERGIE	9 daNm	10 daNm
XM	9 daNm	10 daNm
C6	-	10 daNm
C8	10 daNm	10 daNm
C-Crosser	10 daNm	10 daNm
C4 Aircross	10 daNm	10 daNm
C-Elysée	10 daNm	10 daNm
C-Elysée (China)	10 daNm	10 daNm
C15	9 daNm	-
C25	9 daNm	-
NEMO	9 daNm	10 daNm
BERLINGO (M49, M59)	9 daNm	9 daNm
BERLINGO (B9)	10 daNm	10 daNm
DISPATCH	10 daNm	9 daNm
RELAY (15 inch wheels)	16 daNm	16 daNm
RELAY (16 inch wheels)	18 daNm	18 daNm

3. Wheel valve

3.1. Vehicles not equipped with tyre under-inflation detection system

Always replace the wheel valves when changing the tyres.

CAUTION : Vehicles DS3 Racing ; Tighten the wheel valves to 0,4 daNm.

3.2. Vehicles fitted with a tyre under-inflation detection system

Observe the tightening torque of the wheel valve nuts : Tighten to 0,8 daN.m.

TIGHTENING TORQUES : ROAD WHEELS (TECHNICAL NOTE)

1. recommendations

CAUTION : The use of impact wrenches to refit the wheel bolts and wheel anti-theft bolts is strictly prohibited.

CAUTION : The wheels are always tightened with dry bolts.

CAUTION : When installing a new steel wheel for the first time, Always double tighten the wheel, to avoid any risk of slackening.

N.B. : Double tightening consists of tightening to the specified torque followed by slackening then retightening to the specified torque.

Ensure that the anti-theft wrench is positioned correctly on refitting.

CAUTION : Tighten the wheel bolts using a torque wrench.

2. Tightening torques: road wheels

vehicles	Steel rims	aluminium rims
C-Zero	10 daNm	10 daNm
AX	9 daNm	10 daNm
SAXO	9 daNm	10 daNm
C1	10 daNm	10 daNm
C2	9 daNm	10 daNm
C3	9 daNm	10 daNm
C3 Pluriel	9 daNm	10 daNm
C3 (A51)	10 daNm	10 daNm
DS3	10 daNm	10 daNm
C3 Picasso	10 daNm	10 daNm
C3 Aircross	10 daNm	10 daNm
ZX	9 daNm	10 daNm
XSARA	9 daNm	10 daNm
XSARA PICASSO	9 daNm	10 daNm
C4	10 daNm	10 daNm
C4 PICASSO	10 daNm	10 daNm
C4 PICASSO (B78)	10 daNm	10 daNm
DS4	10 daNm	10 daNm
C4 (B73 Russia)	10 daNm	10 daNm
BX	9 daNm	10 daNm
XANTIA	9 daNm	10 daNm
DS5	10 daNm	10 daNm
CITROEN C5 (X3 X4)	9 daNm	10 daNm
CITROEN C5 (X7)	10 daNm	10 daNm
SYNERGIE	9 daNm	10 daNm
XM	9 daNm	10 daNm
C6	-	10 daNm
C8	10 daNm	10 daNm
C-Crosser	10 daNm	10 daNm
C4 Aircross	10 daNm	10 daNm
C-Elysée	10 daNm	10 daNm
C15	9 daNm	-
C25	9 daNm	-
NEMO	9 daNm	10 daNm
BERLINGO (M49, M59)	9 daNm	9 daNm
BERLINGO (B9)	10 daNm	10 daNm
DISPATCH	10 daNm	9 daNm
RELAY (15 inch wheels)	16 daNm	16 daNm
RELAY (16 inch wheels)	18 daNm	18 daNm

3. Wheel valve

3.1. Vehicles not equipped with tyre under-inflation detection system

Always replace the wheel valves when changing the tyres.

CAUTION : Vehicles DS3 Racing ; Tighten the wheel valves to 0,4 daNm.

3.2. Vehicles fitted with a tyre under-inflation detection system

Observe the tightening torque of the wheel valve nuts : Tighten to 0,8 daN.m.

REMOVING - REFITTING : PASSENGER AIRBAG (R.H.D.)

ESSENTIAL : Observe the safety and cleanliness recommendations .

ESSENTIAL : Apply the airbag safety procedures .

CAUTION : Apply the procedure for switching off the central airbag system .

CAUTION : Unlock and disconnect the connectors ; When connecting, ensure that the harnesses are correctly routed and clipped correctly.

CAUTION : The connectors must be disconnected without exerting any stress on the harnesses and the connectors (No pulling of the harnesses is permitted).

1. Removing

Disconnect the battery .
Remove the upper glovebox .

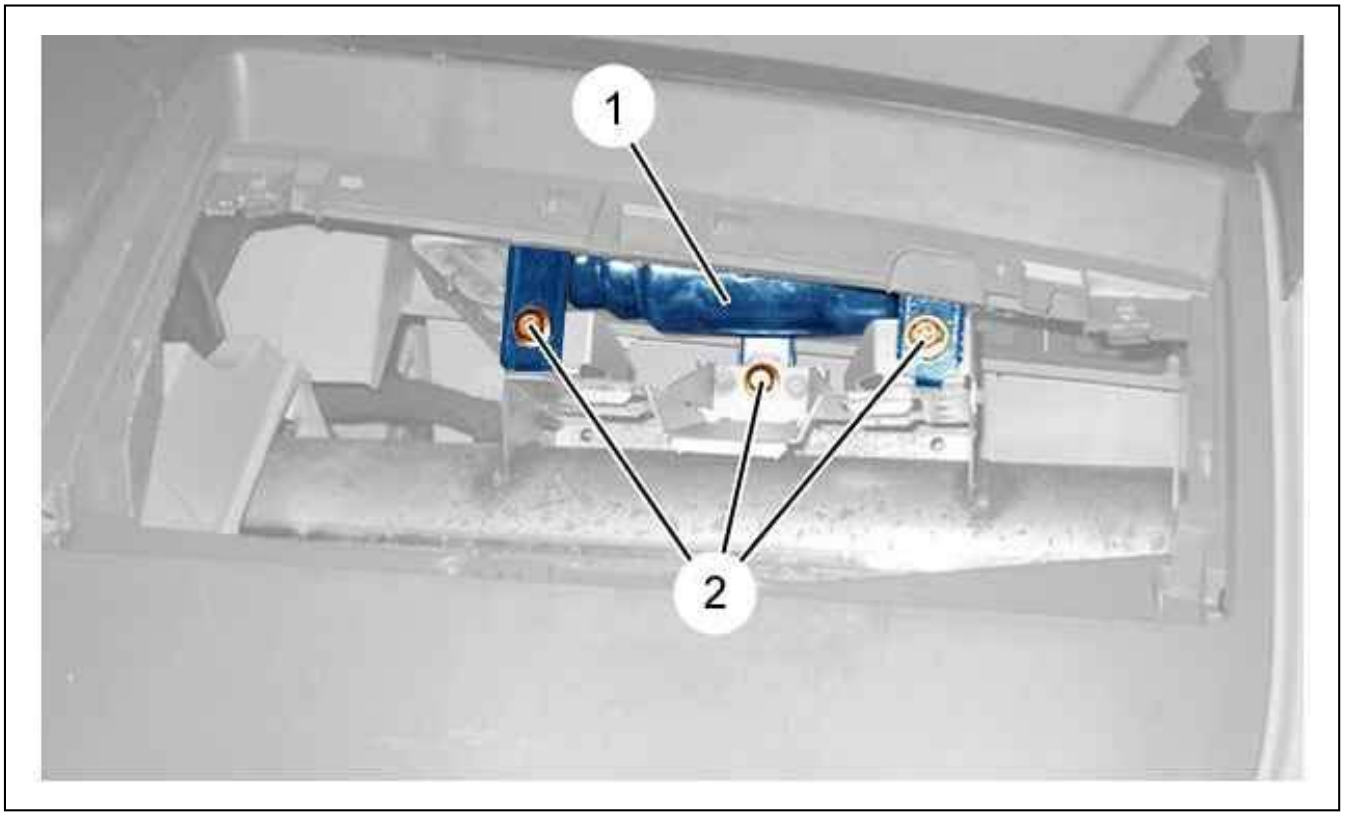

Figure : C5JG0XID

Remove the screws (2) of the passenger airbag (1).
Partially disengage the passenger airbag (1).



Figure : C5JG0XJD

Disconnect the connector of the passenger airbag (1) (at "a").
Remove the passenger's airbag (1).

ESSENTIAL : Apply the procedure for destruction of the pyrotechnic components .

ESSENTIAL : Apply the procedure for replacing the pyrotechnic components , after triggering the airbags and the seat belts .

2. Refitting

Proceed in the reverse order to removal.
Check all the equipment works.
Reconnect the battery.
Tighten the bolts (2) to 0,8 m.daN .

CAUTION : Apply the procedure for switching on the central airbag system .

ESSENTIAL : Re-initialisation procedure ; Using the diagnostic equipment.

REMOVING - REFITTING : DRIVER’S AIRBAG (RIGHT HAND DRIVE)

ESSENTIAL : Observe the safety and cleanliness recommendations .

ESSENTIAL : Apply the airbag safety procedures .

CAUTION : Apply the procedure for switching off the central airbag system .

CAUTION : Release and disconnect : The connectors ; When connecting, ensure that the harnesses are correctly routed and clipped correctly.

CAUTION : The connectors must be disconnected without exerting any stress on the harnesses and the connectors (No pulling of the harnesses is permitted).

1. Removing

Disconnect the battery .



Figure : C5JG0XLD

Engage a screwdriver in the holes at the bottom of the steering wheel and press on the spring in order to detach the airbag (1) (at "a").
Partially disengage the airbag (1).

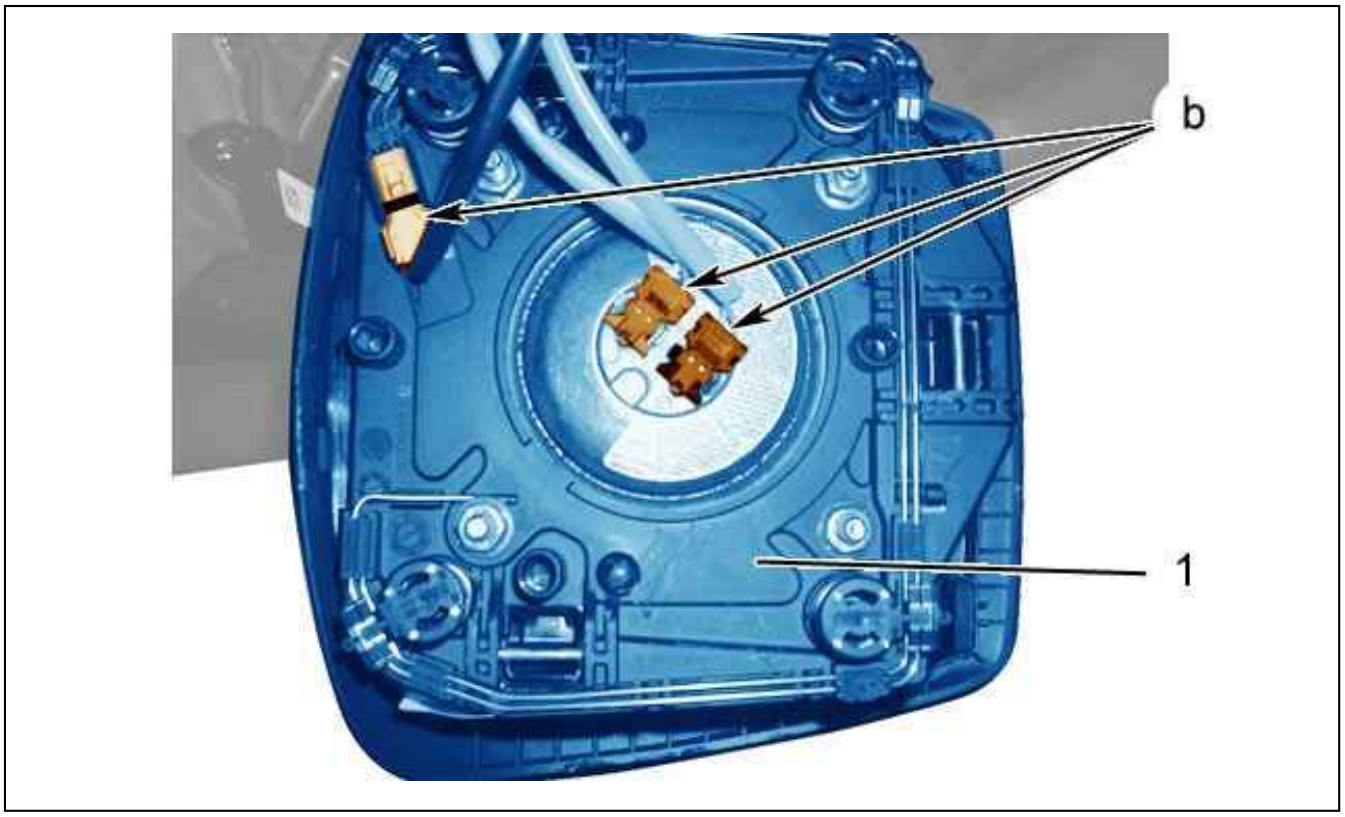

Figure : C5JP0D8D

ESSENTIAL : When removing an airbag, disconnect the supply connector first.

Disconnect the airbag connectors (1) (at "b").
Remove the airbag (1).

ESSENTIAL : Apply the procedure for destruction of the pyrotechnic components .

ESSENTIAL : Apply the procedure for replacing the pyrotechnic components , after triggering the airbags and the seat belts .

2. Refitting

ESSENTIAL : When refitting an airbag, connect the earth connector first.

Proceed in the reverse order to removal.

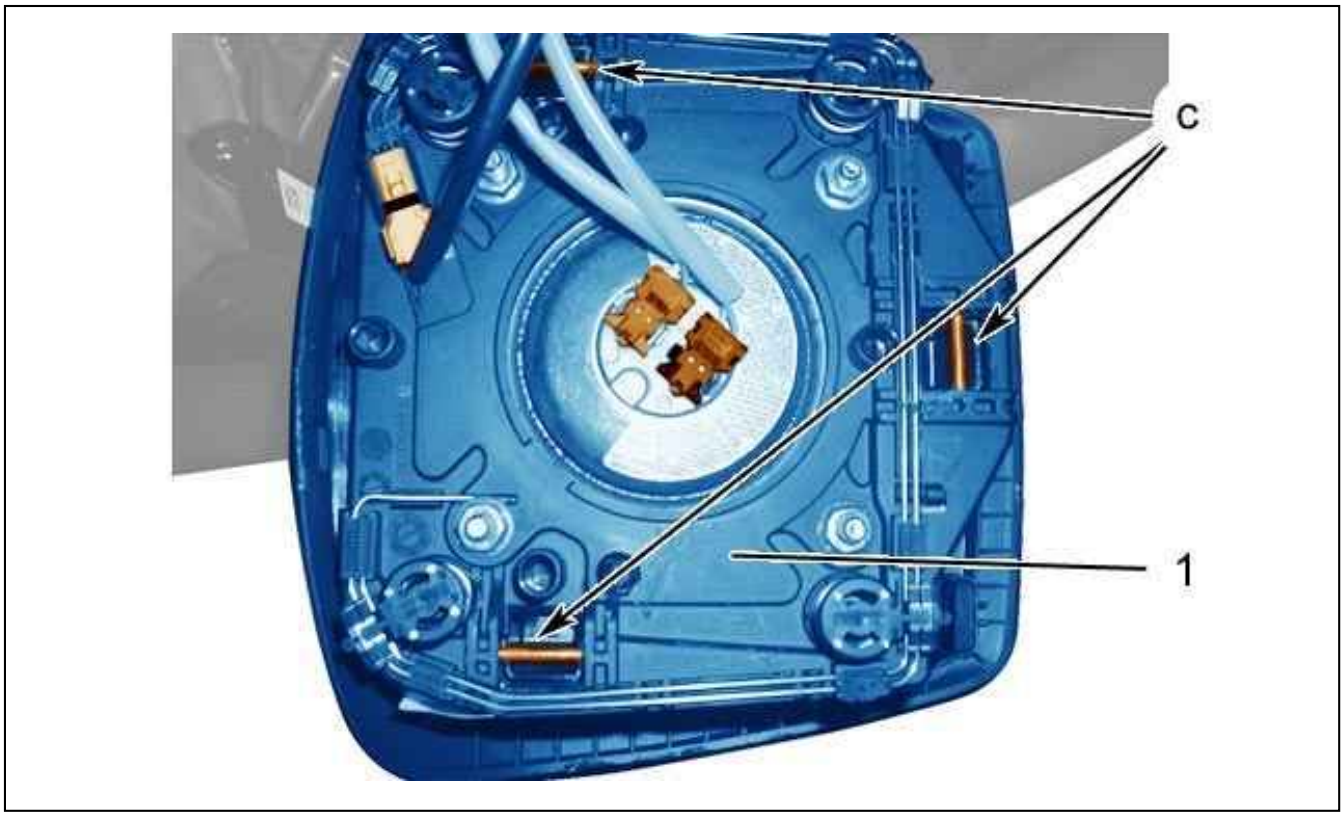

Figure : C5JP0D9D

Position the airbag (1) and press upwards to clip it in (at "c").
Check all the equipment works.
Reconnect the battery.

CAUTION : Apply the procedure for switching on the central airbag system .

ESSENTIAL : Re-initialisation procedure ; Using the diagnostic equipment.

REMOVING - REFITTING : DRIVER’S AIRBAG

1. Removing

ESSENTIAL : Before starting any operation, take care to comply with the safety requirements applying to airbags (see the relevant operation).

ESSENTIAL : Apply the procedure for switching off the central airbag system (see the relevant operation).



Figure : C5FP0YAD

Engage a screwdriver in the holes at the bottom of the steering wheel and press on the spring in order to detach the airbag (1) (at "a").
Partially disengage the airbag (1).

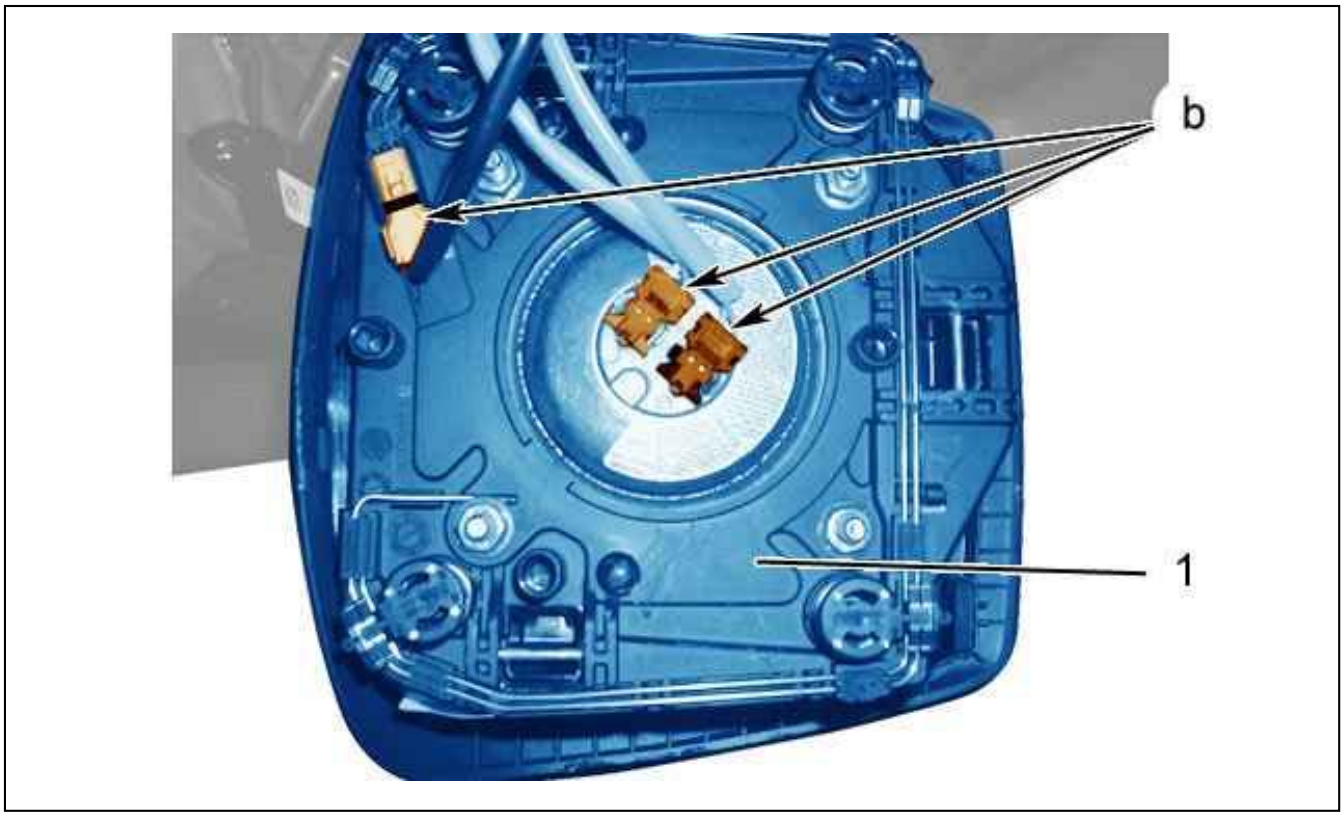

Figure : C5JP0D8D

Disconnect the airbag connectors (1) (at "b").
Remove the airbag (1).

ESSENTIAL : If replacing the airbag : Apply the procedure for destruction of the pyrotechnic components (see the relevant operation). Change the pyrotechnic components after triggering the airbags and the seat belt pretensioners (see the relevant operation).

2. Refitting

Proceed in the reverse order to removal.
Re-connect the connectors (/) (at "b").

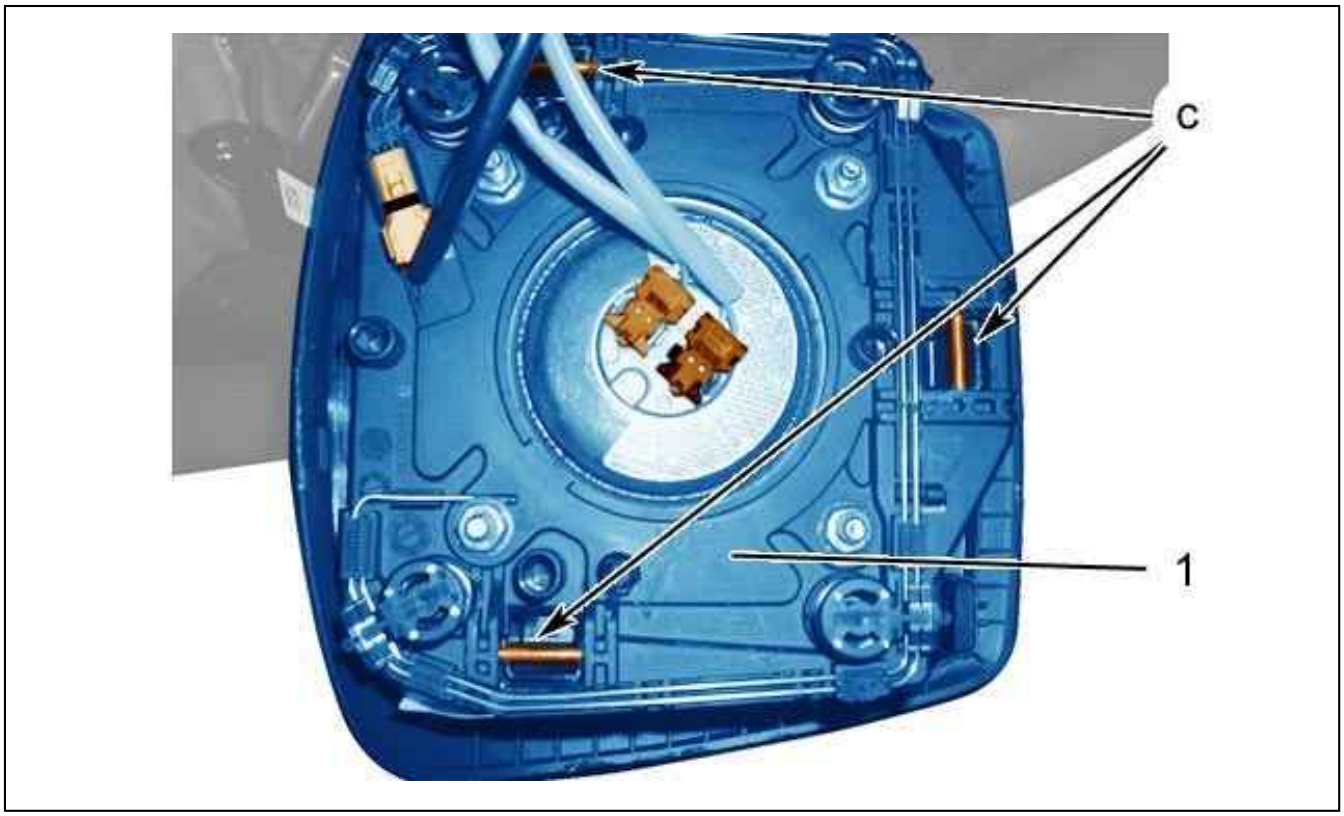

Figure : C5JP0D9D

Position the airbag (1) and press upwards to clip it in (at "c").
Check all the equipment works.

CAUTION : Apply the procedure for switching on the central airbag system (see the relevant operation).

ESSENTIAL : Re-initialisation procedure ; Using the diagnostic equipment.

REMOVING - REFITTING : PASSENGER AIRBAG

1. Removing

ESSENTIAL : Before starting any operation, take care to comply with the safety requirements applying to airbags (see the relevant operation).

ESSENTIAL : Apply the procedure for switching off the central airbag system (see the relevant operation).

Remove the upper glovebox (see the relevant operation).

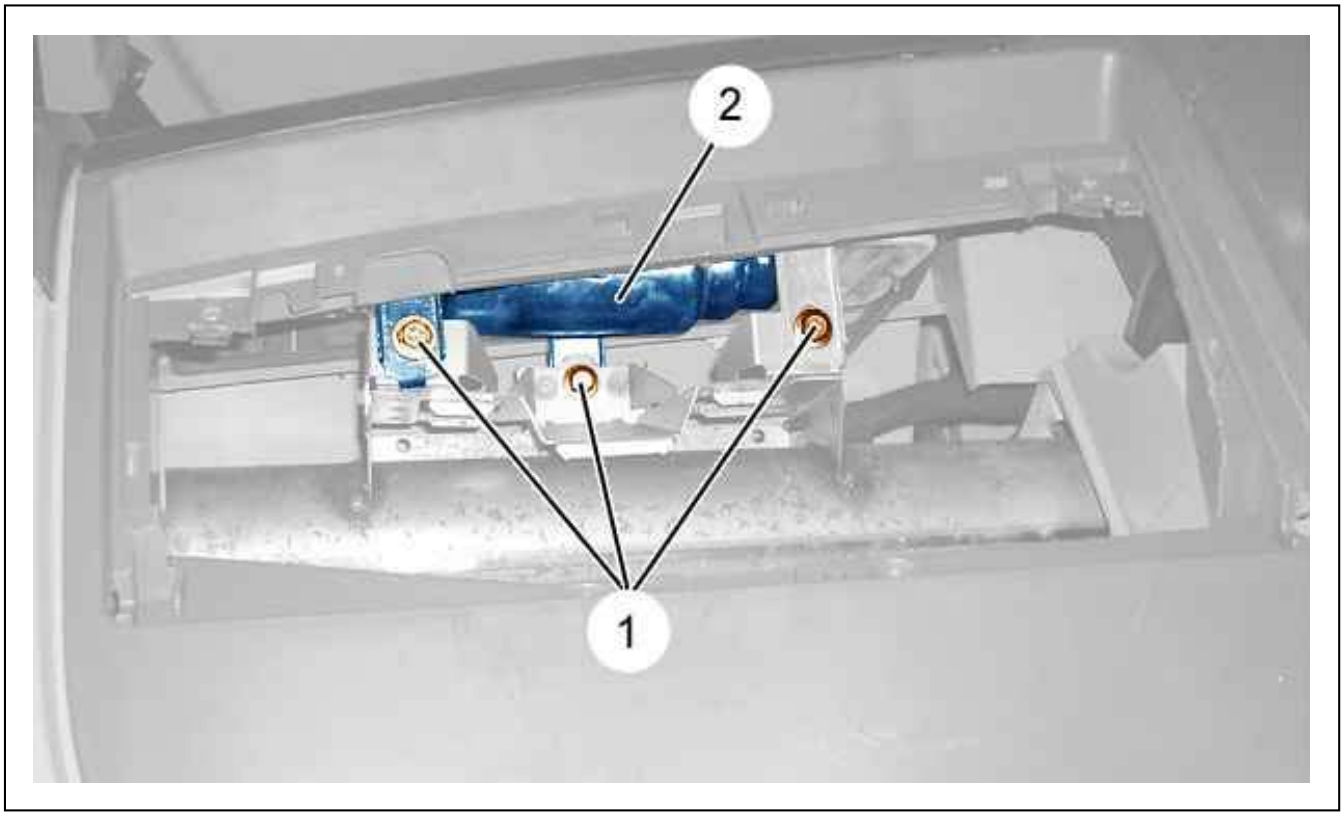

Figure : C5FP0YBD

Remove the screws (1) of the passenger airbag (2).
Partially disengage the passenger airbag (2).



Figure : C5JP0DAD

Disconnect the connector of the passenger airbag (2) (at "a").
Remove the passenger's airbag (2).

ESSENTIAL : If replacing the airbag : Apply the procedure for destruction of the pyrotechnic components (see the relevant operation). Change the pyrotechnic components after triggering the airbags and the seat belt pretensioners (see the relevant operation).

2. Refitting

Proceed in the reverse order to removal.
Check all the equipment works.
Tighten the bolts (1) to 0,8 m.daN .

CAUTION : Apply the procedure for switching on the central airbag system (see the relevant operation).

ESSENTIAL : Re-initialisation procedure ; Using the diagnostic equipment.

REMOVING - REFITTING : CENTRAL CONTROL UNIT

1. Preliminary operations

ESSENTIAL : Apply the procedure for switching off the central airbag system (see the relevant operation).

ESSENTIAL : Before starting any operation, take care to comply with the safety requirements applying to airbags (see the relevant operation).

Remove the lower trim from the central glovebox (see the relevant operation).

2. Removing

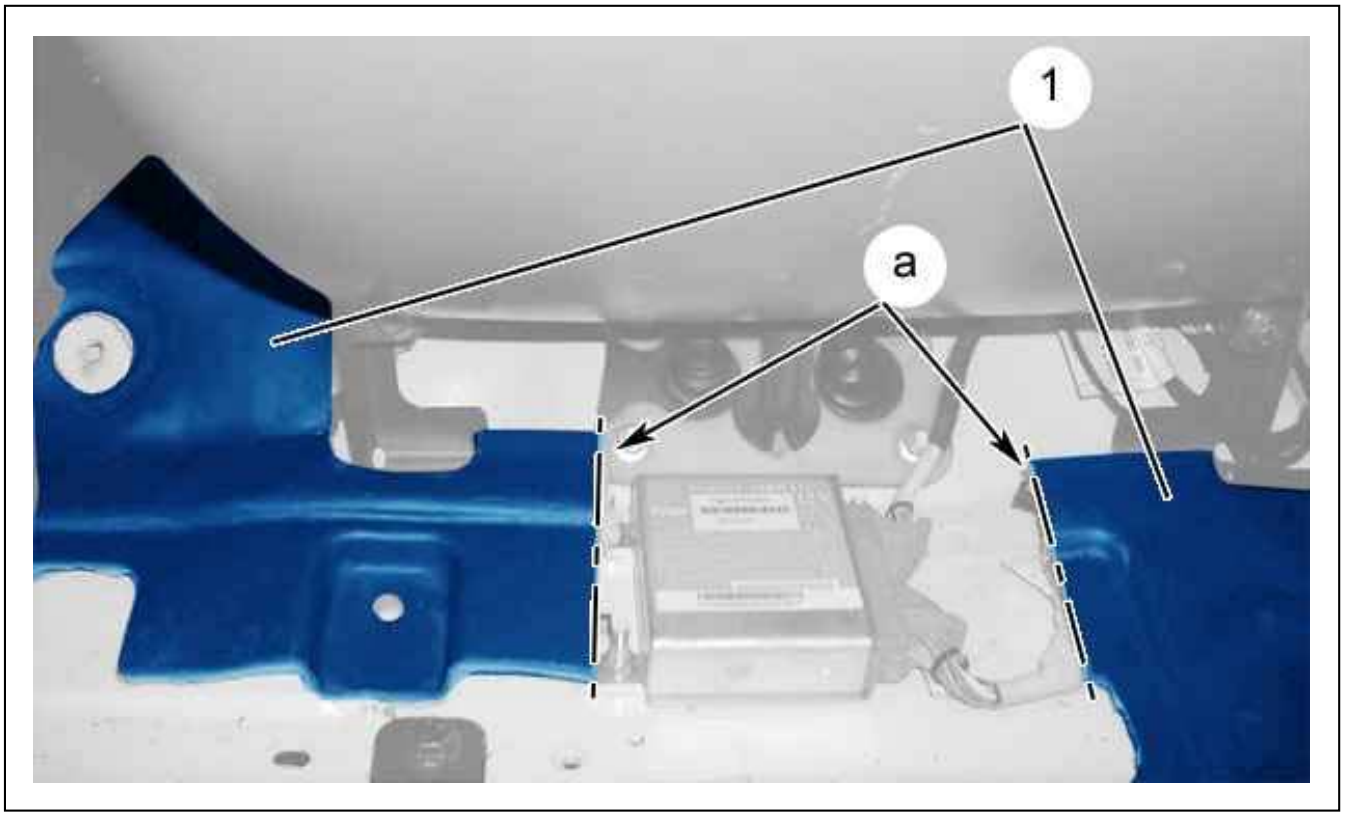

Figure : C5JP0DBD

Cut out the floor carpet (1) at " a " (using a trimming cutter).



Figure : C5JP0DCD

Disconnect the connectors "b".

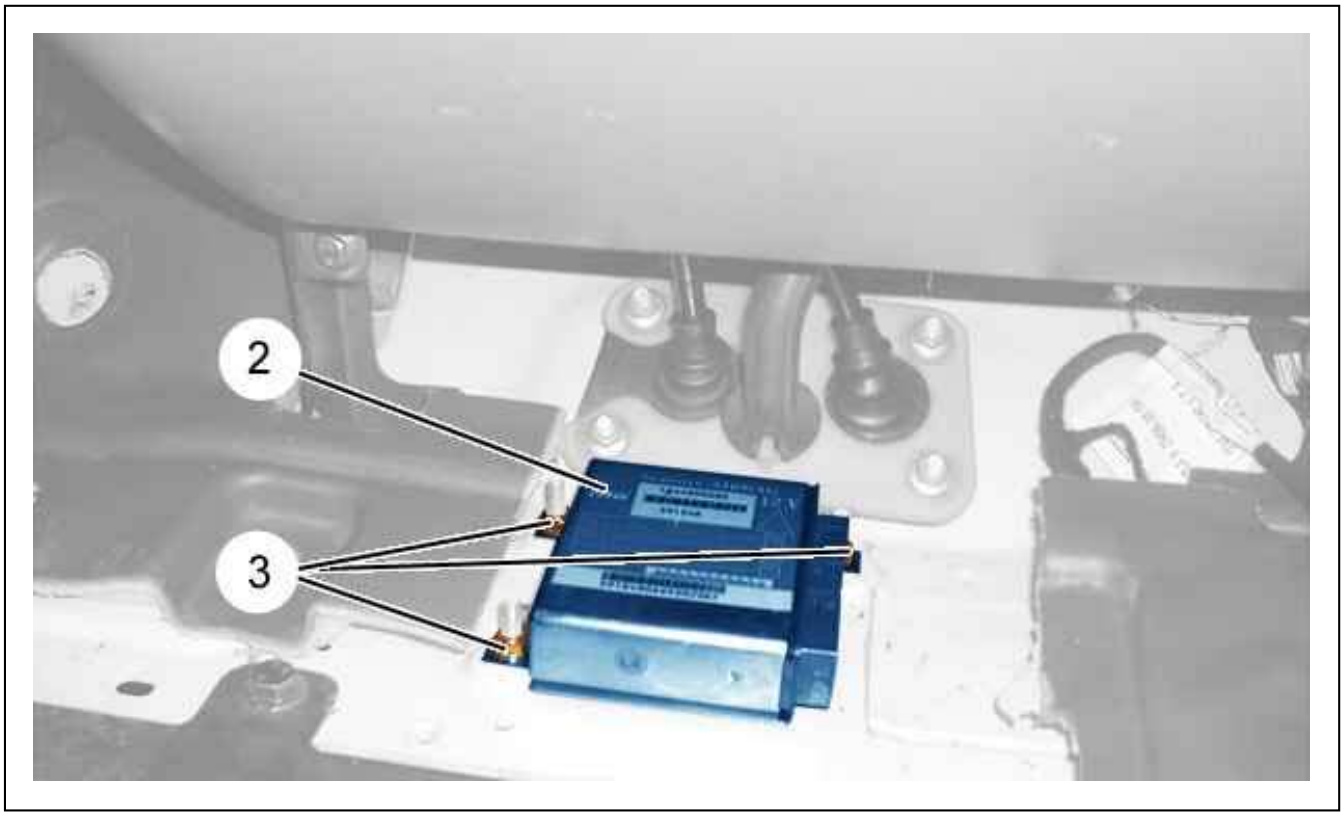

Figure : C5JP0DDD

Remove :

- The bolts (3)

- The central control unit (2)

ESSENTIAL : If replacing the airbag : Apply the procedure for destruction of the pyrotechnic components. (see corresponding procedure). Change the pyrotechnic components after triggering the airbags and the seat bell pretensioners. (see the relevant operation).

3. Refitting

Proceed in the reverse order to removal.
Tighten the bolts (3) to 0,8 ± 0,08 daN.m.

CAUTION : Apply the procedure for switching on the central airbag system (see the relevant operation).

ESSENTIAL : Re-initialise the equipment ; Using the diagnostic equipment.

REMOVING - REFITTING : ROOF LATERAL AIRBAG

ESSENTIAL : Observe the safety and cleanliness recommendations .

ESSENTIAL : Apply the pyrotechnic component safety instructions .

ESSENTIAL : Apply the procedure to deactivate the centralised airbag and seat belt system .

CAUTION : Release and disconnect : The connectors ; When connecting, ensure that the harnesses are correctly routed and clipped correctly.

CAUTION : The connectors must be disconnected without exerting any stress on the harnesses and the connectors (No pulling of the harnesses is permitted).

1. Removing

Disconnect the battery .

N.B. : Wait 10 minutes in the case of abnormal operation of the airbag warning lamp.

Remove the headlining .

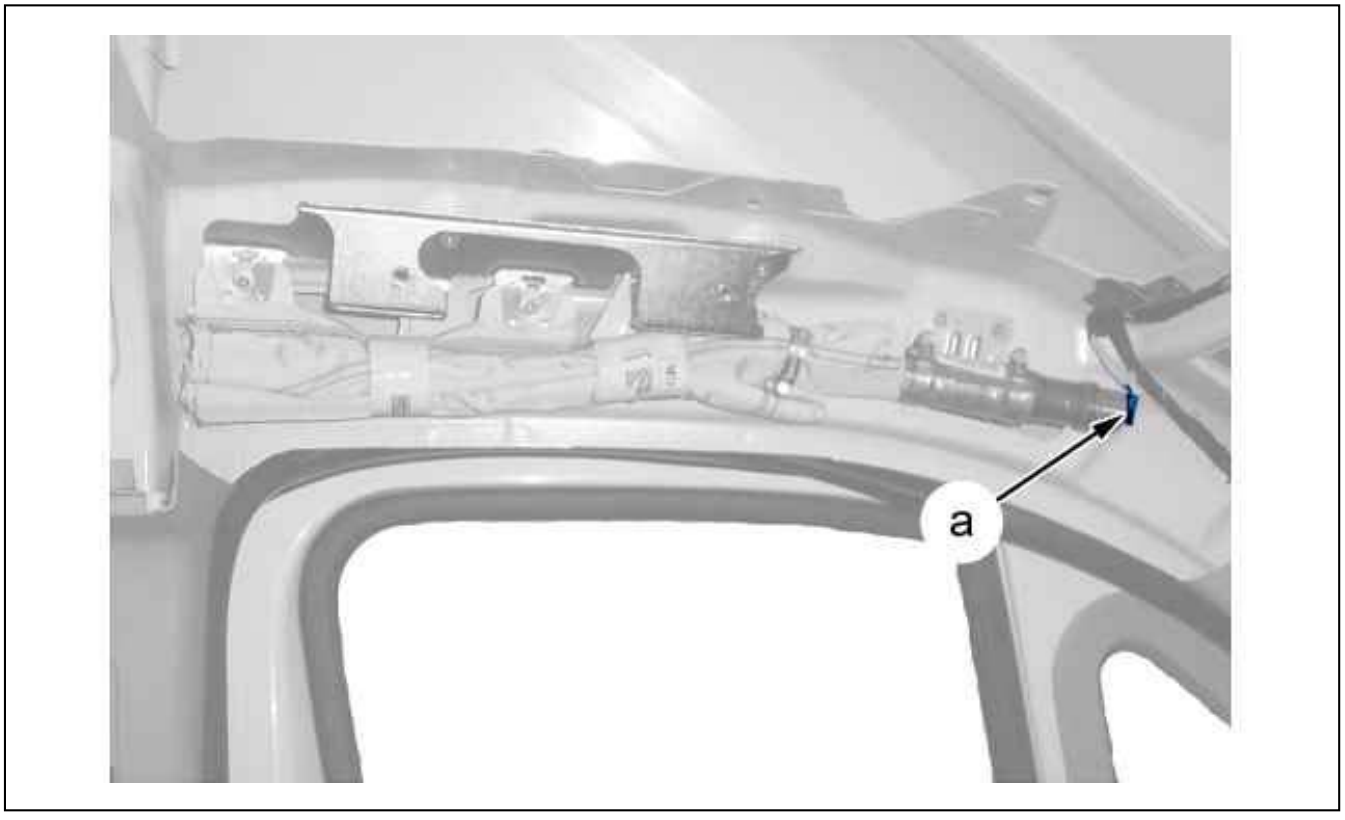

Figure : C5JM04DD

ESSENTIAL : When removing an airbag, disconnect the supply connector first.

Disconnect the connector (at "a").

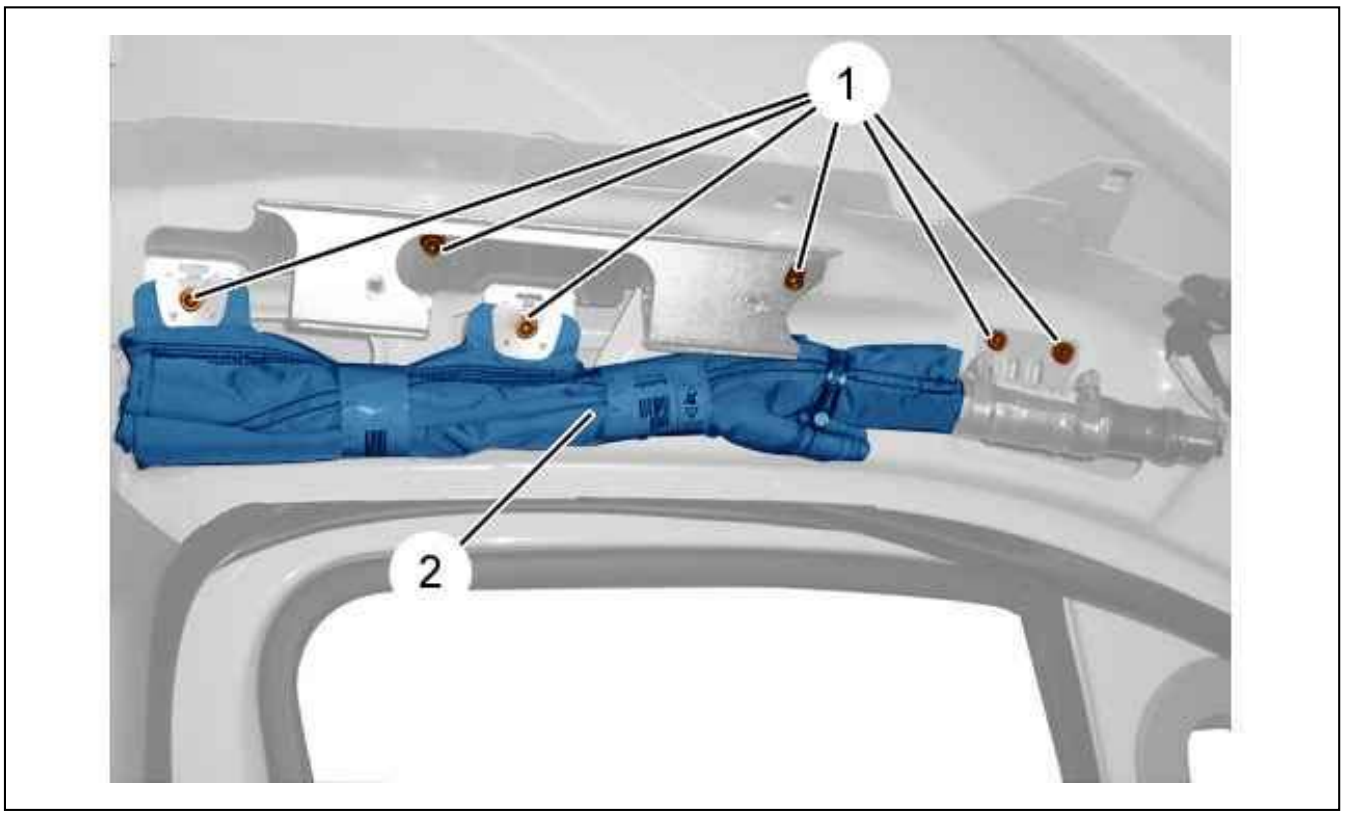

Figure : C5JM04ED

Remove :

- The bolts (1)
- The side air bag (2) (Roof panel)

ESSENTIAL : Apply the procedure for destruction of the pyrotechnic components .

ESSENTIAL : Apply the procedure for replacement of the pyrotechnic components following triggering of the air bags and seat belts .

2. Refitting

Proceed in the reverse order to removal.
Tighten the bolts (1) to 0,8 m.daN .

ESSENTIAL : Apply the procedure to deactivate the centralised airbag and seat belt system .

Reconnect the battery.
Check all the equipment works.

REMOVING - REFITTING : SIDE AIRBAG ACCELERATION SENSOR

ESSENTIAL : Observe the safety and cleanliness recommendations.

1. Removing

Perform the following operations :

- Switch off the ignition
- Wait 3 minutes before disconnecting the battery
- Disconnect the battery

1.1. On the driver's side

Remove : The B/C post trim (On the driver's side).

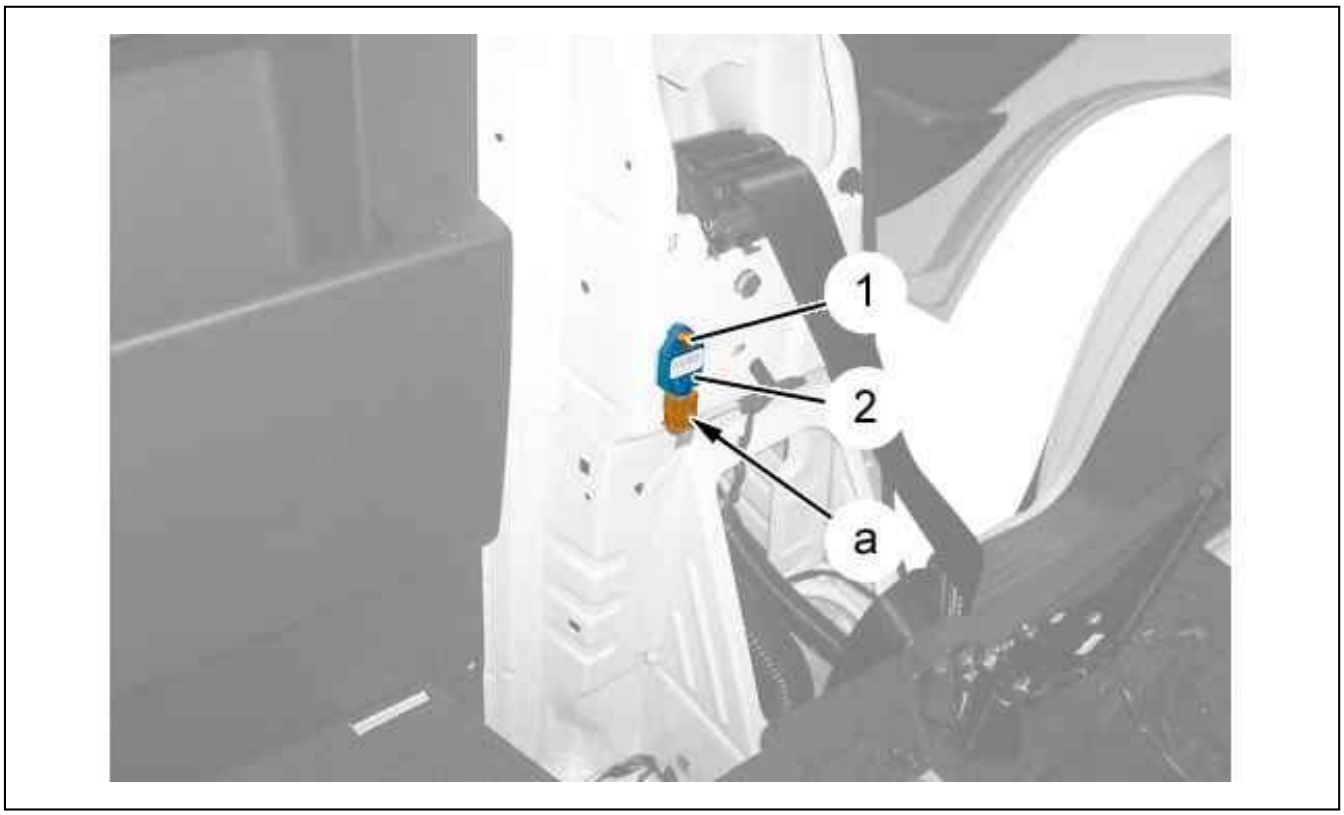

Figure : C5JM048D

Disconnect the connector (at "a").
Remove bolts (1).
Remove the side airbag acceleration sensor (2).

1.2. Passenger 's side

Remove : The B/C post trim (/) (Passenger 's side).

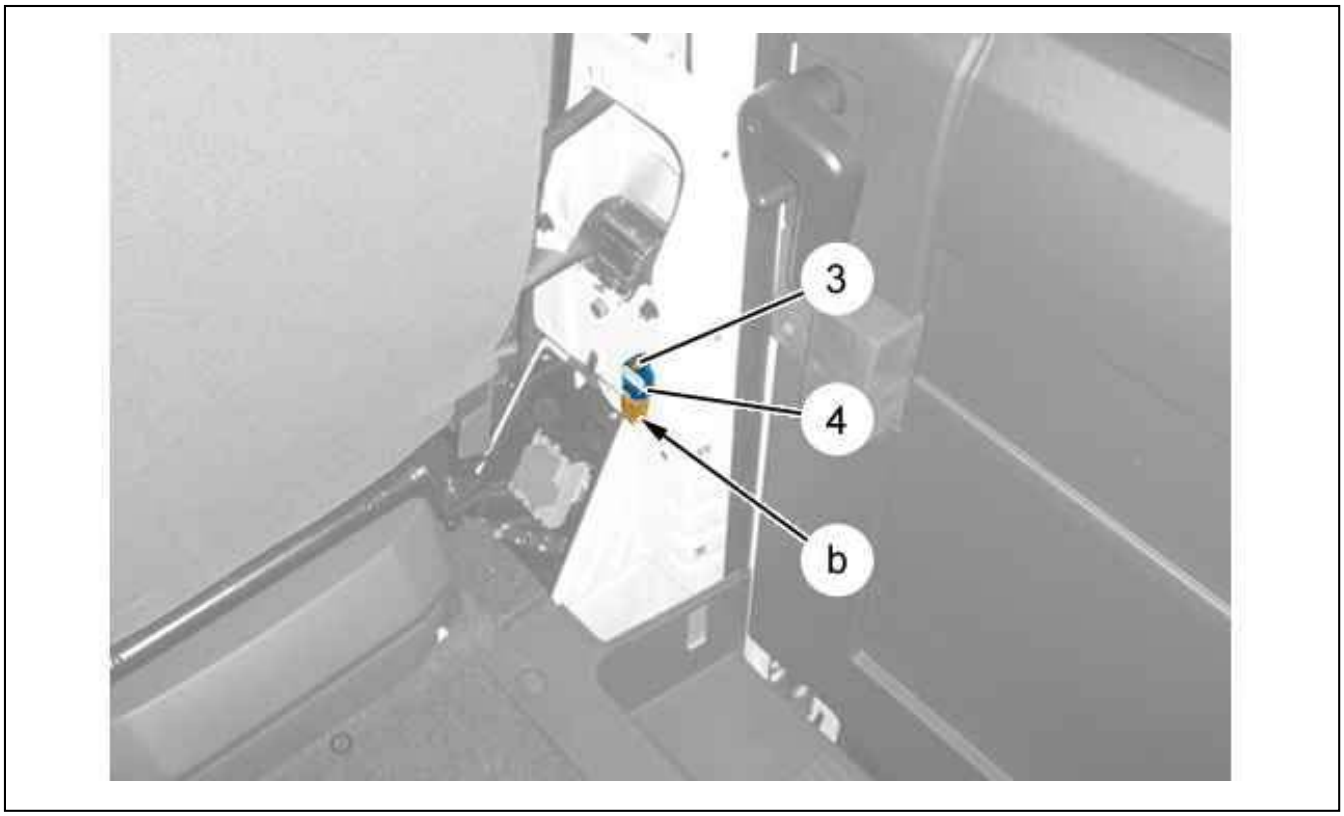

Figure : C5JM049D

Disconnect the connector (at "b").
Remove bolts (3).
Remove the side airbag acceleration sensor (4).

2. Refitting

Proceed in the reverse order to removal.
Tighten the bolts (1), (3) to 1 ± 0,1 daN.m.
Check all the equipment works.

REMOVING - REFITTING : SIDE AIRBAG

ESSENTIAL : Observe the safety and cleanliness recommendations .

ESSENTIAL : Apply the pyrotechnic component safety instructions .

ESSENTIAL : Apply the procedure to deactivate the centralised airbag and seat belt system .

CAUTION : Release and disconnect : The connectors ; When connecting, ensure that the harnesses are correctly routed and clipped correctly.

CAUTION : The connectors must be disconnected without exerting any stress on the harnesses and the connectors (No pulling of the harnesses is permitted).

1. Removing

Disconnect the battery .

N.B. : (*) Wait 10 minutes in the case of abnormal operation of the airbag warning lamp.

Remove :

- The front seat
- The trimmed seatback cushion

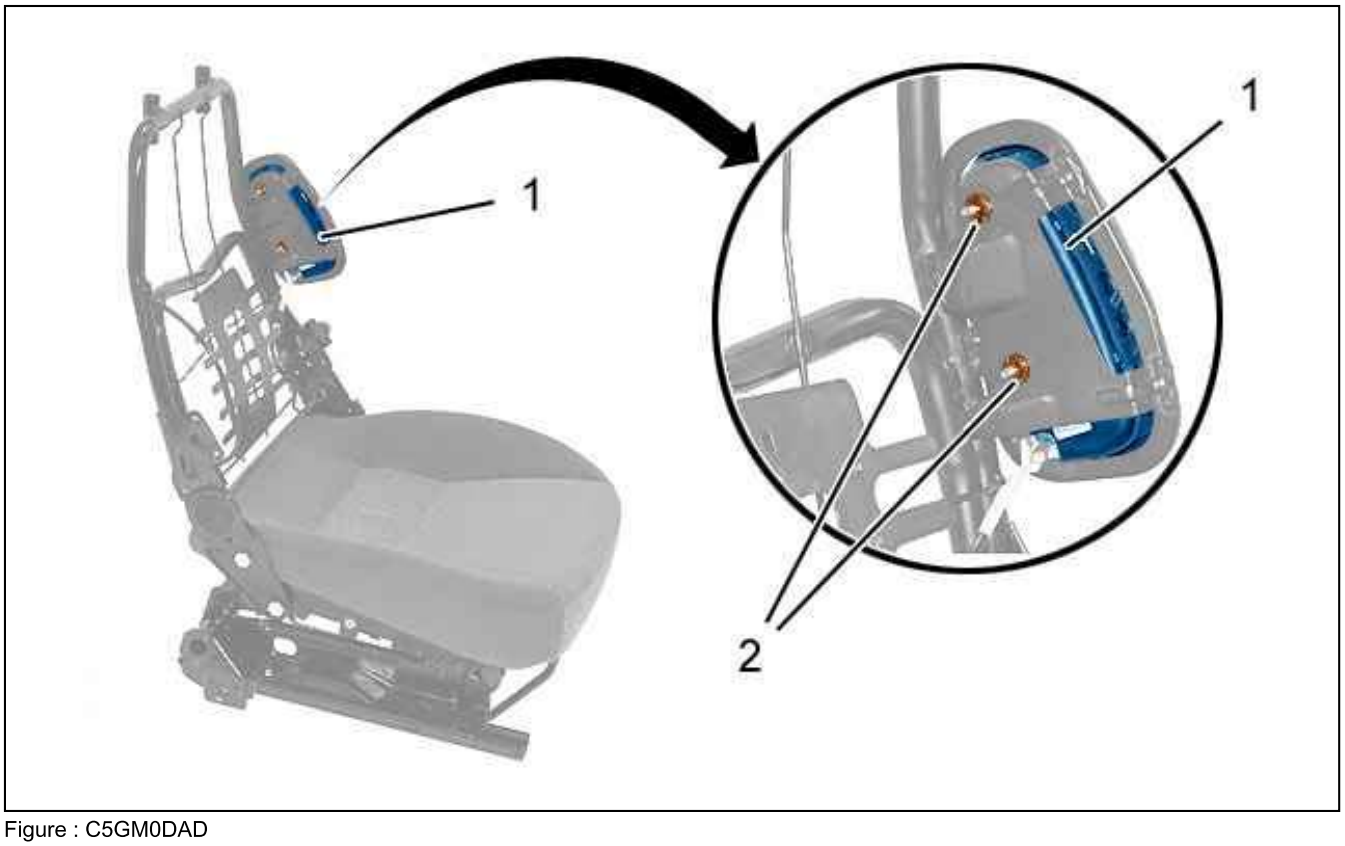

Figure : C5GM0DAD

Remove the nuts (2).
Detach : The side air bag (1).

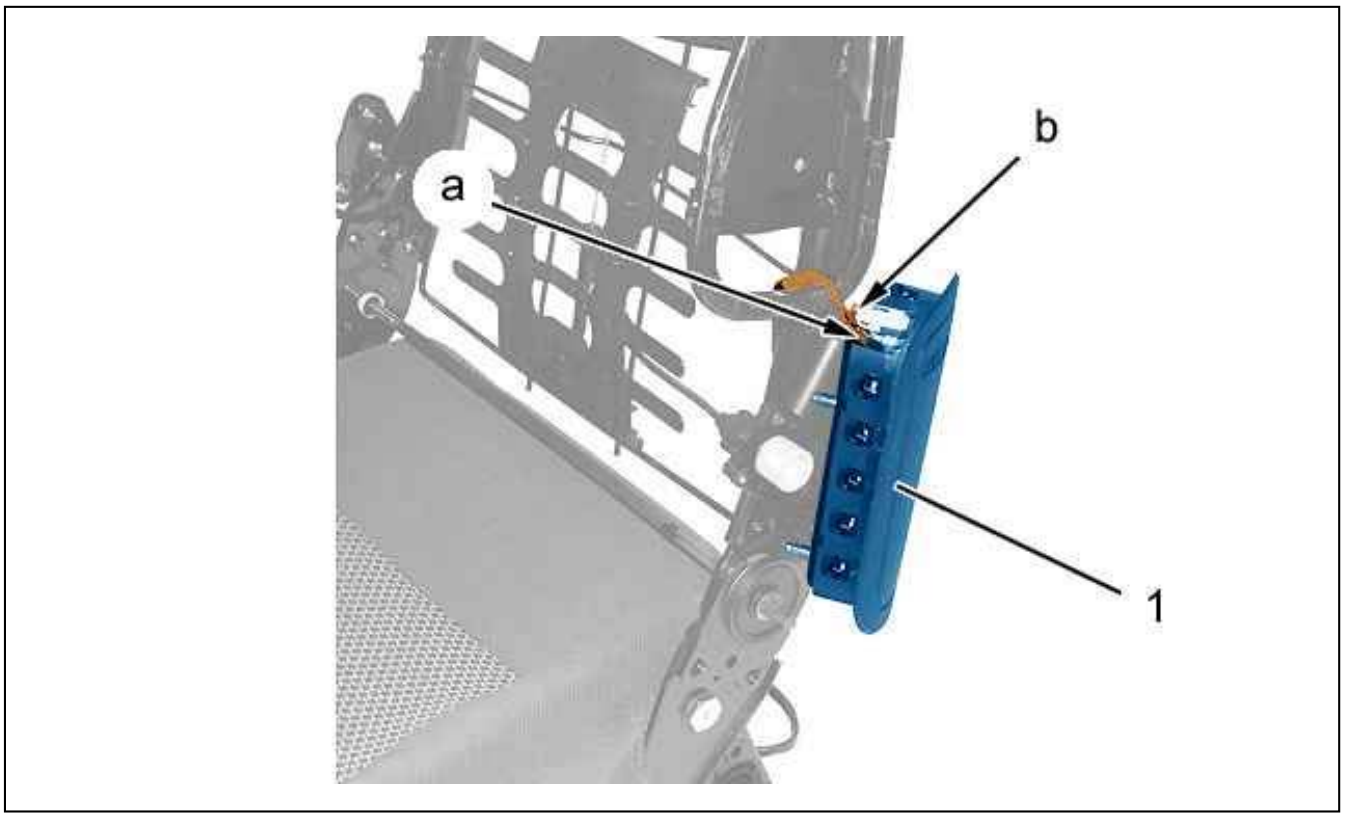

Figure : C5GM0DBD

ESSENTIAL : When removing an airbag, disconnect the supply connector first.

Unplug (as "a").
Disconnect the connector (as "b").
Remove : The side air bag (1).

ESSENTIAL : Apply the procedure for destruction of the pyrotechnic components .

ESSENTIAL : Apply the procedure for replacement of the pyrotechnic components following triggering of the air bags and seat belts .

2. Refitting

ESSENTIAL : When refitting an airbag, connect the earth connector first.

Proceed in the reverse order to removal.
Reconnect the battery.

ESSENTIAL : Apply the procedure to deactivate the centralised airbag and seat belt system .

Check the operation of the equipment.

REMOVING - REFITTING : STEERING WHEEL CONTROLS

ESSENTIAL : Observe the safety and cleanliness recommendations.

1. Removing

Disconnect the battery.
Put the wheels in the straight ahead position.
Push back the steering wheel as far as it will go.
Remove the steering wheel (see the relevant operation).



Figure : C5FP0YPD

Remove lower panel (1) (see the relevant operation).

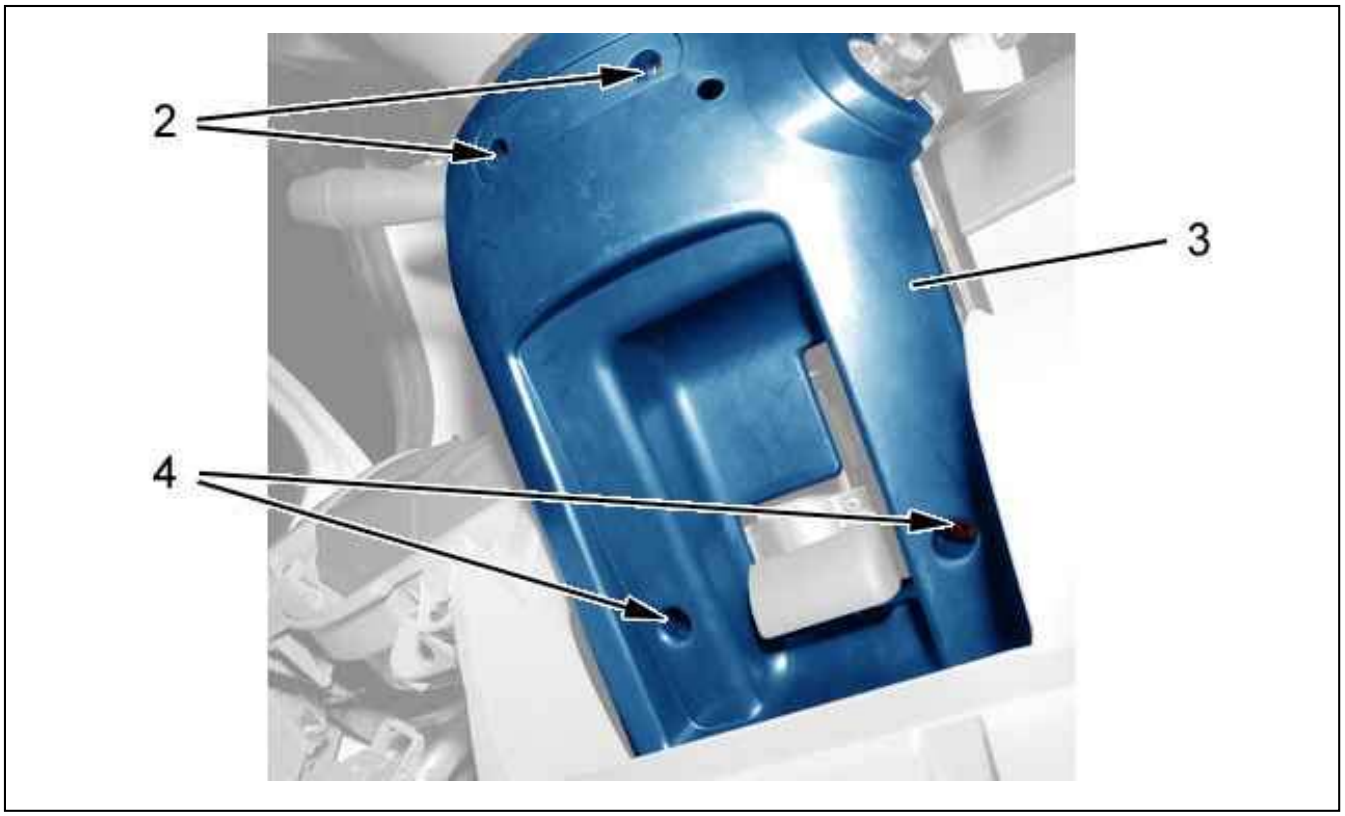

Figure : C5FP0YQD

Remove :

- The screws (2) and (4)
- The lower trim on the steering column (3)

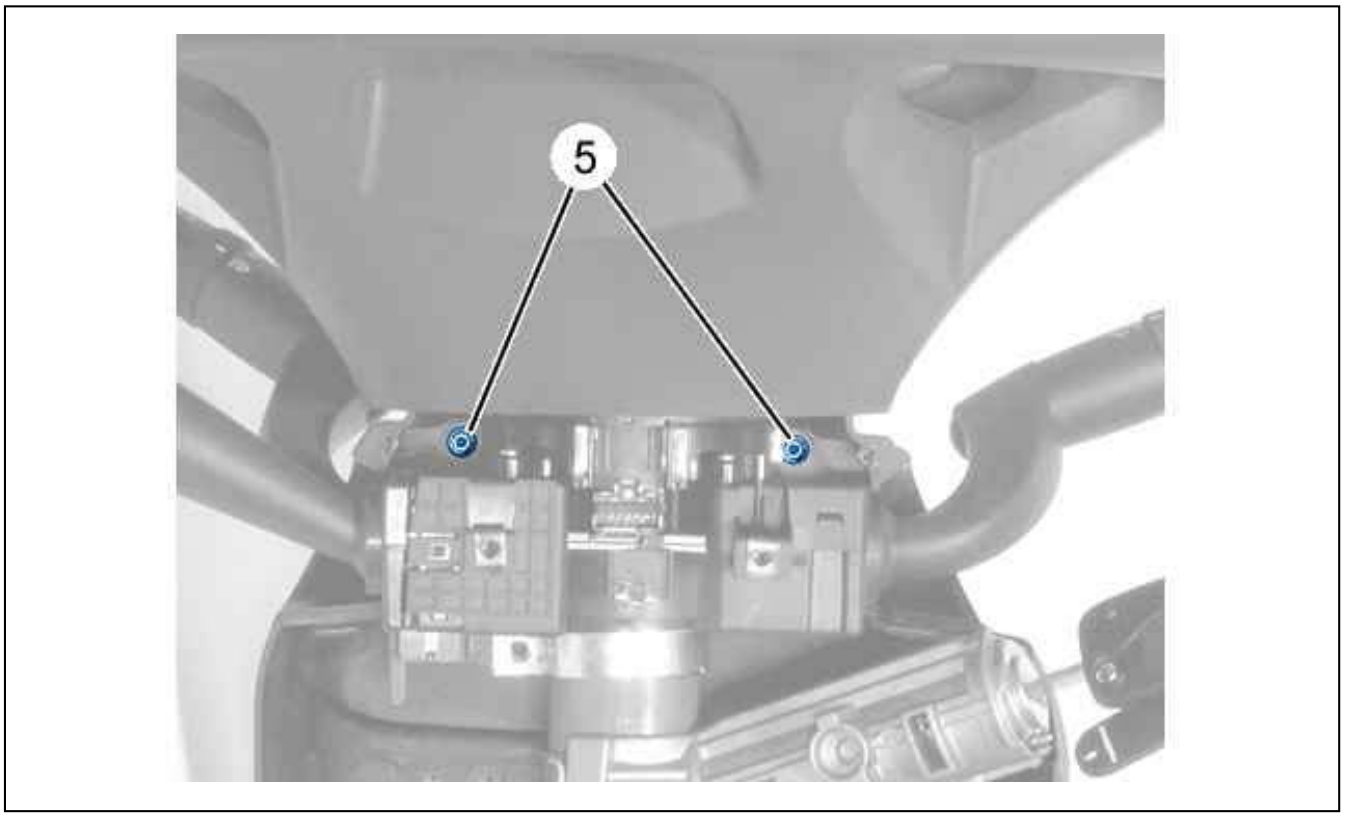

Figure : C5FP0YYD

Remove the bolts (5).

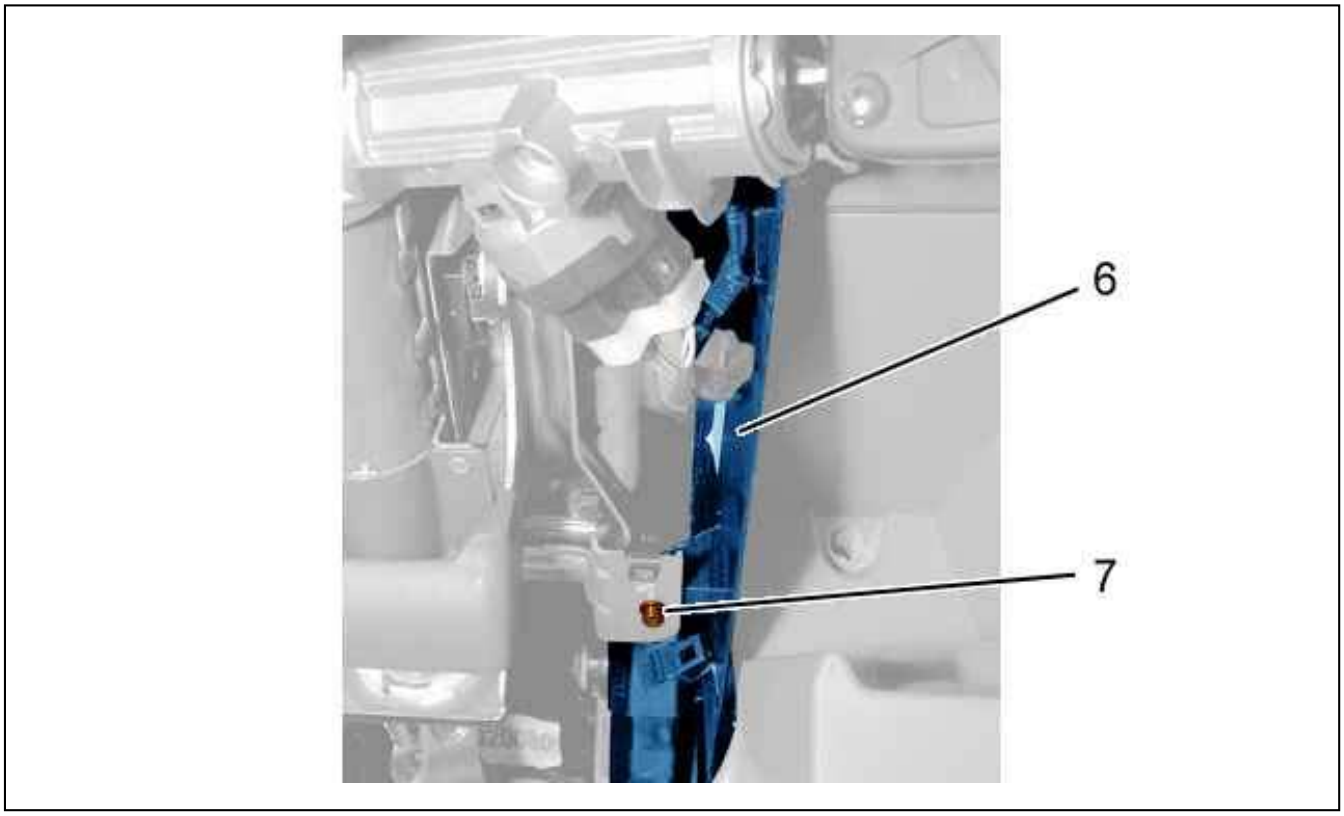

Figure : C5FP0YSD

Remove :

- The (7) bolt
- The steering column upper cowling (6)

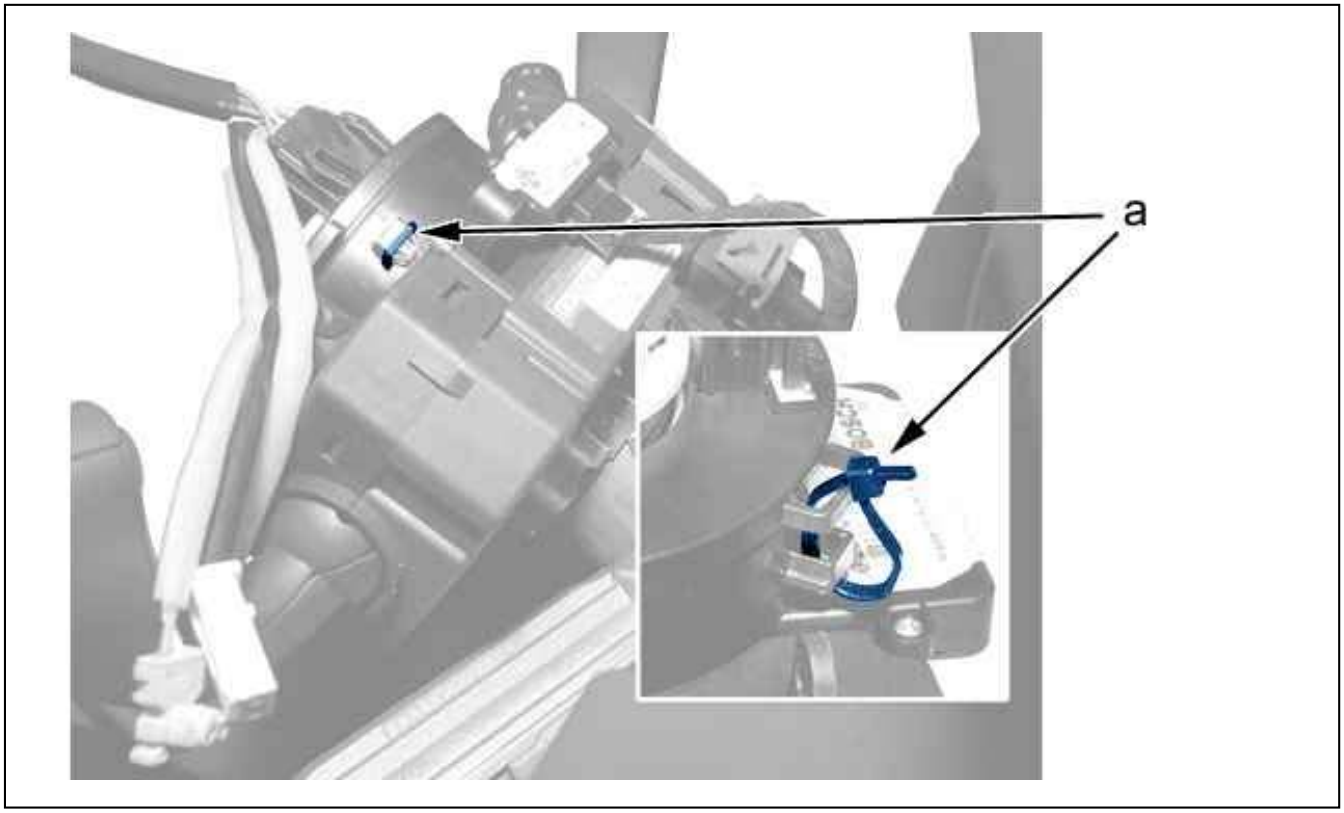

Figure : C5FP0YTD

Fit a plastic collar to maintain the position of the rotary switch (at "a").

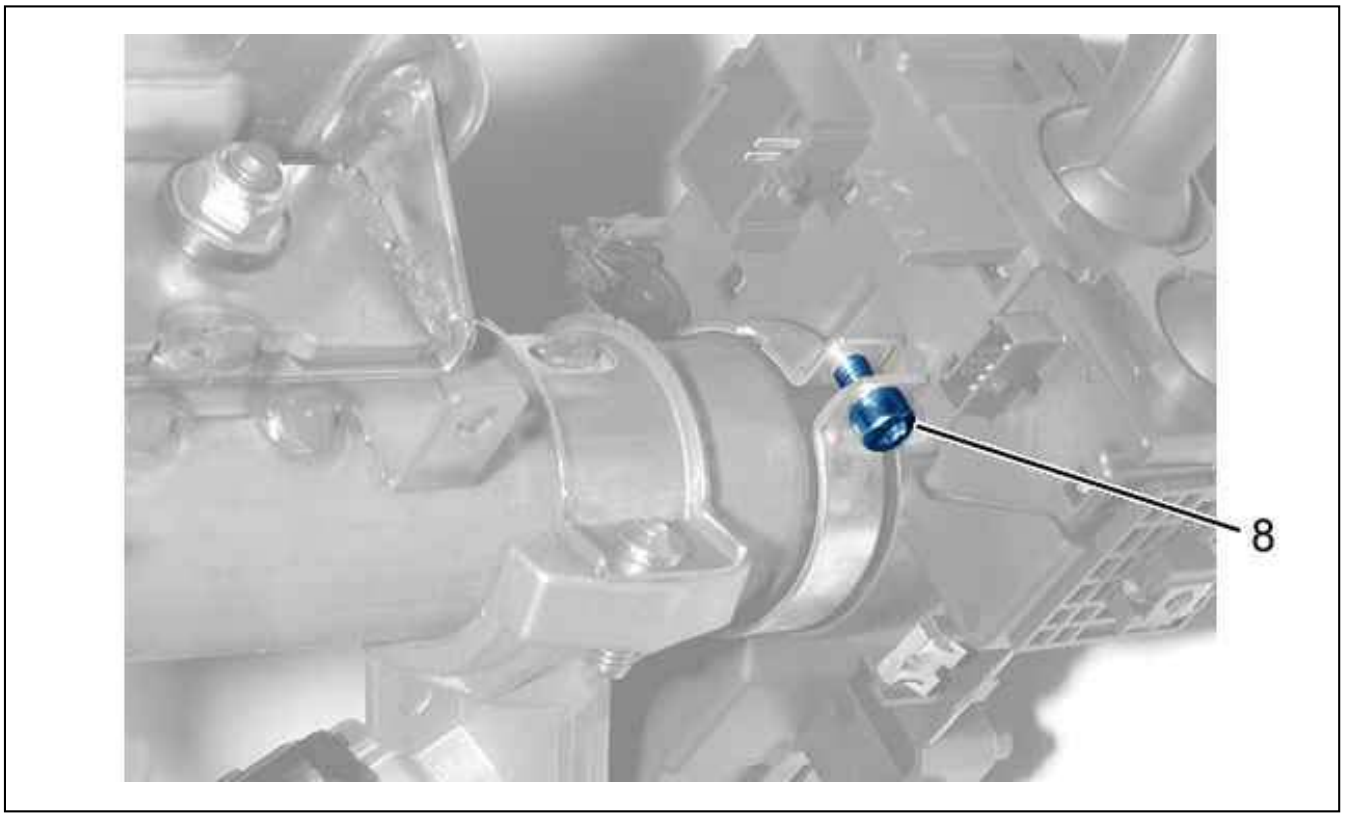

Figure : B3EP18ND

Remove bolts (8).

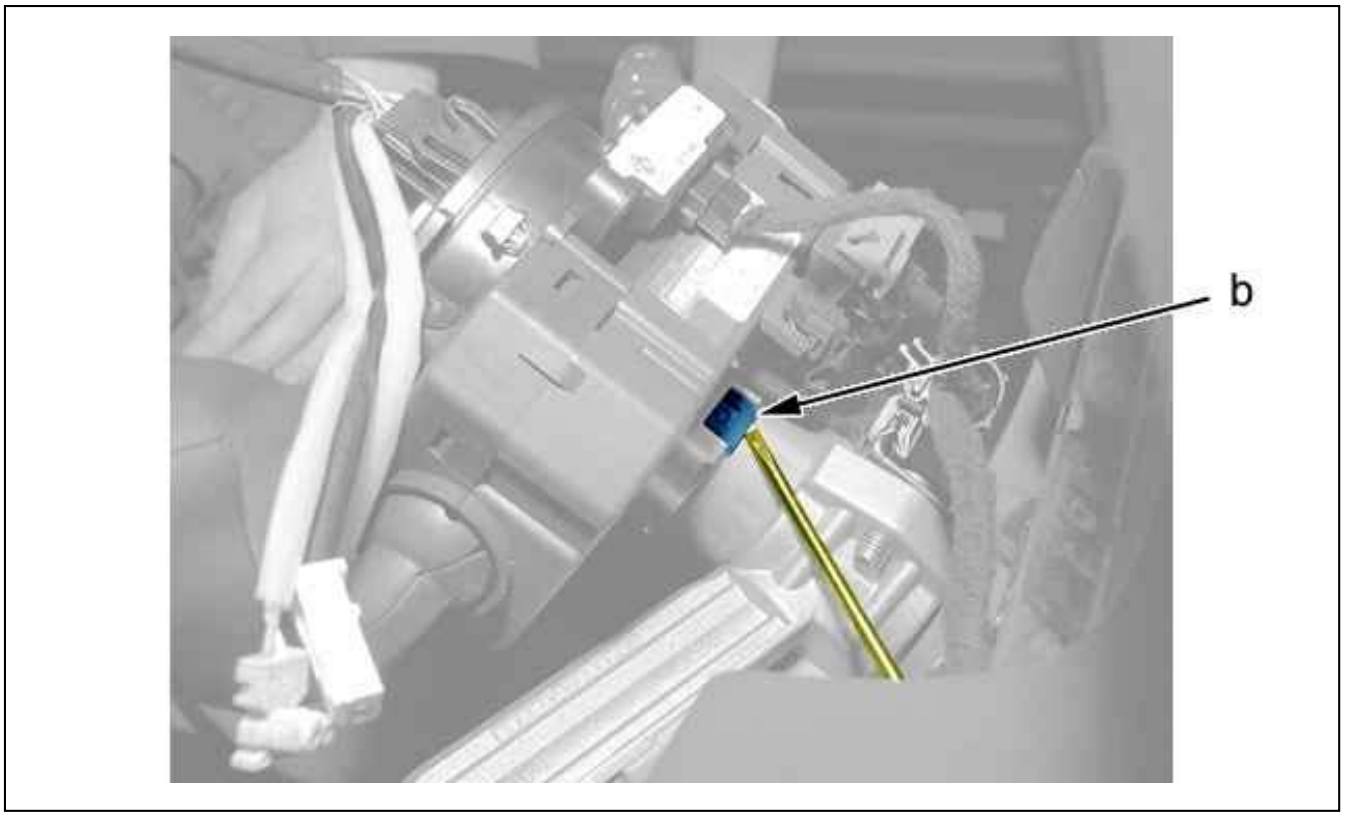

Figure : C5FP0YZD

Detach the assembly of controls under the steering wheel (at "b") By means of a screwdriver.
Disengage all the controls under the steering wheel.
Disconnect the connectors .
Remove the steering wheel controls assembly .

2. Refitting

Replace the steering wheel controls assembly.
Connect the connectors .
Fit the bolt (8) ; Tighten to 0,5 ± 0,2 daN.m.
Cut and remove the plastic collar.
Refit :

- The steering column upper cowling (6)
- The (7) bolt ; Tighten to 0,2 ± 0,02 daN.m
- The bolts (5) ; Tighten to 0,2 ± 0,02 daN.m
- The lower trim on the steering column (3)
- The bolts (4) ; Tighten to 0,2 ± 0,02 daN.m
- The bolts (2) ; Tighten to 0,2 ± 0,02 daN.m
- The lower panel (1) (see the relevant operation)
- The steering wheel (see the relevant operation)

Reconnect the battery.
Check that the steering wheel electrical controls operate correctly.

REMOVING - REFITTING : REVERSING CAMERA SCREEN

ESSENTIAL : Observe the safety and cleanliness recommendations .

1. Removing

Disconnect the ancillaries battery .

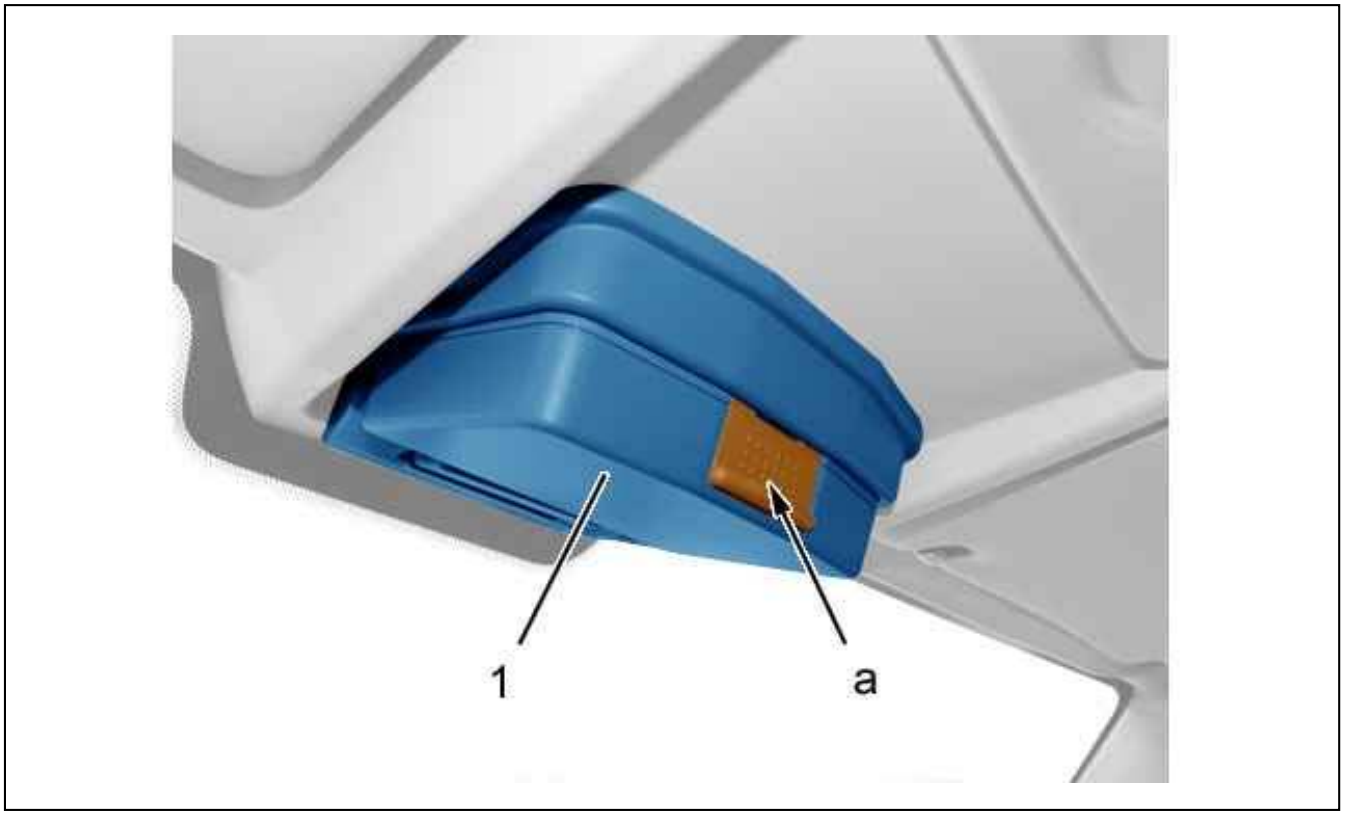

Figure : C5FG1QID

Open the screen (1) by unclipping (at "a").



Figure : C5FG1QJD

Remove the bolts (2).
Release the screen (1).

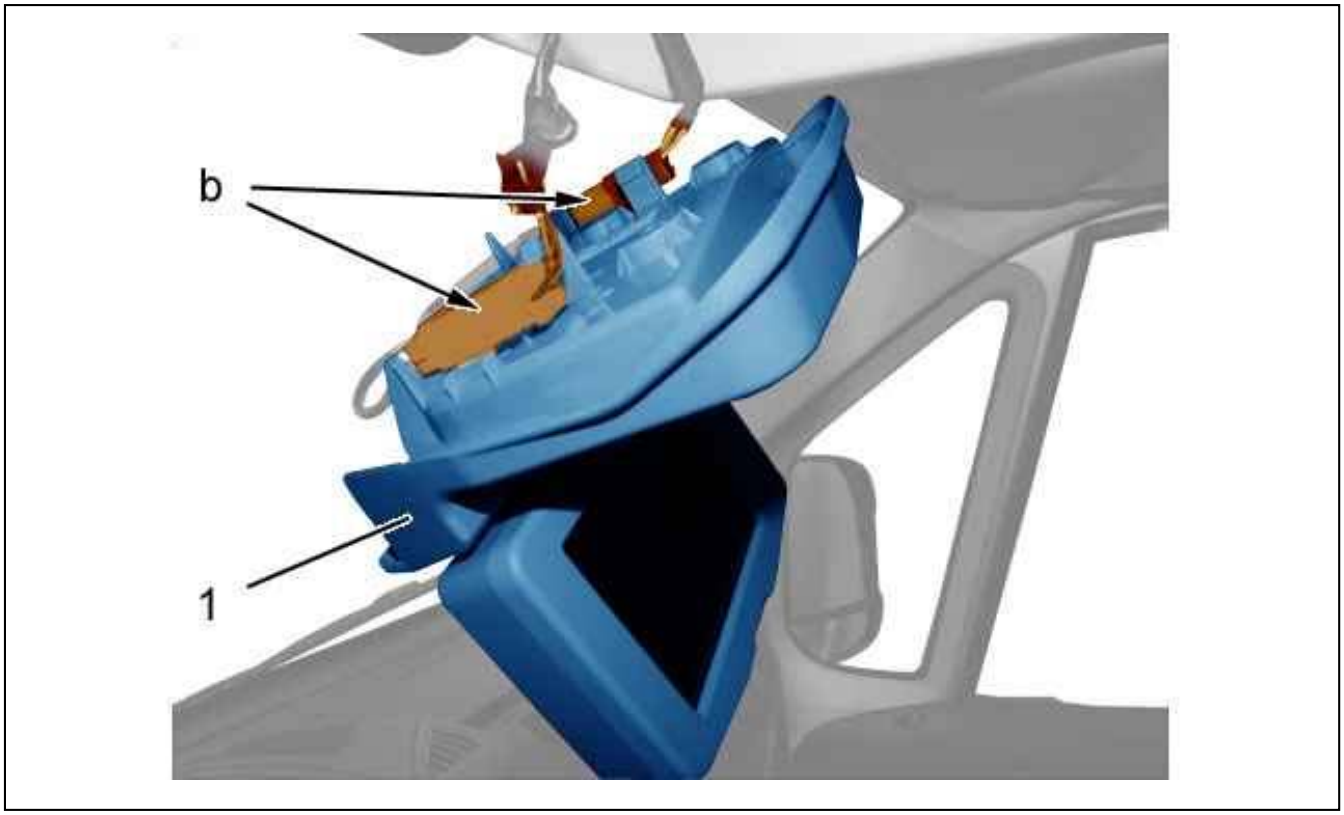

Figure : C5FG1QKD

Disconnect the connectors (at "b").

Remove the screen (1).

2. Refitting

Proceed in the reverse order to removal.
Reconnect the ancillaries battery.
Check all the equipment works.

REMOVING - REFITTING : REVERSING CAMERA

ESSENTIAL : Observe the safety and cleanliness recommendations .

1. Removing

Disconnect the ancillaries battery .

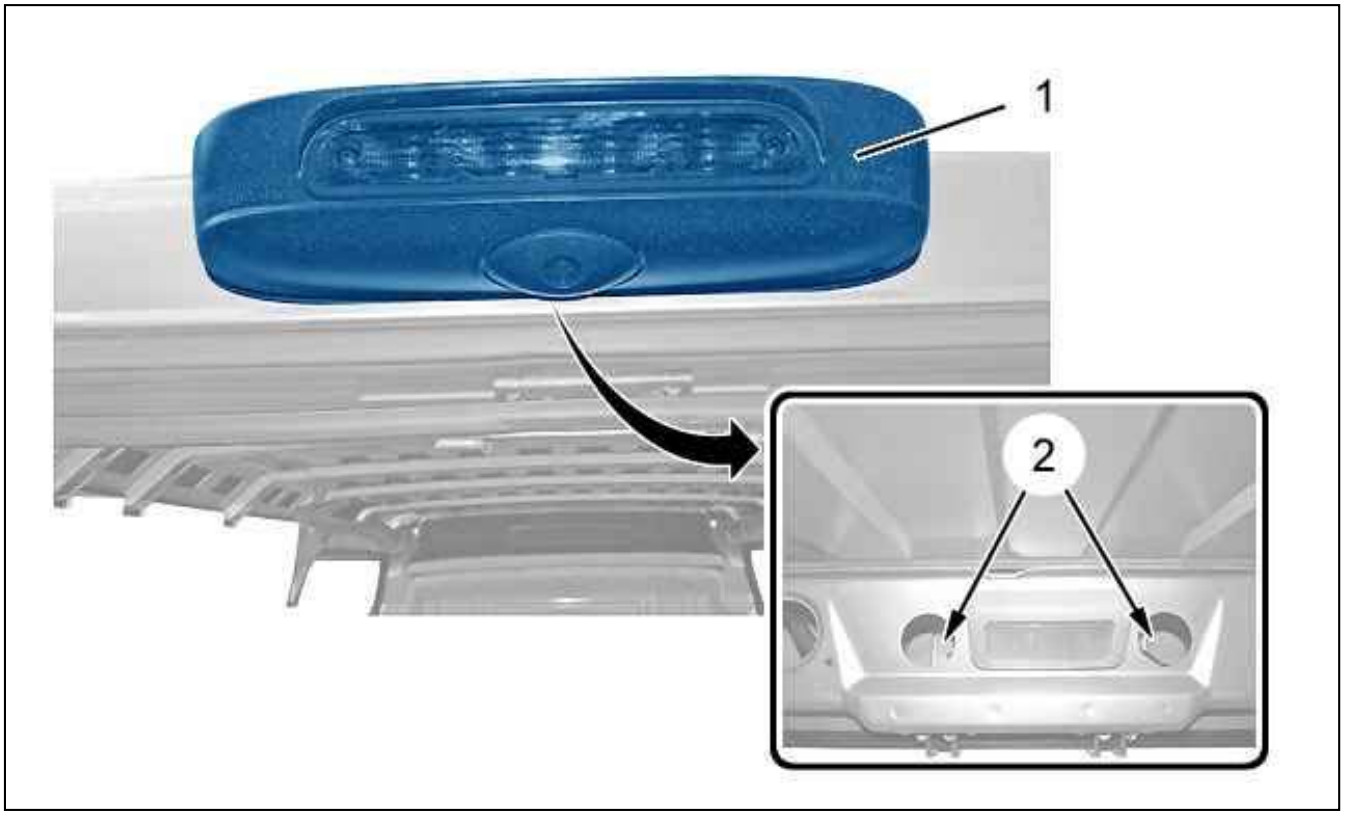

Figure : C5FG1QLD

Remove the nuts (2).
Release the 3rd stop lamp and reversing camera assembly (1).

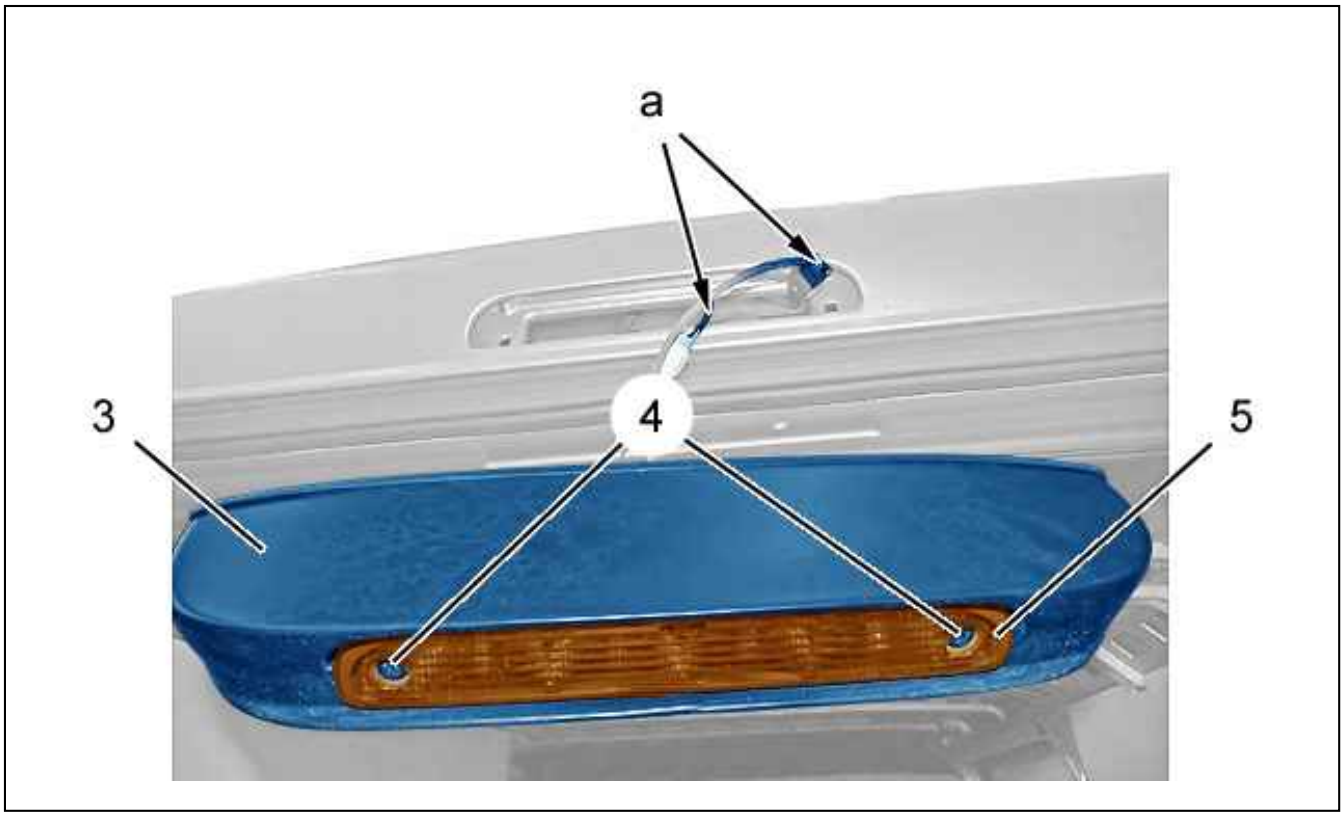

Figure : C5FG1QMD

Disconnect the connectors (at "a").
Remove :

- The bolts (4)
- The 3rd stop lamp (5)
- The reversing camera (3)

2. Refitting

Proceed in the reverse order to removal.
Reconnect the ancillaries battery.
Check all the equipment works.

REMOVING - REFITTING : RADIO AERIAL

1. Preliminary operations

Remove :

- The sun visor module (see the relevant operation)
- The headlining (see the relevant operation)

2. Removing

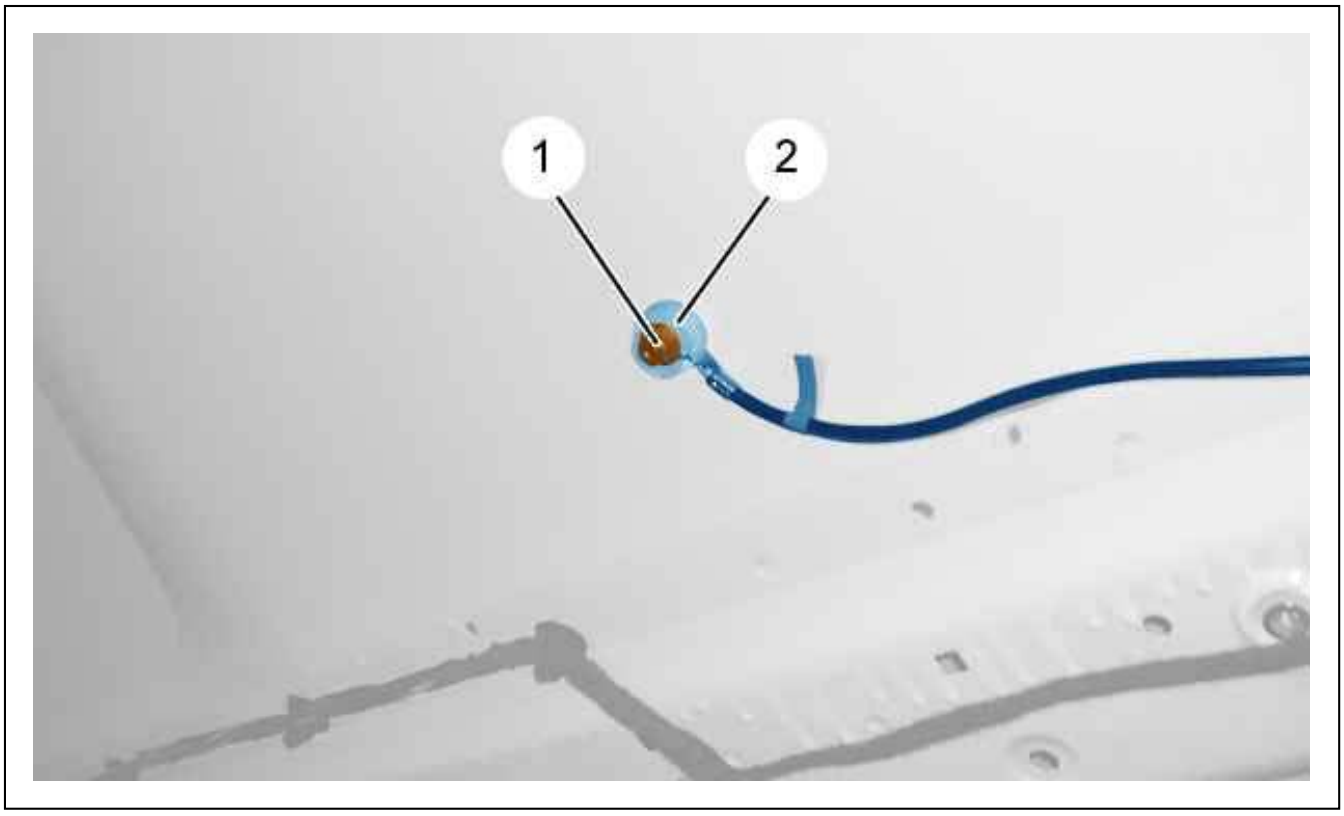

Figure : D5AP037D

Remove :

- The (1) bolt
- The aerial support (2)

3. Refitting

Proceed in the reverse order to removal.
Check all the equipment works.

REMOVING - REFITTING : AUDIO SYSTEM

ESSENTIAL : Observe the safety and cleanliness recommendations .

1. Tooling

Tool	Reference	Designation
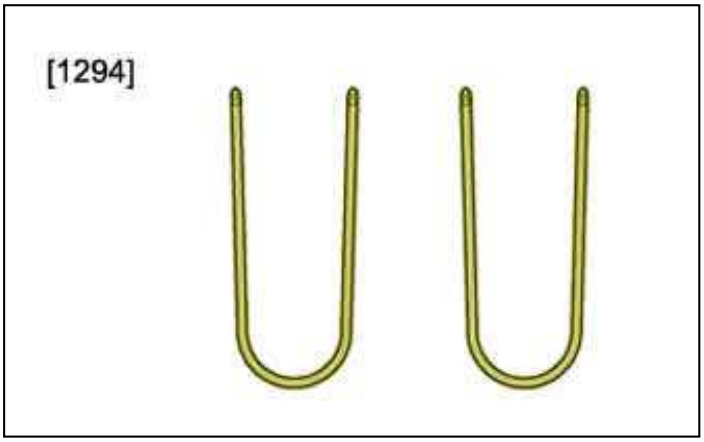 Figure : E5AB16MT	[1294]	Pins

2. Removing

Disconnect the battery .



Figure : D5AP039D

Partially extract the audio system (1) ; Using the pins [1294] (at "a").

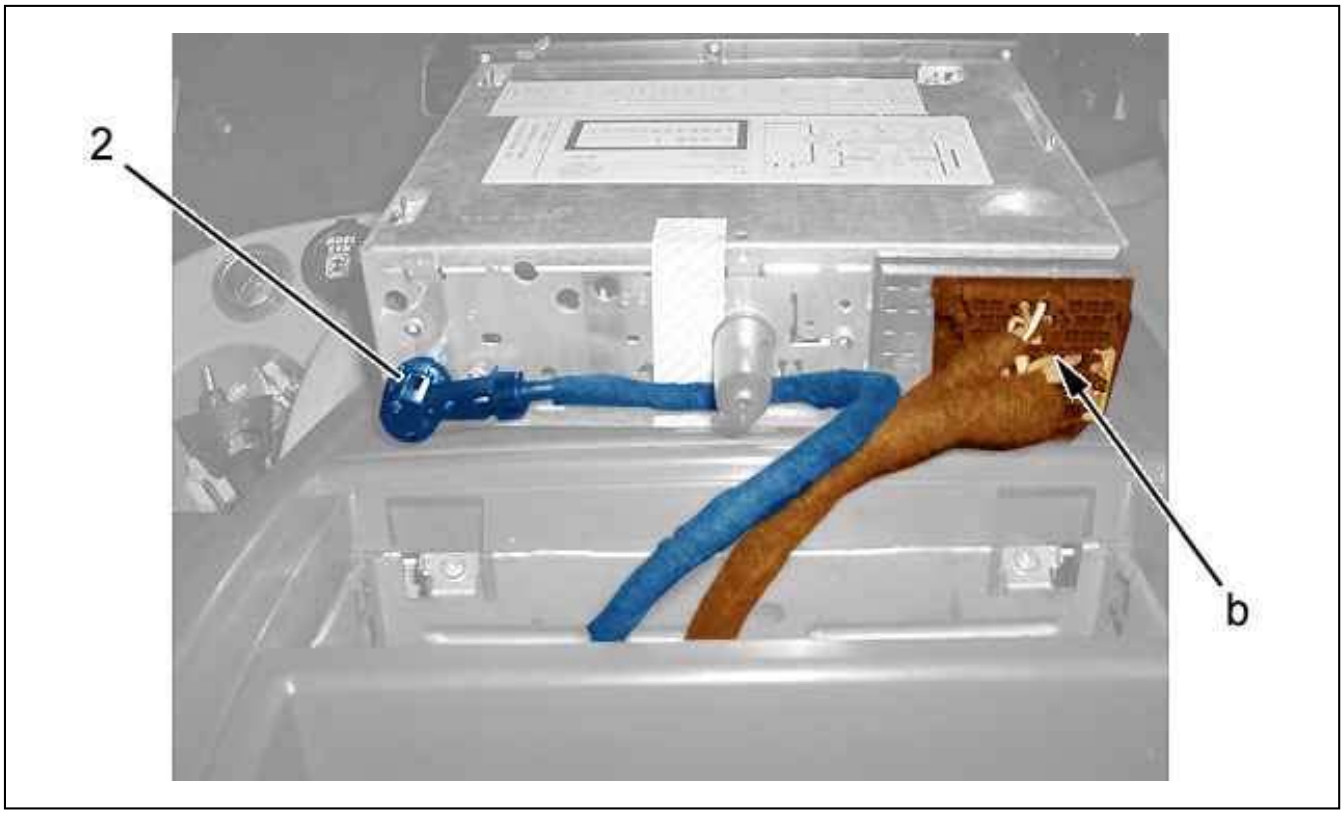

Figure : D5AP03AD

Unplug :

- The radio connector (at "b")

- The audio system aerial cable (2)

Remove the audio system 1.

3. Refitting

Connect :

- The audio system aerial cable (2)
- The radio connector (at "b")

Refit the audio equipment (1).
Reconnect the battery.
Check that the audio system works.

REMOVING - REFITTING : SPEAKER

ESSENTIAL : Observe the safety and cleanliness recommendations.

1. Recommended tools

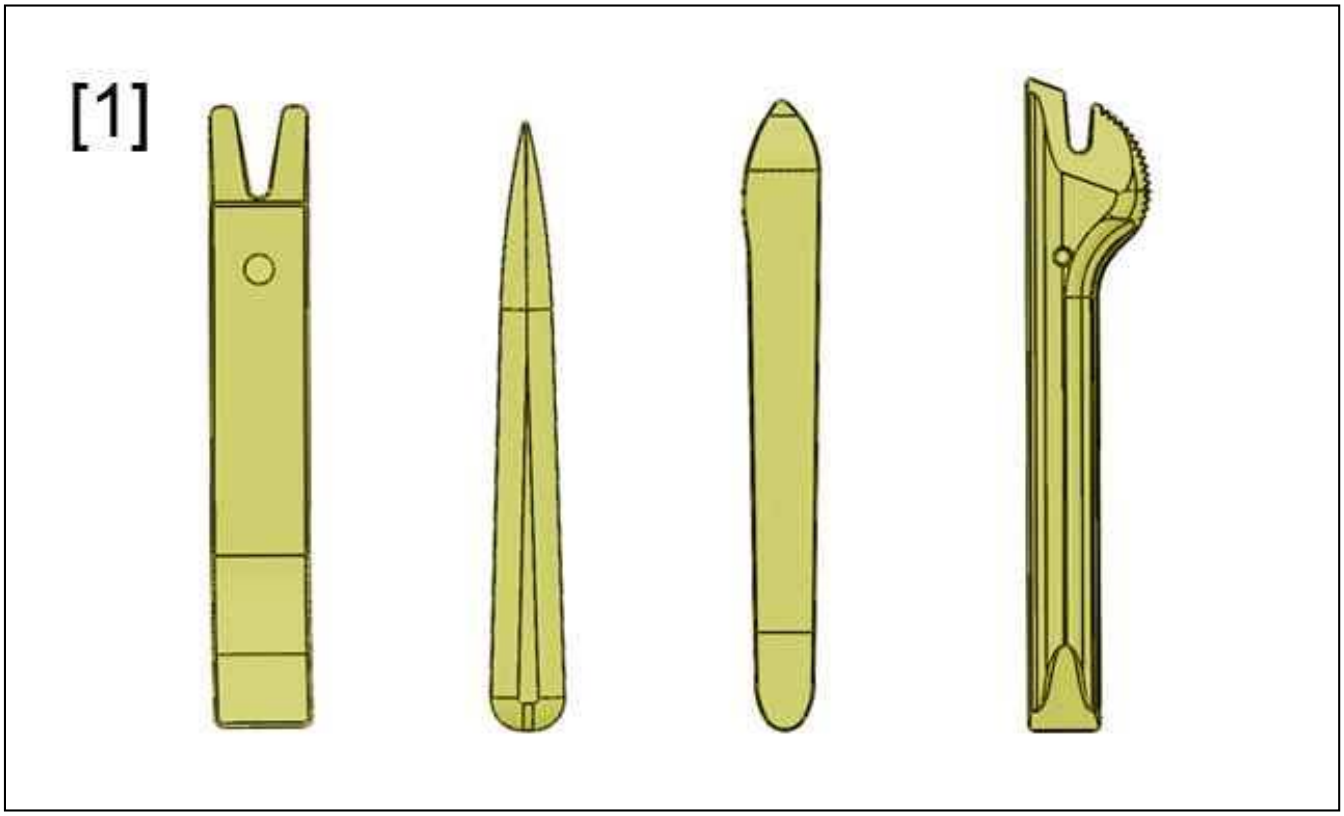

Figure : E5AP30WD

[1]Stripping tools(-).1350-ZZ.

2. Removing

Perform the following operations :

- Switch off the ignition
- Wait 3 minutes before disconnecting the battery
- Disconnect the battery

Inside lining (Tail panel).

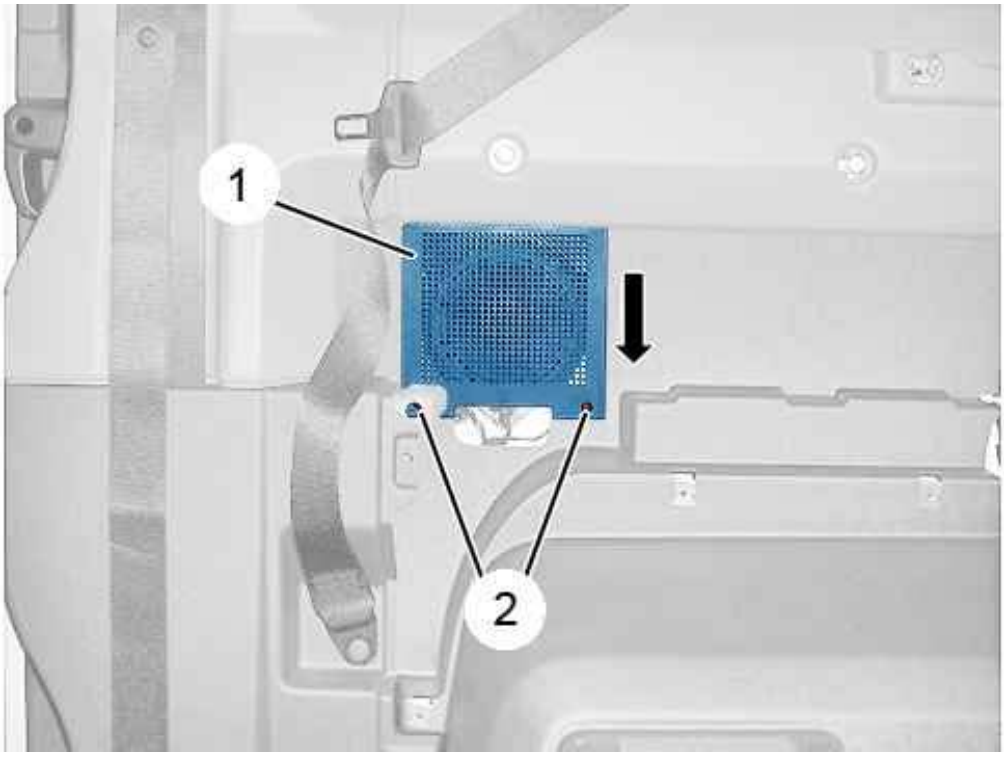

Figure : C5GM0B4D

Remove the bolts (2).
Detach then remove : The speaker grille (1)(In the direction of the arrow).

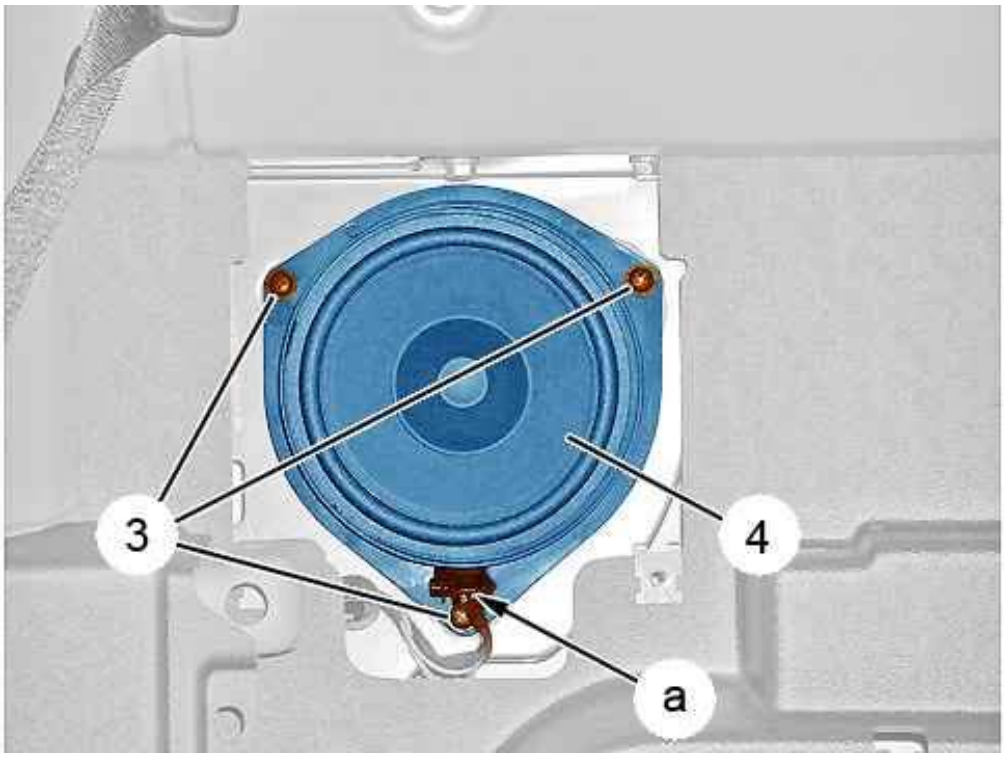

Figure : D5AM00RD

Disconnect the connector (at "a").

Remove :

- The bolts (3)
- The speaker (4)

3. Refitting

Proceed in the reverse order to removal.
Reconnect the battery.
Check the electrical operation of the equipment.

REMOVING - REFITTING : FRONT SUBFRAME

ESSENTIAL : Observe the safety and cleanliness recommendations.

1. Recommended tools

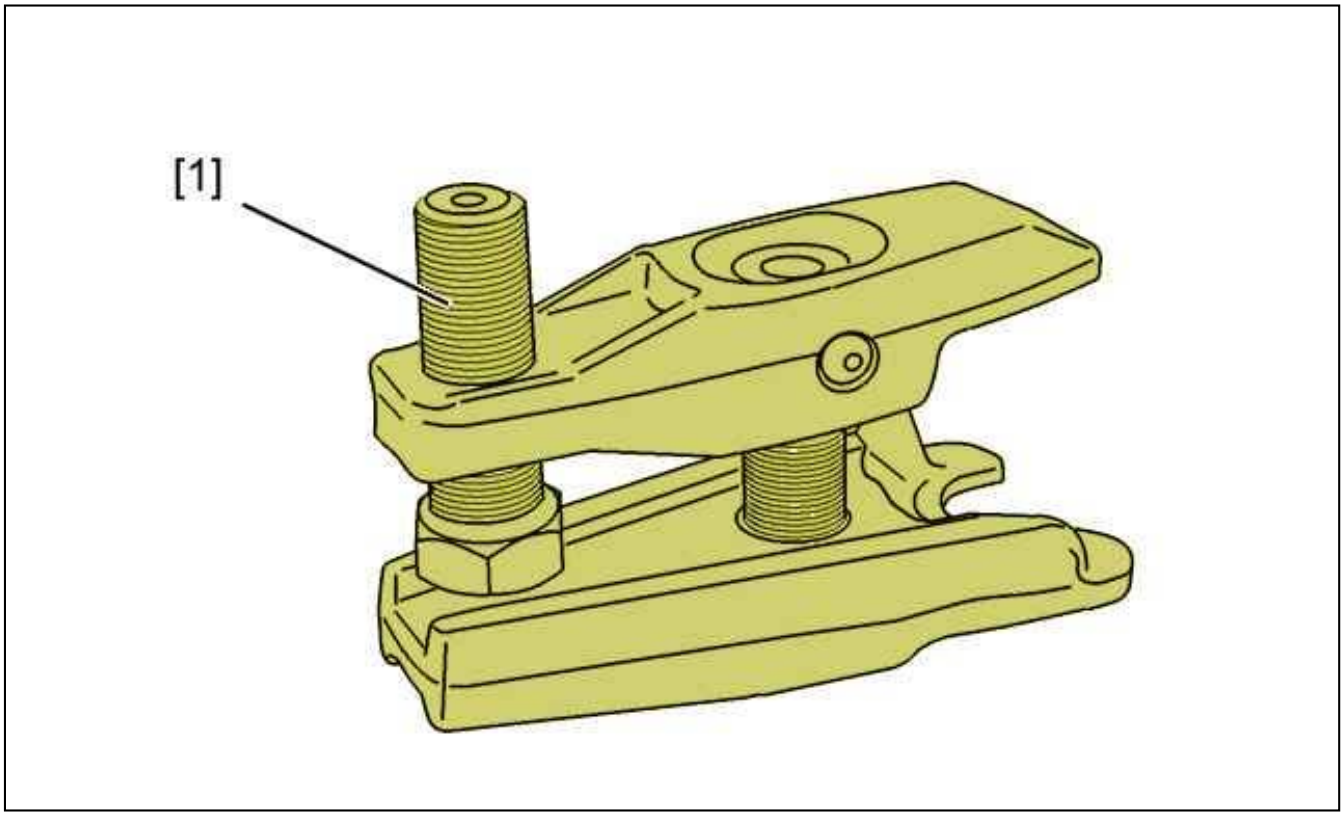

Figure : E5AP2WYD

Reference	Designation	Reference	Reference
[1]	ball-joint extractor	5707-T	(-).0919

2. Removing

Untighten the wheel screws (front).
Lift and support the front of the vehicle.
Remove the front wheels.

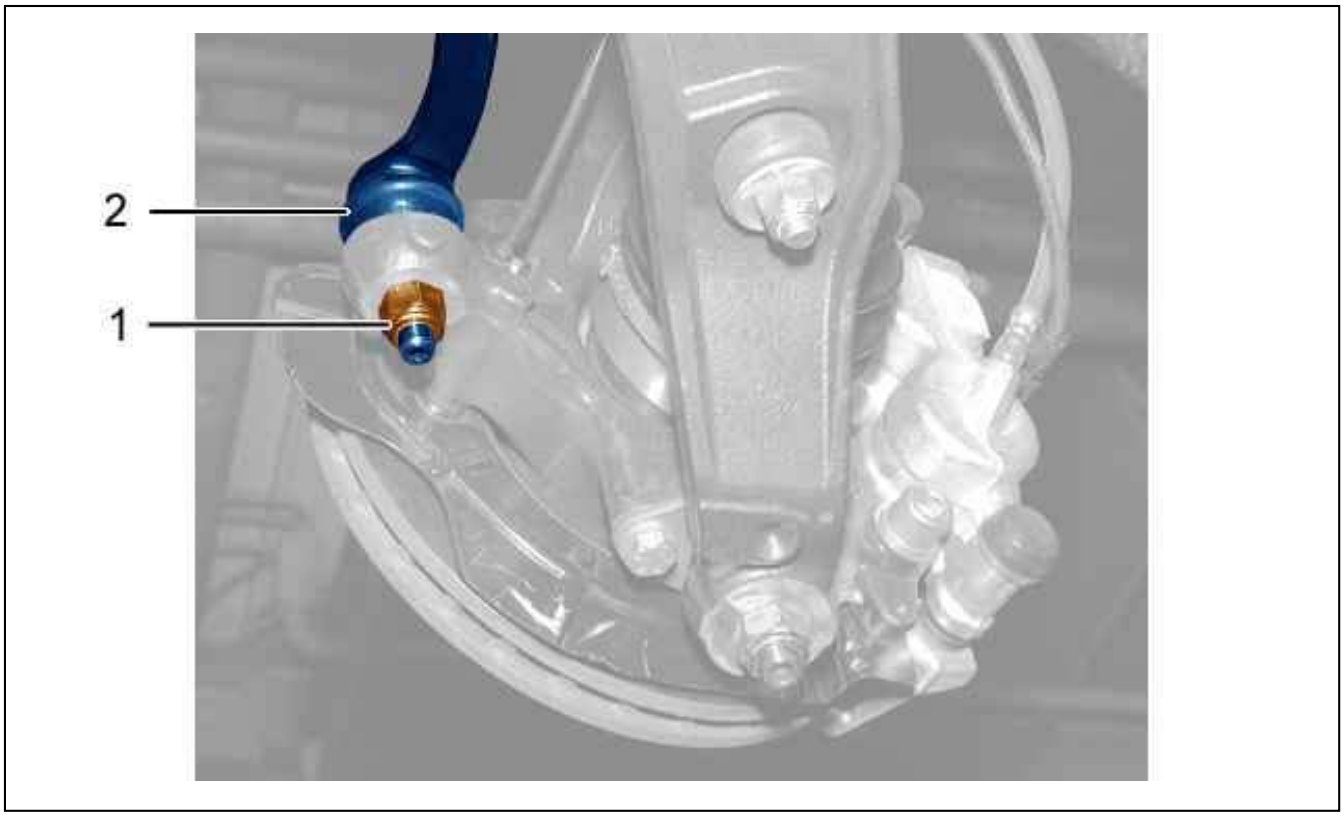

Figure : B3FP7JJD

Remove the nut (1) (on each side).
Uncouple the steering ball-joint (2) ; Using tool [1] (on each side).

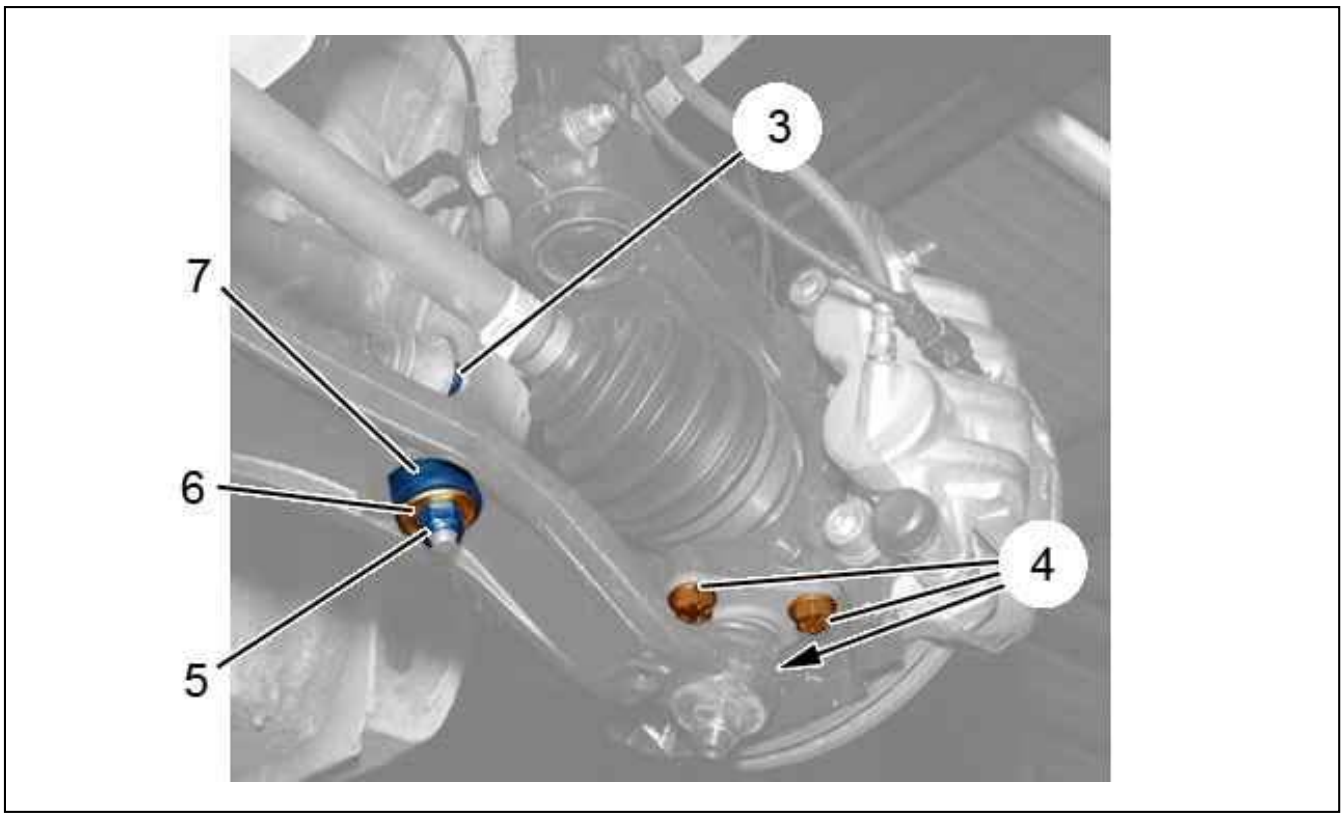

Figure : B3BP1CPD

Unscrew nut (3) (on each side).

Remove (on each side) :

- The nut (5)
- The washer (6)
- The silentblock (7)
- The 3 bolts (4)

Move aside the hub carrier (on each side).

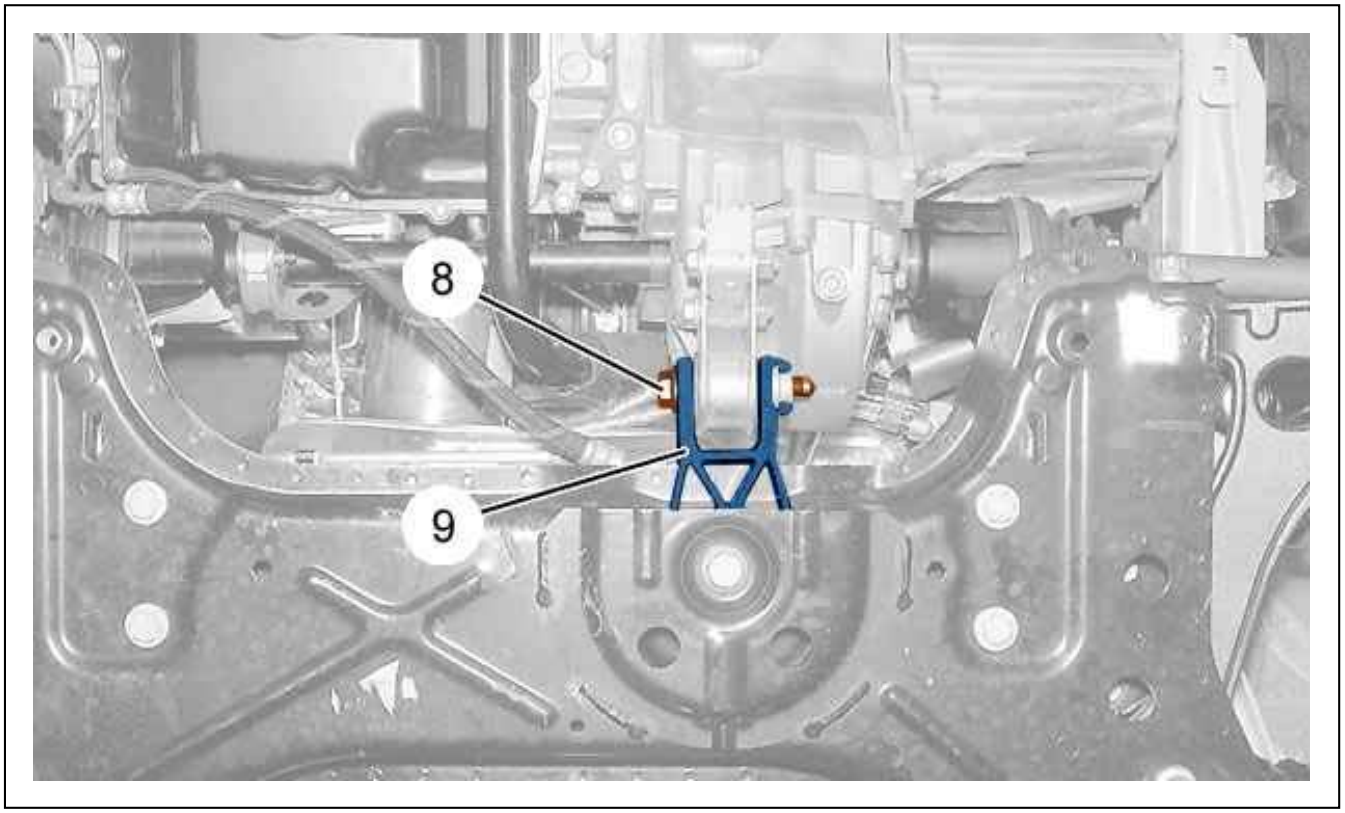

Figure : B3CP0BJD

Remove bolts (8).
Move aside the torque reaction rod (9) from the front subframe.
Position a lifting tool to retain the front sub-frame.

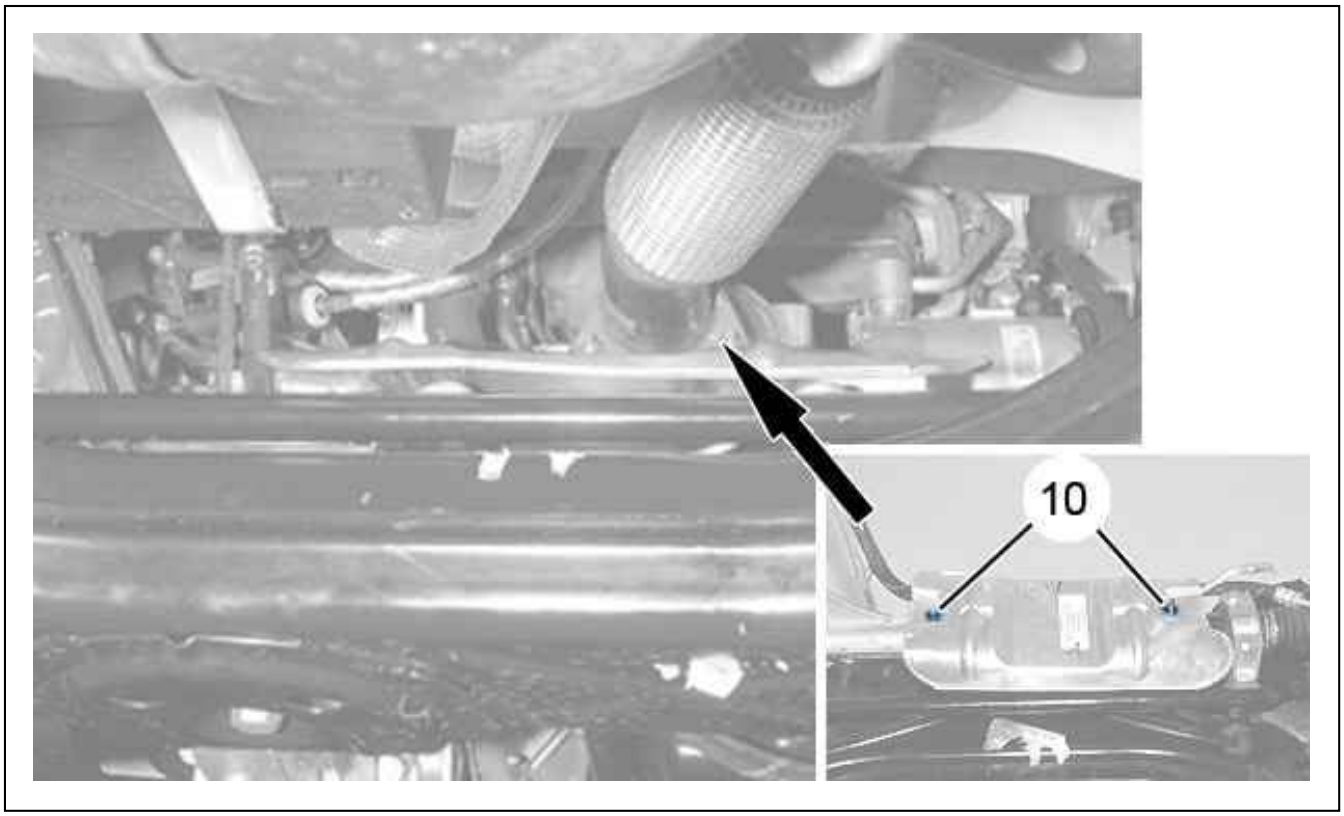

Figure : B3CP0BKD

Remove :

- The nuts (10)
- The steering mechanism thermal protector

Suspend the steering mechanism on the vehicle structure.

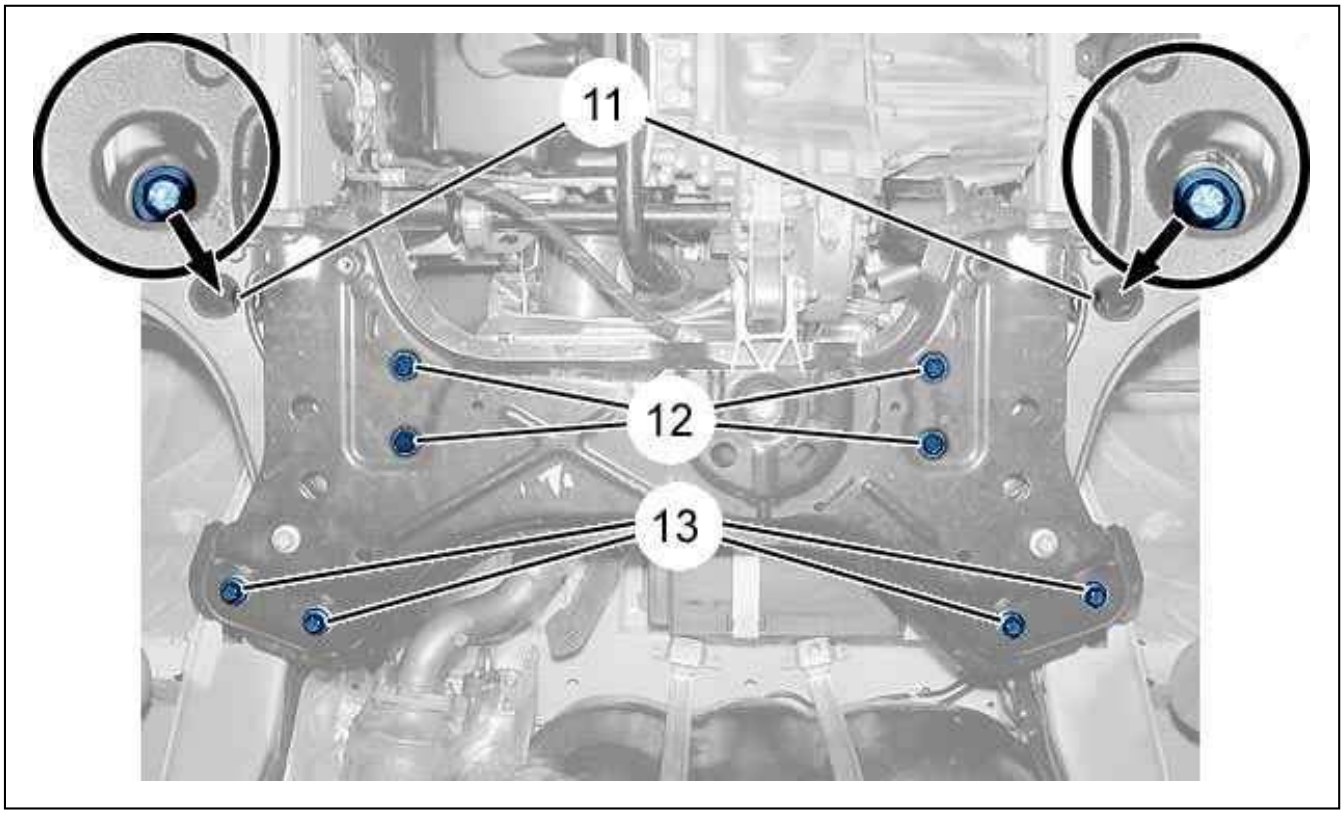

Figure : B3CP0CED

Remove :

- The bolts (11)
- The bolts (13)
- The bolts (12)

Remove the front subframe.

3. Refitting

N.B. : Always fit new Nylstop nuts.

Position the front subframe on the bodyshell.
Refit :

- The bolts (13) ; Tighten to 29 ± 1 daN.m
- The bolts (11) ; Tighten to 29 ± 1 daN.m
- The bolts (12) ; Tighten to 11 ± 1,4 daN.m
- The steering mechanism thermal protector
- The bolts (10) ; Tighten to 0,6 ± 0,17 daN.m

Engage the torque reaction rod (9) on the front subframe.
Refit bolt (8) ; Tighten to 13,5 ± 0,4 daN.m.
Position the hub carrier ball joint (on each side).
Refit (on each side) :

- The 3 bolts (4) ; Tighten to 11,5 ± 0,4 daN.m
- The silentblock (7)
- The washer (6)
- The nut (5)

Couple up the steering ball-joint (2) (on each side).
Refit the nut (1) ; Tighten to 8 ± 0,7 daN.m (on each side).
Fit the wheels.
Return the vehicle to its wheels.
Tighten (on each side) :

- The nut (3) to 5,6 ± 0,5 daN.m
- The nut (5) to 5,6 ± 0,5 daN.m

Tighten the wheel bolts .

REMOVING - REFITTING : BONNET COMPONENTS

1. Recommended tools

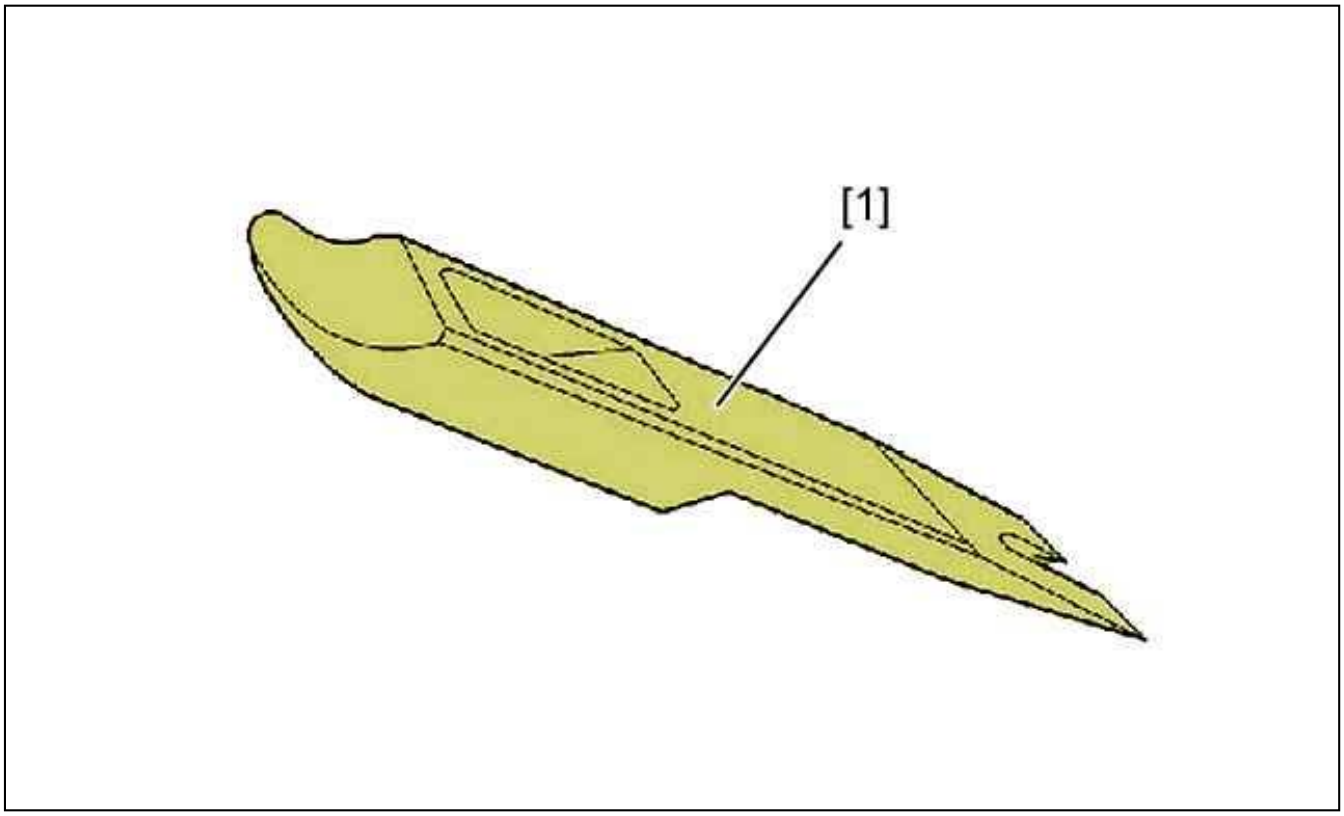

Figure : E5AP2THD

Reference	Designation	Reference
[1]	Unclipping lever	(-).1330-E
	Tool for removing side mouldings	8205-T.E

2. Removing

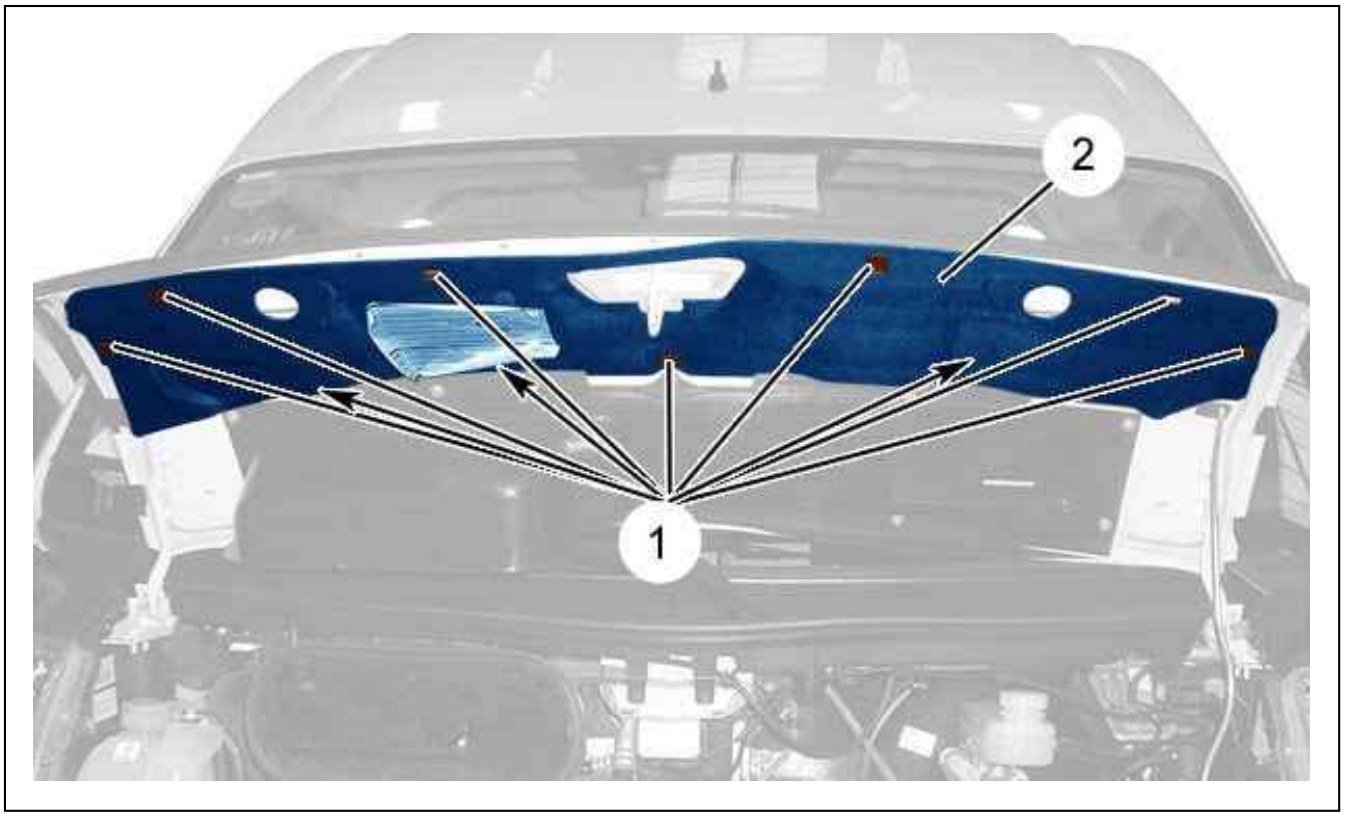

Figure : C4AP1M3D

Unclip the clips (1) ; Using tool [1].
Remove the bonnet sound proofing (2).

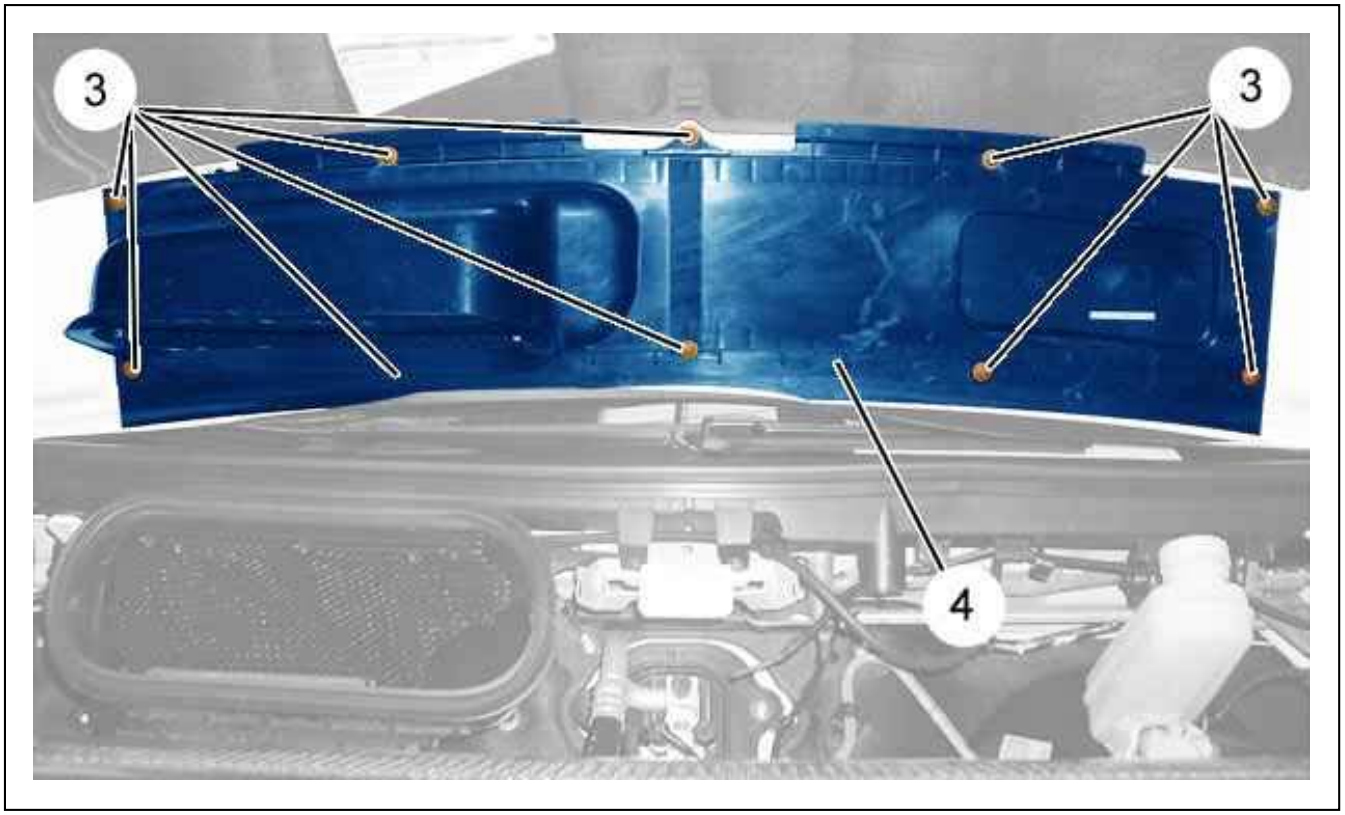

Figure : C4AP1M4D

Remove :

- The bolts (3)
- The trim (4)

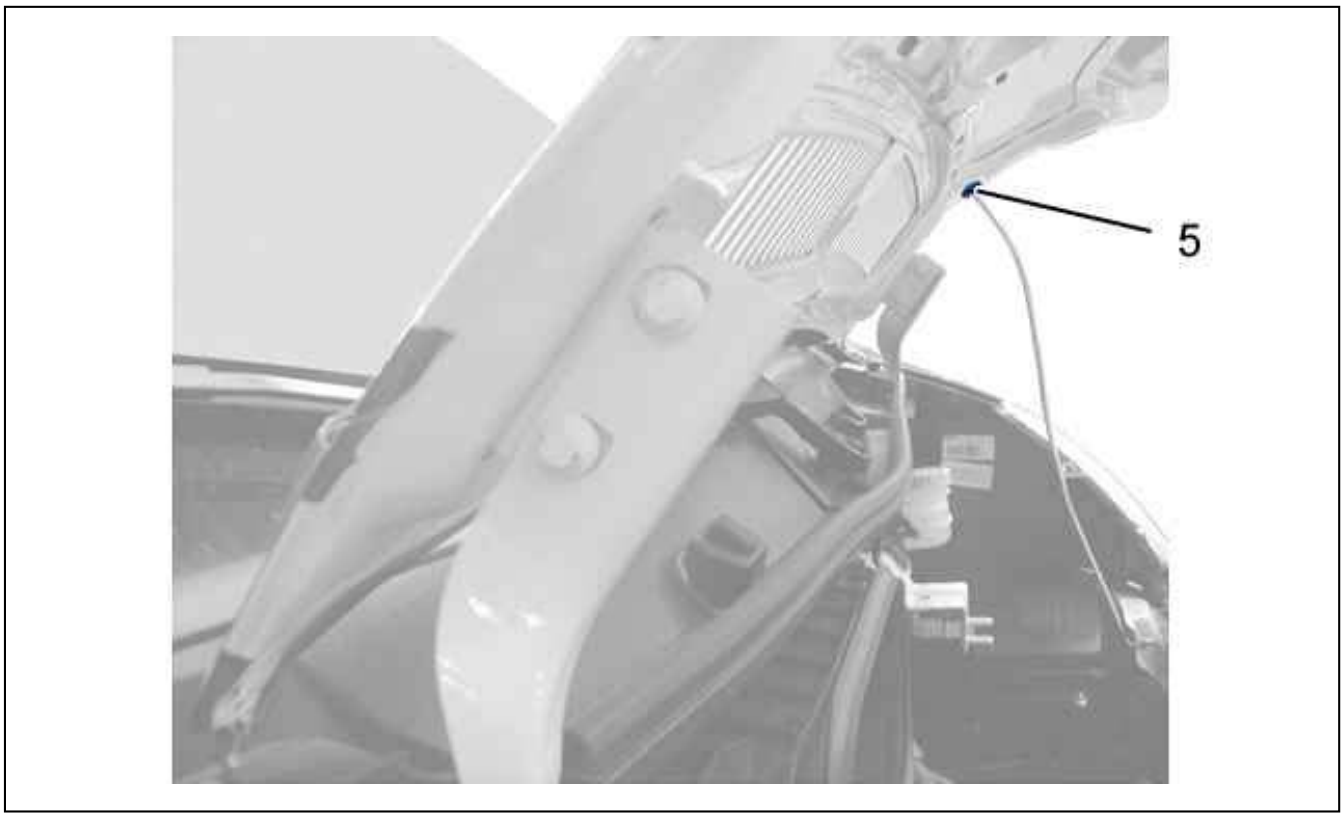

Figure : C4AP1M5D

Detach the bonnet strut support (5).

3. Refitting

Proceed in the reverse order to removal.

REMOVING - REFITTING : BONNET

1. Removing

N.B. : Two people are required to perform the following operation.

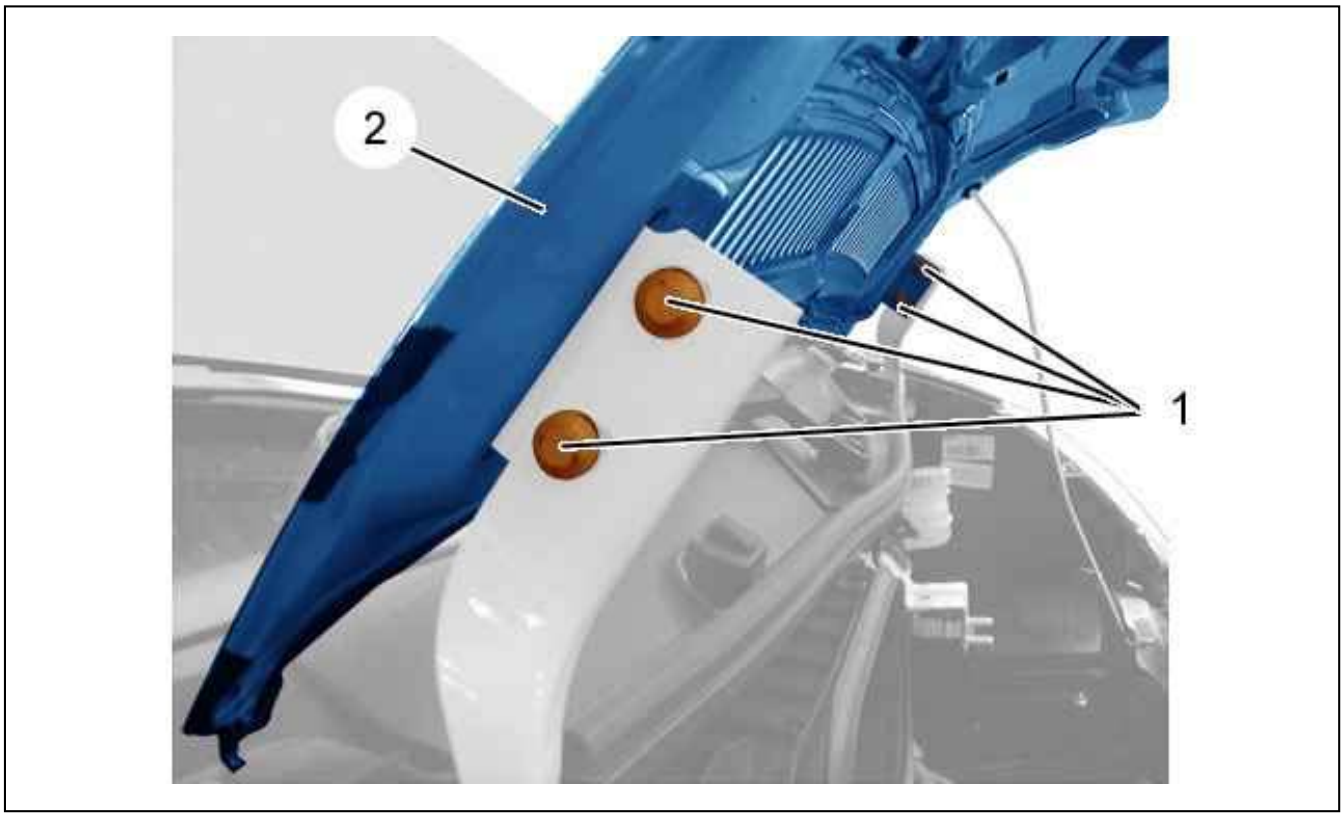

Figure : C4AP1LYD

Remove :

- The bolts (1)
- The bonnet (2)

2. Refitting

Proceed in the reverse order to removal.
Tighten the bolts (1) to 0,8 m.daN .
Adjust the bonnet’s fits and clearances (see the relevant operation).

N.B. : If necessary Adjust the bonnet release lever (see the relevant operation).

REMOVING - REFITTING : FRONT WING

1. Preliminary operations

ESSENTIAL : Deactivate the pneumatic suspension before lifting the vehicle (2 or 4 post lift, workshop jack or vehicle jack).

Remove :

- The front splash shield (see the relevant operation)
- The front bumper (see the relevant operation)
- Headlamp (see the relevant operation)

2. Removing

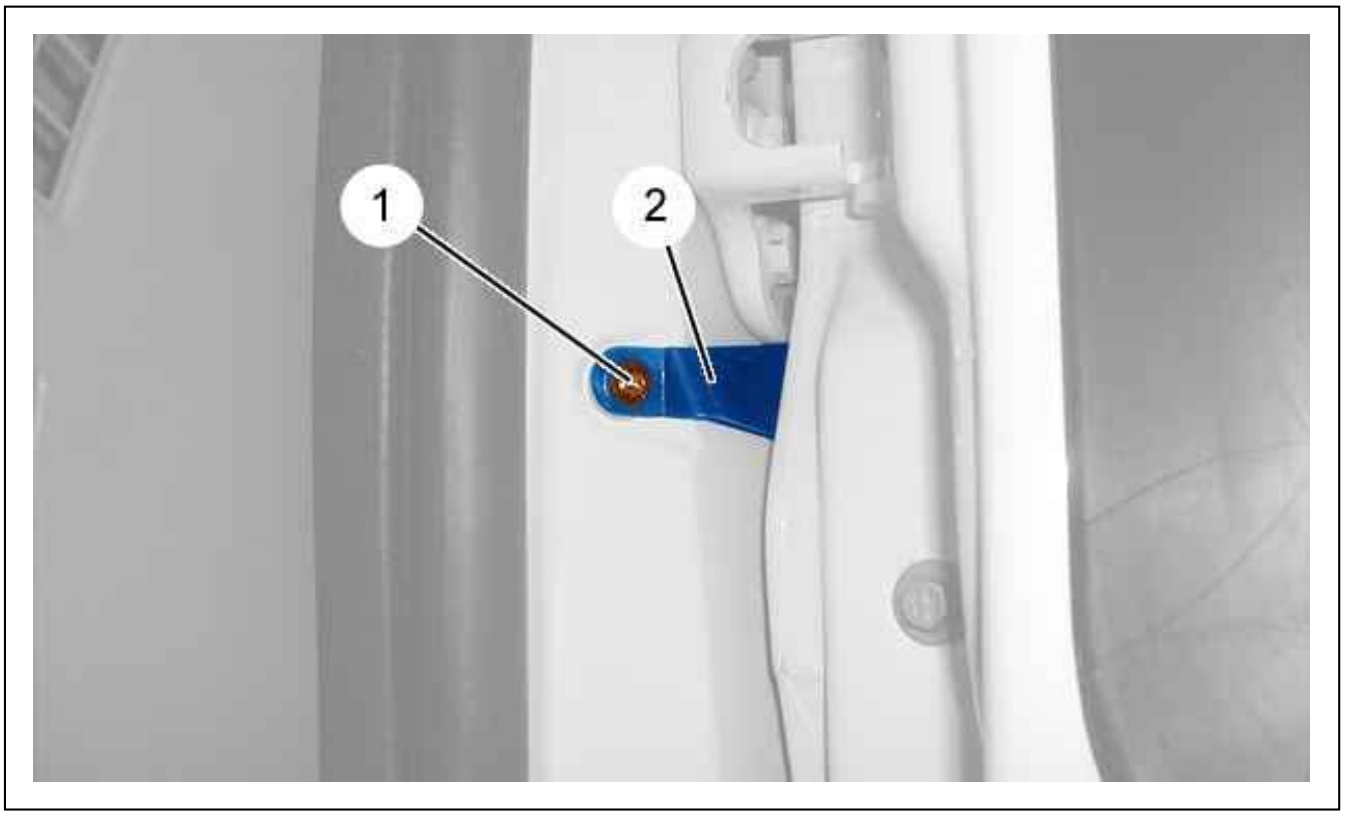

Figure : C4CP1JTD

Open the front door.
Remove the screw (1) from the front wing embellisher (2).

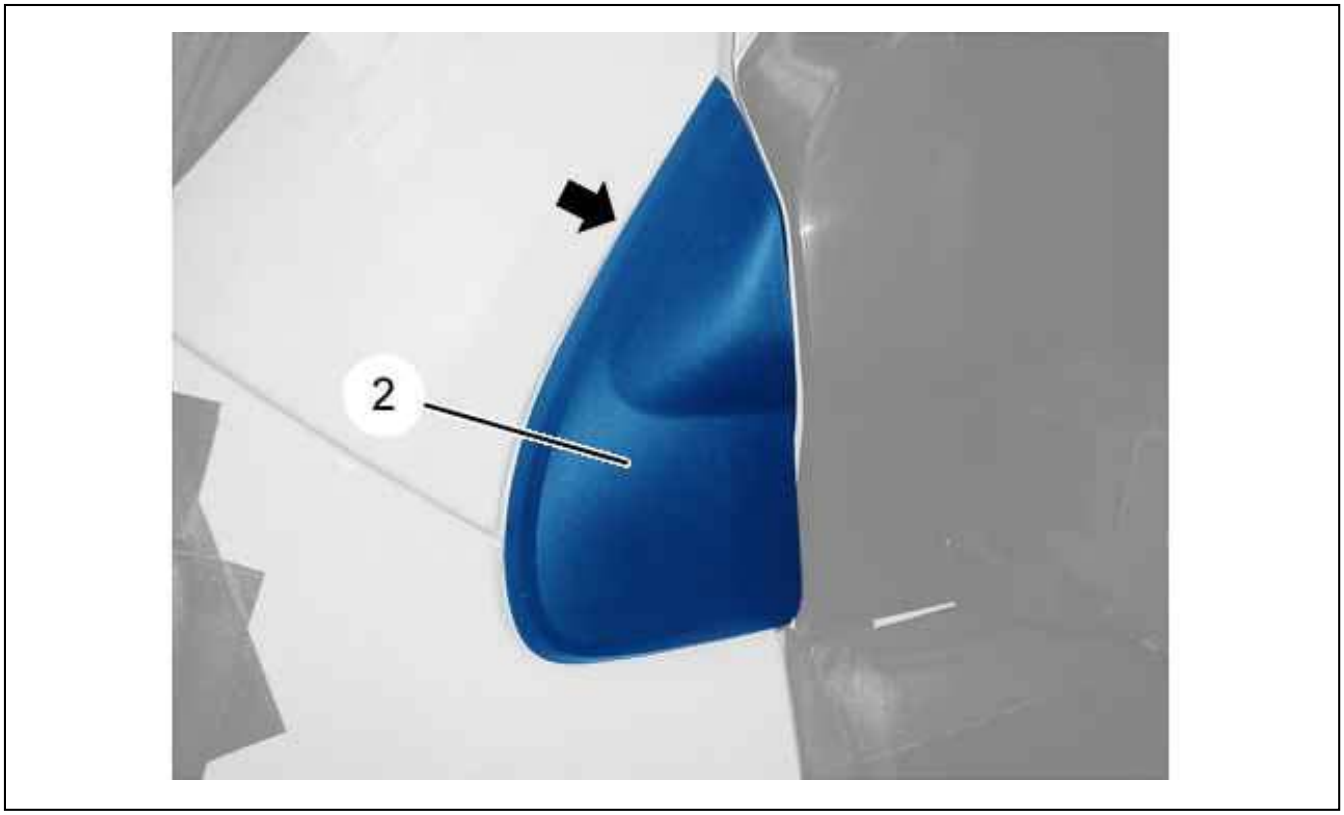

Figure : C4CP1JUD

Unclip and remove the embellisher (2) (following the arrow).

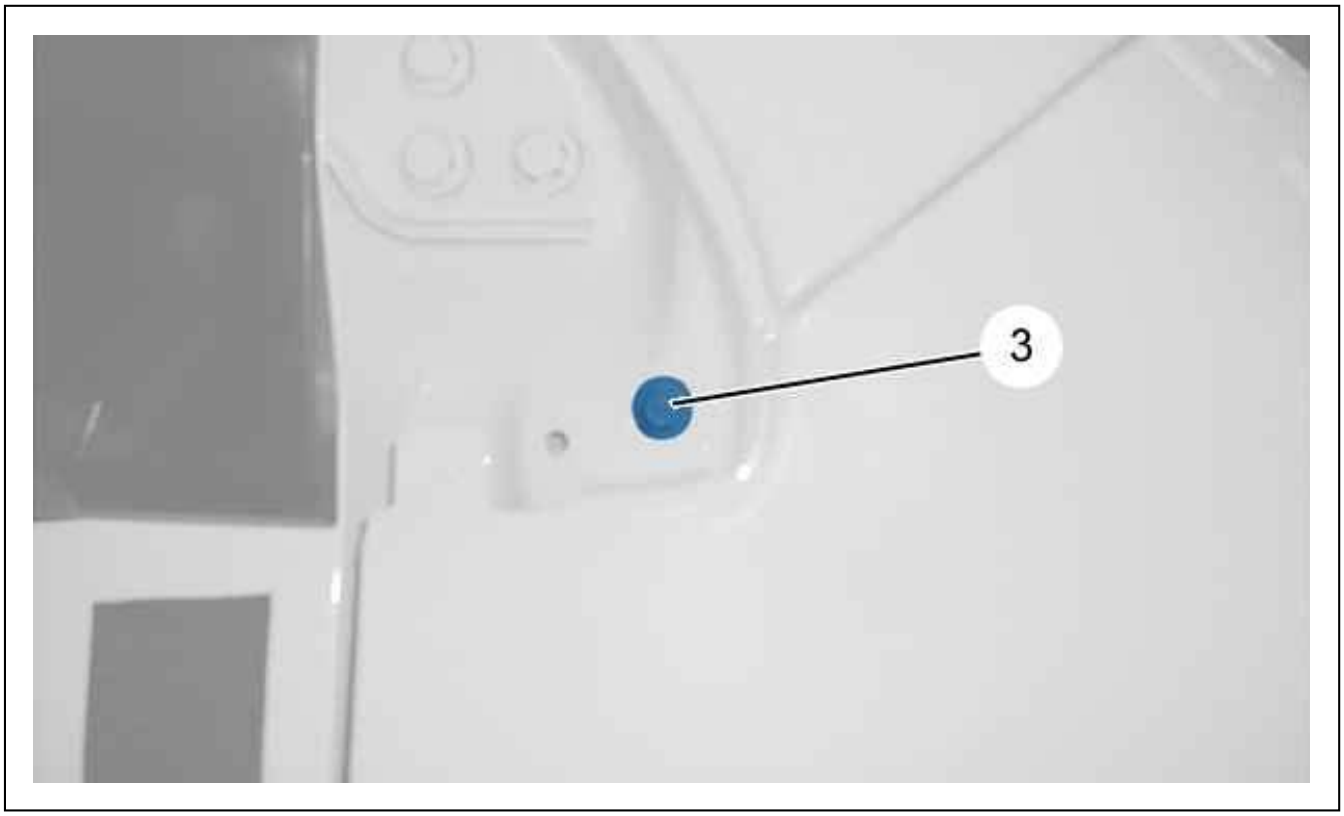

Figure : C4CP1JVD

Remove bolts (3).

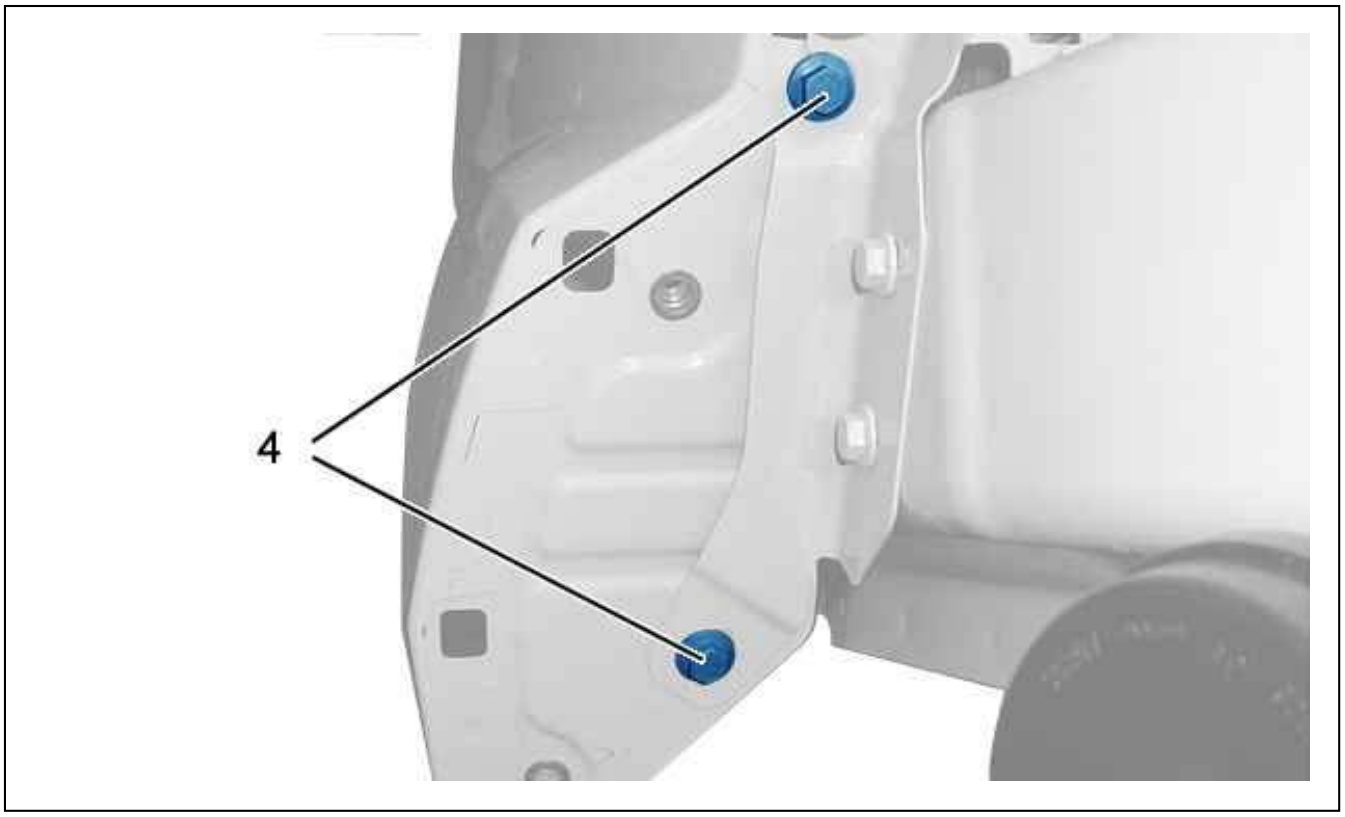

Figure : C4CP1JWD

Remove the bolts (4).

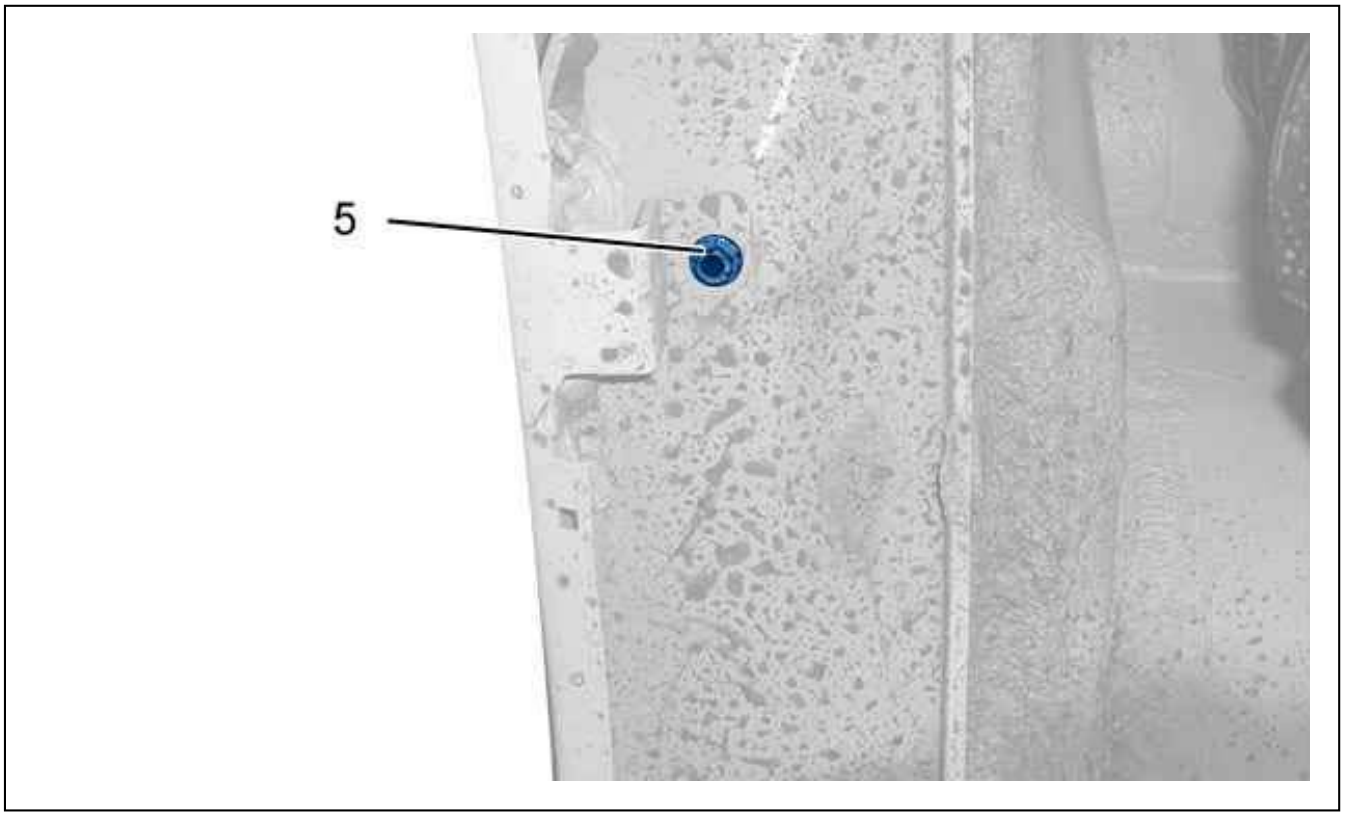

Figure : C4CP1JXD

Remove bolts (5).

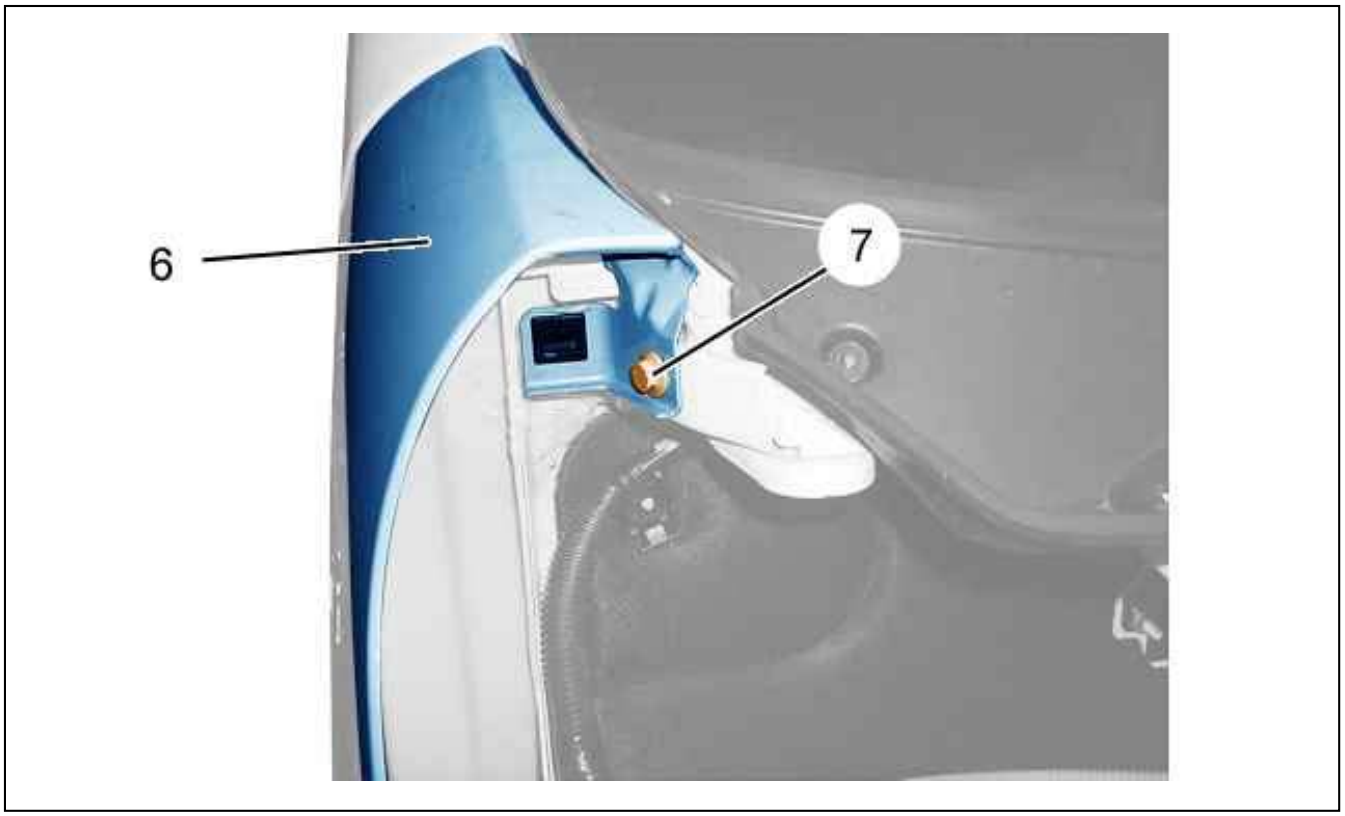

Figure : C4CP1JYD

Remove bolts (7).
Remove the front wing (6).

3. Refitting

Proceed in the reverse order to removal.
Adjust the flush fitting (see the relevant operation).

REMOVING - REFITTING : ENGINE BONNET DIVIDER

1. Preliminary operations

Remove :

- The bonnet (see the relevant operation)
- The headlamp upper cover (see the relevant operation)

2. Removing

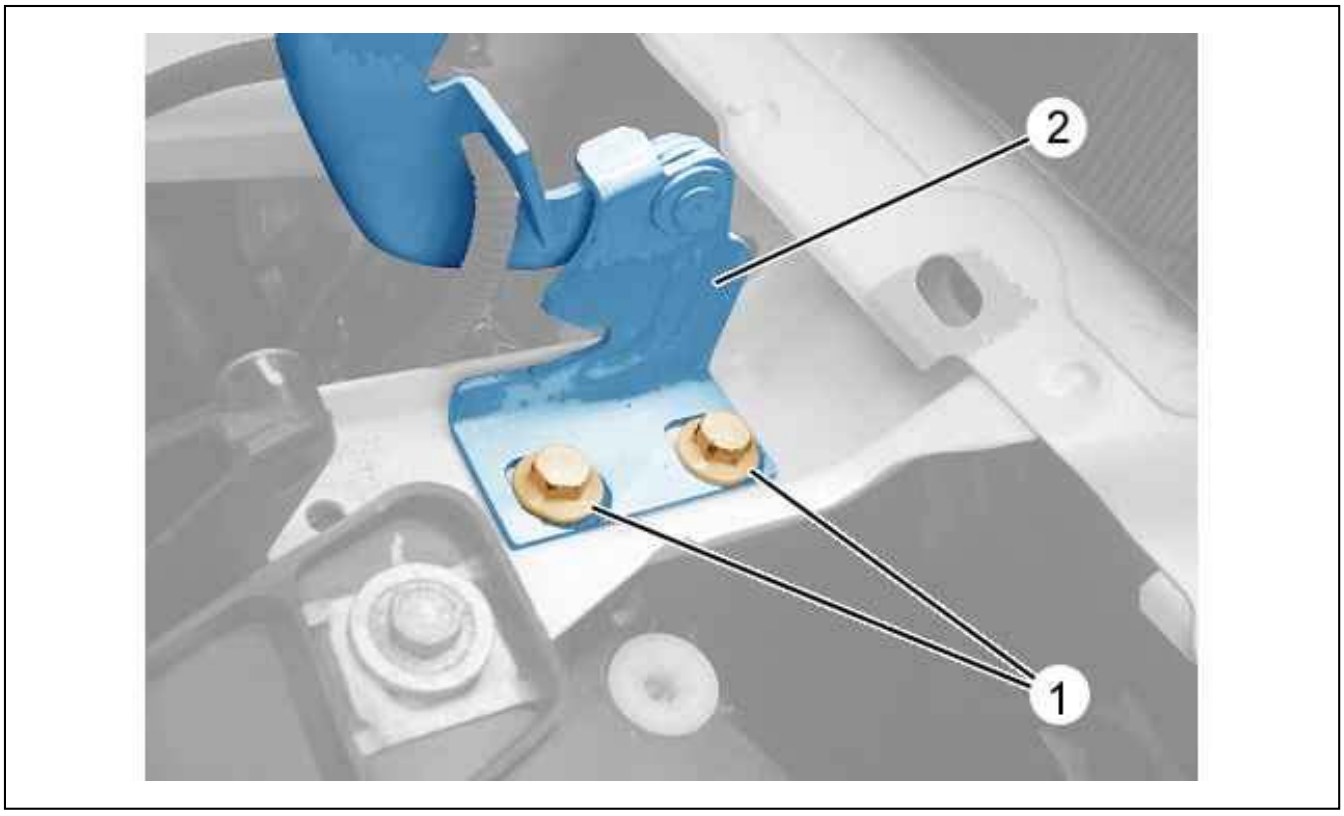

Figure : C4AP1MCD

Remove :

- The bolts (1)
- The bonnet divider (2)

Proceed in identical fashion for the other side.

3. Refitting

Proceed in the reverse order to removal.
Tighten the bolts (1) to 0,8 ± 0,08 daN.m.
Adjust the bonnet's fits and clearances (see the relevant operation).

N.B. : Adjust the bonnet and/or the bonnet opening mechanism If necessary (see the relevant operations).

Check all the equipment works.

REMOVING - REFITTING : BONNET OPENING CONTROL

1. Removing

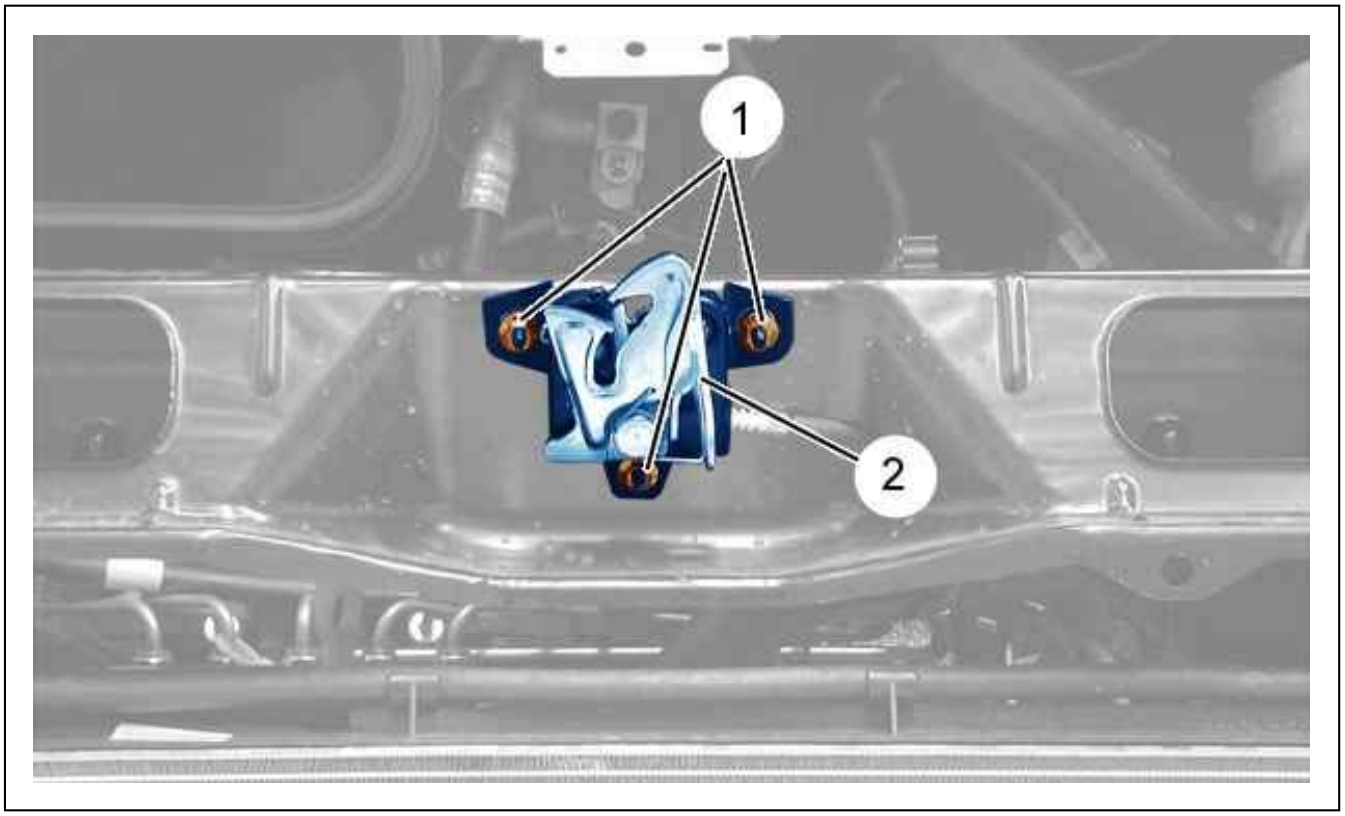

Figure : C5DP05ZD

Remove the bolts (1).
Detach the bonnet lock (2).

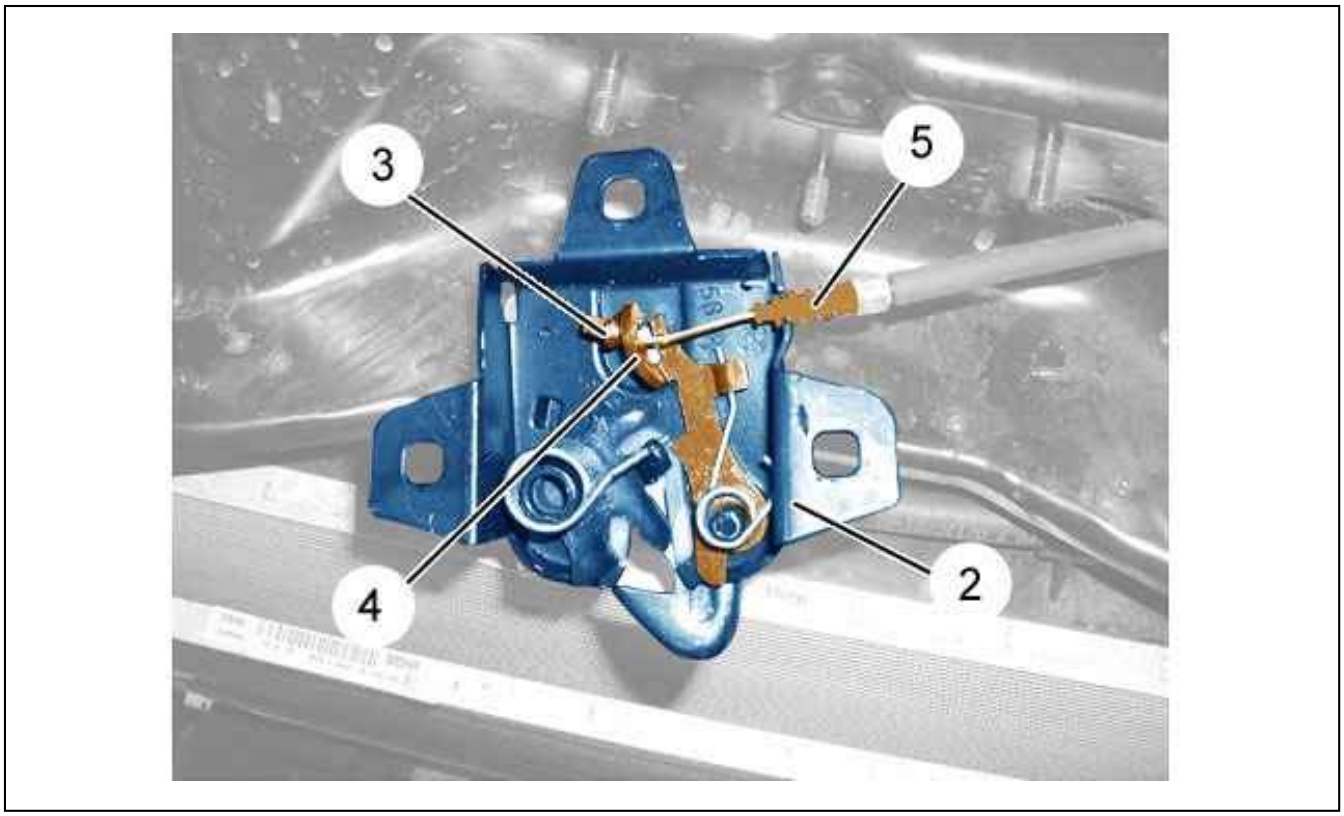

Figure : C5DP060D

Detach :

- The cable (3) from its anchorage (4)
- The cable guide (5)

Remove the bonnet lock (2).

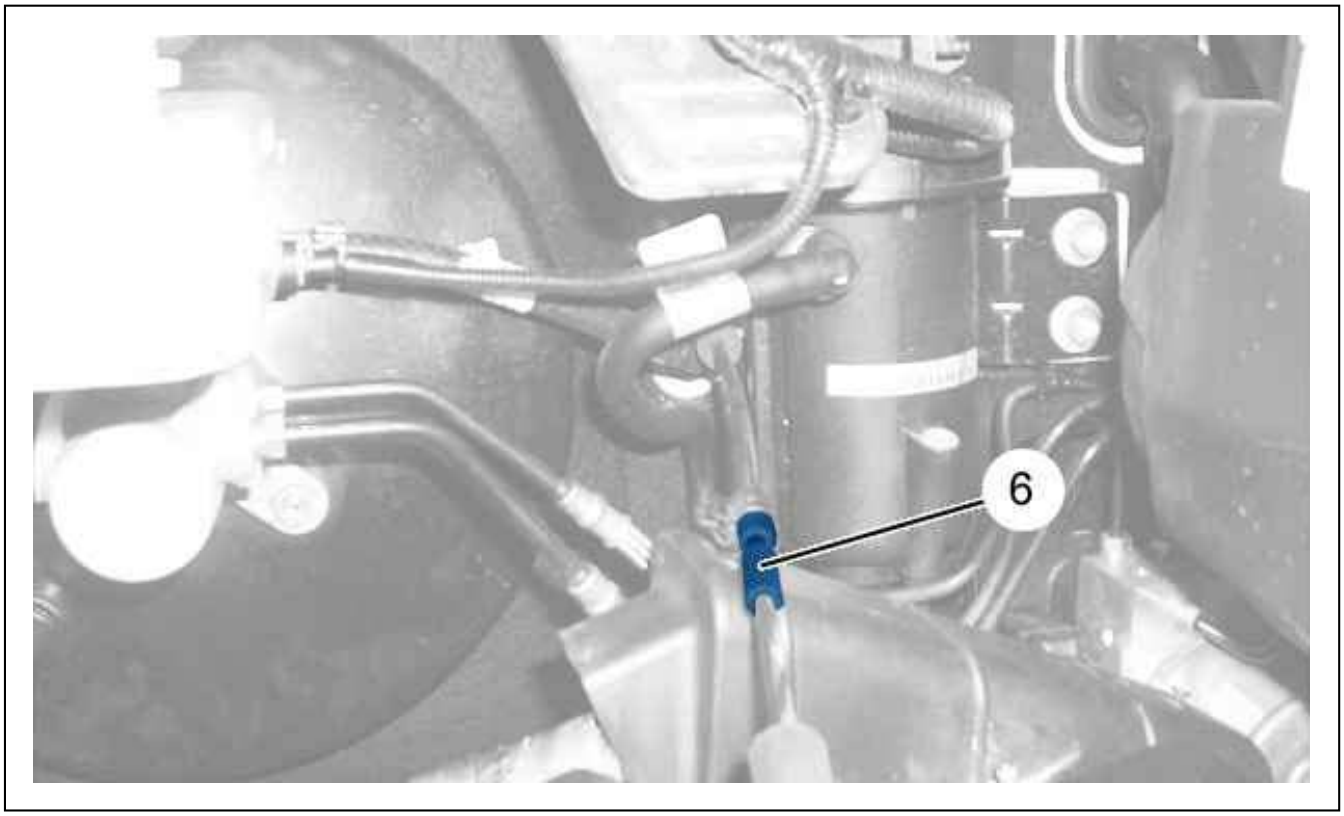

Figure : B1BPRPCD

Unclip then detach the cable sleeve (6).

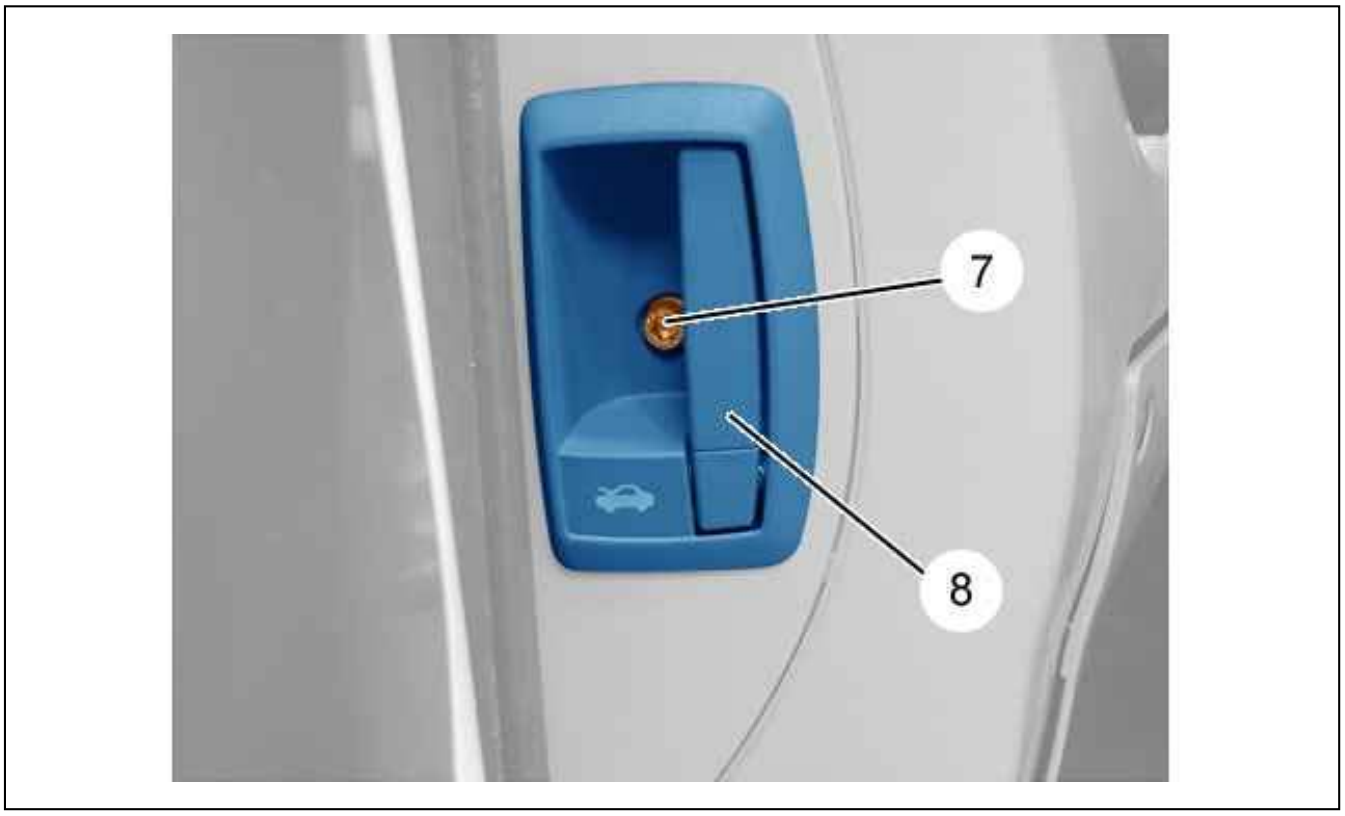

Figure : C5FP0XLD

Open the door.
Remove bolts (7).
Detach the bonnet opening control (8).

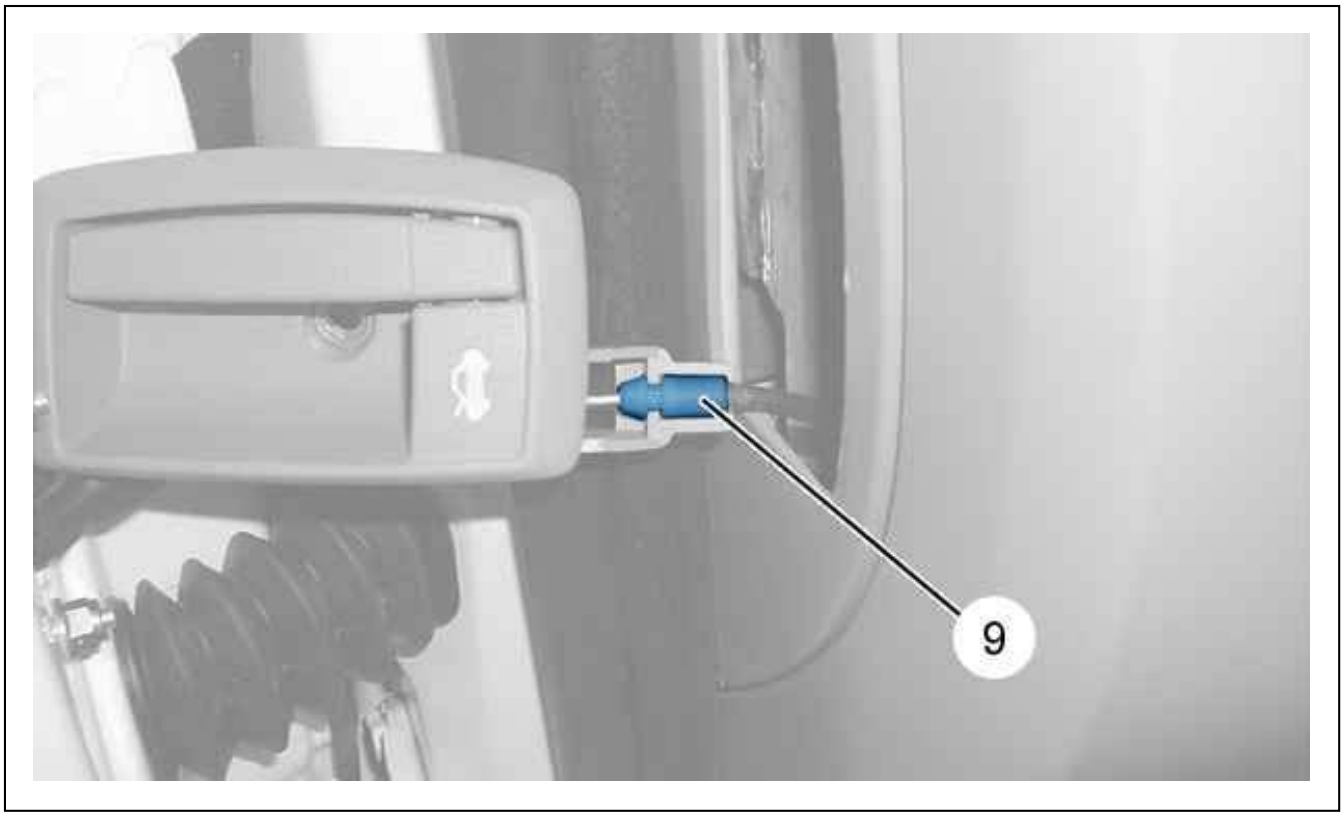

Figure : C5FP0XMD

Unclip the cable guide (9).

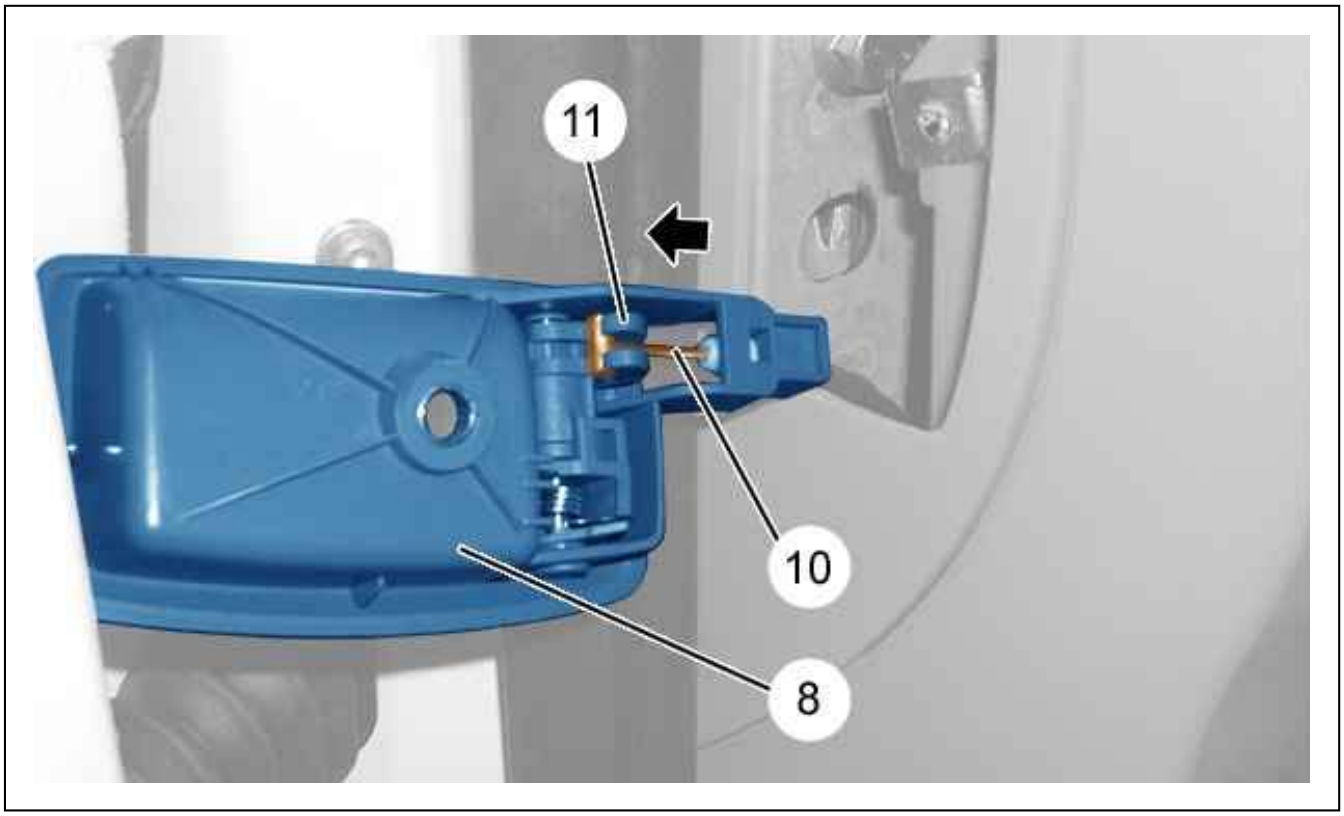

Figure : C5FP0XND

Detach the cable (10) from its anchorage (11) (following the arrow).
Remove :

- The bonnet release (8)
- The cable (10)

2. Refitting

Proceed in the reverse order to removal.
Adjust the bonnet’s fits and clearances (see the relevant operation).

N.B. : Adjust the position of the bonnet If necessary (see the relevant operation).

Check all the equipment works.

REPLACEMENT : FRONT HALF-PANEL ASSEMBLY

ESSENTIAL : All of the stripped surfaces must be protected by means of the approved electrolytic rezincing process (see the relevant operations).

ESSENTIAL : Observe the elementary rules of hygiene and safety (wear a face mask to protect against fumes and vapour - work in a well ventilated space).

1. Additional operations

Disconnect the battery.
Replacement :

- Front wing
- Front bumper
- Headlamp
- Front panel

Removing - Refitting :

- Fuse box (left side)
- Screen wash reservoir (right hand side)
- expansion bottle (right hand side)

Detrim-retrim : Front wheel arch.
Release the wiring harnesses.

2. Identification of the replacement part

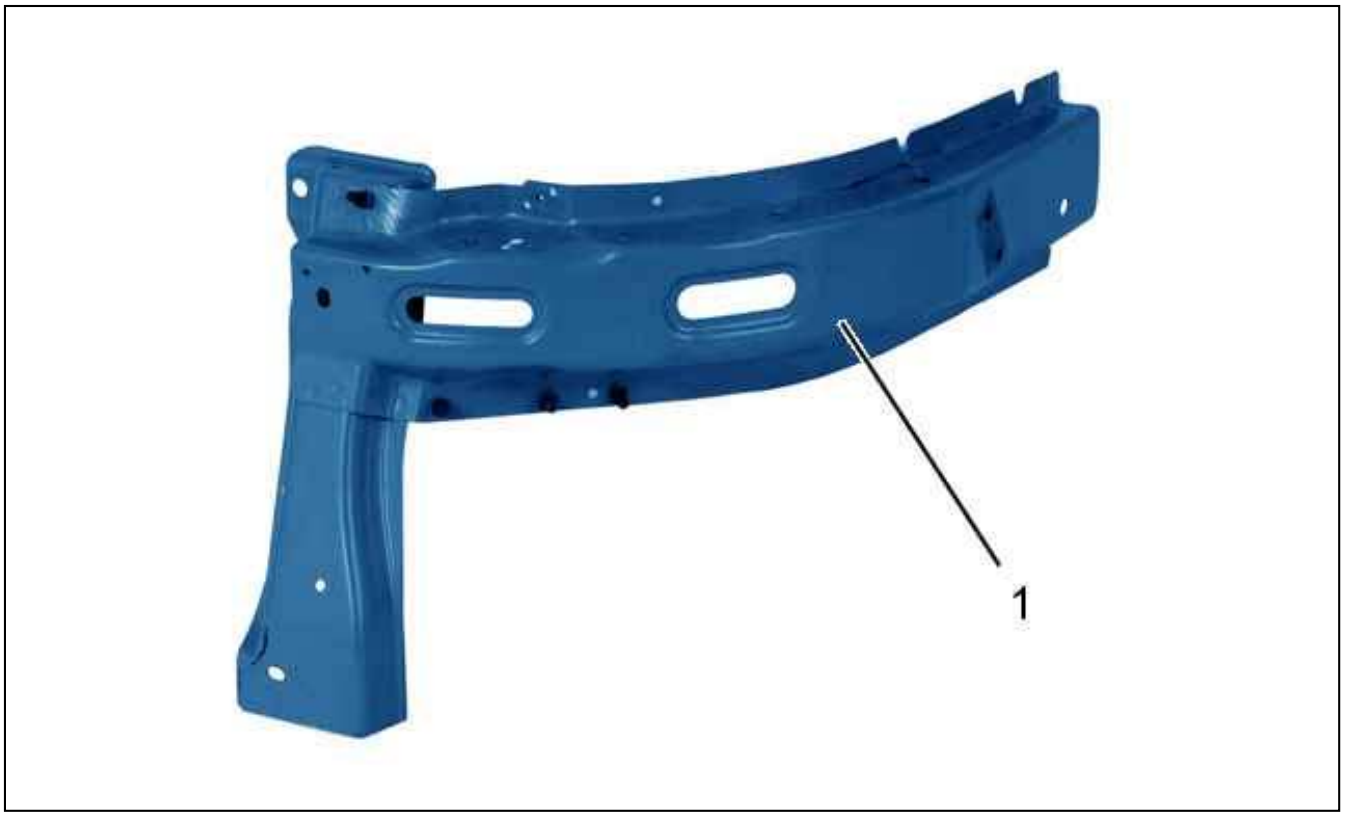

Figure : C4AP1LSD

(1) Front half-panel assembly.

3. Composition

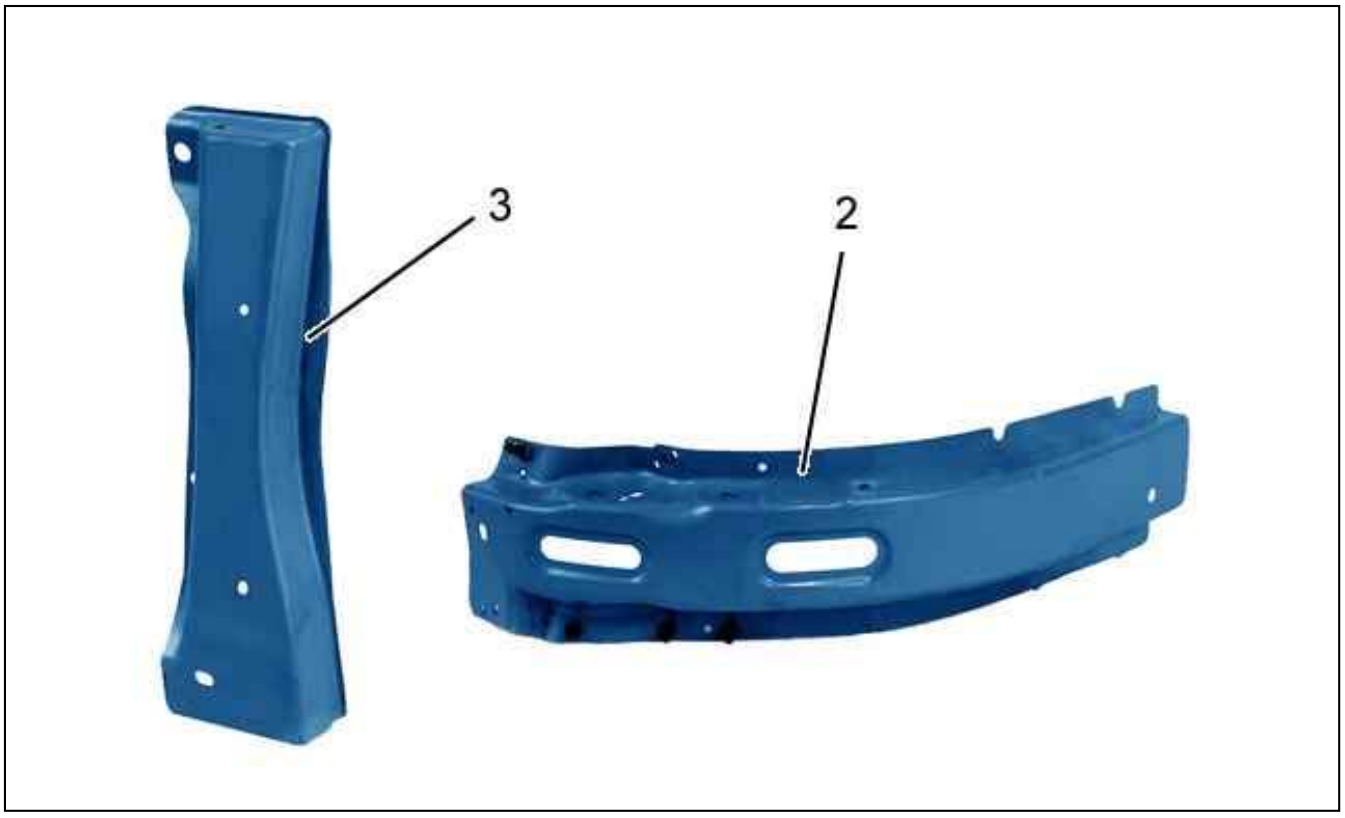

Figure : C4AP1LTD

(2) Upper engine compartment front half panel.
(3) Front half panel .

4. Cutting out

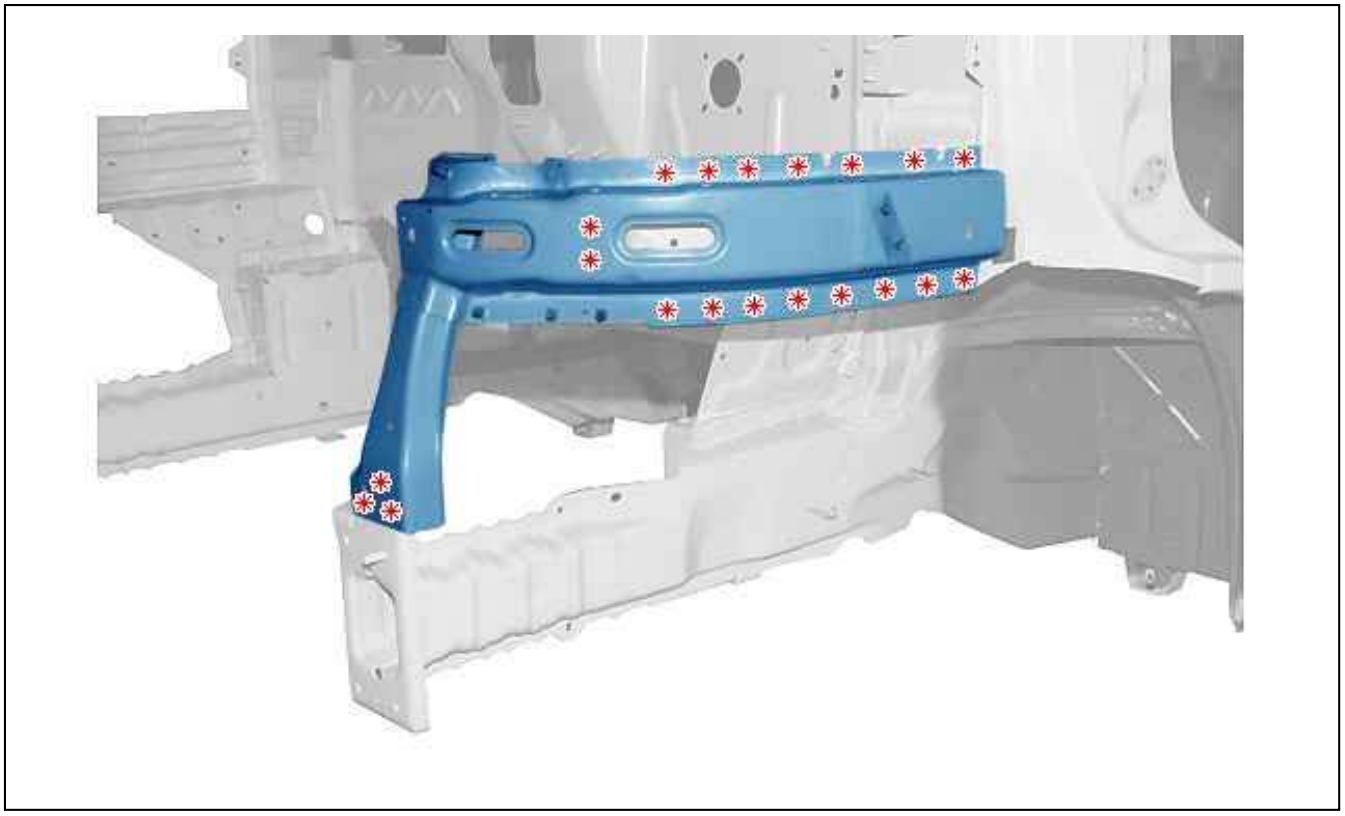

Figure : C4AP1LUD

Cut out by milling out the spot welds.
Remove the half front panel (assembled).

5. Bodywork cleaning and preparation

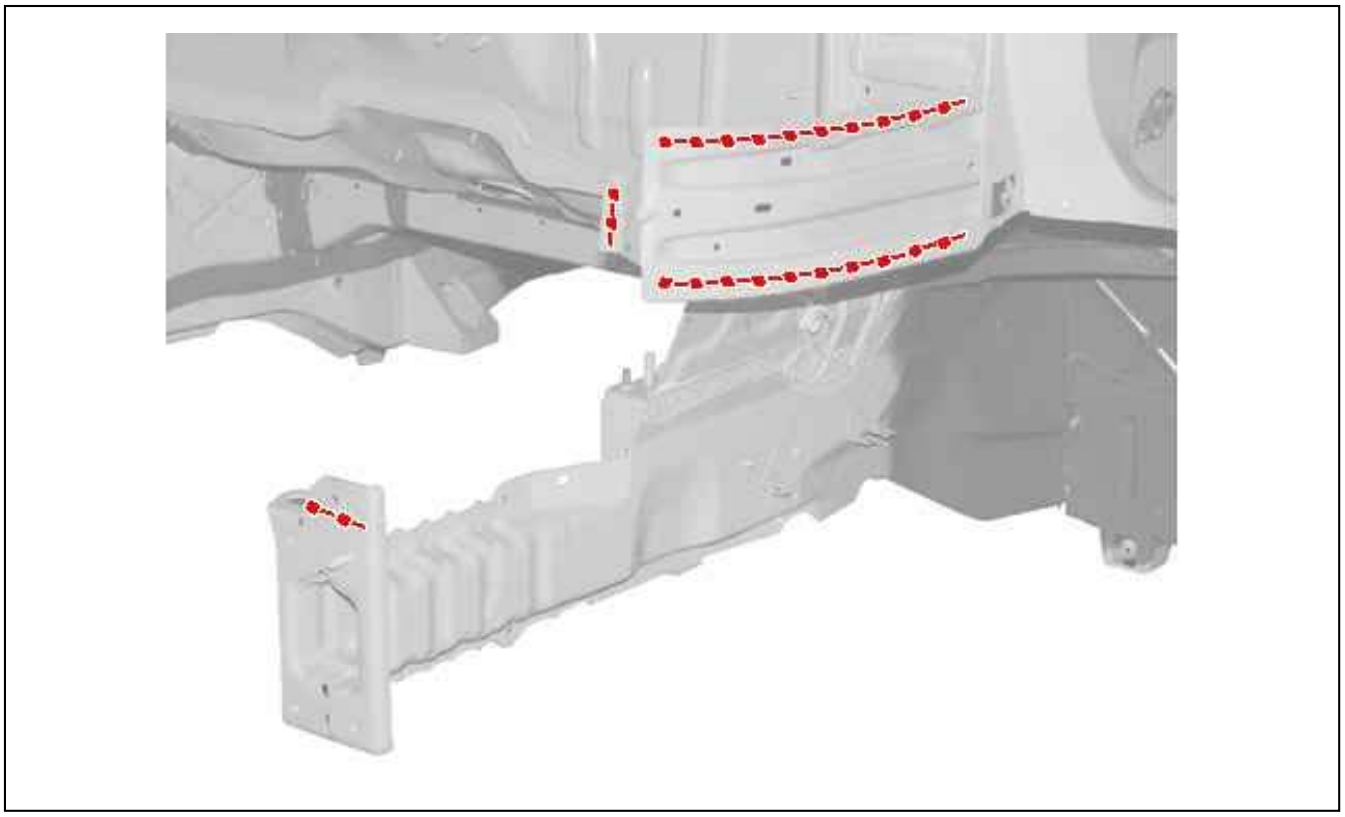

Figure : C4AP1LVD

Prepare the mating edges and protect them using a weldable primer .

6. Adjustment

Present the elements, allowing for adjustment.
Check the fits and clearances.
Use the approved checking and measuring equipment.

7. Welding

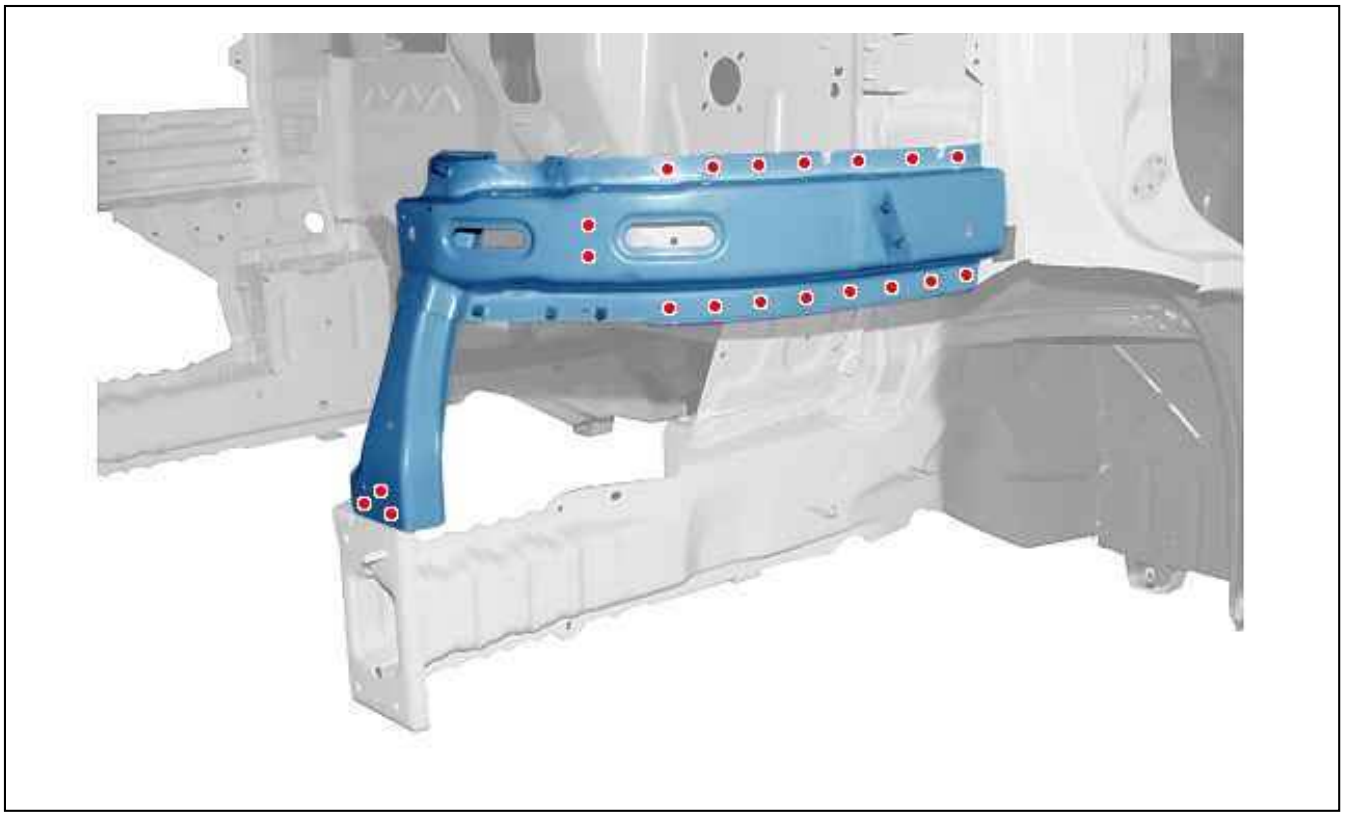

Figure : C4AP1LWD

Weld with electric spot welds.

8. Protection

Paint then spray into the hollow sections, product index C5, in the repair zone (see the relevant operation).

9. Reinitialisation

ESSENTIAL : Perform the operations to be carried out following reconnection of the battery.

REPLACEMENT : PARTIAL FRONT HALF-PANEL INNER PANEL

ESSENTIAL : All of the stripped surfaces must be protected by means of the approved electrolytic rezincing process (see the relevant operation).

ESSENTIAL : Observe the elementary rules of hygiene and safety (wear a face mask to protect against fumes and vapour - work in a well ventilated space).

1. Additional operation

Disconnect the battery.
Replace the front half-panel assembly (see the relevant operation).
Release the wiring harnesses.

2. Identification of the replacement parts

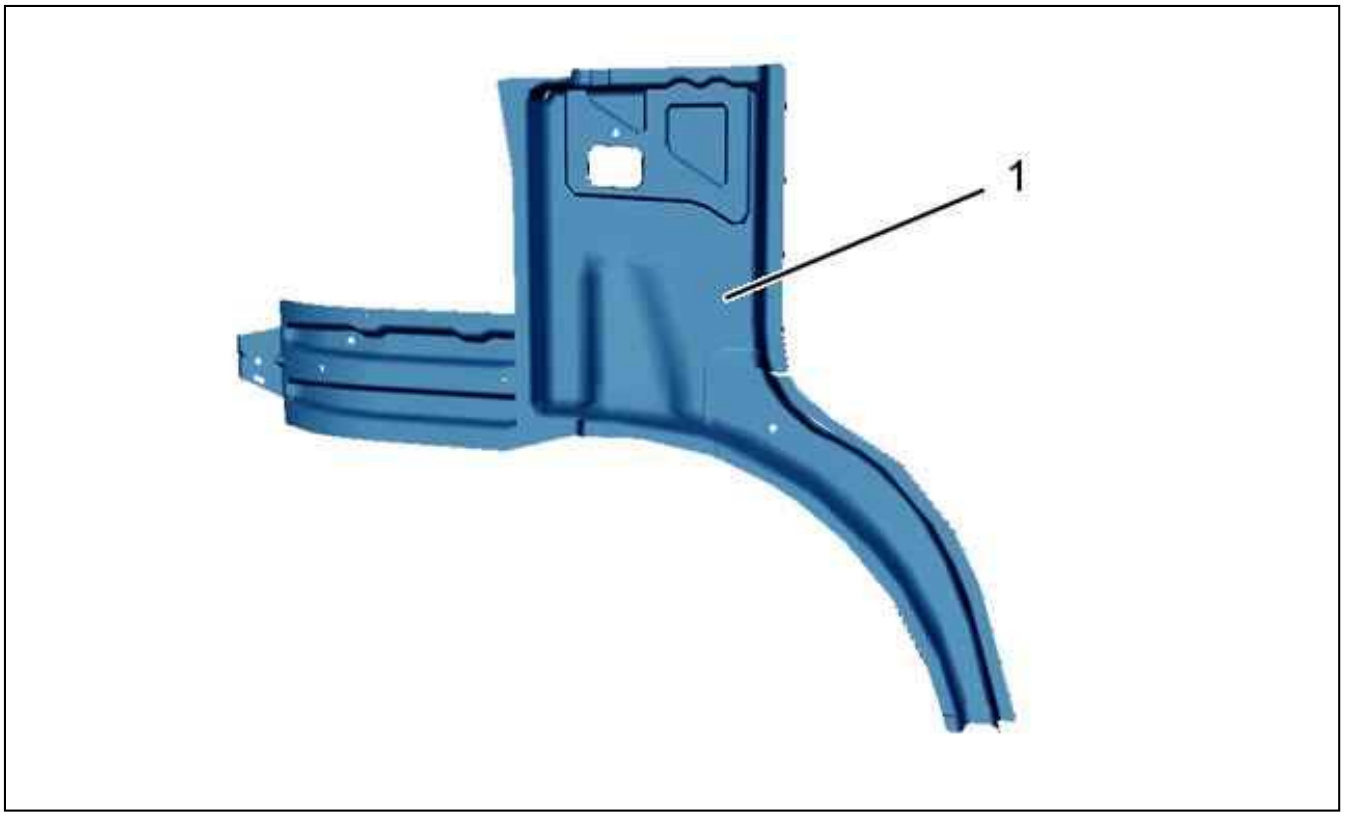

Figure : C4AP1NXD

Figure 1.
Front wing inner panel assembly (1).

3. Composition of replacement parts

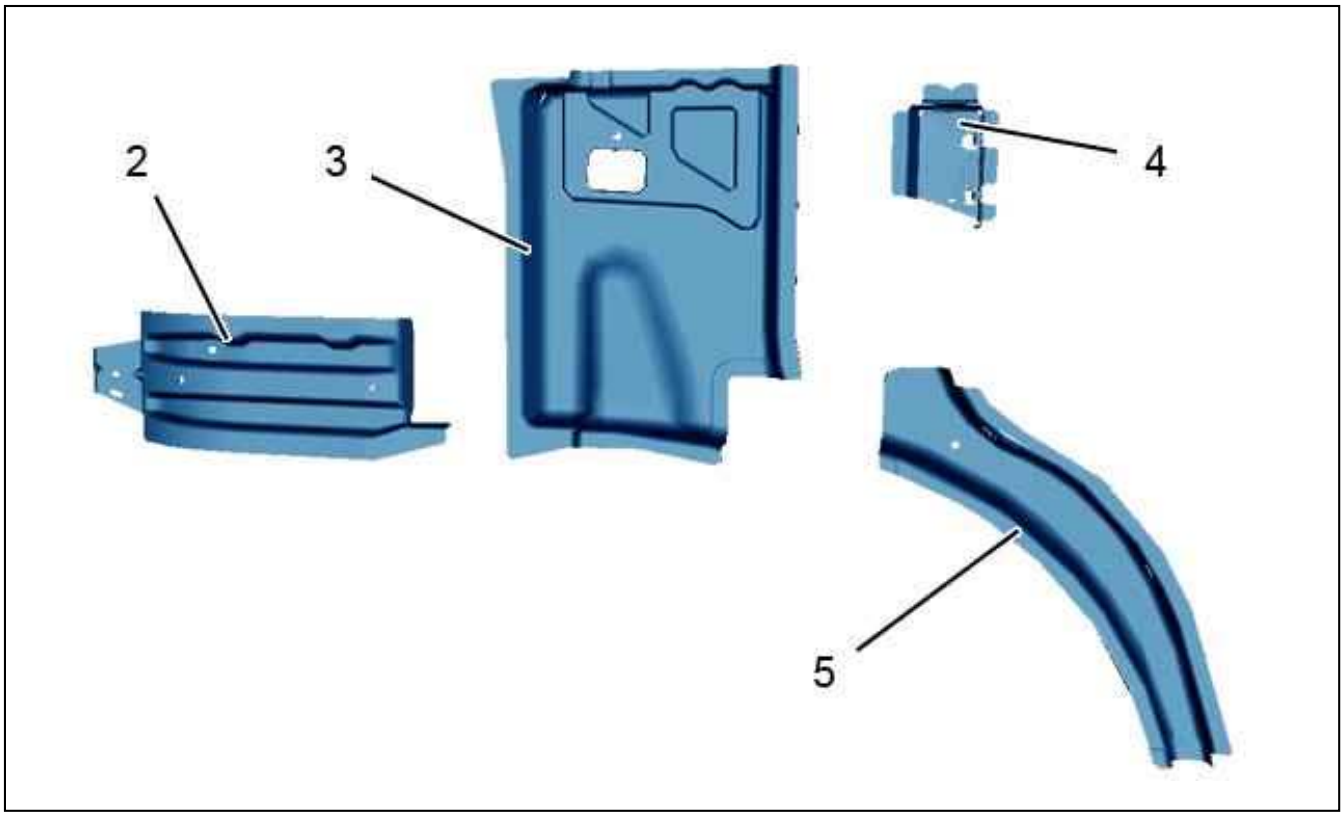

Figure : C4AP1NYD

Figure 2.
Front wing half-panel inner panel (2).
Front wing inner panel (3).
Dashboard crossmember fixing (4).
Door arch inner panel (5).

4. Replacement part preparation

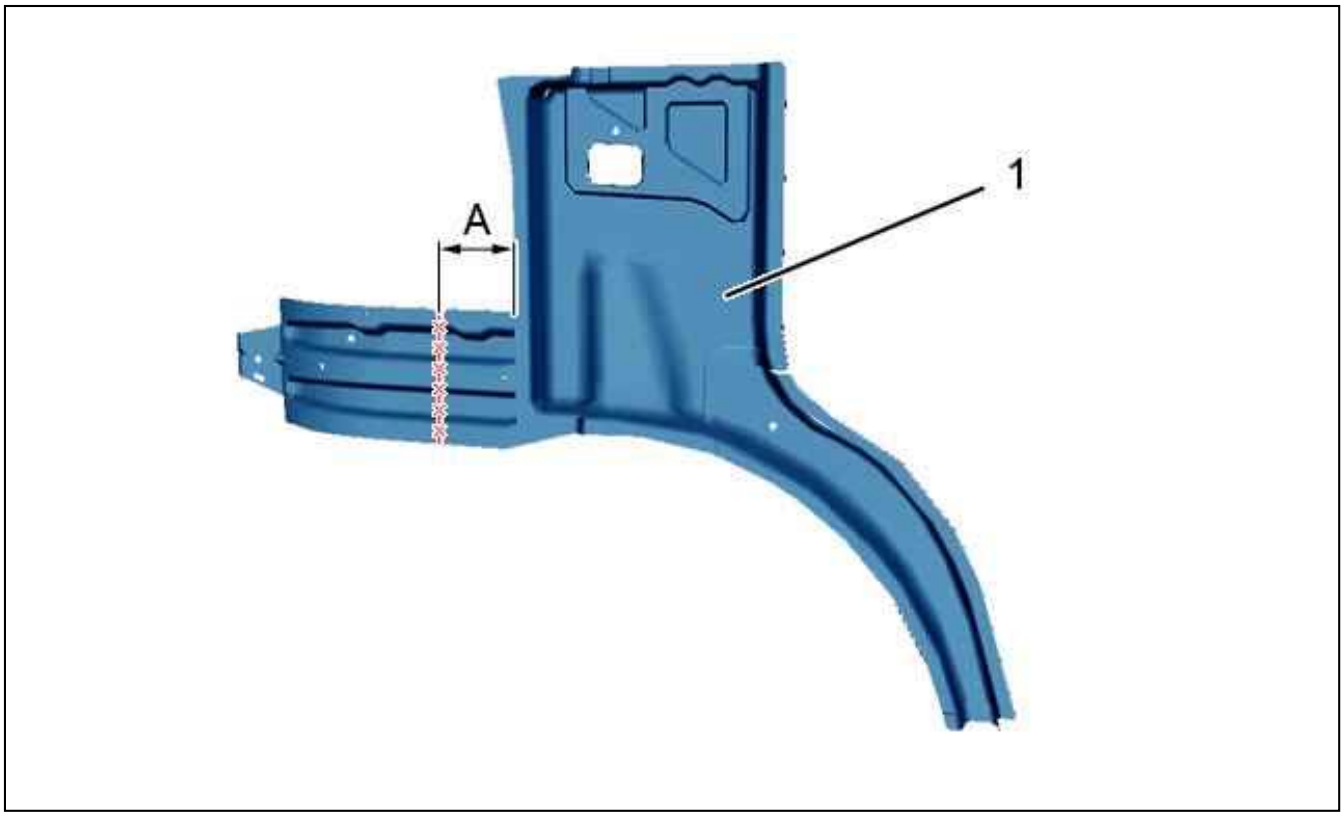

Figure : C4AP1NZD

Figure 3.
Front wing inner panel assembly (1).
Mark then cut (final cutting).
Prepare the mating edges .

5. Cutting out

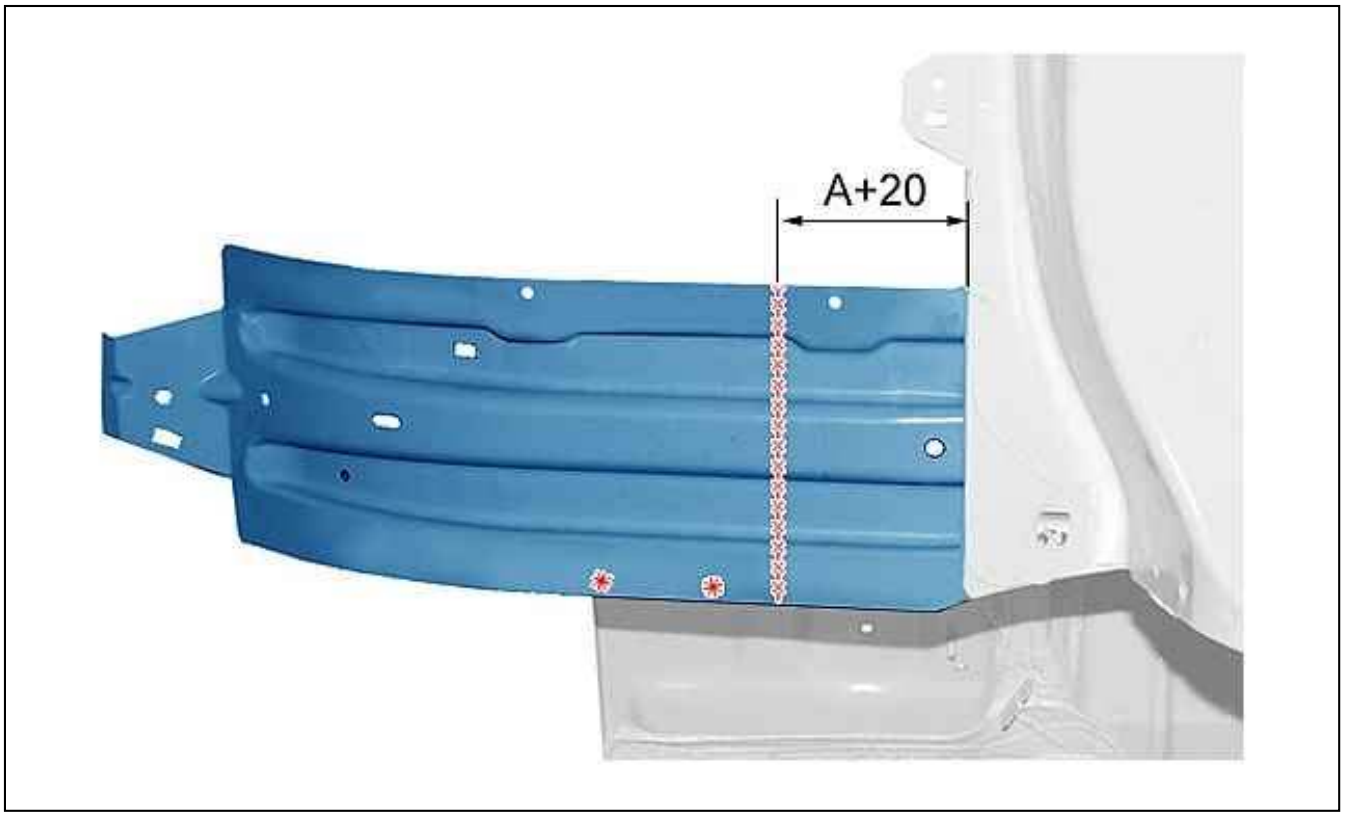

Figure : C4AP1MWD

Figure 4.
Cut out the spot welds .
Mark then cut (preliminary cut).
Remove the partial front half-panel inner panel.

6. Bodywork cleaning and preparation

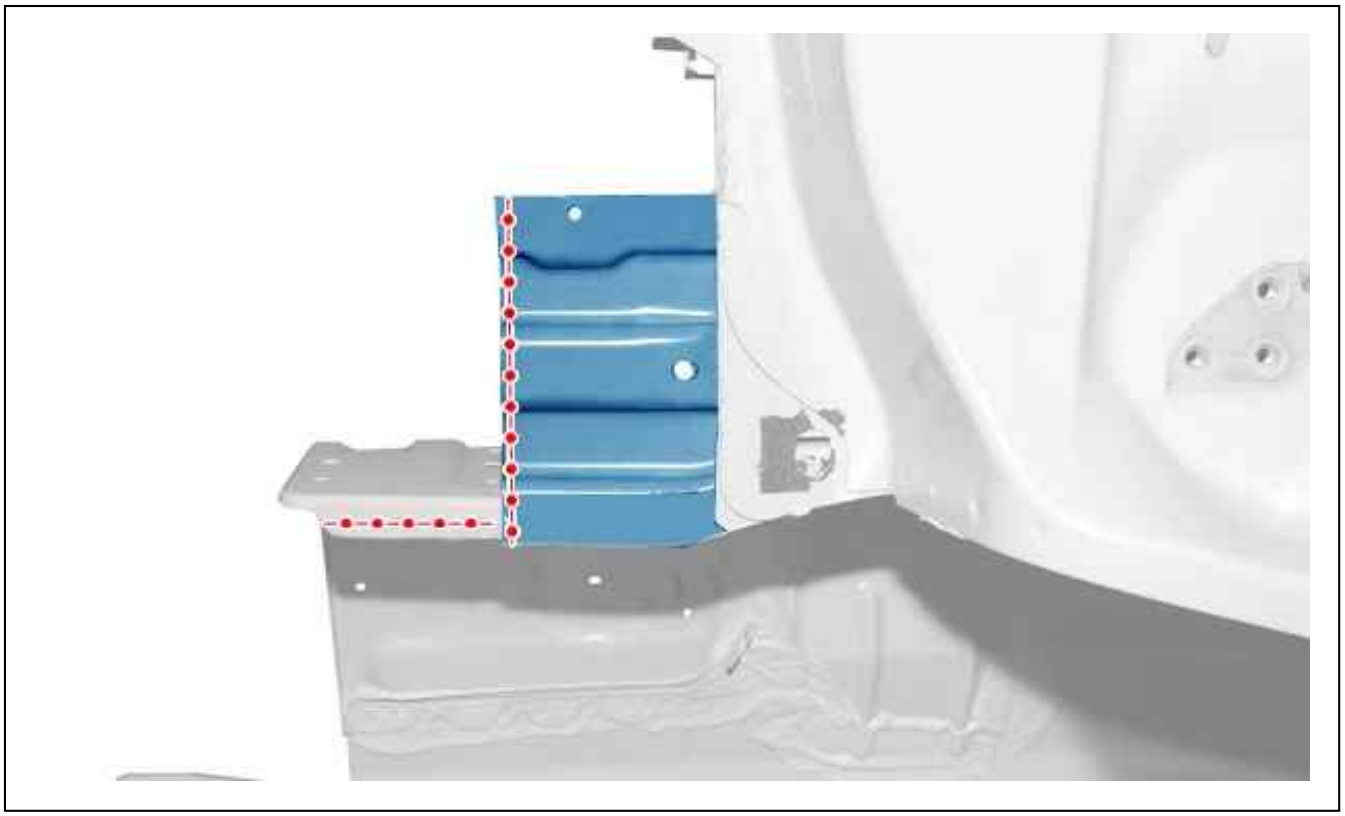

Figure : C4AP1MXD

Figure 5.
Prepare the mating edges .
Align the mating edges and protect them with a weldable primer.

7. Adjustment

Present the component for adjustment.
Check the fits and clearances (see the relevant operation).

8. Welding

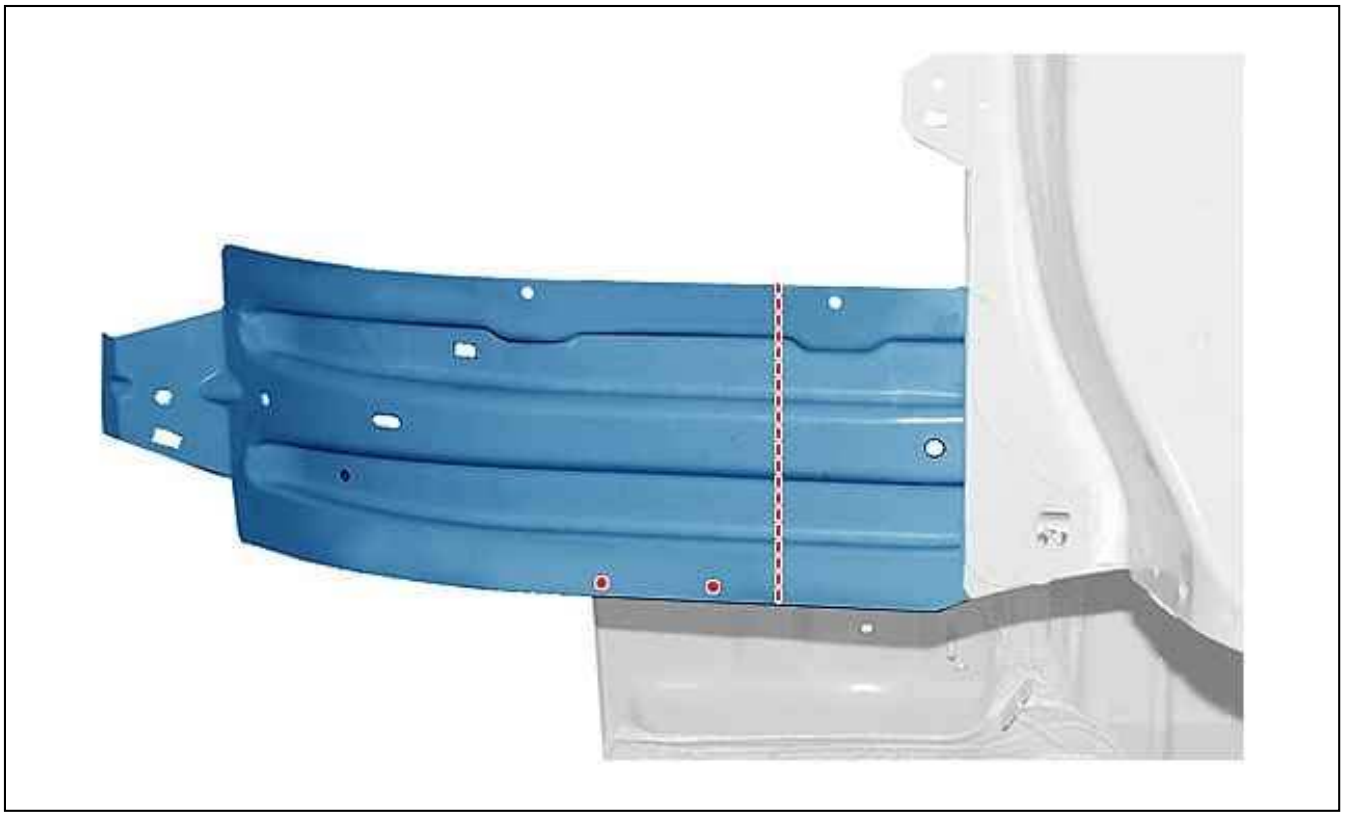

Figure : C4AP1MYD

Figure 6.
Weld using successive beads (MIG or MAG).
Grind the welds.
Weld with electric spot welds.

9. Reinitialisation

Reconnect the battery.

ESSENTIAL : Perform the operations to be carried out following reconnection of the battery.

REPLACEMENT : FRONT PANEL SUPPORT

ESSENTIAL : All of the stripped surfaces must be protected by means of the approved electrolytic rezincing process (see the relevant operation).

ESSENTIAL : Observe the elementary rules of hygiene and safety (wear a face mask to protect against fumes and vapour - work in a well ventilated space).

1. Additional operations

Disconnect the battery.
Replacement :

- Front half-panel assembly (see the relevant operation)
- Front bumper crossmember

Release the wiring harnesses.

2. Identification of the replacement parts



Figure : C4AP1N0D

Front panel support.

3. Cutting out

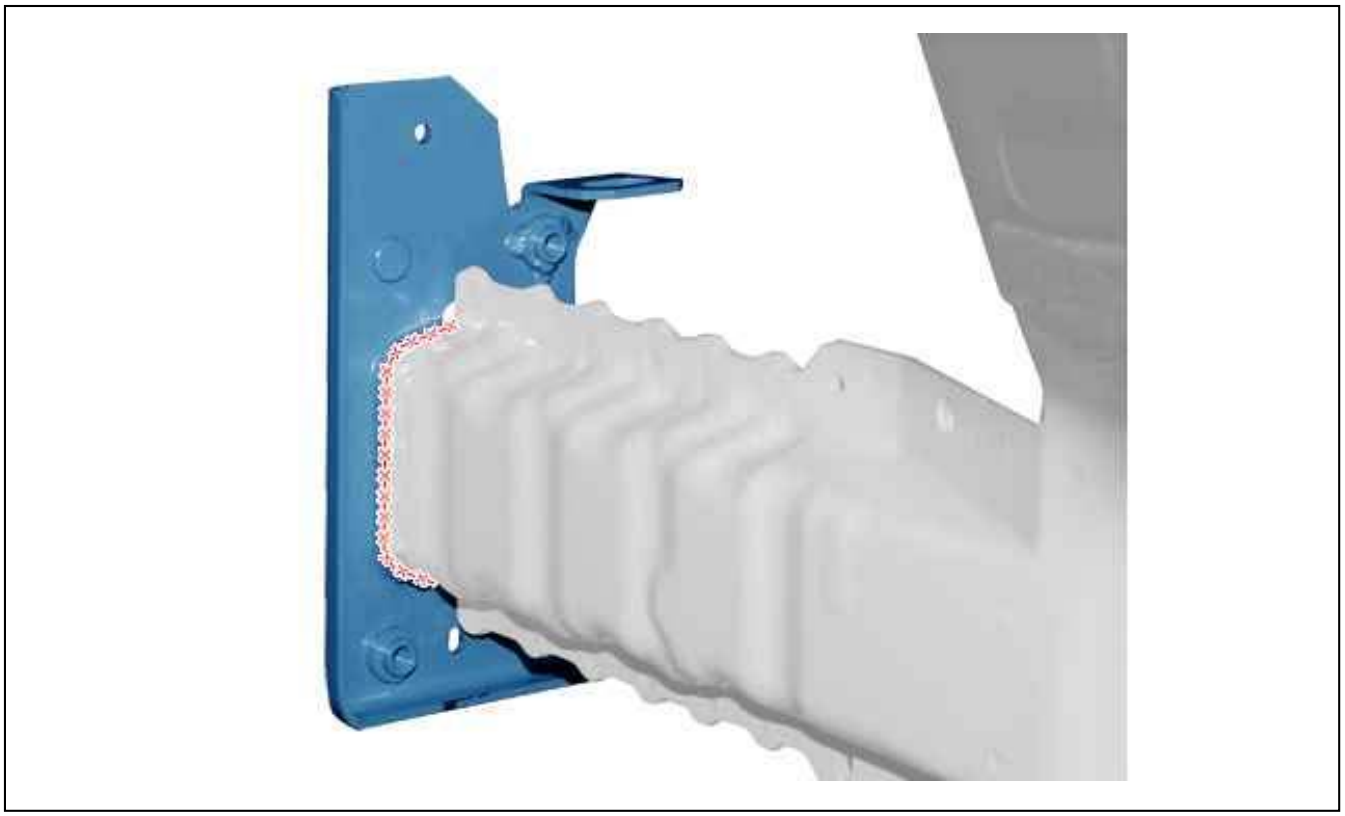

Figure : C4AP1N1D

Cut out the weld bead (on each side).
Remove the front panel support.

4. Bodywork cleaning and preparation

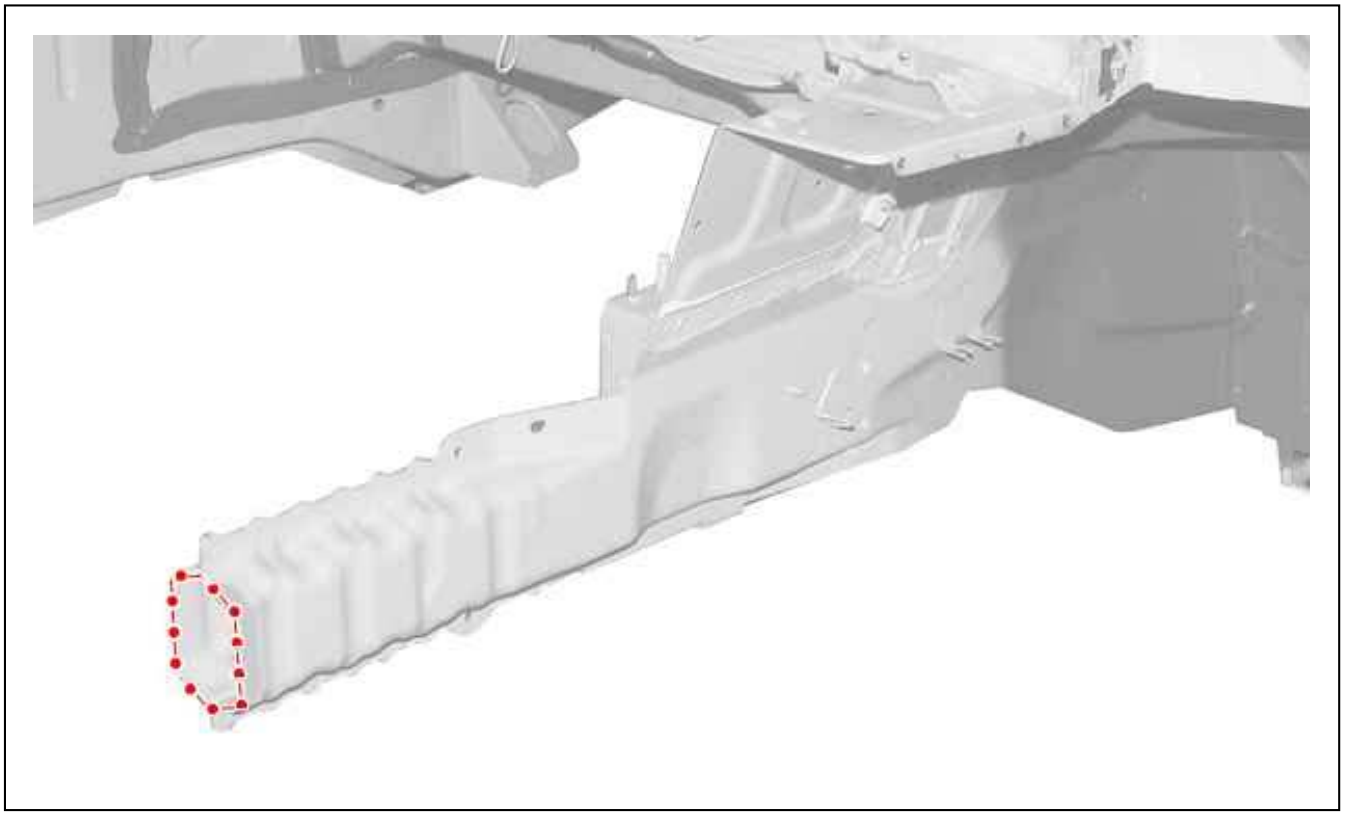

Figure : C4AP1N2D

Prepare the mating edges .
Align the mating edges and protect them with a weldable primer.

5. Adjustment

Present the component for adjustment.
Check the fits and clearances (see the relevant operation).
Use the approved checking and measuring equipment.

6. Welding

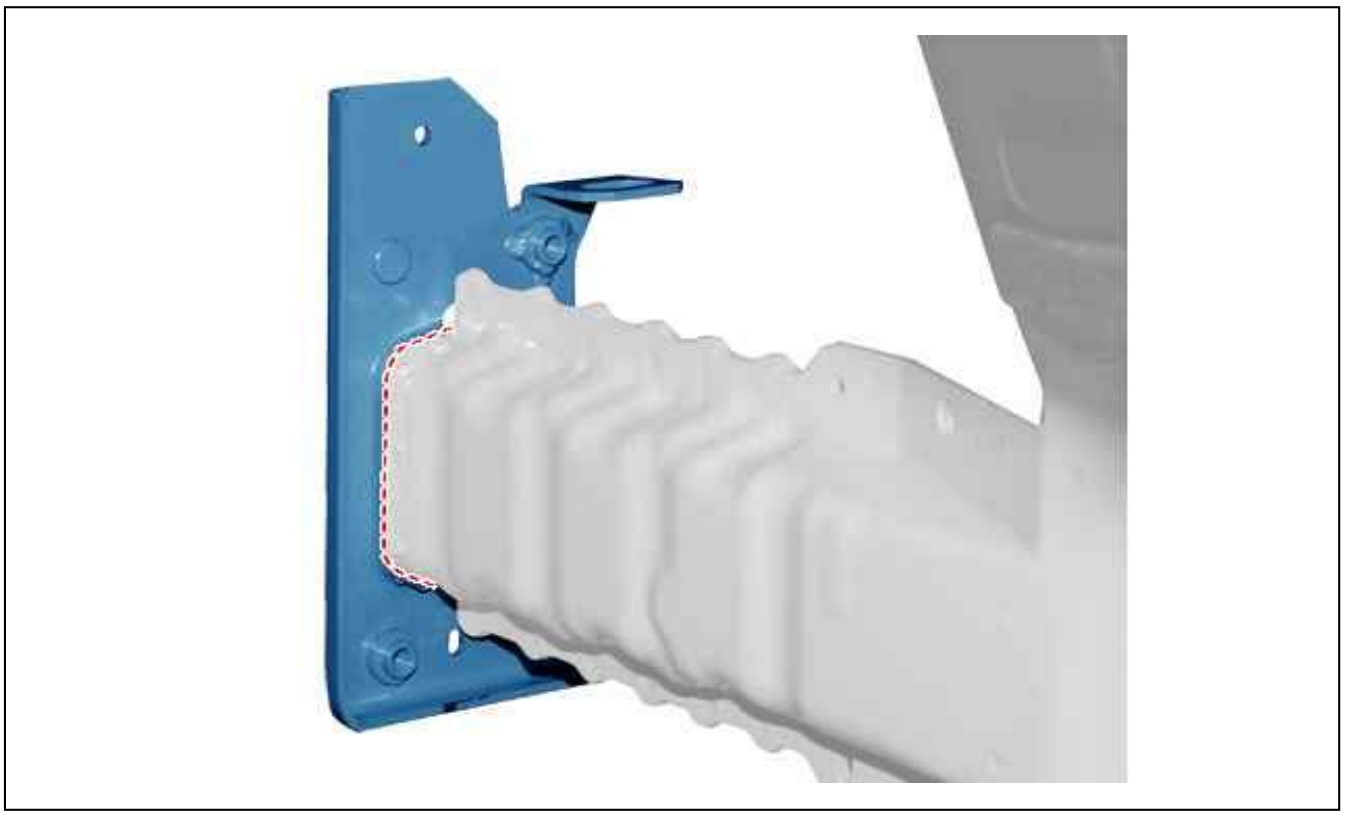

Figure : C4AP1N3D

Stitch weld (on each side).

7. Reinitialisation

Reconnect the battery.

ESSENTIAL : Perform the operations to be carried out following reconnection of the battery.

REPLACEMENT : FRONT WHEELARCH STRENGTHENER

ESSENTIAL : All of the stripped surfaces must be protected by means of the approved electrolytic rezincing process . (see the relevant operation).

ESSENTIAL : Observe the elementary rules of hygiene and safety (wear a face mask to protect against fumes and vapour - work in a well ventilated space).

1. Additional operations

Disconnect the battery.
Replacement :

- Front wheel arch (see the relevant operation)
- Front longeron core (see the relevant operation)

Release the wiring harnesses.

2. Identification of the replacement parts

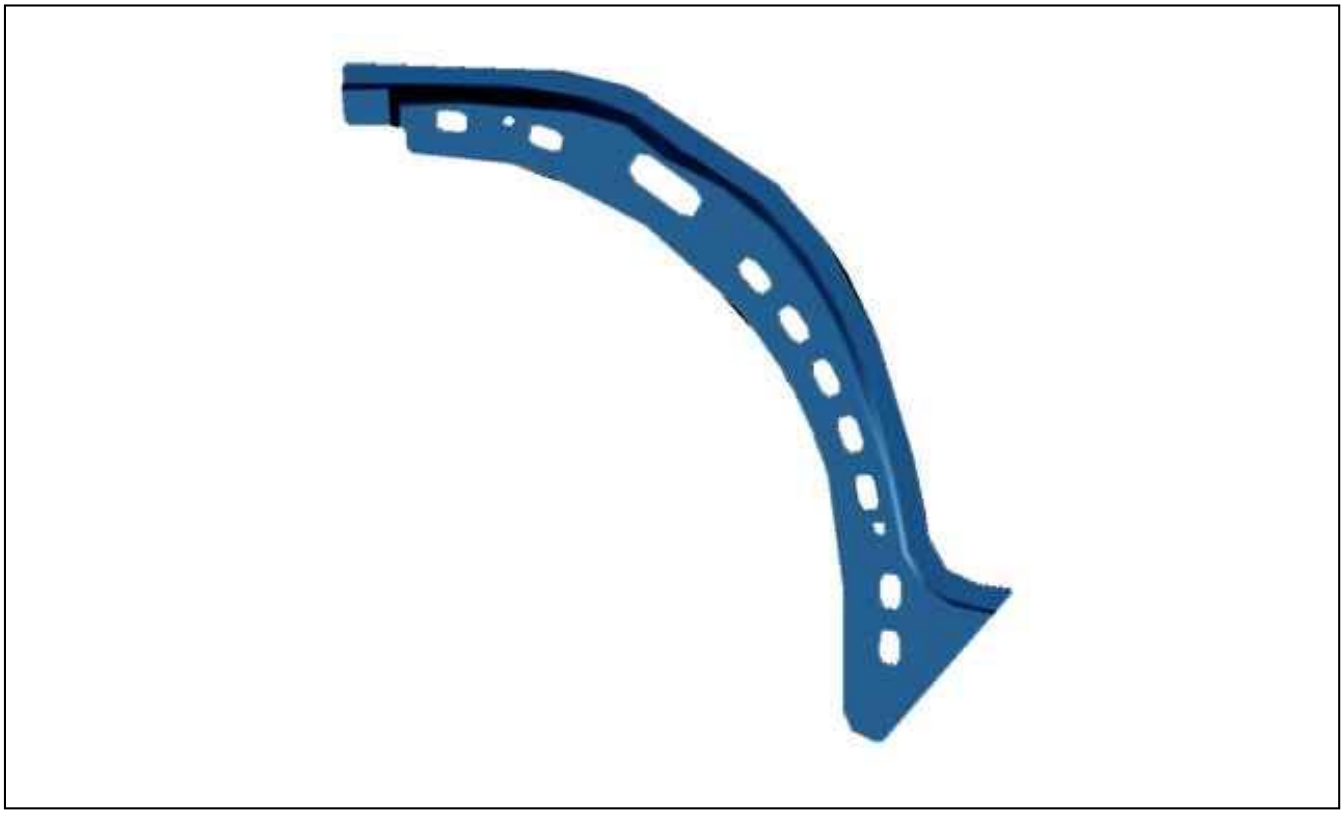

Figure : C4CP1R8D

Figure 1.
Front wheelarch strengthener.

3. Cutting out

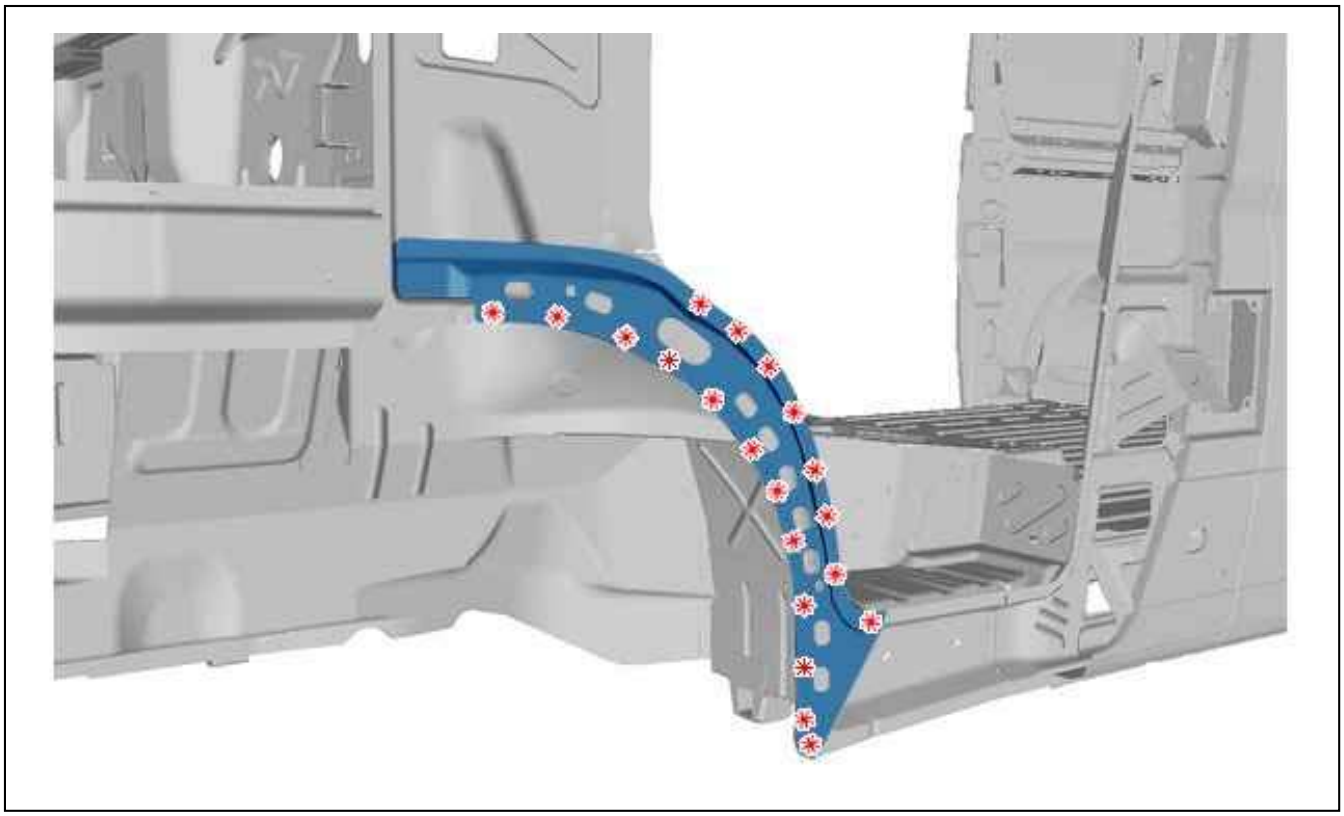

Figure : C4CP1R9D

Figure 2.
Cut out the spot welds .
Remove the front wheelarch strengthener.

4. Bodywork cleaning and preparation

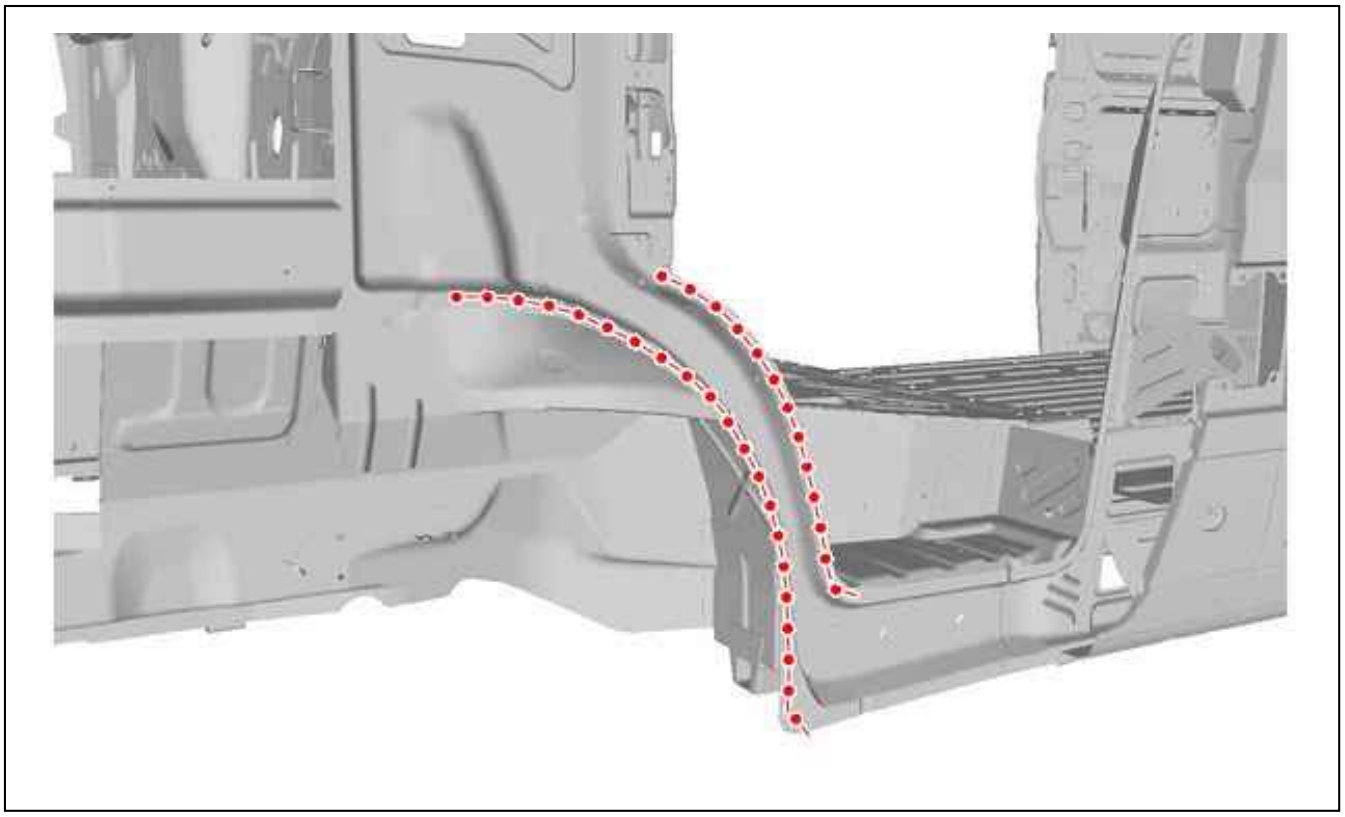

Figure : C4CP1RAD

Figure 3.
Prepare the mating edges .
Align the mating edges and protect them with a weldable primer.

5. Adjustment

Present the component for adjustment.
Check the fits and clearances (see the relevant operation).

6. Welding

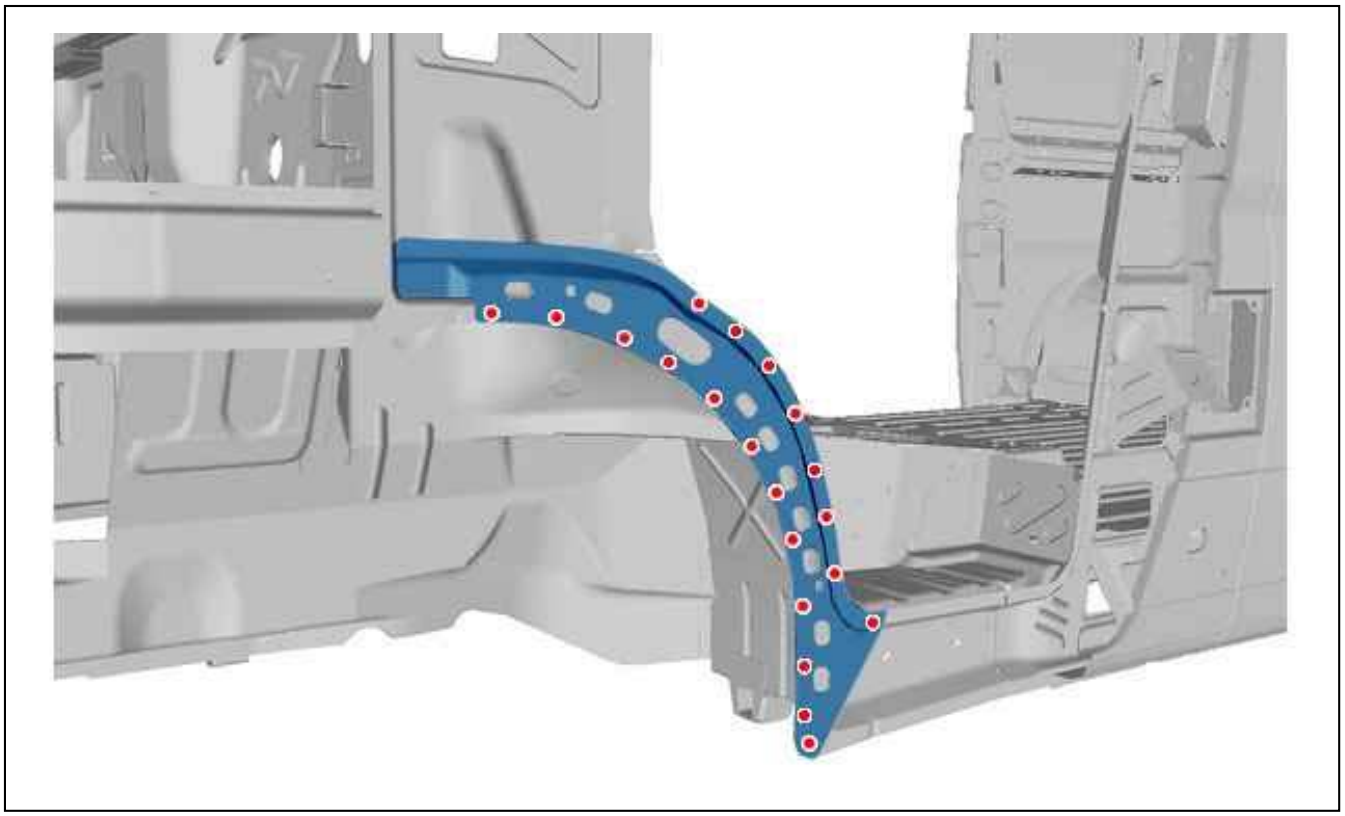

Figure : C4CP1RBD

Figure 4.
Weld with electric spot welds.

7. Protection

Paint then spray into the hollow sections, product index C5, in the repair zone (see the relevant operation).

8. Reinitialisation

Reconnect the battery.

ESSENTIAL : Perform the operations to be carried out following reconnection of the battery.

REPLACEMENT : FRONT WHEEL ARCH

ESSENTIAL : All of the stripped surfaces must be protected by means of the approved electrolytic rezincing process (see the relevant operation).

ESSENTIAL : Observe the elementary rules of hygiene and safety (wear a face mask to protect against fumes and vapour - work in a well ventilated space).

1. Additional operations

Disconnect the battery.
Partial replacement of the cab door frame (see the relevant operation).

2. Identification of the replacement parts



Figure : C4CP1RHD

Figure 1.
Front wheel arch.

3. Cutting out

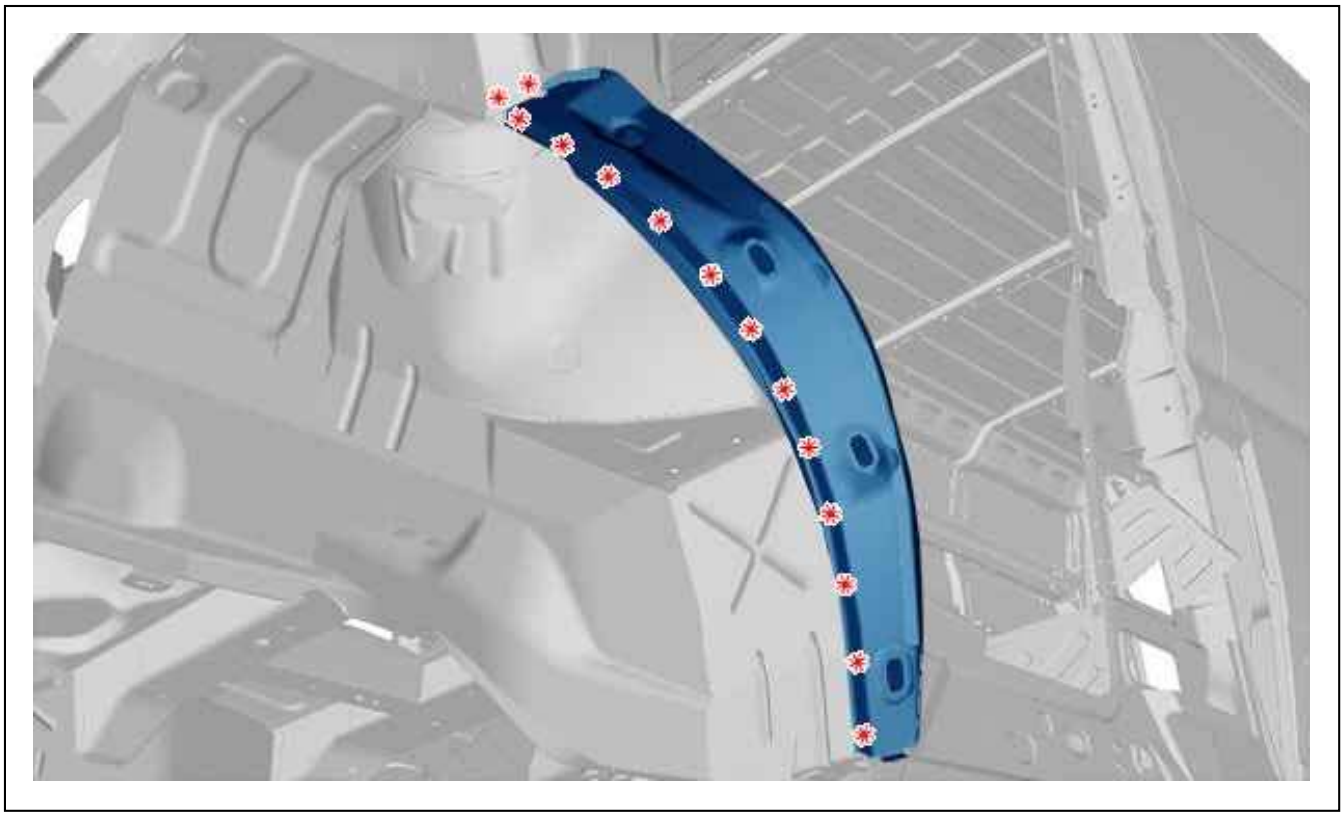

Figure : C4CP1RJD

Figure 2.
Cut out the spot welds .
Remove the front wheelarch .

4. Bodywork cleaning and preparation

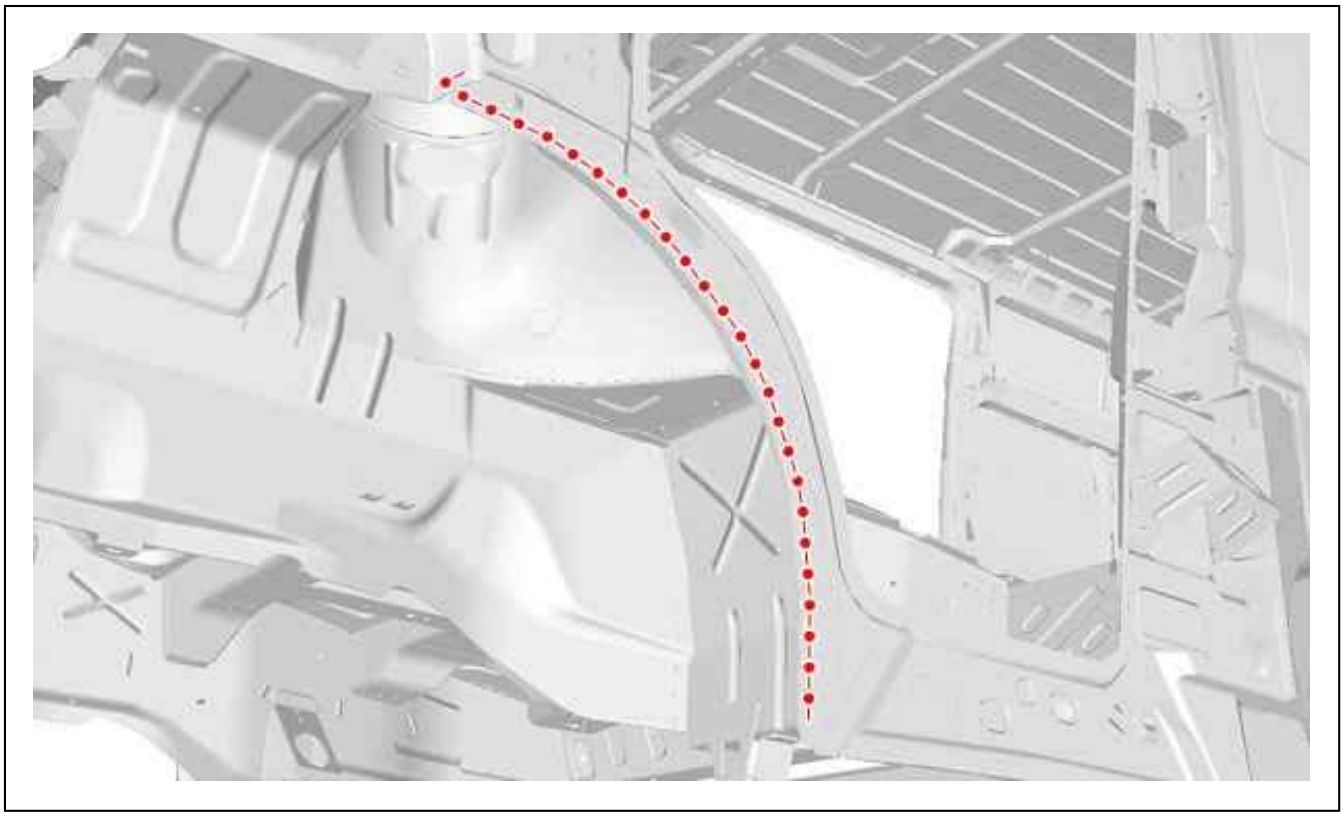

Figure : C4CP1RKD

Figure 3.
Prepare the mating edges .
Align the mating edges and protect them with a weldable primer.

5. Adjustment

Present the component for adjustment.
Check the fits and clearances (see the relevant operation).

6. Welding

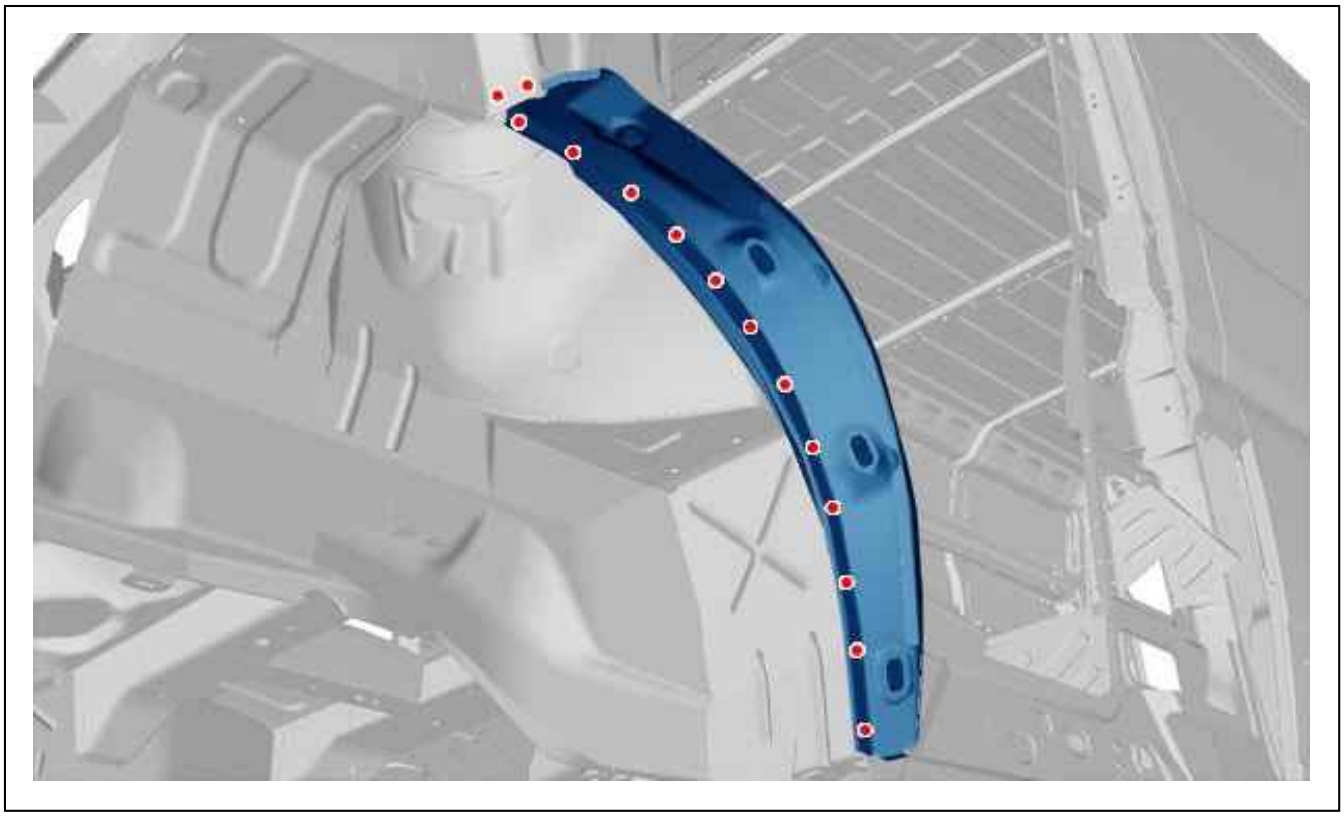

Figure : C4CP1RLD

Figure 4.
Weld with electric spot welds.

7. Sealing

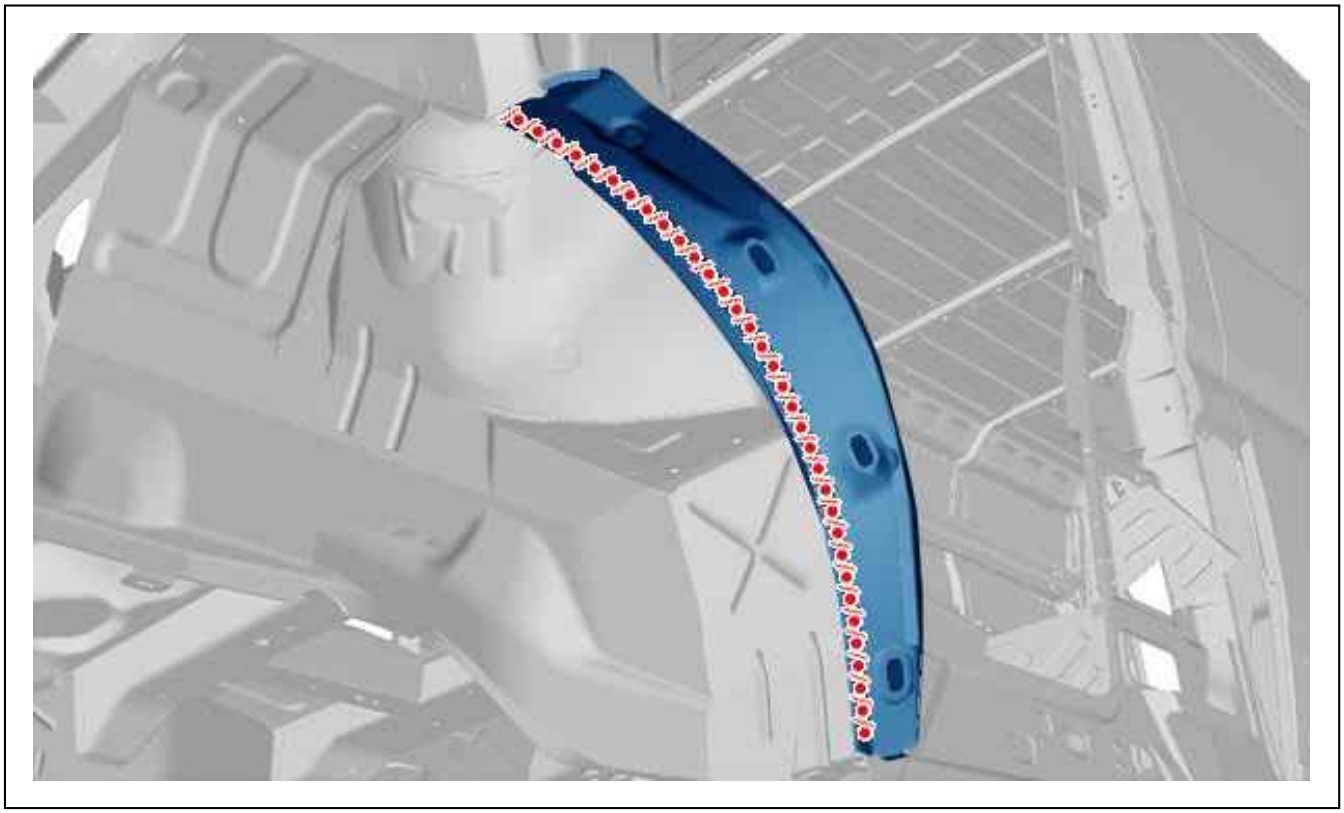

Figure : C4CP1RMD

Figure 5.
Apply a phosphate-print layer on the zone laid bare.
Apply a sealing mastic of type " A4" (see the relevant operation).
8 - Protection.
Paint then spray into the hollow sections, product index C5, in the repair zone (see the relevant operation).
Apply an anti-chip layer (see the relevant operation).

8. 9 - Reinitialisation

Reconnect the battery.

ESSENTIAL : Perform the operations to be carried out following reconnection of the battery.

REPLACEMENT : REAR WING INNER PANEL ASSEMBLY

ESSENTIAL : All of the stripped surfaces must be protected by means of the approved electrolytic rezincing process (see the relevant operation).

ESSENTIAL : Observe the elementary rules of hygiene and safety (wear a face mask to protect against fumes and vapour - work in a well ventilated space).

1. Additional operations

Disconnect the battery.
Replace Front foot reinforcement.
Release the wiring harnesses.

2. Identification of the replacement parts

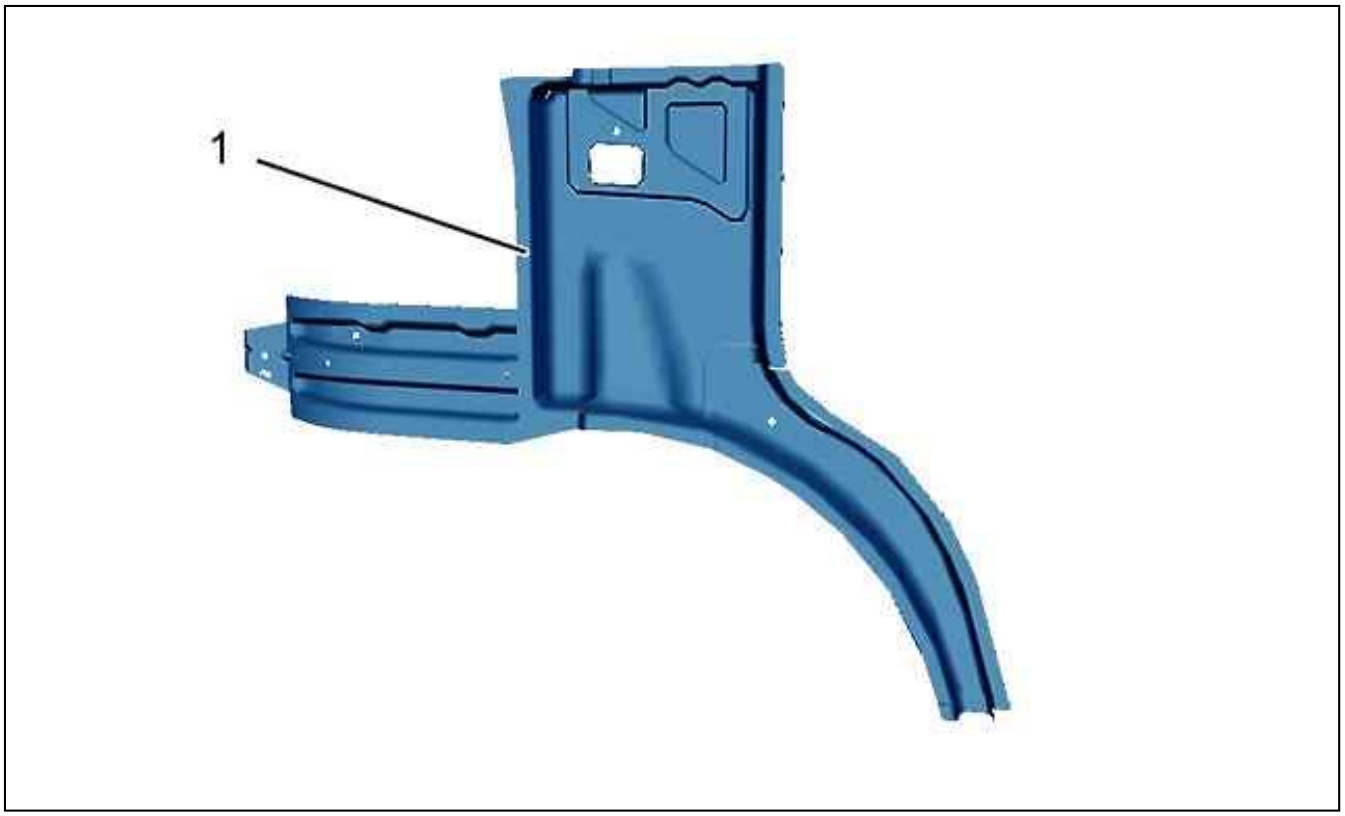

Figure : C4CP1TVD

Figure 1.
(1) Front wing inner panel assembly (/).

3. Composition of replacement parts

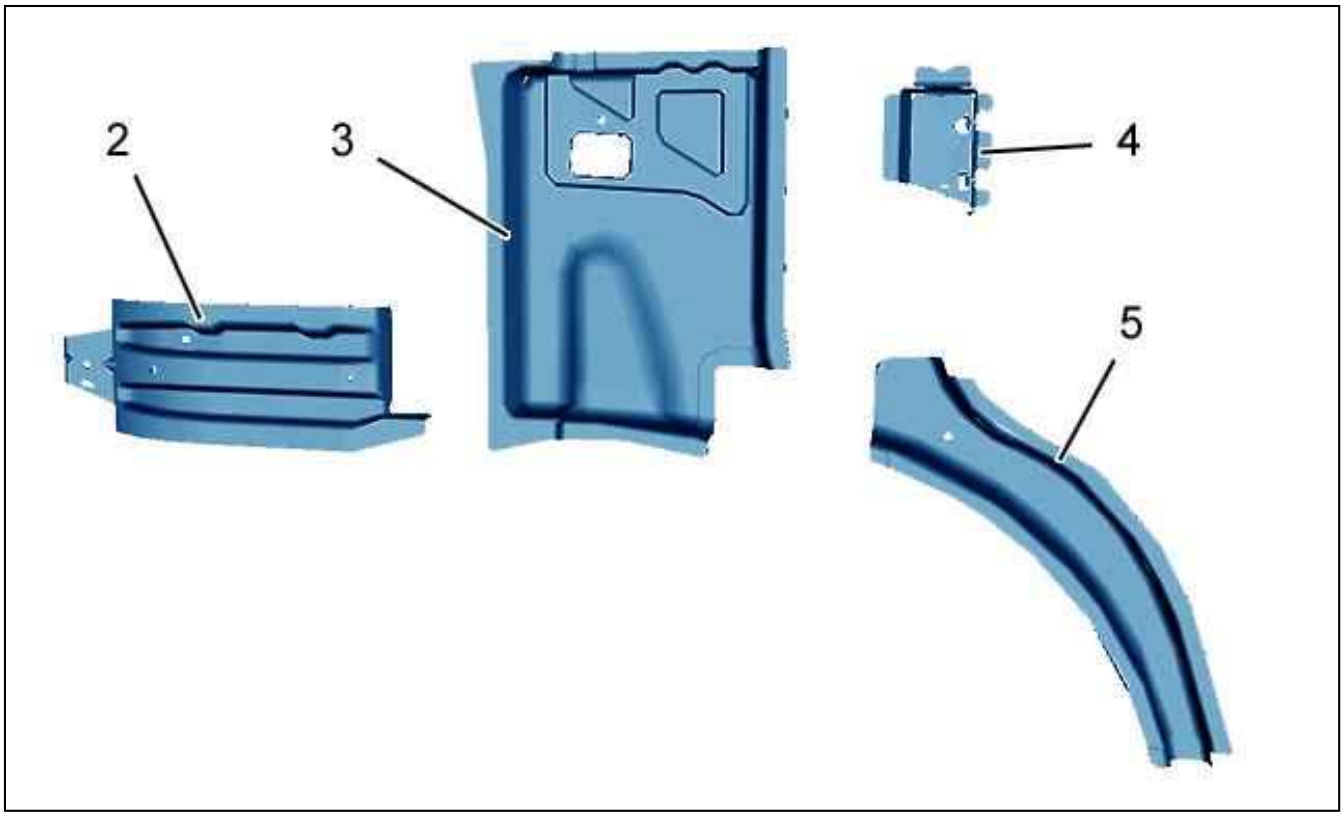

Figure : C4CP1TWD

Figure 2.
(2) Front wing half-panel inner panel .
(3) Front wing inner panel .
(4) Dashboard crossmember fixing .
(5) Wheel arch inner panel.

4. Cutting out

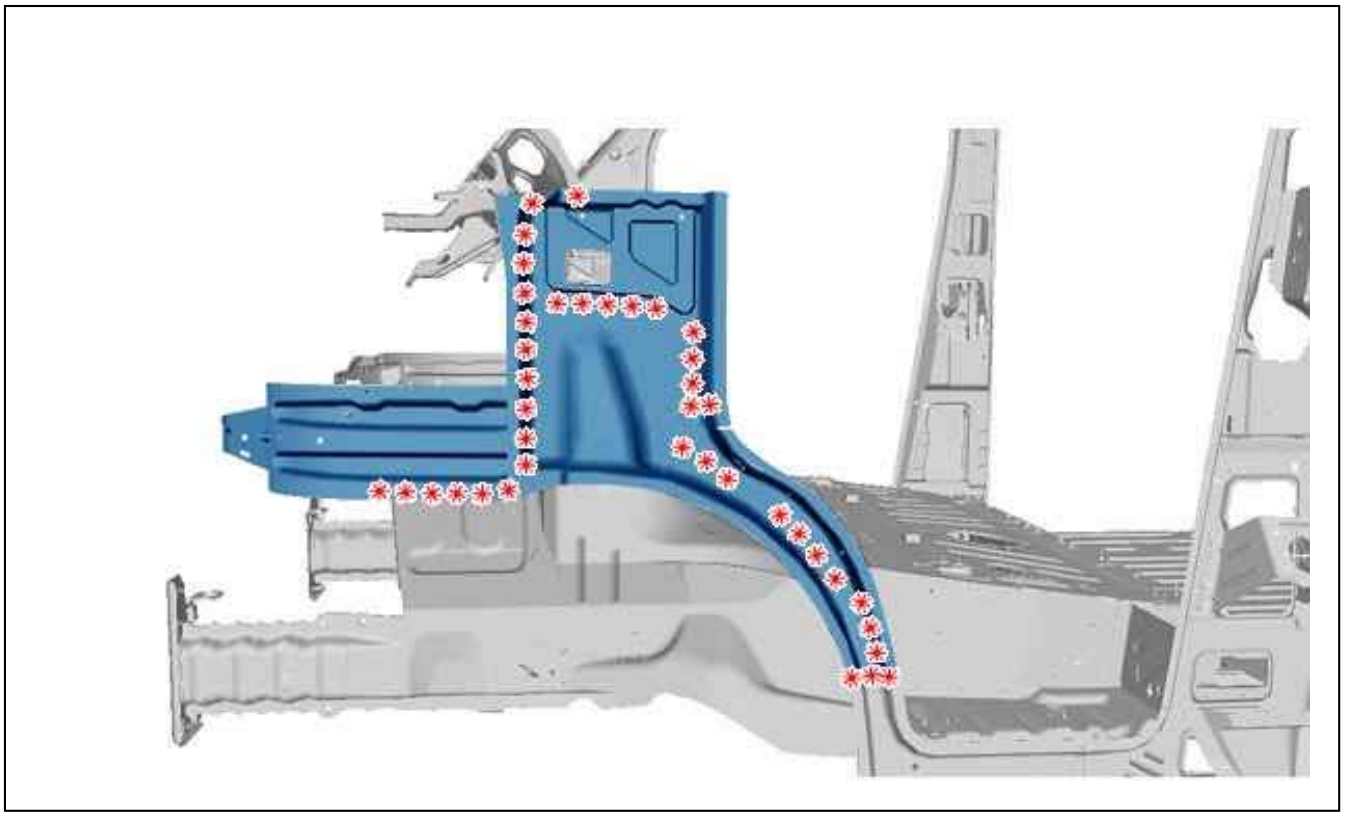

Figure : C4CP1TXD

Figure 3.
Cut out the spot welds .
Remove the front wing inner panel assembly .

5. Bodywork cleaning and preparation

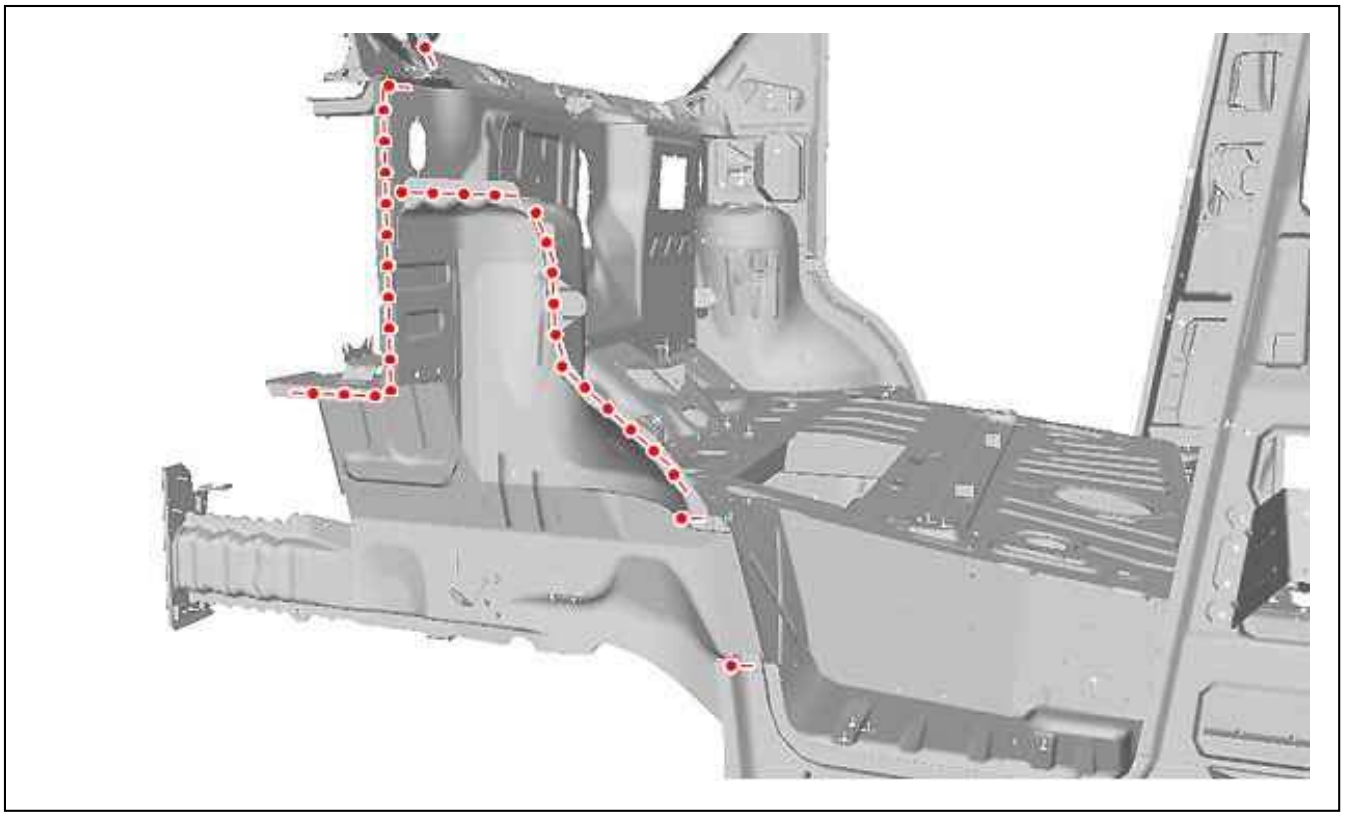

Figure : C4CP1TYD

Figure 4.
Prepare the mating edges .
Align the mating edges and protect them with a weldable primer.

6. Adjustment

Present the elements, allowing for adjustment.
Check the fits and clearances (see the relevant operation).

7. Welding

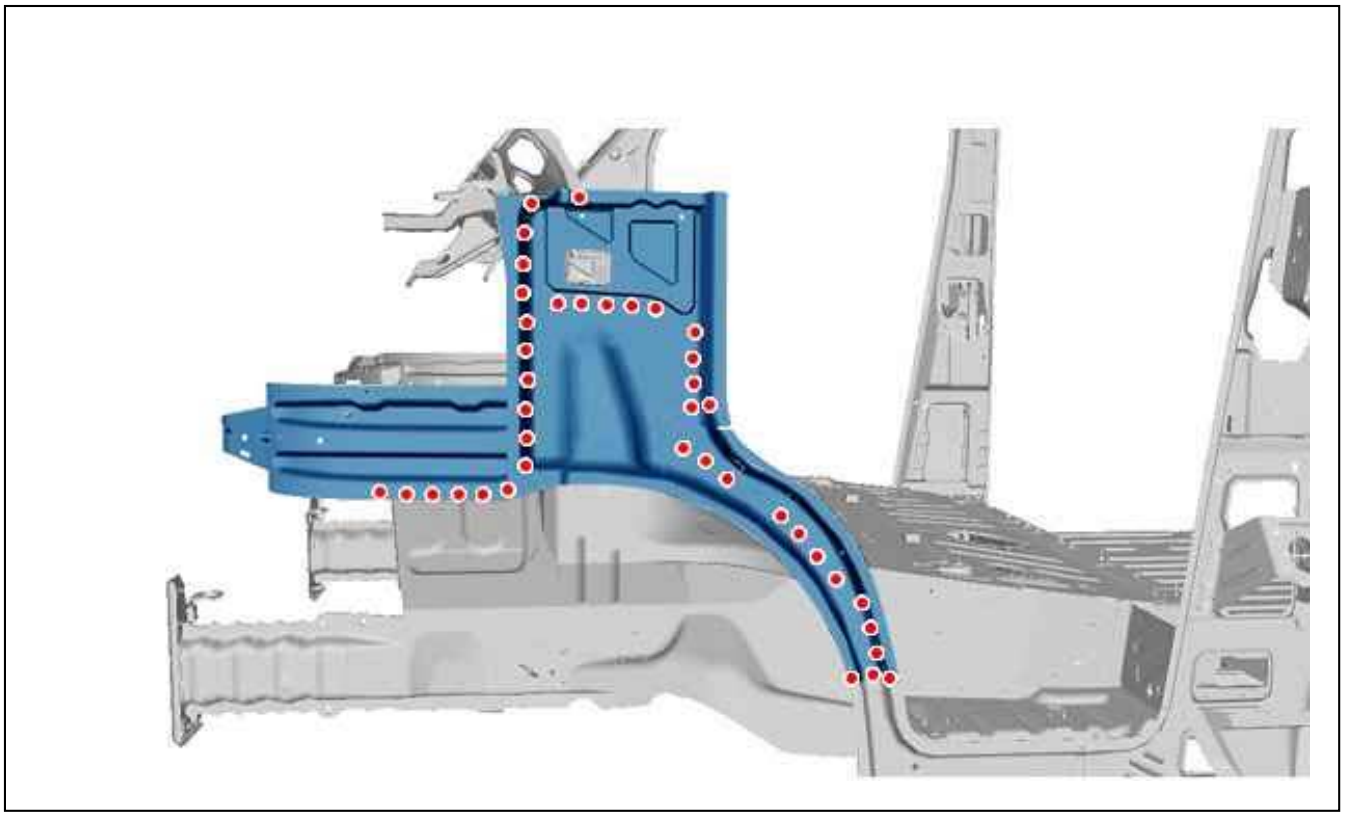

Figure : C4CP1TZD

Figure 5.
Weld with electric spot welds.

8. Sealing

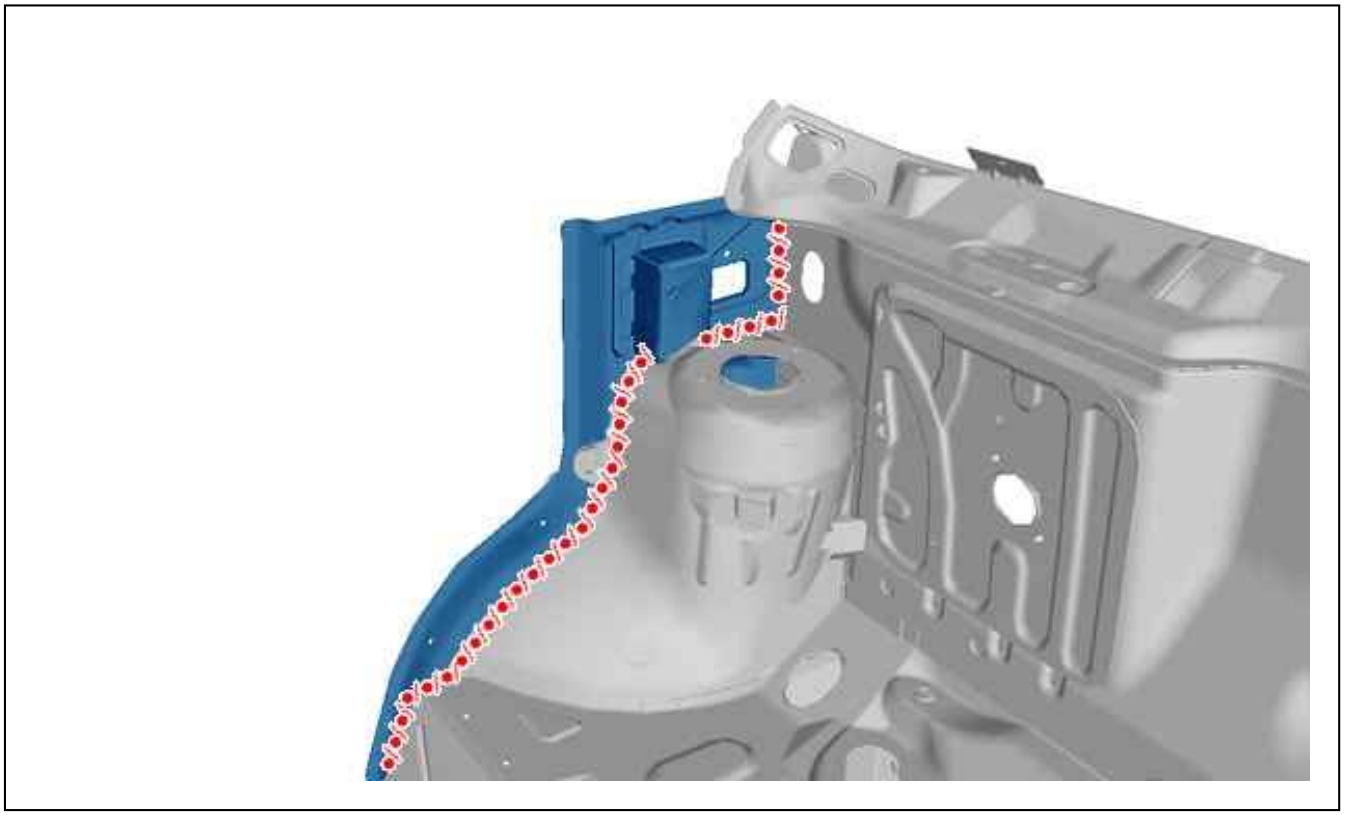

Figure : C4CP1U0D

Figure 6.
Apply a phosphate-print layer on the zone laid bare.
Apply a sealing mastic index A1 (see the relevant operation).

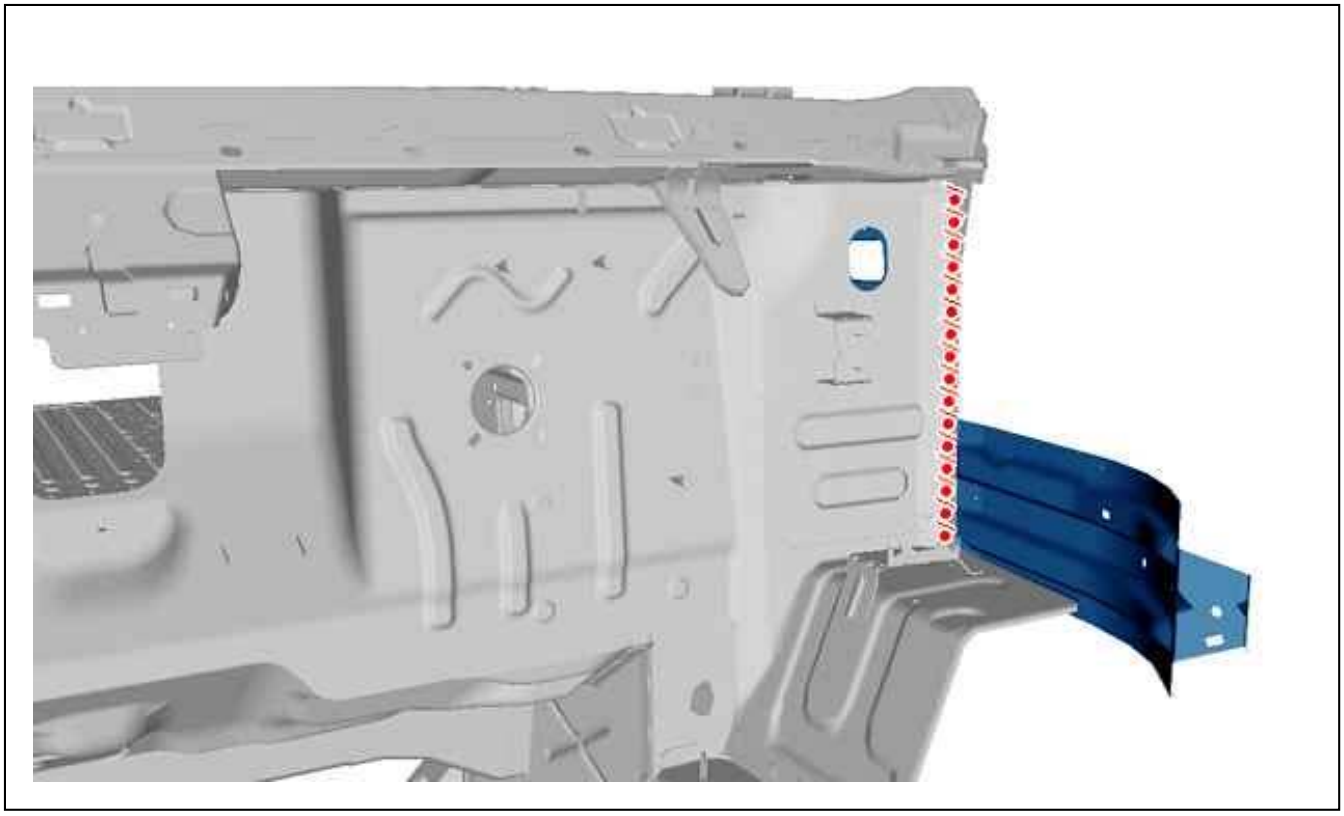

Figure : C4AP1NUD

Figure 7.
Apply a phosphate-print layer on the zone laid bare.
Apply a sealing mastic index A1 (see the relevant operation).

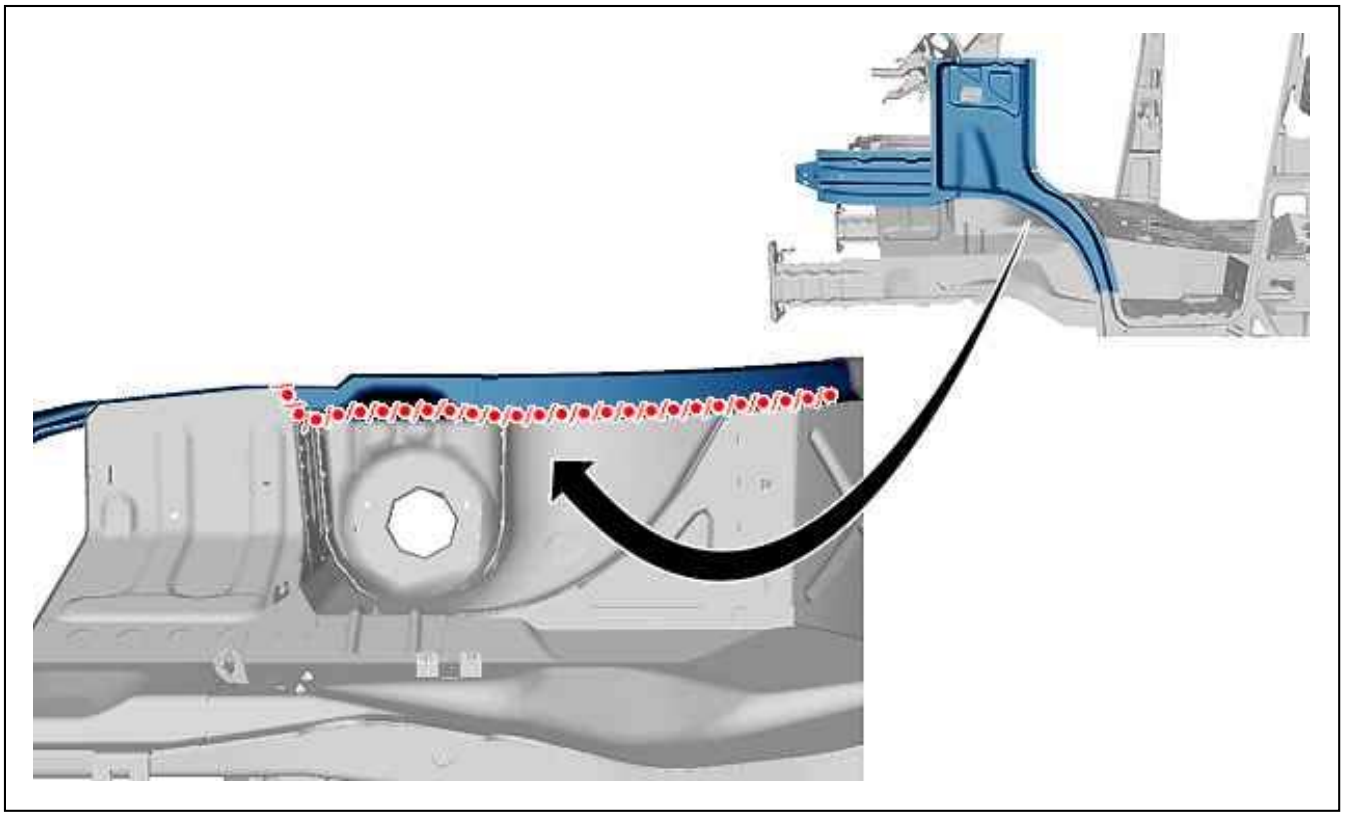

Figure : C4CP1U1D

Figure 8.
Apply a phosphate-print layer on the zone laid bare.
Apply a sealing mastic of type " A1" (see the relevant operation).

9. Protection

Paint then spray into the hollow sections, product index C5, in the repair zone (see the relevant operation).
Apply an anti-chip layer (see the relevant operation).

10. Reinitialisation

Reconnect the battery.

ESSENTIAL : Perform the operations to be carried out following reconnection of the battery.

REPLACEMENT : FRONT SUSPENSION SUPPORT ASSEMBLY

ESSENTIAL : All of the stripped surfaces must be protected by means of the approved electrolytic rezincing process (see the relevant operation).

ESSENTIAL : Observe the elementary rules of hygiene and safety (wear a face mask to protect against fumes and vapour - work in a well ventilated space).

1. Additional operations

Disconnect the battery.
Replace the front inner wing panel assembly (see the relevant operation).
Release the wiring harnesses.

2. Identification of the replacement parts

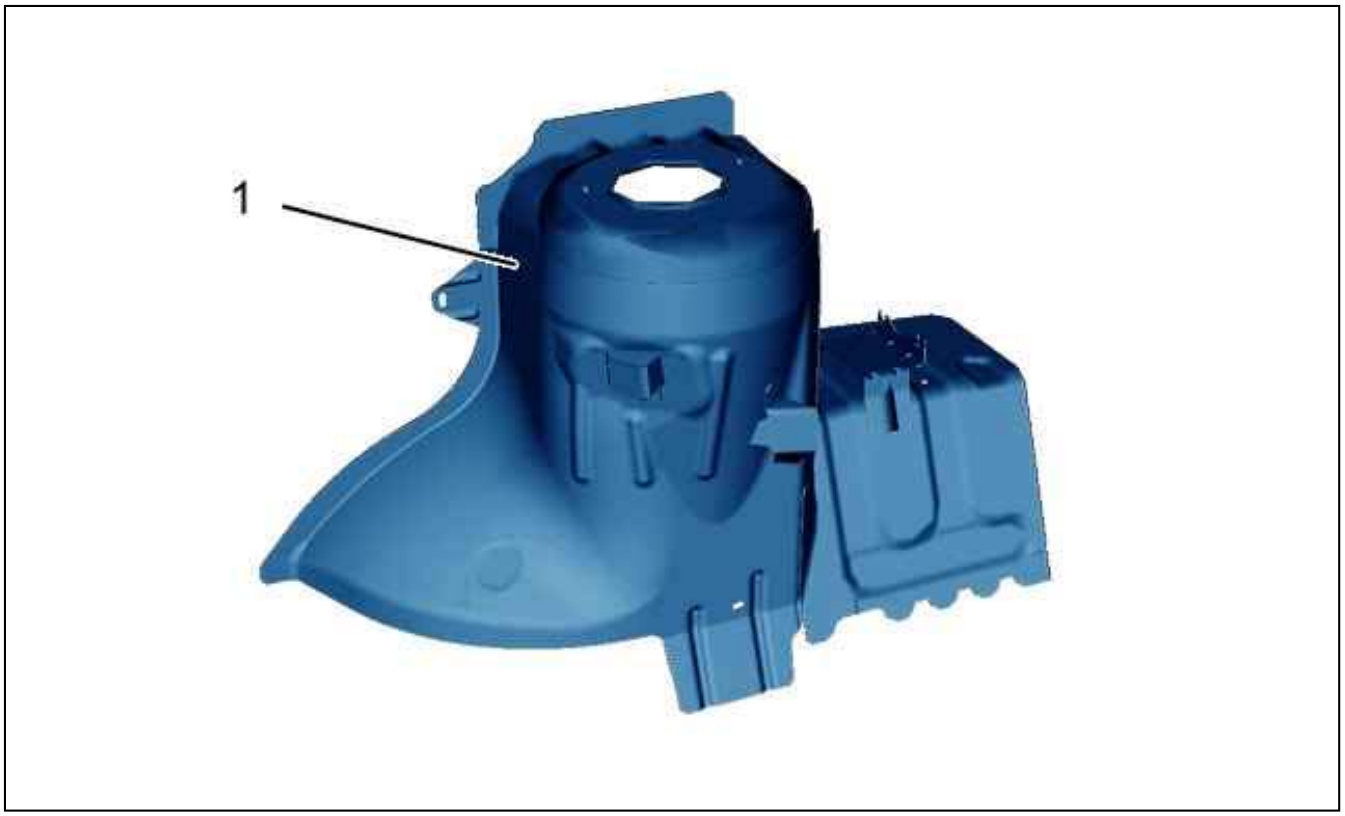

Figure : C4AP1QPD

Figure 1.
Front suspension support assembly (1).

3. Composition of replacement parts

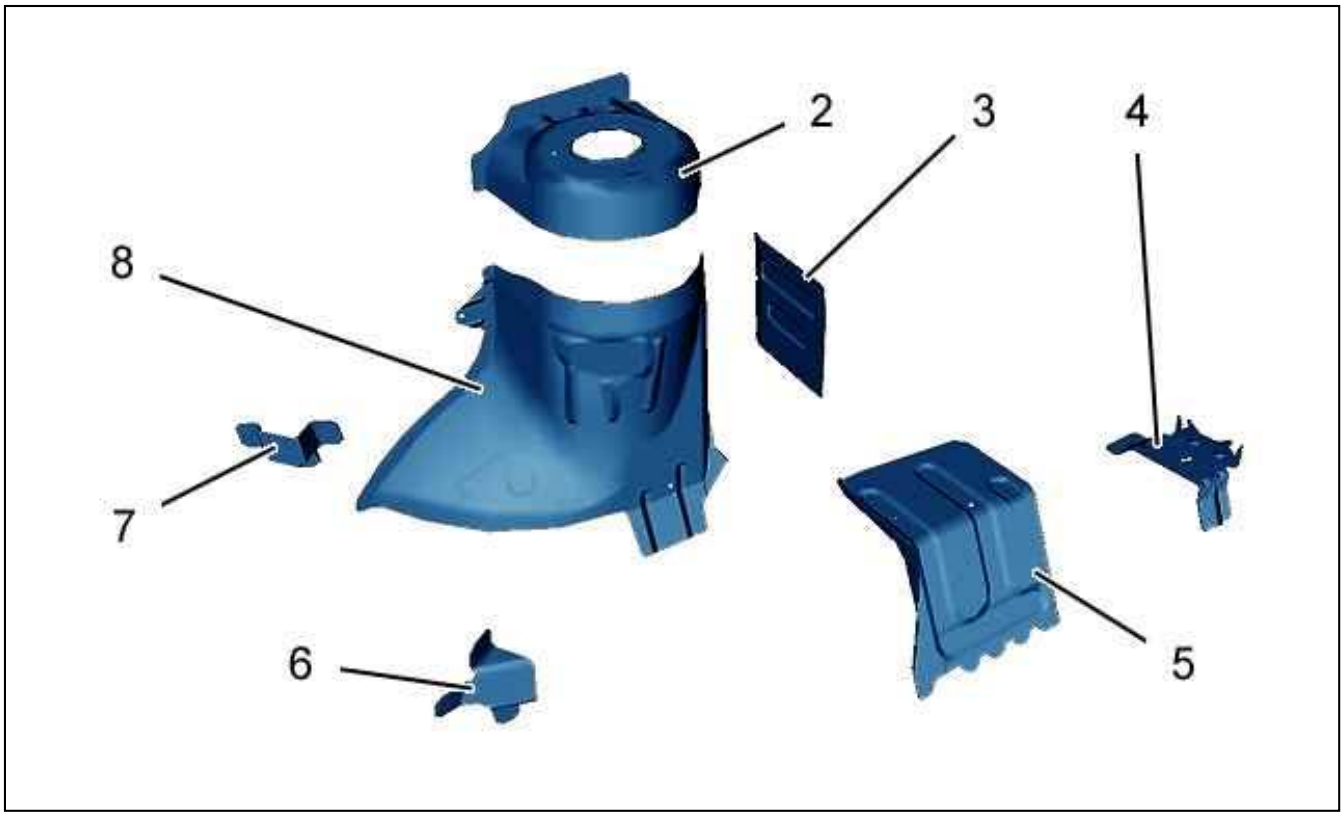

Figure : C4AP1QQD

Figure 2.
Upper front suspension support (2).
Front bulkhead side support (3).
Anti-lock braking system ECU support (4).
Front chassis leg connection panel (5).
Lower dashboard fixing support (6).
Upper dashboard fixing support (7).
Lower front suspension support (8).

4. Preparation of the replacement parts



Figure : C4AP1QRD

Figure 3.
Front suspension support assembly (1).
Mark then drill to Ø 8 mm for later plug welding (21 holes).
Prepare the mating edges .

5. Cutting out

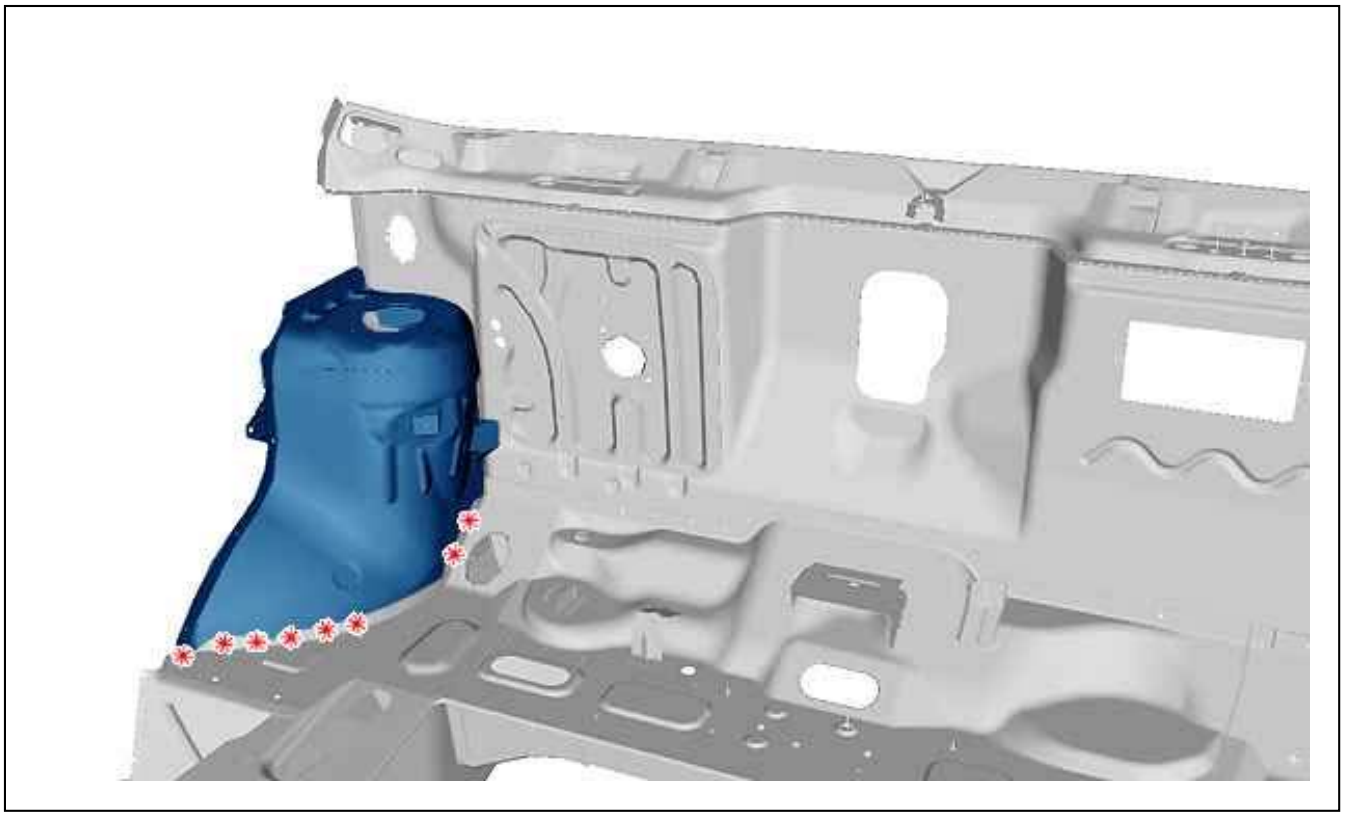

Figure : C4AP1QSD

Figure 4.
Cut out the spot welds .

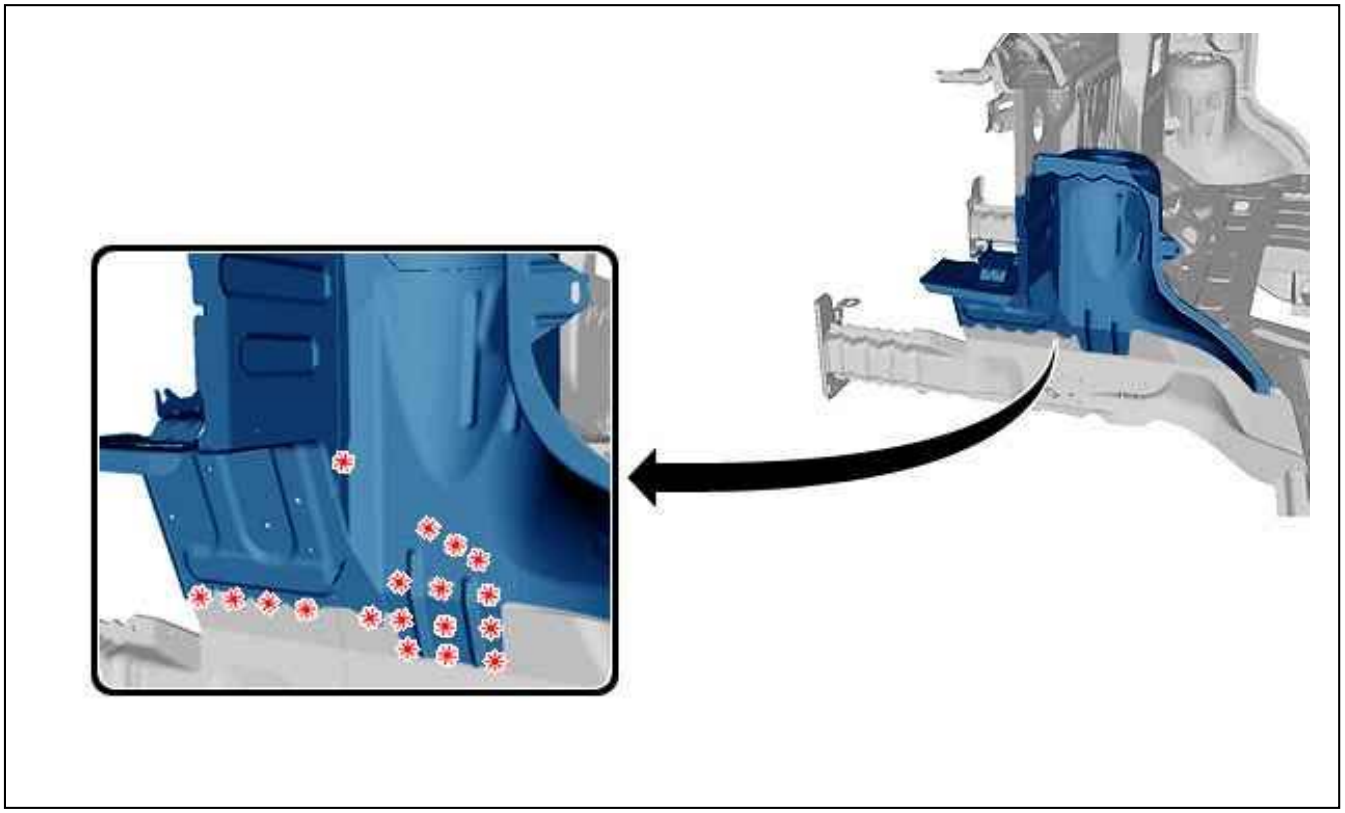

Figure : C4AP1QTD

Figure 5.

Cut out the spot welds .

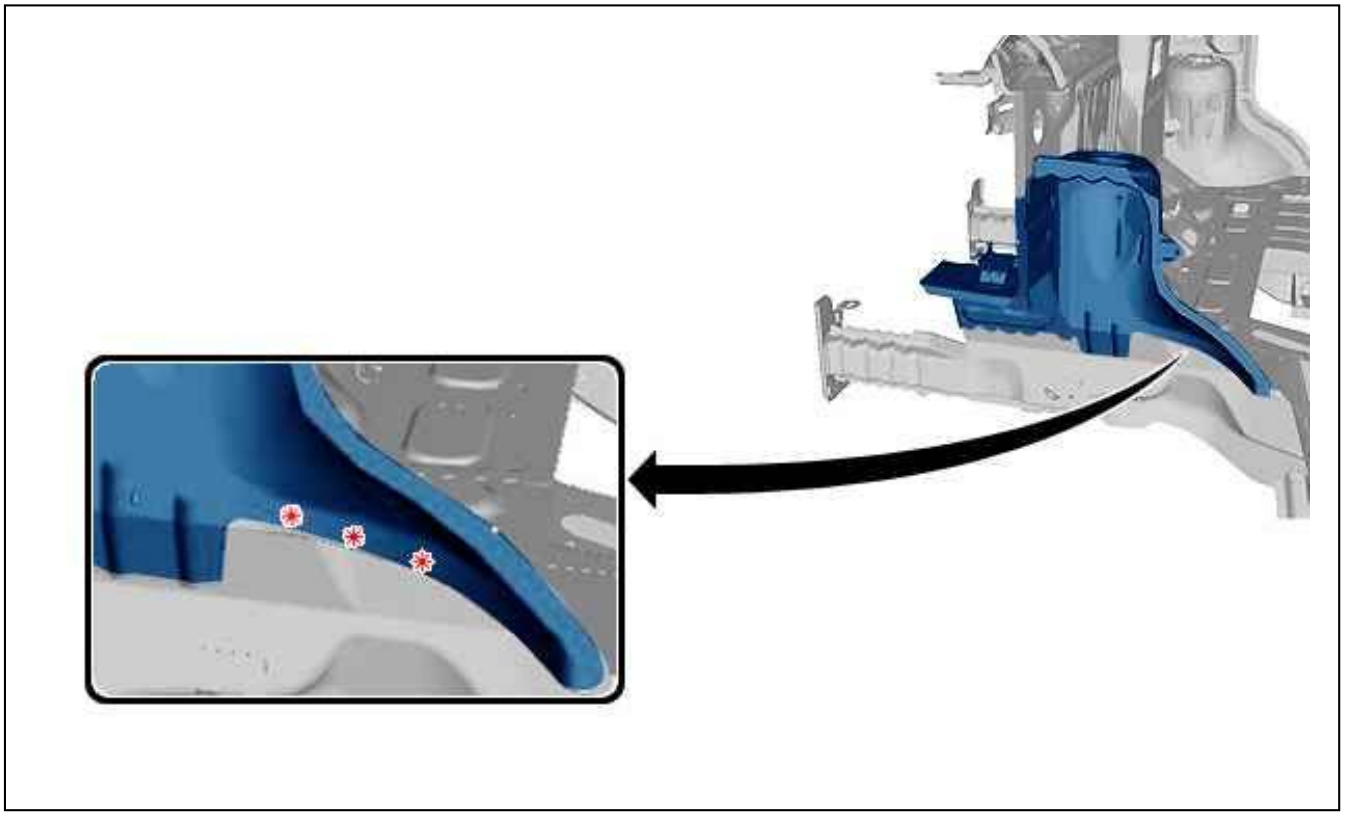

Figure : C4AP1QUD

Figure 6.
Cut out the spot welds .

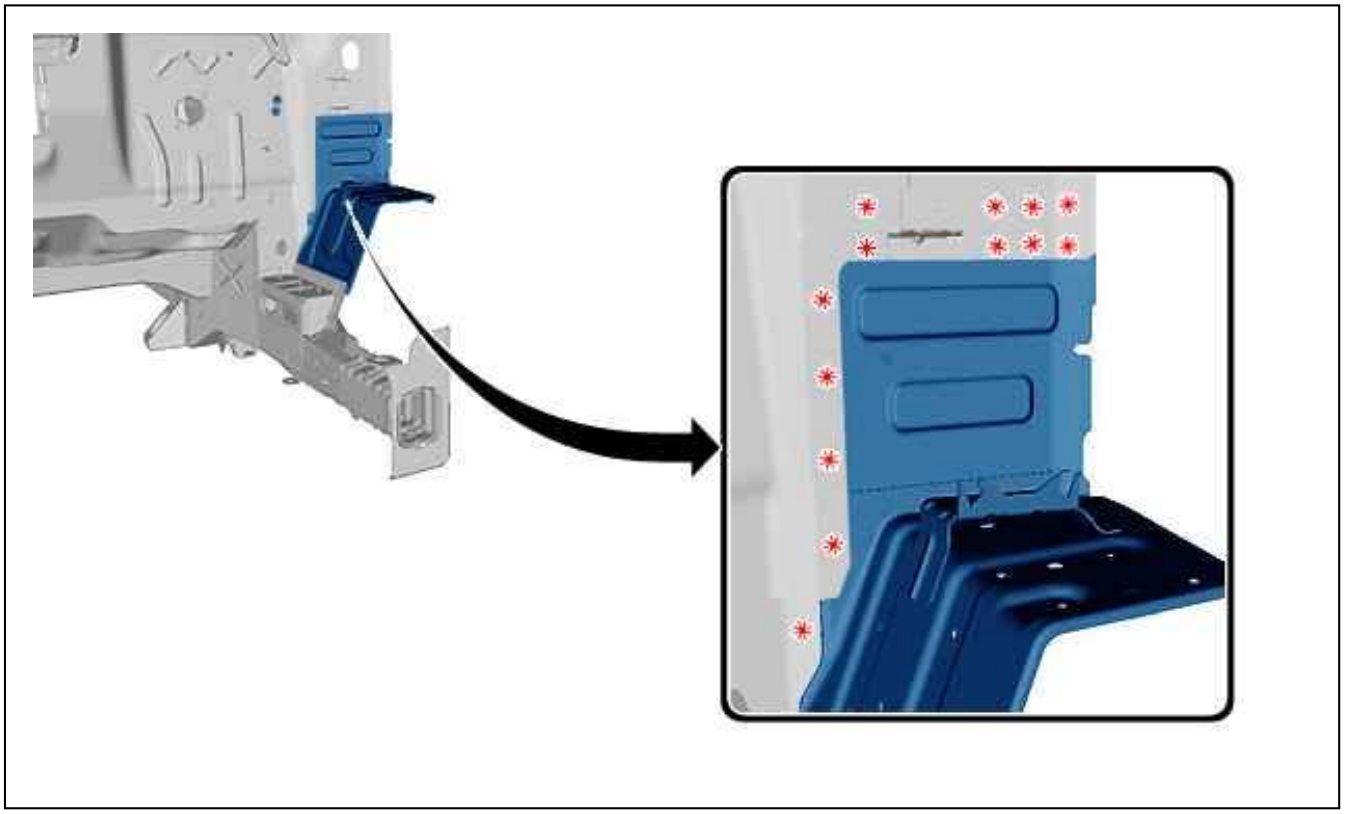

Figure : C4AP1QVD

Figure 7.
Cut out the spot welds .
Remove the front suspension support assembly.

6. Bodywork cleaning and preparation

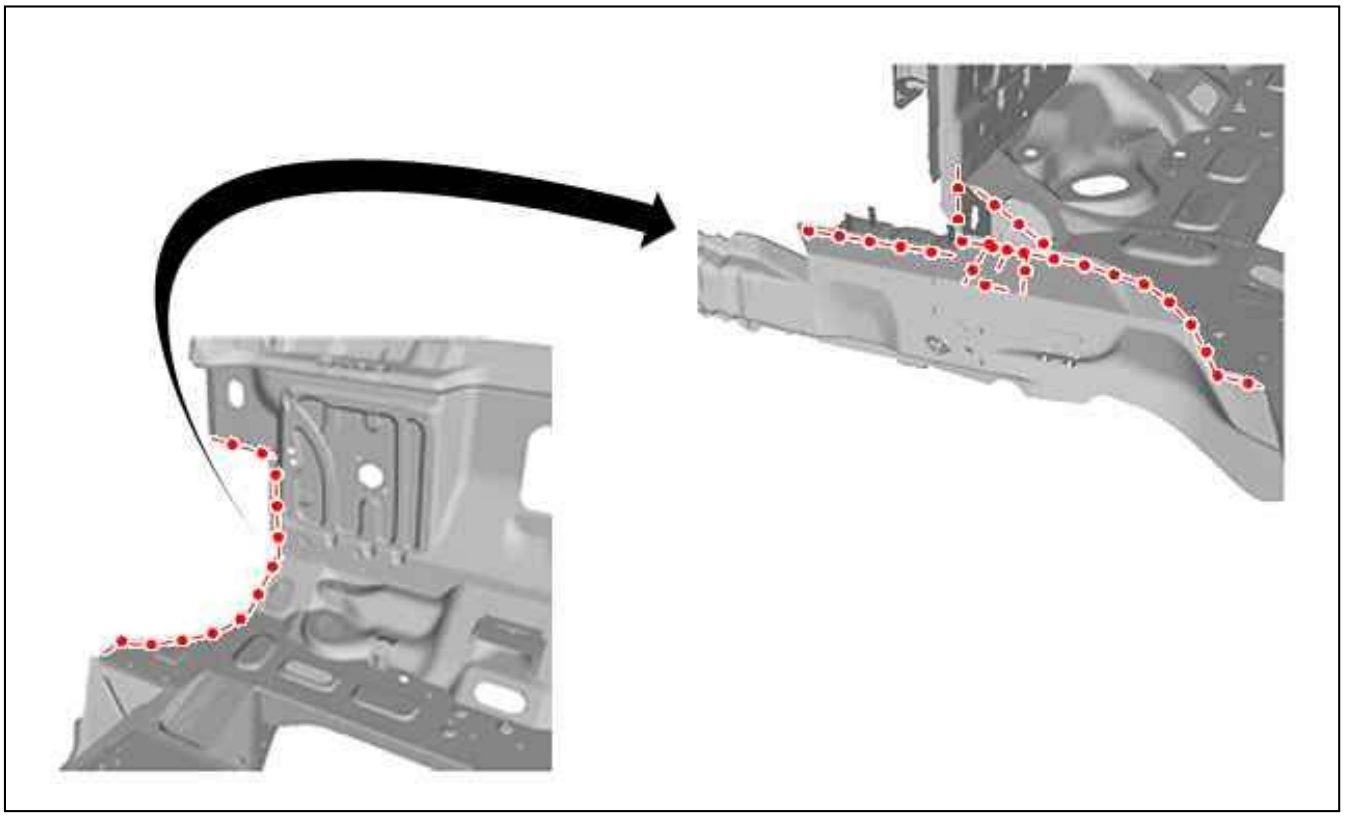

Figure : C4AP1QWD

Figure 8.
Prepare the mating edges .
Align the mating edges and protect them with a weldable primer.

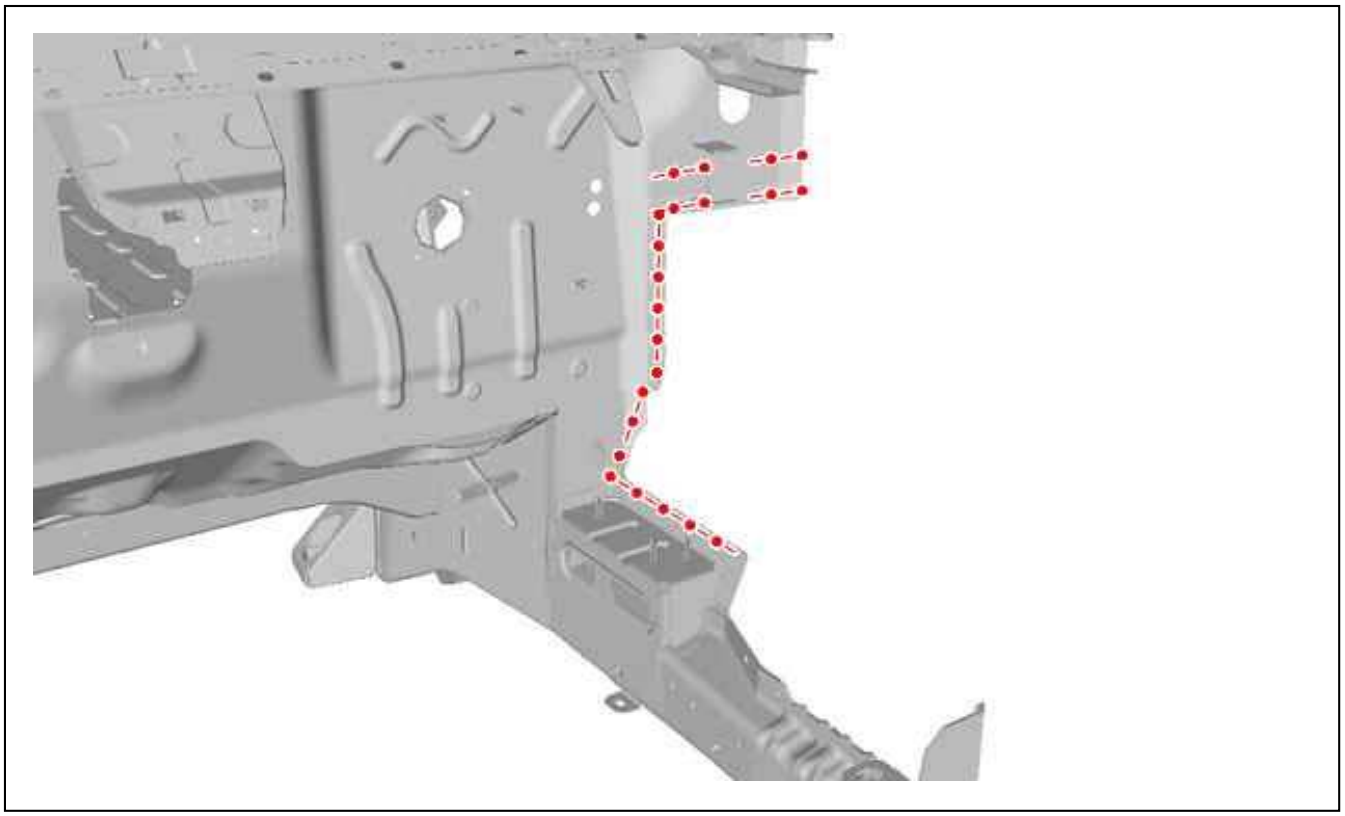

Figure : C4AP1QXD

Figure 9.
Prepare the mating edges .
Align the mating edges and protect them with a weldable primer.

7. Adjustment

Present the elements, allowing for adjustment.
Check the fits and clearances (see the relevant operation).
Use the approved checking and measuring equipment.

8. Welding

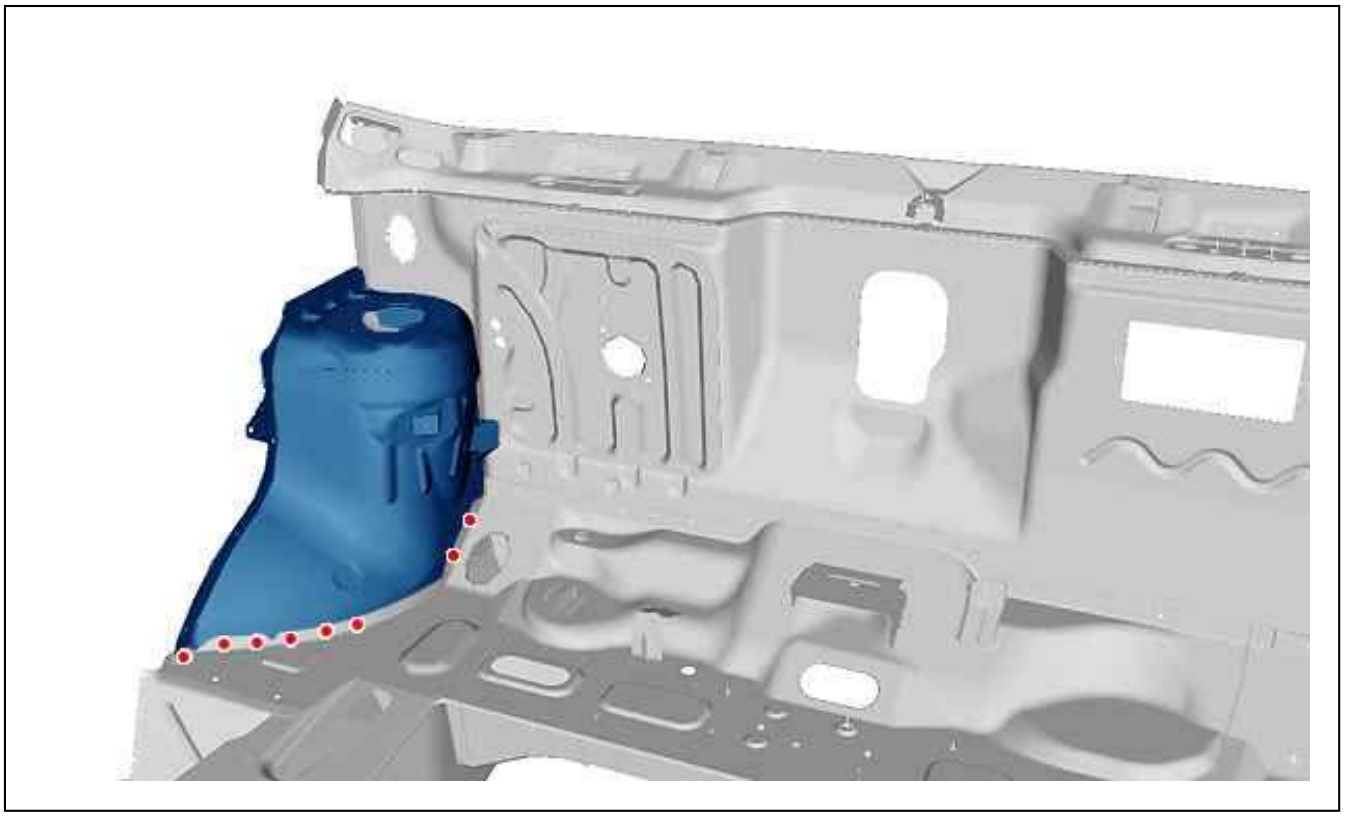

Figure : C4AP1QYD

Figure 10.
Weld with MIG or MAG spot welds.
Grind the spot welds.

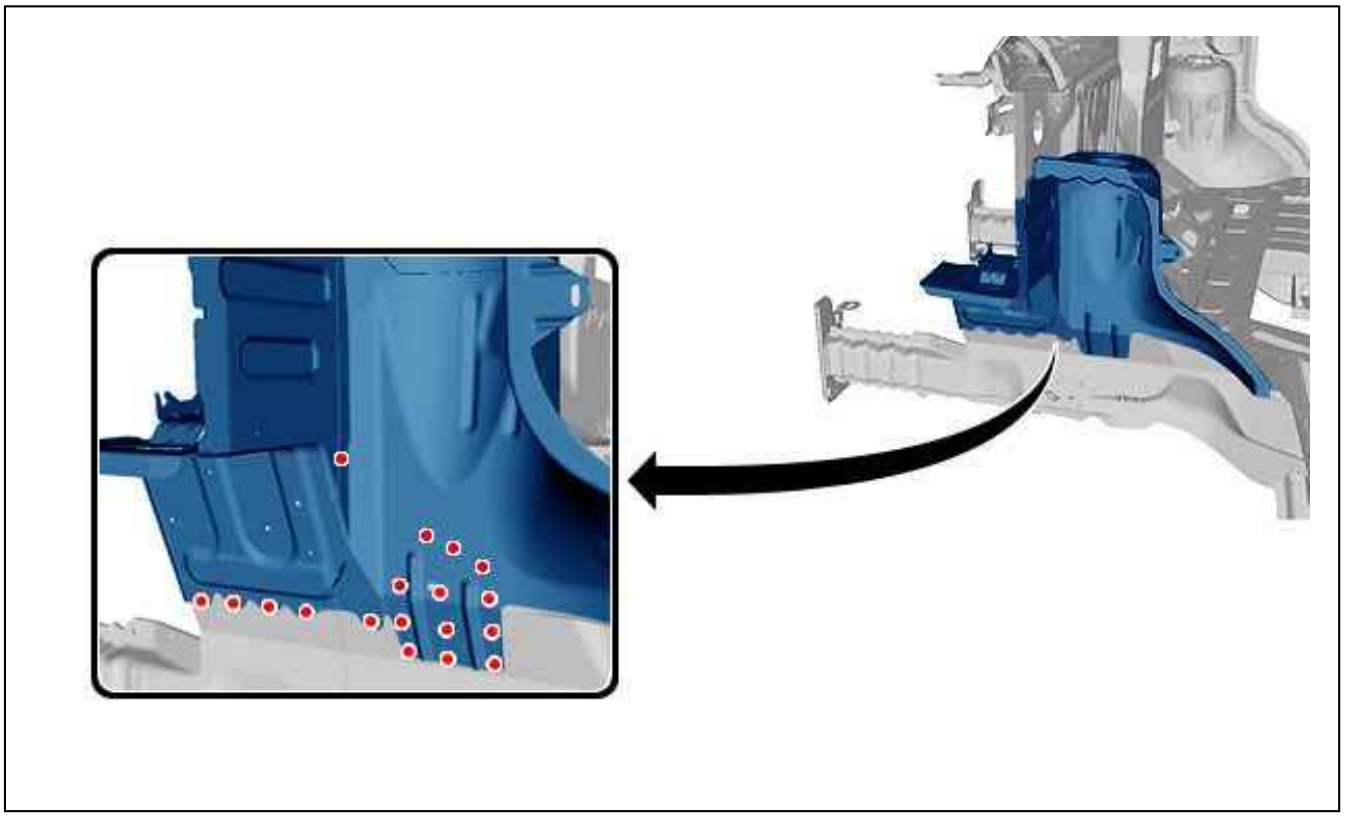

Figure : C4AP1QZD

Figure 11.
Weld with MIG or MAG spot welds.
Grind the spot welds.

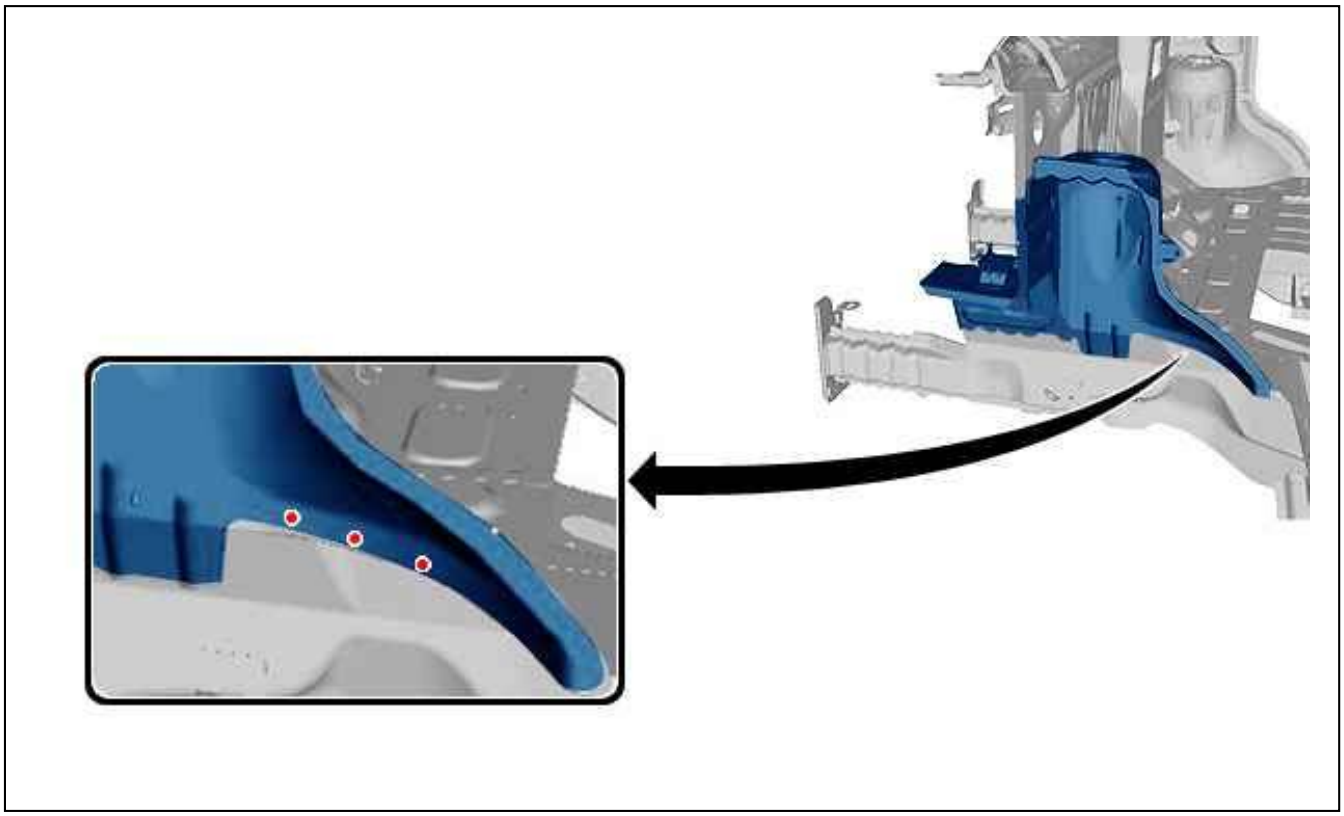

Figure : C4AP1R0D

Figure 12.
Weld with MIG or MAG spot welds.
Grind the spot welds.

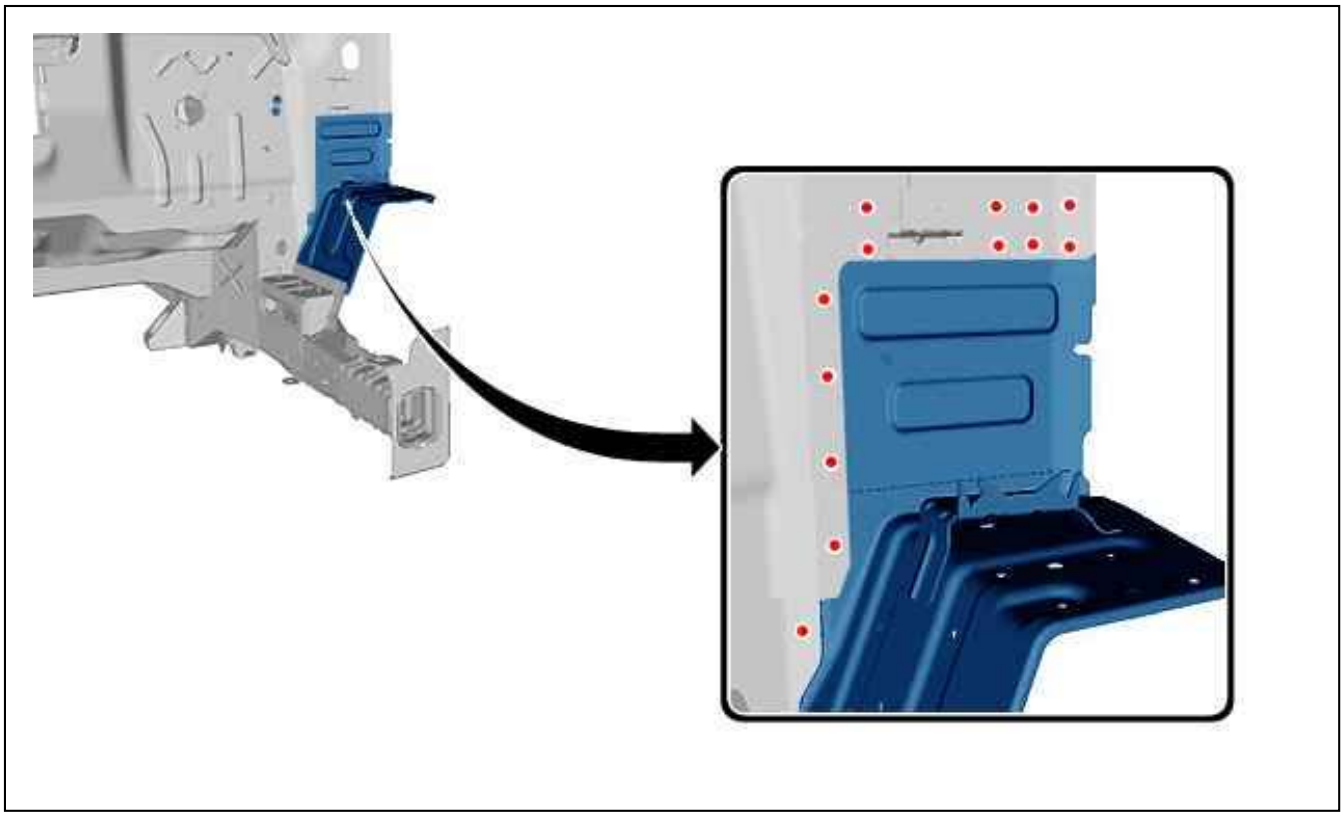

Figure : C4AP1R1D

Figure 13.
Weld with MIG or MAG spot welds.
Grind the spot welds.

9. Sealing

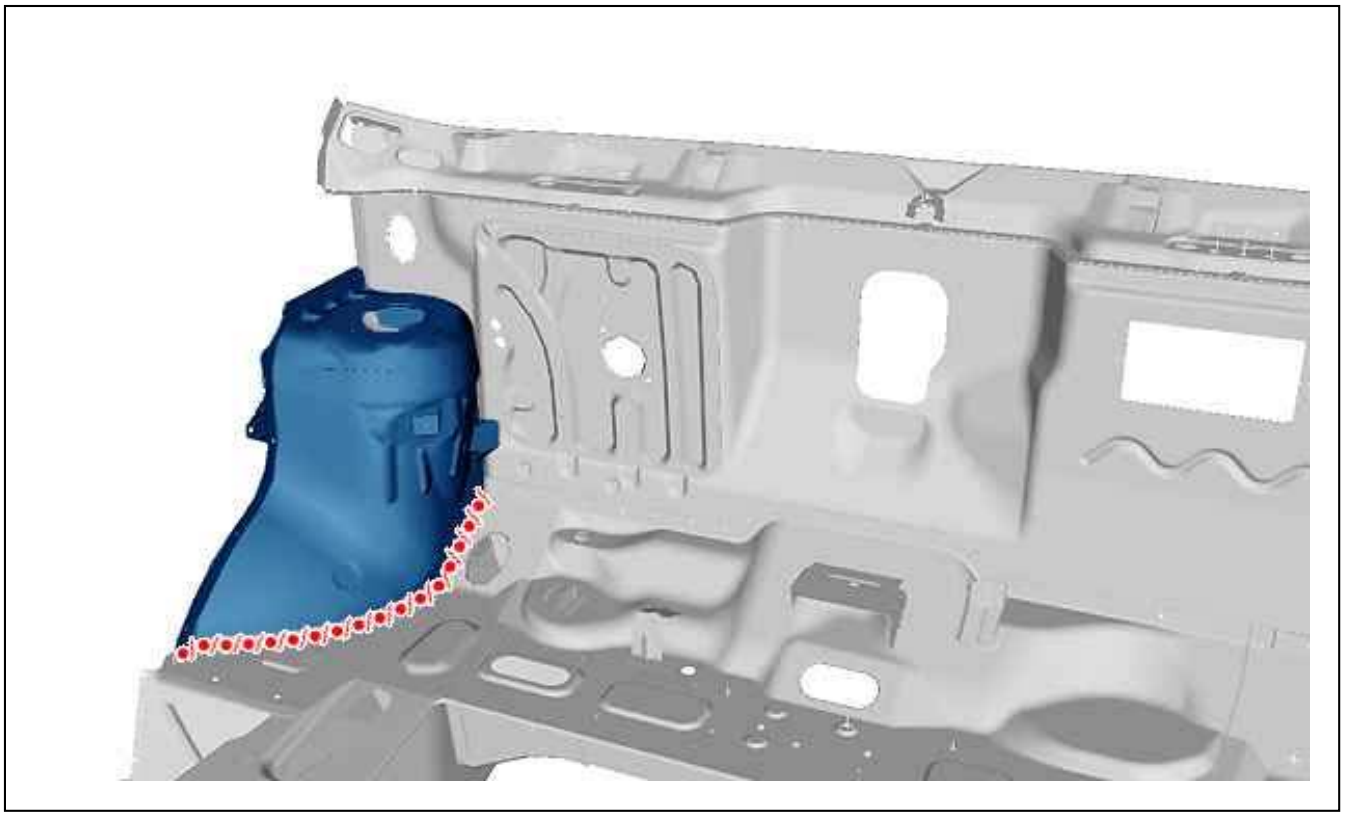

Figure : C4AP1R2D

Figure 14.
Apply a phosphate-print layer on the zone laid bare.
Apply a sealing mastic of type " A1" (see the relevant operation).

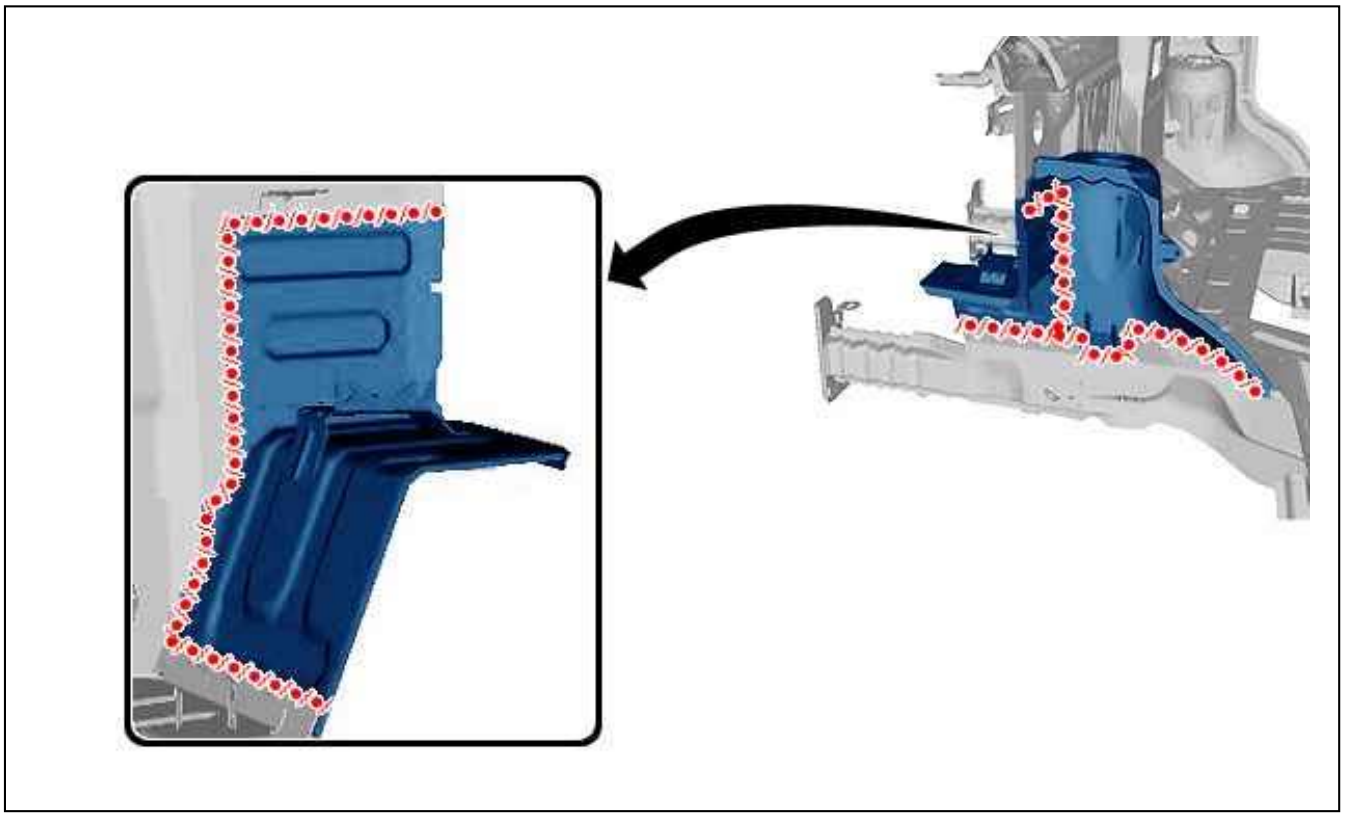

Figure : C4AP1R3D

Figure 15.
Apply a phosphate-print layer on the zone laid bare.
Apply a sealing mastic of type " A1" (see the relevant operation).

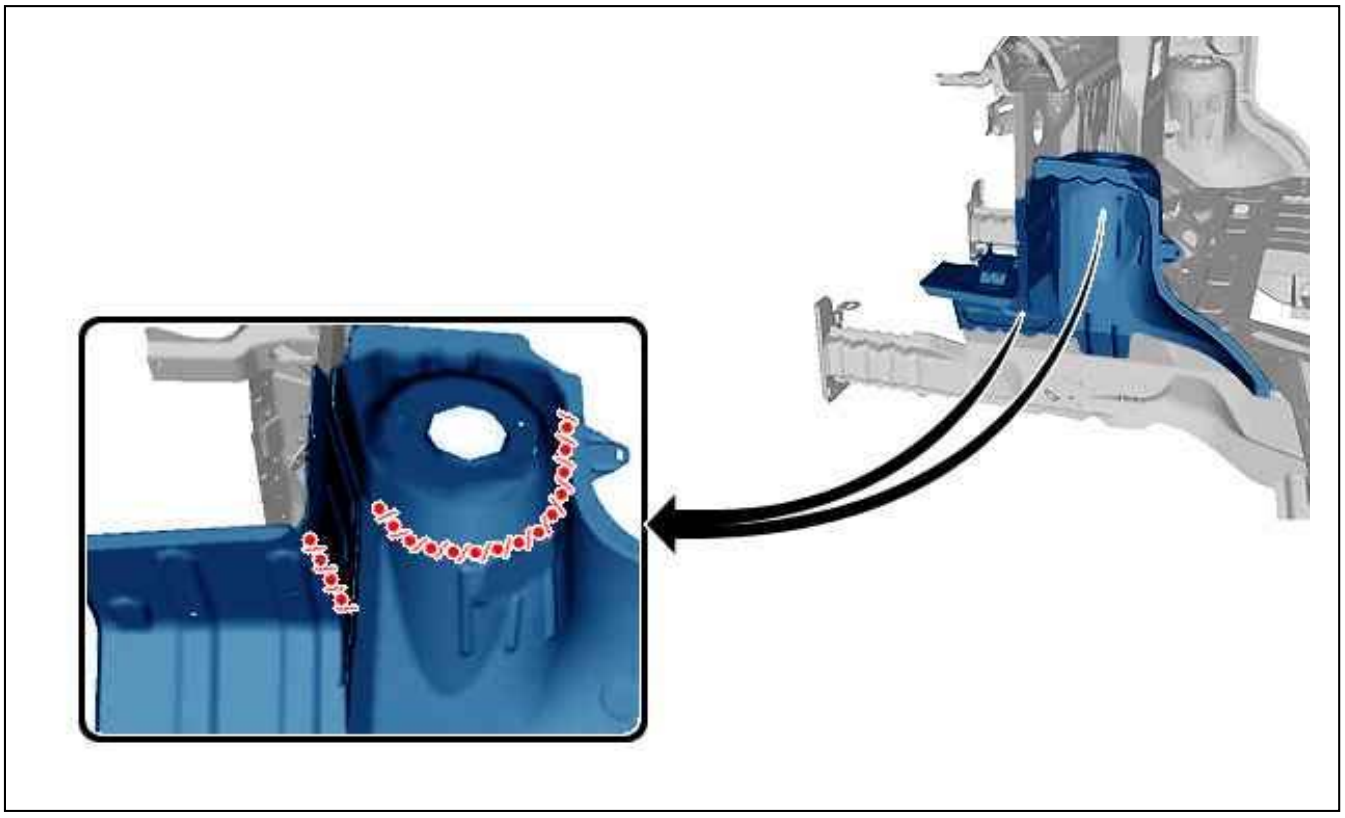

Figure : C4AP1R4D

Figure 16.
Apply a phosphate-print layer on the zone laid bare.
Apply a sealing mastic of type " A1" (see the relevant operation).

10. Protection

Paint then spray into the hollow sections, product index C5, in the repair zone (see the relevant operation).
Apply an anti-chip layer (see the relevant operation).

11. Reinitialisation

Reconnect the battery.

ESSENTIAL : Perform the operations to be carried out following reconnection of the battery.

REPLACEMENT : FRONT SCUTTLE, COMPLETE

ESSENTIAL : All of the stripped surfaces must be protected by means of the approved electrolytic rezincing process (see the relevant operation).

ESSENTIAL : Observe the elementary rules of hygiene and safety (wear a face mask to protect against fumes and vapour - work in a well ventilated space).

1. Additional operations

Disconnect the battery.
Replacement :

- Front wing inner panel assembly (left and right hand)(see the relevant operation)
- Front bulkhead crossmember assembly (see the relevant operation)

Removing - refitting :

- Battery
- windscreen
- Dashboard
- Front carpet
- Bonnet
- Front wings (left and right hand)
- front doors (left and right hand)
- The screen washer reservoir
- Front windscreen wiper mechanism
- Heating unit

Release the wiring harnesses.

2. Identification of the replacement parts

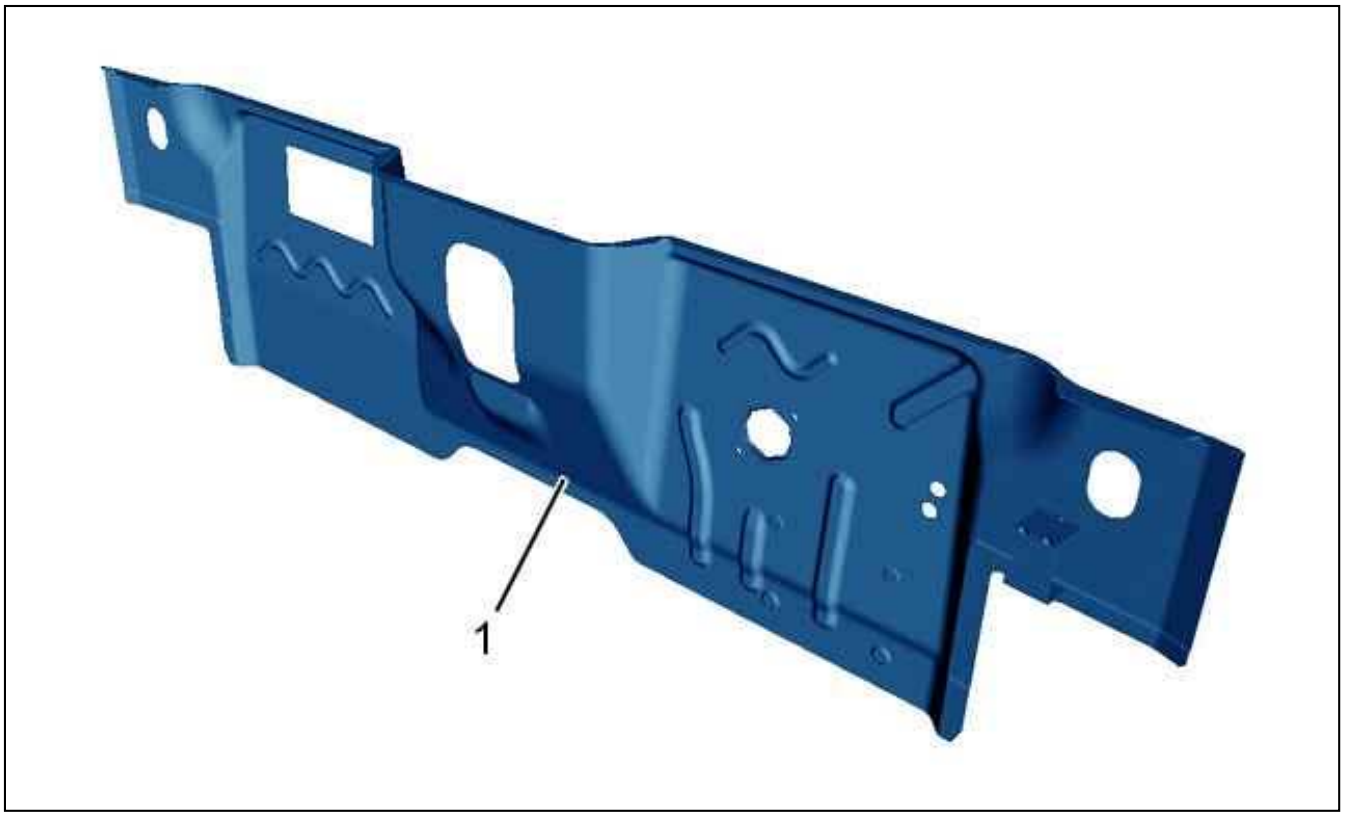

Figure : C4AP1SGD

Figure 1.
(1) Front scuttle, complete.

3. Composition of replacement parts

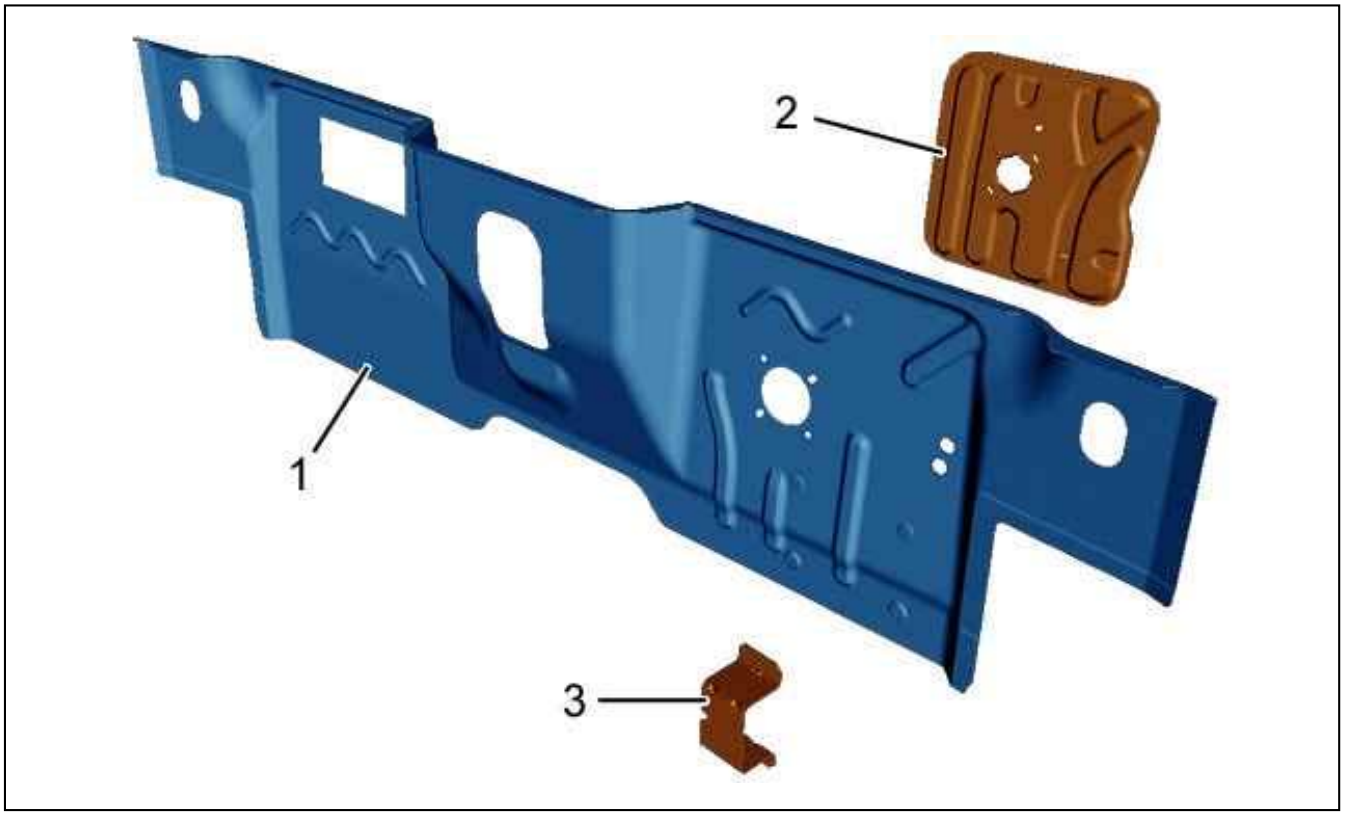

Figure : C4AP1SHD

Figure 2.
(1) Front bulkhead.
(2) Pedal bracket strengthener.
(3) Brake servo fixing support .

4. Preparation of new parts

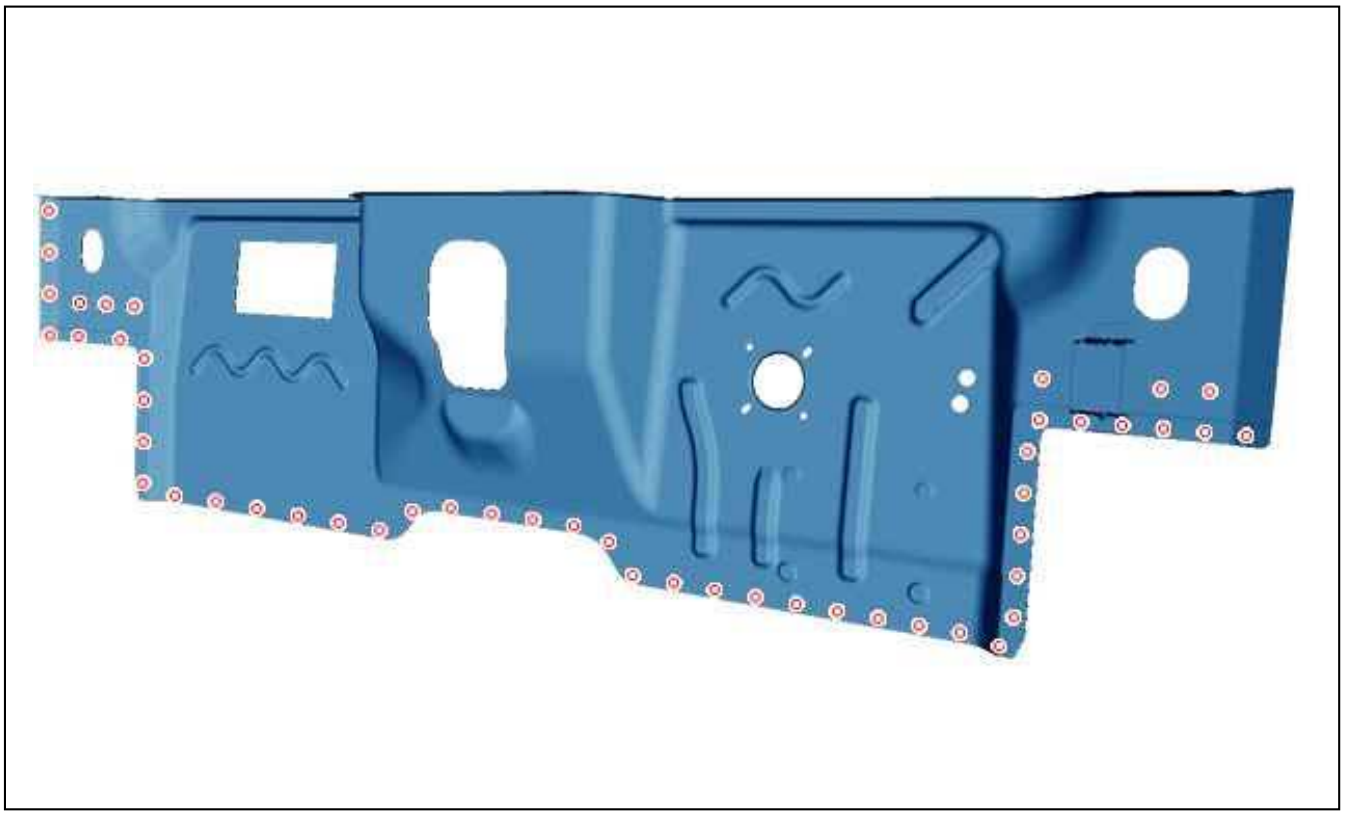

Figure : C4AP1SJD

Figure 3.
Mark then drill to Ø 6 mm for later plug welding (51 holes).
Prepare the mating edges .

5. Cutting out

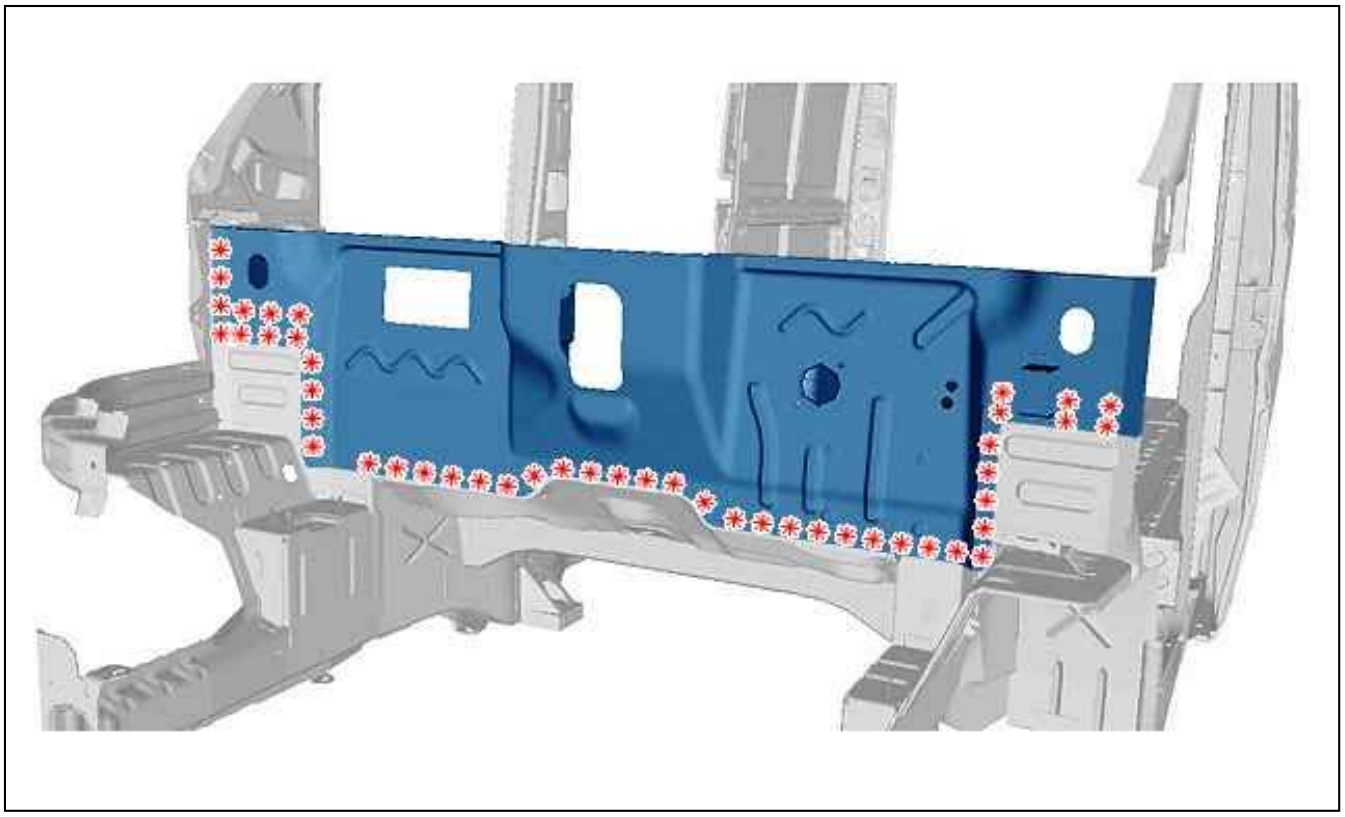

Figure : C4AP1SKD

Figure 4.
Cut out the spot welds .
Remove the front bulkhead assembly .

6. Bodywork cleaning and preparation

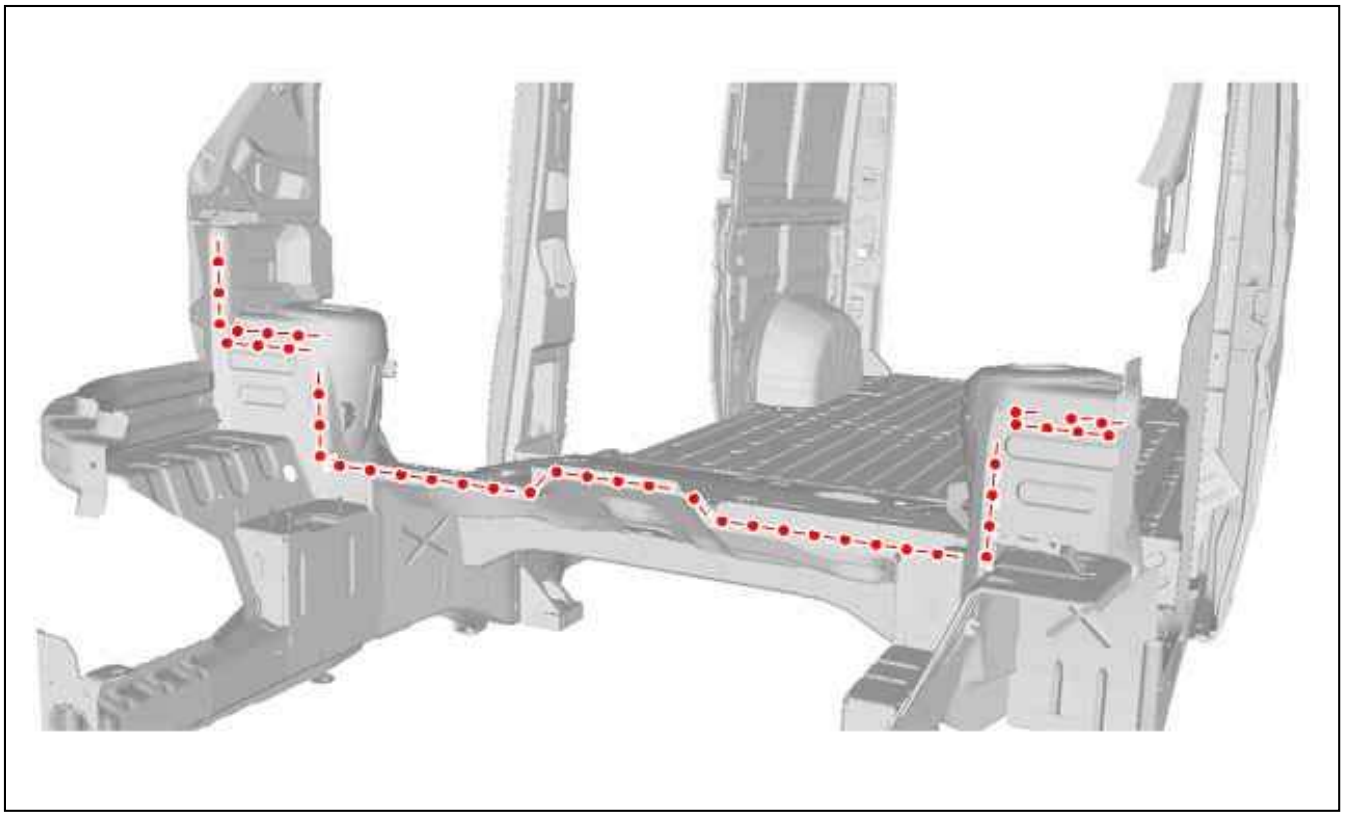

Figure : C4AP1SLD

Figure 5.
Prepare the mating edges .
Align the mating edges and protect them with a weldable primer.

7. Adjustment

Present the component for adjustment.
Check the fits and clearances (see the relevant operation).
Use the approved checking and measuring equipment.

8. Welding

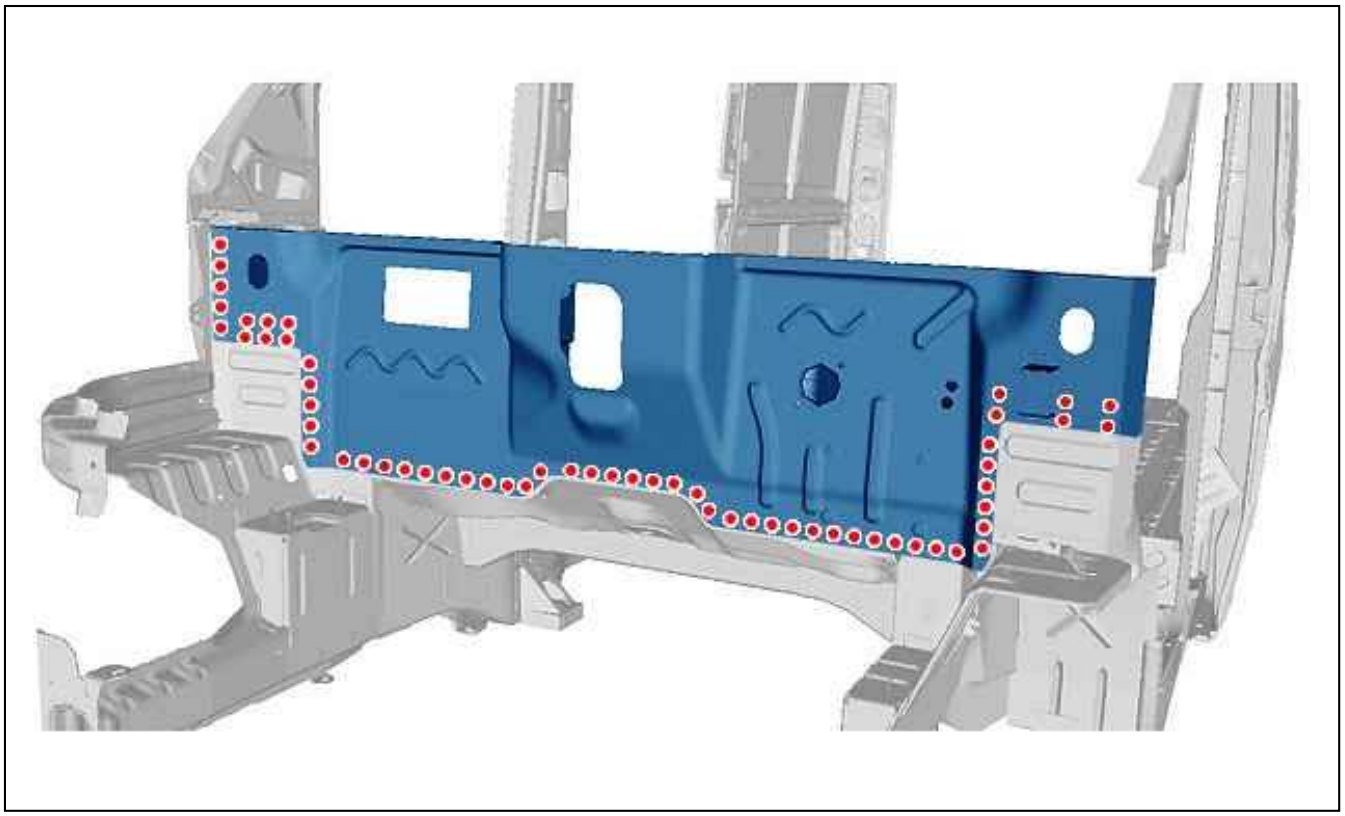

Figure : C4AP1SMD

Figure 6.
Weld with plug welds.
Grind the plug welds.

9. Sealing

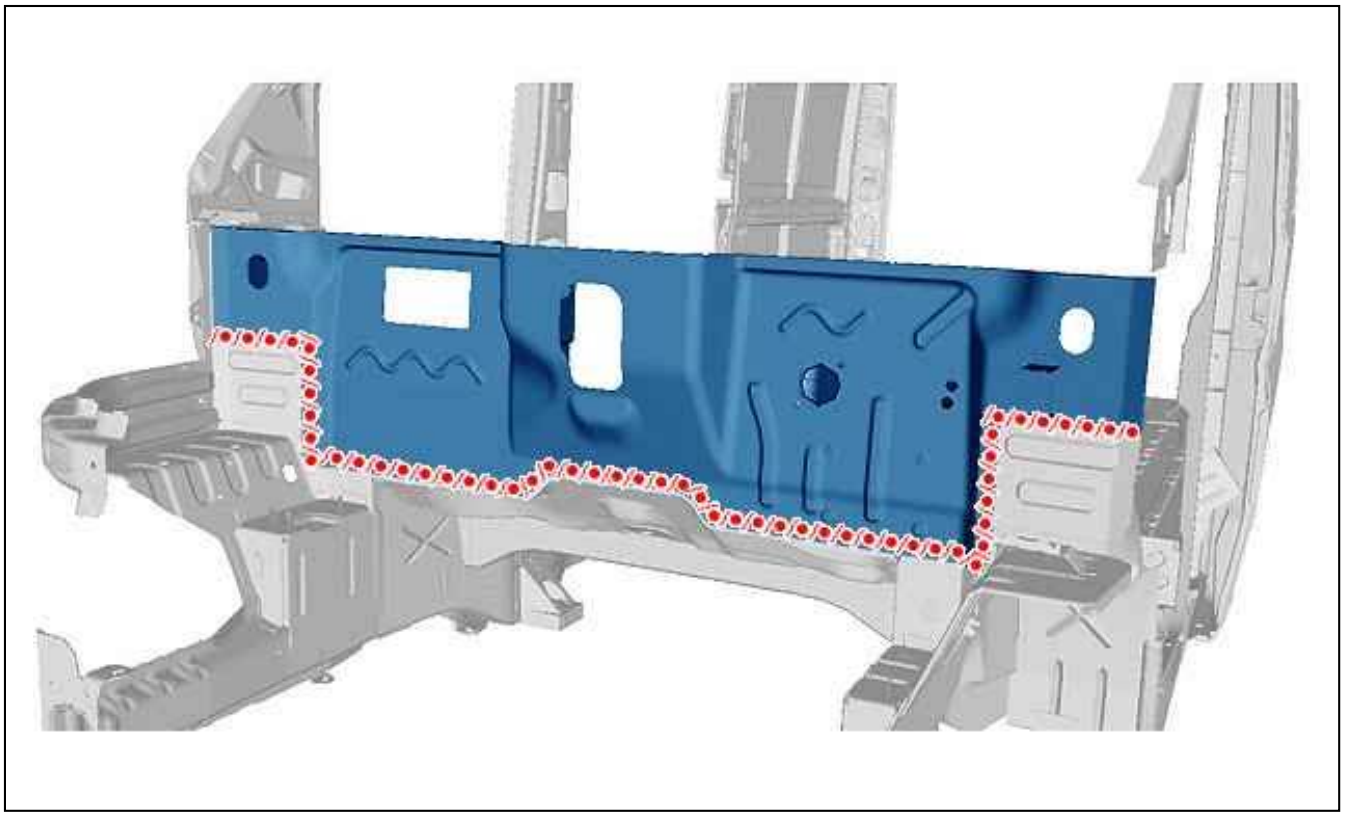

Figure : C4AP1SND

Figure 7.
Apply a phosphate-print layer to the zones laid bare.
Apply a sealing mastic of type " A4" (see the relevant operation).

10. Protection

Paint then spray into the hollow sections, product index C5, in the repair zone (see the relevant operation).

11. Reinitialisation

Reconnect the battery.

ESSENTIAL : Perform the operations to be carried out following reconnection of the battery.

REPLACEMENT : PARTIAL CHASSIS MEMBER CLOSING PANEL

ESSENTIAL : All of the stripped surfaces must be protected by means of the approved electrolytic rezincing process (see the relevant operation).

ESSENTIAL : Observe the elementary rules of hygiene and safety (wear a face mask to protect against fumes and vapour - work in a well ventilated space).

1. Additional operations

Disconnect the battery.
Replacement :

- Partial front half-panel inner panel (see the relevant operation)
- Front panel support (see the relevant operation)

Release the wiring harnesses.

2. Identification of the replacement parts

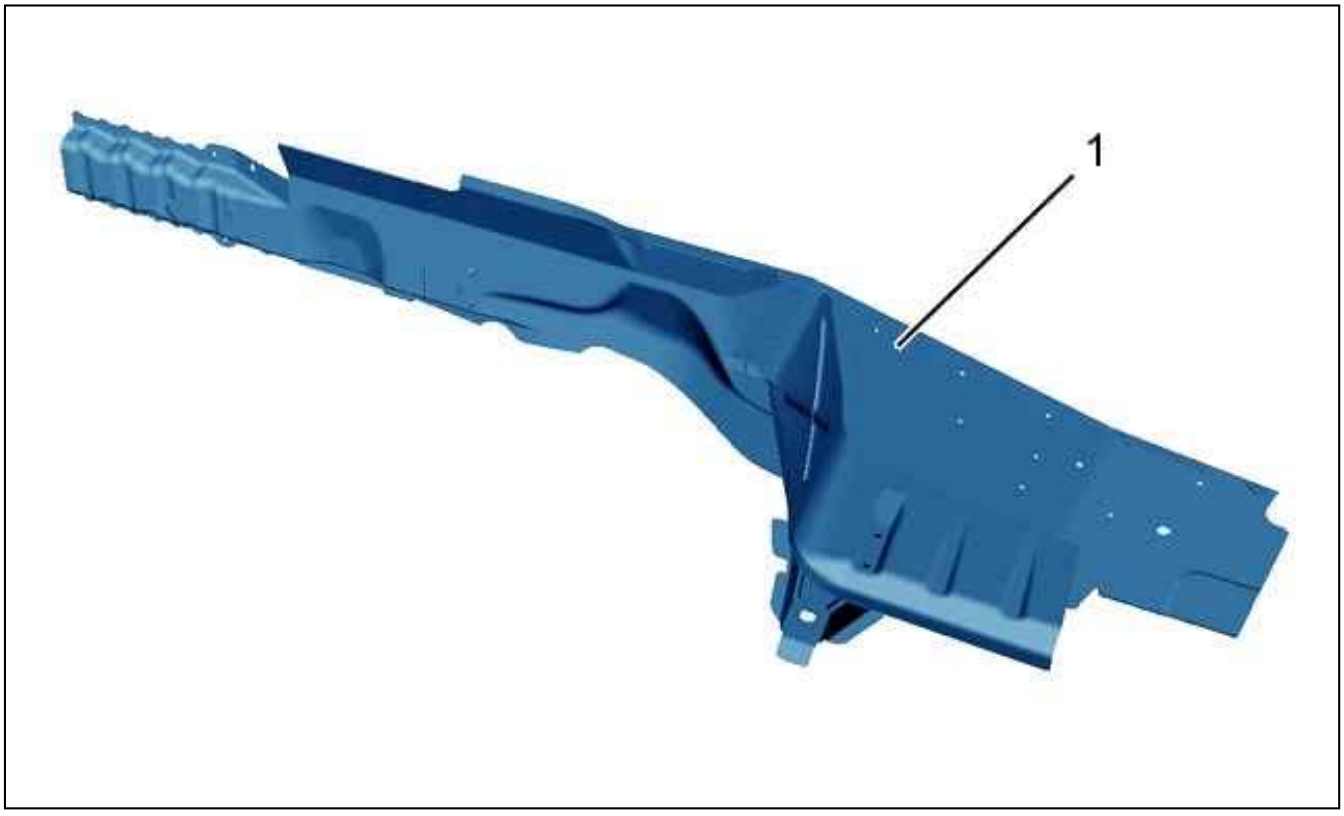

Figure : C4AP1RTD

Figure 1.
(1) Chassis member closing panel assembly .

3. Composition of the replacement parts

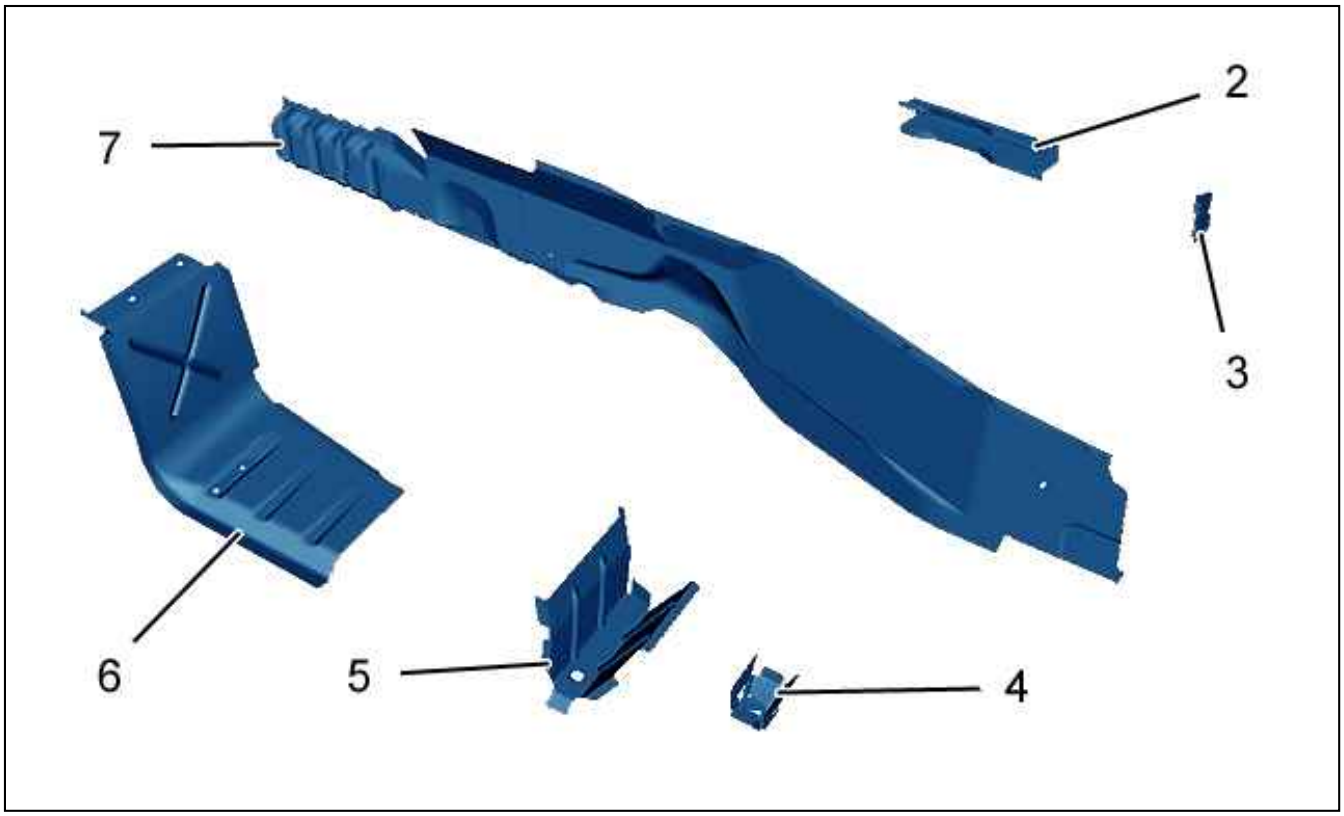

Figure : C4AP1RUD

Figure 2.
(2) Chassis member closing panel strengthener .
(3) Inflating insert .
(4) Additional heating front support .
(5) Additional heating support strengthener .
(6) Front sill panel .
(7) Side sill closure panel.

4. Preparation of the replacement parts

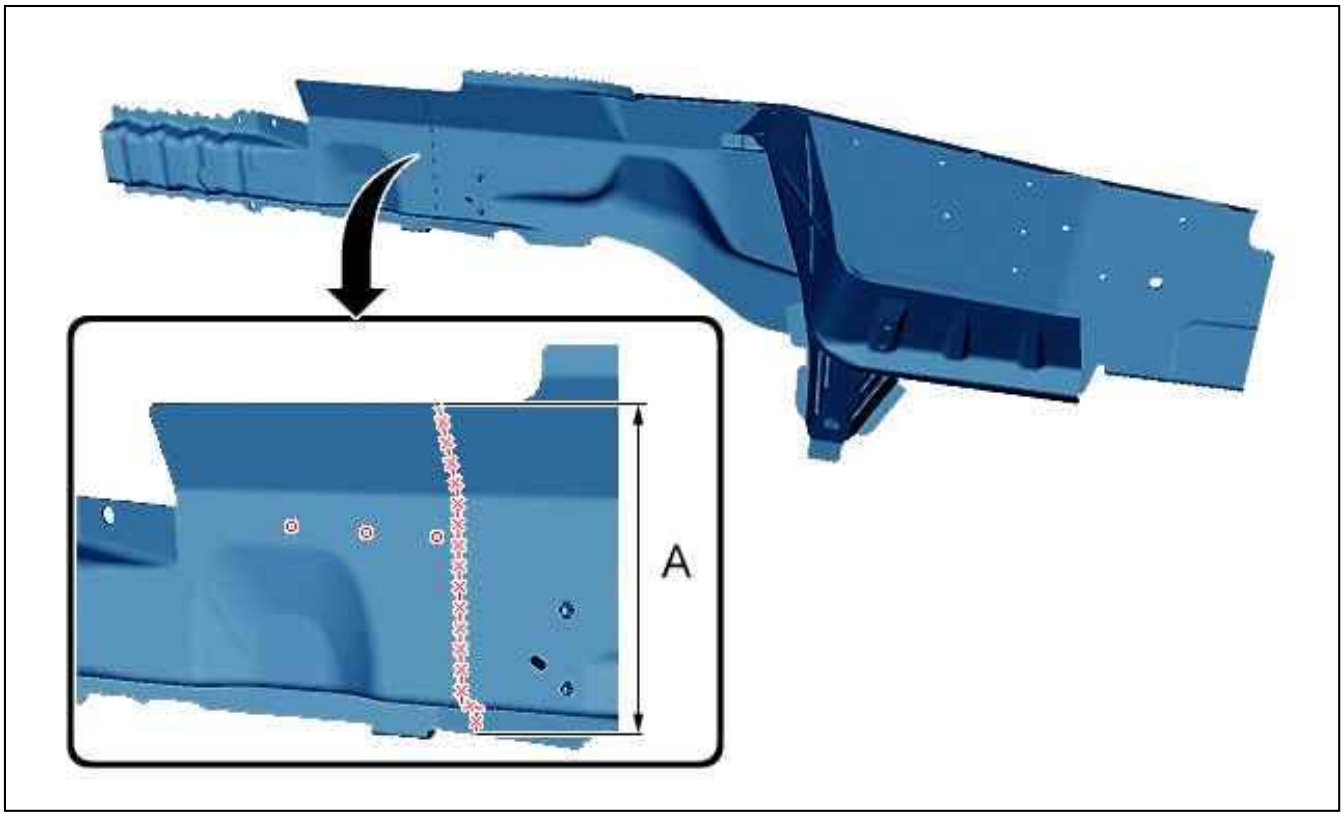

Figure : C4AP1RVD

Figure 3.
Mark then cut (final cutting).
Mark then drill to Ø 10 mm for later plug welding (3 holes).
Prepare the mating edges .

5. Cutting out

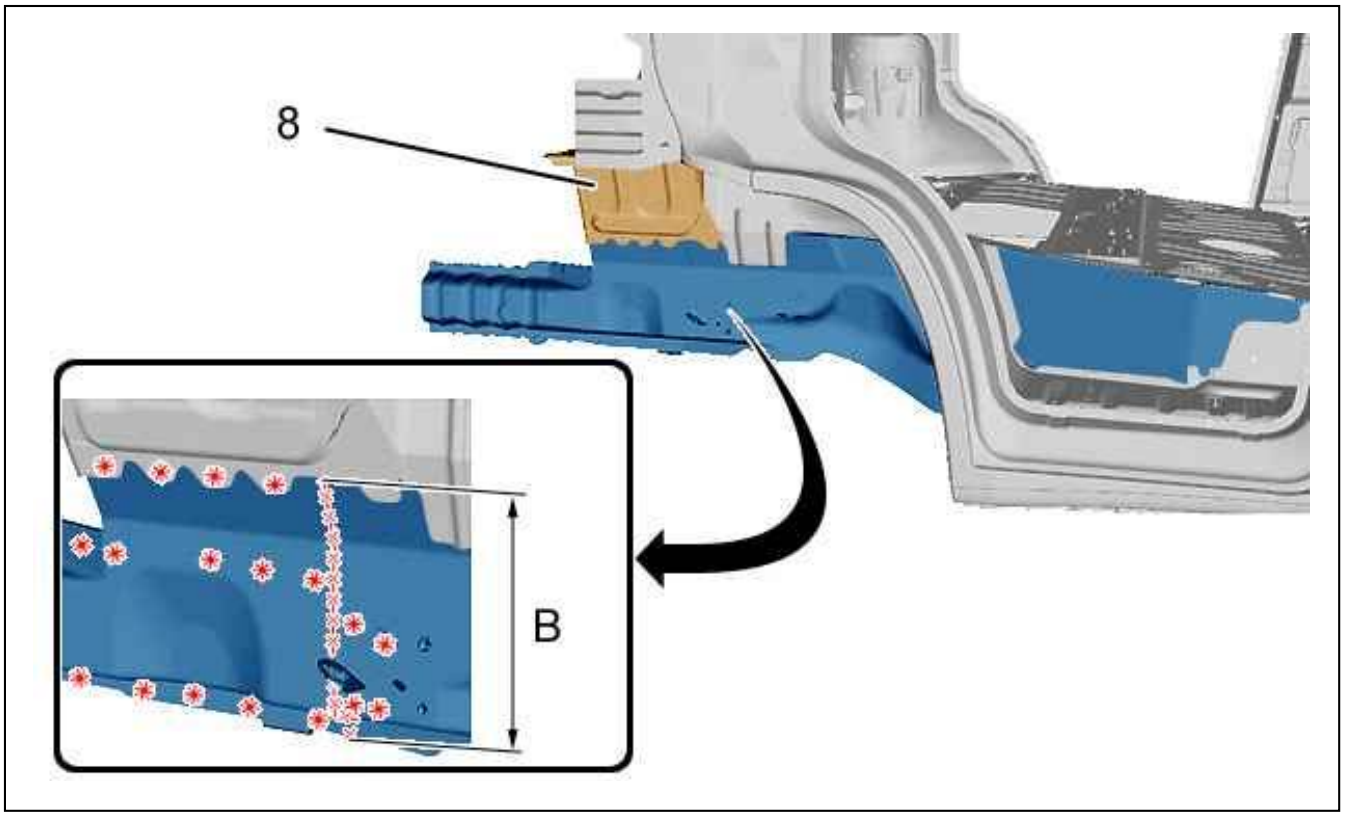

Figure : C4AP1RWD

Figure 4.
Cut out the spot welds .
Move aside the front chassis member connection panel (8).

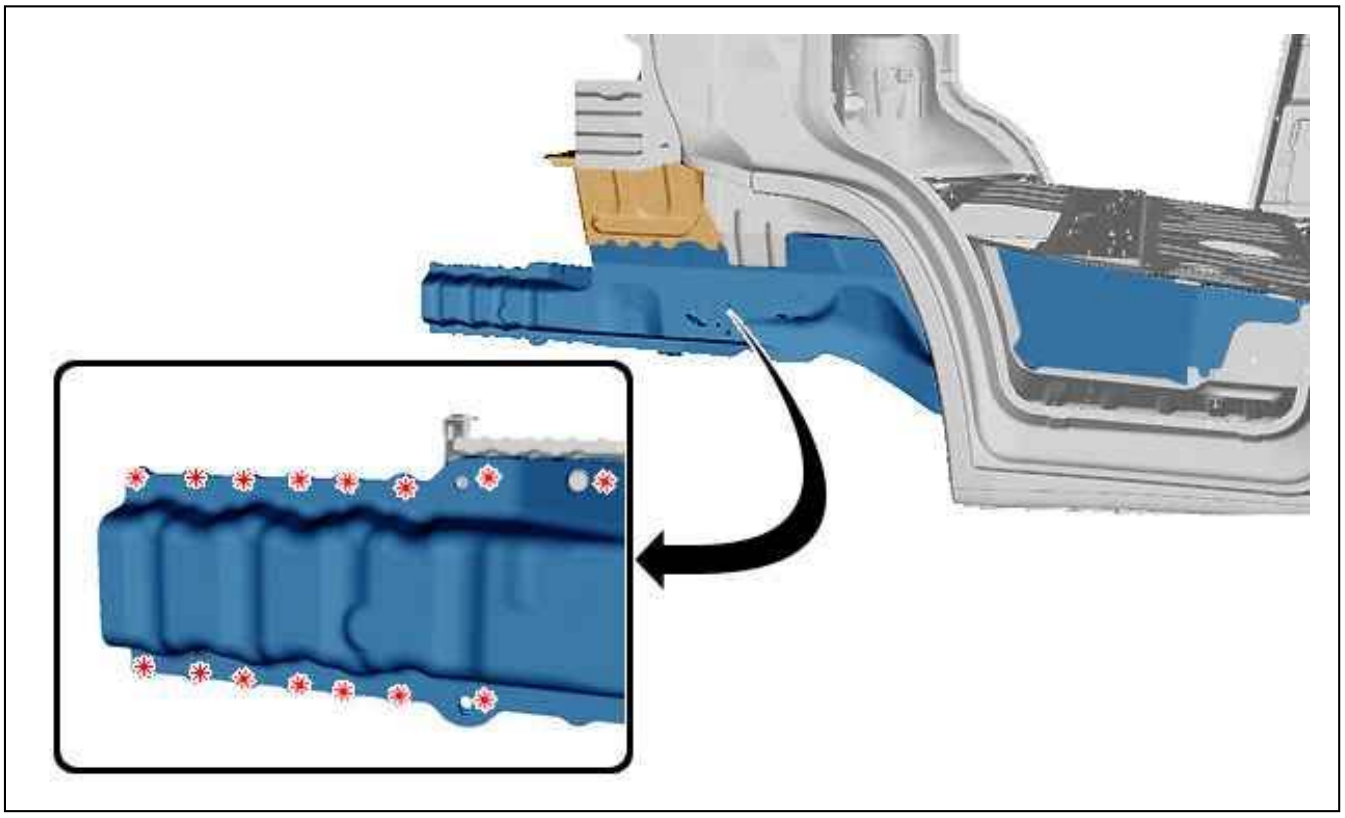

Figure : C4AP1RXD

Figure 5.
Cut out the spot welds .

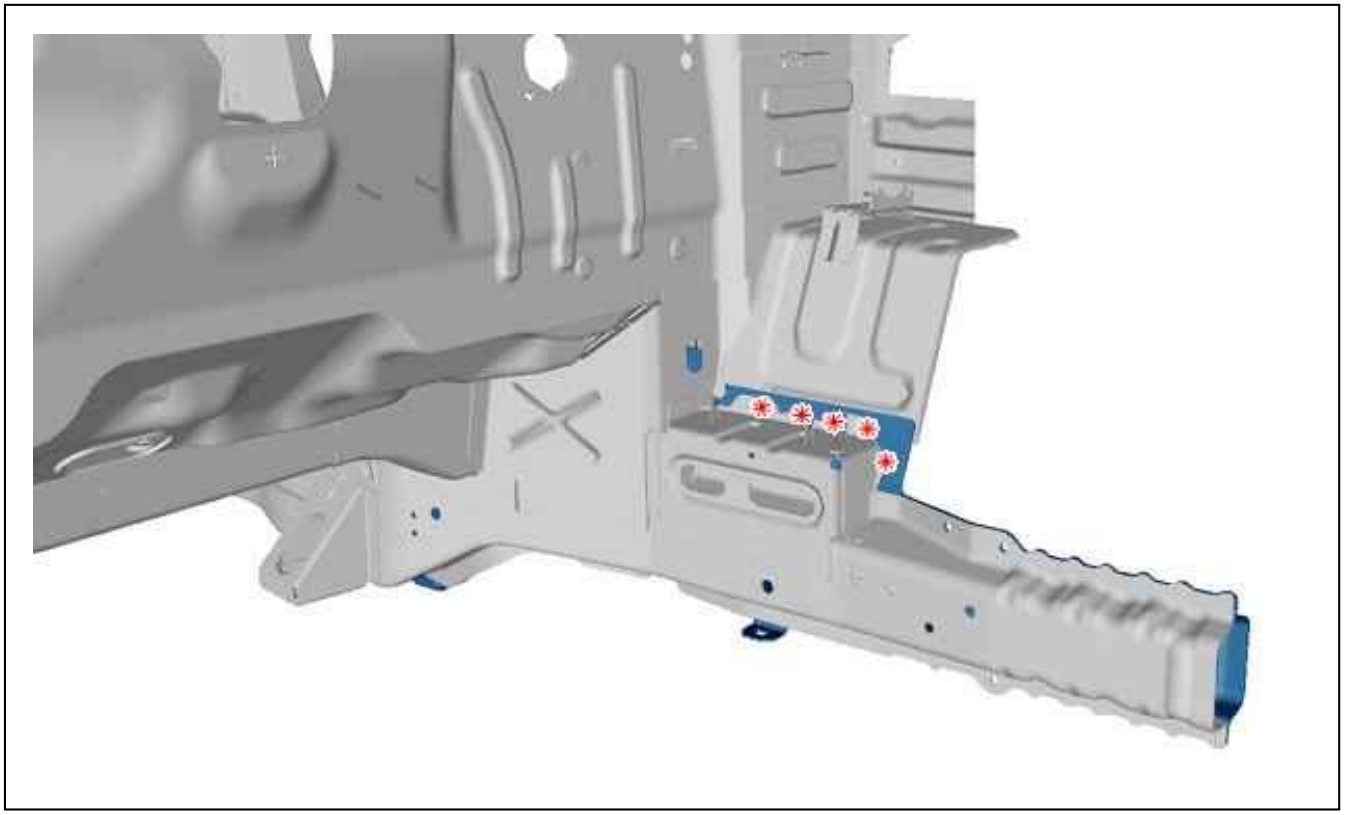

Figure : C4AP1RYD

Figure 6.
Cut out the spot welds .
Remove the partial chassis member closing panel.

6. Bodywork cleaning and preparation

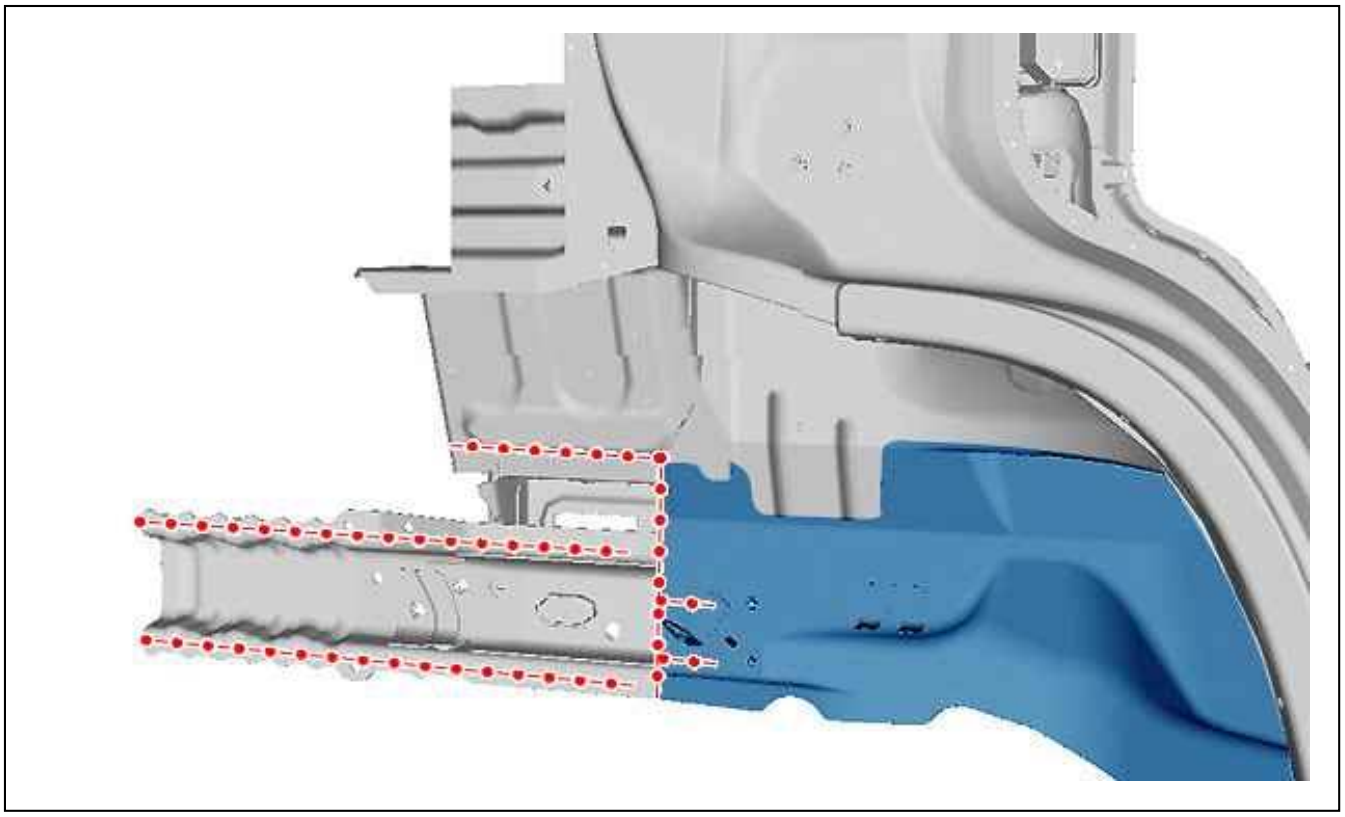

Figure : C4AP1RZD

Figure 7.
Prepare the mating edges .
Align the mating edges and protect them with a weldable primer.

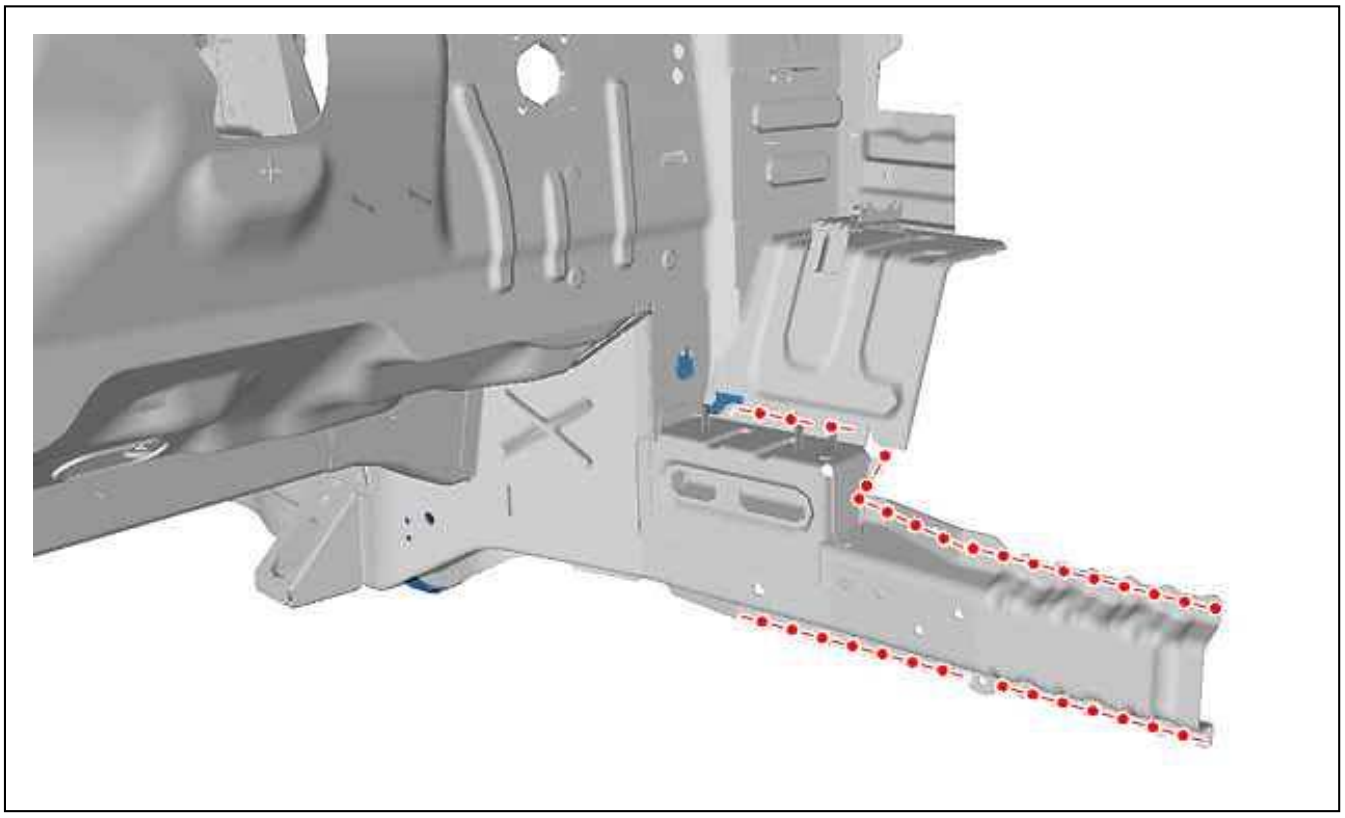

Figure : C4AP1S0D

Figure 8.
Prepare the mating edges .
Align the mating edges and protect them with a weldable primer.

7. Adjustment

Present the elements, allowing for adjustment.
Check the fits and clearances (see the relevant operation).
Use the approved checking and measuring equipment.

8. Welding

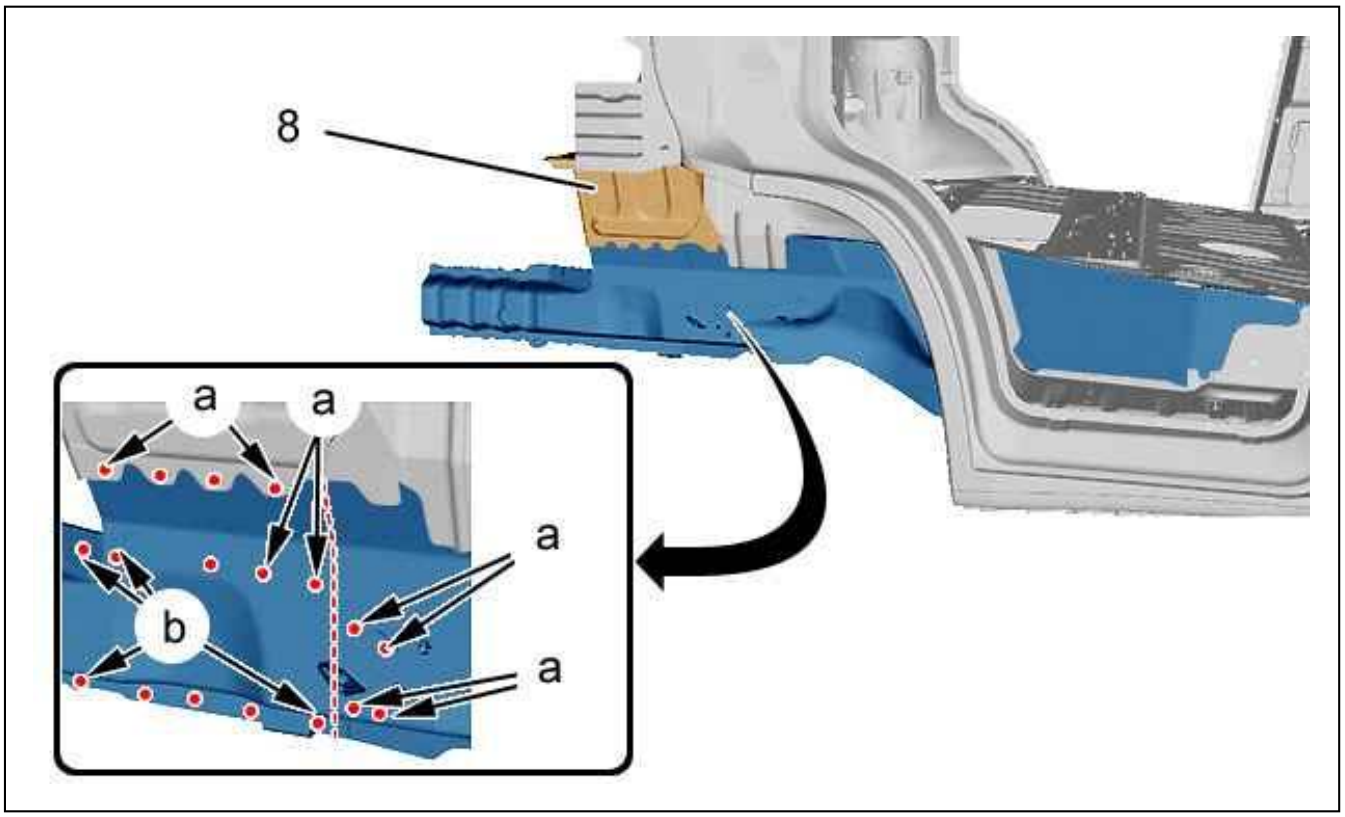

Figure : C4AP1S1D

Figure 9.
Position the front chassis member connection panel (8).
Weld using successive beads (MIG or MAG).
Grind the welds.
Weld with MIG or MAG spot welds (at "a").
Grind the spot welds.
Weld with electric spot welds (at "b").

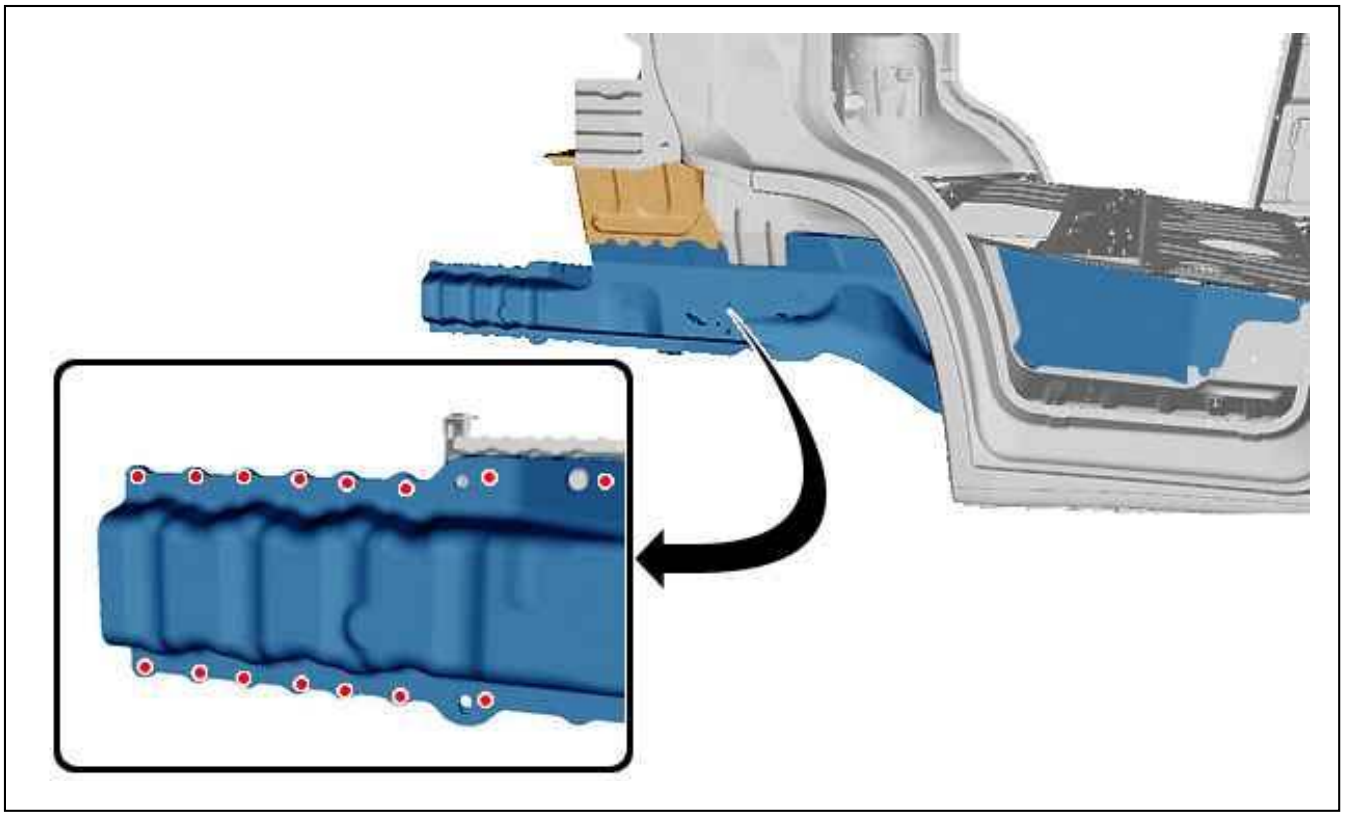

Figure : C4AP1S2D

Figure 10.
Weld with electric spot welds.

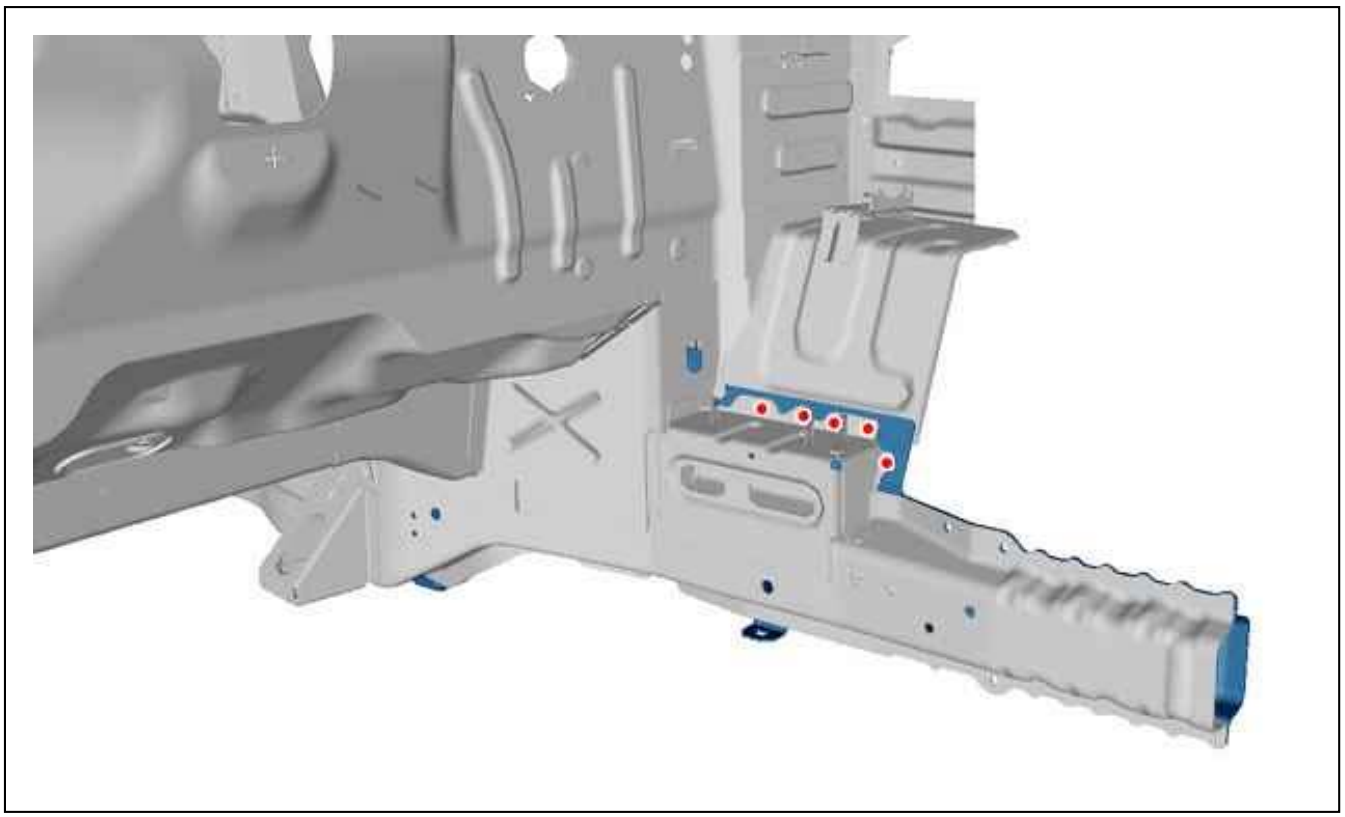

Figure : C4AP1S3D

Figure 11.

Weld with MIG or MAG spot welds.
Grind the spot welds.

9. Sealing

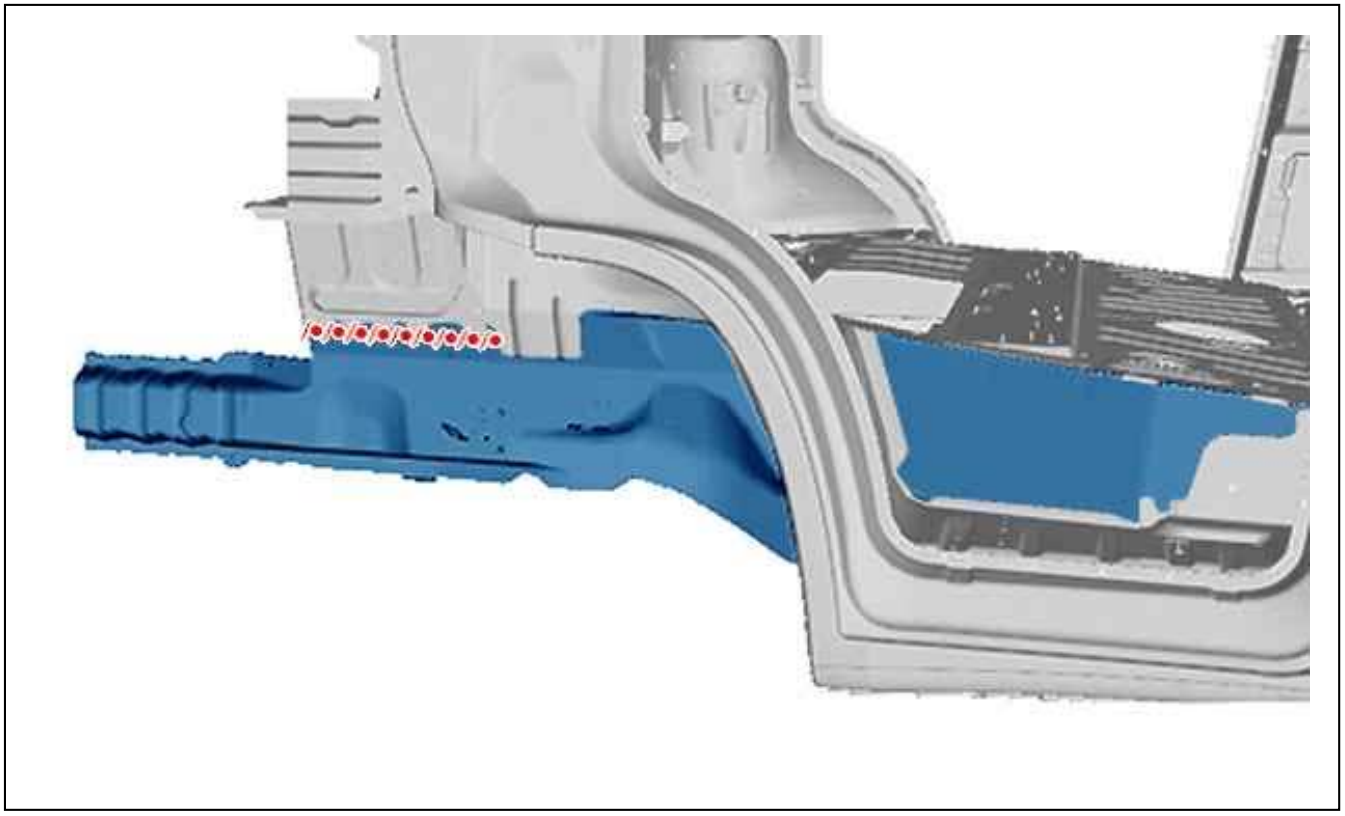

Figure : C4AP1S4D

Figure 12.
Apply a phosphate-print layer on the zone laid bare.
Apply a sealing mastic of type " A1" (see the relevant operation).

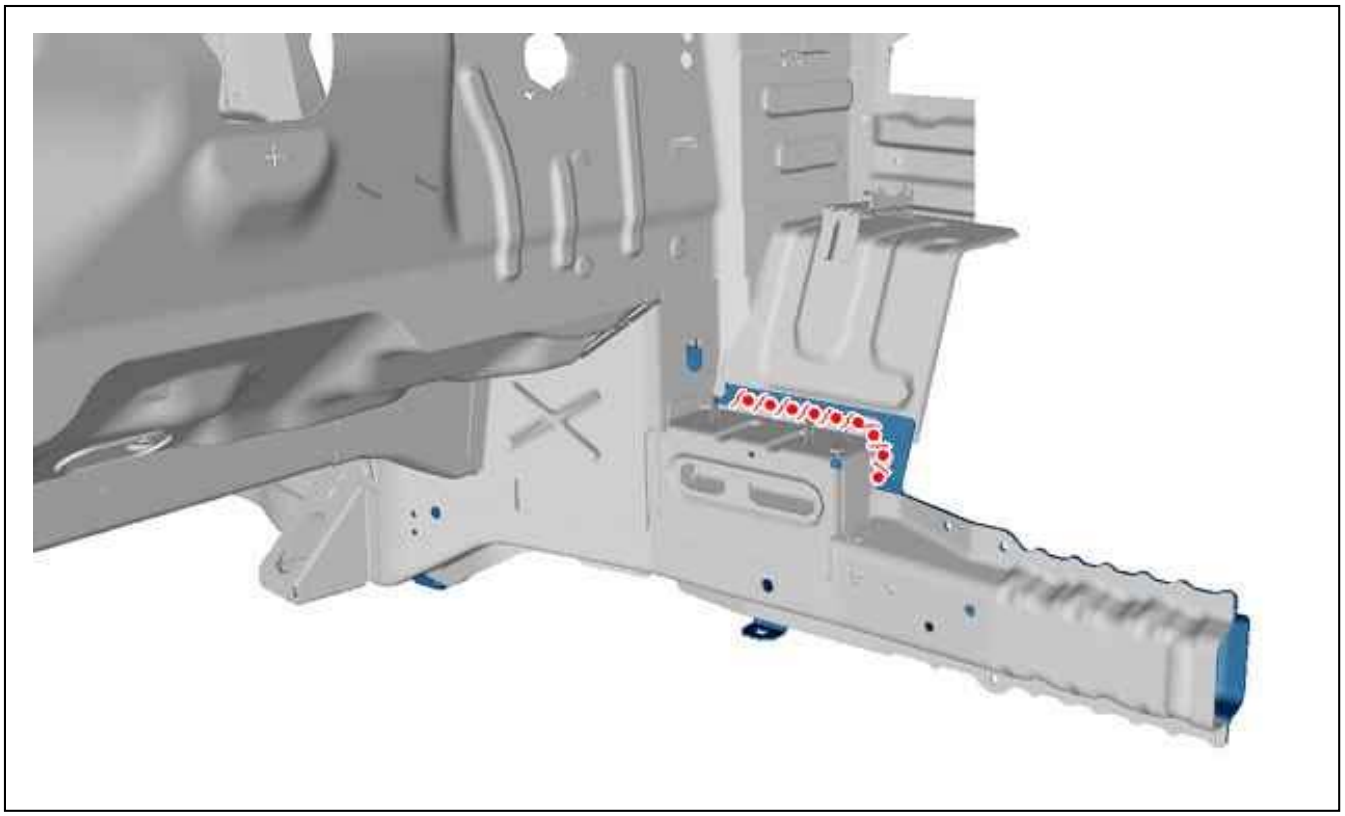

Figure : C4AP1S5D

Figure 13.
Apply a phosphate-print layer on the zone laid bare.
Apply a sealing mastic of type " A1" (see the relevant operation).

10. Protection

Paint then spray into the hollow sections, product index C5, in the repair zone (see the relevant operation).

11. Reinitialisation

Reconnect the battery.

ESSENTIAL : Perform the operations to be carried out following reconnection of the battery.

REPLACEMENT : FRONT BULKHEAD CROSSMEMBER ASSEMBLY

ESSENTIAL : All of the stripped surfaces must be protected by means of the approved electrolytic rezincing process (see the relevant operation).

ESSENTIAL : Observe the elementary rules of hygiene and safety (wear a face mask to protect against fumes and vapour - work in a well ventilated space).

1. Additional operations

Disconnect the battery.
Removing - refitting :

- The windscreen
- The bonnet
- The front wings
- The windscreen wiper mechanism
- The front bumper
- The headlamps
- The front panel upper crossmember
- The dashboard cross member

Stripping-assembling :

- The fascia
- The screen pillar trim pads
- The front splash shields
- The front scuttle pillar linings

Release the wiring harnesses.

2. Identification of replacement parts

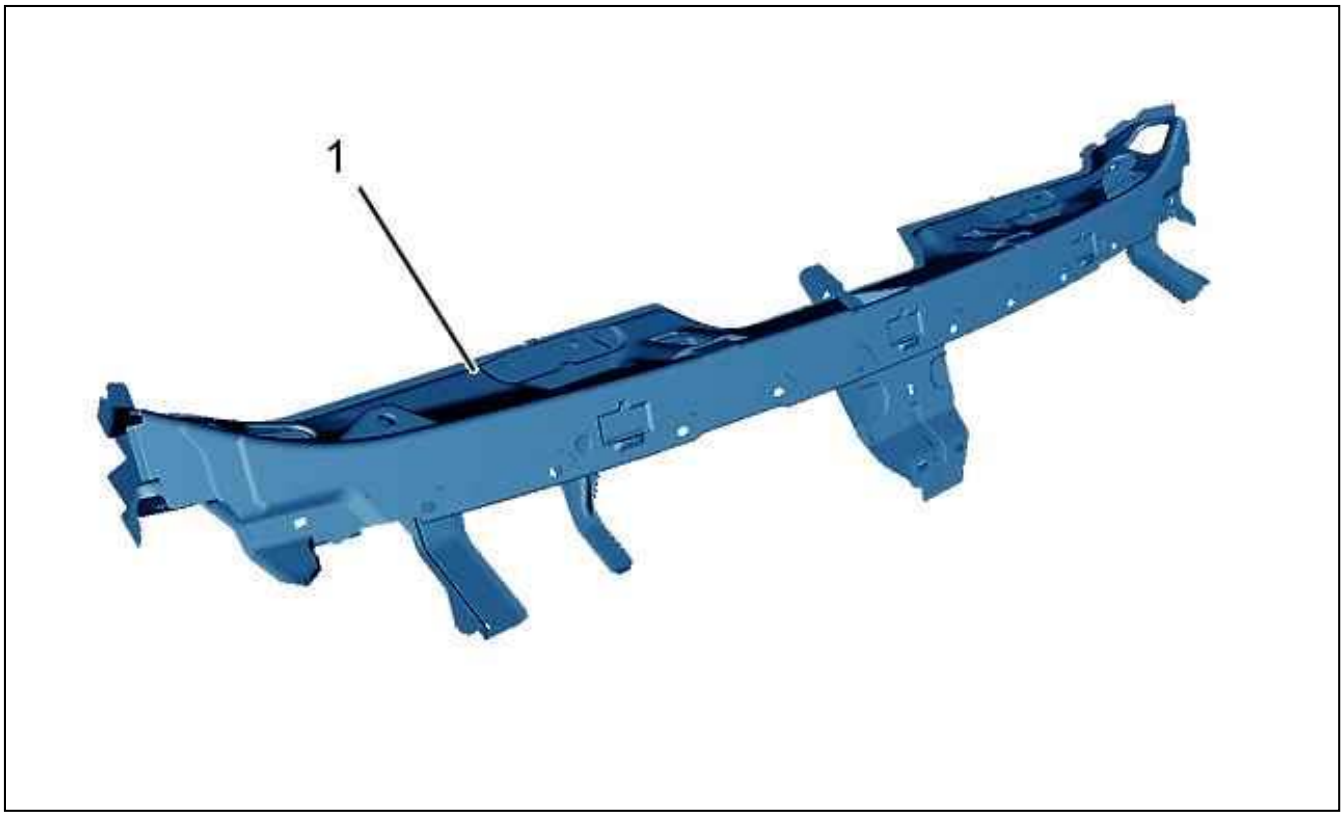

Figure : C4AP1S6D

Figure 1.
(1) Front bulkhead crossmember assembly .

3. Composition of the replacement parts

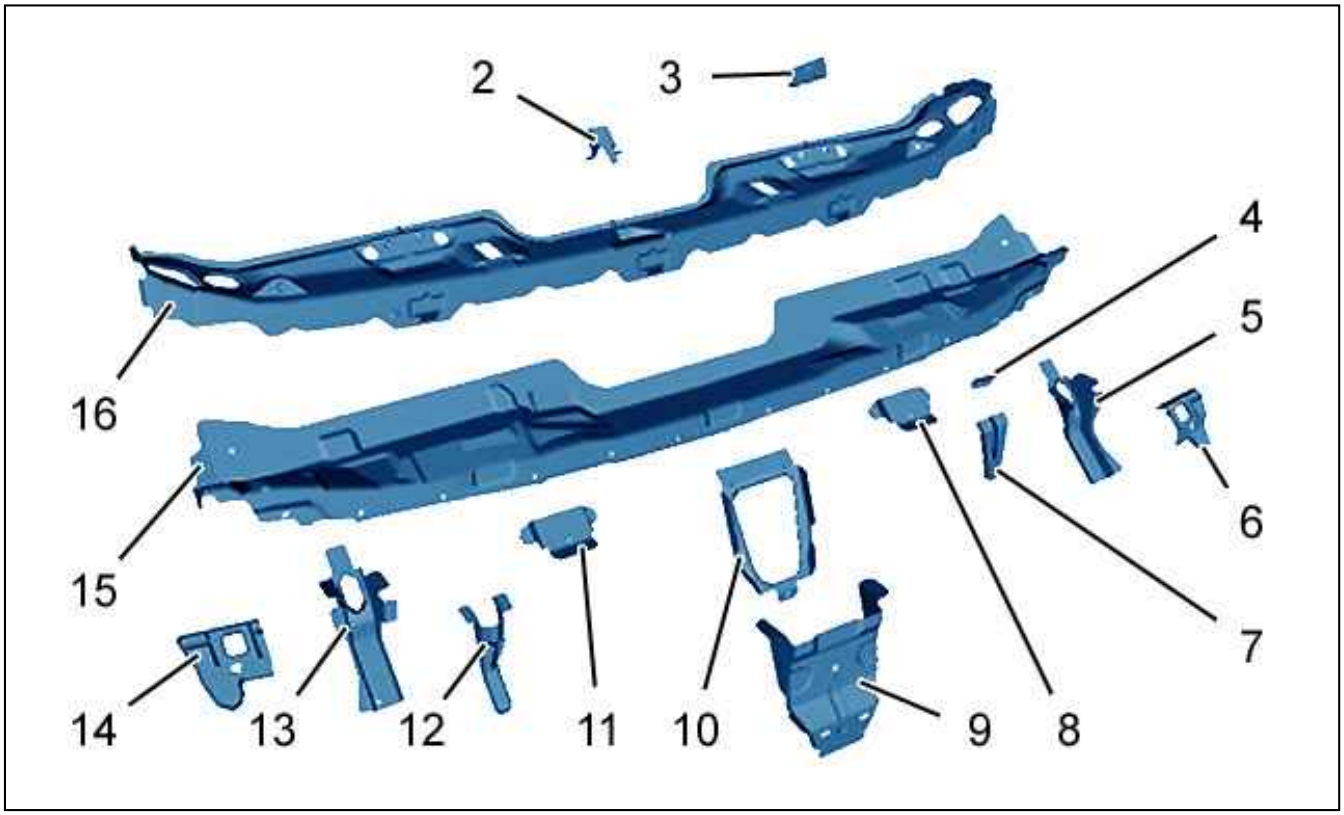

Figure : C4AP1S7D

Figure 2.
(2) Dashboard central fixing .
(3) Serial number support .
(4) Windscreen wiper mechanism strengthener .
(5) Bonnet fixing support .
(6) Side support .
(7) Windscreen wiper mechanism fixing .
(8) Dashboard side fixing .
(9) Windscreen wiper mechanism central fixing .
(10) Central support .
(11) Dashboard side fixing .
(12) Central air duct side fixing .
(13) Bonnet fixing support .
(14) Side support .
(15) Lower part of the front bulkhead crossmember .
(16) Upper part of the front bulkhead crossmember .

4. Preparation of the replacement parts

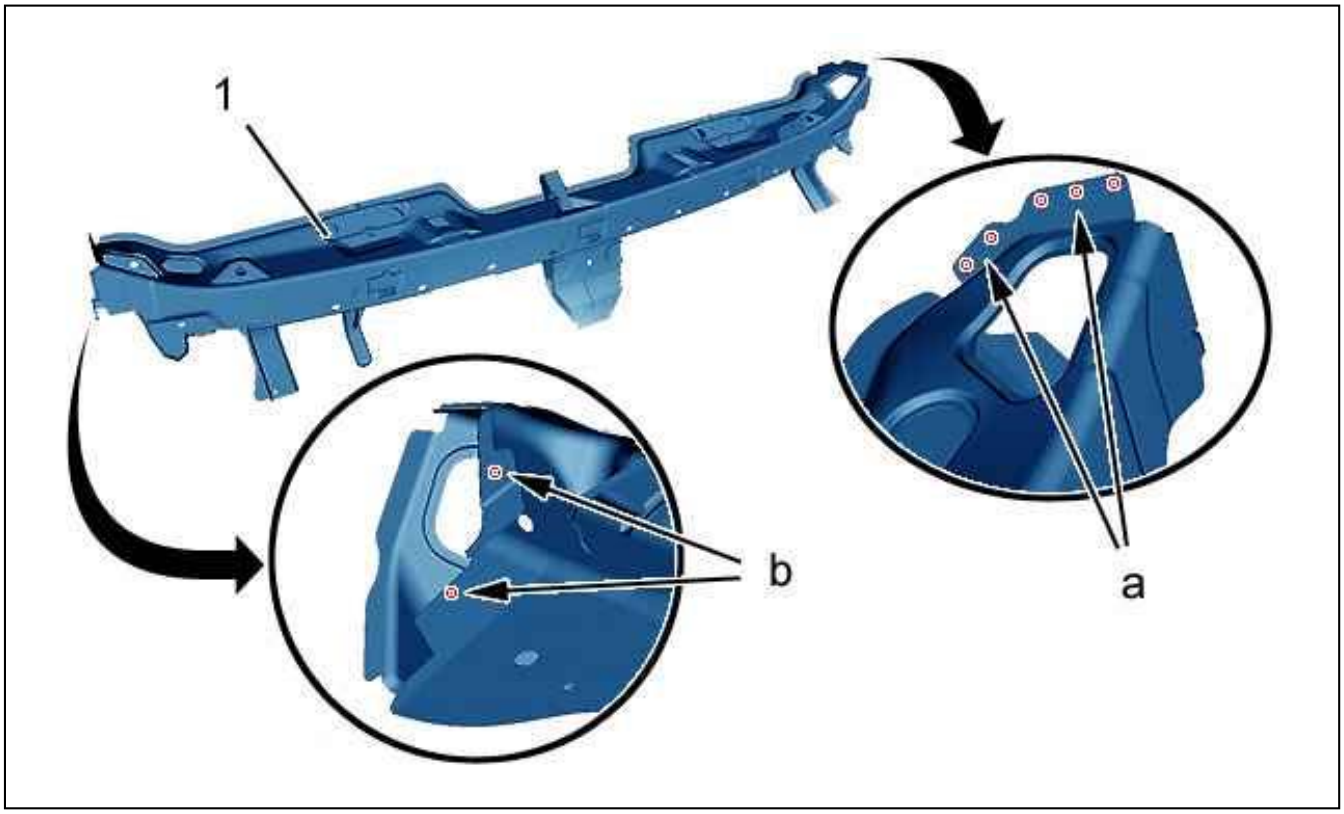

Figure : C4AP1S8D

Figure 3.
(1) Front bulkhead crossmember assembly .
Mark then drill to Ø 6 mm for later plug welding (14 holes).
Repeat the operation on the opposite side (following "a").
Repeat the operation on the opposite side (following "b").
Prepare the mating edges .

5. Cutting out

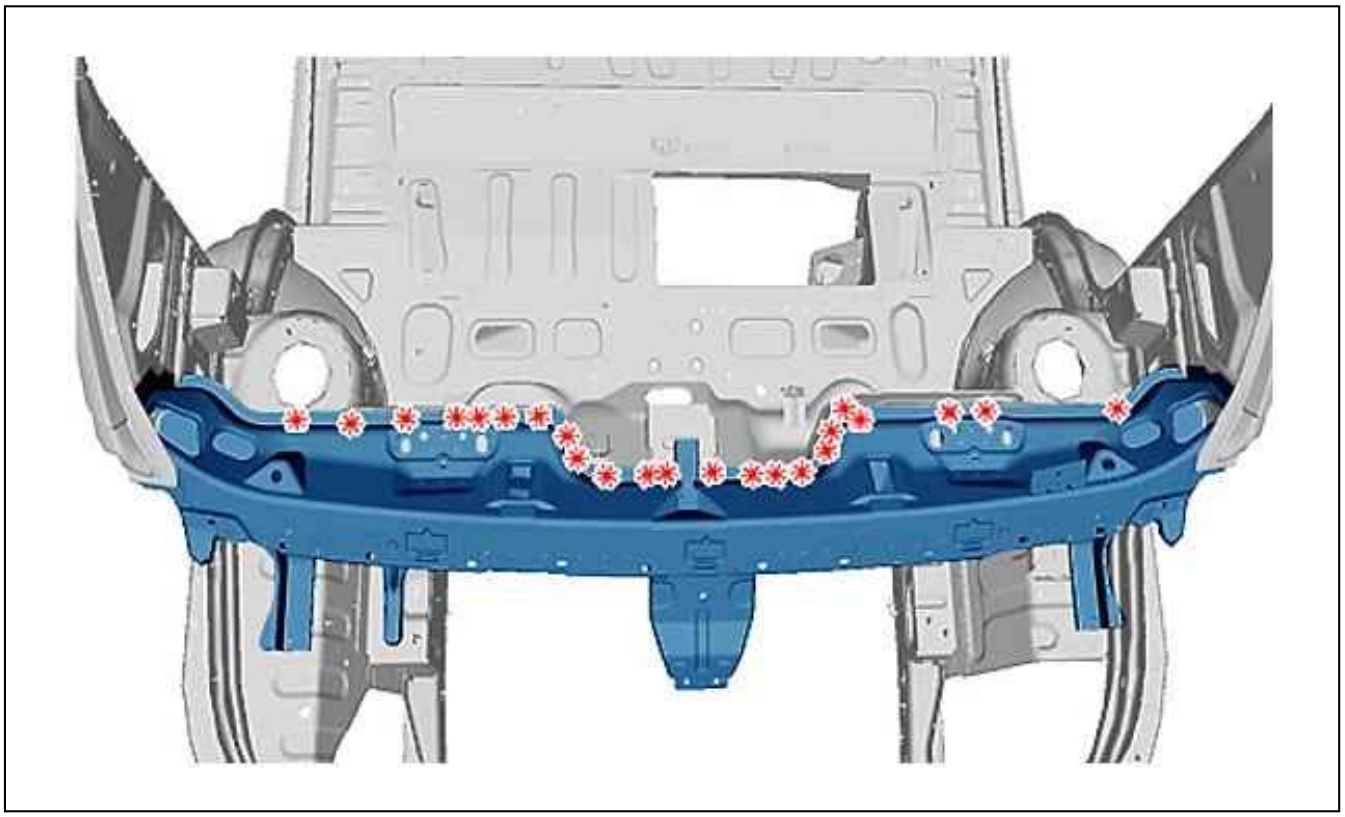

Figure : C4AP1S9D

Figure 4.
Cut out the spot welds .

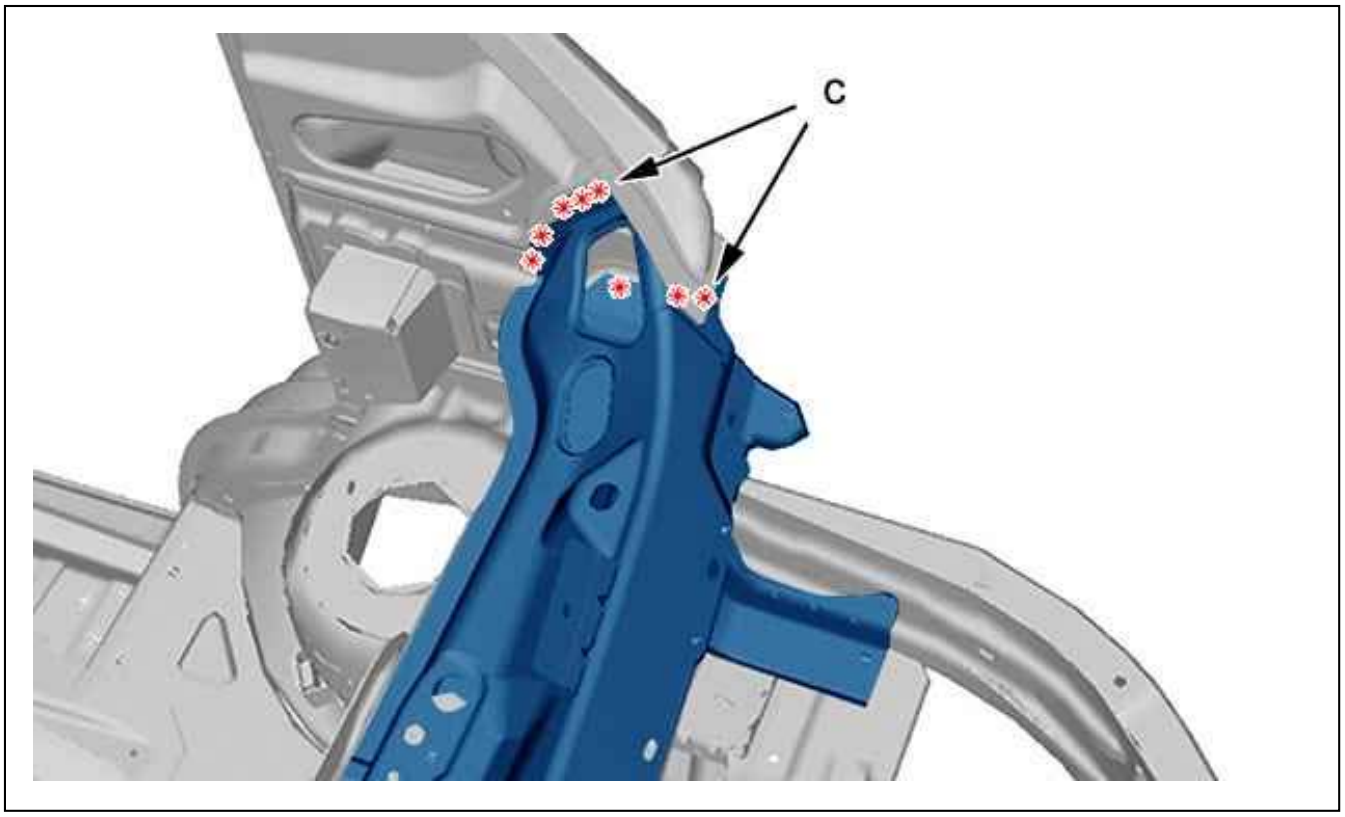

Figure : C4CP20SD

Figure 5.
Cut out the spot welds .
Repeat the operation on the opposite side (following "c").

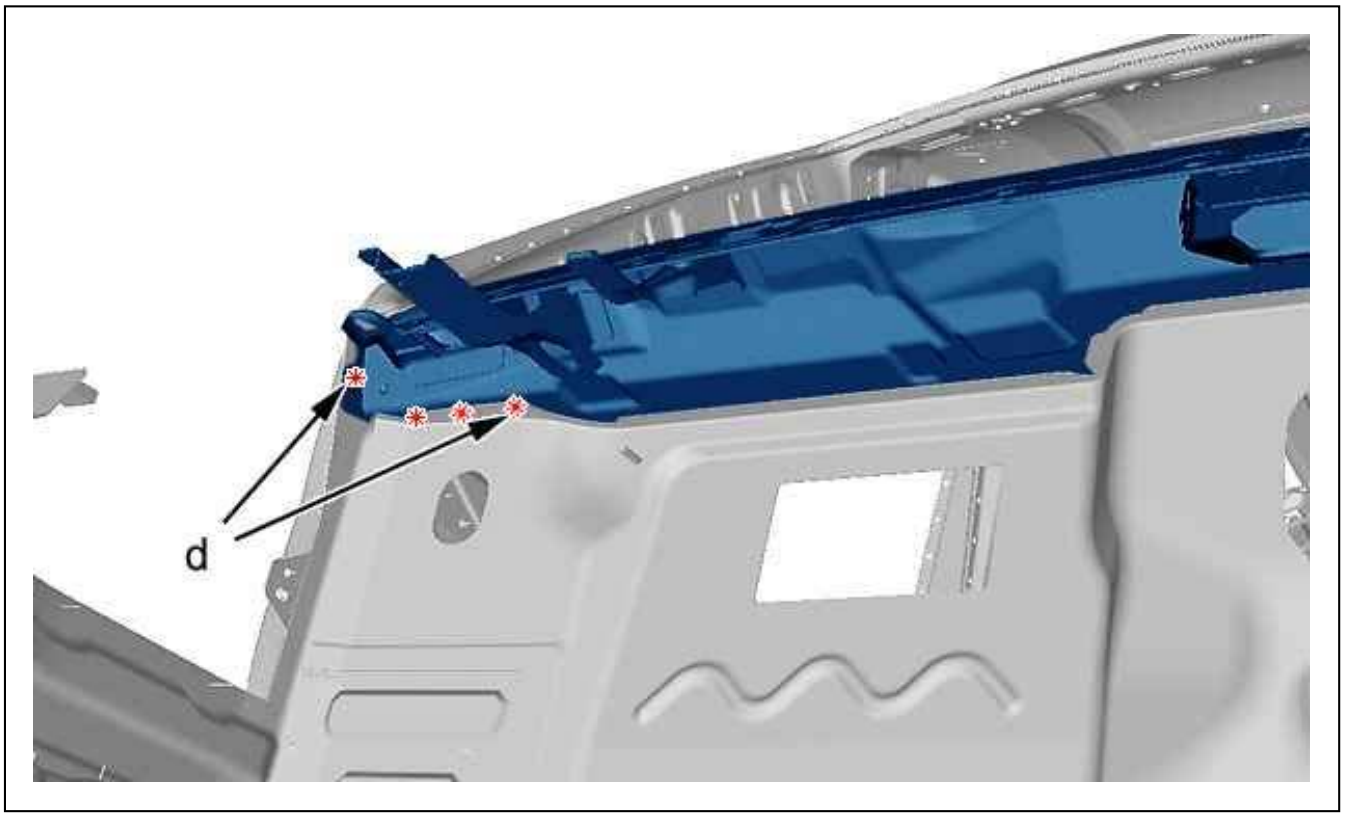

Figure : C4AP1SAD

Figure 6.
Cut out the spot welds .
Repeat the operation on the opposite side (following "d").
Remove the front bulkhead crossmember assembly .

6. Bodywork cleaning and preparation

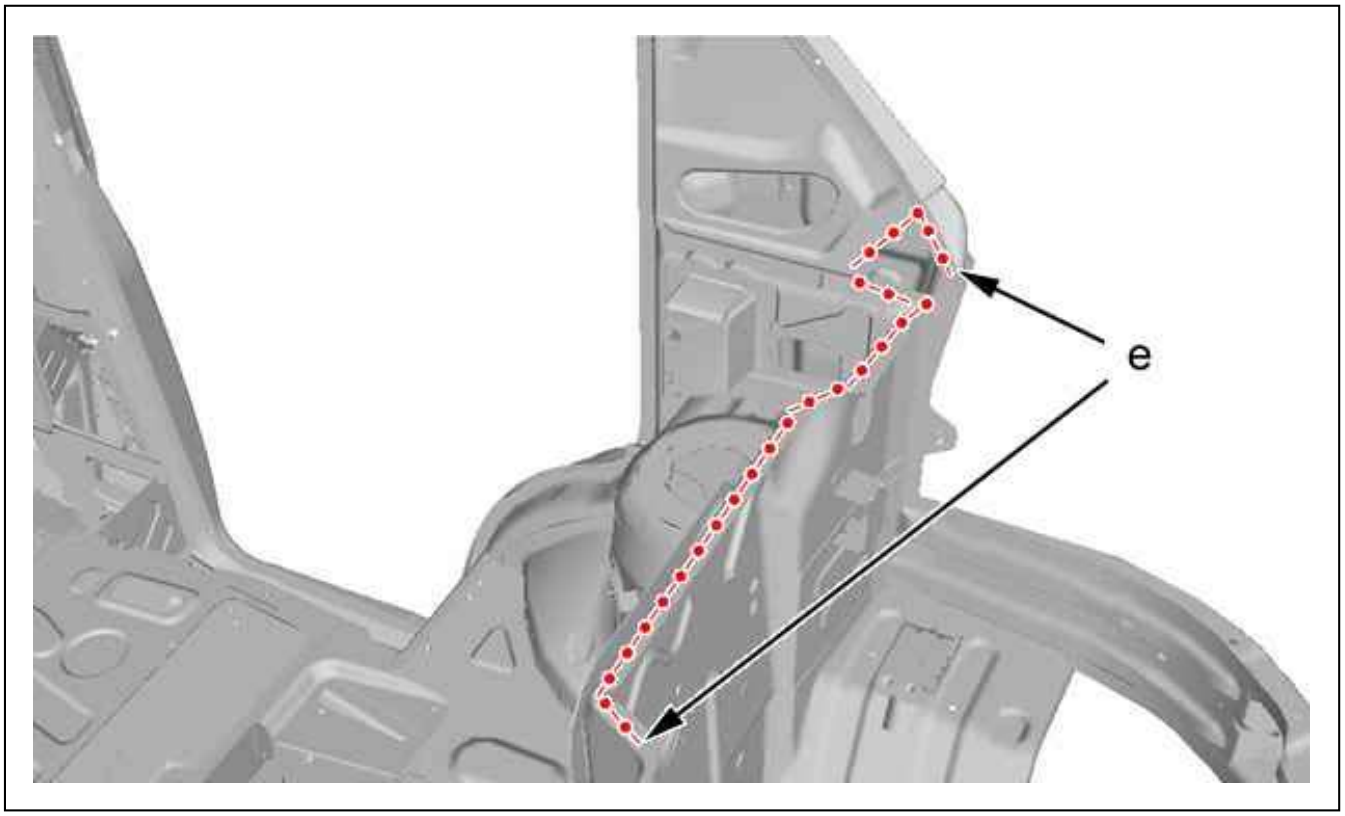

Figure : C4CP20TD

Figure 7.
Prepare the mating edges .
Align the mating edges and protect them with a weldable primer.
Repeat the operation on the opposite side (following "e").

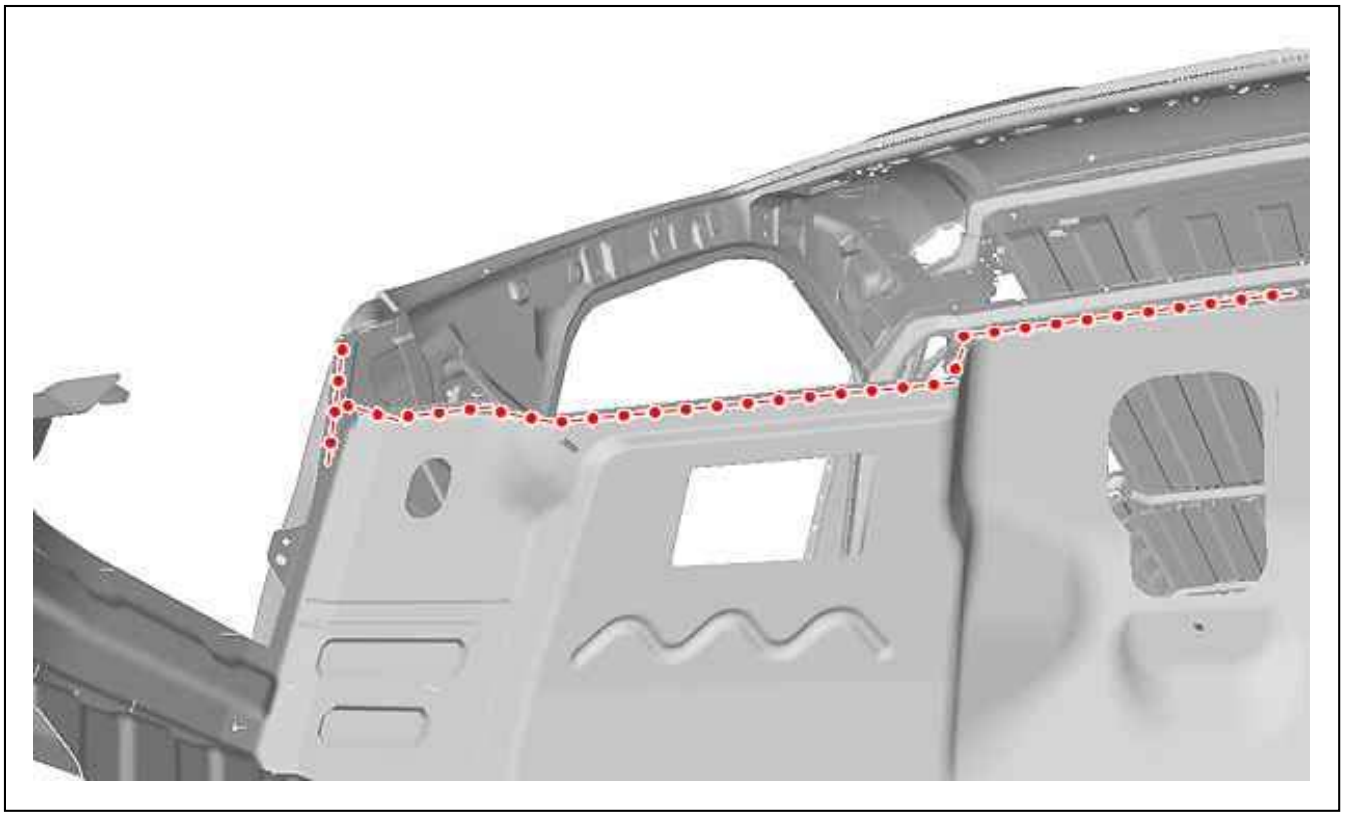

Figure : C4AP1SBD

Figure 8.
Prepare the mating edges .
Align the mating edges and protect them with a weldable primer.

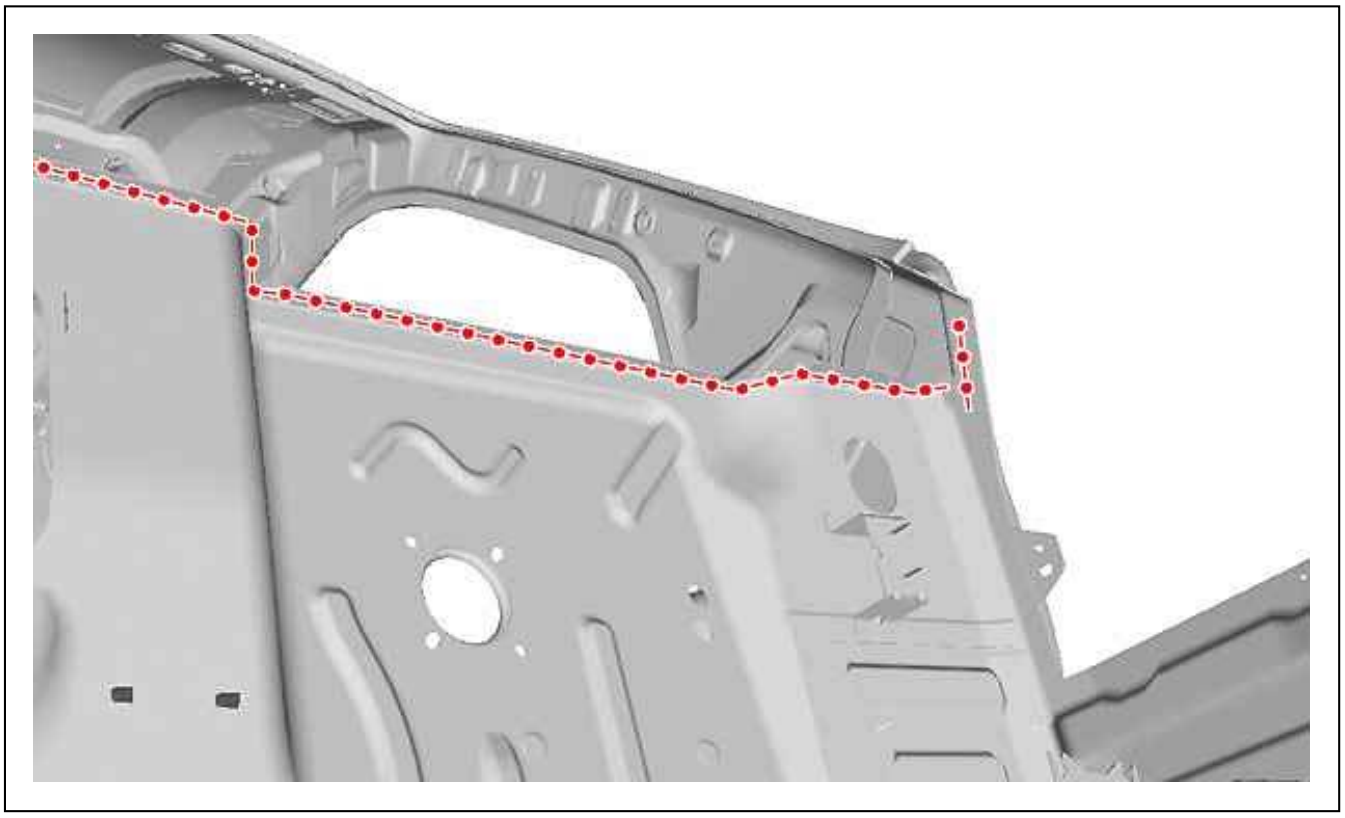

Figure : C4AP1SCD

Figure 9.
Prepare the mating edges .
Align the mating edges and protect them with a weldable primer.

7. Adjustment

Present the component for adjustment.
Check the fits and clearances (see the relevant operation).

8. Welding

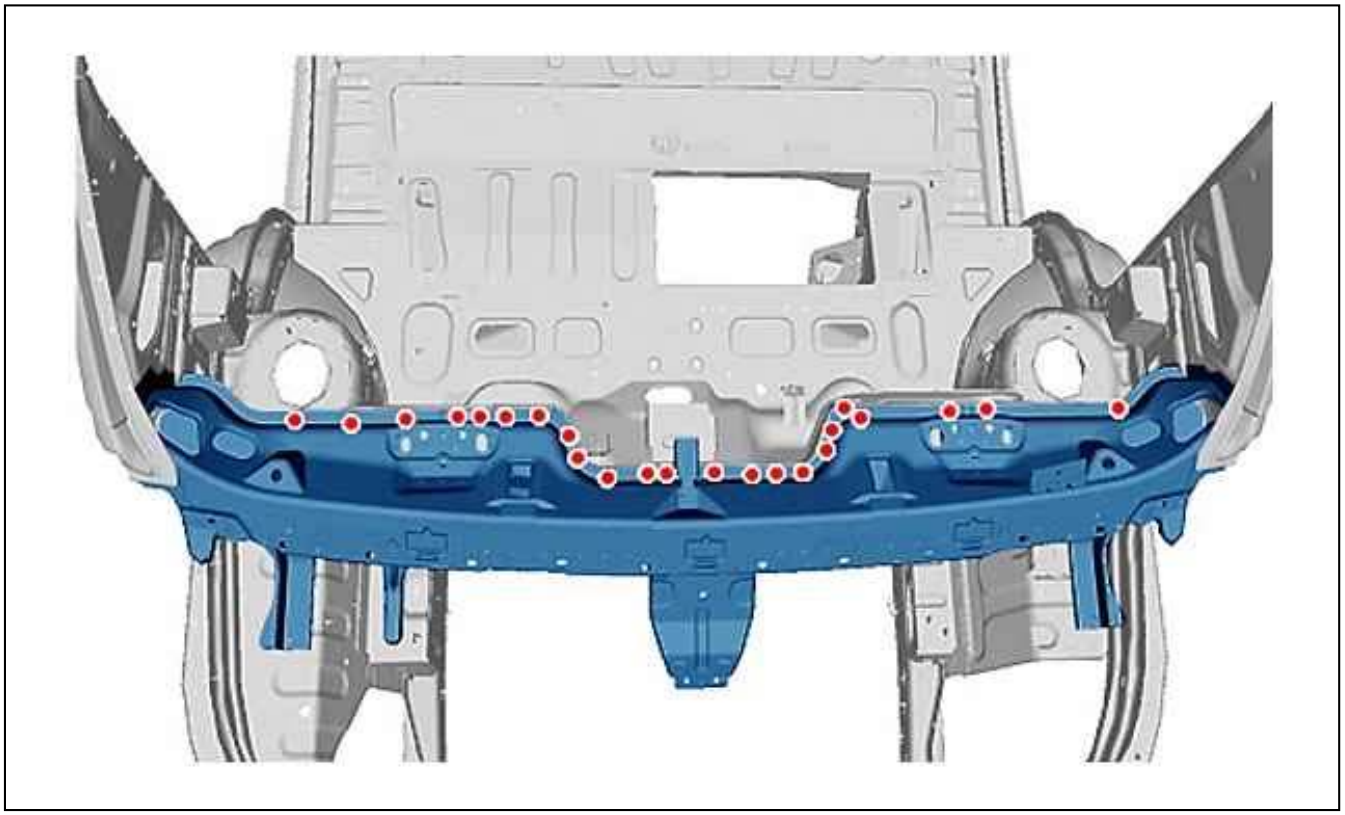

Figure : C4AP1SDD

Figure 10.
Weld with electric spot welds.

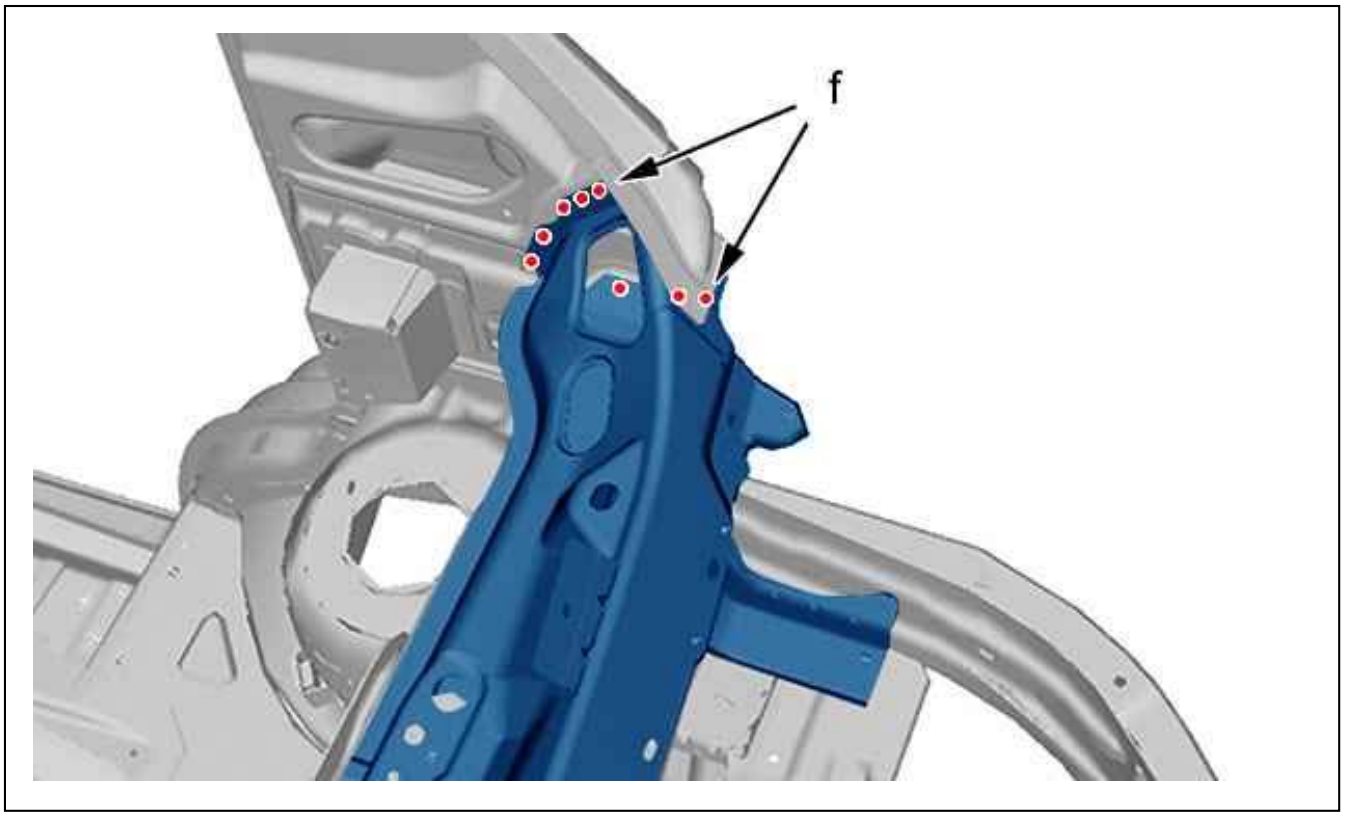

Figure : C4CP20UD

Figure 11.
Weld with MIG or MAG spot welds.
Grind the spot welds.
Repeat the operation on the opposite side (following "f").

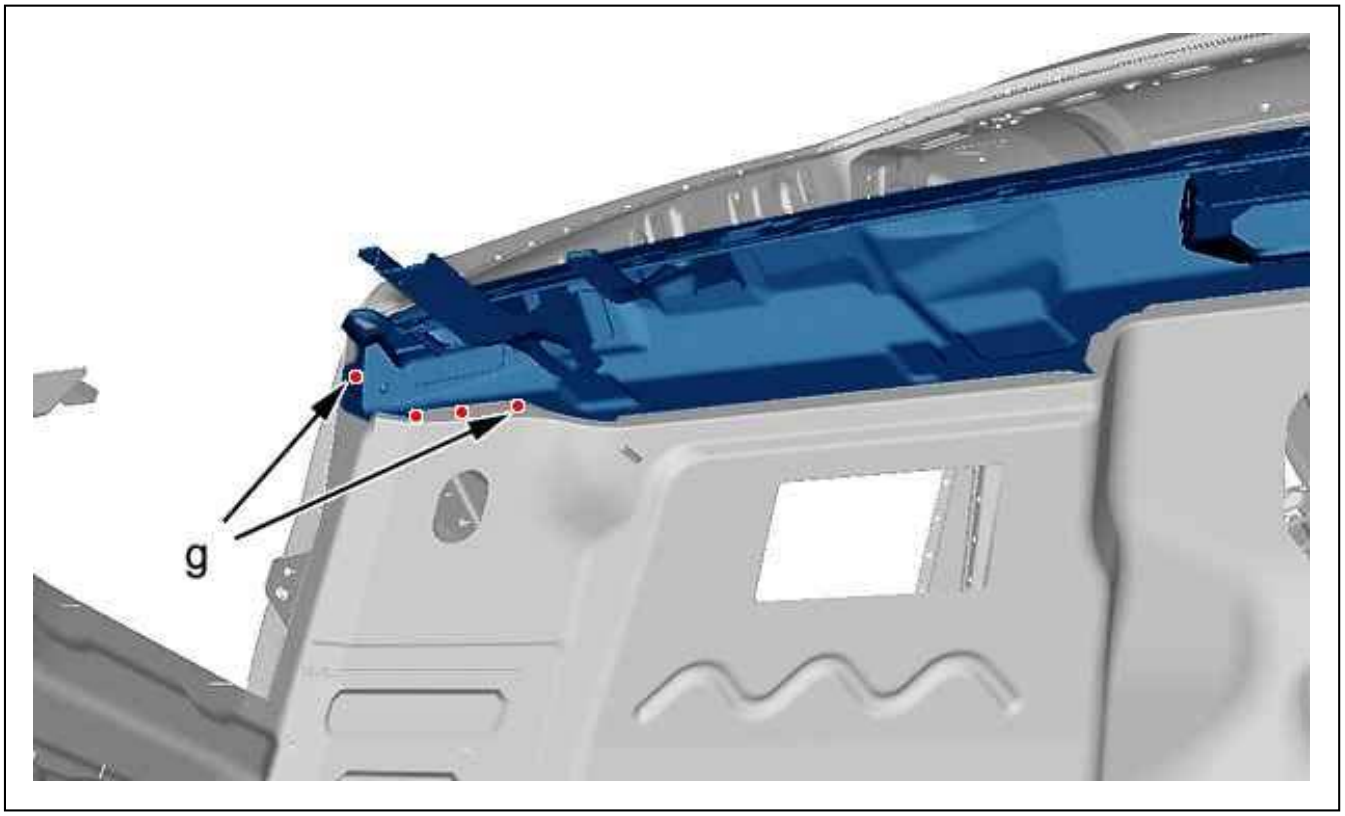

Figure : C4AP1SED

Figure 12.
Weld with MIG or MAG spot welds.
Grind the spot welds.
Repeat the operation on the opposite side (following "g").

9. Sealing

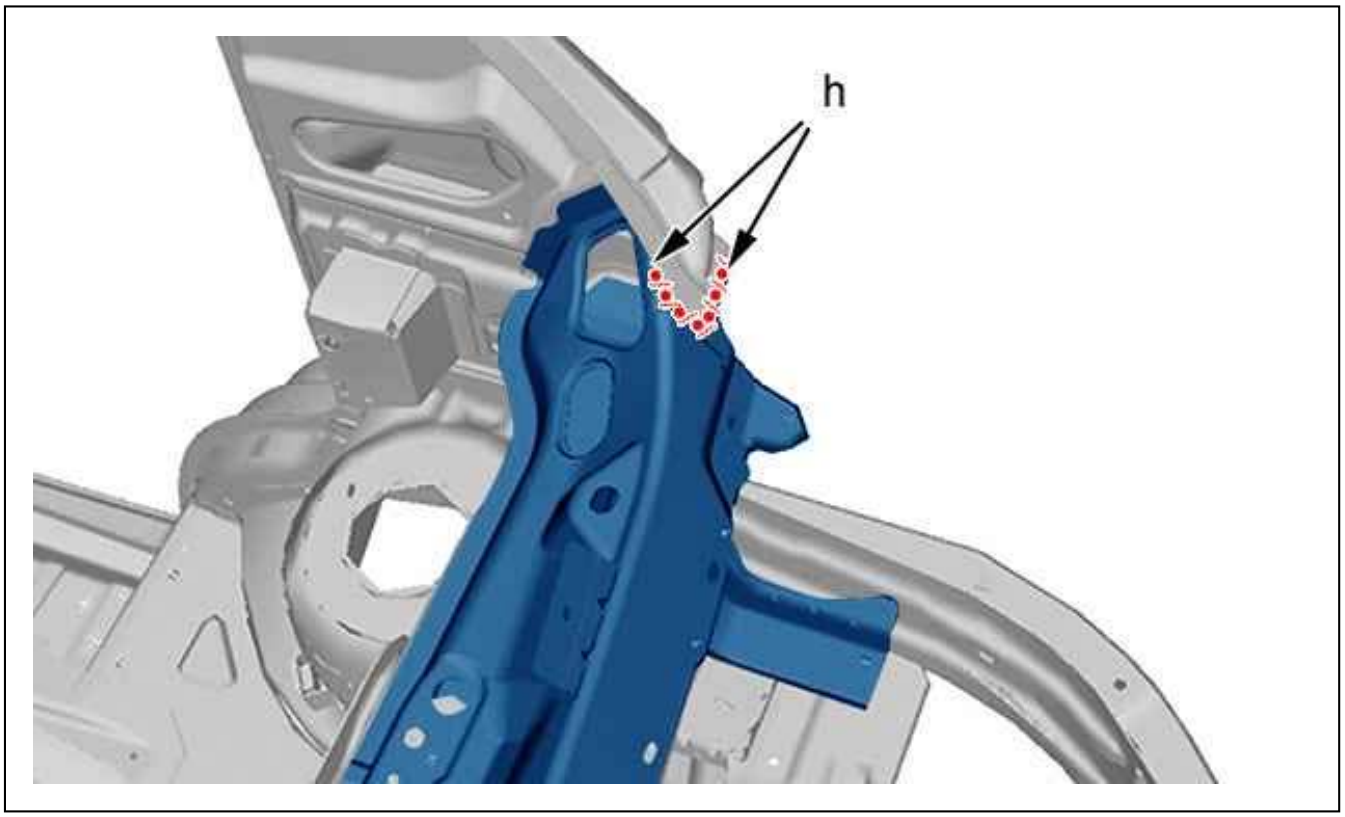

Figure : C4CP20VD

Figure 13.
Apply a phosphate-print layer on the zone laid bare.
Apply a sealing mastic of type " A4" (see the relevant operation).
Repeat the operation on the opposite side (following "h").

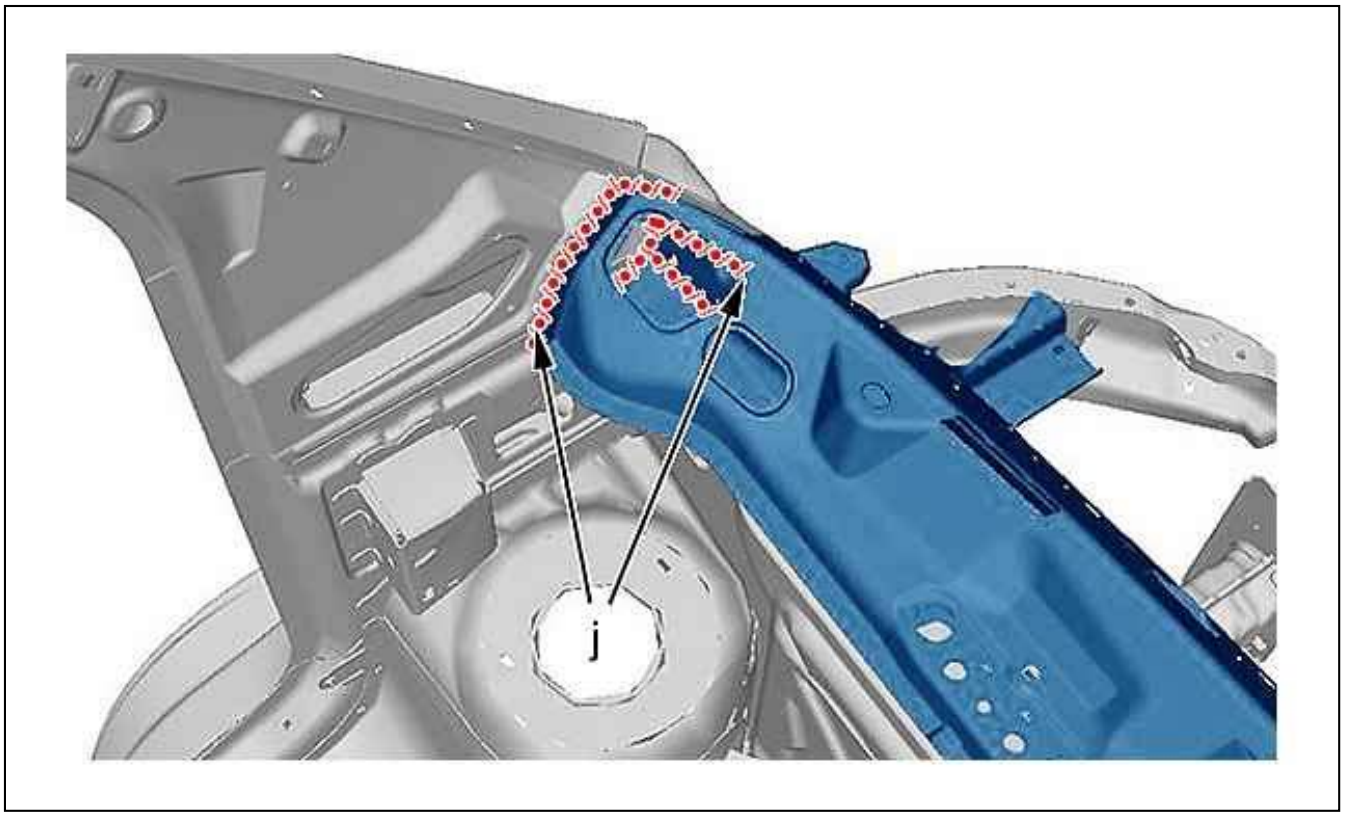

Figure : C4CP20WD

Figure 14.
Apply a phosphate-print layer on the zone laid bare.
Apply a sealing mastic of type " A1" (see the relevant operation).
Repeat the operation on the opposite side (following "j").

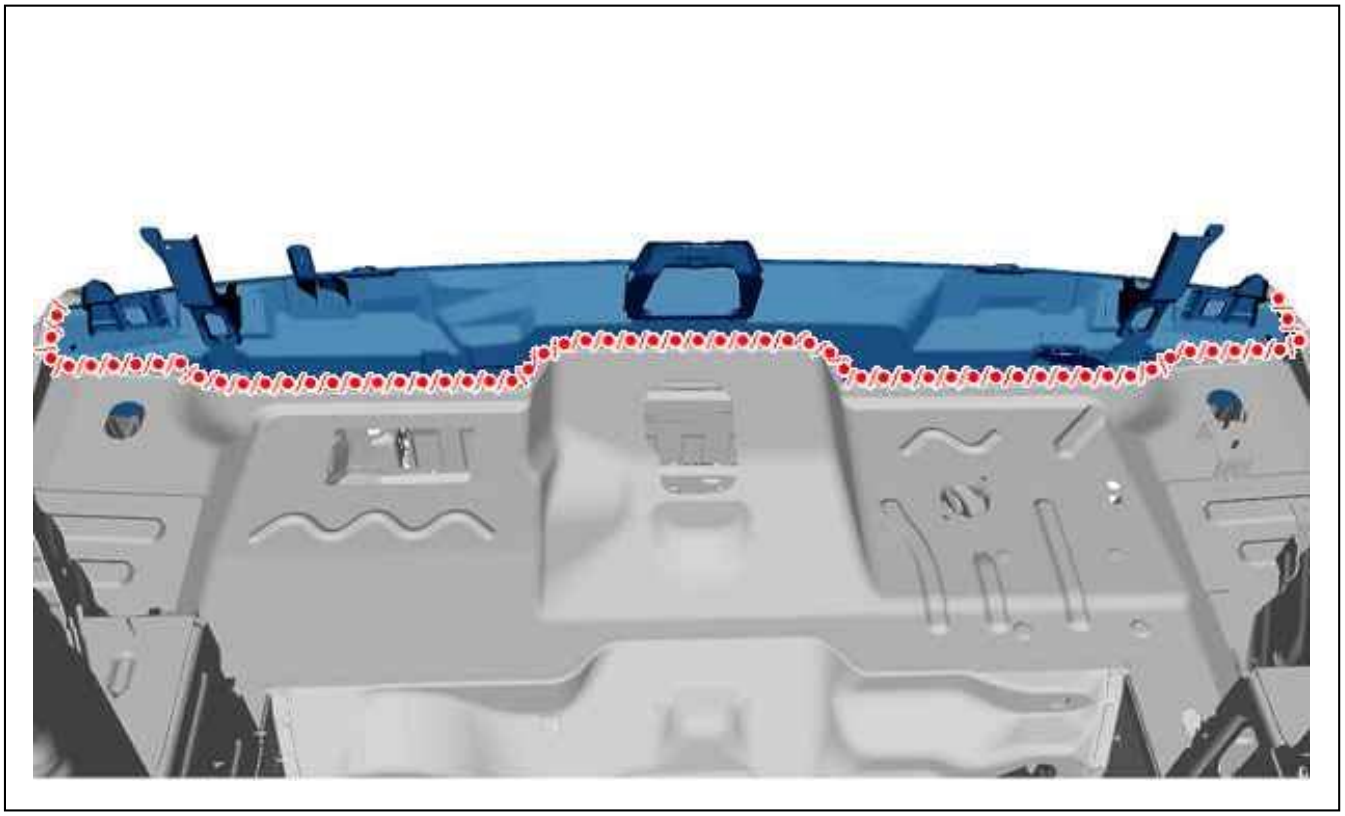

Figure : C4AP1SFD

Figure 15.
Apply a phosphate-print layer on the zone laid bare.
Apply a sealing mastic of type " A1" (see the relevant operation).

10. Protection

Paint then spray into the hollow sections, product index C5, in the repair zone (see the relevant operation).

11. Reinitialisation

Reconnect the battery.

ESSENTIAL : Perform the operations to be carried out following reconnection of the battery.

REPLACEMENT : FRONT LONGERON CORE

ESSENTIAL : All of the stripped surfaces must be protected by means of the approved electrolytic rezincing process . (see the relevant operation).

ESSENTIAL : Observe the elementary rules of hygiene and safety (wear a face mask to protect against fumes and vapour - work in a well ventilated space).

1. Additional operations

Disconnect the battery.
Partial replacement of the cab door frame (see the relevant operation).

2. Identification of the replacement parts

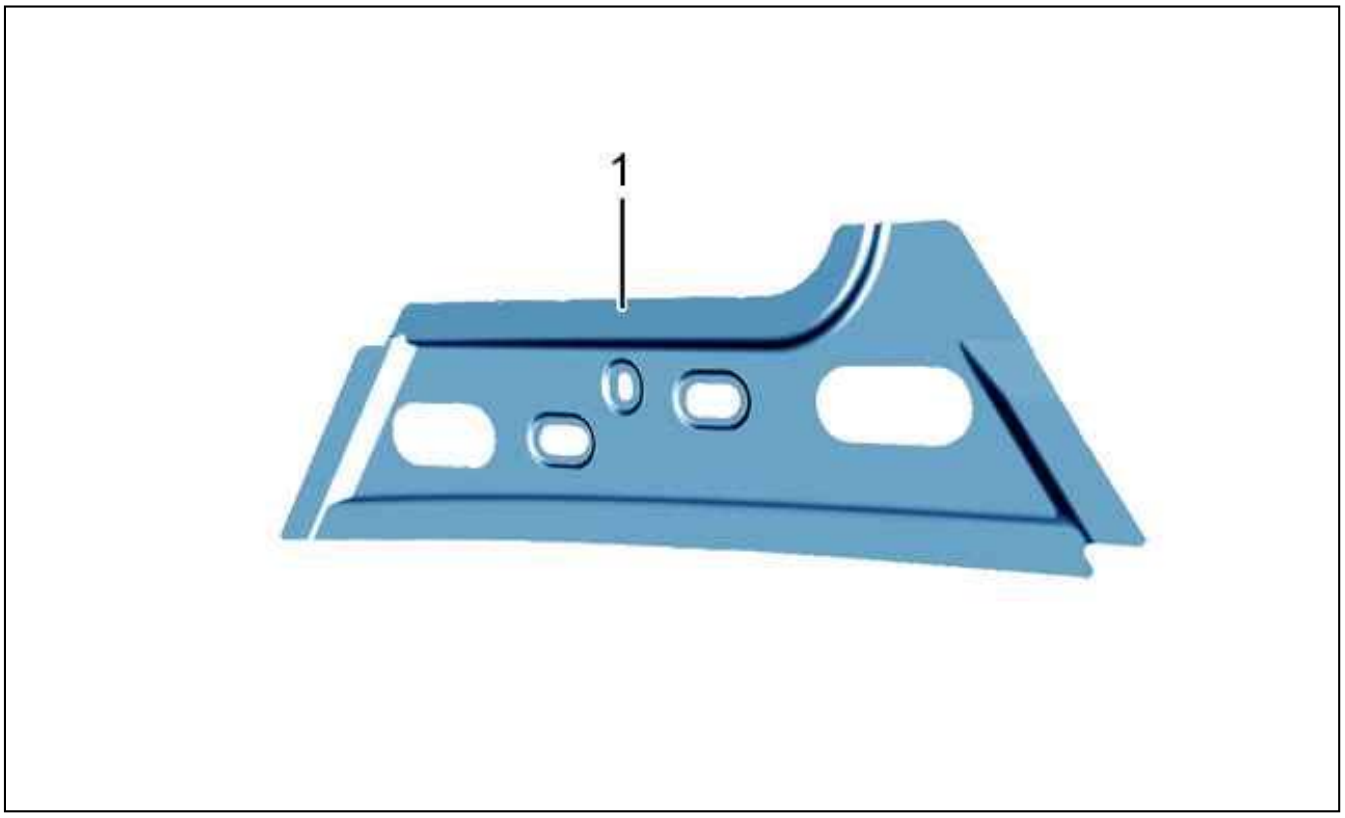

Figure : C4CP1RCD

Figure 1.
Front longeron core.

3. Preparation of the new part

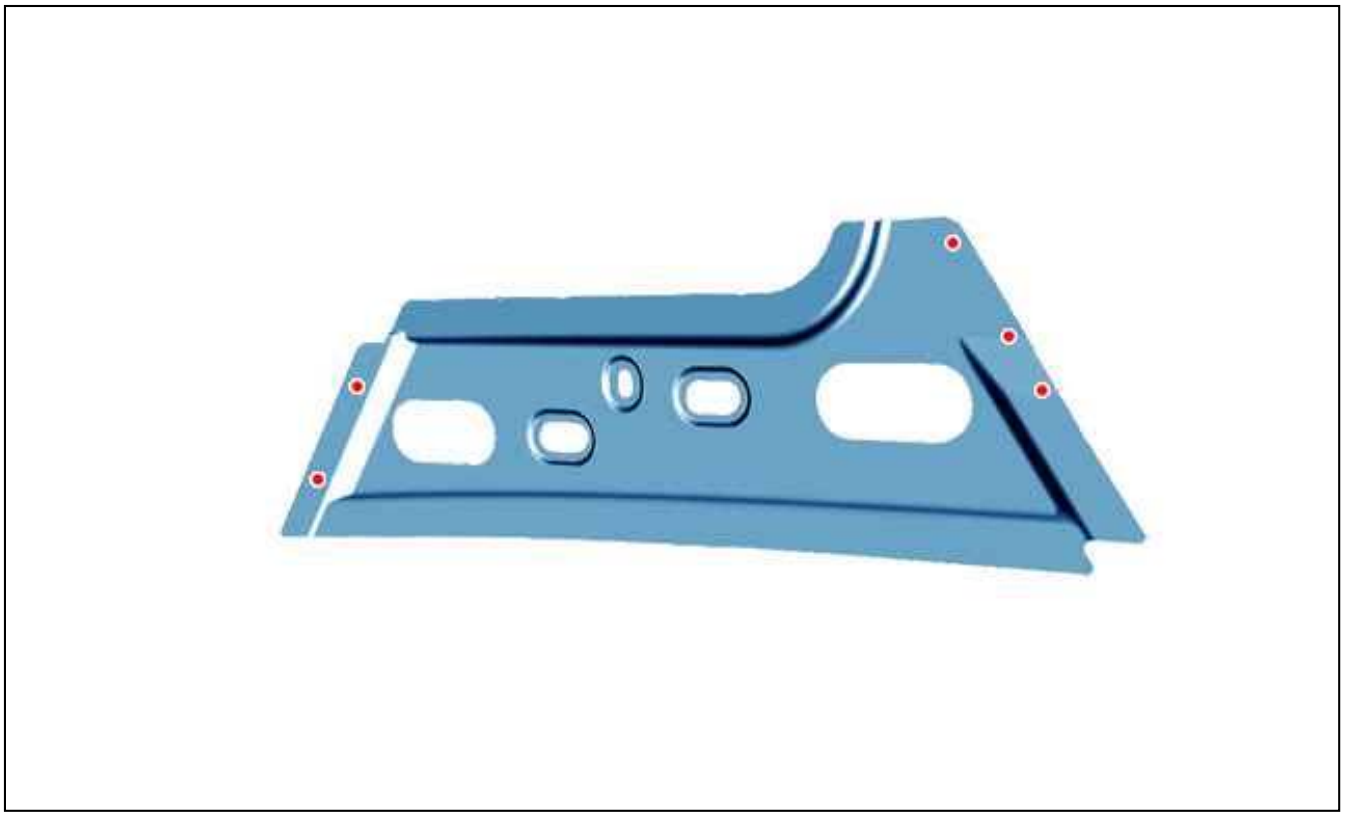

Figure : C4CP1RDD

Figure 2.
Mark then drill to Ø 6 mm for later plug welding (5 holes).
Prepare the mating edges .

4. Cutting out

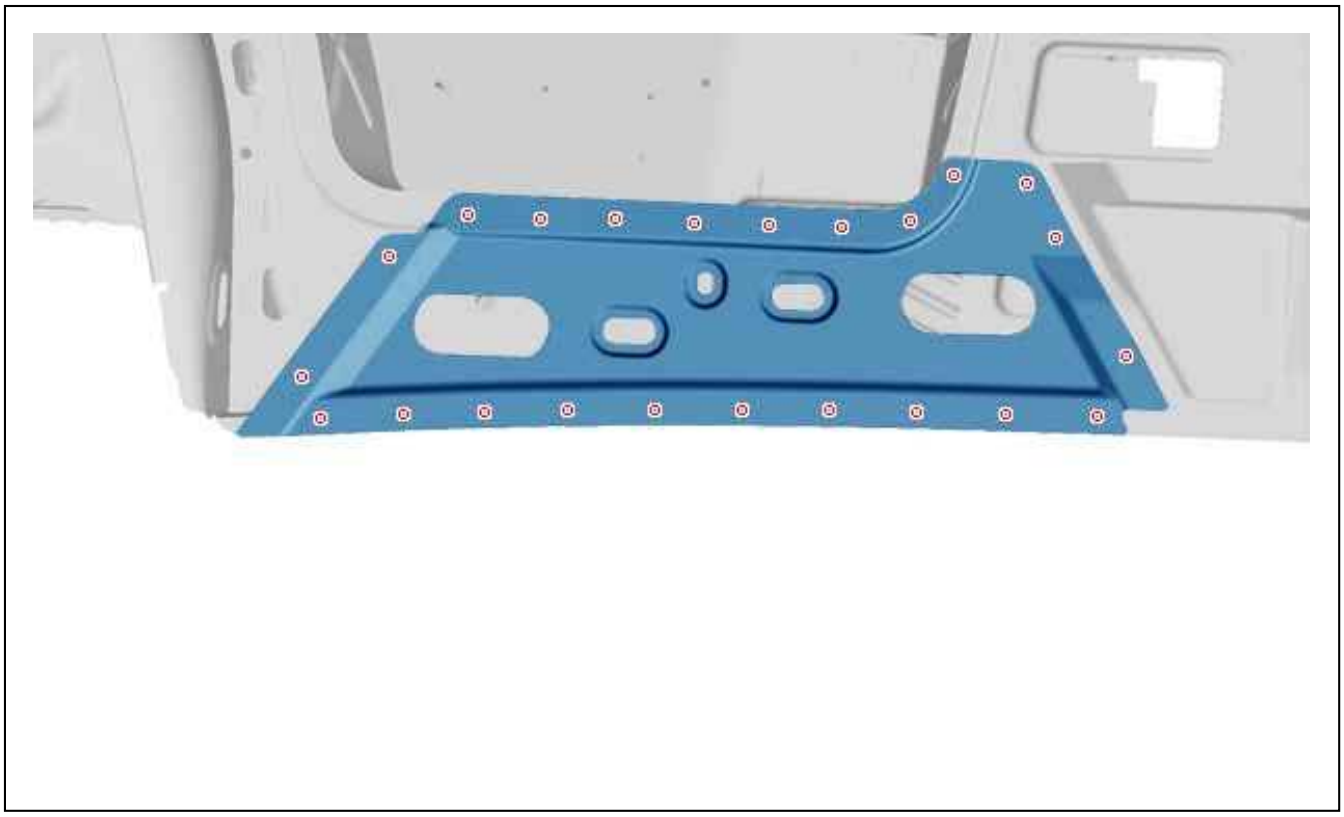

Figure : C4CP1RED

Figure 3.
Cut out the spot welds .
Remove the longeron closing plate Before .

5. Bodywork cleaning and preparation

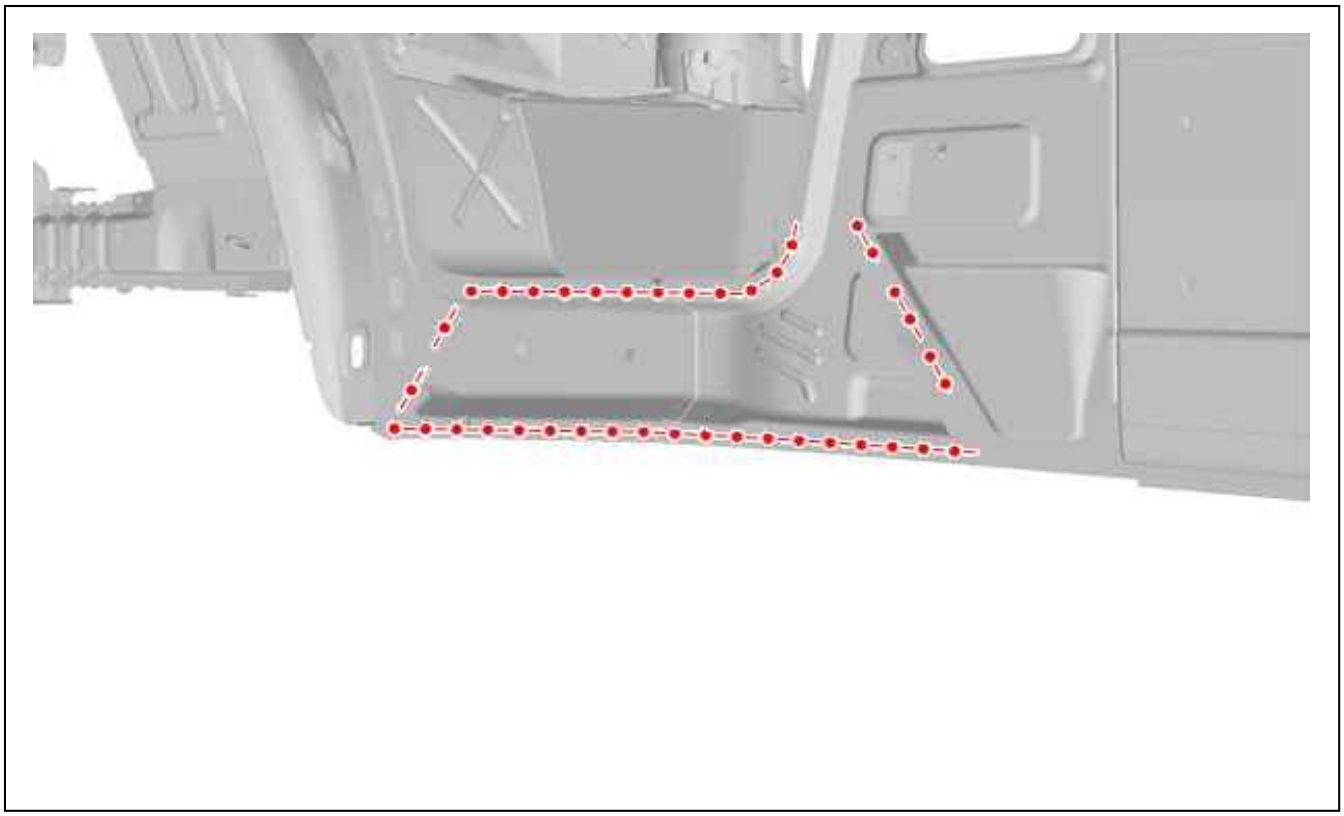

Figure : C4CP1RFD

Figure 4.
Prepare the mating edges .
Align the mating edges and protect them with a weldable primer.

6. Adjustment

Present the component for adjustment.
Check the fits and clearances (see the relevant operation).

7. Welding

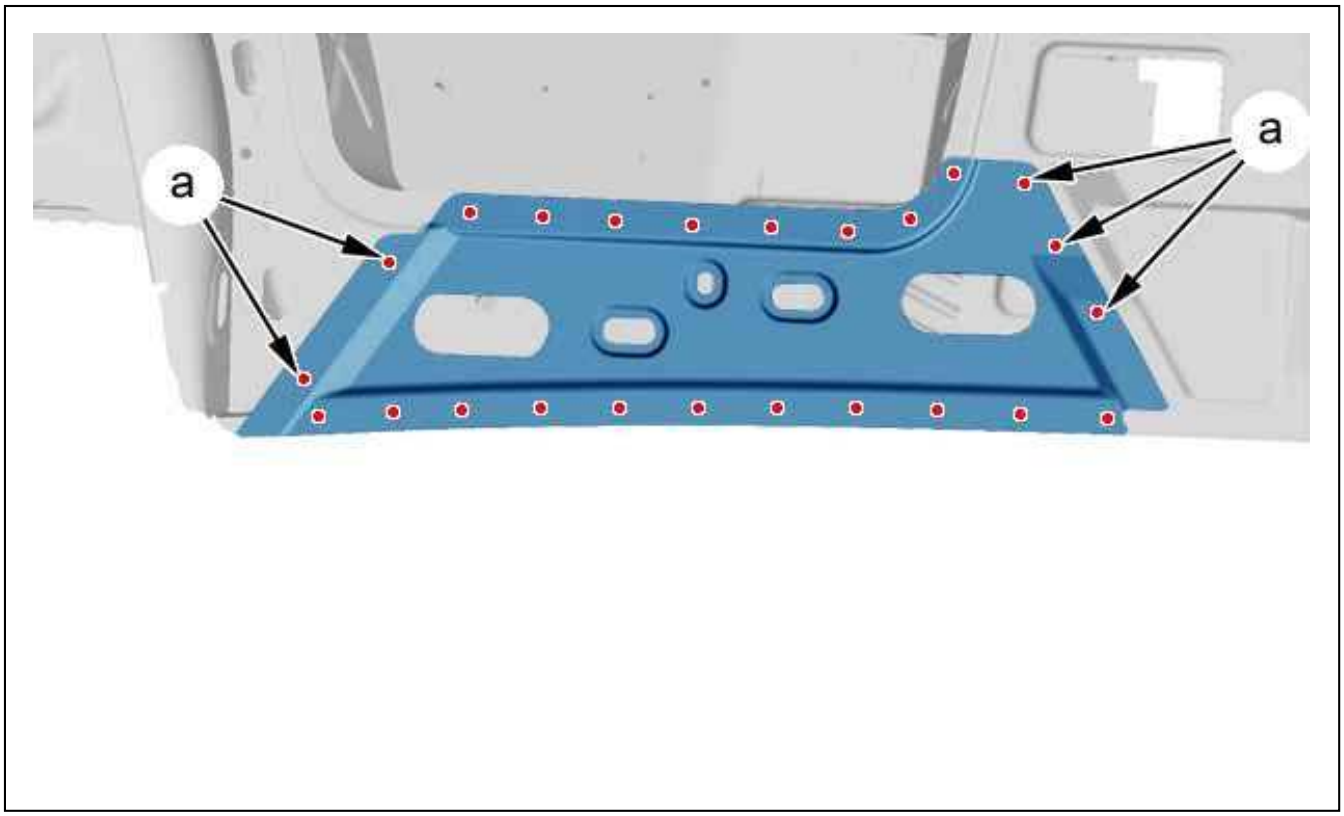

Figure : C4CP1RGD

Figure 5.
Weld with MIG or MAG spot welds.
Grind the plug welds.
Weld with electric spot welds.

8. Protection

Paint then spray into the hollow sections, product index C5, in the repair zone (see the relevant operation).

9. Reinitialisation

Reconnect the battery.

ESSENTIAL : Perform the operations to be carried out following reconnection of the battery.

REMOVING - REFITTING : WINDSCREEN

ESSENTIAL : Observe the safety and cleanliness recommendations .

1. Tooling

Presentation :

- Glazing tools
- Glazing consumables

2. Removing

Remove :

- The wiper blades
- The scuttle grille
- The windscreen pillar trim
- The interior mirror
- The rain sensor

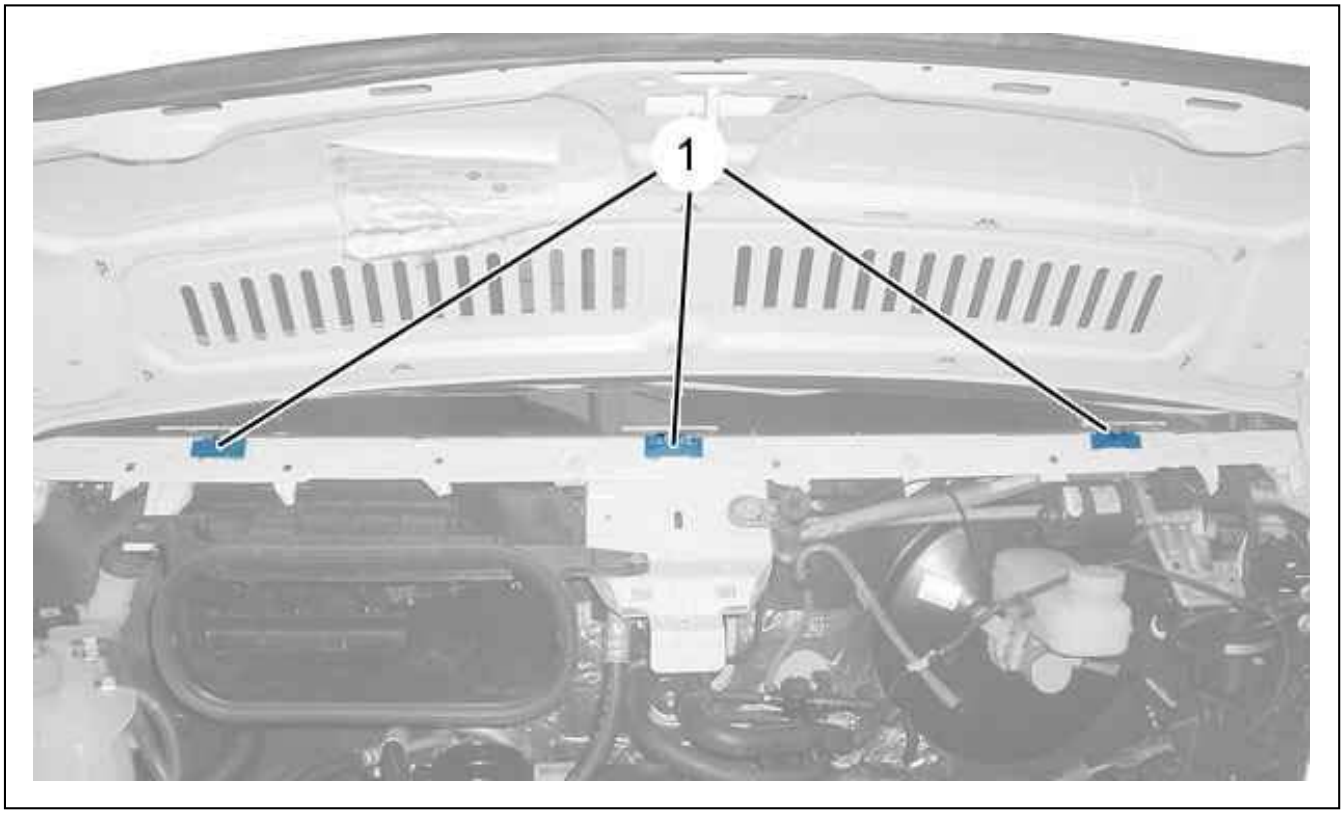

Figure : B1BPRU3D

Remove the shims (1).

N.B. : Plan for replacement of the shims.

Protect the vehicle’s sun visor module and fascia.

ESSENTIAL : Gloves and protective goggles must be worn for the following operations.

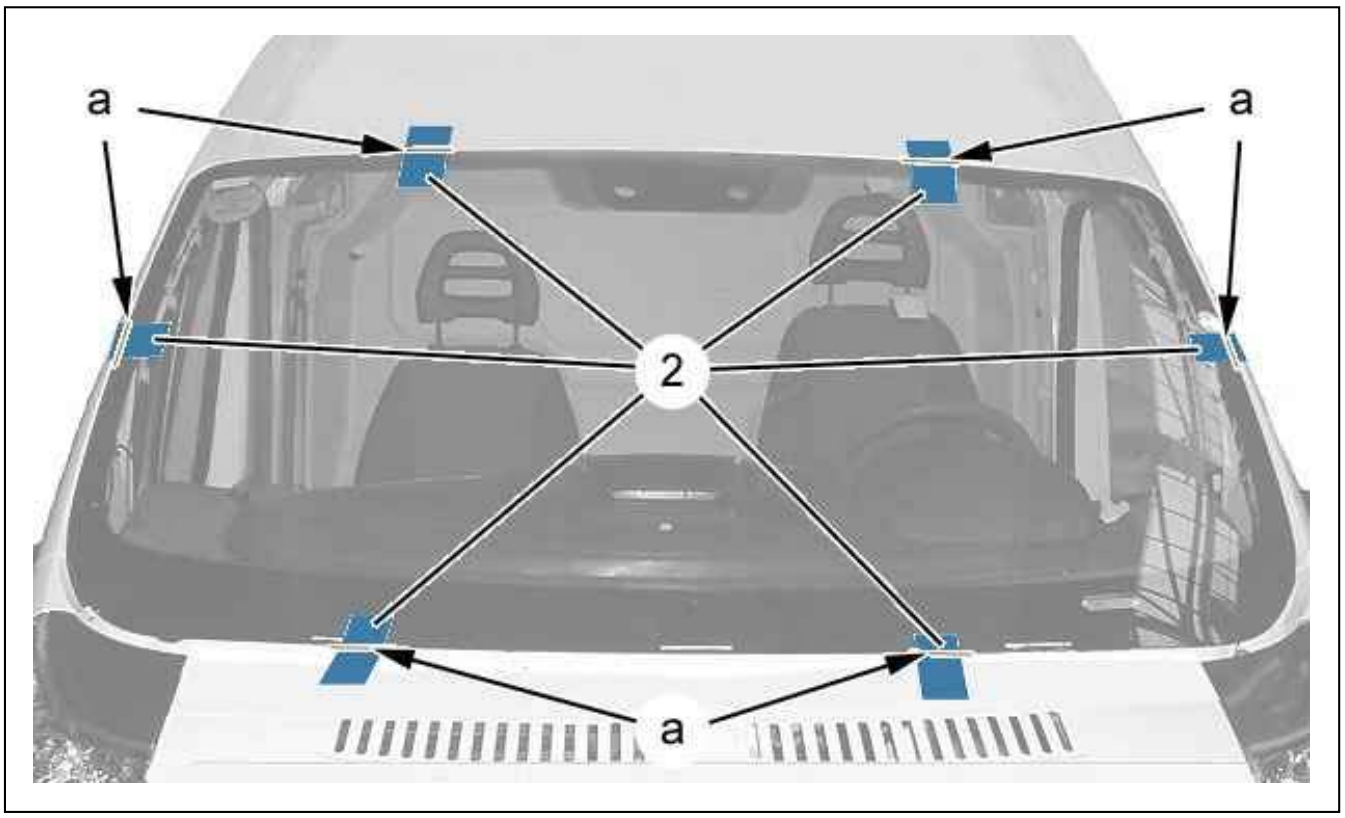

Figure : C5CP09RD

N.B. : If the windscreen is to be reused, align it and position pieces of adhesive tape 2 as shown above. Cut the tape (at "a").



Figure : C5CG1DQD

Thread the square section cutting wire [1354-E] in the awl [1354-C].
Pass the square section cutting wire [1354-E] under the windscreen seal following " b" around the entire periphery ; Using soapy water.
Open the bonnet.

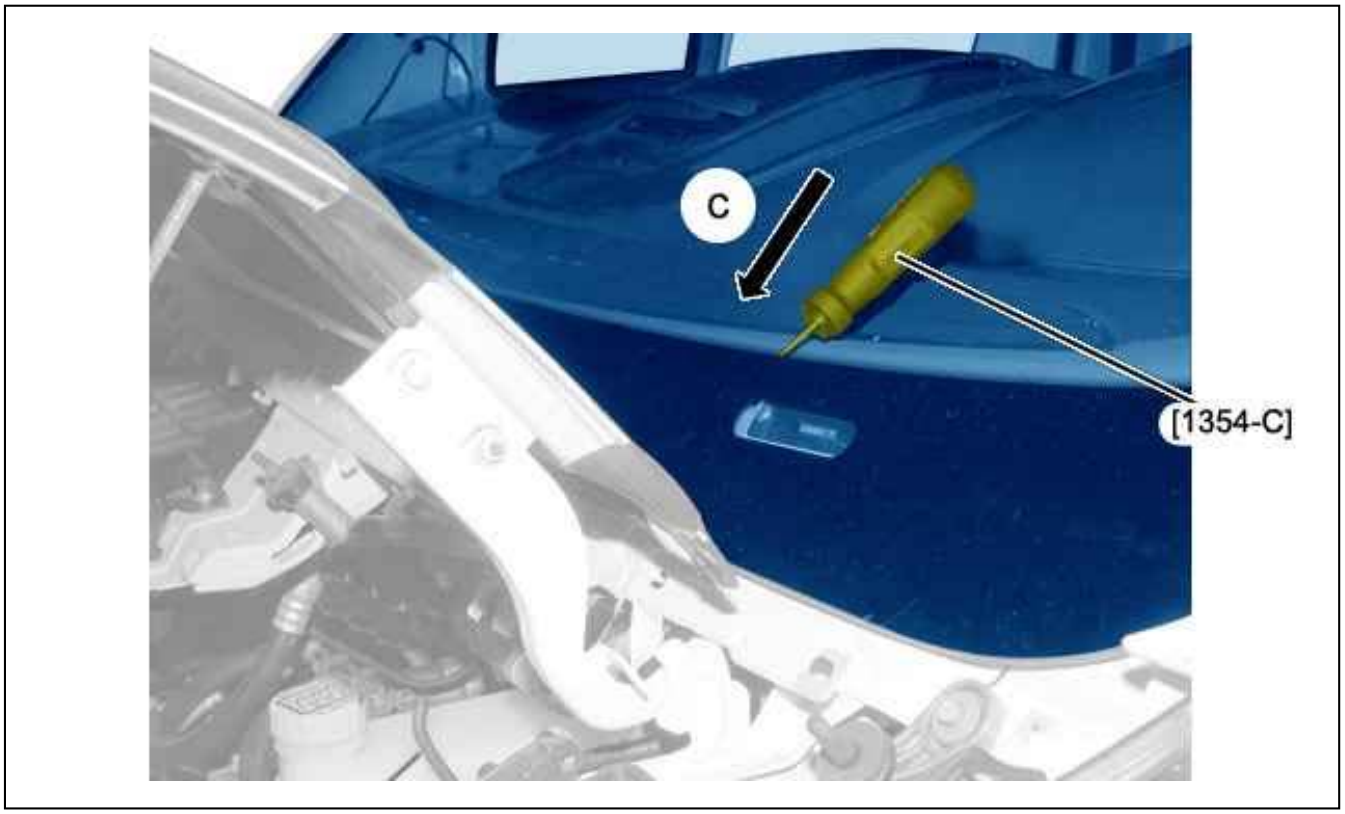

Figure : C5CG1DRD

Pass the awl [1354-C] through the bead of adhesive (At "c").

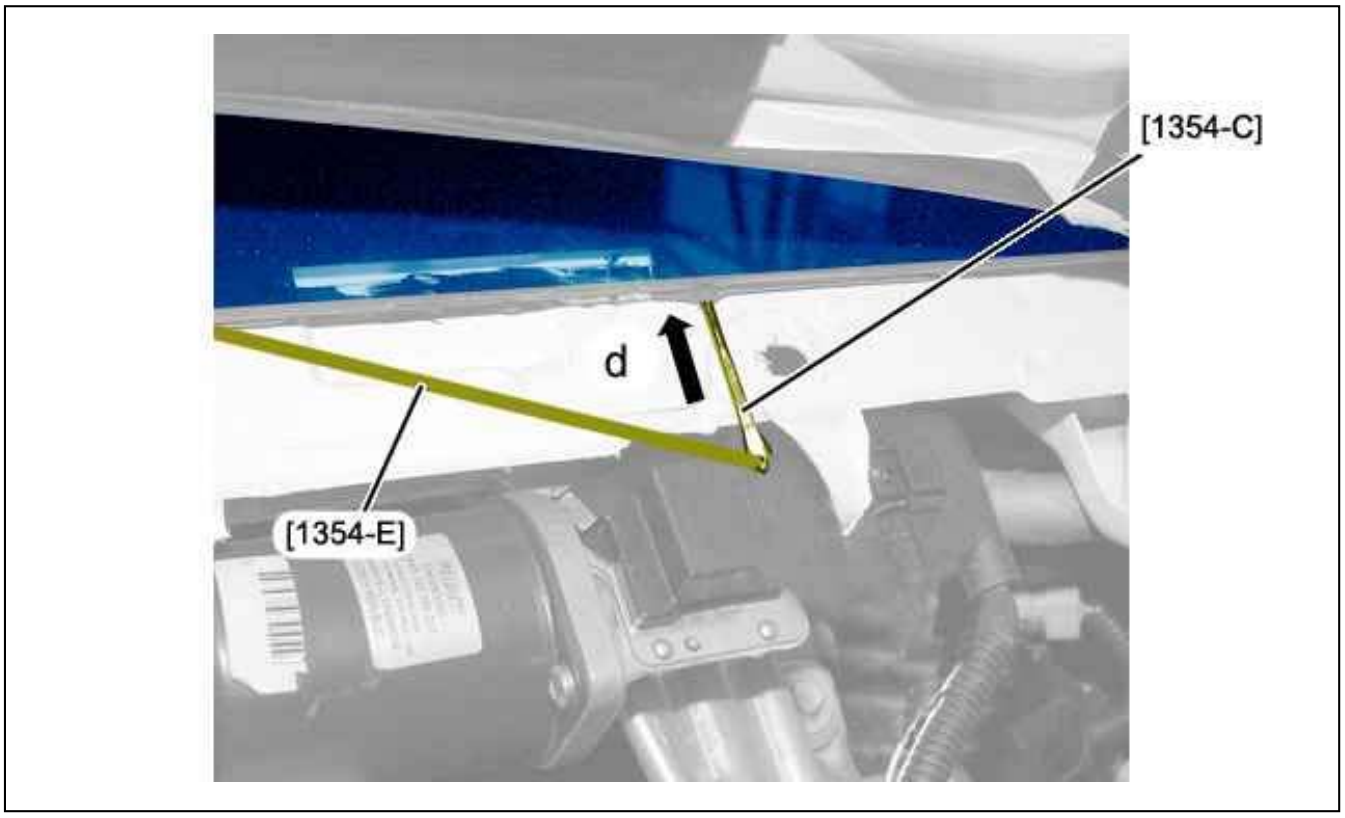

Figure : C5CG1DUD

Thread the square section cutting wire [1354-E] in the awl [1354-C] and pass it (At "d").
Cut the end of the square section cutting wire [1354-E] leaving a sufficient length to permit fixing in the winding device [1354-AZ].
Fix the end of the square section cutting wire [1354-E] in the winding device [1354-AZ].

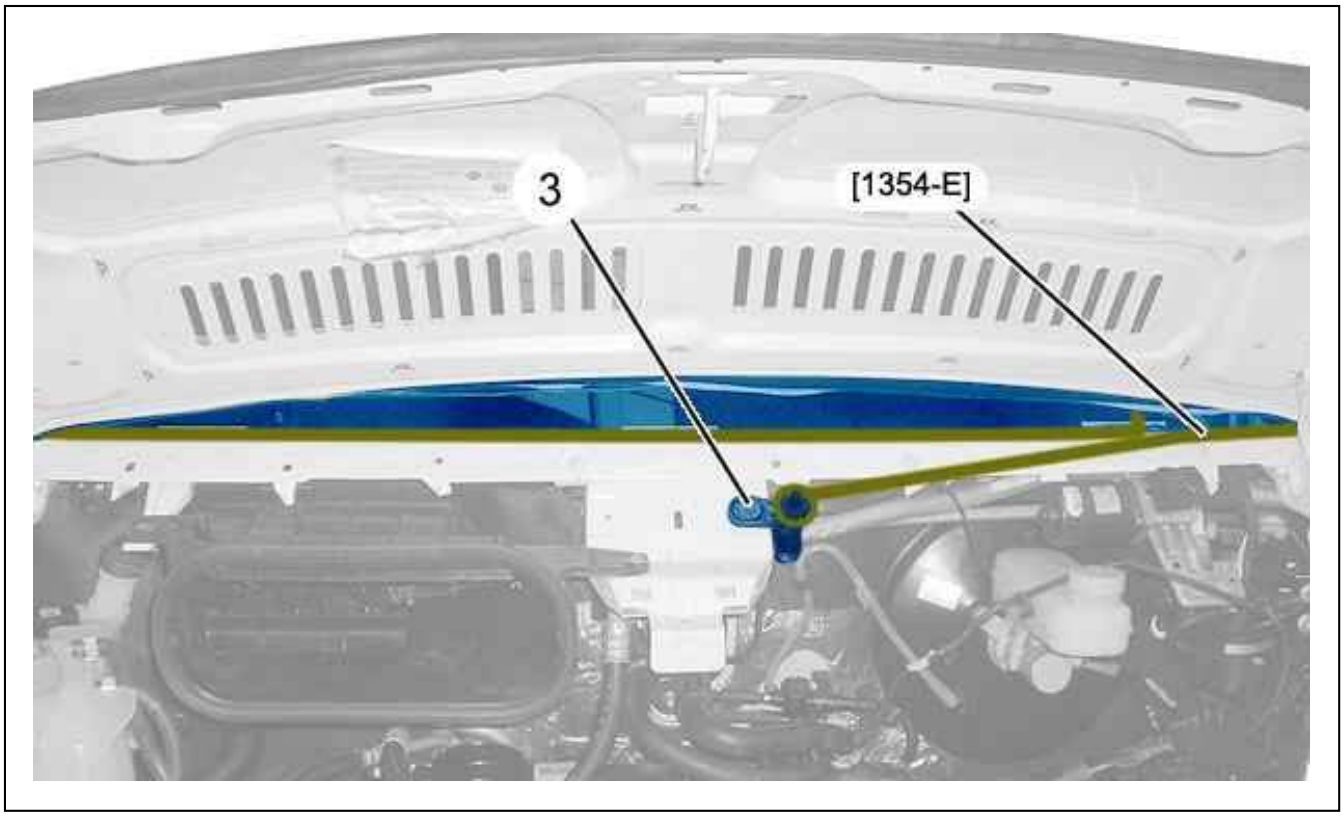

Figure : C5CG1DWD

Cut the square section cutting wire [1354-E] leaving a sufficient length to permit fixing on the windscreen wiper motor fixing (3).
Fix the square section cutting wire [1354-E] on the windscreen wiper motor fixing (3).
Close the bonnet.

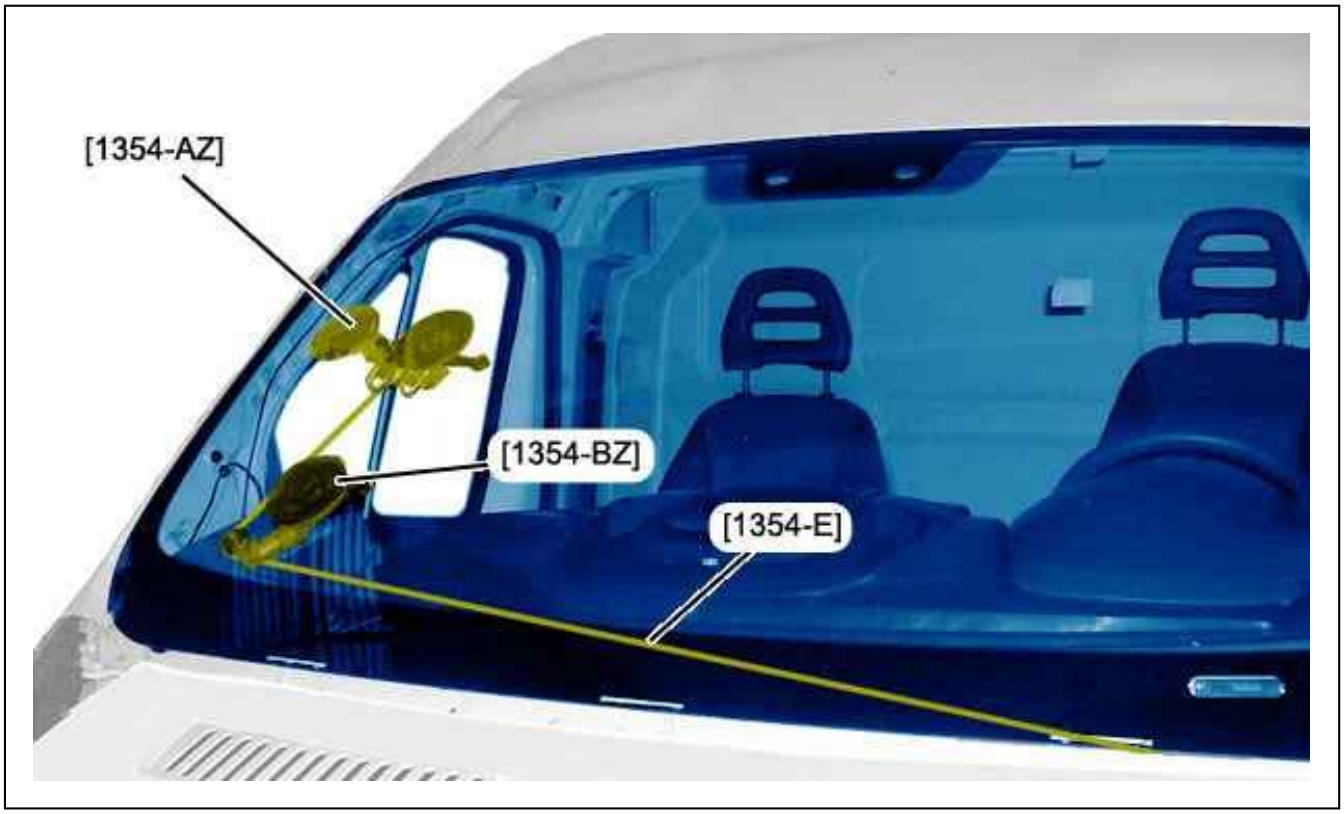

Figure : C5CG1DZD

Put the winding device [1354-AZ] in place as indicated on the diagram .
When pulling the square section cutting wire taut, check that the wire is placed correctly under the lip of the windscreen seal.
Cut the first part as far as the lower right corner.

N.B. : At the slightest resistance of the wire on cutting, slacken it and help it to pass the obstacle (support shims excessively thick bead of adhesive or panel junction).

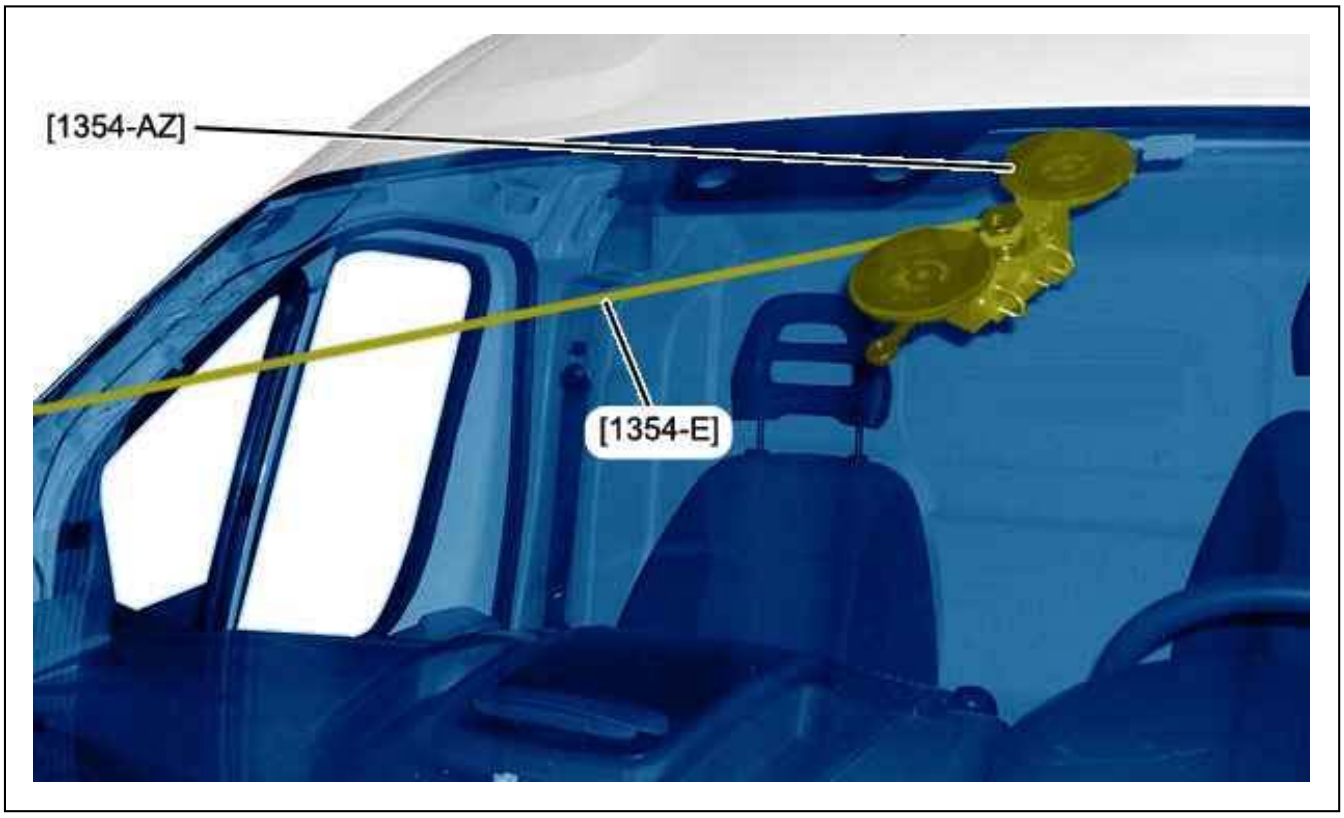

Figure : C5CG1E2D

Move the winding device [1354-AZ] as indicated on the diagram and continue cutting.

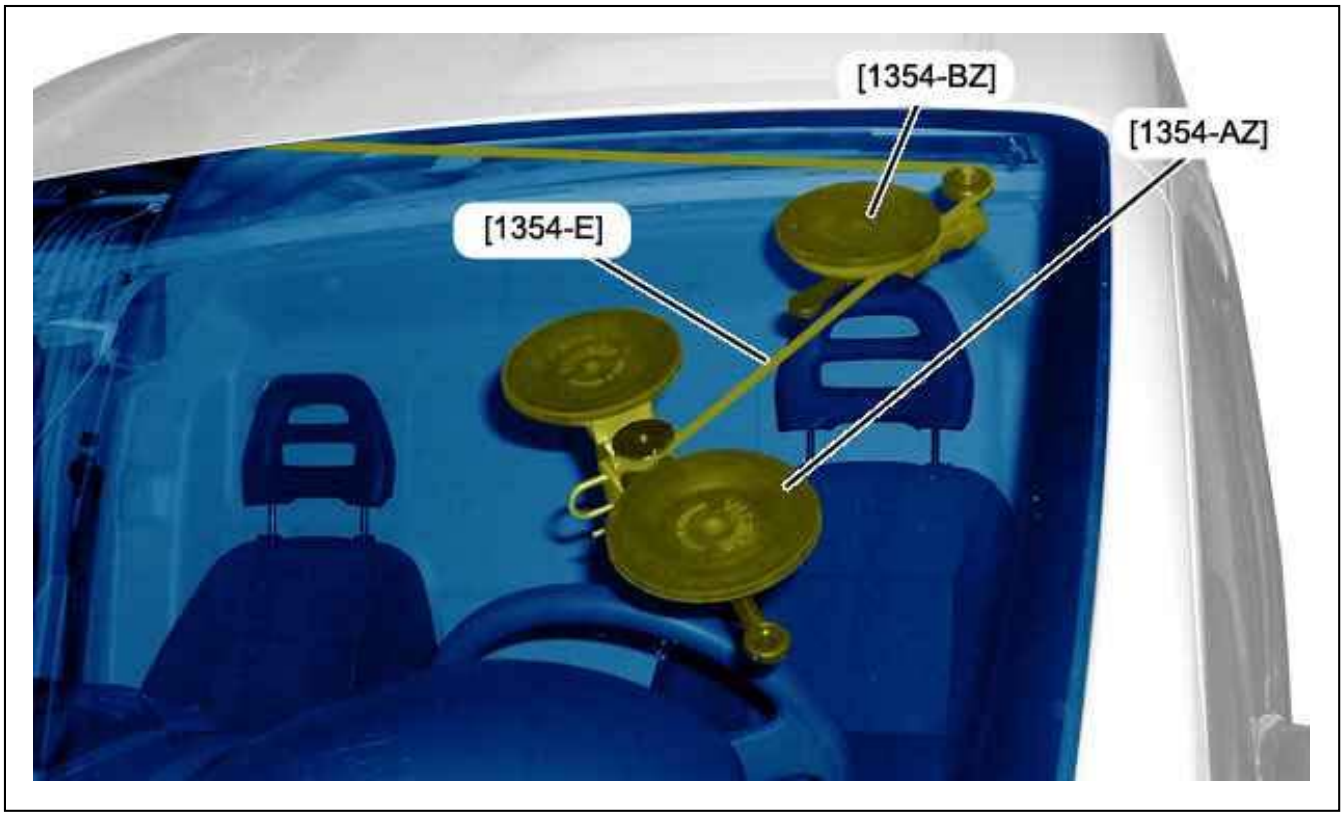

Figure : C5CG1E5D

Move the winding device [1354-AZ] as indicated on the diagram and continue cutting.

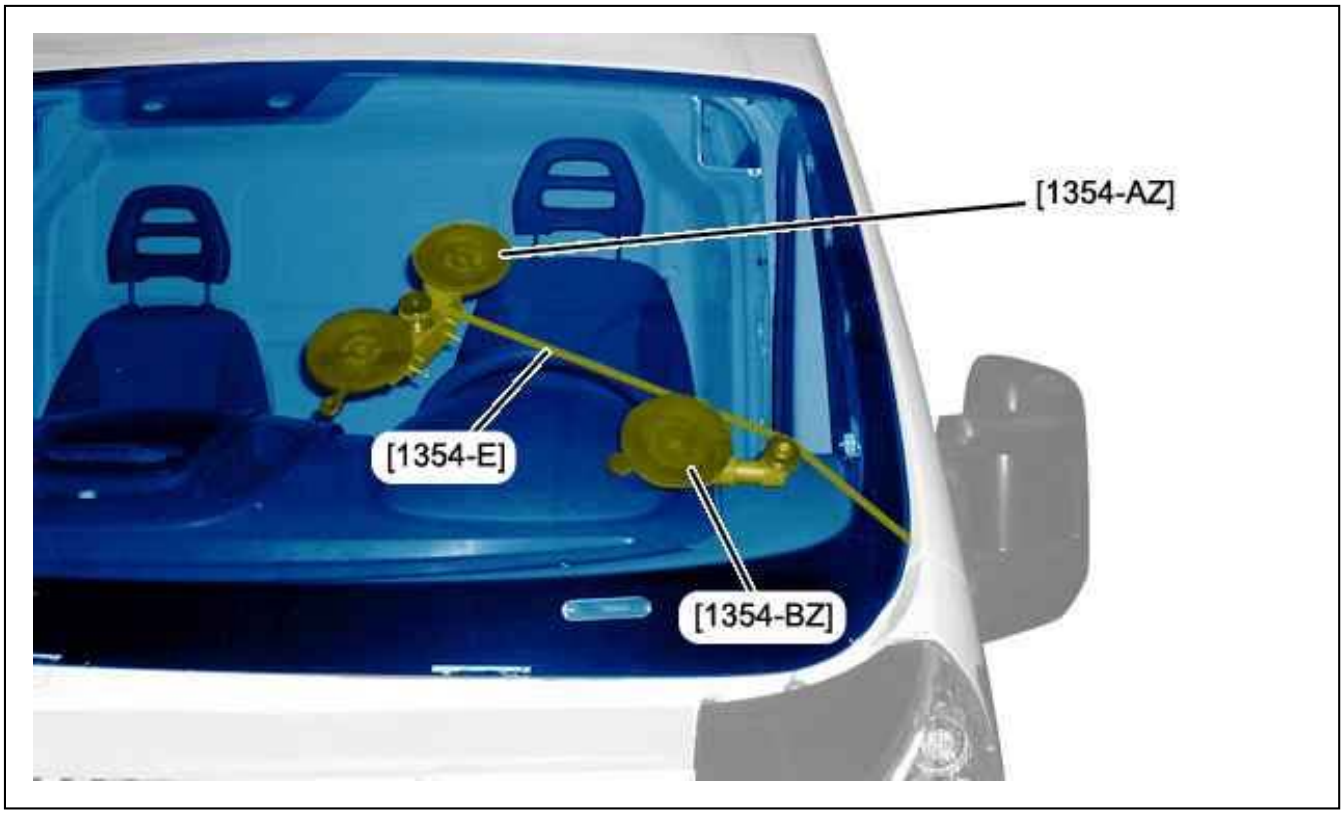

Figure : C5CG1E8D

Move the winding device [1354-AZ] as indicated on the diagram and finish the cut.



Figure : C5CG1E9D

N.B. : For the following operations, two operators are necessary.

Remove the windscreen (4) ; Using the tools [KIT1-VENT].

3. Refitting

ESSENTIAL : Fit a new rain sensor .

Refit the shims (1) (New).

3.1. Preparing the flange and windscreen

Fit the electric knife [FEIN-400E] with the blade N° 146.
Level off the beads of adhesive on the windscreen and the flange.

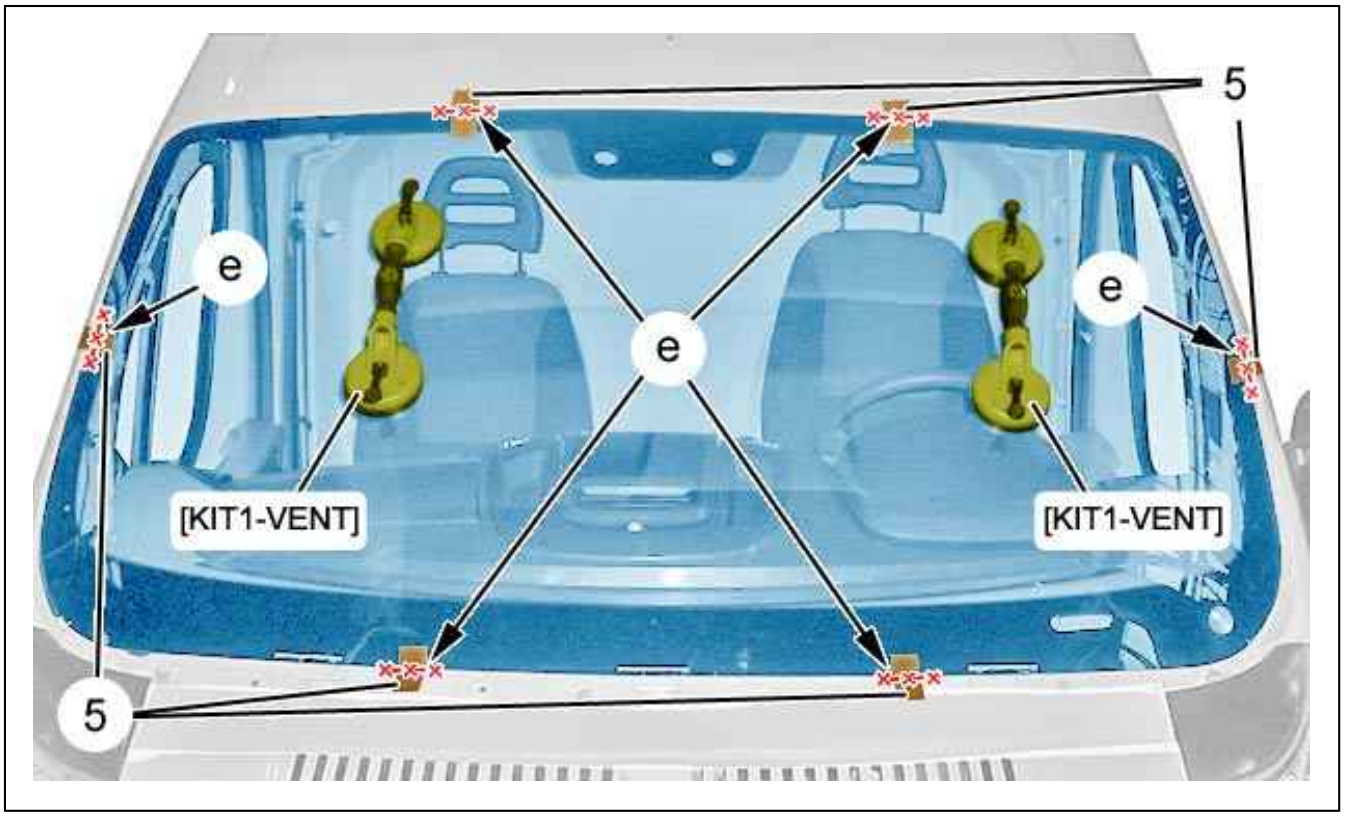

Figure : C5CP0A0D

If the windscreen is to be replaced, centre it and position adhesive tape (5), as shown above. Cut the tape (at "e").
Remove the windscreen .
Touch up with anti-corrosion product.
Degrease the flange and the windscreen with the product selected from the adhesive kit.
Allow to dry for 10 mn.

3.2. Applying the adhesive

Fit the extruder gun with the mastic mixer assembly.
Take the nozzle supplied in the glueing kit.
Cut out the end of the nozzle to a diameter of 8 mm and a height of 13 mm.
1st case : windscreen (Recovered).
There is no need to apply primer.
The bearing face for affixing seal must be perfectly clean.
Remove any impurities on the shaved seal ; Using a blow gun .
2nd case : windscreen (New).
Degrease the glass surround using the product selected from the bonding kit.
Further primer must be applied following the line of the primer applied during manufacture (Allow to dry for 10 mn).

CAUTION : No more than 8 minutes must elapse between applying the mastic and positioning the glass (For the quick setting bonding mastics).

Apply the bead of adhesive to the centre of the trace of primer.

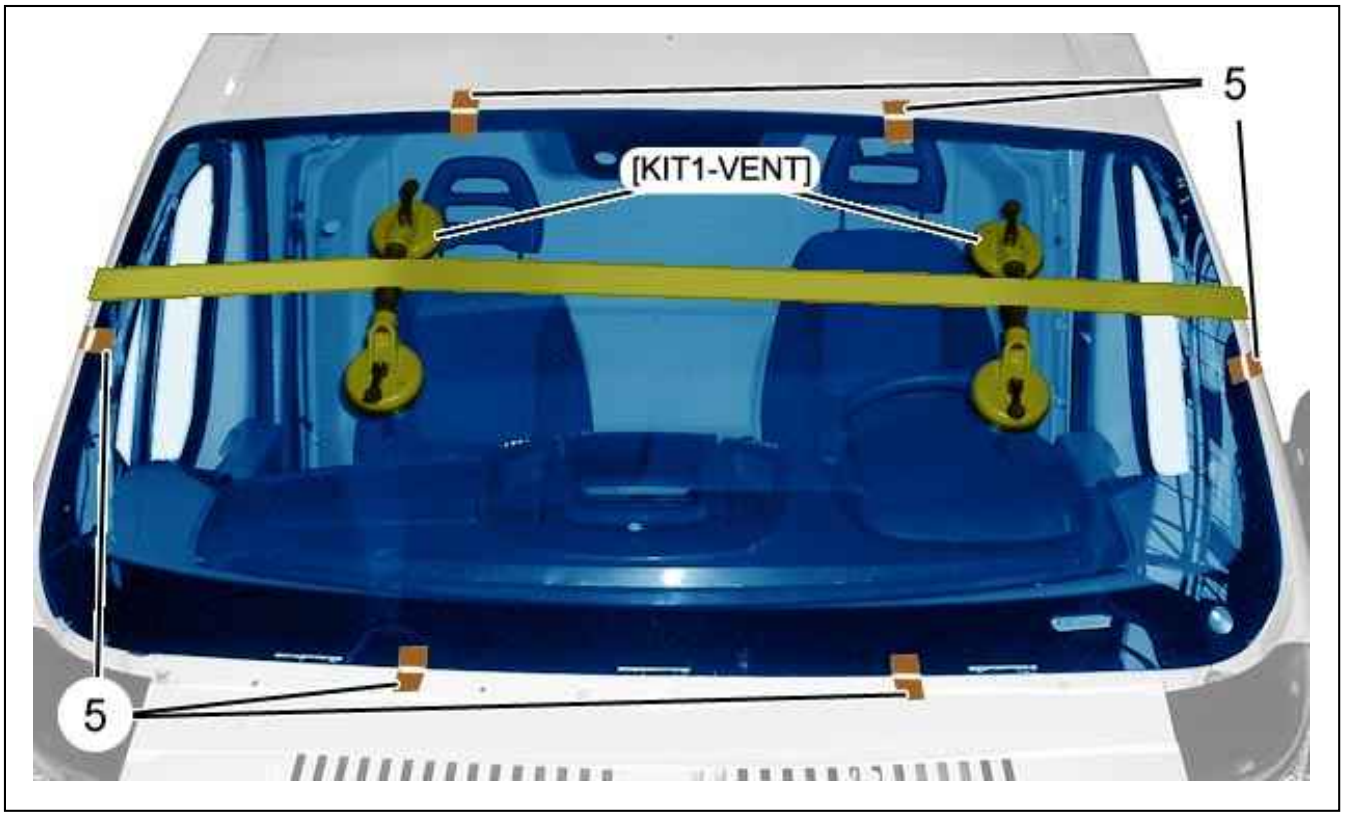

Figure : C5CP0A1D

Position the windscreen in relation to the adhesive strips (5).

CAUTION : Do not apply stress to the windscreen.

Position a strap on the tools [KIT1-VENT] to keep the windscreen in contact.
Allow to cure for 30 minutes before handling.
Check the sealing of the windscreen.
Proceed in the reverse order to removal.

REMOVING - REFITTING : FASCIA CROSSMEMBER

1. Removing

Remove :

- The fascia (see the relevant operation)
- The built-in systems interface (see the relevant operation)
- The selection lever (see the relevant operation)
- The steering column (see the relevant operation)

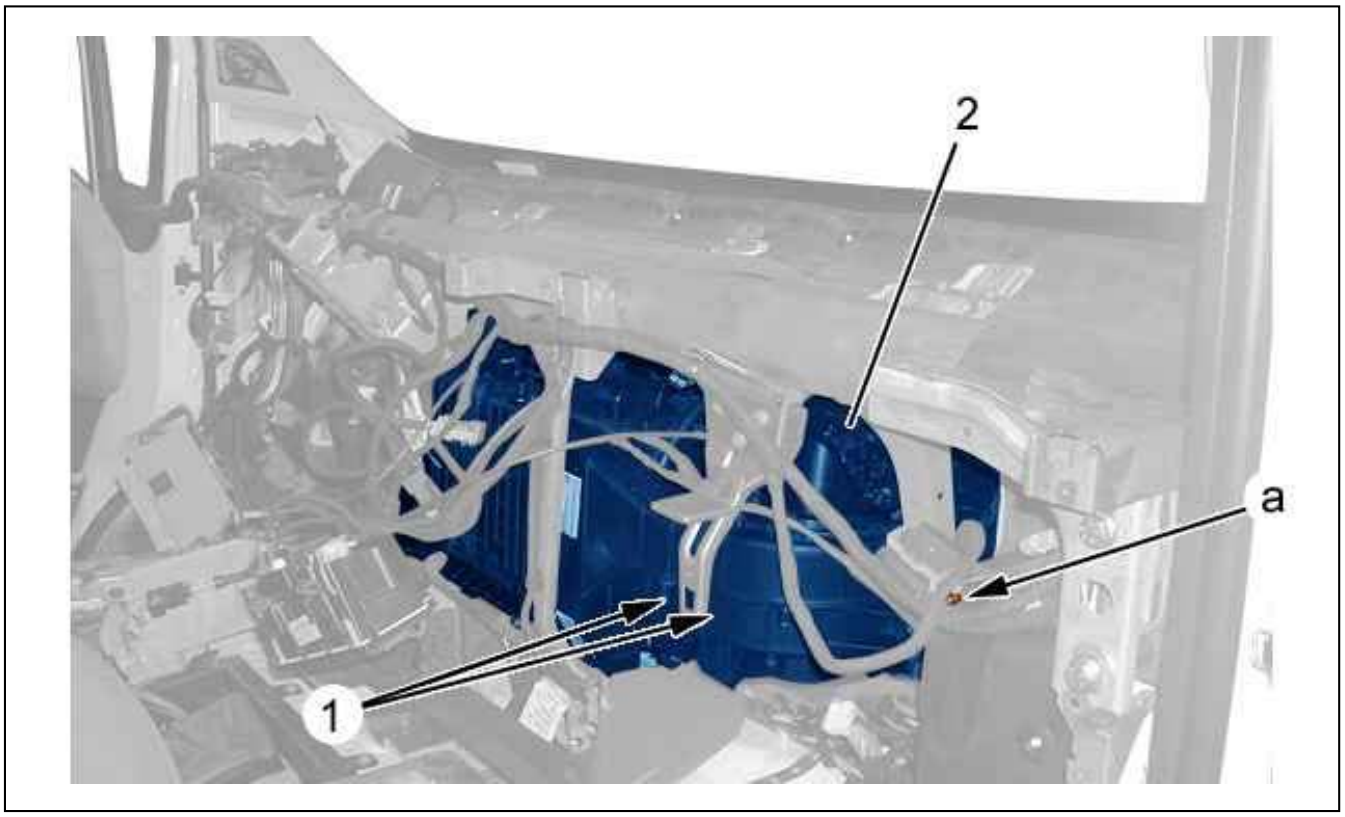

Figure : C5FP0YCD

Remove :

- The heater (2) bolt (at "a")
- The bolts (1)

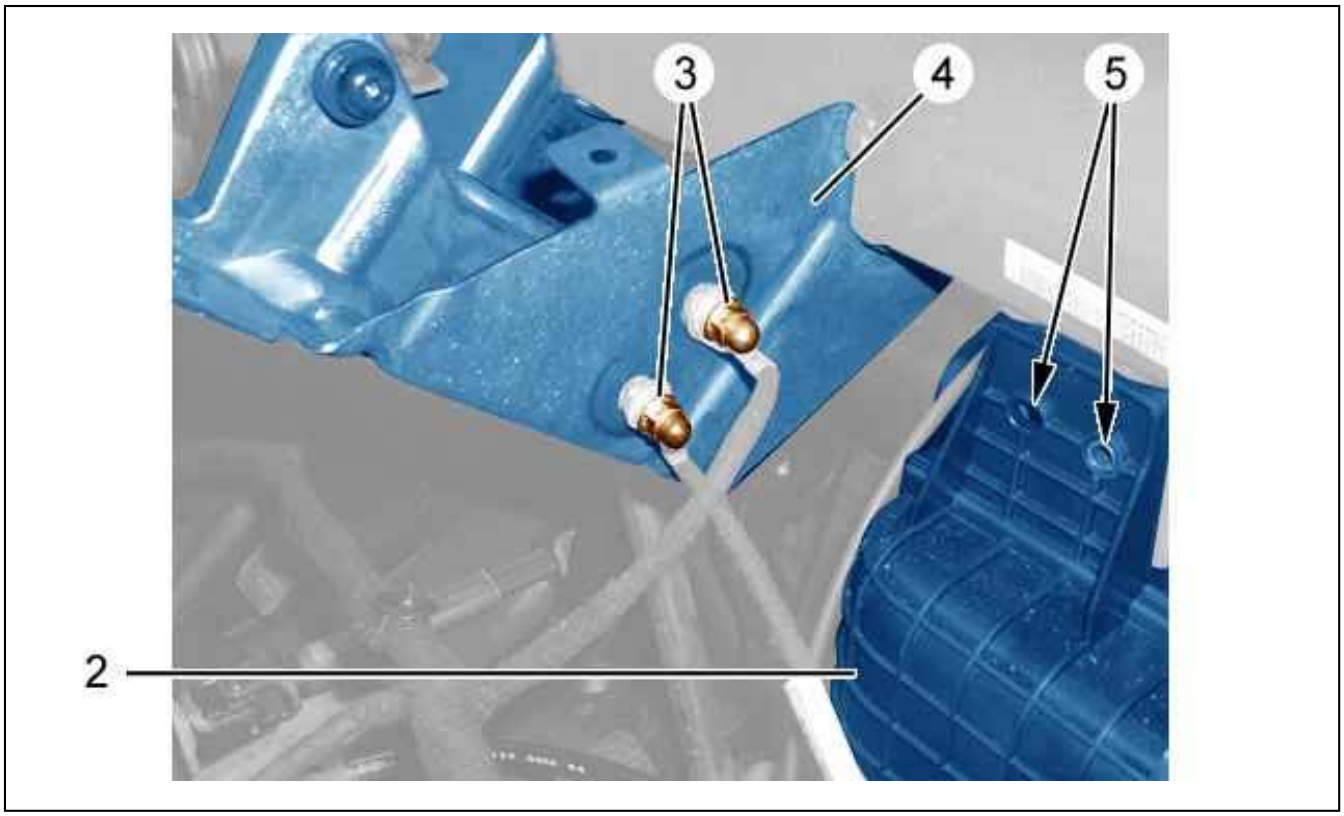

Figure : C5FP0YDD

Remove the gear lever support (4) bolts (3).
Disengage the earth wires.
Remove the heater (2) bolts (5).

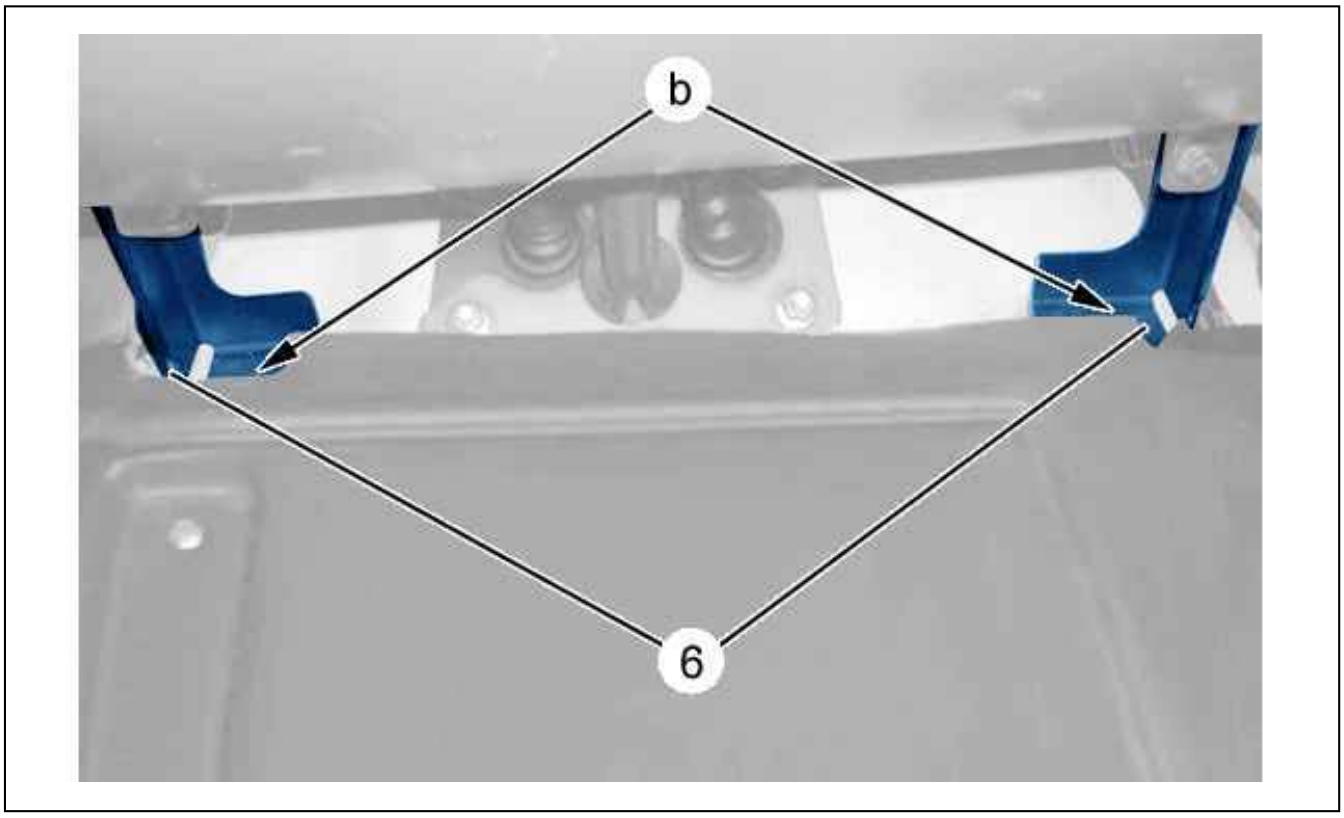

Figure : C5FP0YED

Remove the strengthening pillar (6) bolts (at "b").

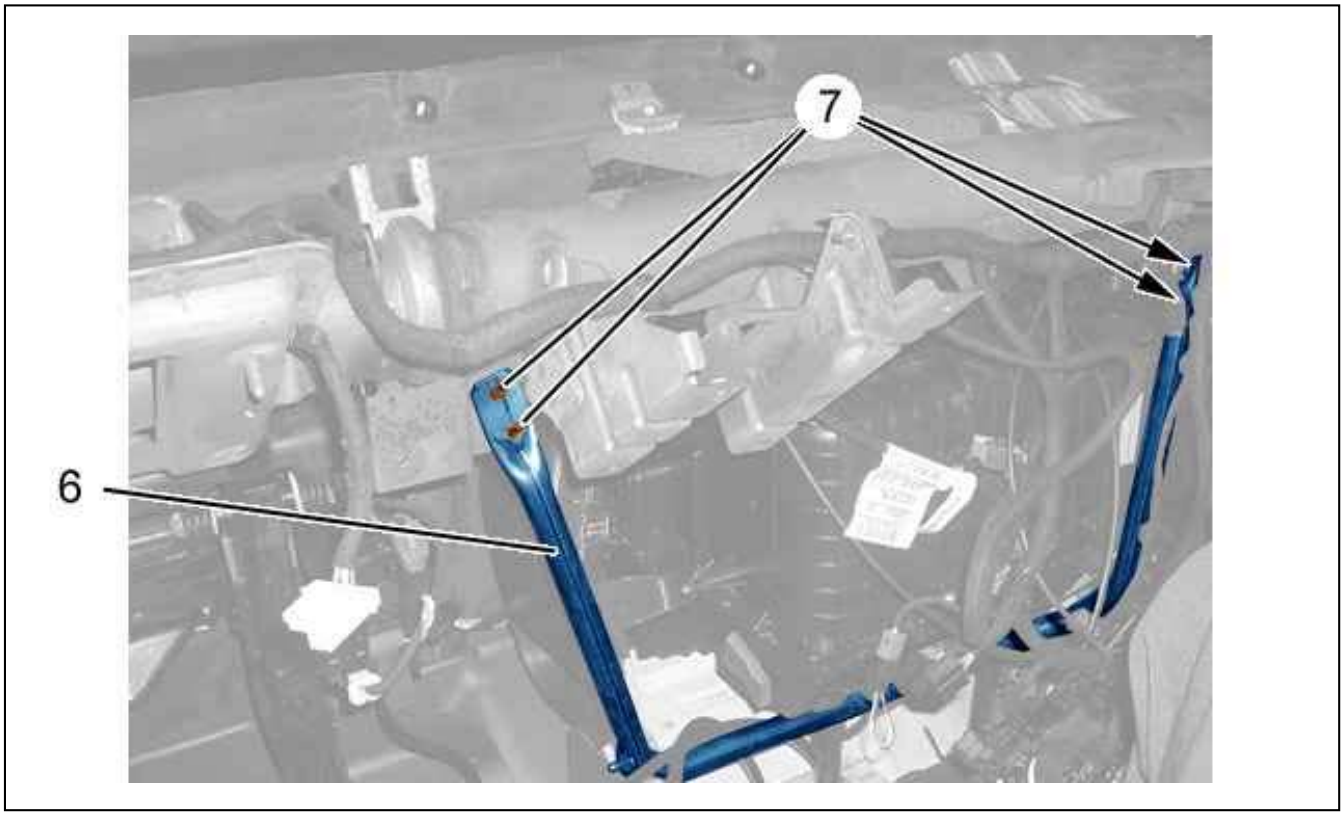

Figure : C5FP0YFD

Remove :

- The bolts (7)
- The strengthening strut (6)

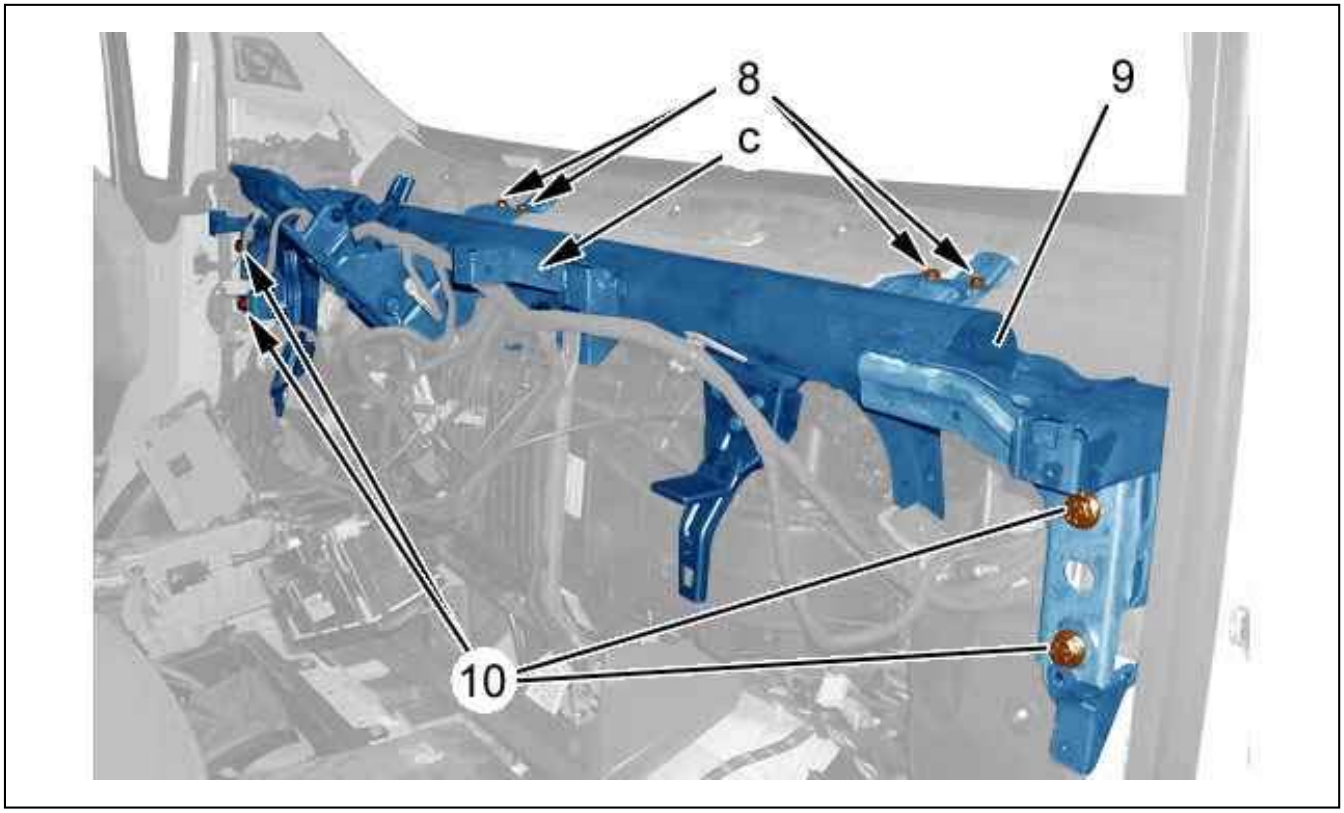

Figure : C5FP0YHD

Remove :

- The bolts (8)
- The fascia crossmember (9) bolts (at "c")
- The bolts (10)

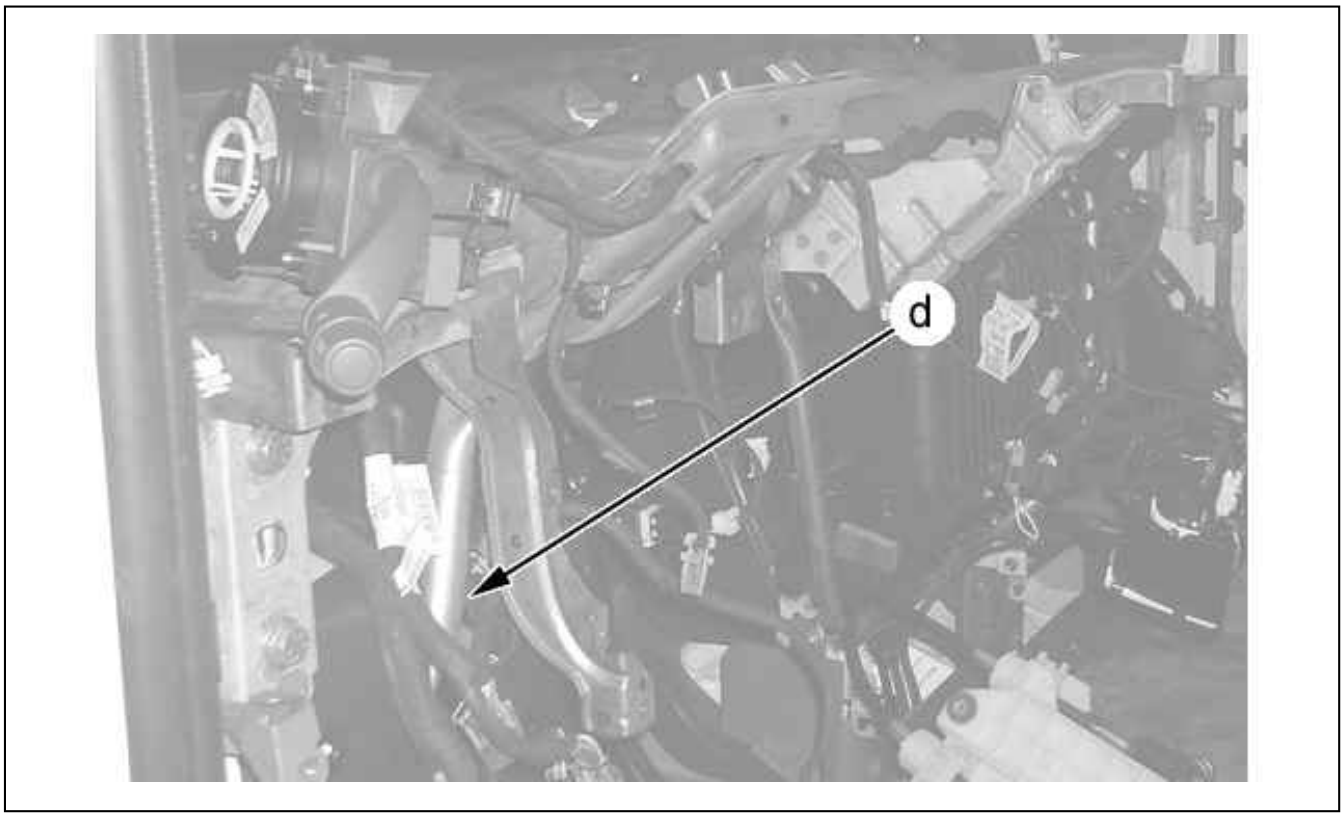

Figure : C5FP0YJD

Remove :

- The strengthener bolt (at "d")
- The fascia crossmember harness
- The dashboard cross member (9)

2. Refitting

Proceed in the reverse order to removal.
Tighten :

- The screws at " b ", "c" and "d" : 0,8 ± 0,1 daNm
- The screws (1), (3), (5) and (7) : 0,8 ± 0,1 daNm
- The bolts (8) : 1,5 ± 0,1 daNm
- The bolts (10) : 3,5 ± 0,3 daNm

REPAIR : OF PLASTIC BY WELDING

ESSENTIAL : Observe the safety and cleanliness recommendations .

1. Tooling

N.B. : Refer to the tools catalogue.

Repair kit for plastics.

Designation	Material
PP	Polypropylene
PA	Polyamide
PP-EPDM or P/E	Ethylene Di-Propylene
ABS	Acrylonitrile butadiene styrene

2. Preparing the zone to be repaired

Wash the component to be repaired using a high pressure washer, then dry it.

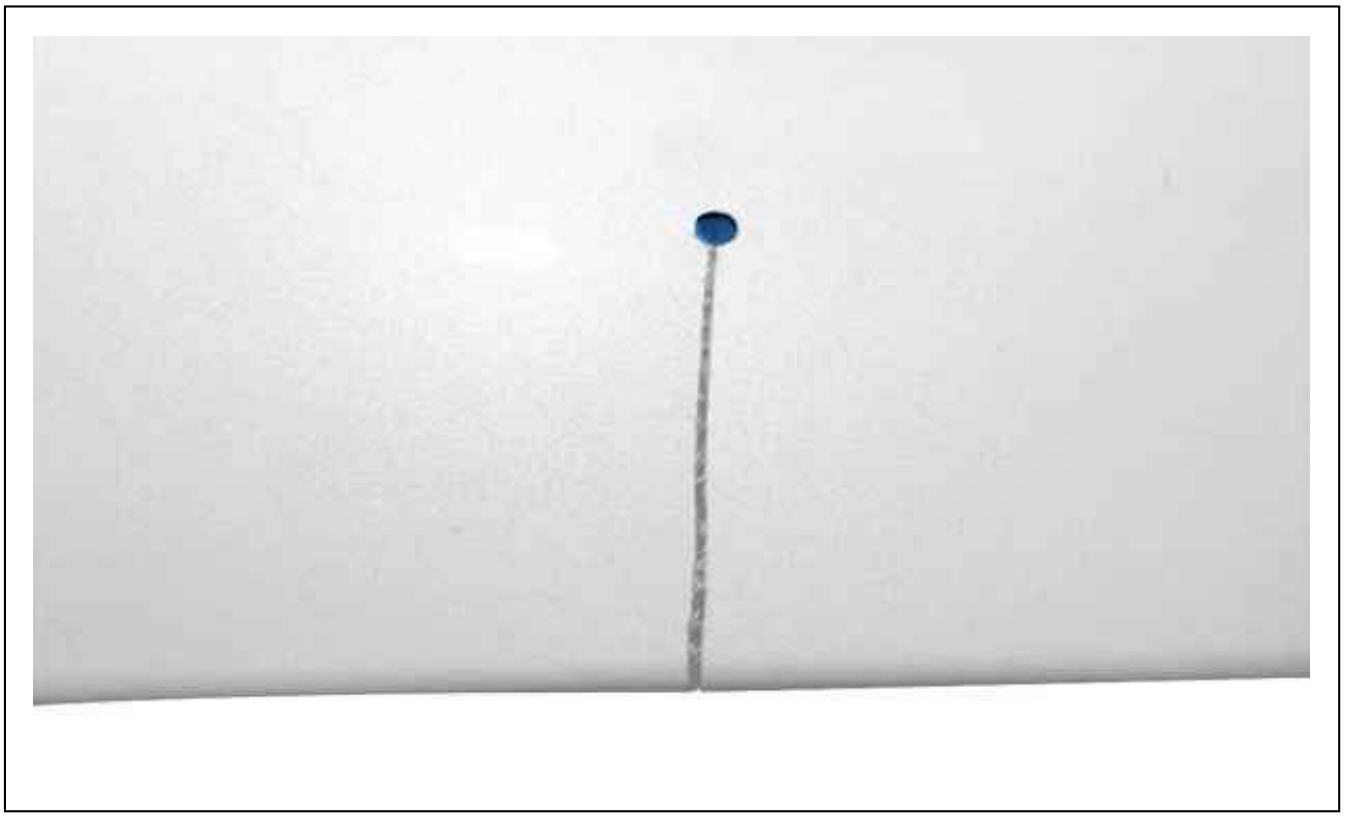

Figure : C5GM1FPD

Stop the cracking ; Using a 4 mm diameter drill bit.

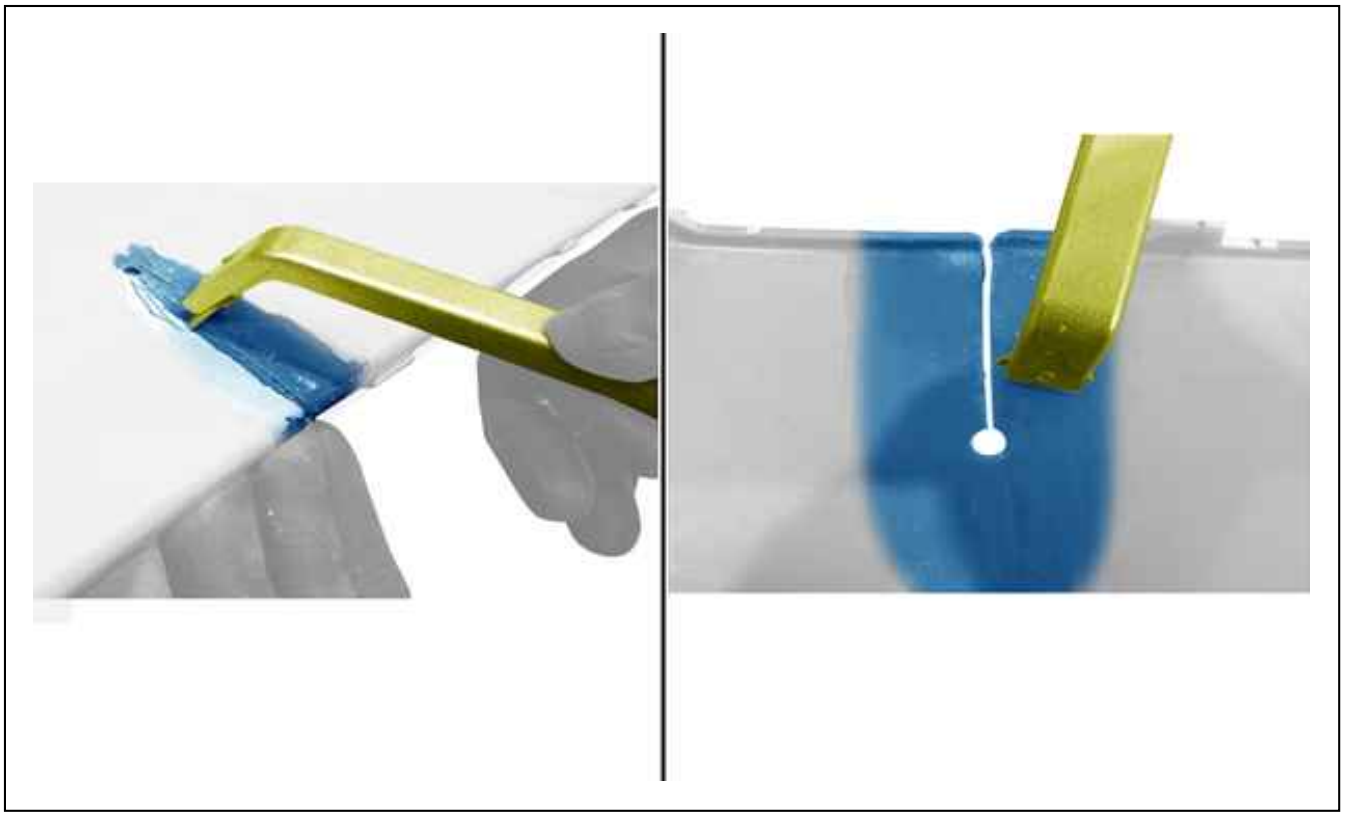

Figure : C5GM1FSD

Scrape the paint along the length of the crack until there is bare plastic visible on the inside and outside ; Using the scraper.

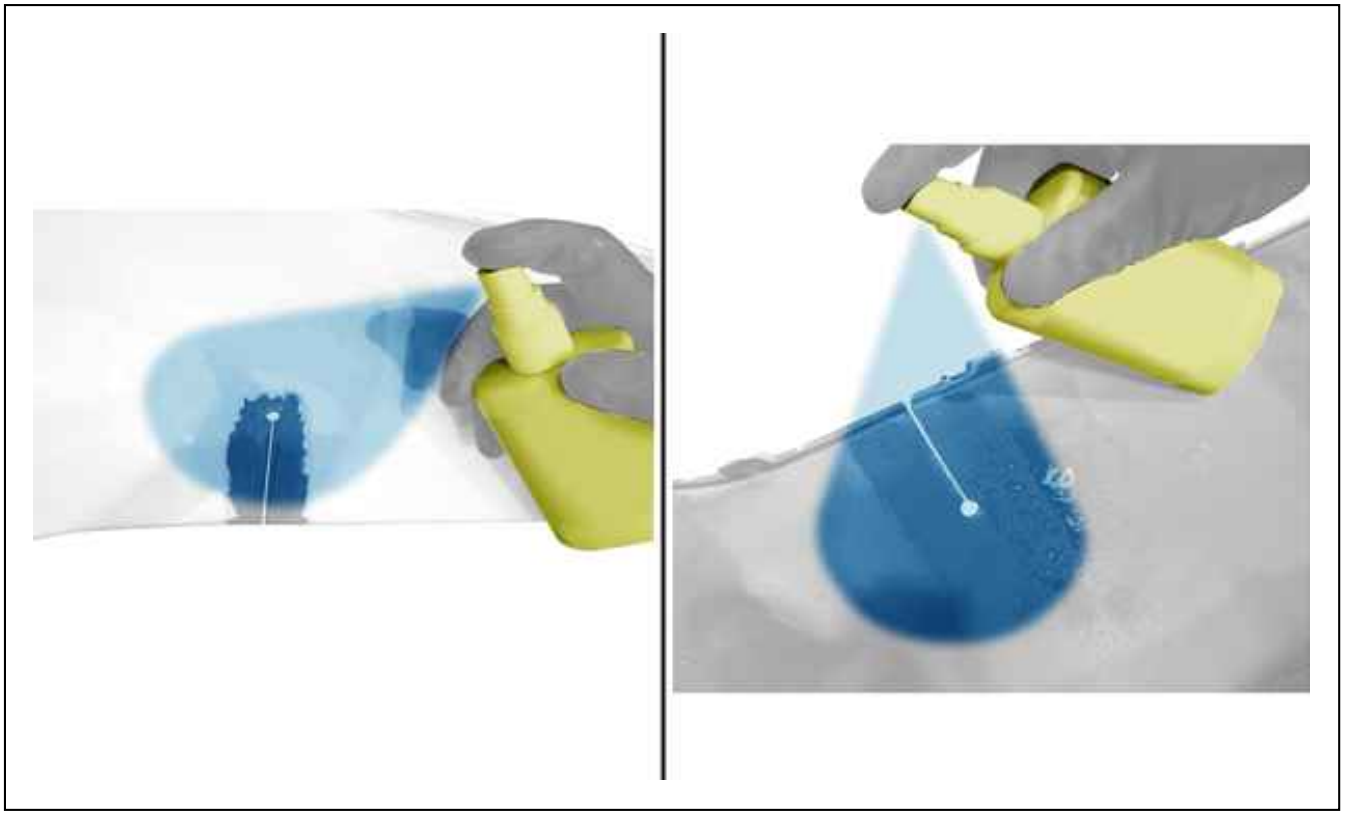

Figure : C5GM1FVD

Degrease the zone to be repaired on the inside and outside ; Using a special degreaser (see operating instructions).



Figure : C5GM1FYD

Identify the nature of the plastic that is to be repaired "P/E" (See table of descriptions).

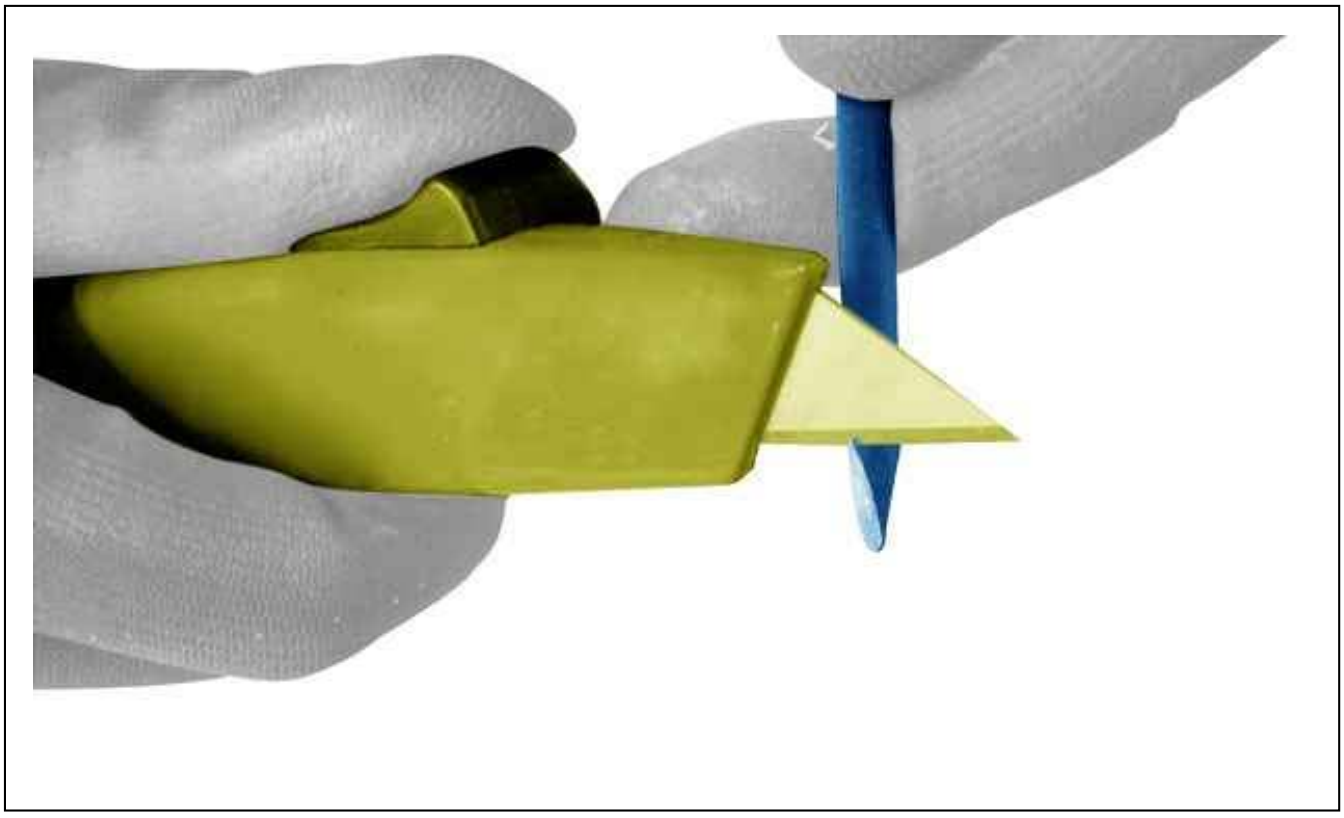

Figure : C5GM1G1D

Bevel the end of the strip corresponding to the material to be repaired ; Using a sharp-edged tool.

3. Welding

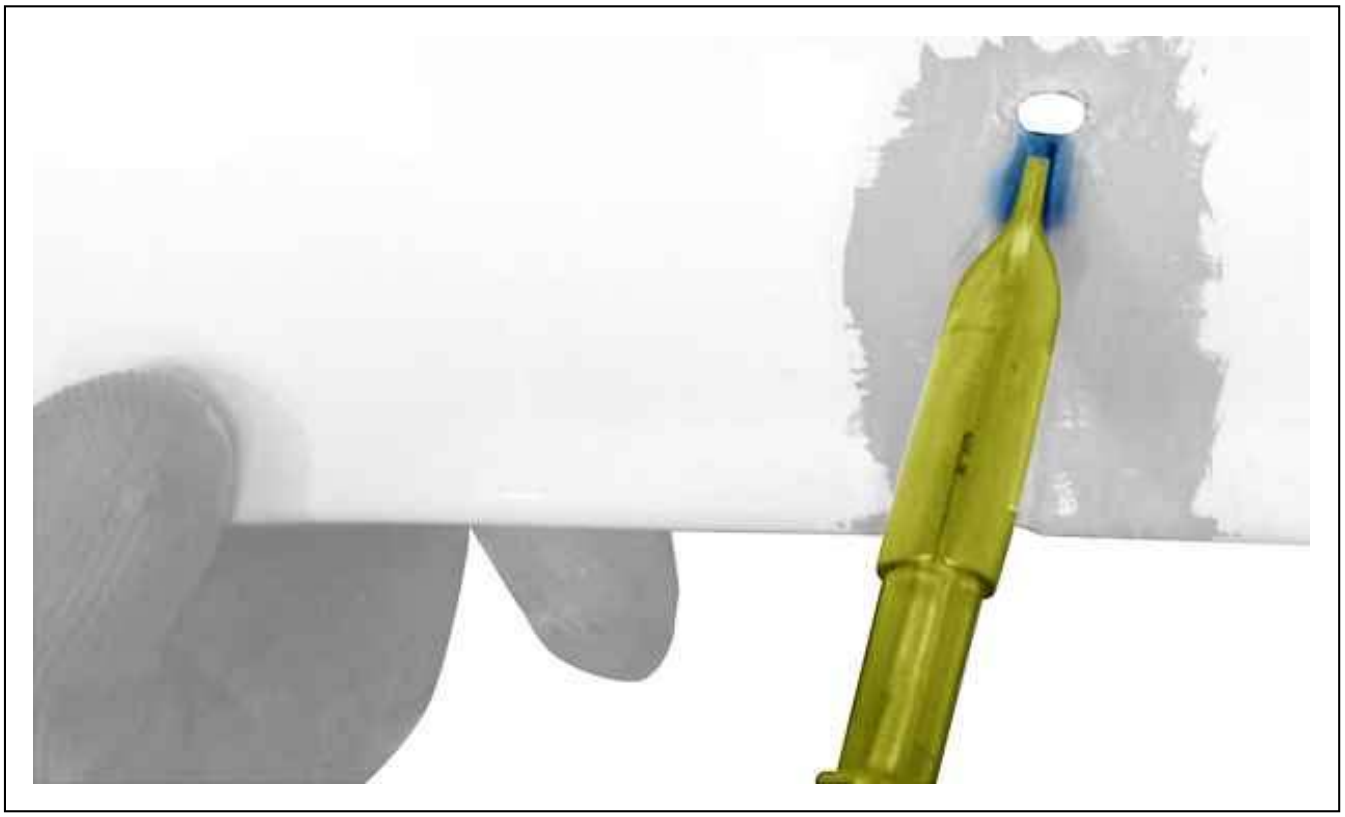

Figure : C5GM1G4D

Do a welding run to close the crack and to pre-heat the plastic ; Using the hot air gun fitted with the welding nozzle to adjust the temperature (see operating instructions).

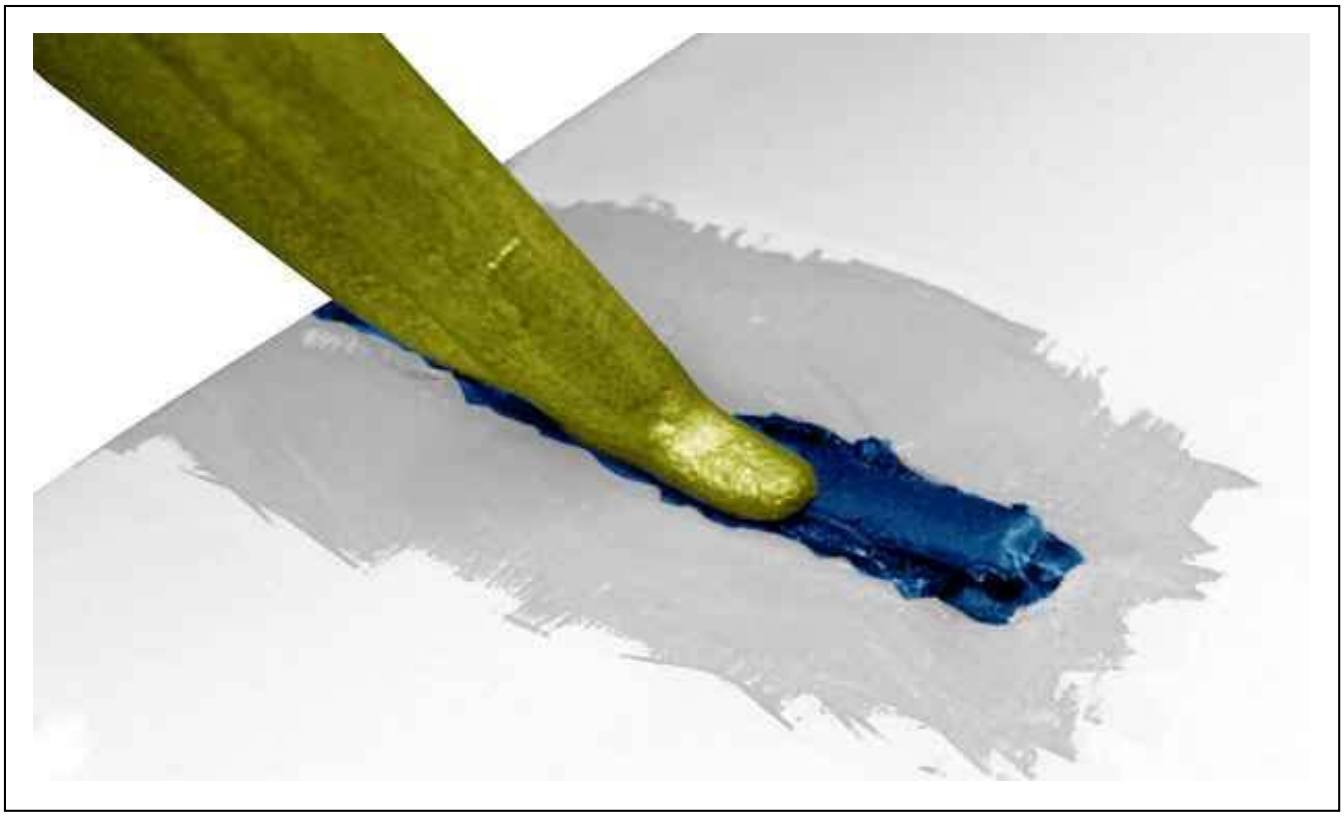

Figure : C5GM1G7D

N.B. : Use the welding strip corresponding to the type of plastic (see operating instructions).

Fit the hot air gun with the welding nozzle.
Position the strip in the welding nozzle (Bevelled point in the lead).

N.B. : Advance from the drill hole outwards on the full length of the crack Keep advancing as you see the strip startin
to melt on the support.

Perform the welding (Bevelled point into the crack).

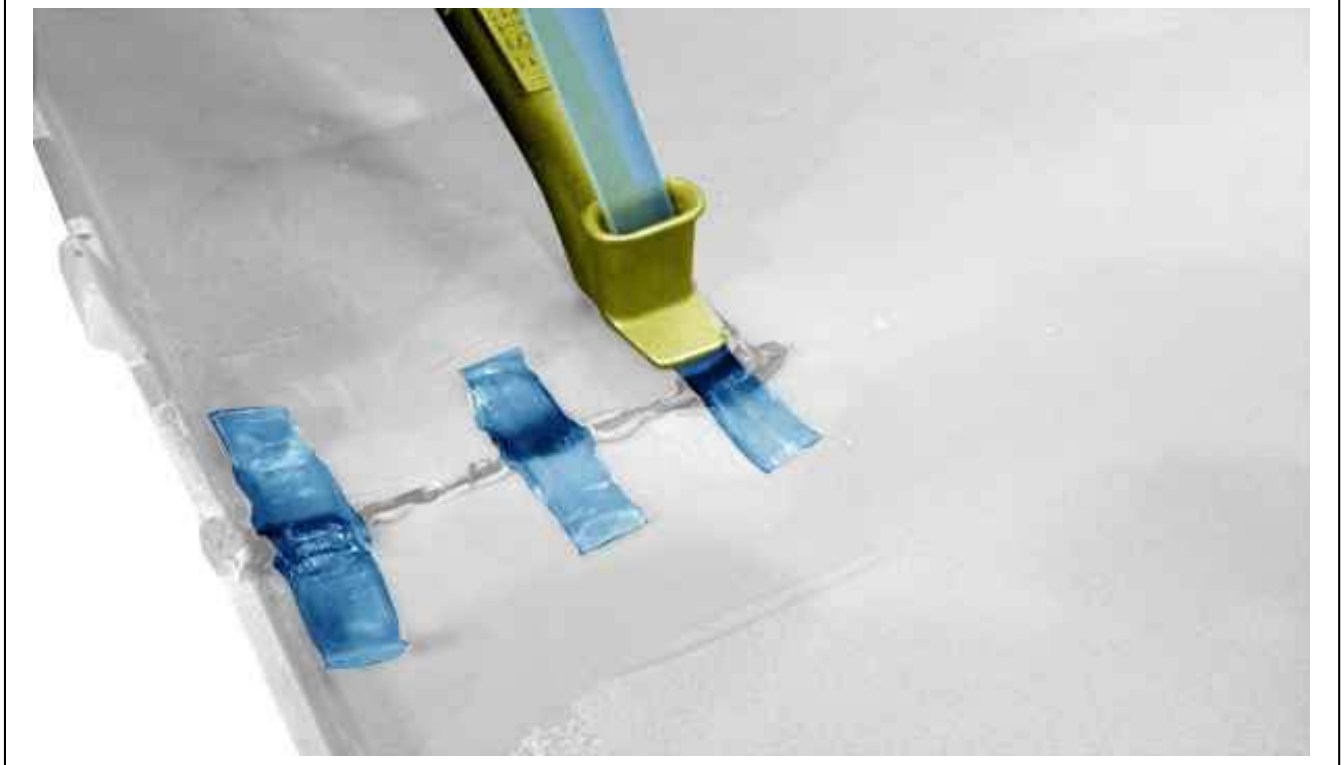

Figure : C5GM1GAD

N.B. : Use the flat strip corresponding to the type of plastic (see operating instructions).

Apply stiffeners on the inside ; Using flat strips and the stiffener nozzle.

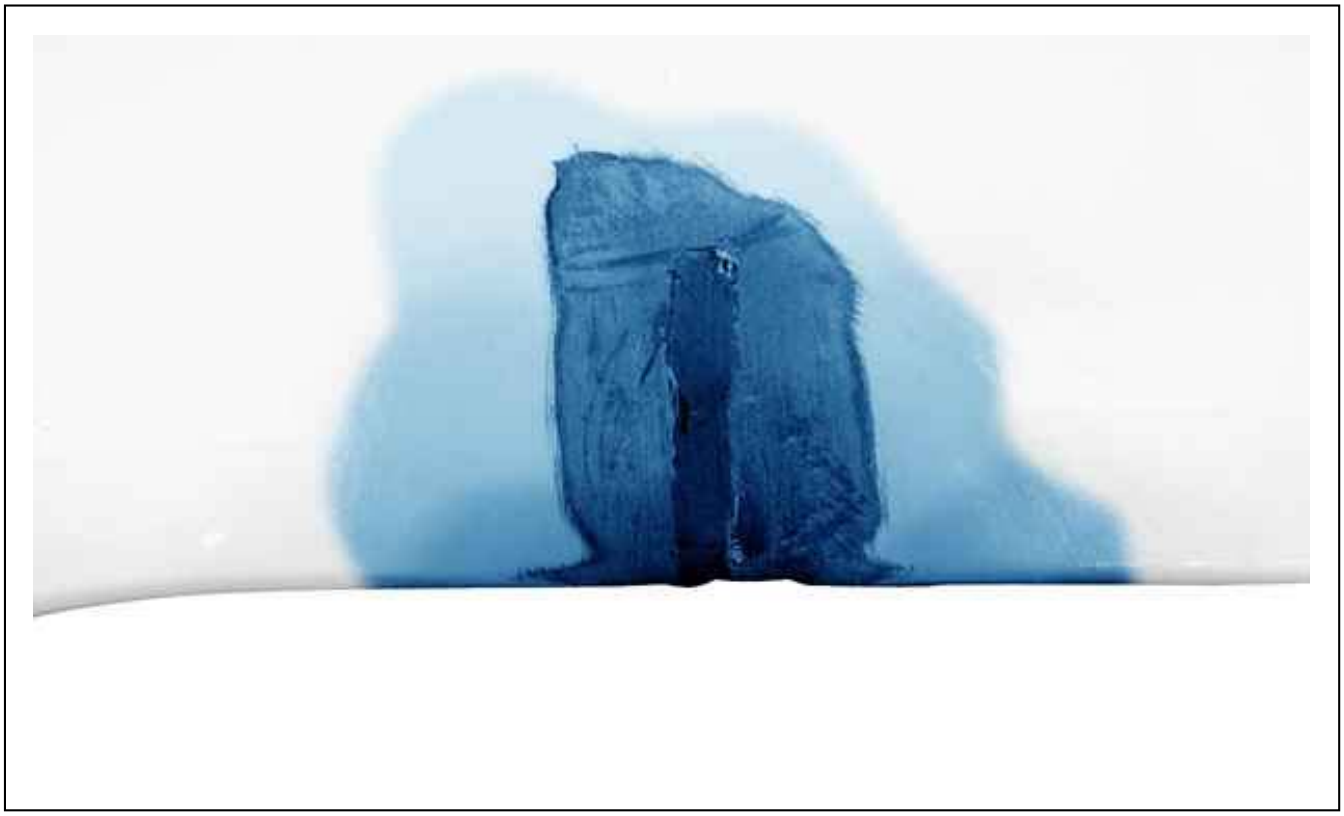

Figure : C5GM1GDD

Smooth the repaired surface with abrasive ; Using an orbital sander.

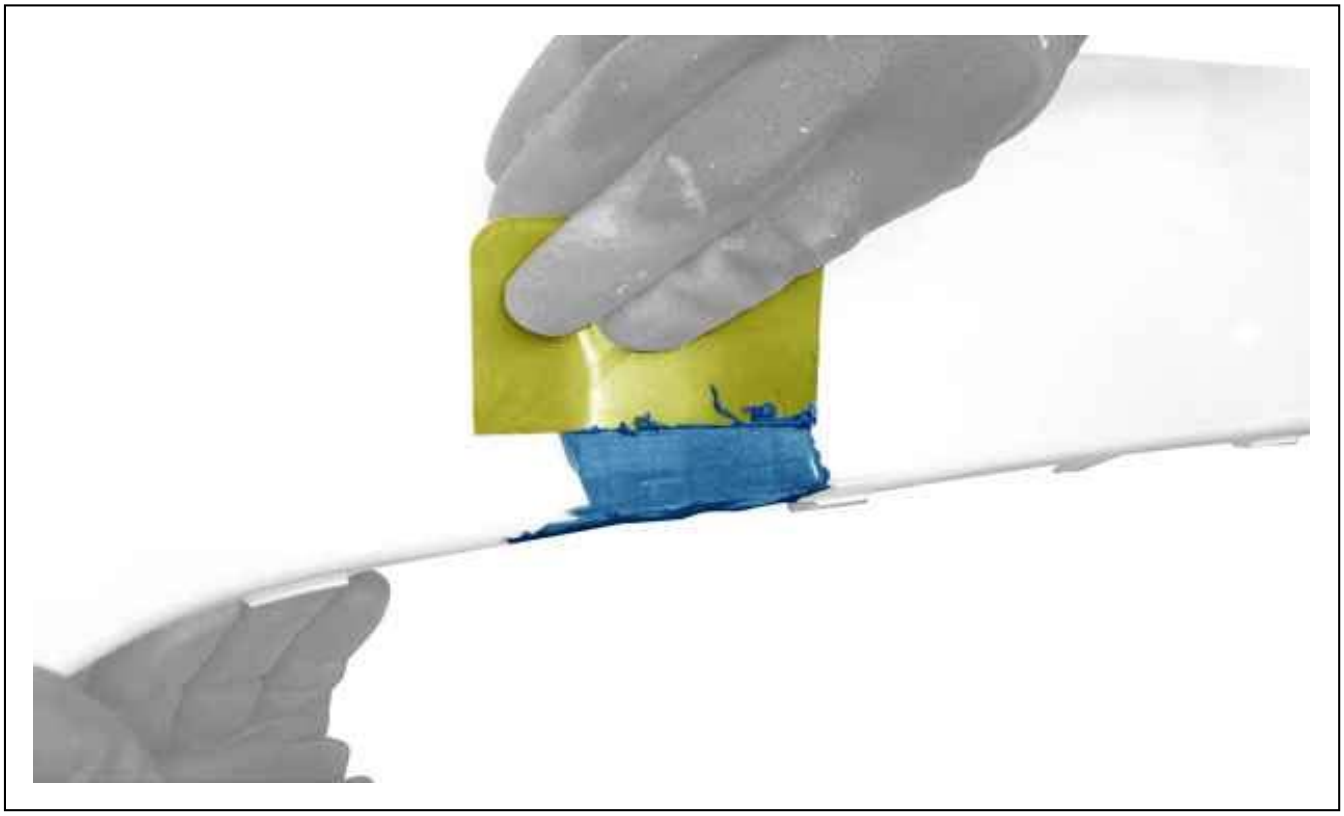

Figure : C5GM1GGD

N.B. : Degrease the zone ; Using a special degreaser (see operating instructions).

Apply a finishing mastic on the weld ; Using the spatula .

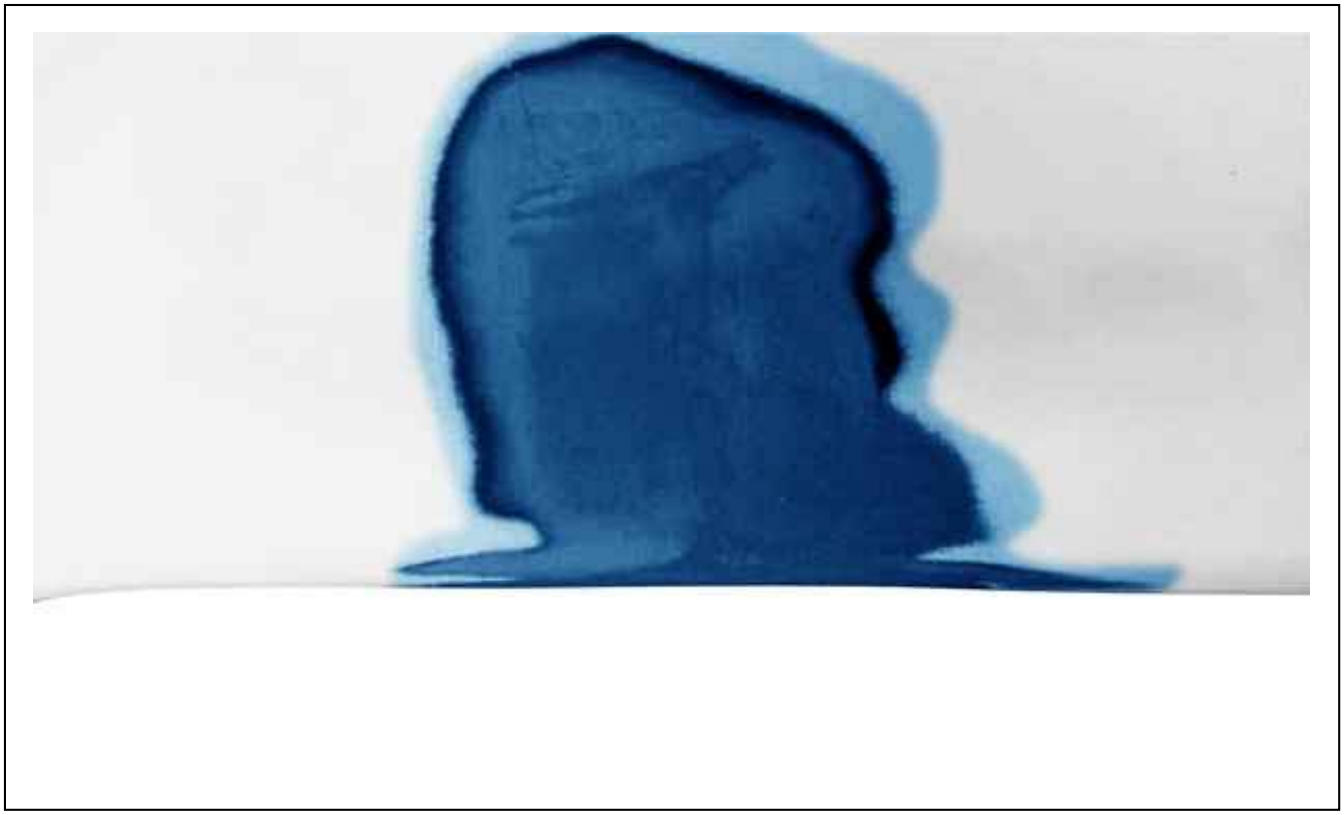

Figure : C5GM1GJD

Smooth the finishing mastic to recreate the original form of the component.
Apply a primer for plastics (see operating instructions).
Paint the component.

REMOVING - REFITTING : FRONT BUMPER CROSSMEMBER

1. Preliminary operation

ESSENTIAL : Deactivate the pneumatic suspension before lifting the vehicle (2 or 4 post lift, workshop jack or vehicle jack).

Remove the front bumper (see the relevant operation).

2. Removing

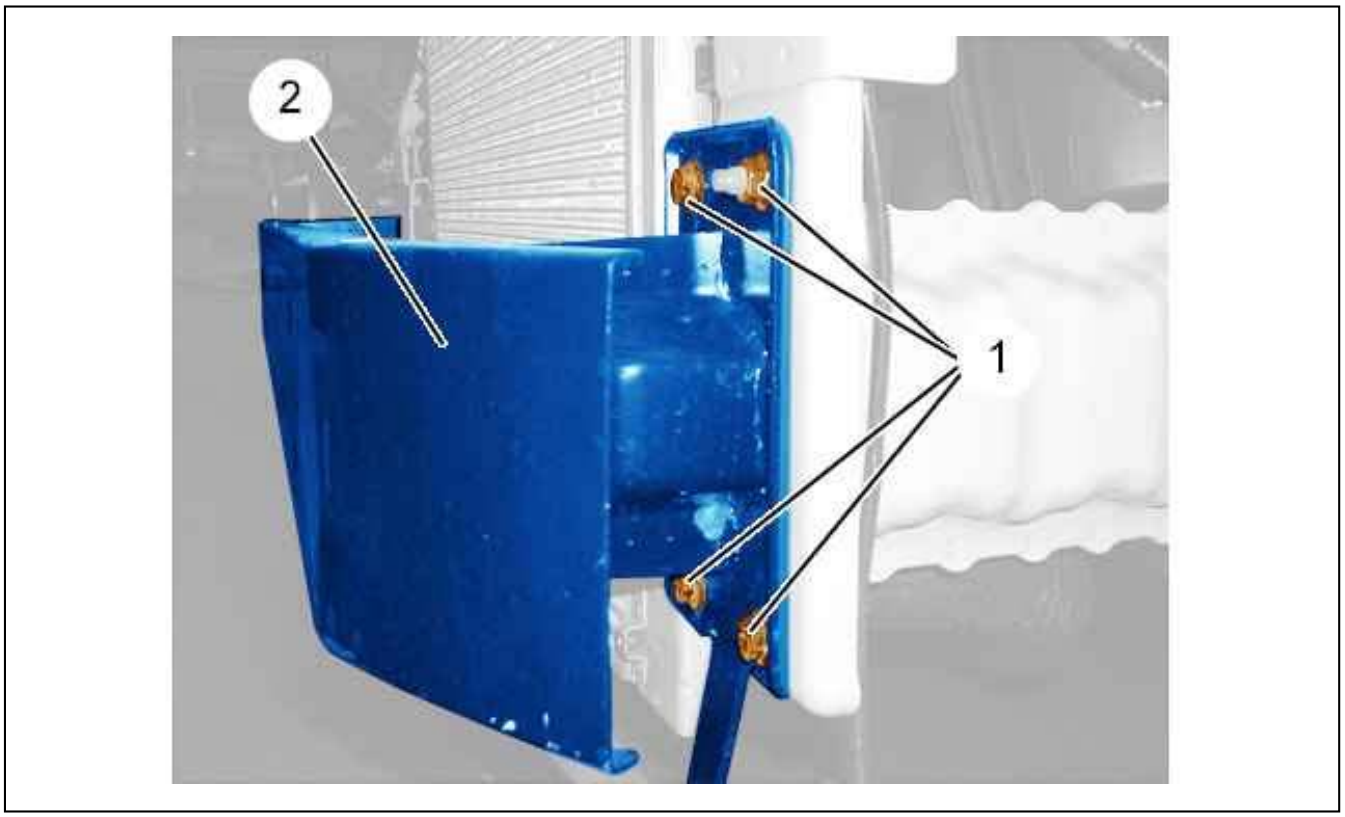

Figure : C4AP1M6D

Remove the bolts (1).
Proceed in the same way for the other side.
Remove the front bumper crossmember (2).

3. Refitting

Proceed in the reverse order to removal.
Tighten the bolts (1) to 4 m.daN .

REMOVING - REFITTING : FRONT BUMPER

1. Removing

ESSENTIAL : Deactivate the pneumatic suspension before lifting the vehicle (2 or 4 post lift, workshop jack or vehicle jack).

Open the bonnet.
Remove :

- The headlamps (see the relevant operation)
- The front splash shields (see the relevant operation)

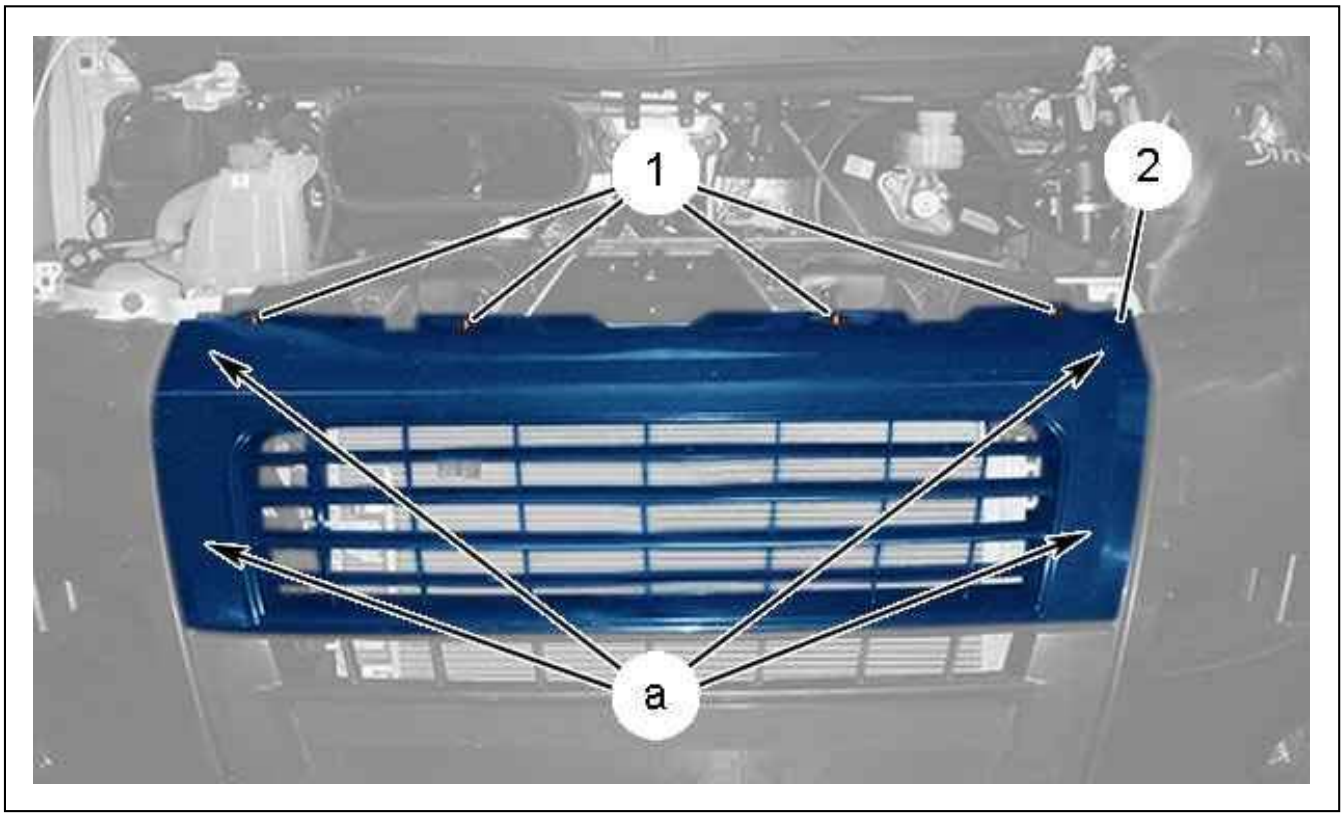

Figure : C4AP1N5D

Remove the bolts (1).
Unclip the upper central bumper (2) (at "a").
Remove the upper central bumper (2).

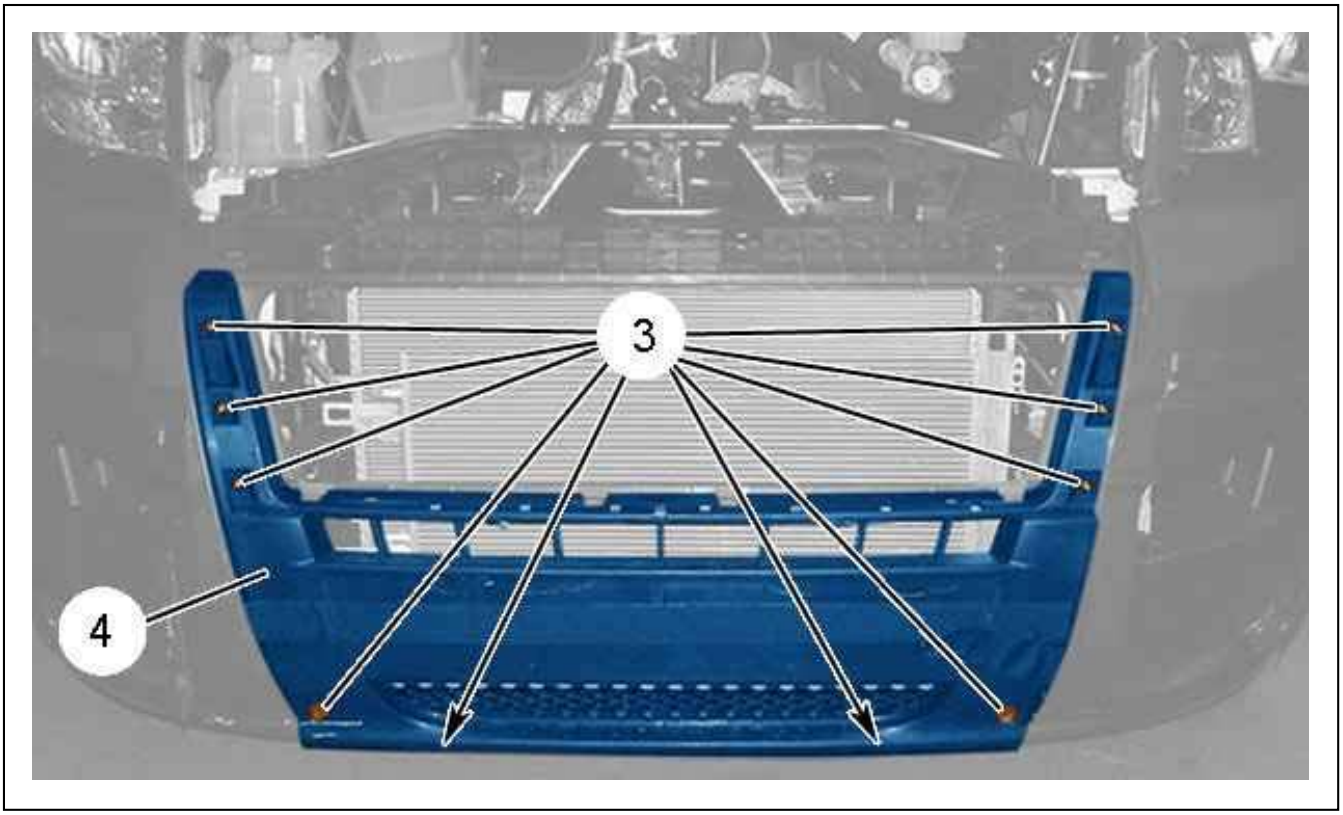

Figure : C4AP1N6D

Remove :

- The bolts (3)
- The lower central bumper (4)

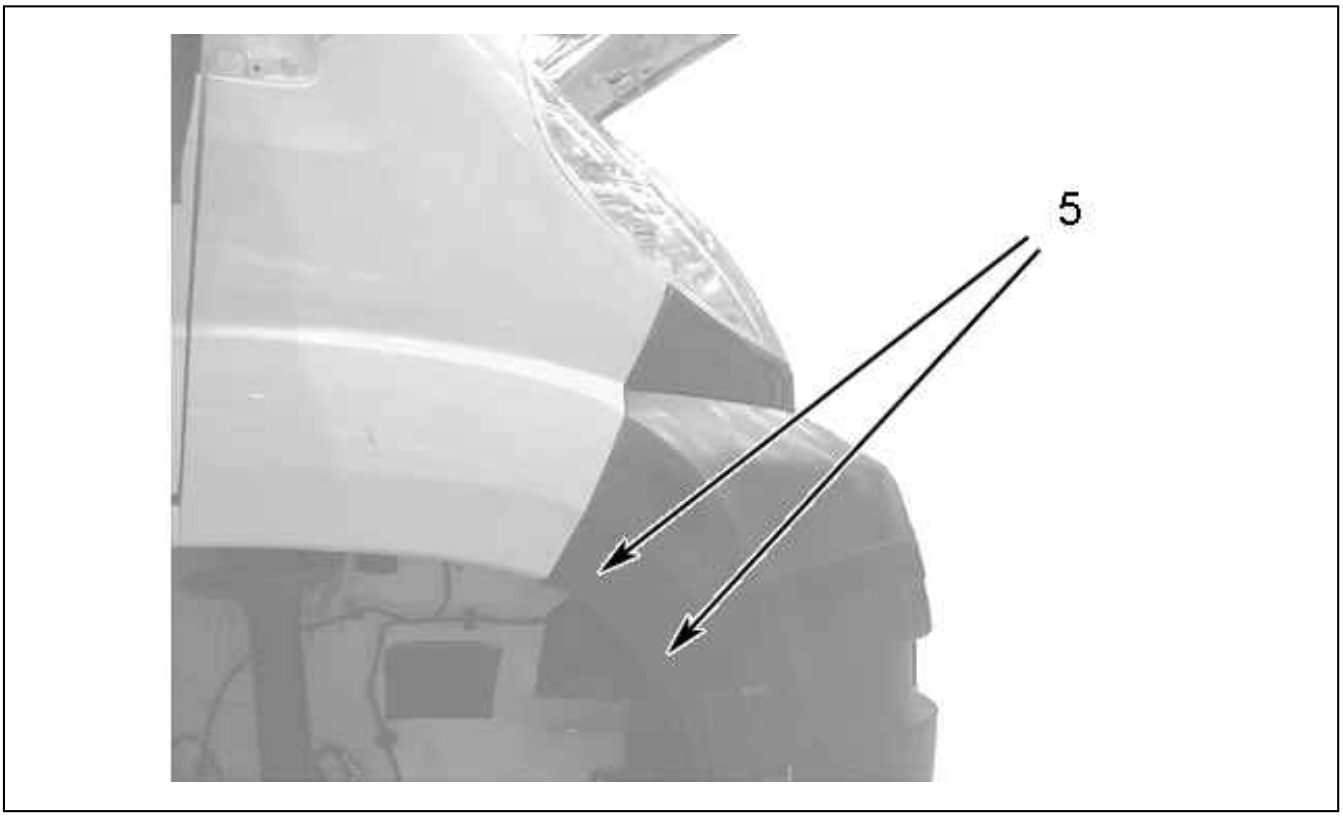

Figure : C4CP1P9D

Remove the bolts (5).
Proceed in identical fashion for the other side.

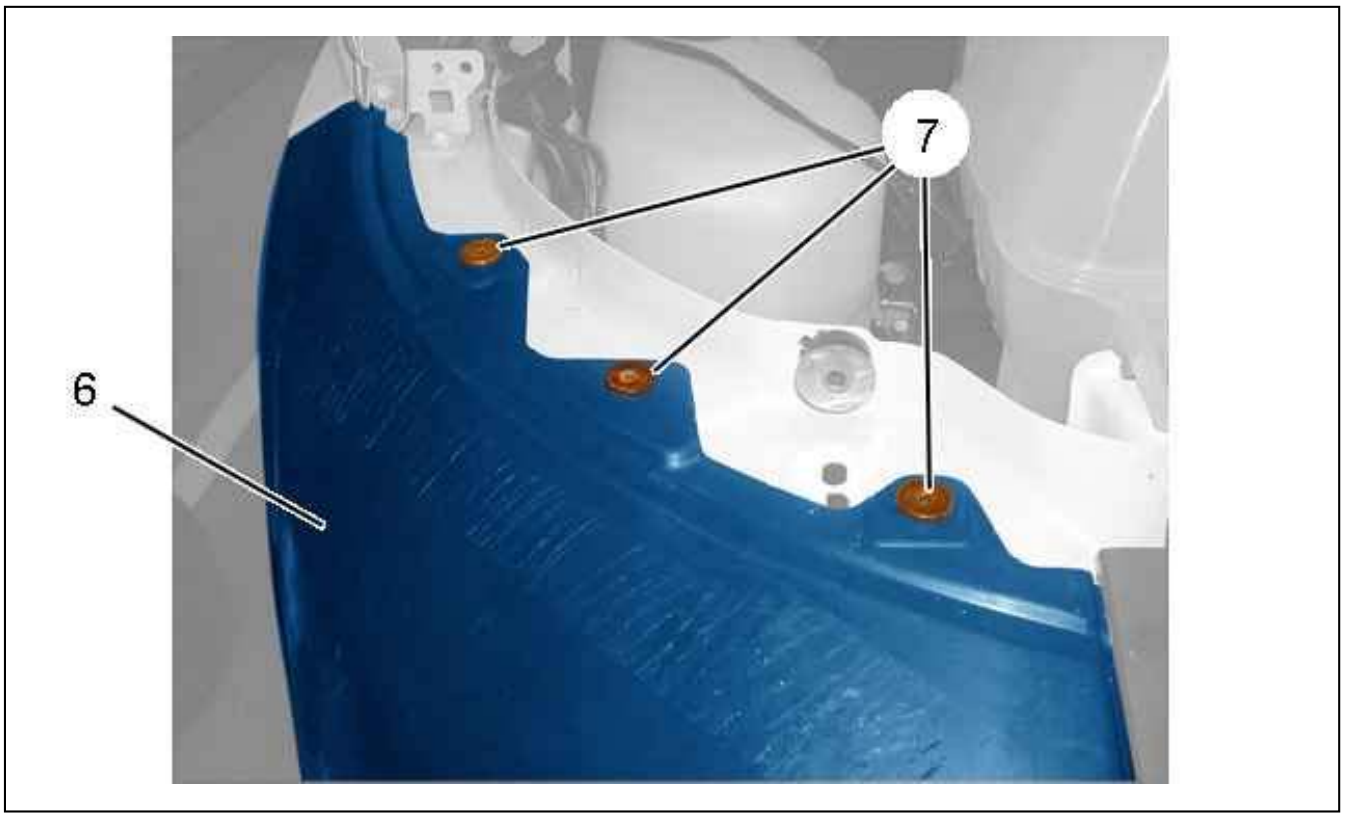

Figure : C4AP1N7D

Remove the right-hand bumper (6) screws (7).
Proceed in identical fashion for the other side.

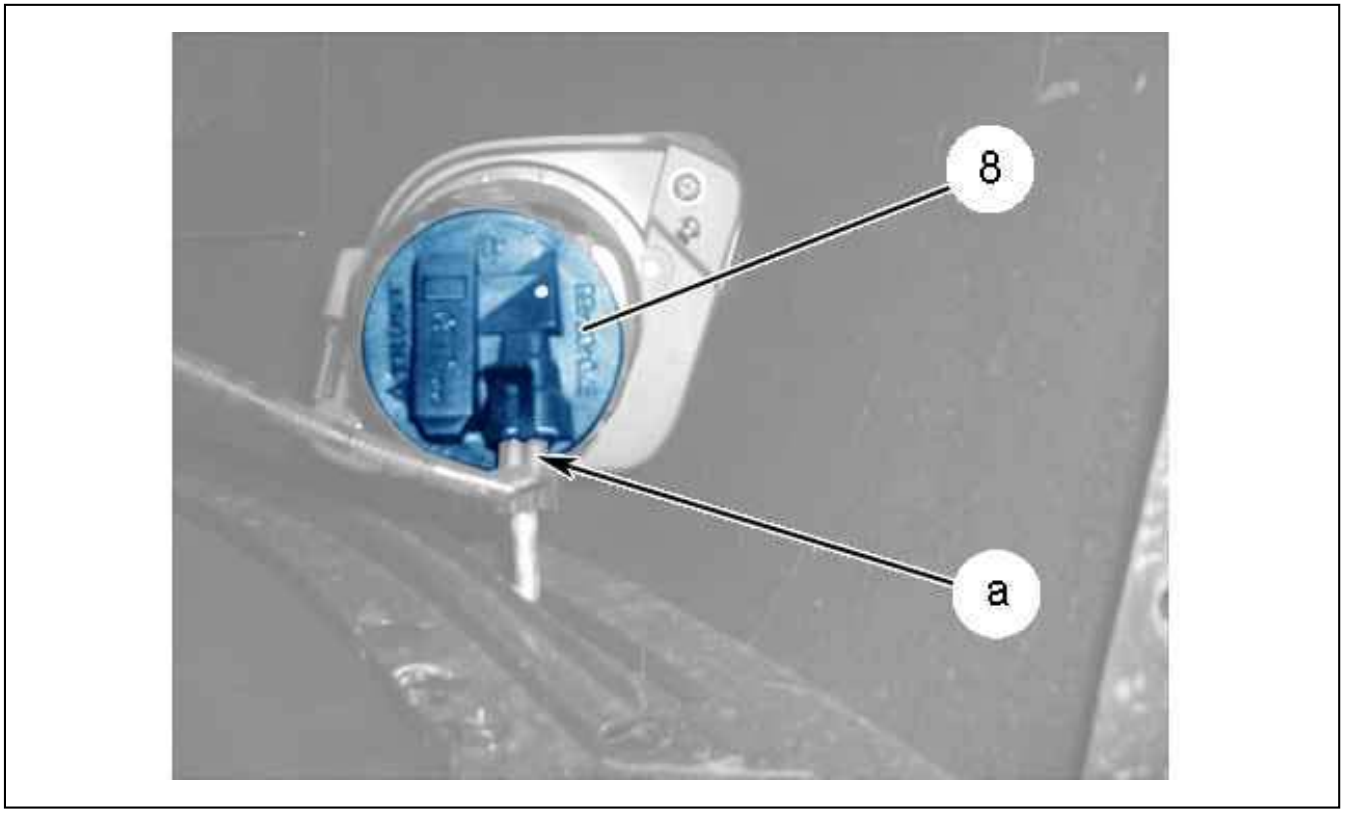

Figure : C5JP0D5D

Disconnect the front foglamp (8) connector (a).
Proceed in identical fashion for the other side.

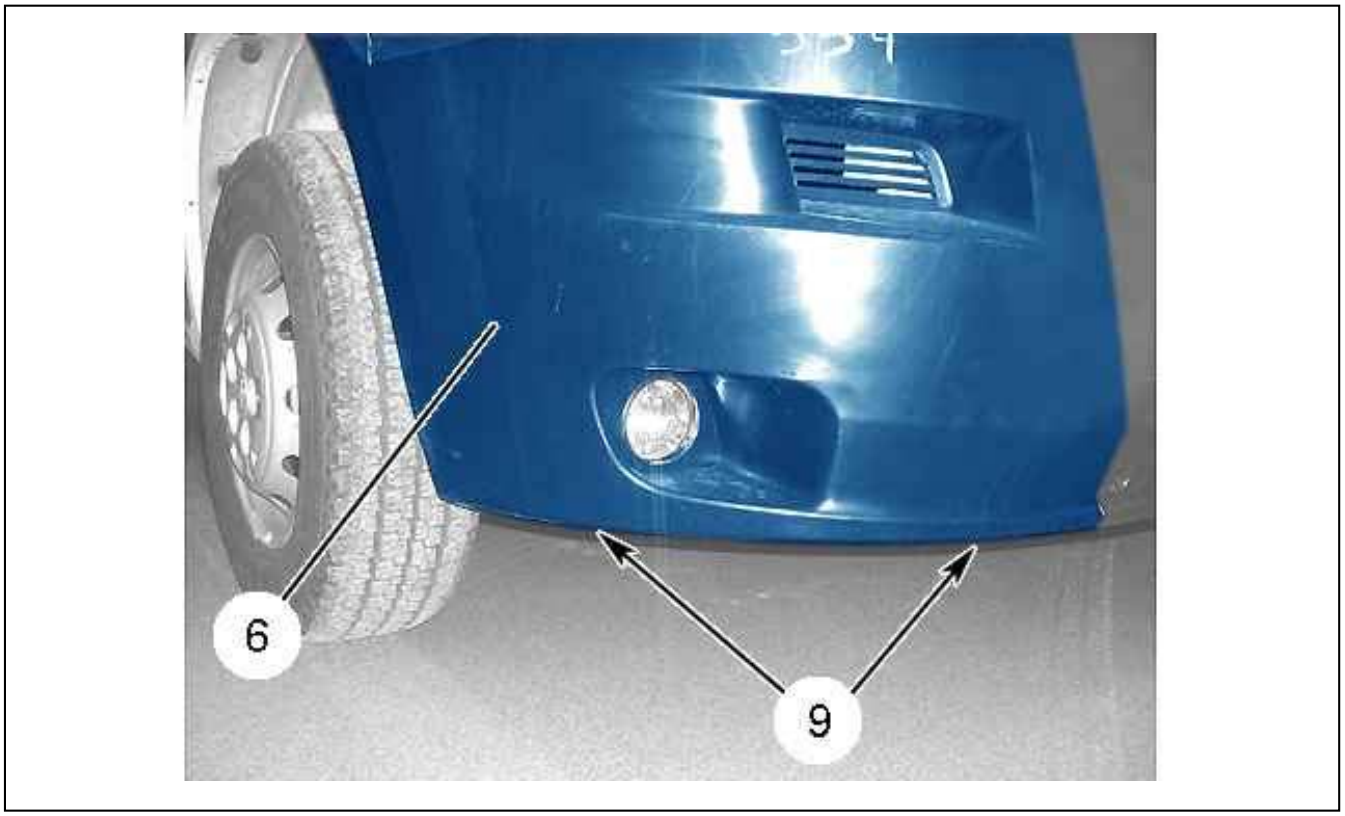

Figure : C4CP1PAD

Remove :

- The right-hand bumper (6) bolts (9)
- The right-hand bumper (6)

Proceed in identical fashion for the other side.

2. Refitting

Proceed in the reverse order to removal.
Check the electric operation.

REPAIR : PLASTIC

ESSENTIAL : Observe the safety and cleanliness recommendations .

1. Tooling

N.B. : Refer to the tools catalogue.

Repair kit for plastics.

Designation	Material
PP	Polypropylene
PA	Polyamide
PP-EPDM or P/E	Ethylene Di-Propylene
ABS	Acrylonitrile butadiene styrene

2. Preparing the zone to be repaired



Figure : C5JM0LVD

Clean :

- The component to be repaired using a high pressure washer, then dry it
- The zone to be repaired, on the inside and outside, using the cleaning product ; Using a clean cloth (see operatir instructions)

Wait for the cleaning product to evaporate completely (approx. 5 minutes).

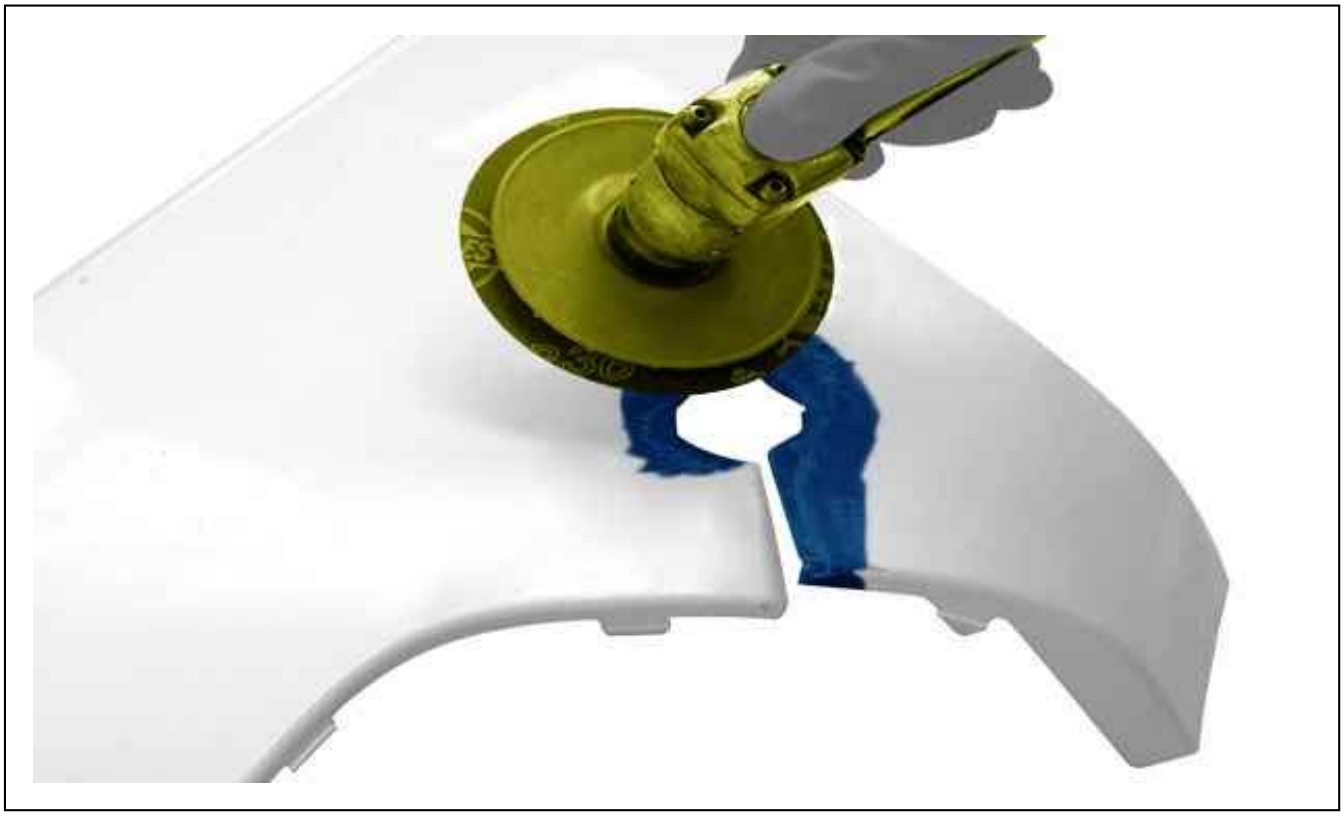

Figure : C5JM0LYD

Chamfer the outer edges of the zone to be repaired over 1 to 2 centimetres ; Using a grinding disc.

N.B. : Put the disc to low speed rotation.

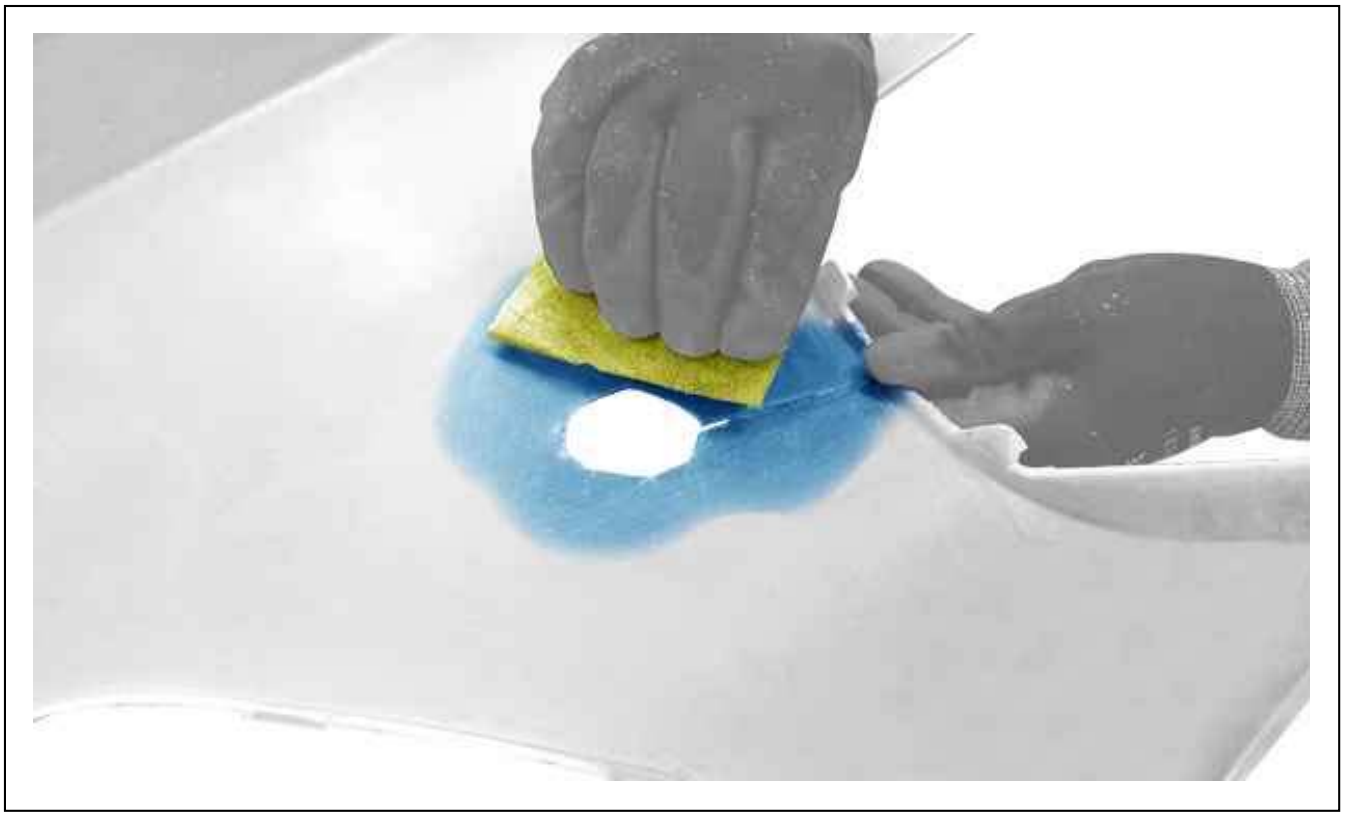

Figure : C5JM0M1D

Smooth the zone to be repaired, inside and outside.



Figure : C5JM0M4D

Clean The zone to be repaired, on the inside and outside, using the cleaning product ; Using a clean cloth.

3. Application

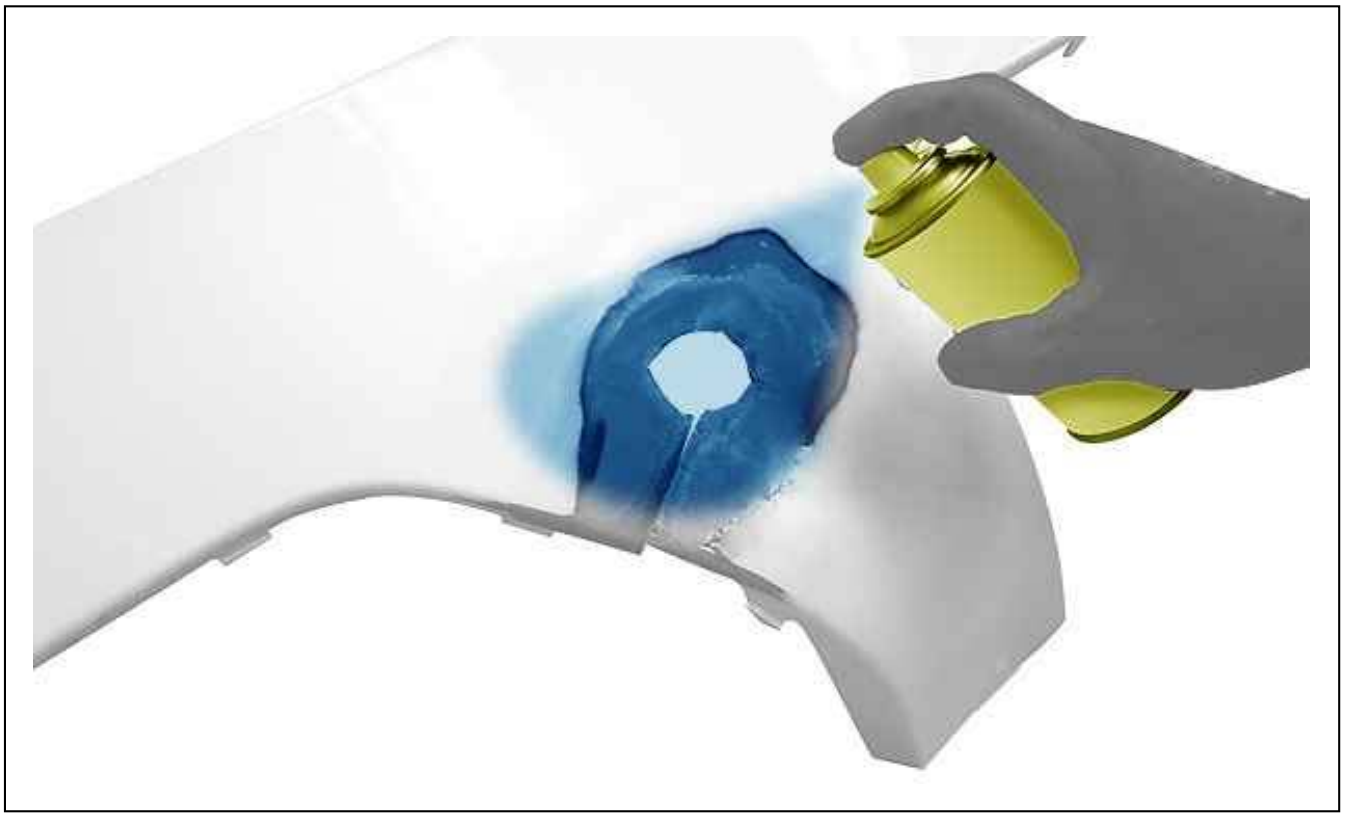

Figure : C5JM0M7D

CAUTION : When applying the primer : Do not overload the zone to be repaired.

Apply the primer (only a very thin layer) on the zone to be repaired, inside and outside.
Leave to dry for 10 minutes at ambient temperature.

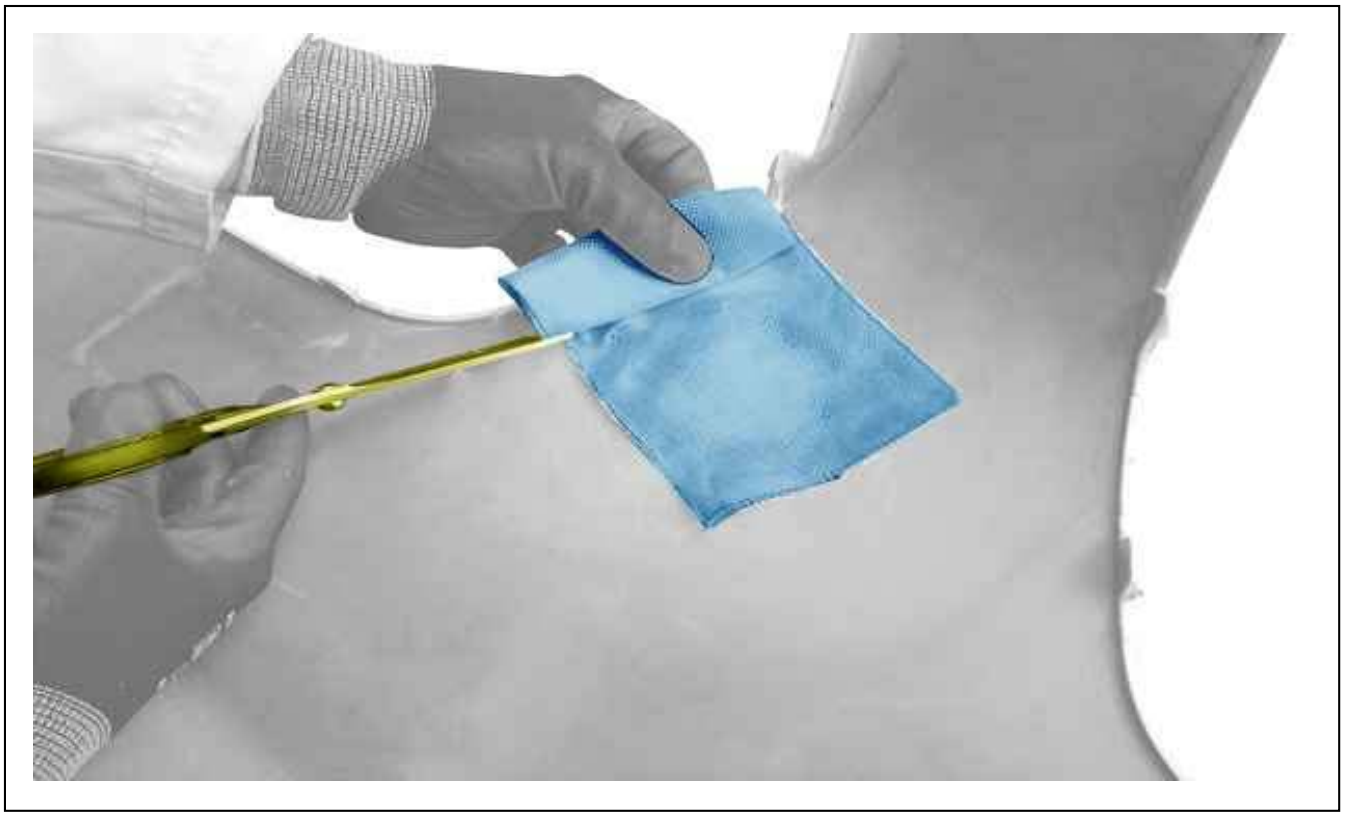

Figure : C5JM0MAD

Prepare the glass fibre stiffener strip, to overlap the repair zone by a wide margin.

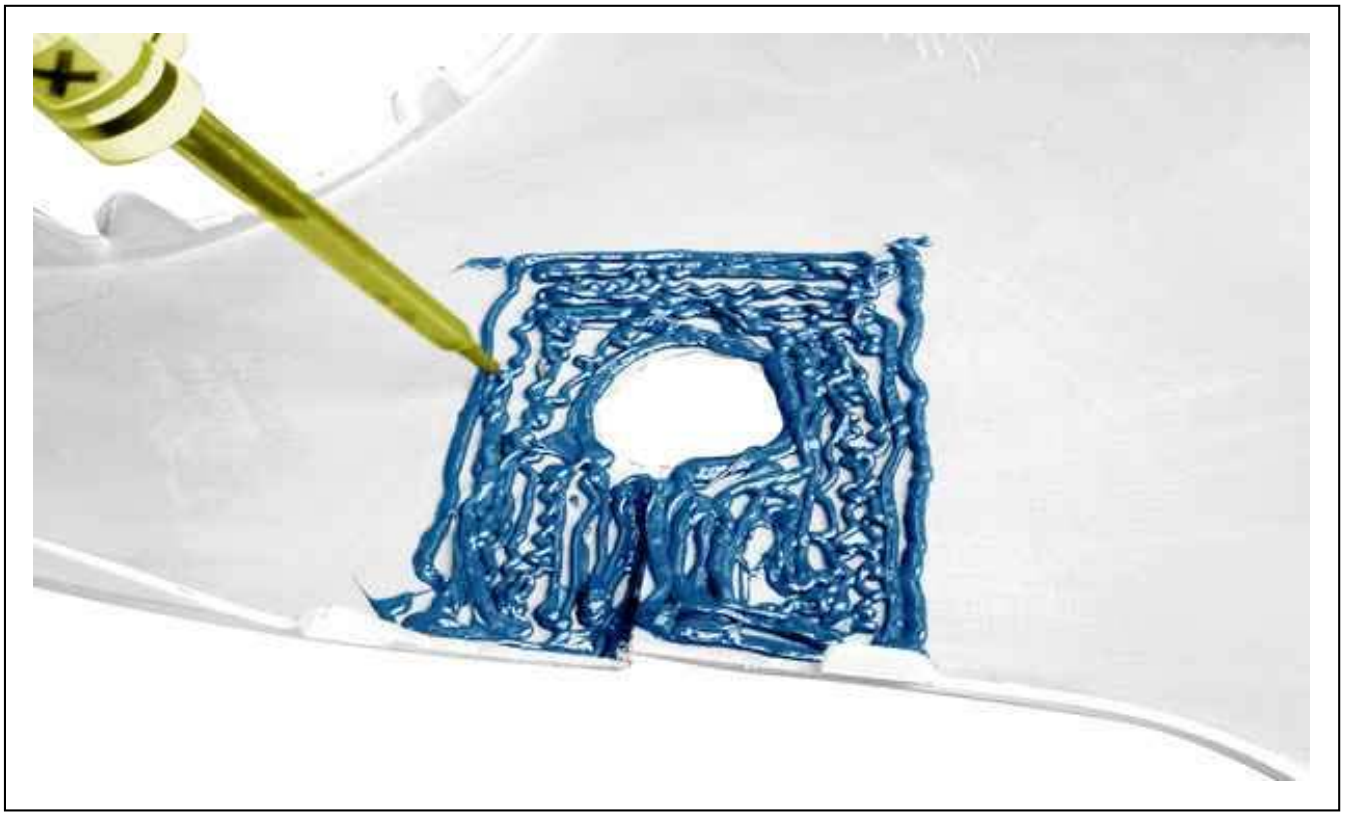

Figure : C5JM0MDD

Apply a layer of resin on the inside face of the repair, of the same dimension as the glass fibre stiffener strip.

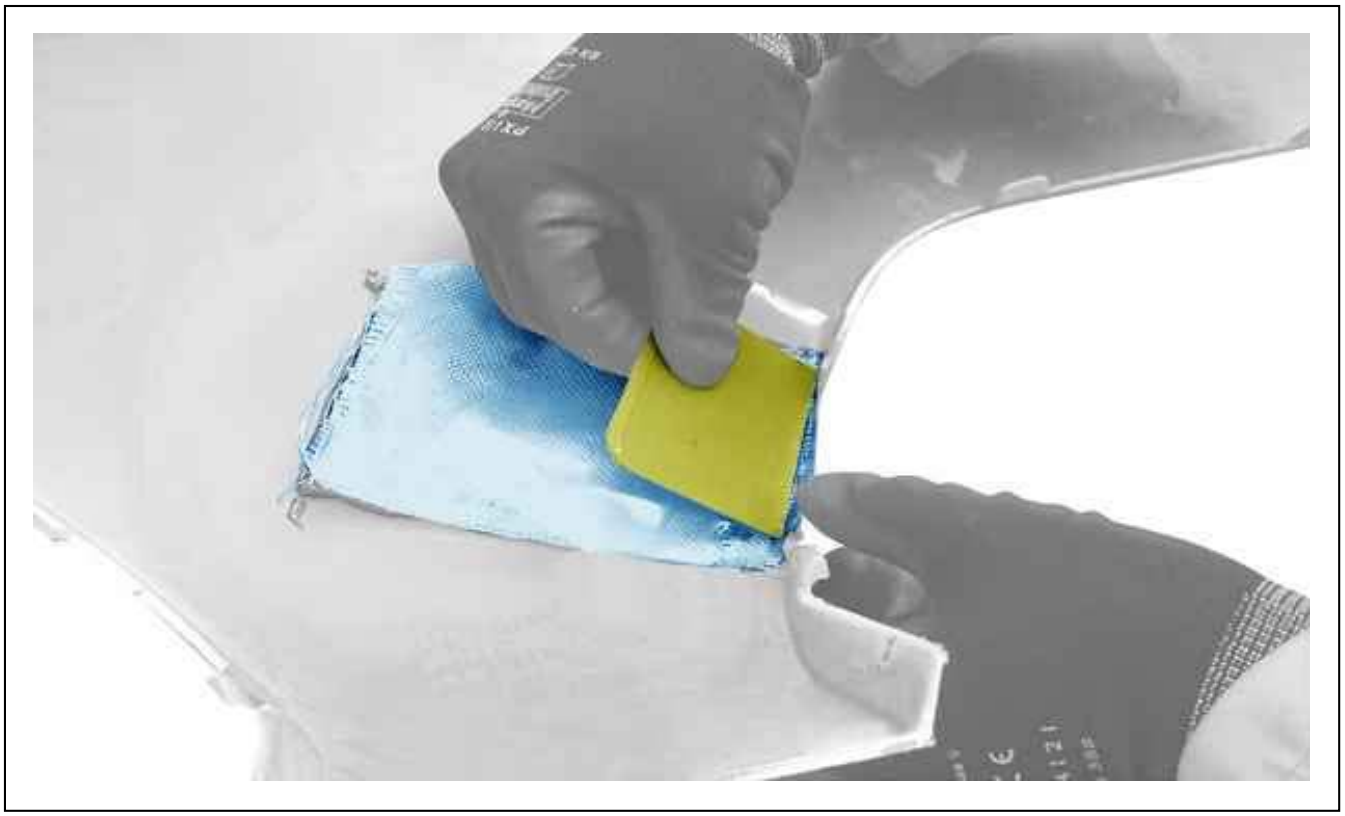

Figure : C5JM0MGD

Position the glass fibre stiffener strip ; Using a plastic spatula.

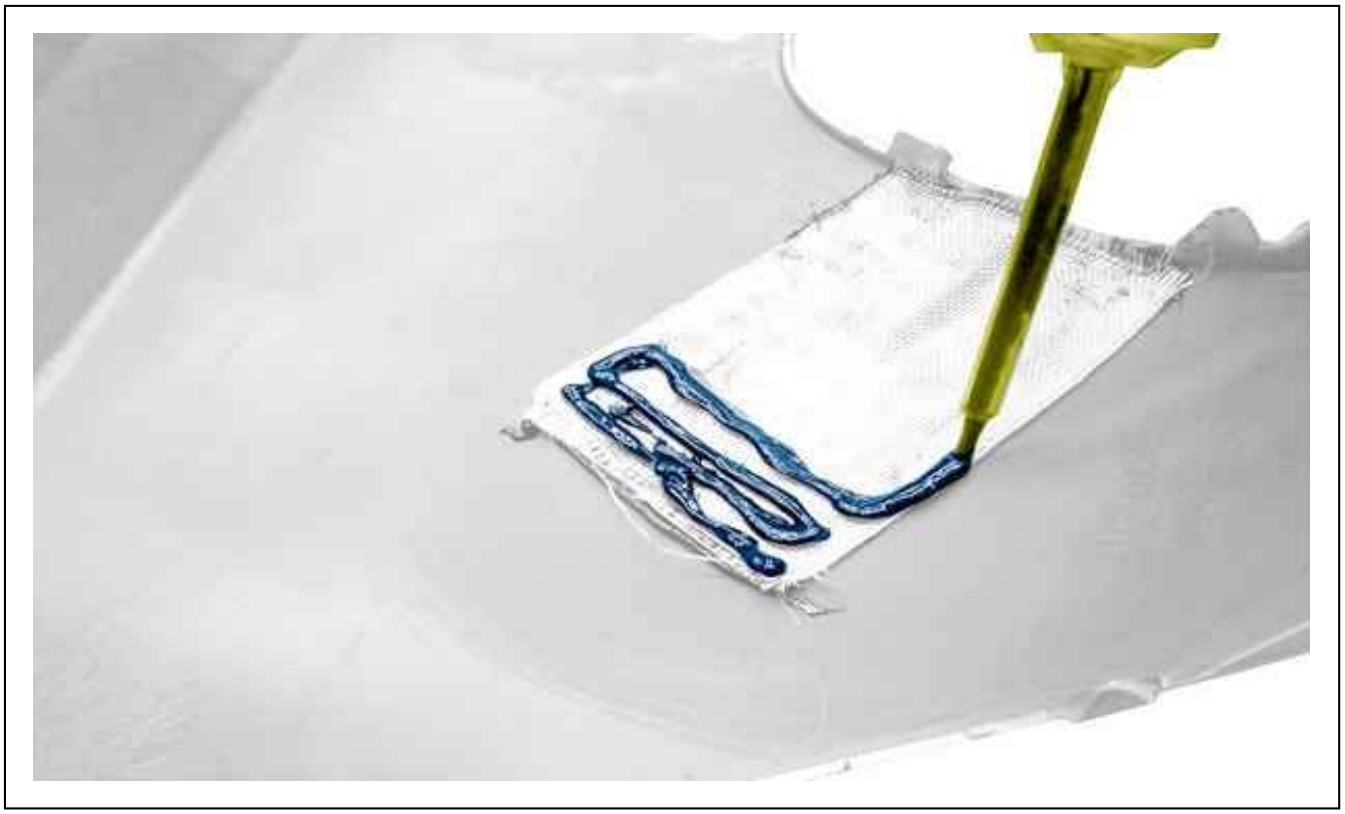

Figure : C5JM0MJD

Apply a layer of resin on the glass fibre stiffener strip ; Using an applicator gun .

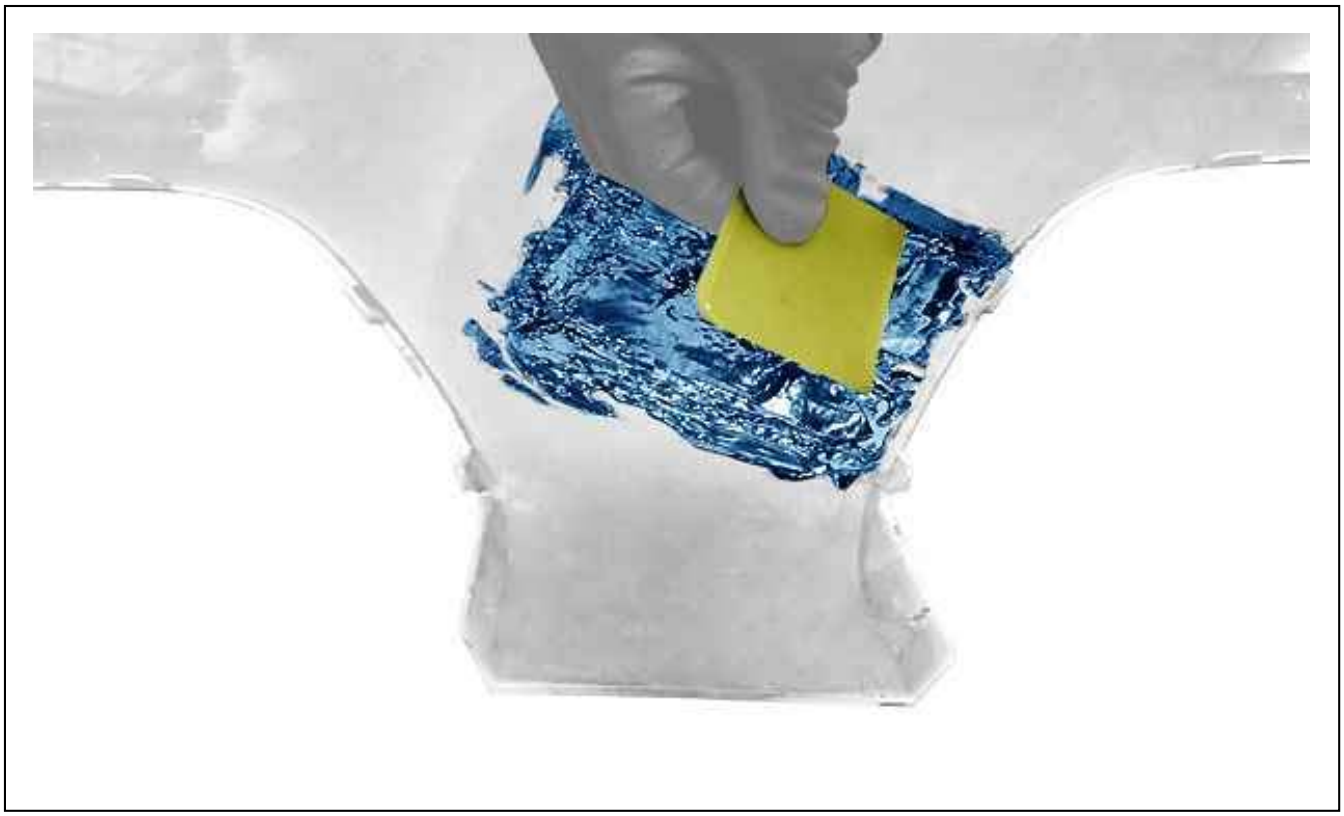

Figure : C5JM0MMD

Smooth the resin ; Using a plastic spatula.

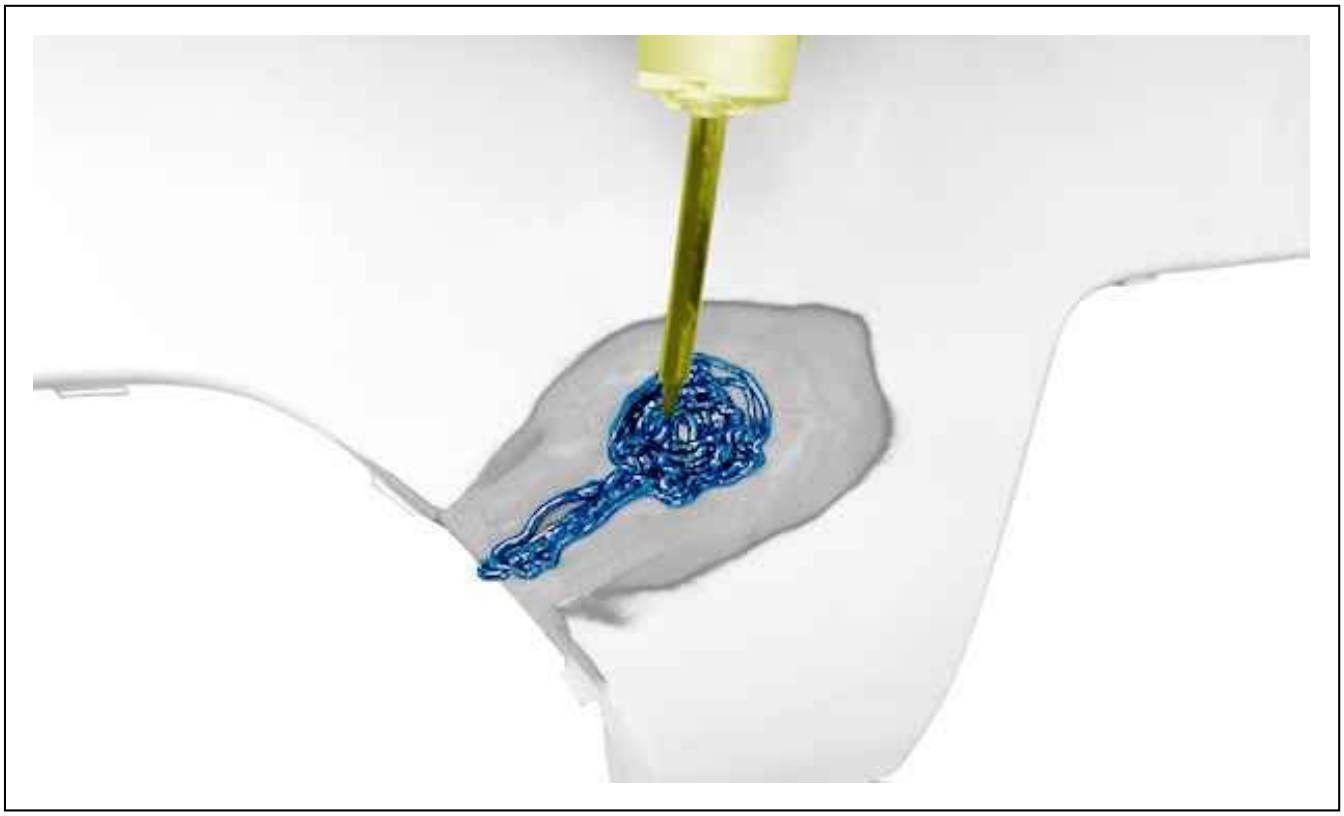

Figure : C5JM0MPD

Apply the resin on the exterior surface ; Using an applicator gun .

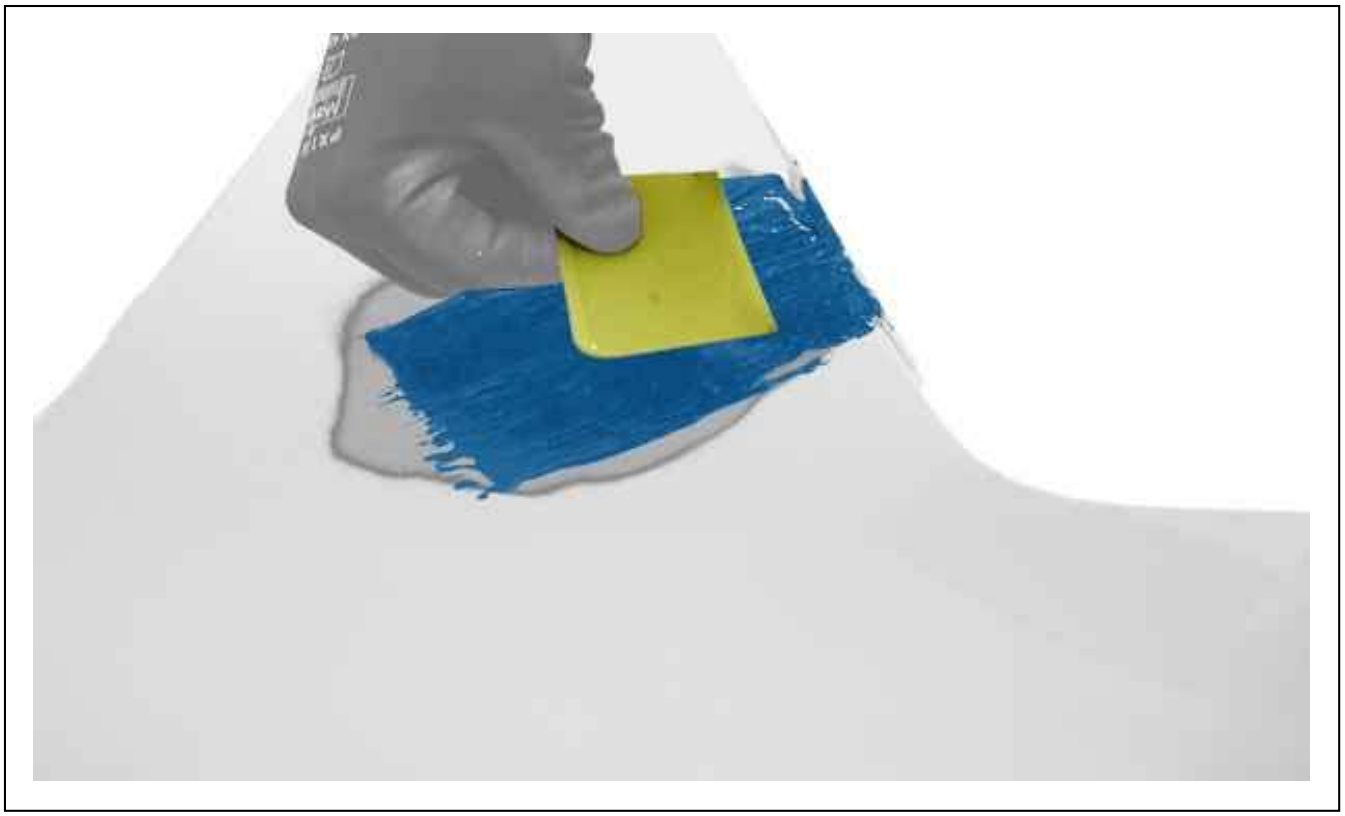

Figure : C5JM0MSD

N.B. : Leave a slight over-layer of resin.

Smooth the resin ; Using a plastic spatula.
Leave to polymerize; Using an infrared lamp (Depending on the type of resin used) (see operating instructions).

4. Finish

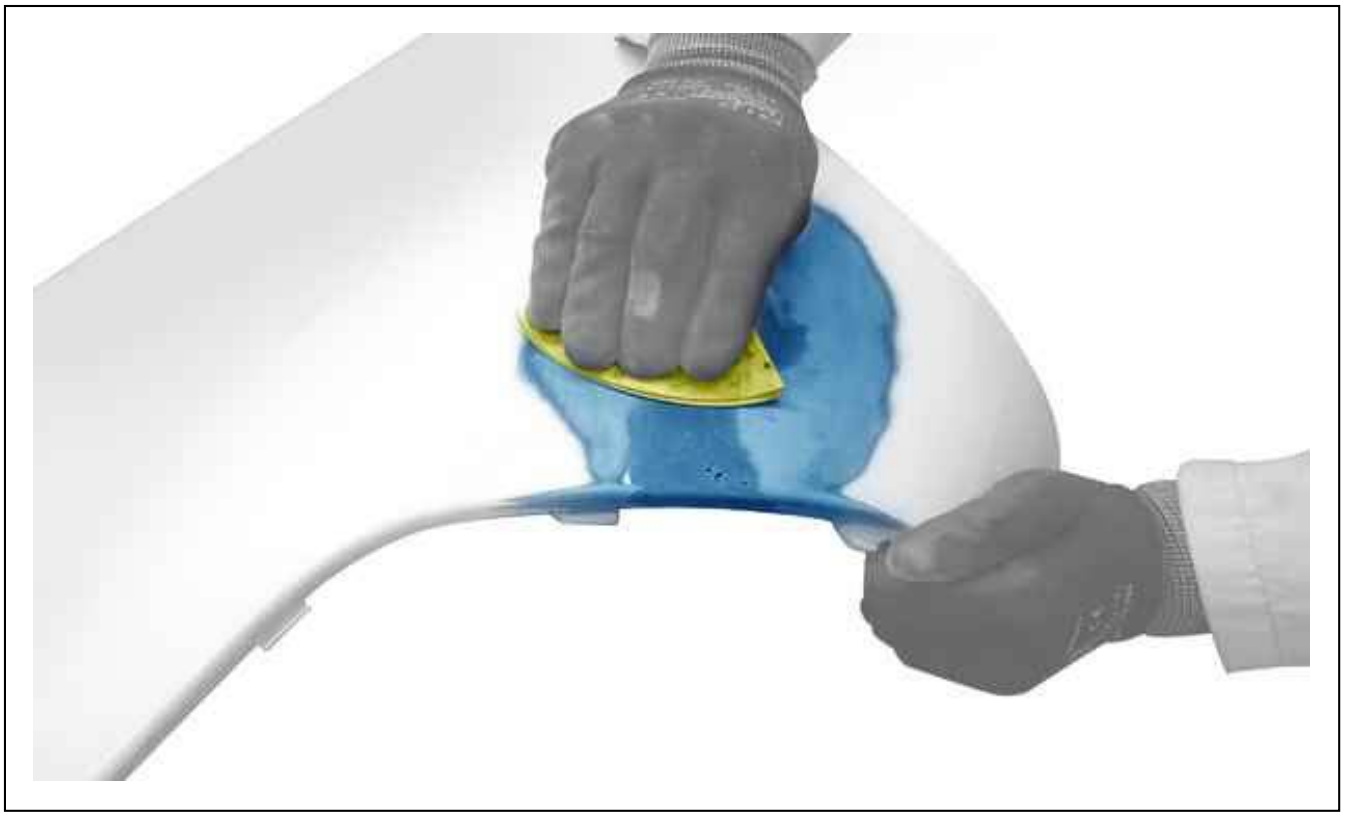

Figure : C5JM0MVD

N.B. : Remove any scratches or slight defects.

Smooth to remove excess resin, recreating the original form of the component.

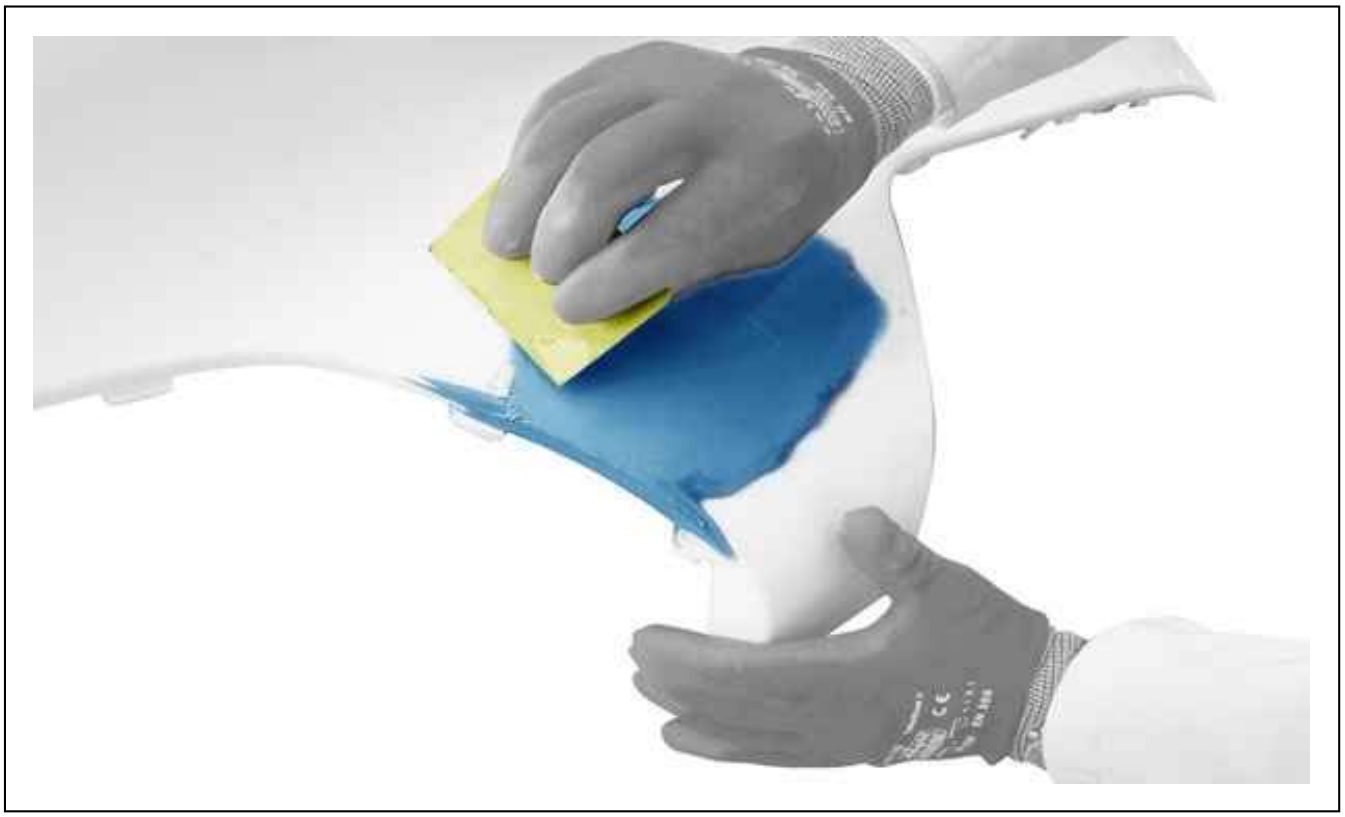

Figure : C5JM0MYD

Apply the finishing mastic over the entire repaired surface ; Using a plastic spatula.

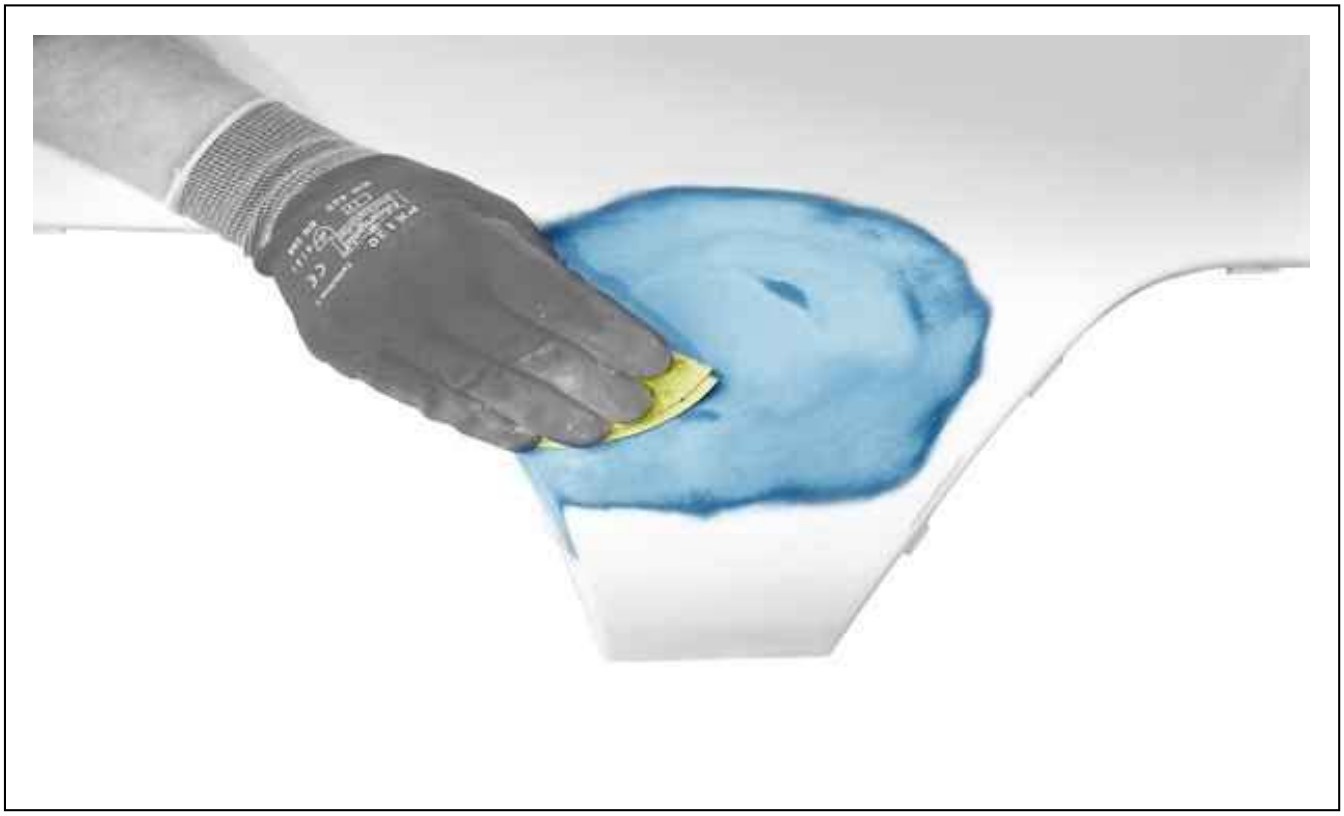

Figure : C5JM0N1D

Smooth the finishing mastic.
Paint the component.

STRIPPING-ASSEMBLING : FRONT BUMPER

1. Preliminary operation

Remove the front bumper (see the relevant operation).

2. Stripping

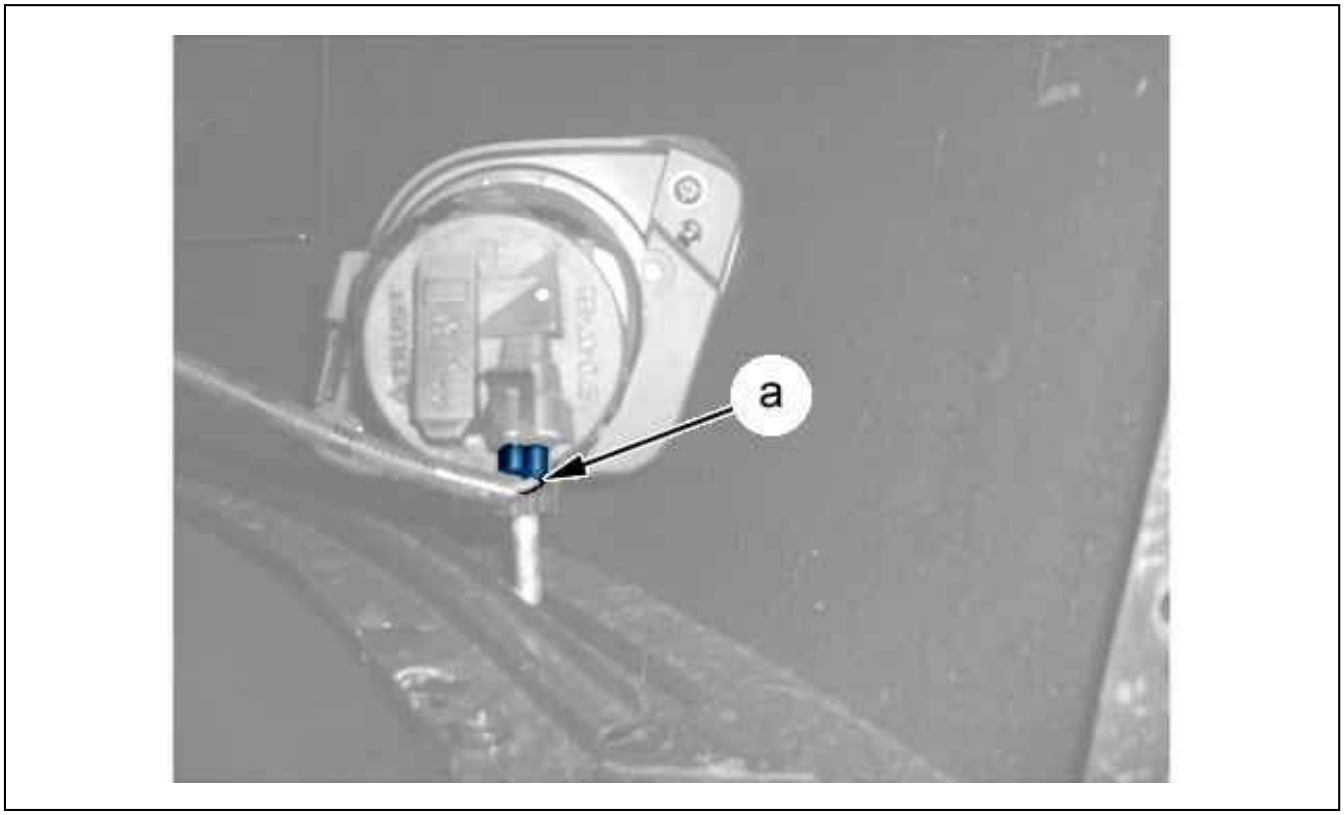

Figure : C5JP0D1D

Disconnect the connector (at "a") (right hand side).
Proceed in the same way for the other side.

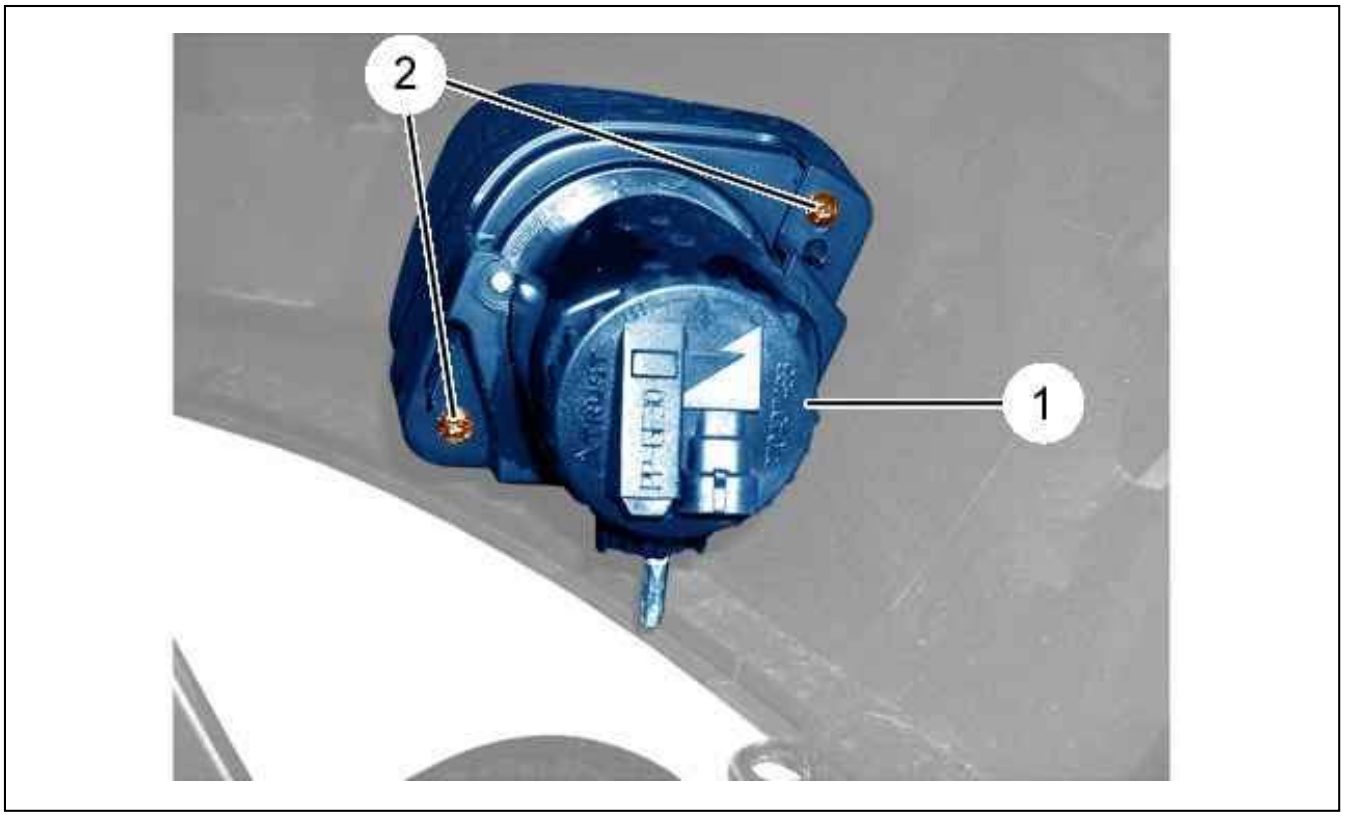

Figure : C5JP0D2D

Remove (right hand side) :

- The bolts (2)
- The front fog lamp (1)

Proceed in the same way for the other side.

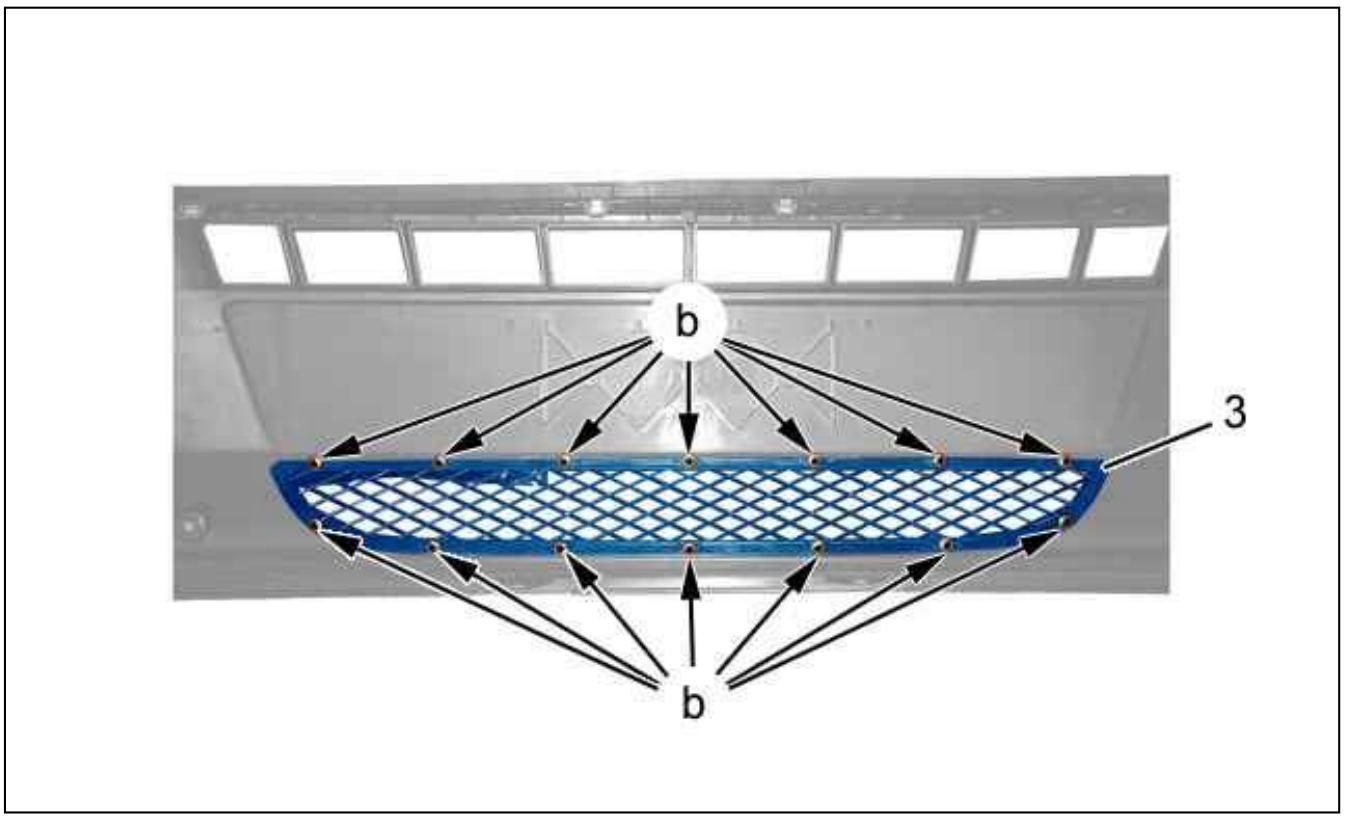

Figure : C5JP0D3D

Detach and remove the grid (3) (at "b").

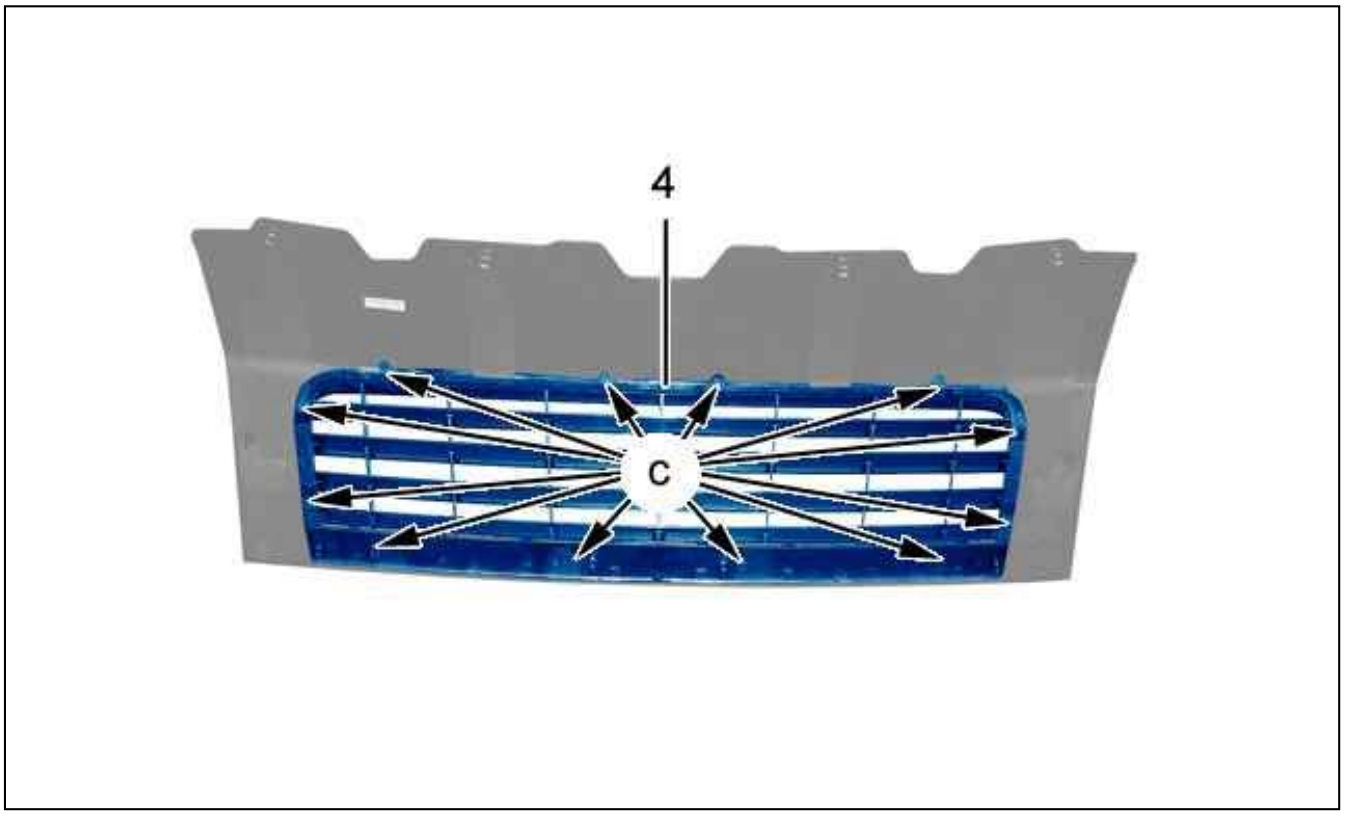

Figure : C5JP0D4D

Detach and remove the grille (4) (at "c").

3. Re-assembling

Carry out the re-trim operations in the reverse order to the stripping operations.
Check all the equipment works.

REMOVING - REFITTING : CAB PARTITION

1. Removing

1.1. Removing the cab partition

ESSENTIAL : Two people are required to perform the following operation.

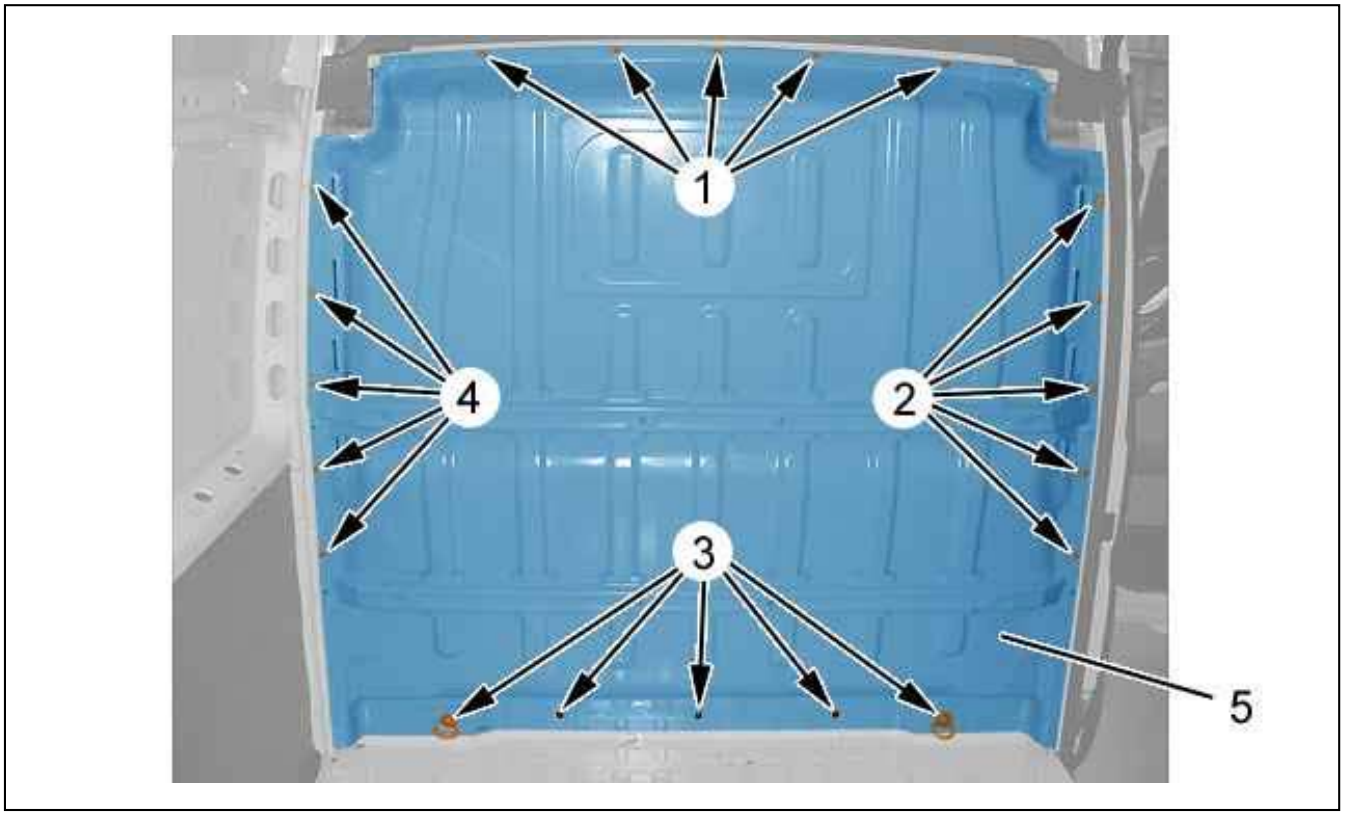

Figure : C4AP1N4D

Remove the bolts (1, 2, 3, 4).
Remove the cab partition (5).

1.2. Stripping

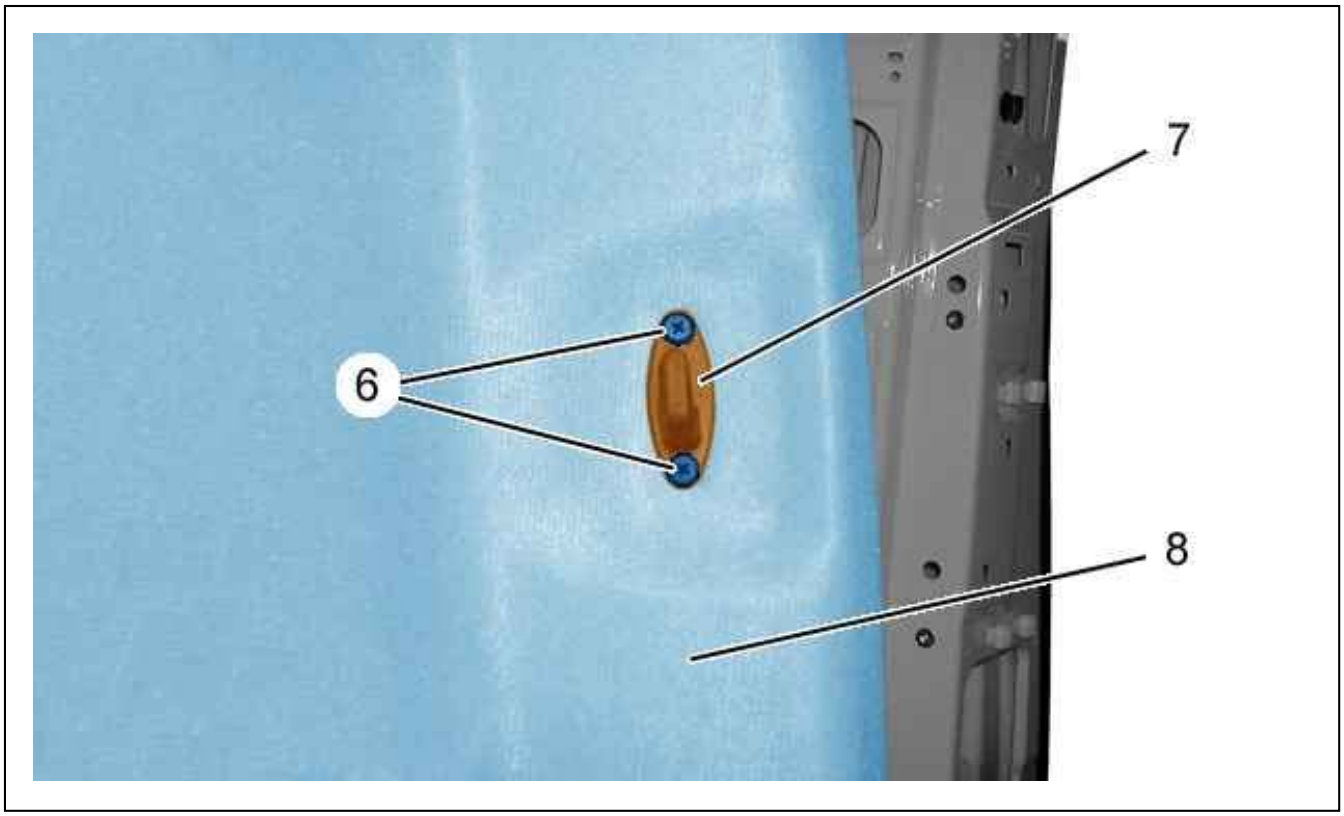

Figure : C5GP0MXD

Remove the coat hook (7) screws (6) (on each side).
Remove the partition trim (8).

2. Refitting

Proceed in the reverse order to removal.

Reference	Designation	Tightening torque
(1)	bolts	0,6 ± 0,2 daNm
(2)		
(3)		2 ± 0,2 daNm
(4)		0,6 ± 0,2 daNm
(6)		0,2 ± 0,02 daNm

REMOVING - REFITTING : LOAD SAFETY BAR

ESSENTIAL : Observe the safety and cleanliness recommendations .

1. Removing

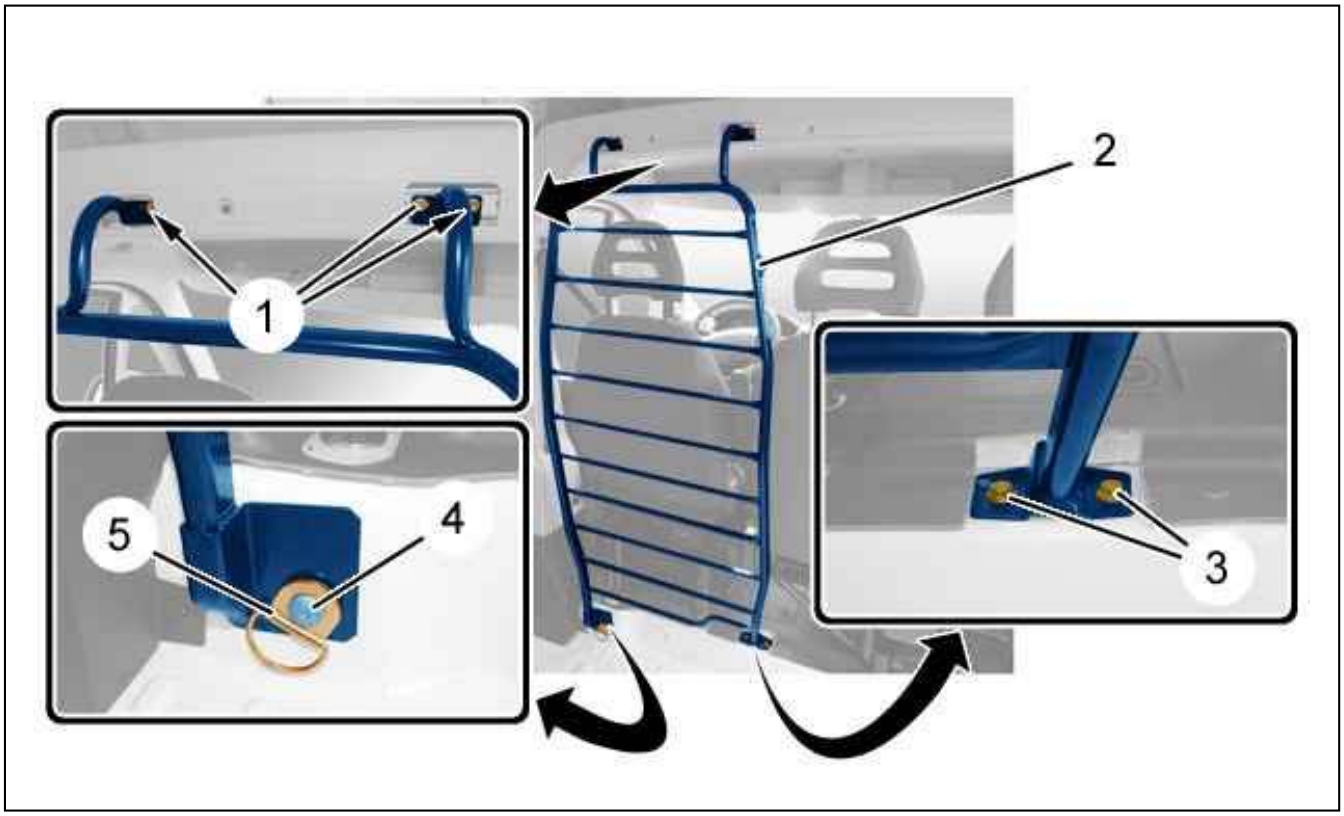

Figure : C4AG1UAD

Remove :

- The bolts (1), (3), (4)
- The fixing ring (5)
- The load retainer (2)

2. Refitting

Proceed in the reverse order to removal.

REPLACEMENT : PART TAIL PANEL

ESSENTIAL : All of the stripped surfaces must be protected by means of the approved electrolytic rezincing process (see the relevant operation).

ESSENTIAL : Observe the elementary rules of hygiene and safety (wear a face mask to protect against fumes and vapour - work in a well ventilated space).

1. Additional operations

Disconnect the battery.
Replacement :

- Rear bumper
- Rear bumper crossmember

Removing - Refitting :

- Rear doors
- Rear lamp cluster
- Rear door striking plate
- Rear door frame seal

Release the wiring harnesses.

2. Identification of the replacement parts



Figure : C4BP1RKD

Figure 1.
Tail panel .

3. Replacement part preparation

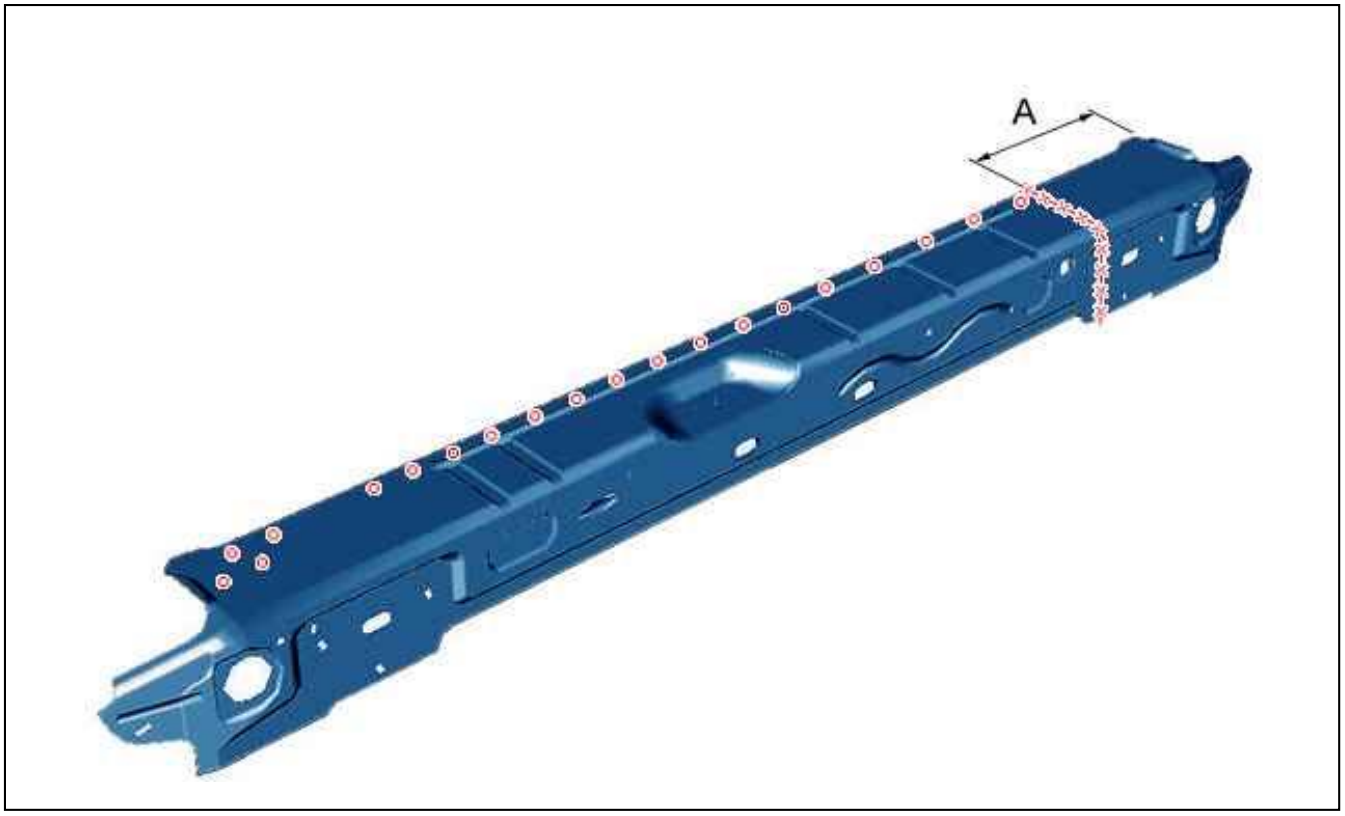

Figure : C4BP1RLD

Figure 2.
Tail panel .
Mark then cut (final cutting).
Mark then drill to Ø 10 mm for later plug welding (20 holes).
Prepare the mating edges .

4. Cutting out

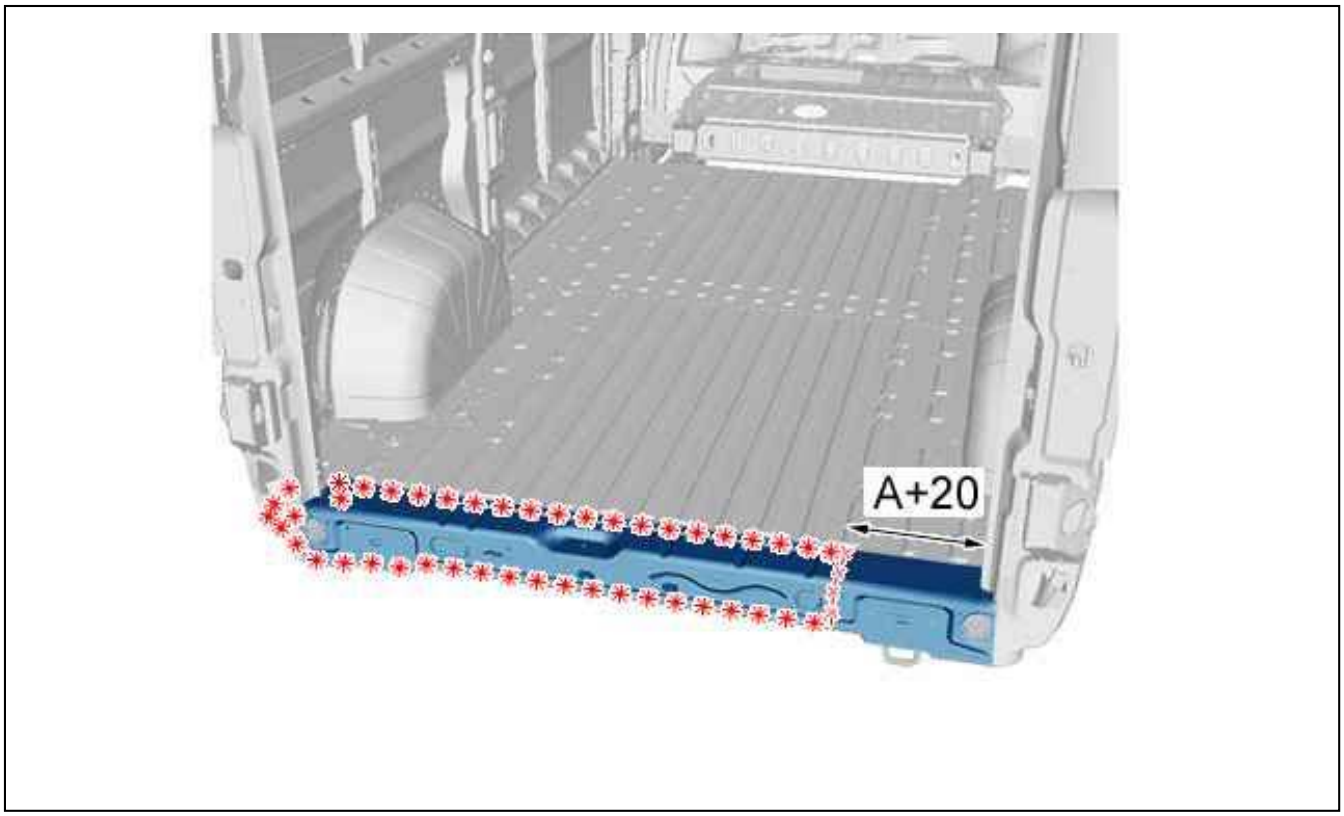

Figure : C4BP1RMD

Figure 3.
Cut out the spot welds .
Mark then cut (preliminary cut).
Remove the part tail panel.

5. Bodywork cleaning and preparation

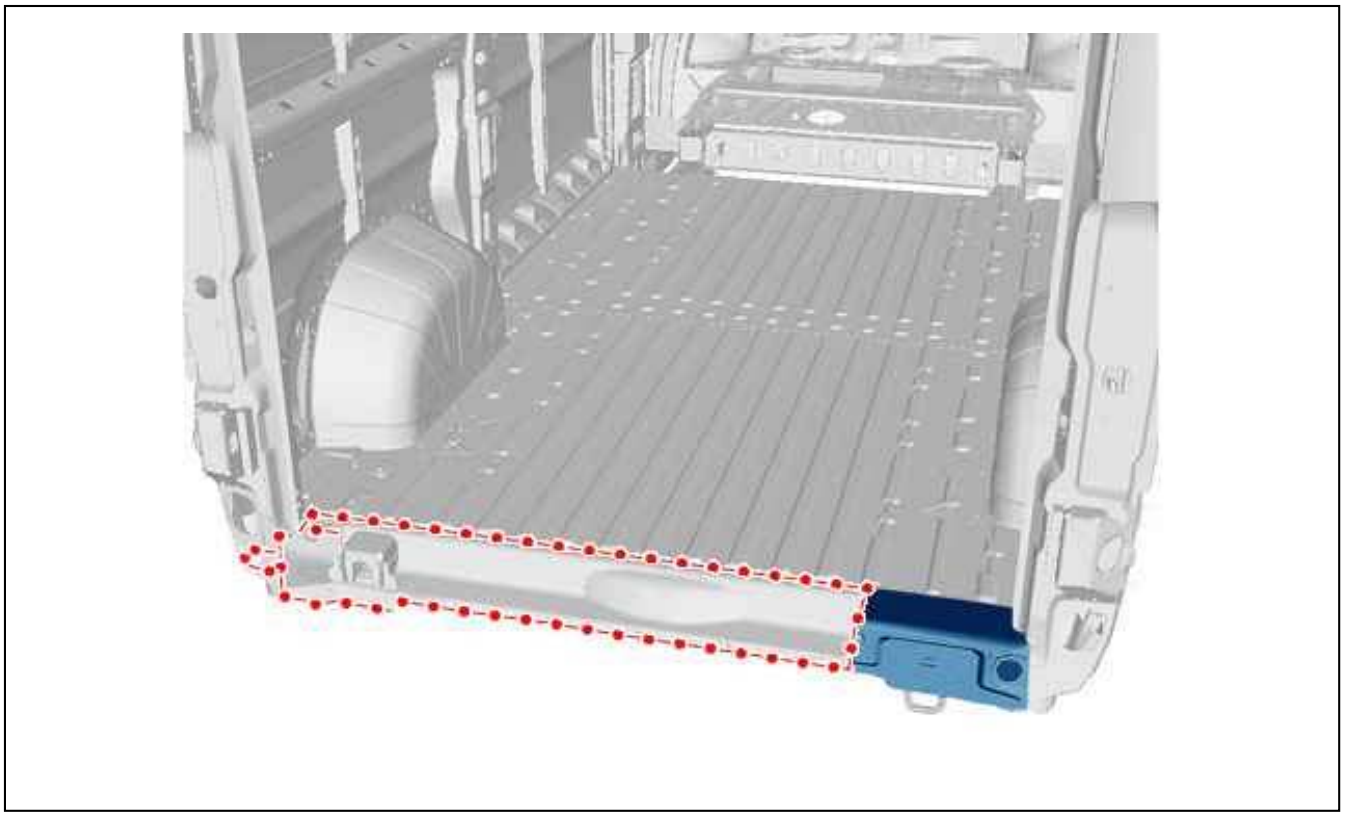

Figure : C4BP1RND

Figure 4.
Prepare the mating edges .
Align the mating edges and protect them with a weldable primer.

6. Adjustment

Present the component for adjustment.
Check the fits and clearances (see the relevant operation).

7. Welding

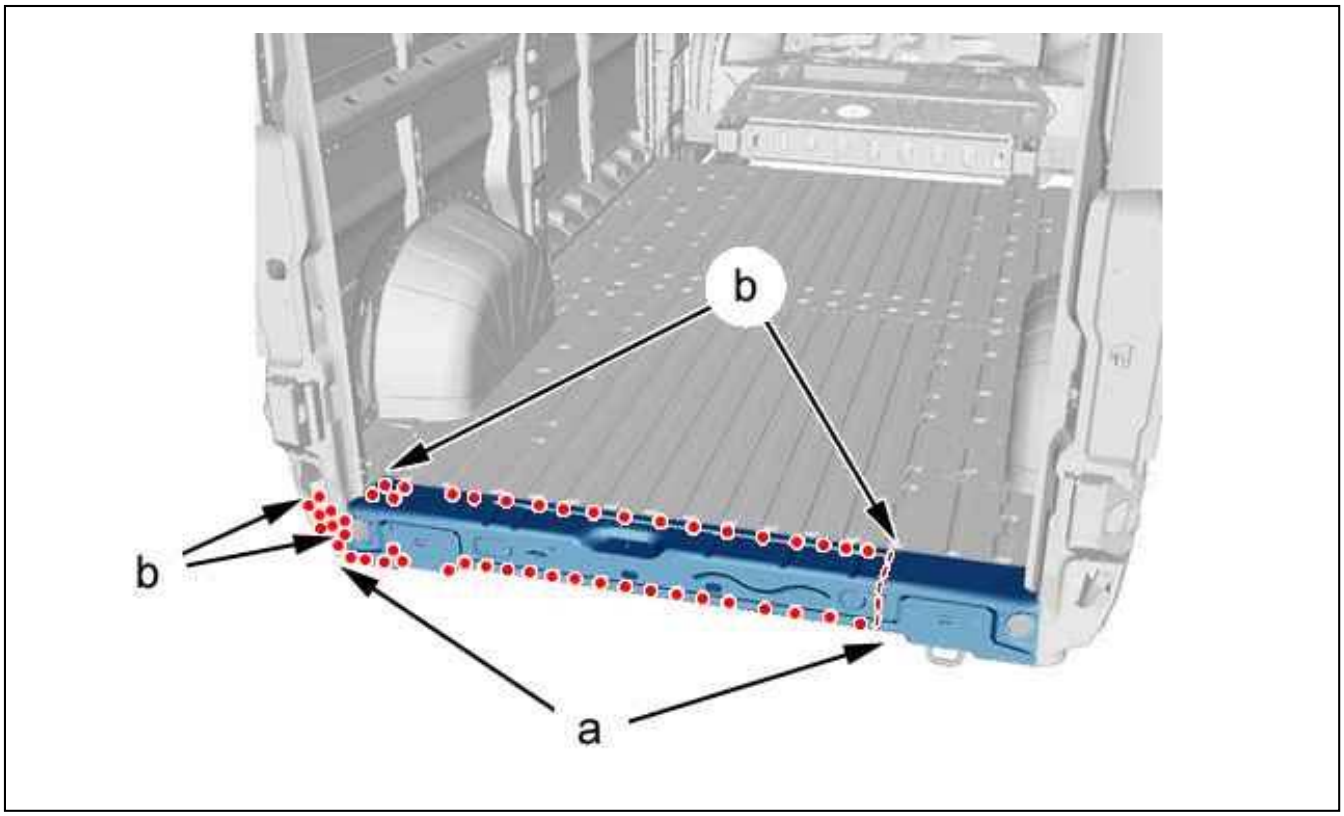

Figure : C4BP1RPD

Figure 5.
Weld using successive beads (MIG or MAG).
Grind the welds.
Weld with MIG or MAG spot welds (at "b").
Grind the spot welds.
Weld with electric spot welds (at "a").

8. Sealing

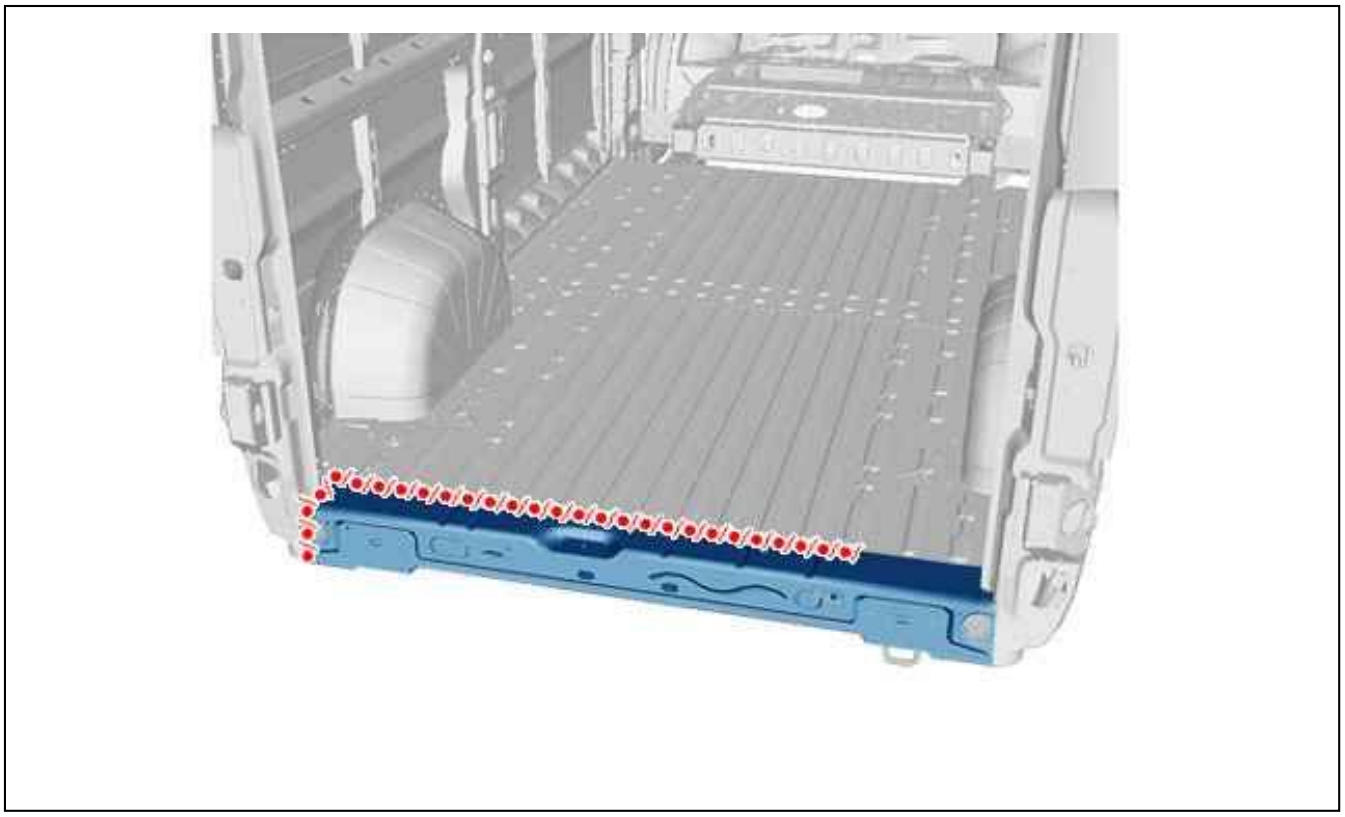

Figure : C4BP1RQD

Figure 6.
Apply a phosphate-print layer on the zone laid bare.
Apply a sealing mastic of type " A4" (see the relevant operation).

9. Protection

Paint then spray into the hollow sections, product index C5, in the repair zone (see the relevant operation).

10. Reinitialisation

Reconnect the battery.

ESSENTIAL : Perform the operations to be carried out following reconnection of the battery.

REPLACEMENT : PART REAR FLOOR

ESSENTIAL : All of the stripped surfaces must be protected by means of the approved electrolytic rezincing process (see the relevant operation).

ESSENTIAL : Observe the elementary rules of hygiene and safety (wear a face mask to protect against fumes and vapour - work in a well ventilated space).

1. Additional operations

Disconnect the battery.
Replacement :

- Rear wheelarch - Wheel arch extension (see the relevant operation)
- Part tail panel (see the relevant operation)

Release the wiring harnesses.

2. Identification of the replacement parts

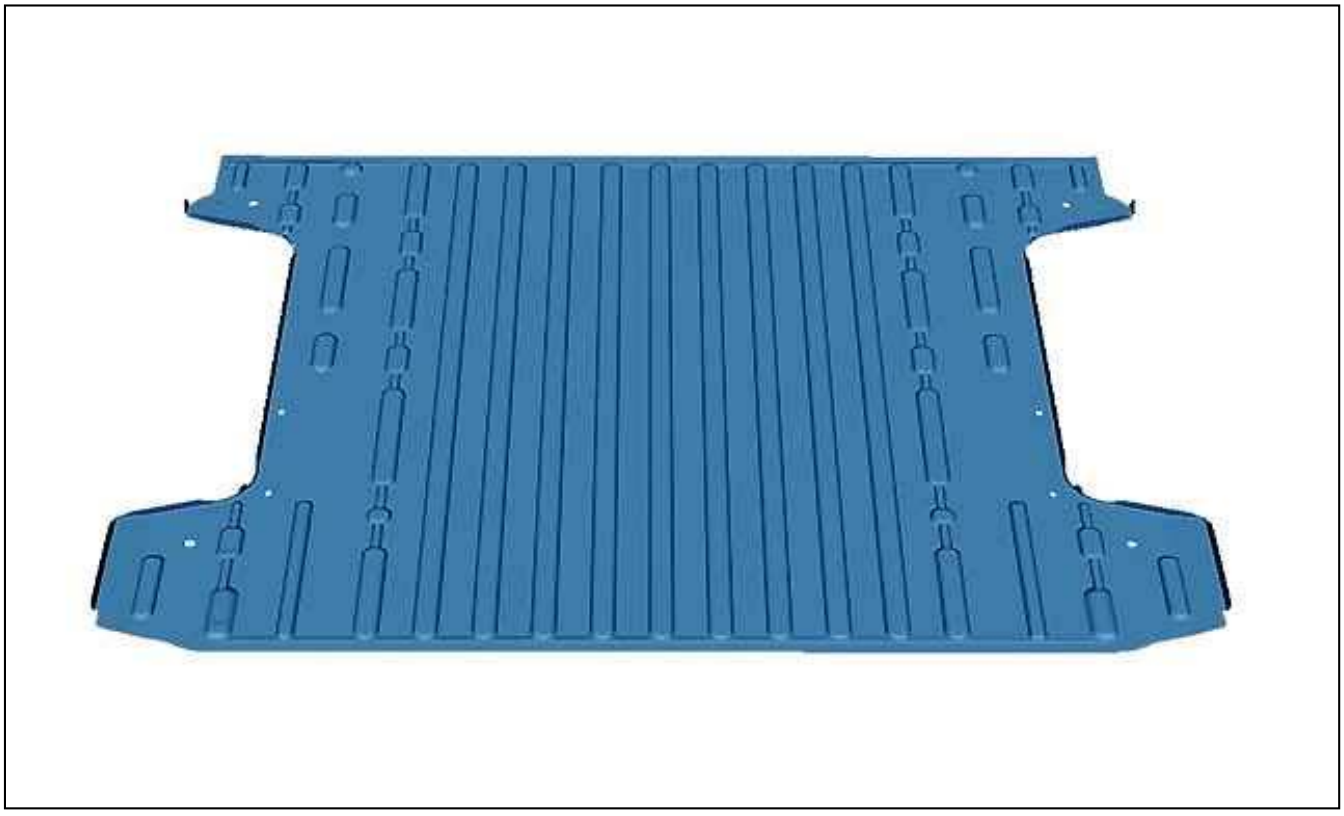

Figure : C4BP1Q6D

Figure 1.
Rear floor panel .

3. Replacement part preparation

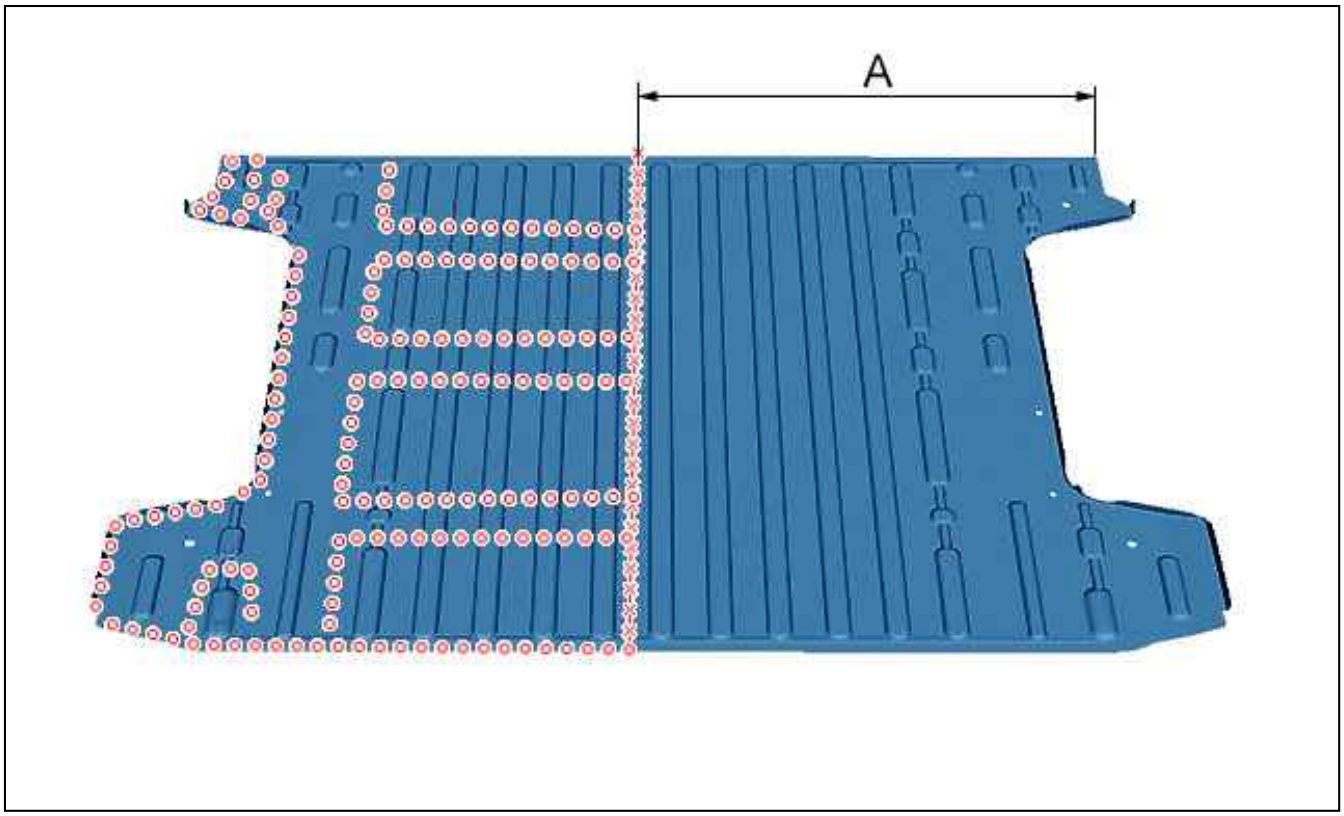

Figure : C4BP1Q7D

Figure 2.
Rear floor panel .
Mark then cut (final cutting).
Mark then drill to Ø 6 mm for later plug welding (127 holes).
Prepare the mating edges .

4. Cutting out

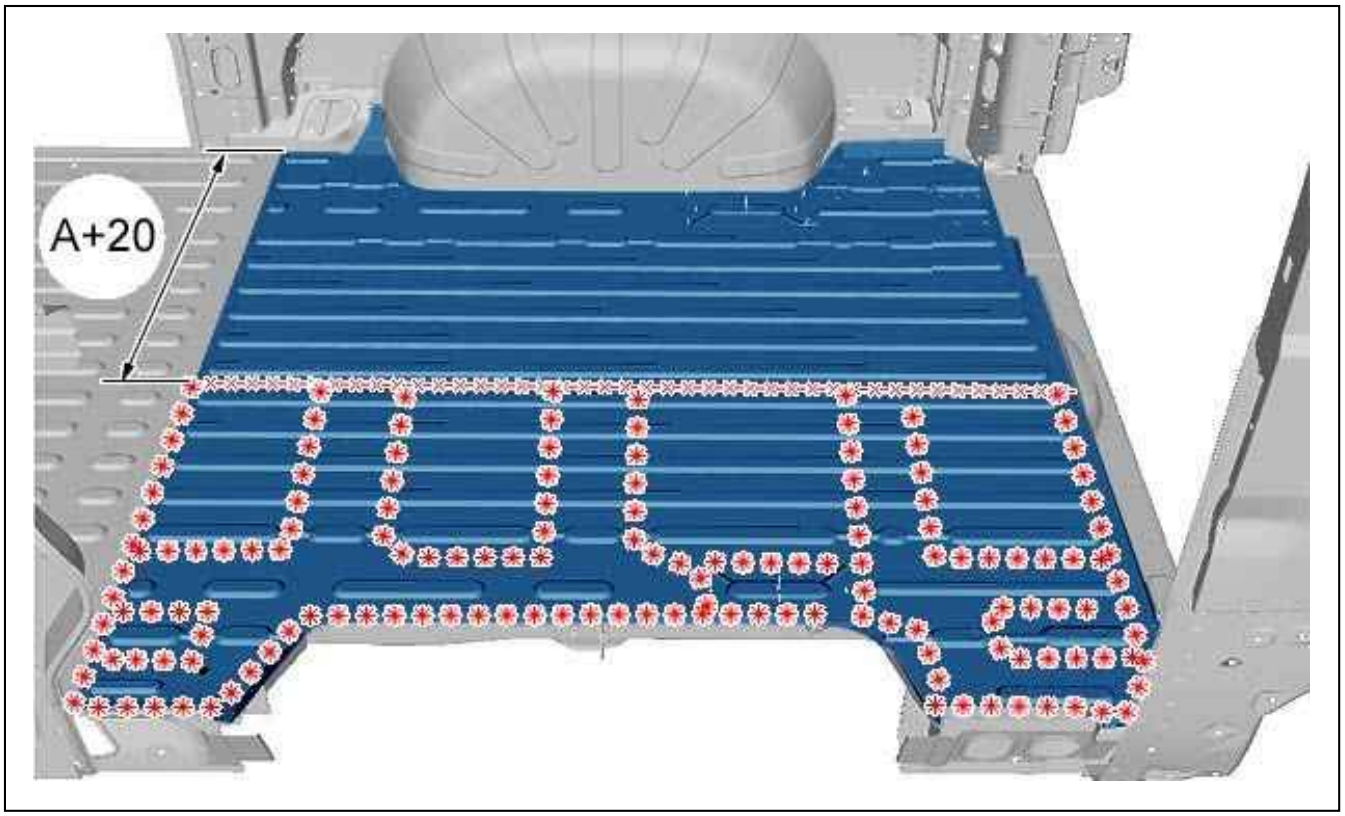

Figure : C4BP1Q8D

Figure 3.
Mark then cut (preliminary cut).
Cut out the spot welds .
Remove the partial rear floor.

5. Bodywork cleaning and preparation

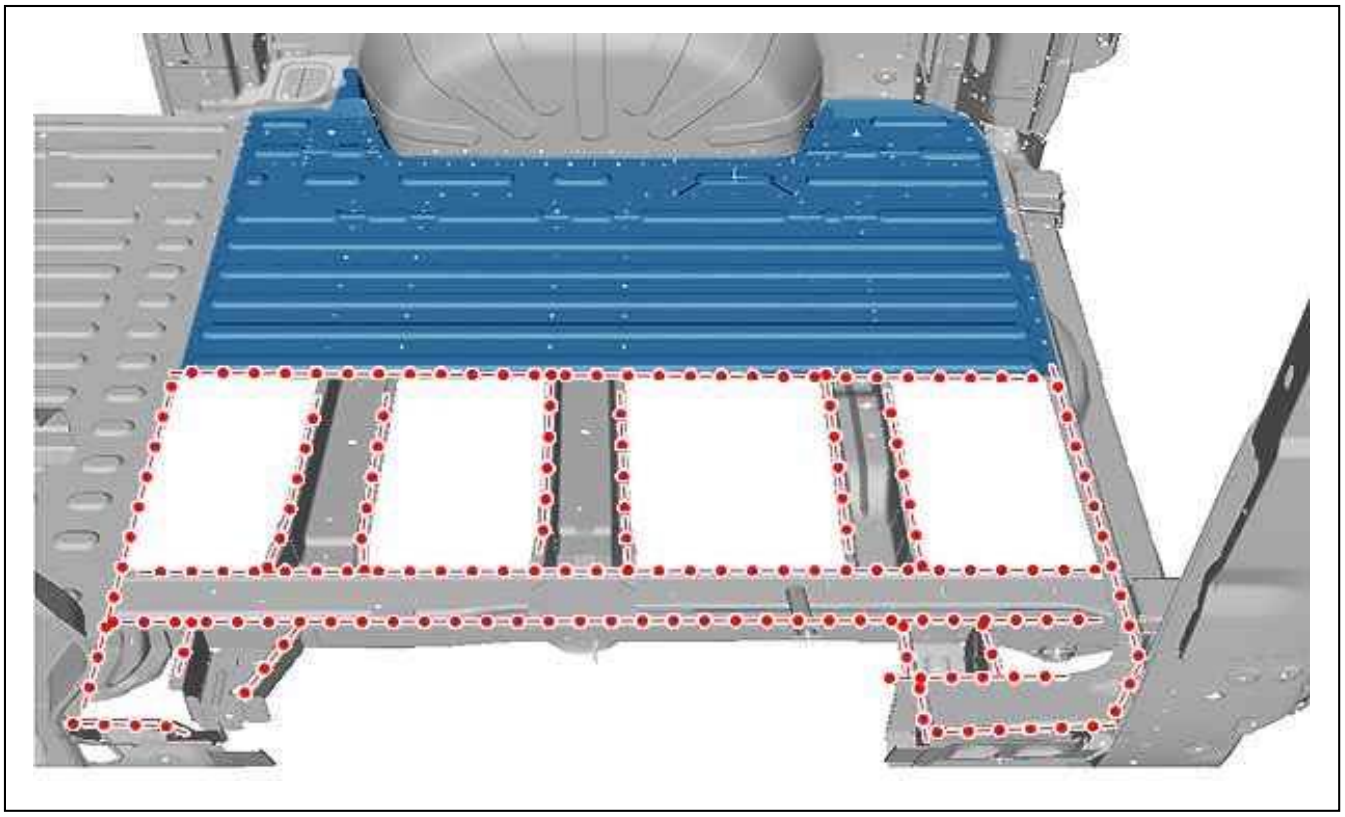

Figure : C4BP1Q9D

Figure 4.
Prepare the mating edges .
Align the mating edges and protect them with a weldable primer.

6. Adjustment

Present the component for adjustment.
Check the fits and clearances (see the relevant operation).

7. Welding

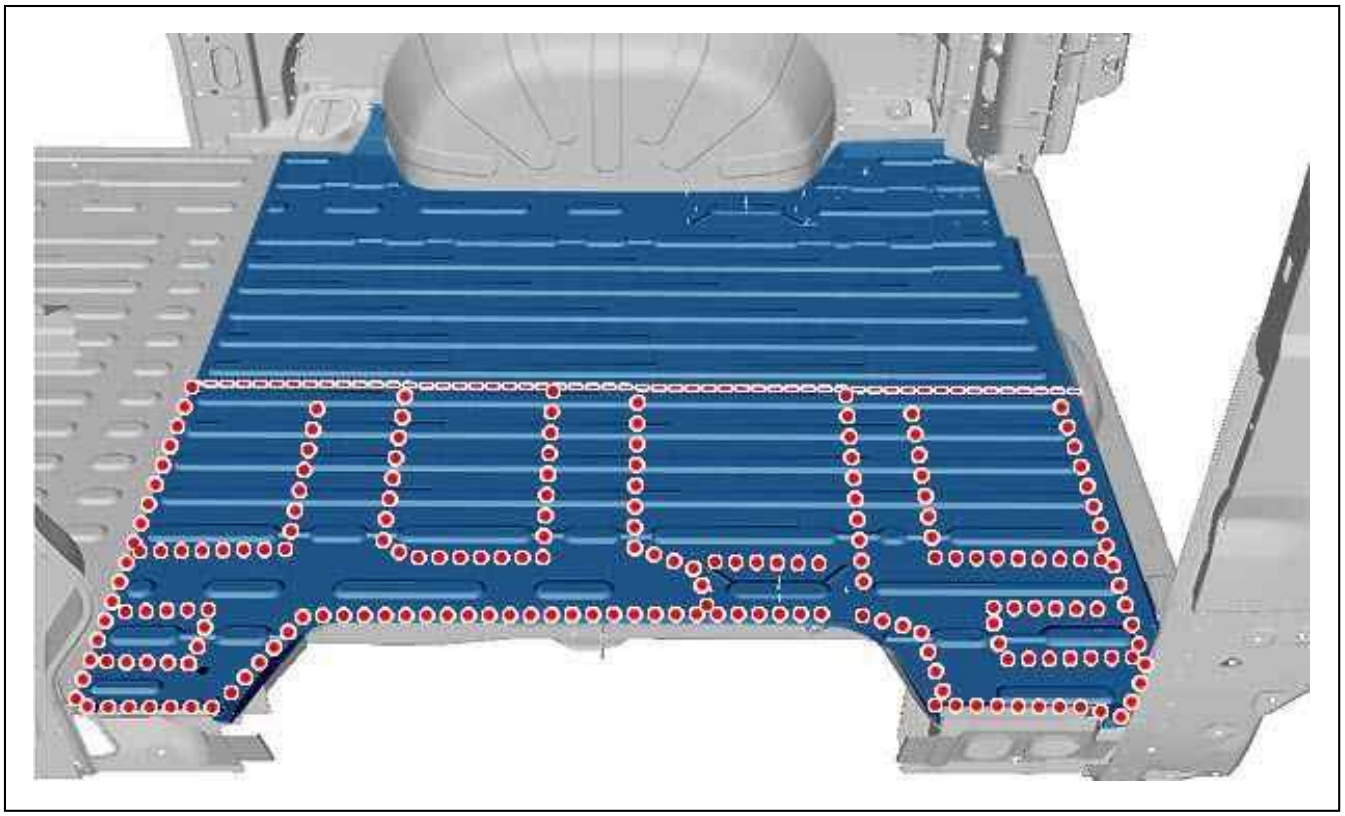

Figure : C4BP1QAD

Figure 5.
Weld using successive beads (MIG or MAG).
Grind the welds.
Weld with plug welds (MIG or MAG).
Grind the spot welds.

8. Sealing

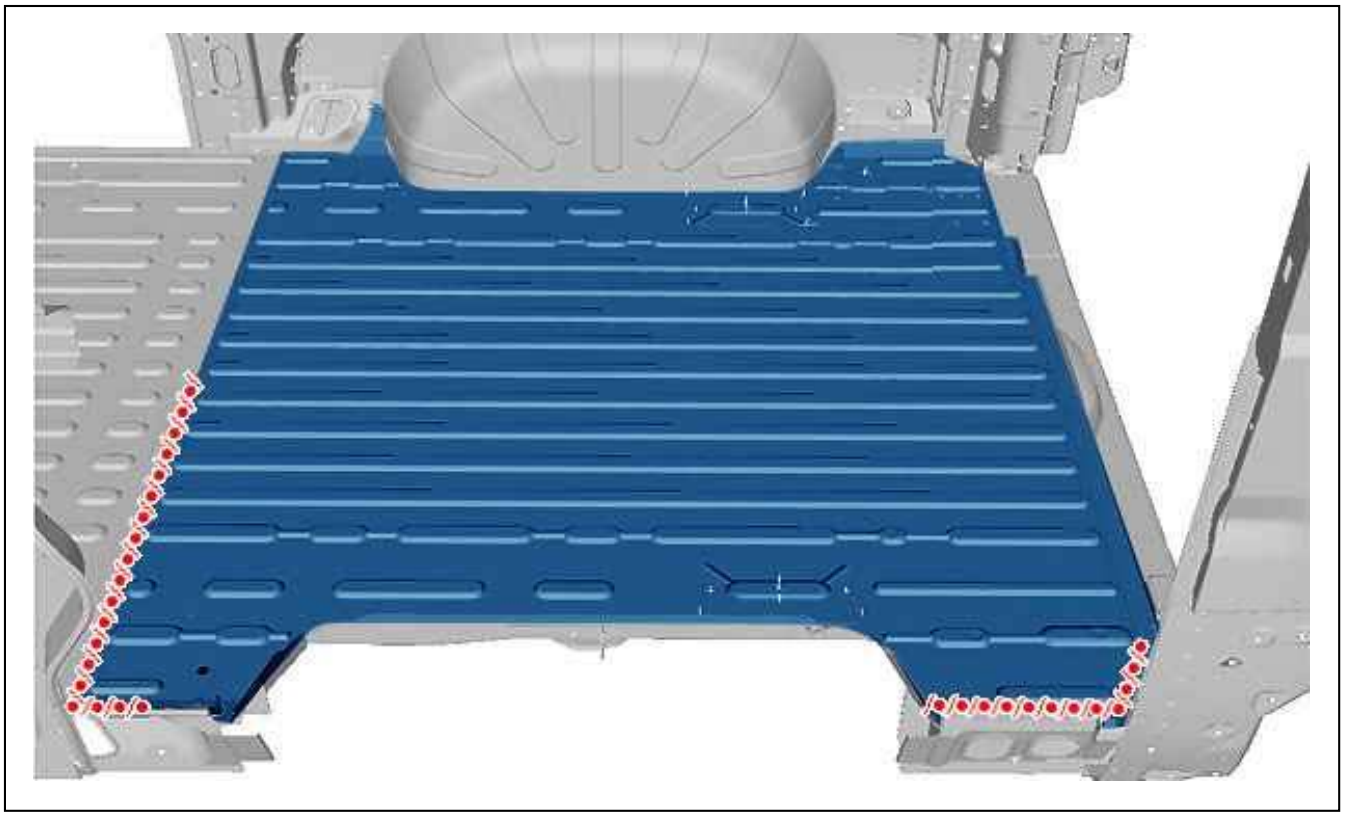

Figure : C4BP1QBD

Figure 6.
Apply a phosphate-print layer on the zone laid bare.
Apply a sealing mastic of type " A1" (see the relevant operation).

9. Protection

Paint then spray into the hollow sections, product index C5, in the repair zone (see the relevant operation).
Apply an anti-chip layer (see the relevant operation).

10. Reinitialisation

Reconnect the battery.

ESSENTIAL : Perform the operations to be carried out following reconnection of the battery.

REPLACEMENT : REAR FLOOR PANEL

ESSENTIAL : All of the stripped surfaces must be protected by means of the approved electrolytic rezincing process (see the relevant operation).

ESSENTIAL : Observe the elementary rules of hygiene and safety (wear a face mask to protect against fumes and vapour - work in a well ventilated space).

1. Additional operations

Disconnect the battery.
Replacement :

- Rear wheelarch - Wheel arch extension (see the relevant operation)
- Part tail panel (see the relevant operation)

Release the wiring harnesses.

2. Identification of the replacement parts

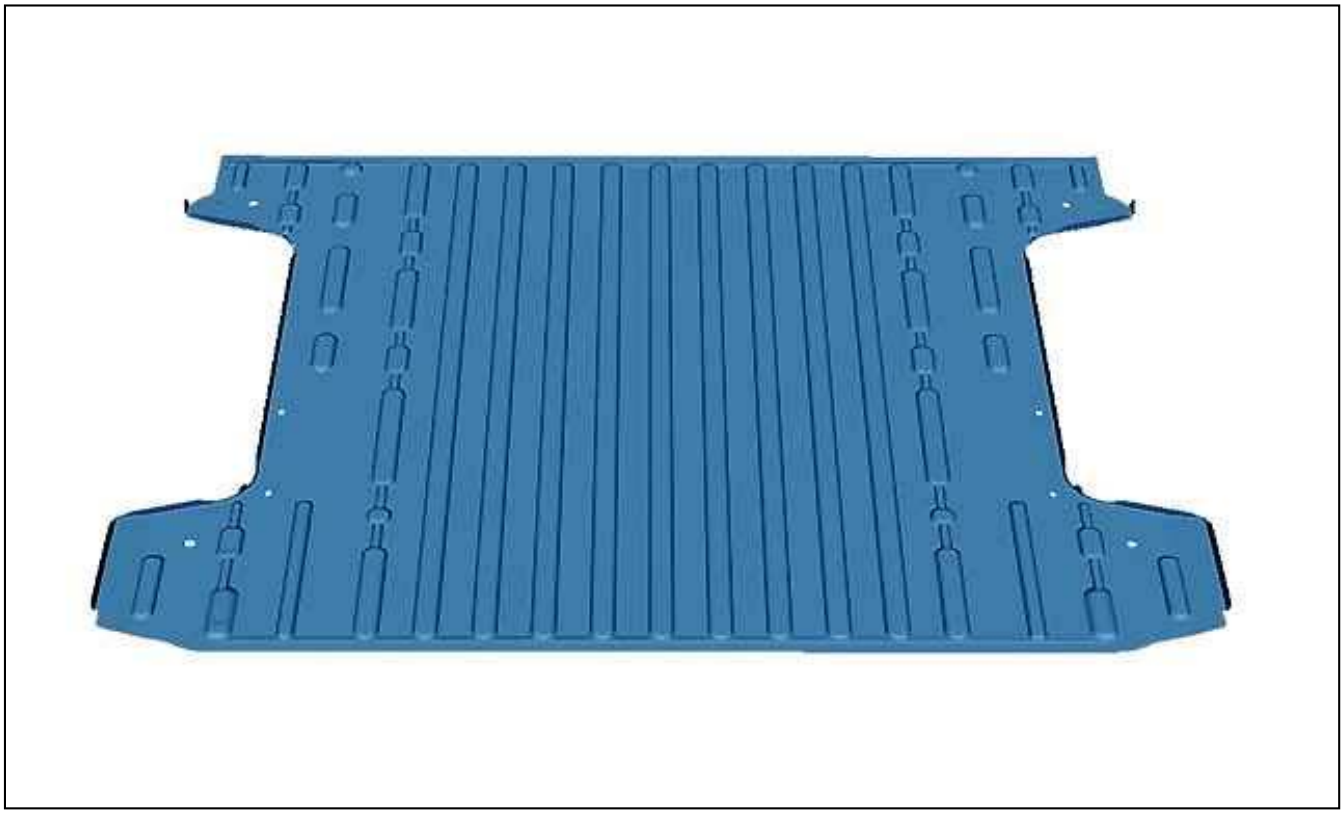

Figure : C4BP1Q6D

Figure 1.
Rear floor panel .

3. Replacement part preparation

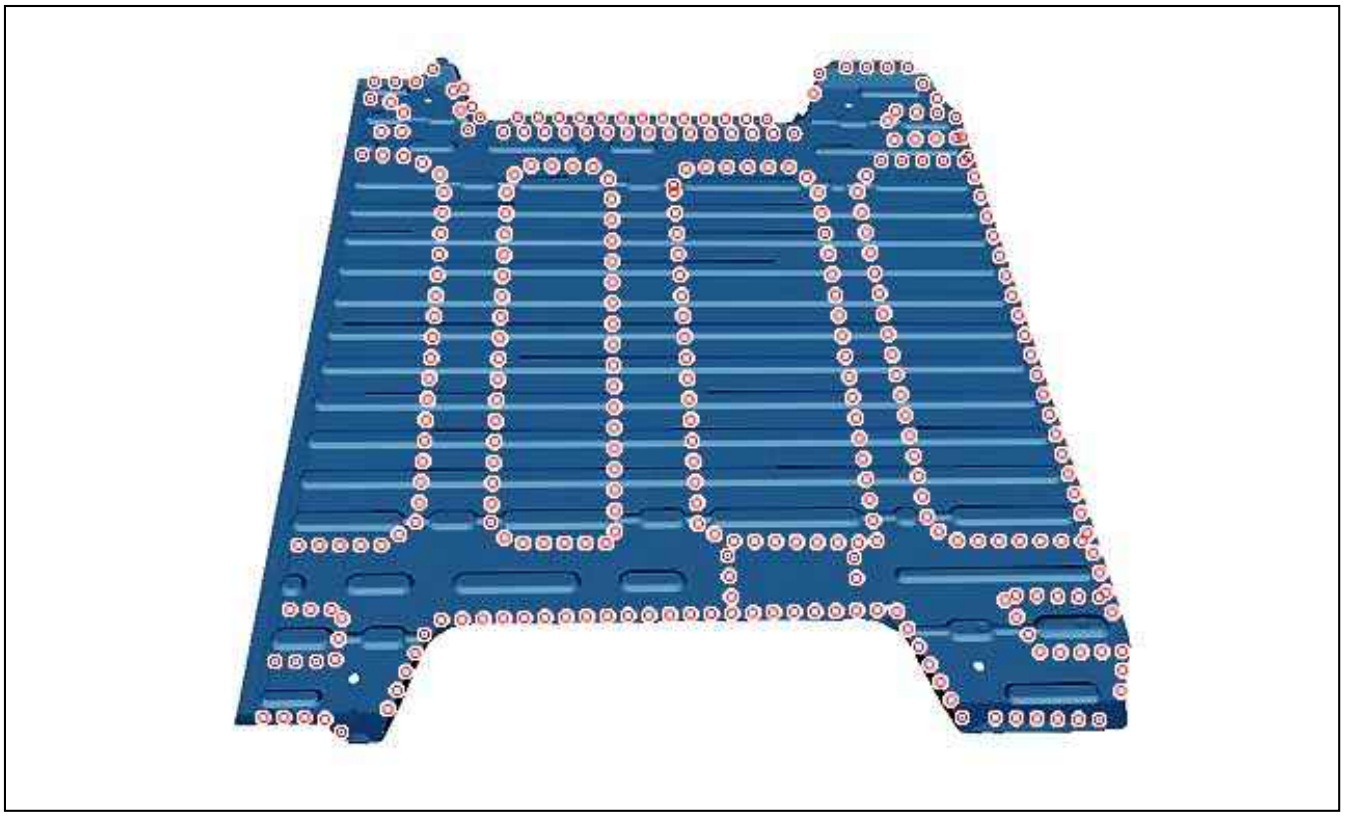

Figure : C4BP1QCD

Figure 2.
Rear floor panel .
Mark then drill to Ø 6 mm for later plug welding (250 holes).
Prepare the mating edges .

4. Cutting out

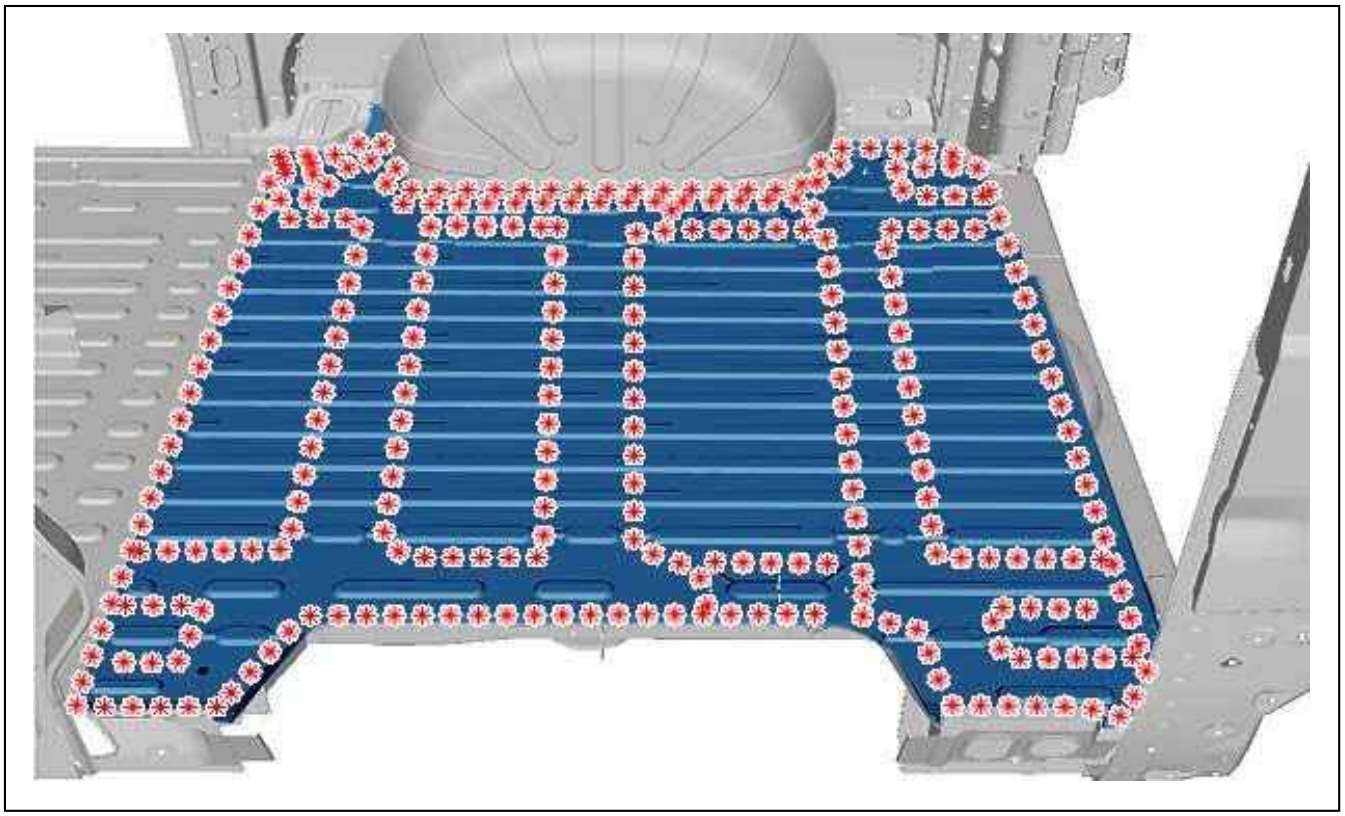

Figure : C4BP1QDD

Figure 3.
Cut out the spot welds .
Remove the rear floor.

5. Bodywork cleaning and preparation

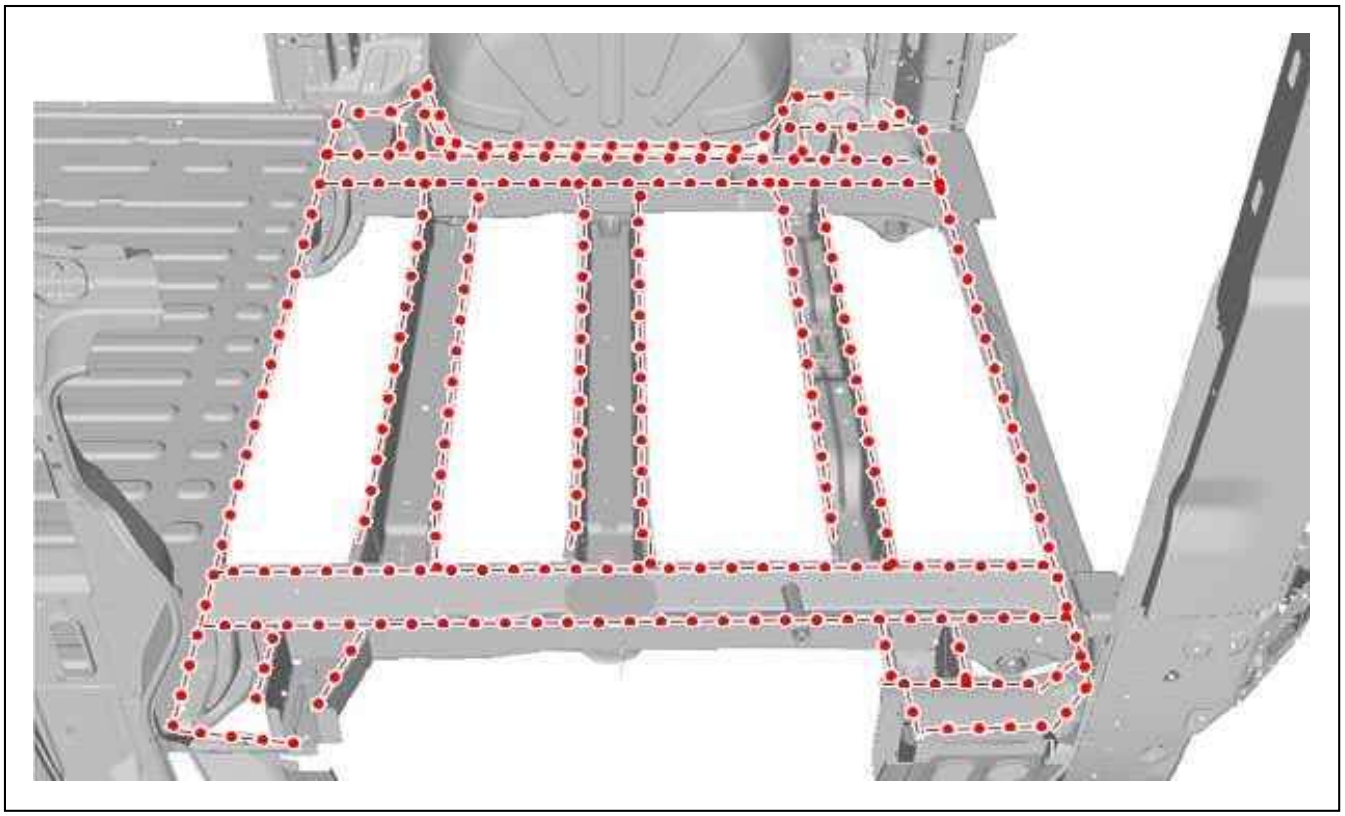

Figure : C4BP1QED

Figure 4.
Prepare the mating edges .
Align the mating edges and protect them with a weldable primer.

6. Adjustment

Present the component for adjustment.
Check the fits and clearances (see the relevant operation).

7. Welding

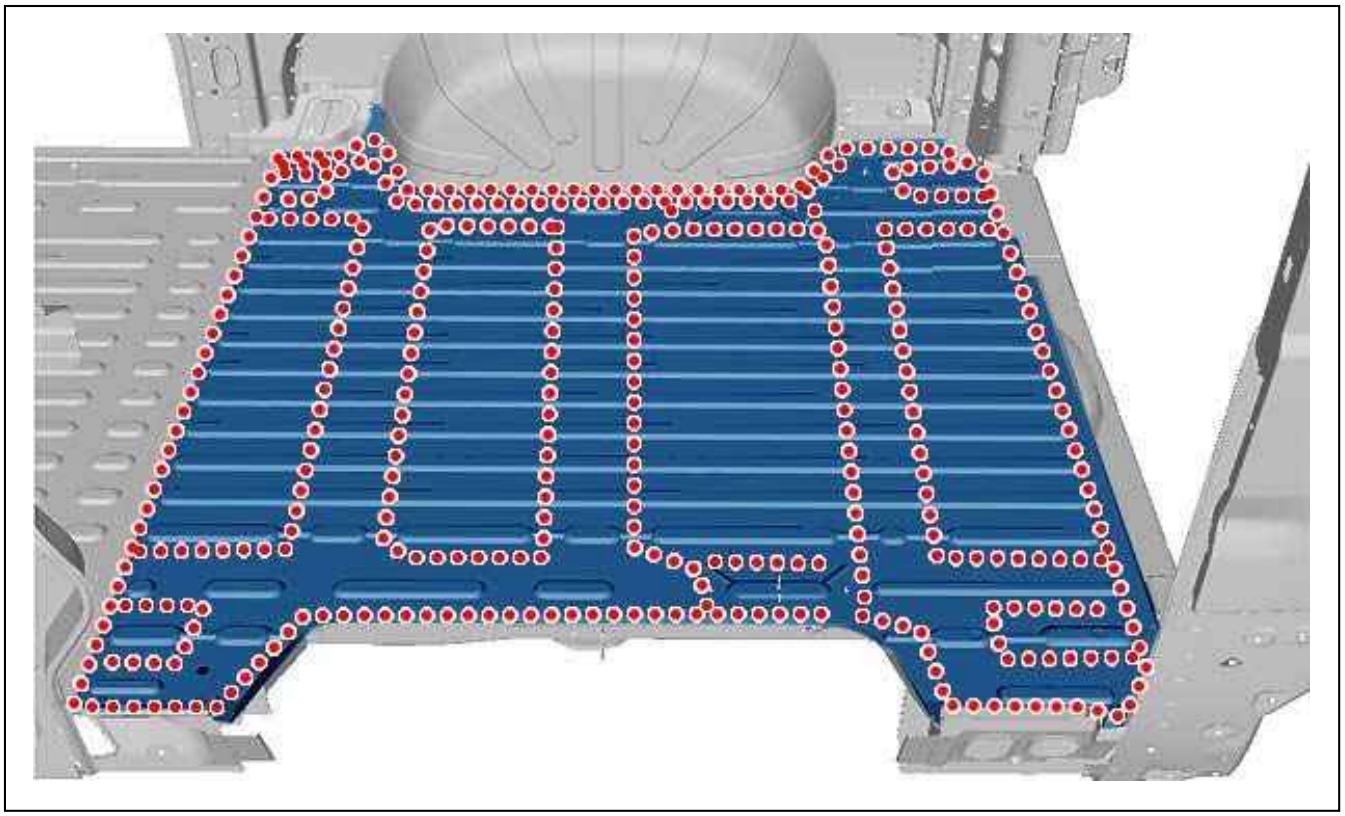

Figure : C4BP1QFD

Figure 5.
Weld with MIG or MAG spot welds.
Grind the spot welds.

8. Sealing

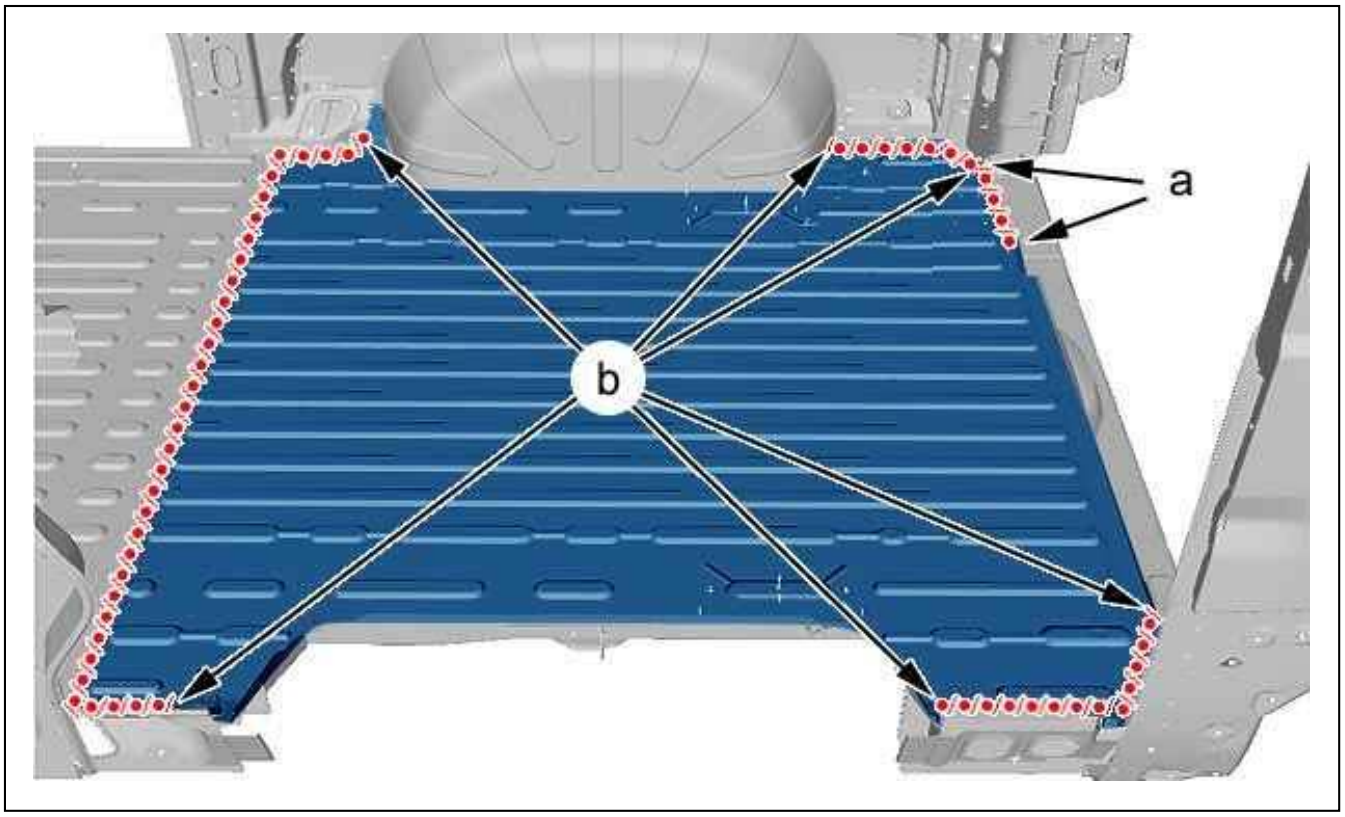

Figure : C4BP1QGD

Figure 6.
Apply a phosphate-print layer on the zone laid bare.
Apply a sealing mastic of type " A4" (at "a") (see the relevant operation).
Apply a sealing mastic of type " A1" (at "b") (see the relevant operation).

9. Protection

Paint then spray into the hollow sections, product index C5, in the repair zone (see the relevant operation).
Apply an anti-chip layer (see the relevant operation).

10. Reinitialisation

Reconnect the battery.

ESSENTIAL : Perform the operations to be carried out following reconnection of the battery.

REPLACEMENT : PART INNER REAR PANEL ASSEMBLY

ESSENTIAL : All of the stripped surfaces must be protected by means of the approved electrolytic rezincing process (see the relevant operation).

ESSENTIAL : Observe the elementary rules of hygiene and safety (wear a face mask to protect against fumes and vapour - work in a well ventilated space).

1. Additional operations

Disconnect the battery.
Replace the part rear floor (see the relevant operation).
Release the wiring harnesses.

2. Identification of the replacement parts

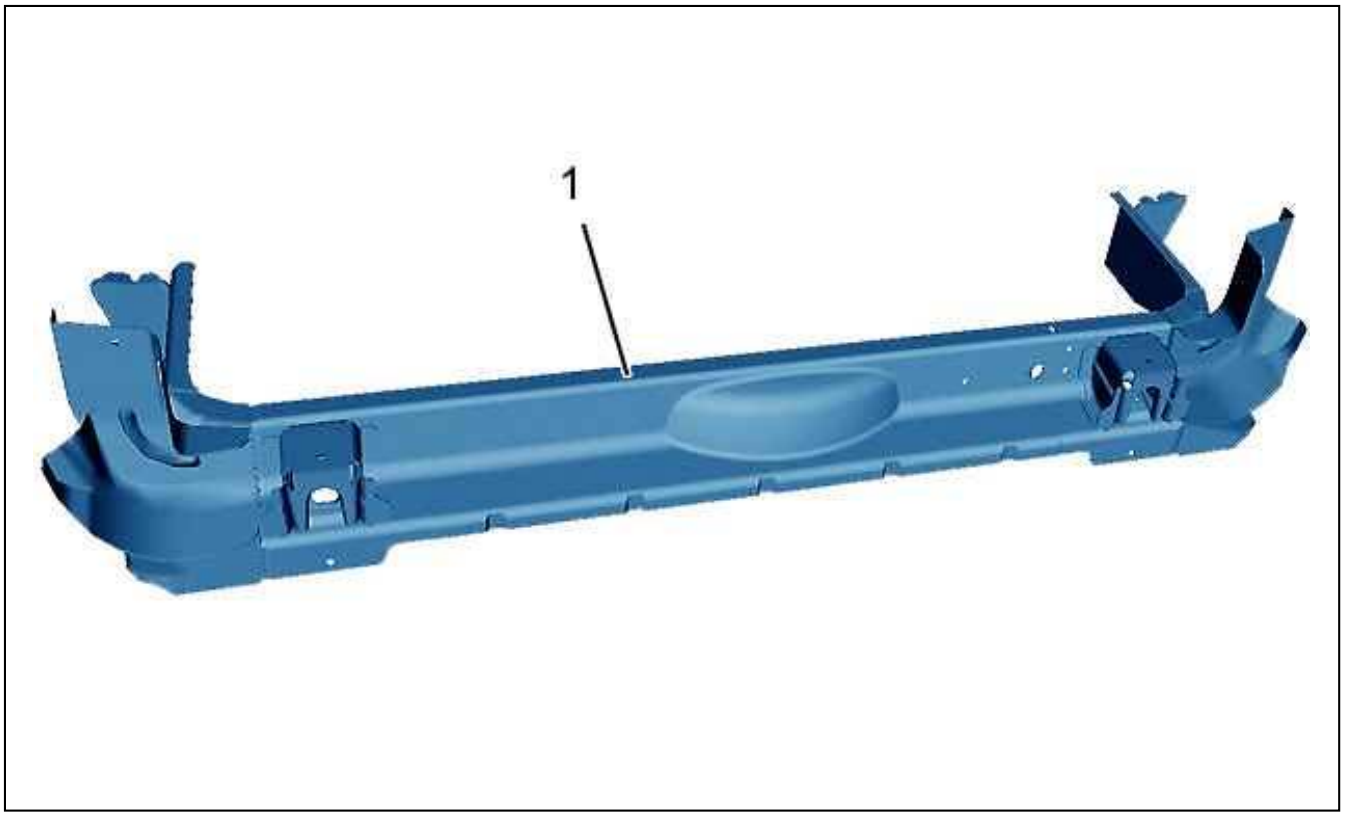

Figure : C4BP1QHD

Figure 1.
(1) Rear inner panel assembly.

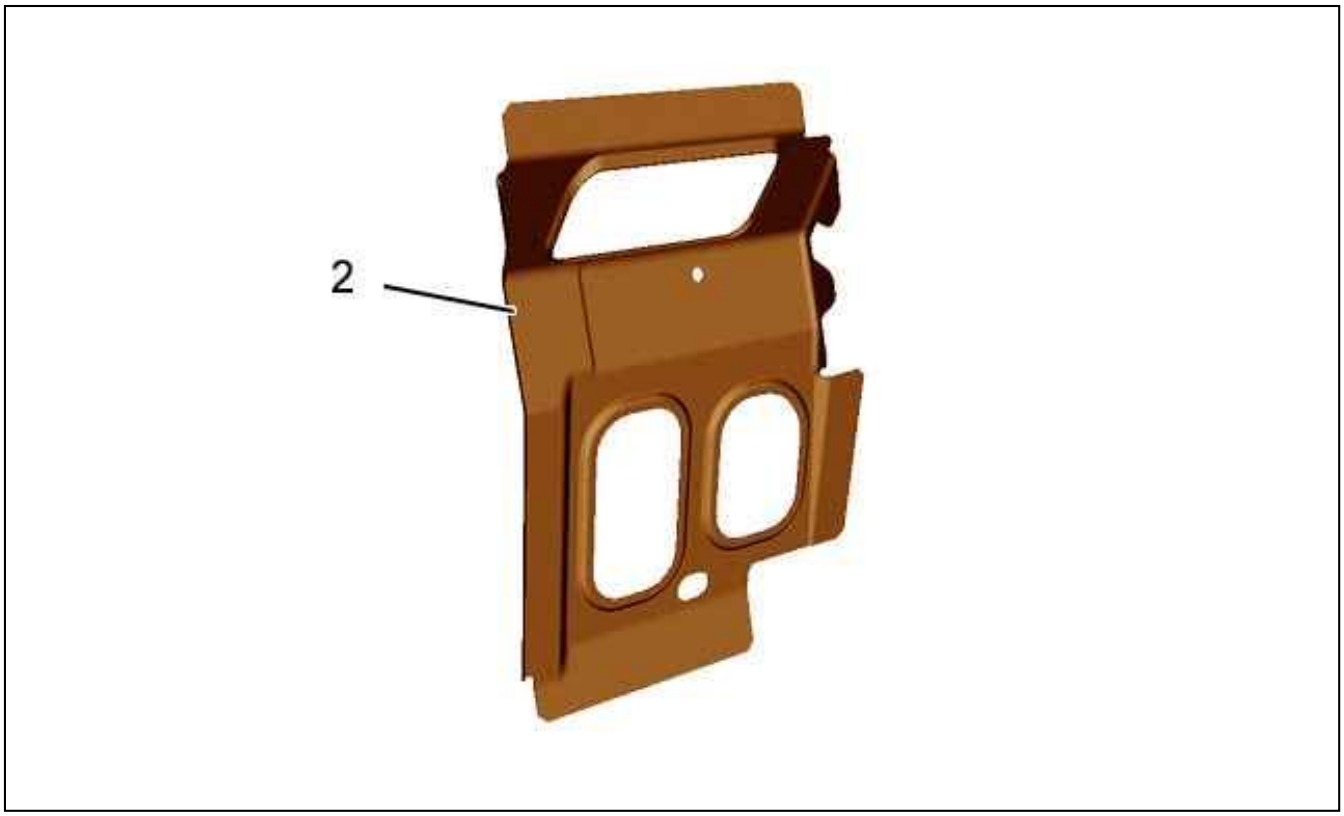

Figure : C4BP1QJD

Figure 2.
(2) Rear left lower connection panel.

3. Composition of the replacement parts

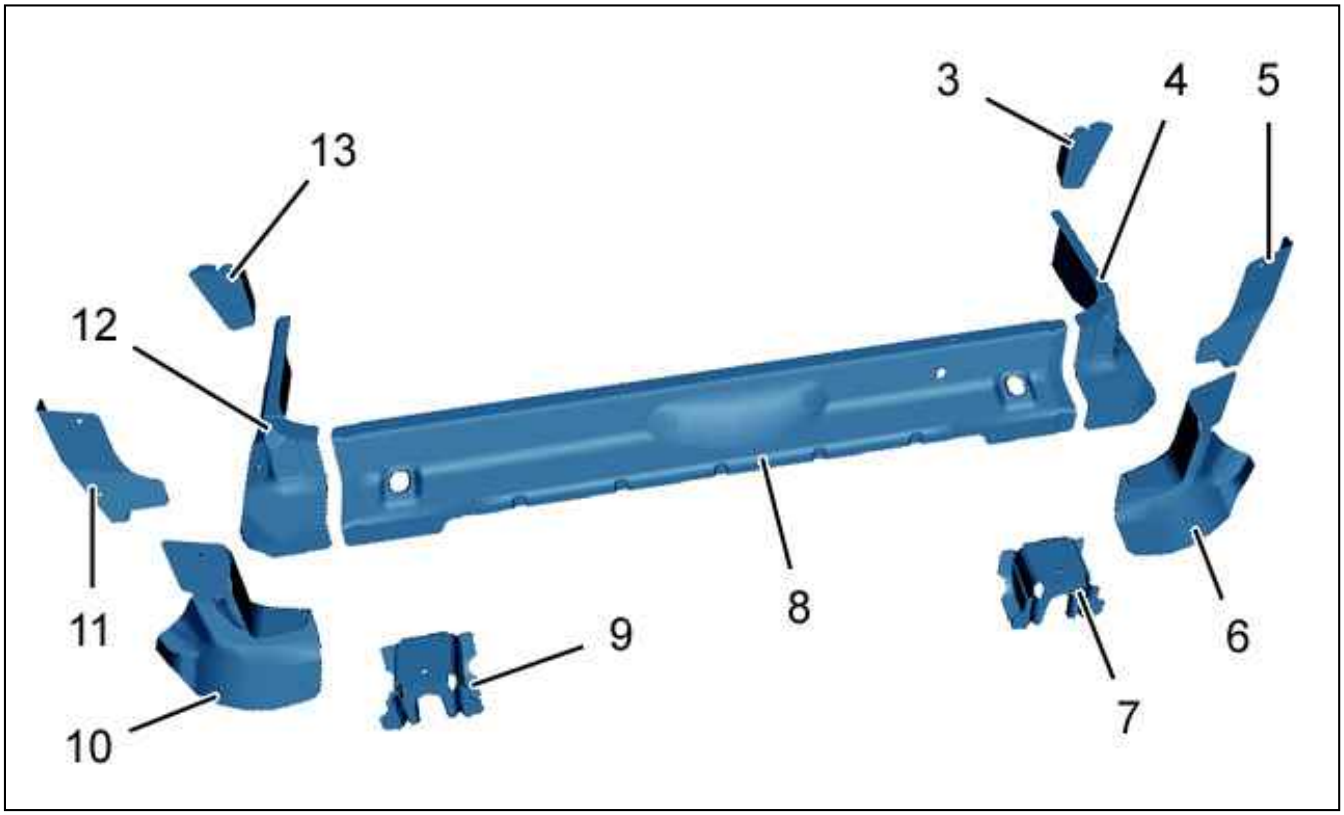

Figure : C4BP1QKD

Figure 3.
(3) Rear right floor side closing plate strengthener.
(4) Right-hand wheelarch and body side connection panel.
(5) Rear right floor connection panel.
(6) Rear right connection panel strengthener.
(7) Inner rear right panel strengthener.
(8) Inner rear panel .
(9) Inner rear left panel strengthener.
(10) Left-hand connection panel strengthener.
(11) Rear left floor connection panel.
(12) Left-hand wheelarch and body side connection panel.
(13) Rear left floor closing plate side strengthener.

4. Replacement part preparation

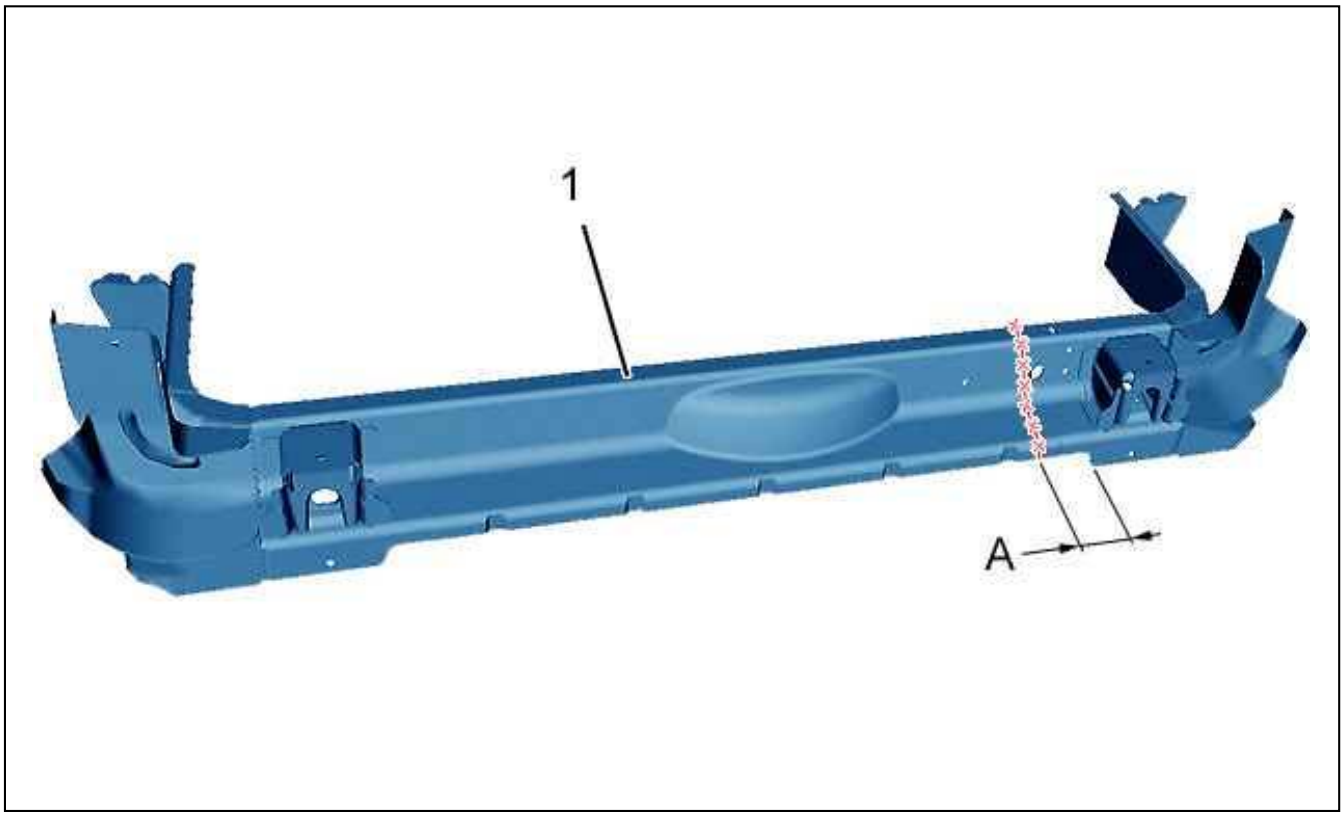

Figure : C4BP1QLD

Figure 4.
(1) Rear inner panel assembly.
Mark then cut (final cutting).
Prepare the mating edges .

5. Cutting out

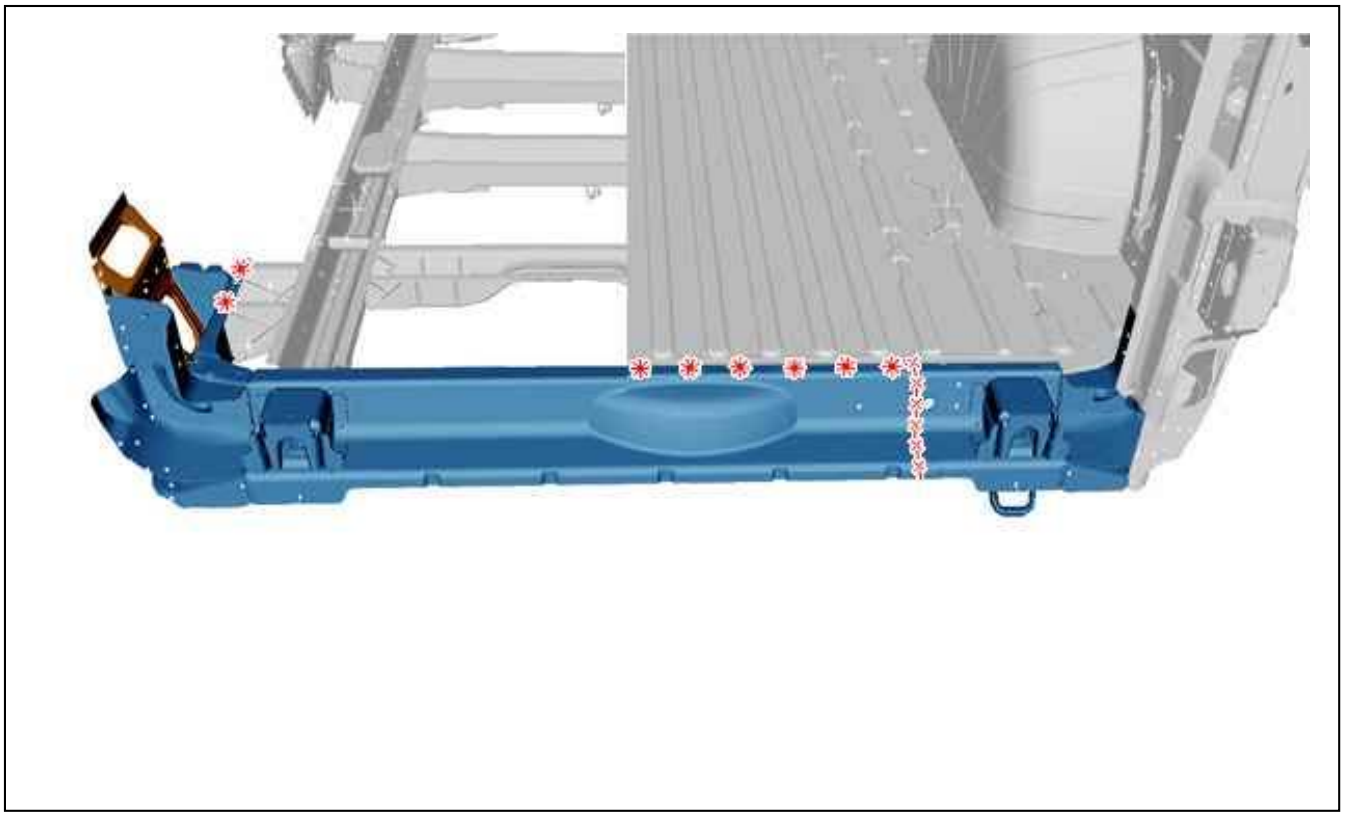

Figure : C4BP1QMD

Figure 5.
Mark then cut (preliminary cut).
Cut out the spot welds .

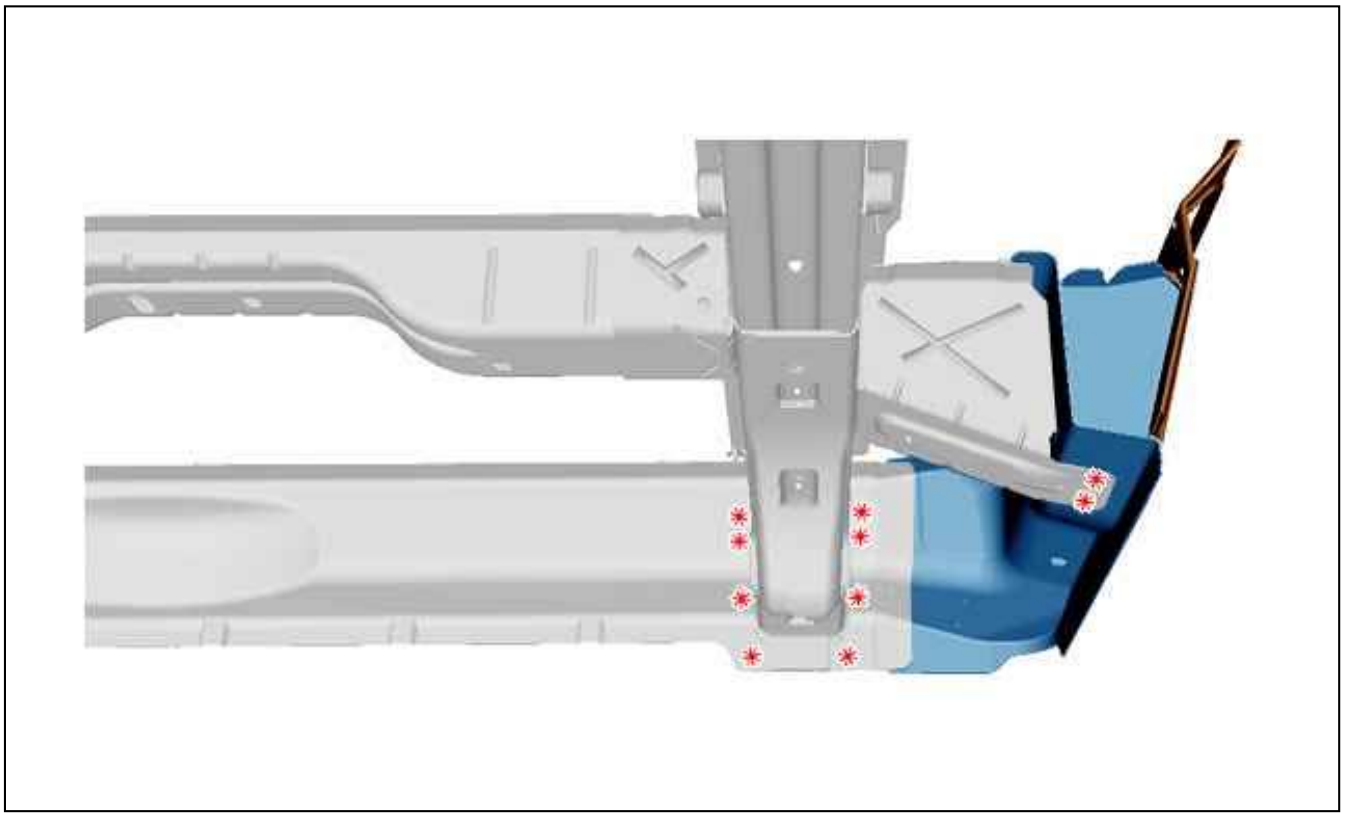

Figure : C4BP1QND

Figure 6.
Cut out the spot welds .

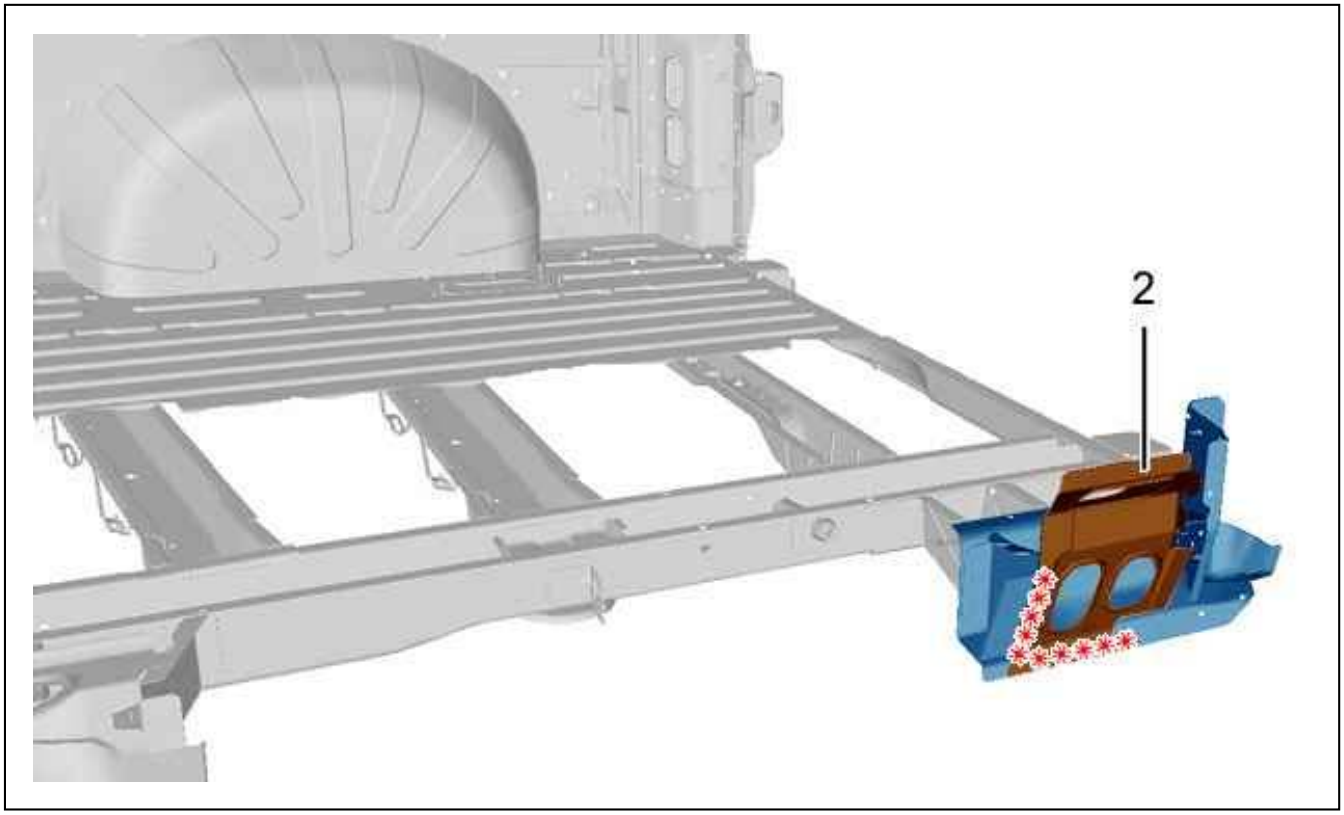

Figure : C4BP1QPD

Figure 7.
Cut out the spot welds .
Remove the rear left lower connection panel (2).

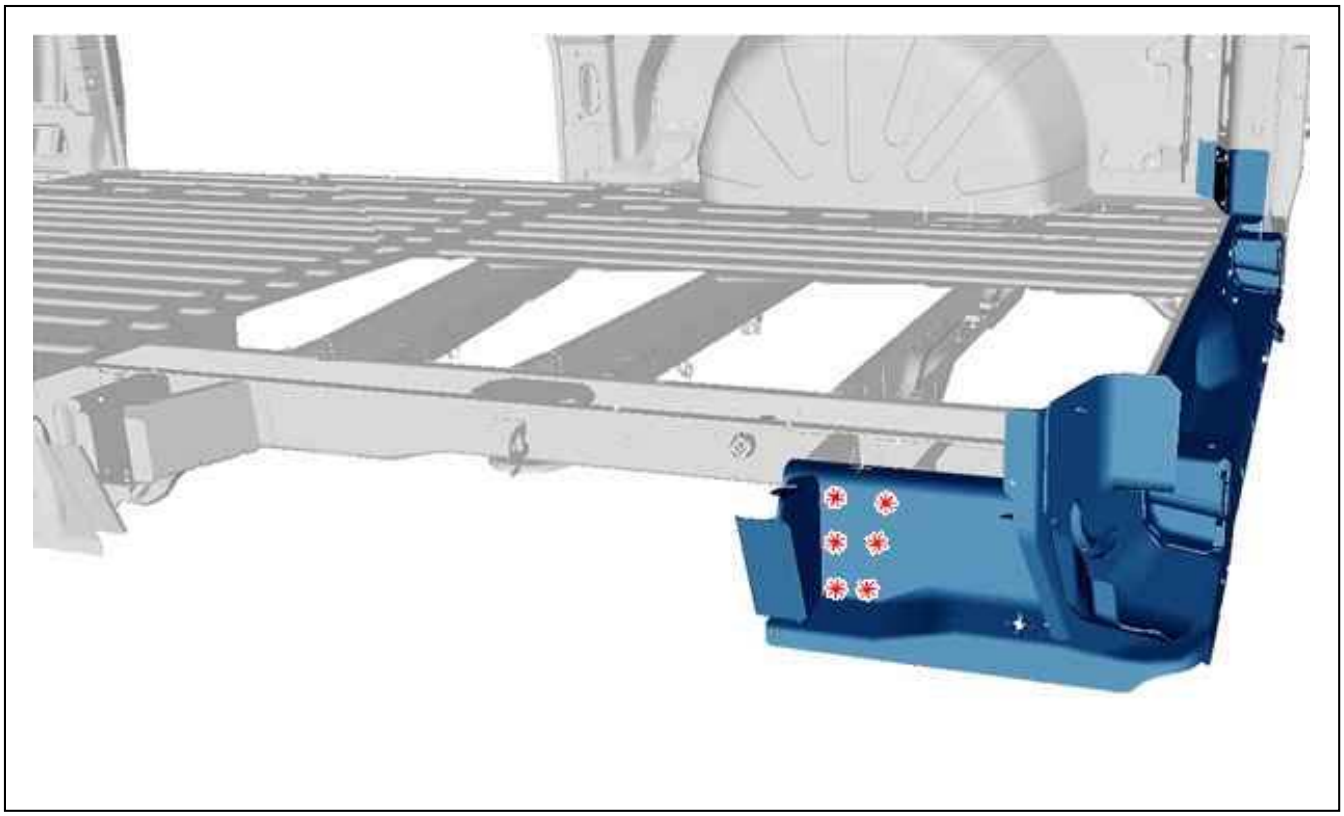

Figure : C4BP1QQD

Figure 8.
Cut out the spot welds .
Remove the part inner rear panel.

6. Bodywork cleaning and preparation

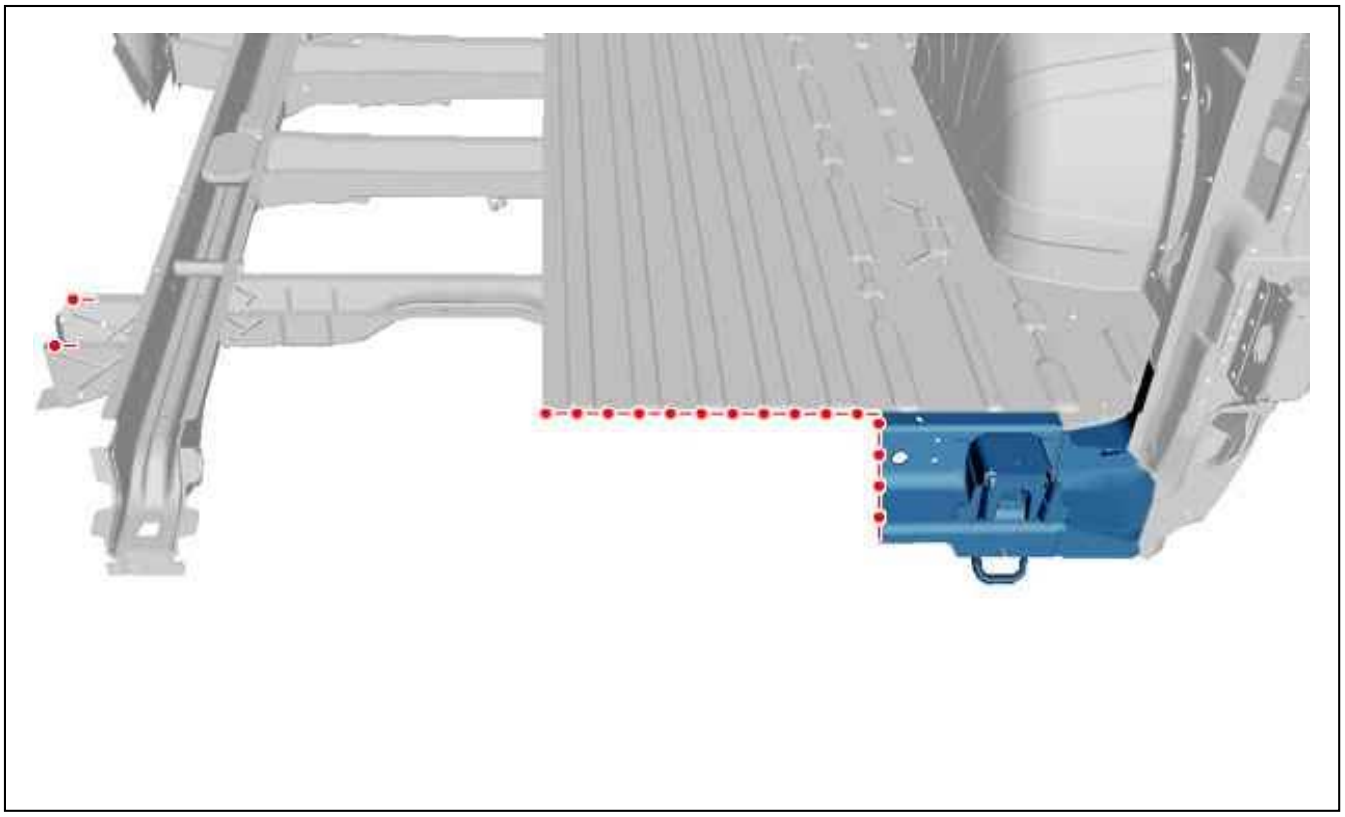

Figure : C4BP1QRD

Figure 9.
Prepare the mating edges .
Align the mating edges and protect them with a weldable primer.

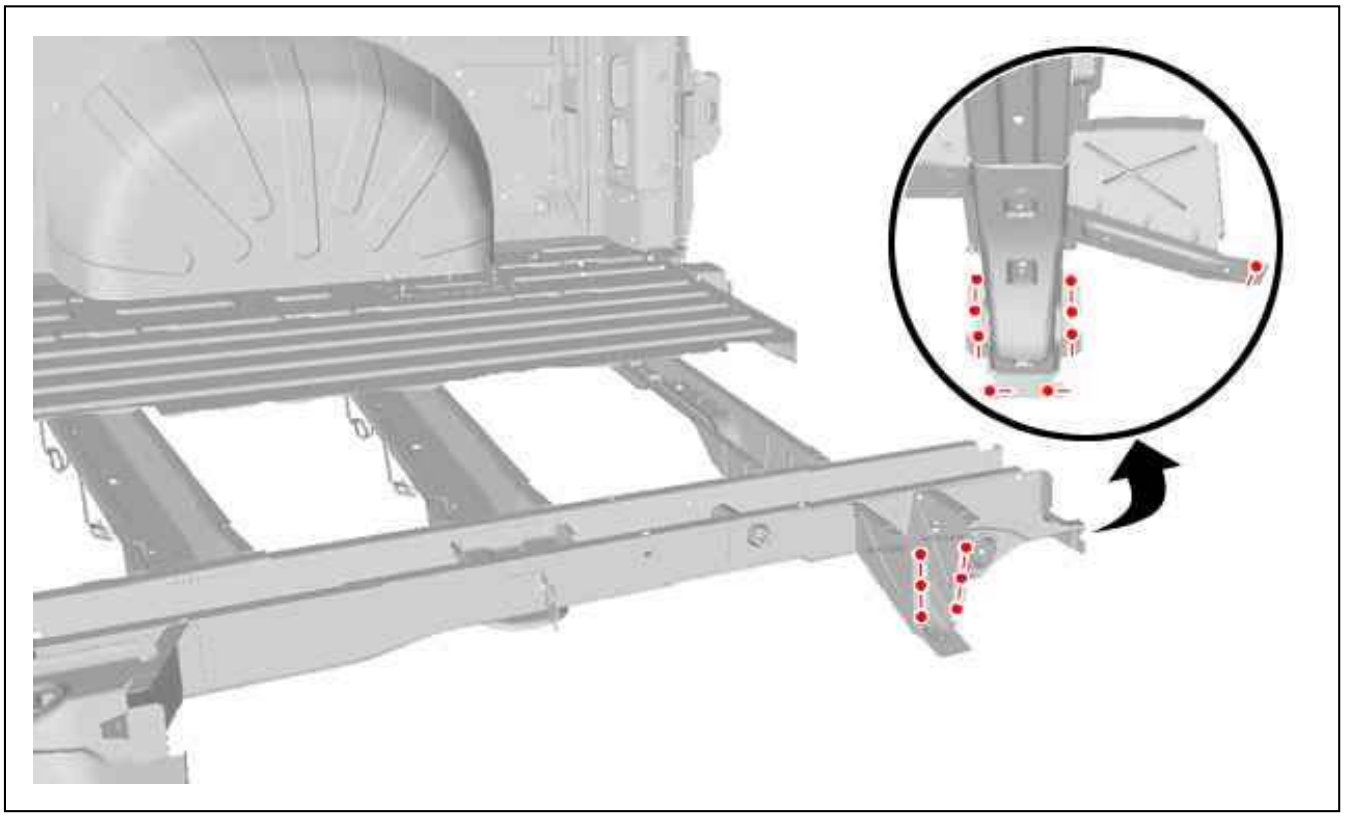

Figure : C4BP1QSD

Figure 10.
Prepare the mating edges .
Align the mating edges and protect them with a weldable primer.

7. Adjustment

Present the elements, allowing for adjustment.
Check the fits and clearances (see the relevant operation).

8. Welding

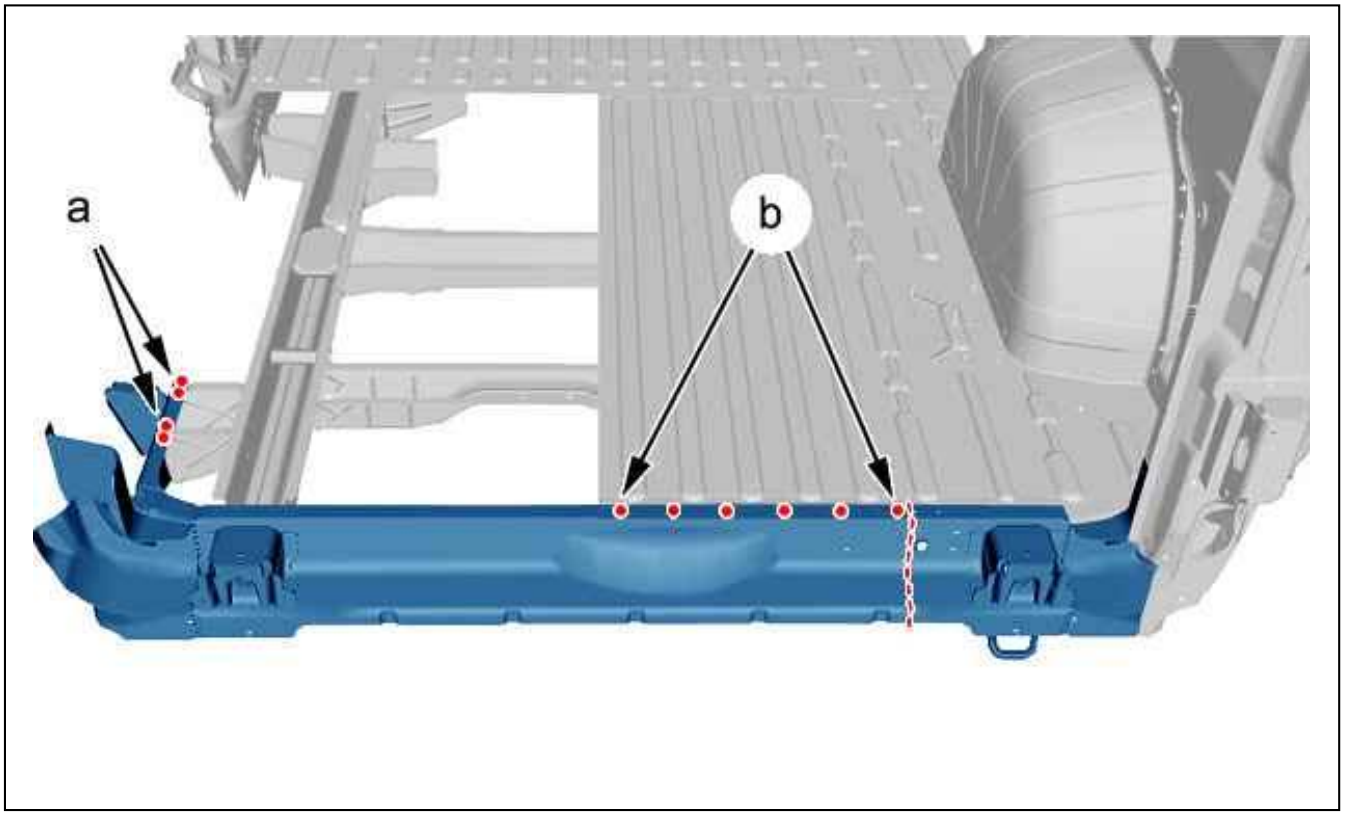

Figure : C4BP1QTD

Figure 11.
Weld using successive beads (MIG or MAG).
Grind the welds.
Weld with plug welds (MIG or MAG) (at "b").
Grind the spot welds.
Weld with electric spot welds (at "a").

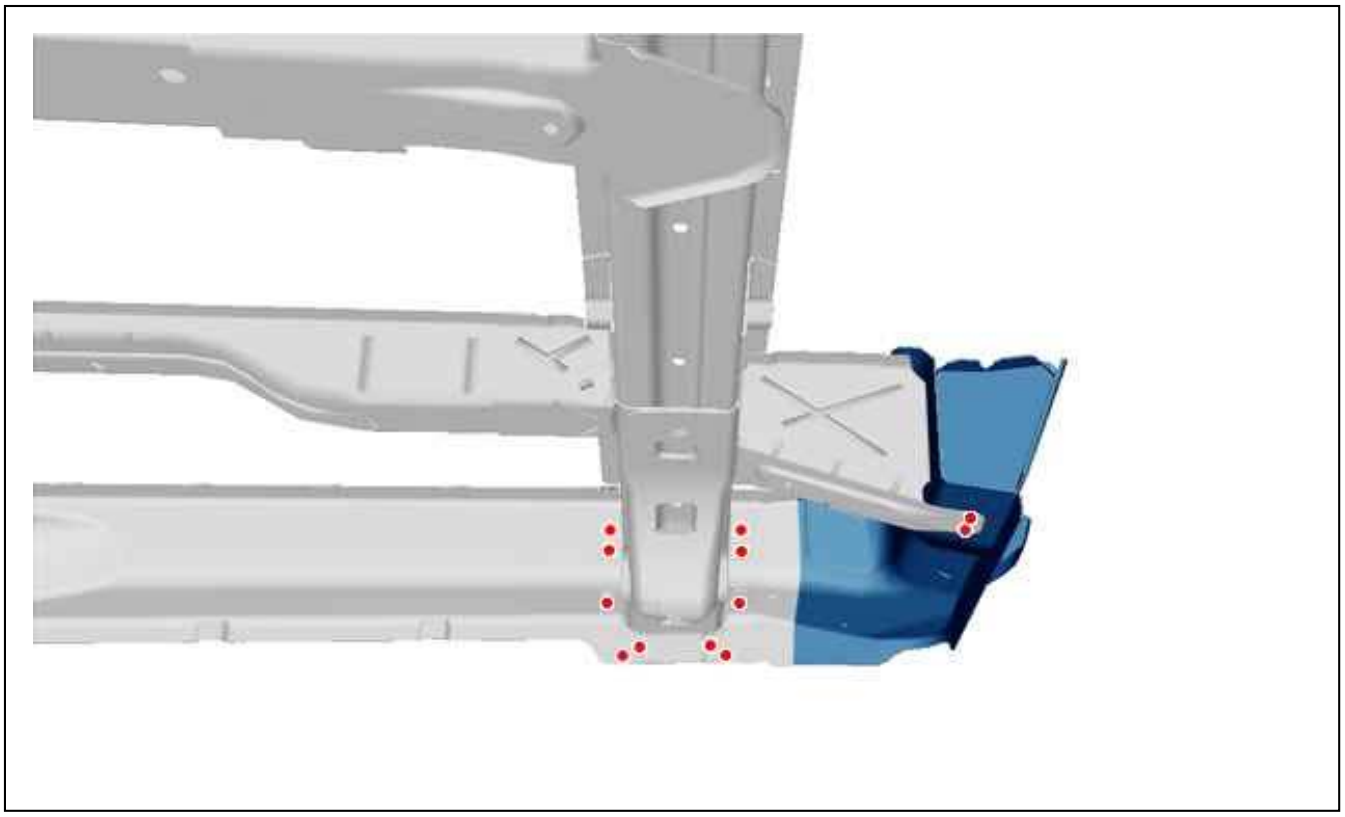

Figure : C4BP1QUD

Figure 12.
Weld with plug welds (MIG or MAG).
Grind the spot welds.

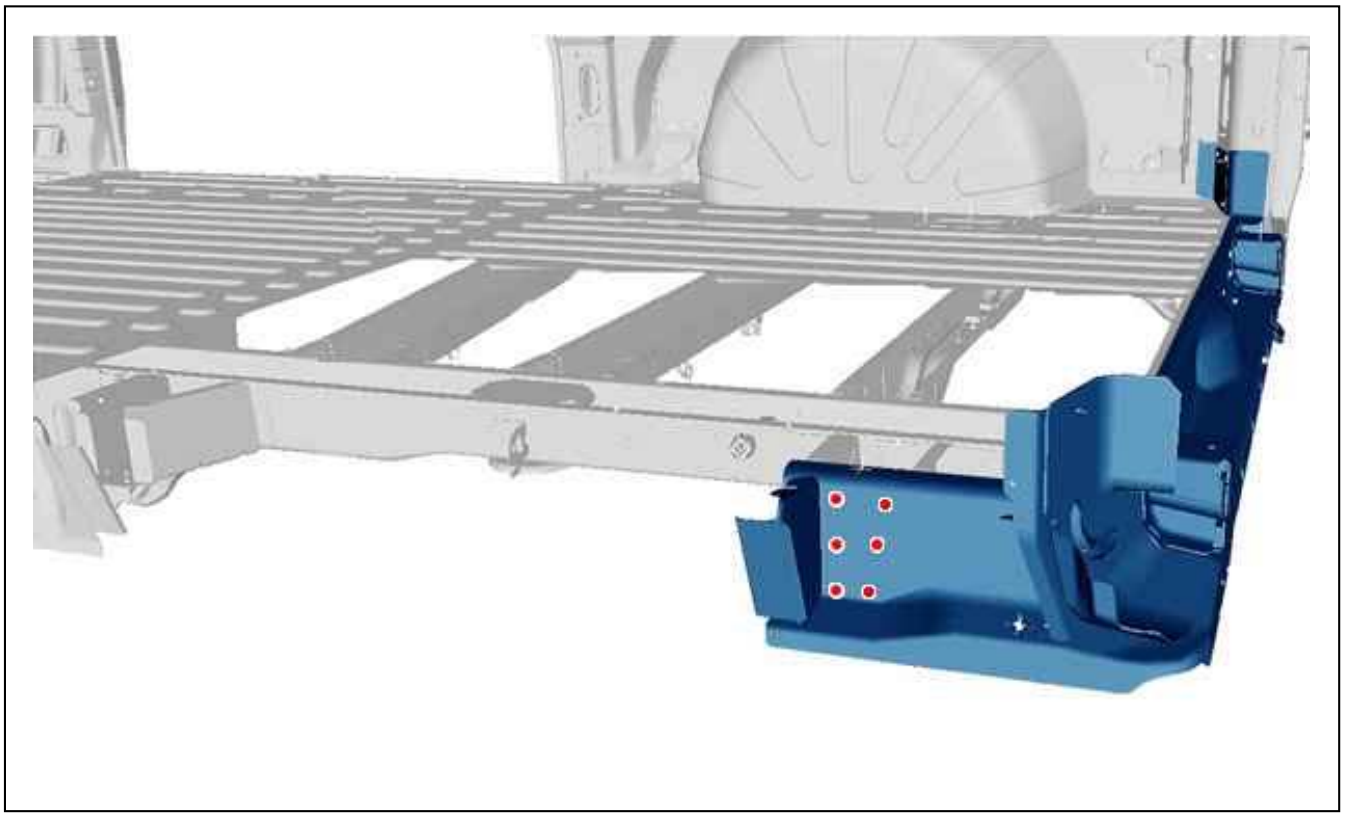

Figure : C4BP1QVD

Figure 13.
Weld with electric spot welds.

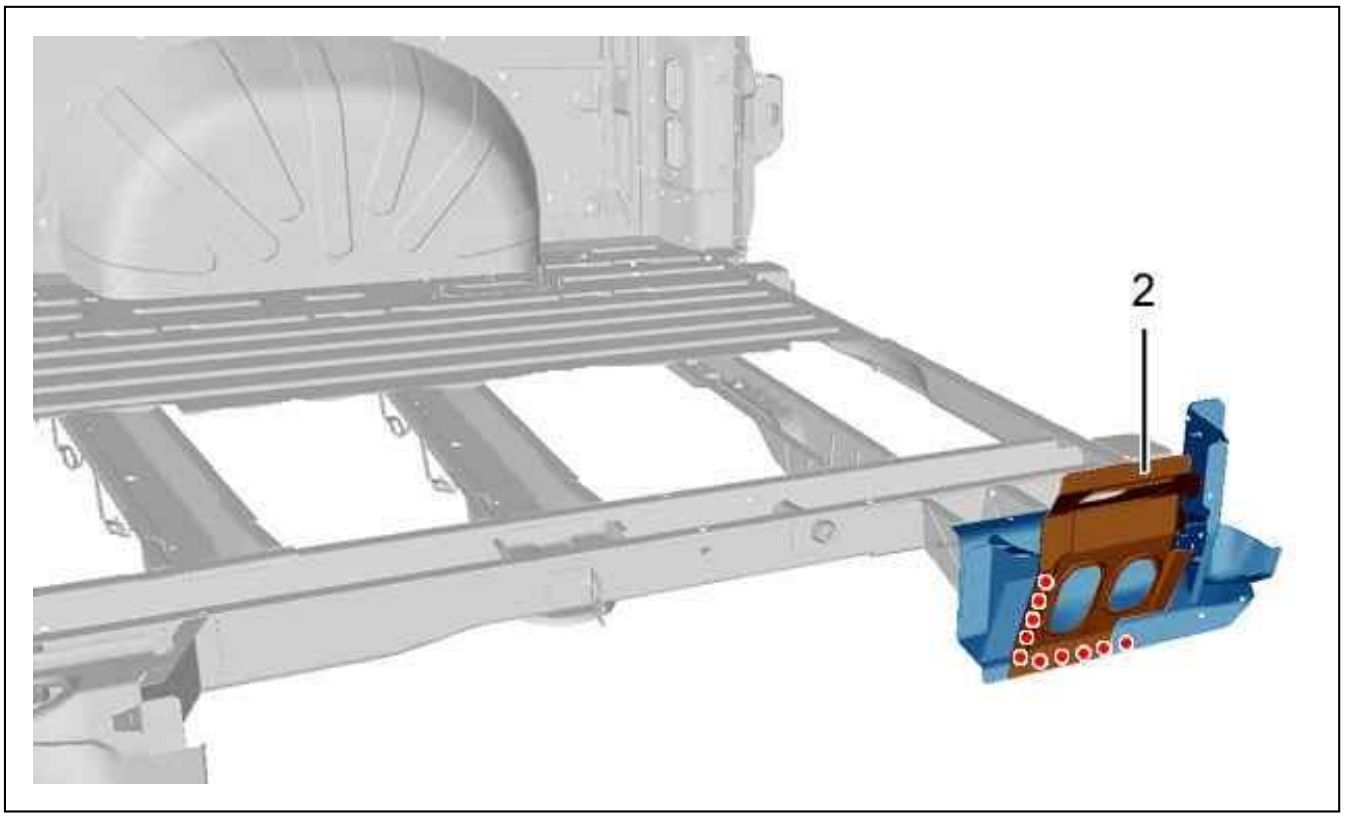

Figure : C4BP1QWD

Figure 14.
Refit the rear left lower connection panel (2).
Weld with electric spot welds.

9. Protection

Paint then spray into the hollow sections, product index C5, in the repair zone (see the relevant operation).
Apply an anti-chip layer (see the relevant operation).

10. Reinitialisation

Reconnect the battery.

ESSENTIAL : Perform the operations to be carried out following reconnection of the battery.

REPLACEMENT : REAR LONGERON AND ITS CROSSMEMBERS

ESSENTIAL : All of the stripped surfaces must be protected by means of the approved electrolytic rezincing process (see the relevant operation).

ESSENTIAL : Observe the elementary rules of hygiene and safety (wear a face mask to protect against fumes and vapour - work in a well ventilated space).

1. Additional operations

Disconnect the battery.
Replacement :

- Rear inner panel assembly (see the relevant operation)
- Rear floor panel (see the relevant operation)

Release the wiring harnesses.

2. Identification of the replacement parts

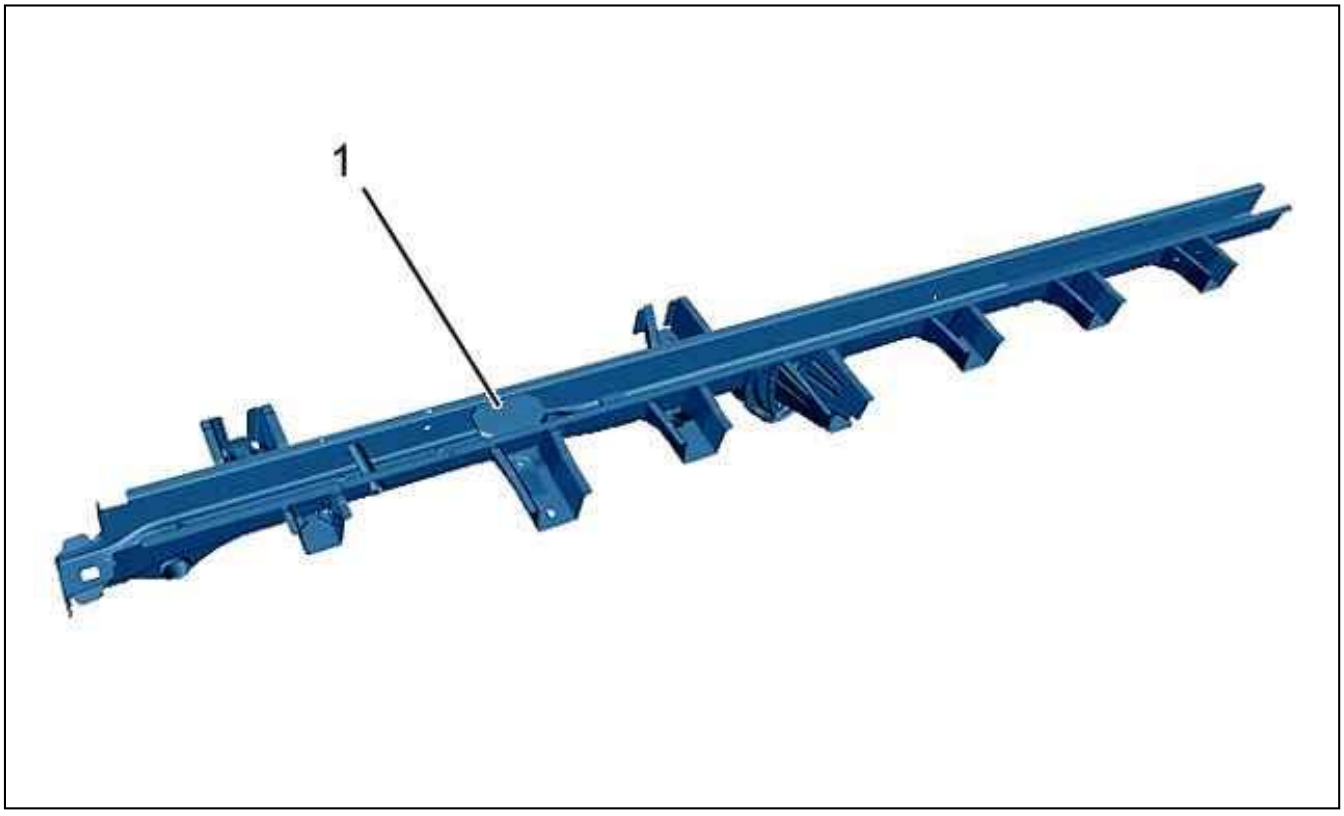

Figure : C4BP1U7D

Figure 1.
(1) Rear longeron assembly .

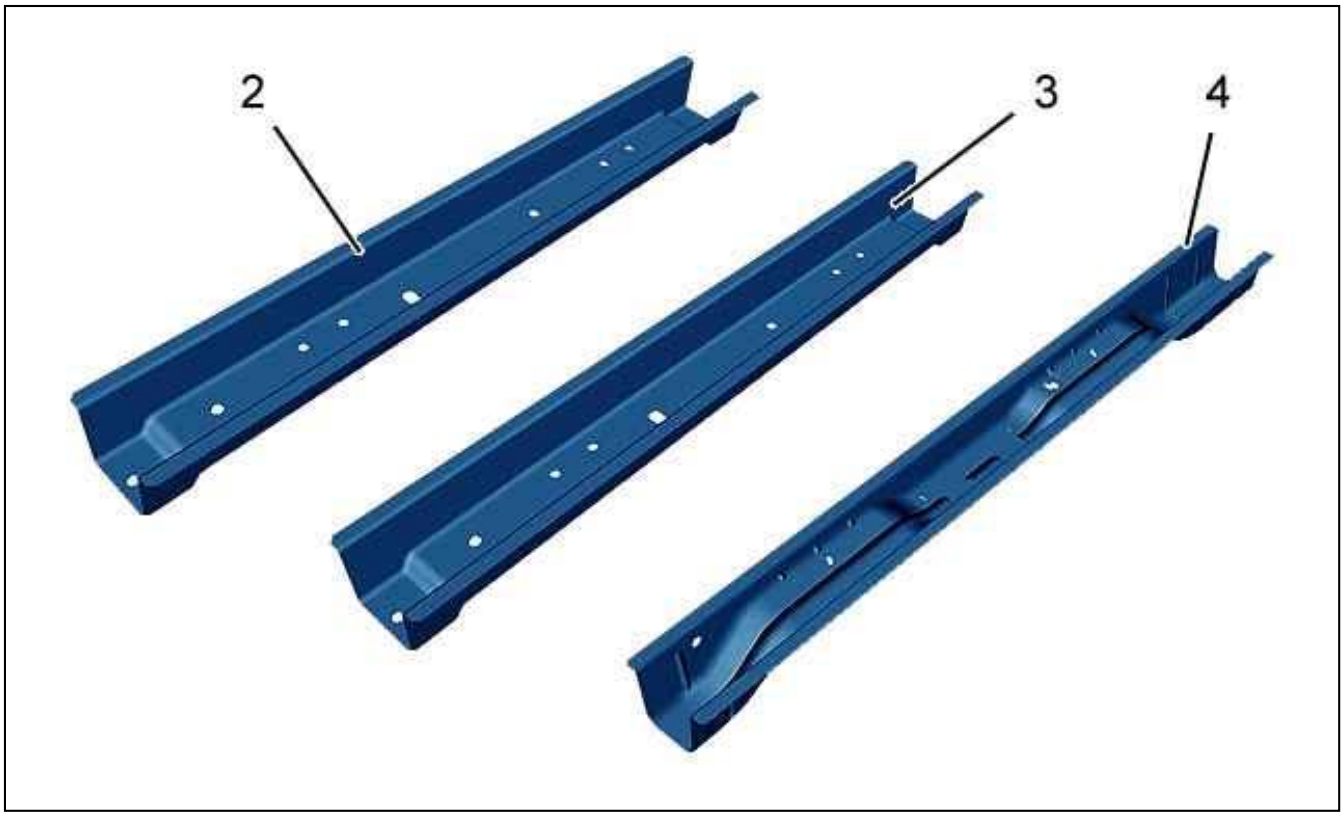

Figure : C4BP1U8D

Figure 2.
(2) Rear floor rear cross member (front section).
(3) Rear floor rear cross member (central section).
(4) Rear floor rear cross member (rear section).

3. Composition of the replacement parts

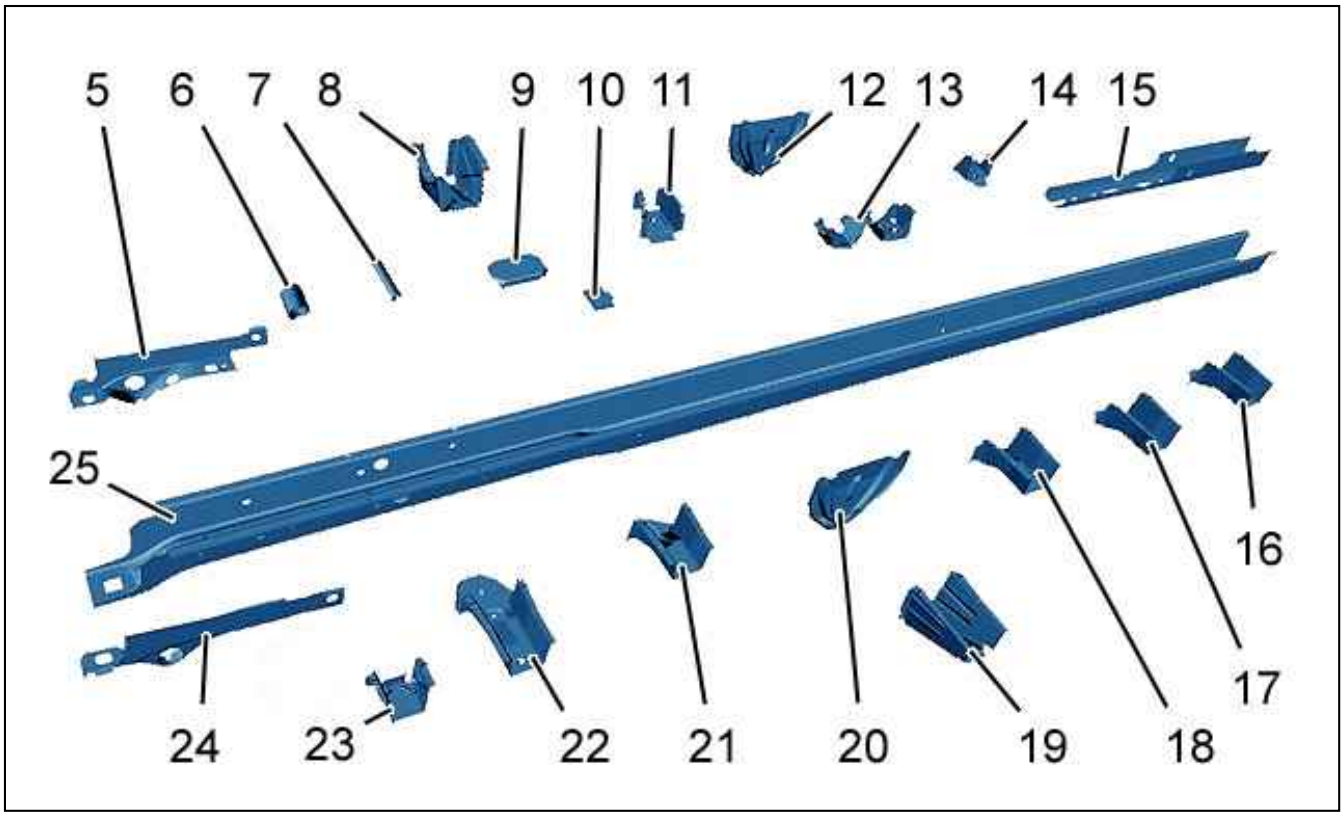

Figure : C4BP1U9D

Figure 3.
(5) Rear suspension exterior strengthener .
(6) Rear suspension fixing .
(7) Damper to rear axle fixing .
(8) Stabiliser bar attachment strengthener .
(9) Structural insert .
(10) Rear suspension attachment front interior strengthener .
(11) Junction panel Body side.
(12) Left-hand suspension attachment exterior strengthener .
(13) Rear suspension attachment front strengthener .
(14) Additional heating rear fixing .
(15) Sill strengthener .
(16) Rear intermediate crossmember connection .
(17) Rear intermediate crossmember connection .
(18) Rear intermediate crossmember connection .
(19) Rear suspension attachment front interior strengthener .
(20) Left-hand suspension attachment interior strengthener .
(21) Rear floor rear crossmember connection (front section).
(22) Rear floor rear crossmember connection (central section).
(23) Rear floor rear crossmember connection (rear section).
(24) Rear suspension interior strengthener .
(25) Rear longeron.

4. Replacement part preparation

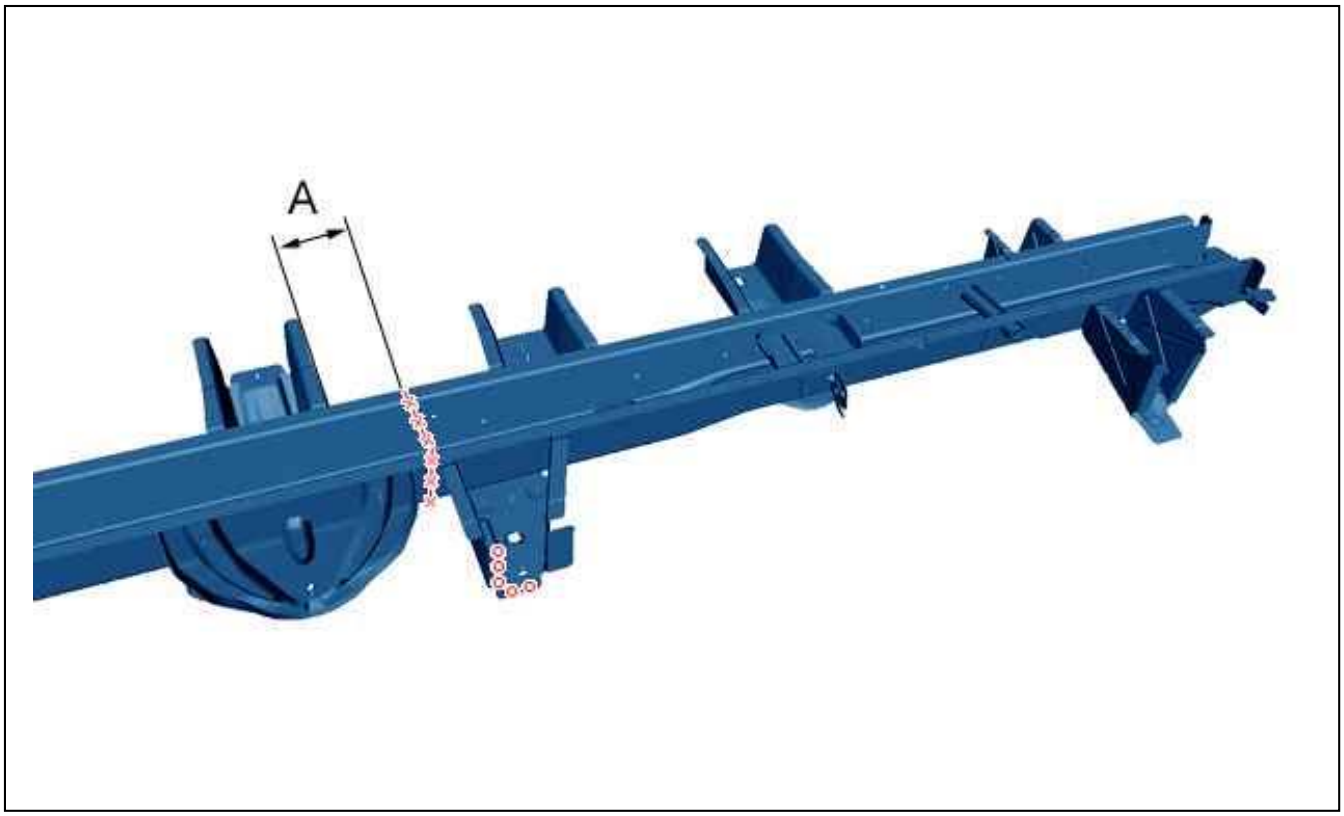

Figure : C4BP1UAD

Figure 4.
Mark then drill to Ø 8 mm for later plug welding (5 holes).
Mark then cut.
Prepare the mating edges .

5. Cutting out

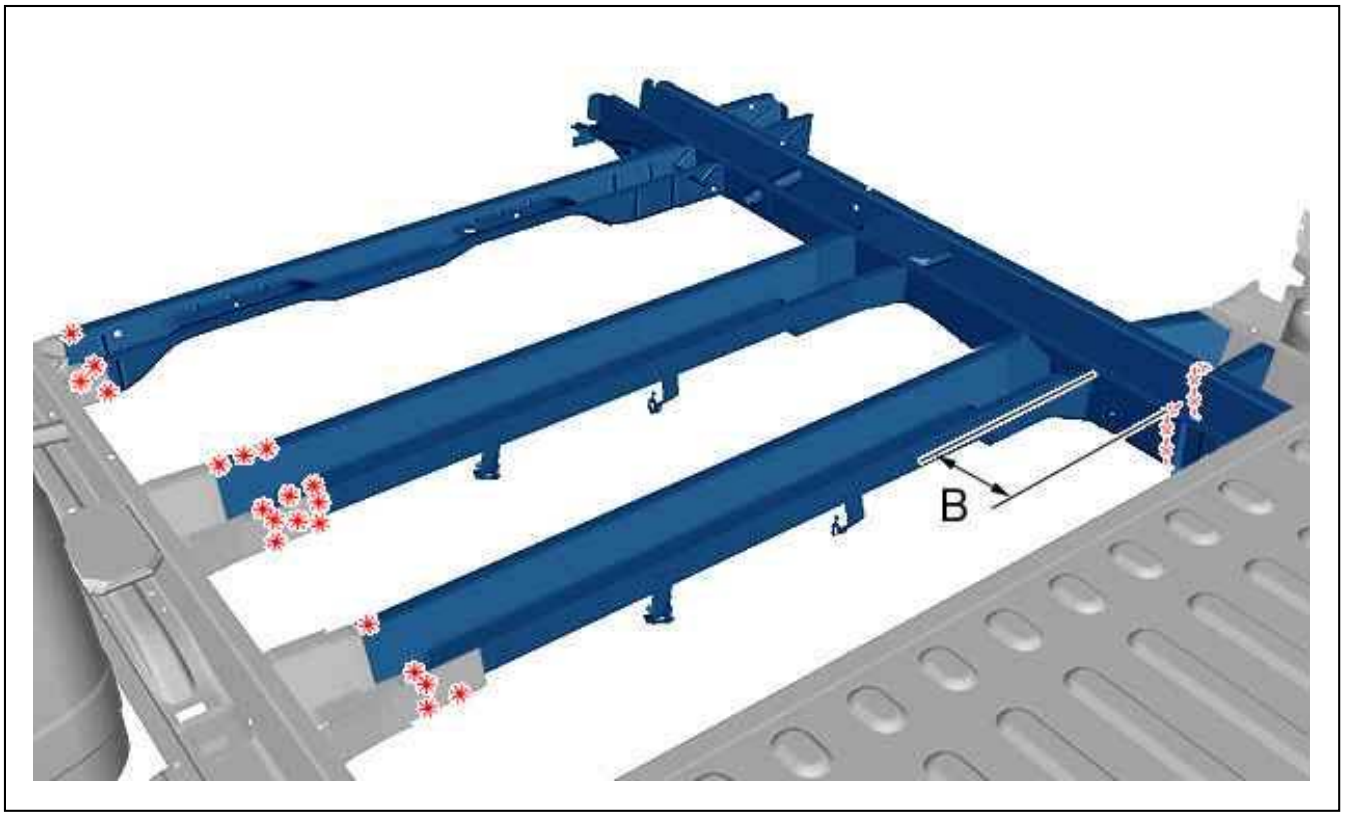

Figure : C4BP1UBD

Figure 5.
Mark then cut.
Cut out the spot welds .

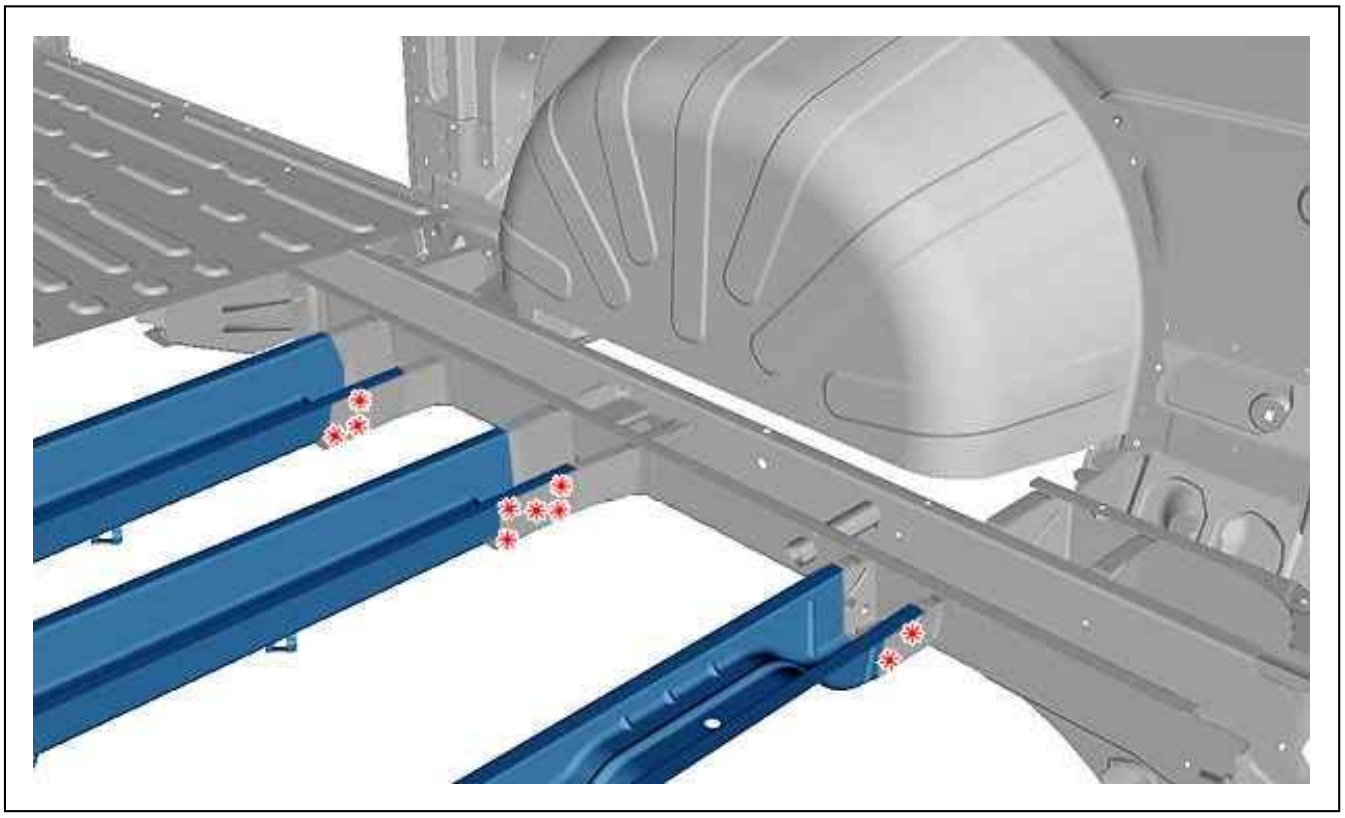

Figure : C4BP1UCD

Figure 6.
Cut out the spot welds .

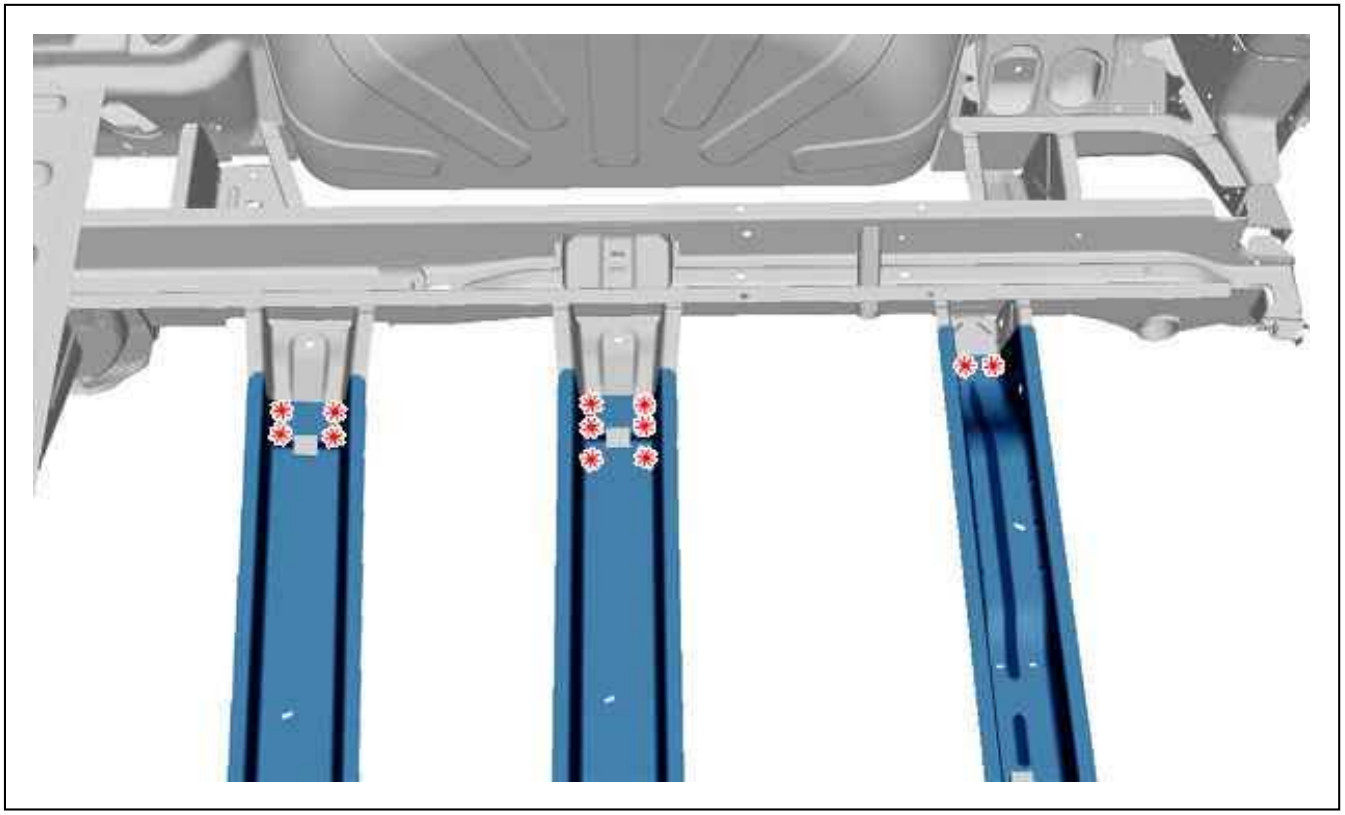

Figure : C4CP1ZSD

Figure 7.
Cut out the spot welds .

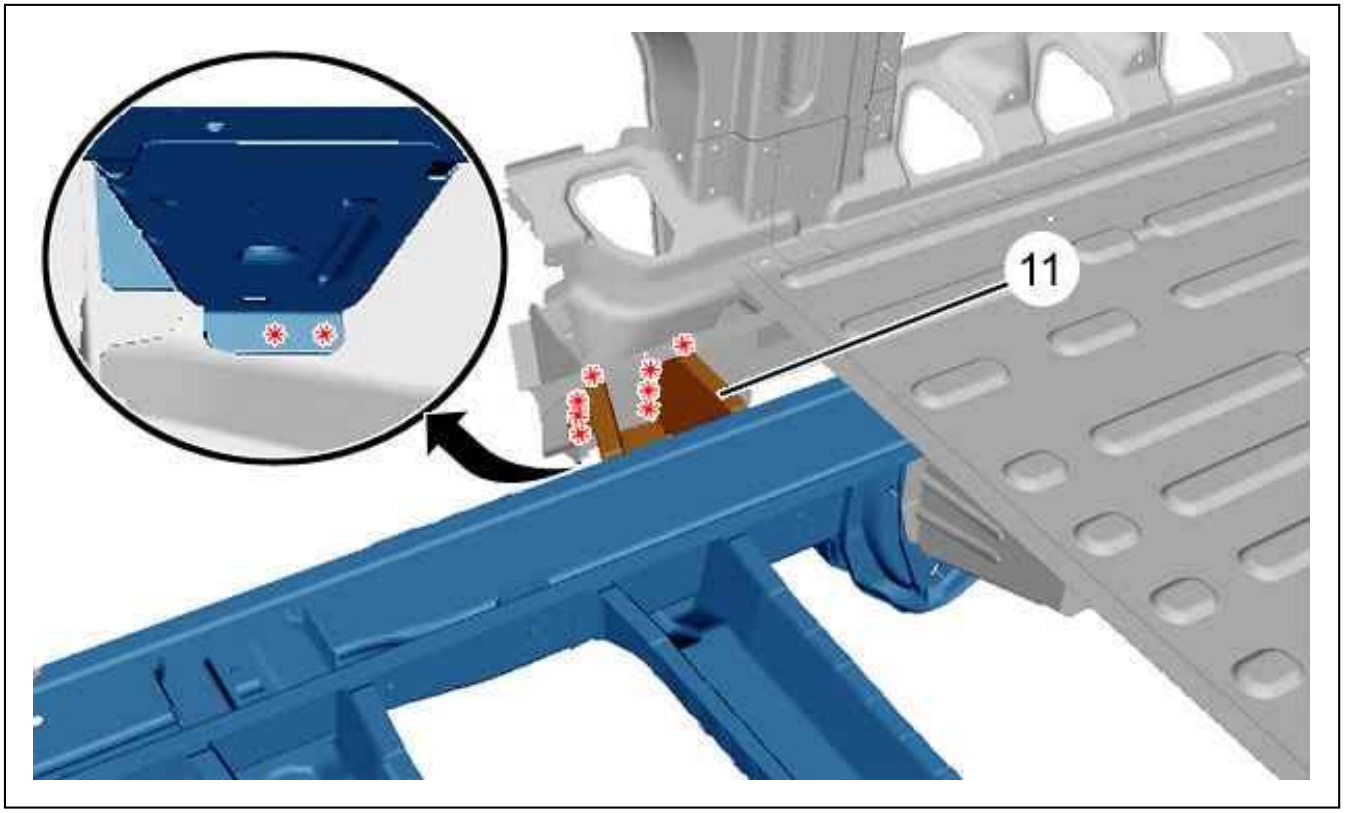

Figure : C4BP1UDD

Figure 8.
Cut the body side connection panel (11) to facilitate the unhooking of the spot welds.
Remove the partial rear longeron and its crossmembers .
Cut out the spot welds .

6. Bodywork cleaning and preparation

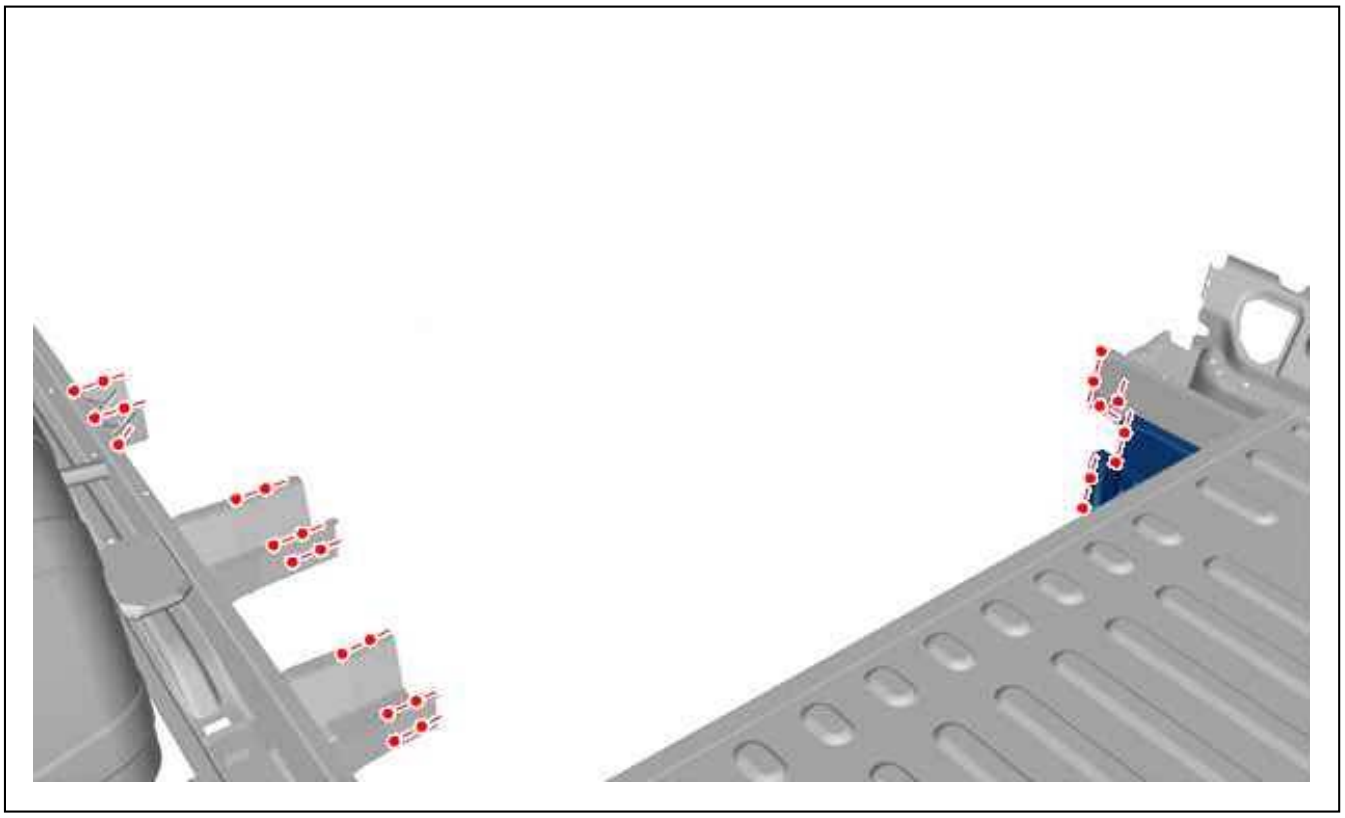

Figure : C4BP1UED

Figure 9.
Prepare the mating edges .
Align the mating edges and protect them with a weldable primer.

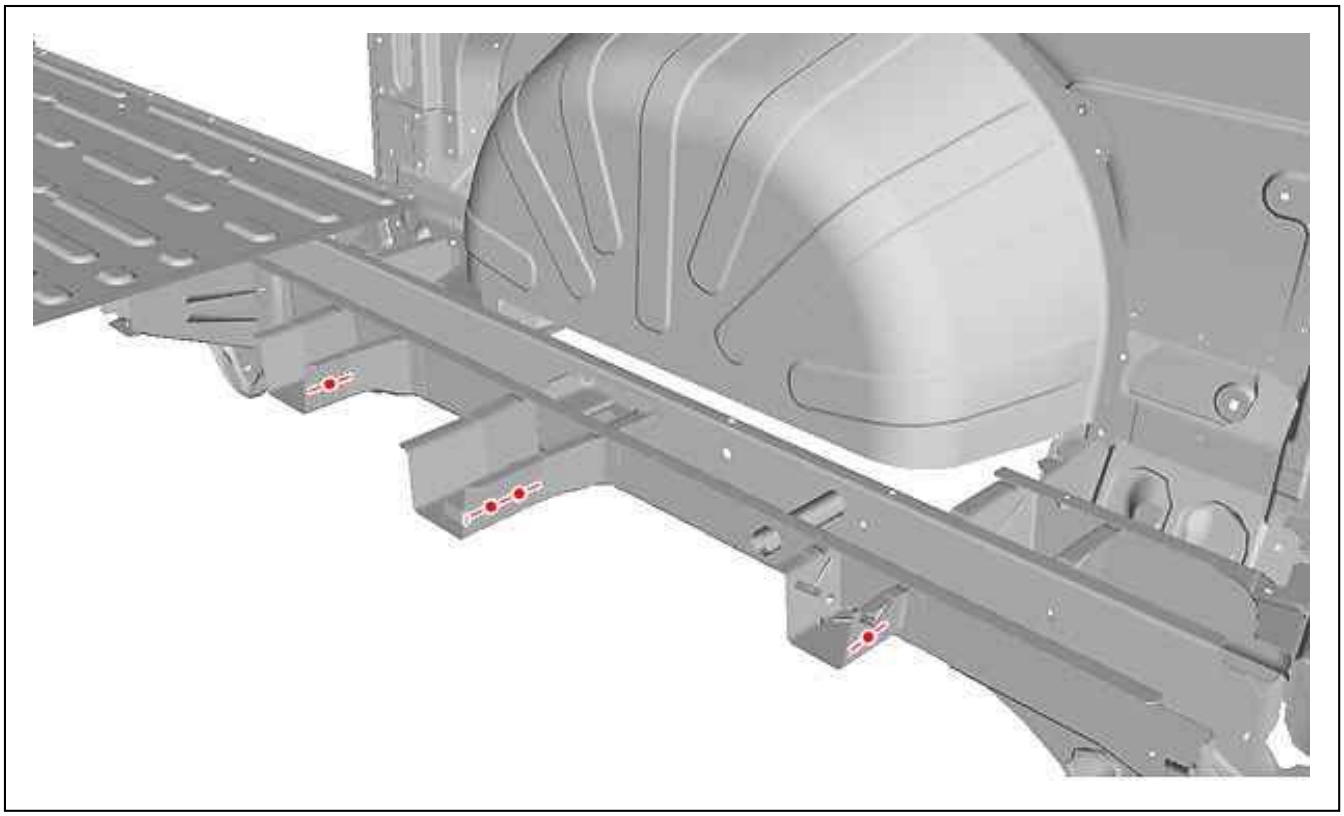

Figure : C4CP1ZTD

Figure 10.
Prepare the mating edges .
Align the mating edges and protect them with a weldable primer.

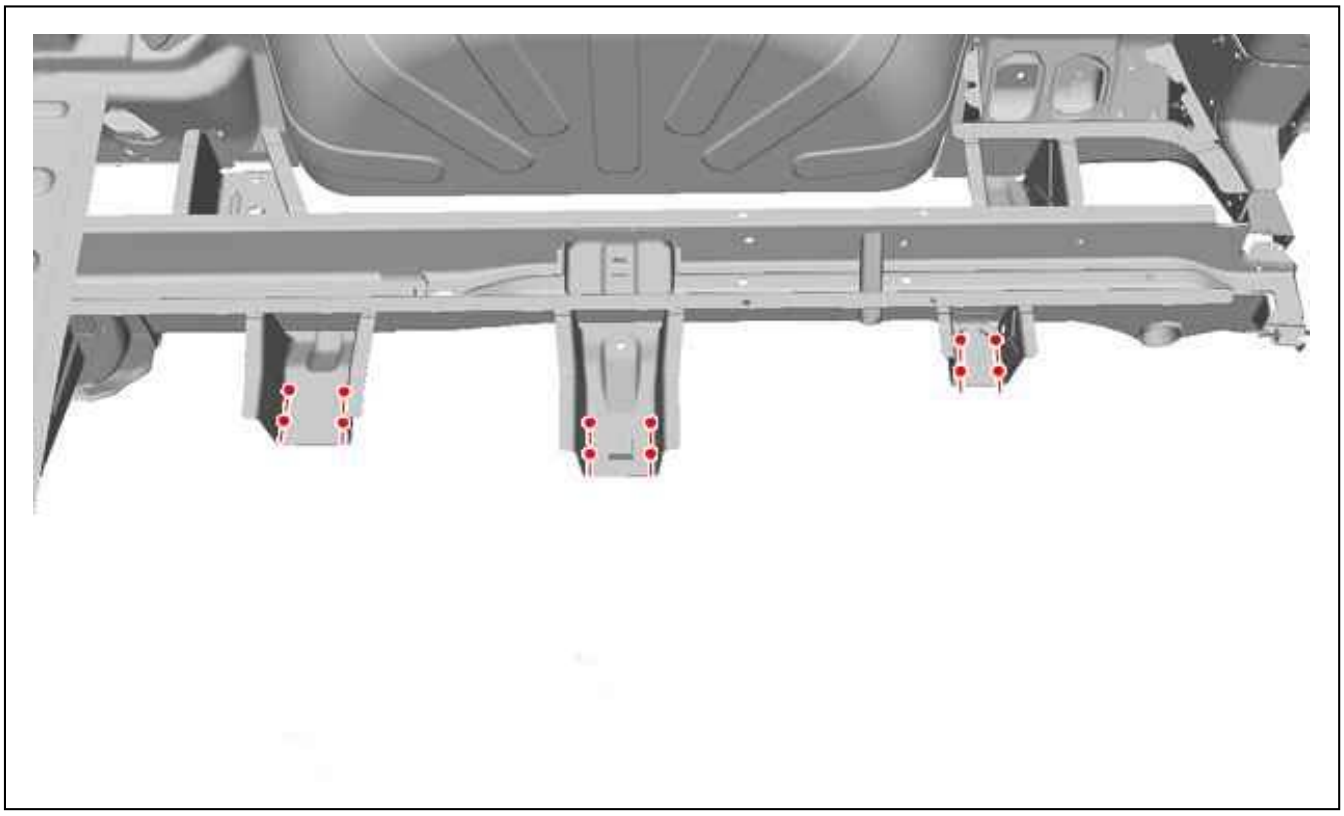

Figure : C4CP1ZUD

Figure 11.
Prepare the mating edges .
Align the mating edges and protect them with a weldable primer.

7. Adjustment

Present the elements, allowing for adjustment.
Check the fits and clearances (see the relevant operation).
Use the approved checking and measuring equipment ..

8. Welding

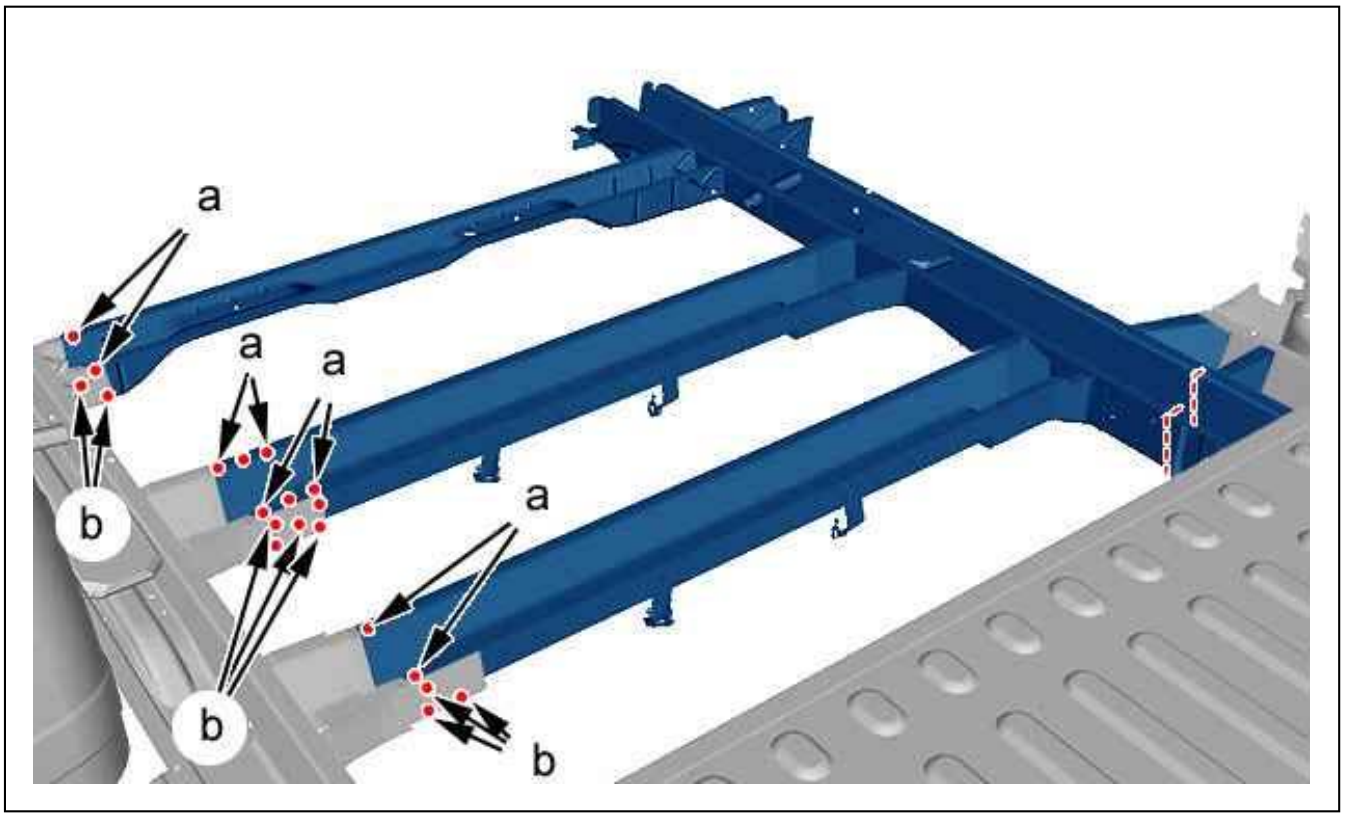

Figure : C4BP1UFD

Figure 12.
Weld using successive beads (MIG or MAG).
Grind the welds.
Weld with MIG or MAG spot welds (at "b").
Grind the spot welds.
Weld with electric spot welds (at "a").

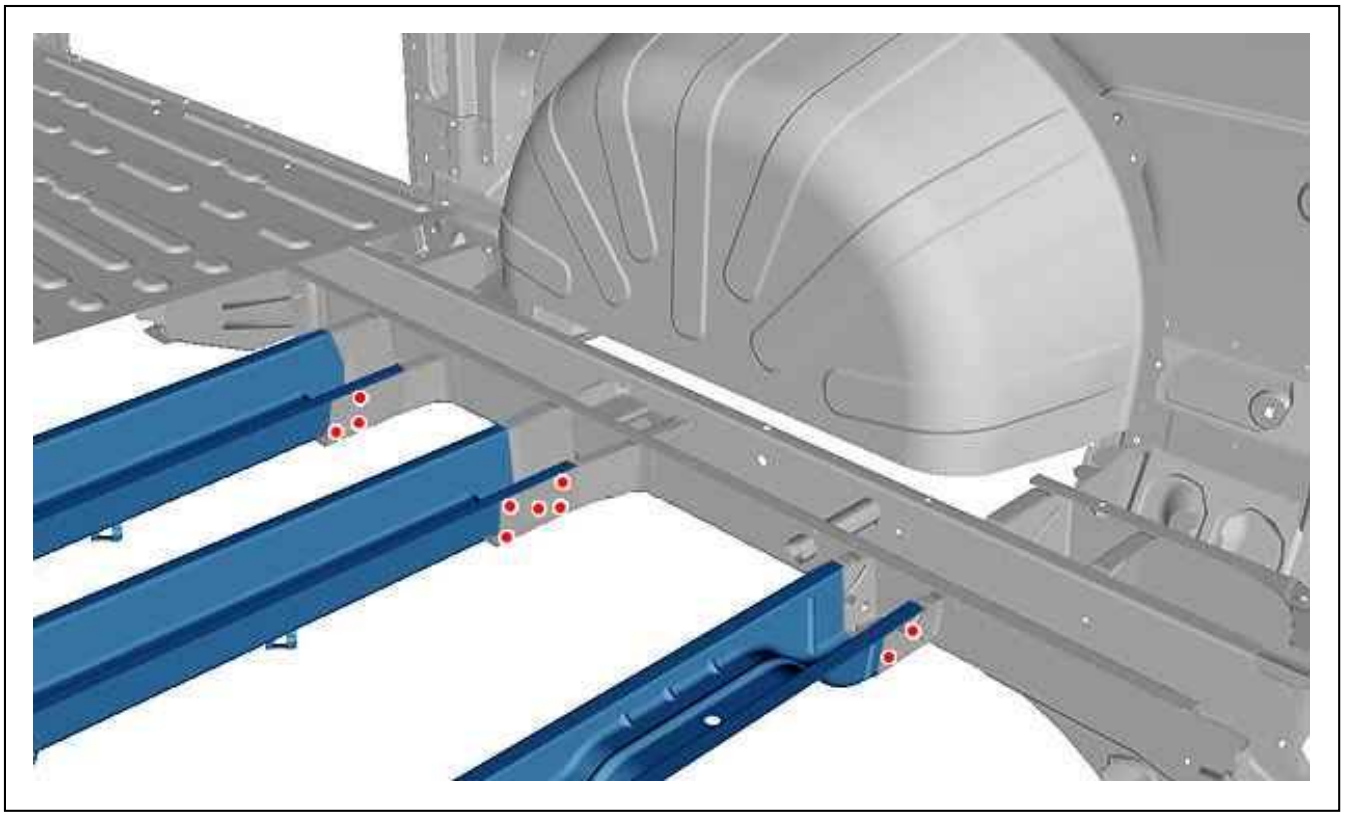

Figure : C4CP1ZVD

Figure 13.
Weld with MIG or MAG spot welds.
Grind the spot welds.

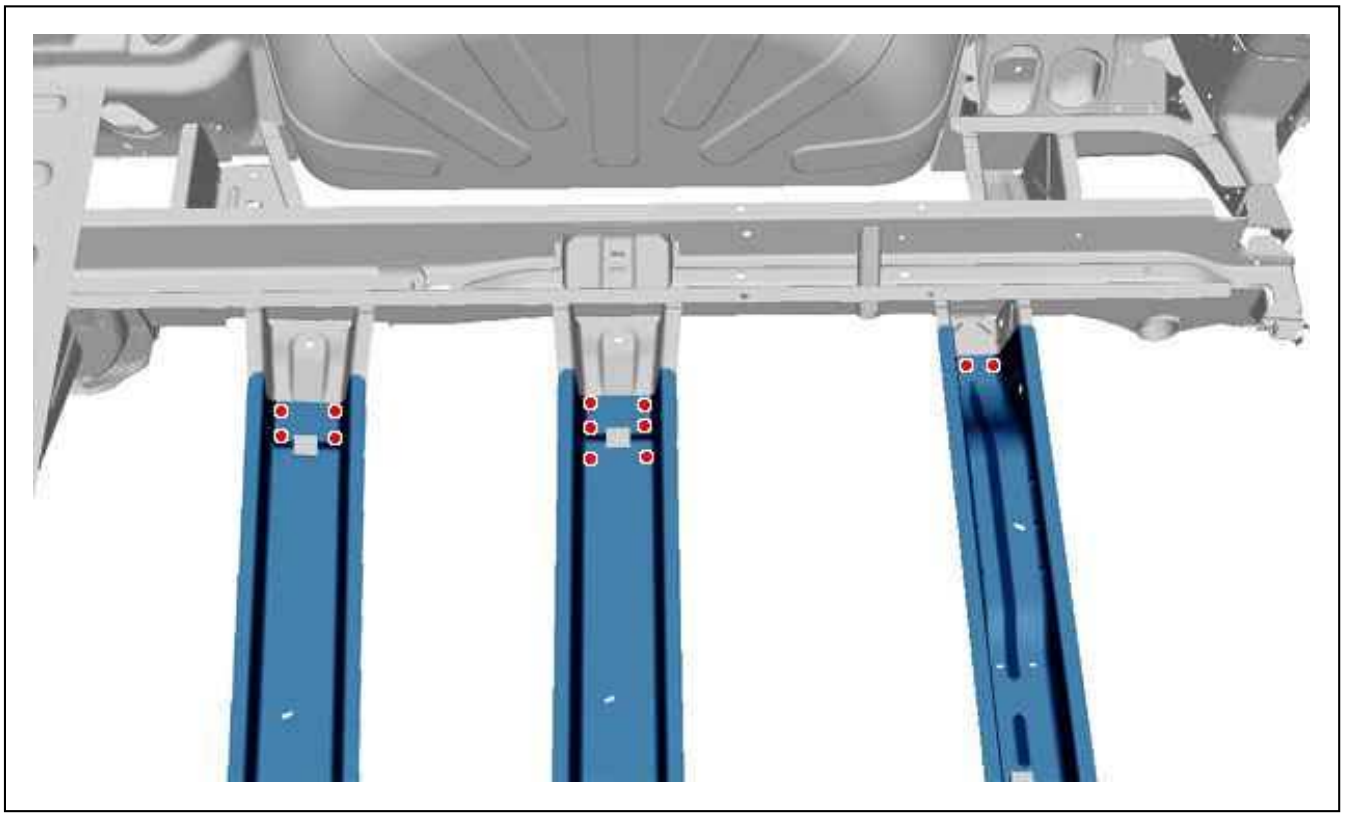

Figure : C4CP1ZWD

Figure 14.
Weld with electric spot welds.

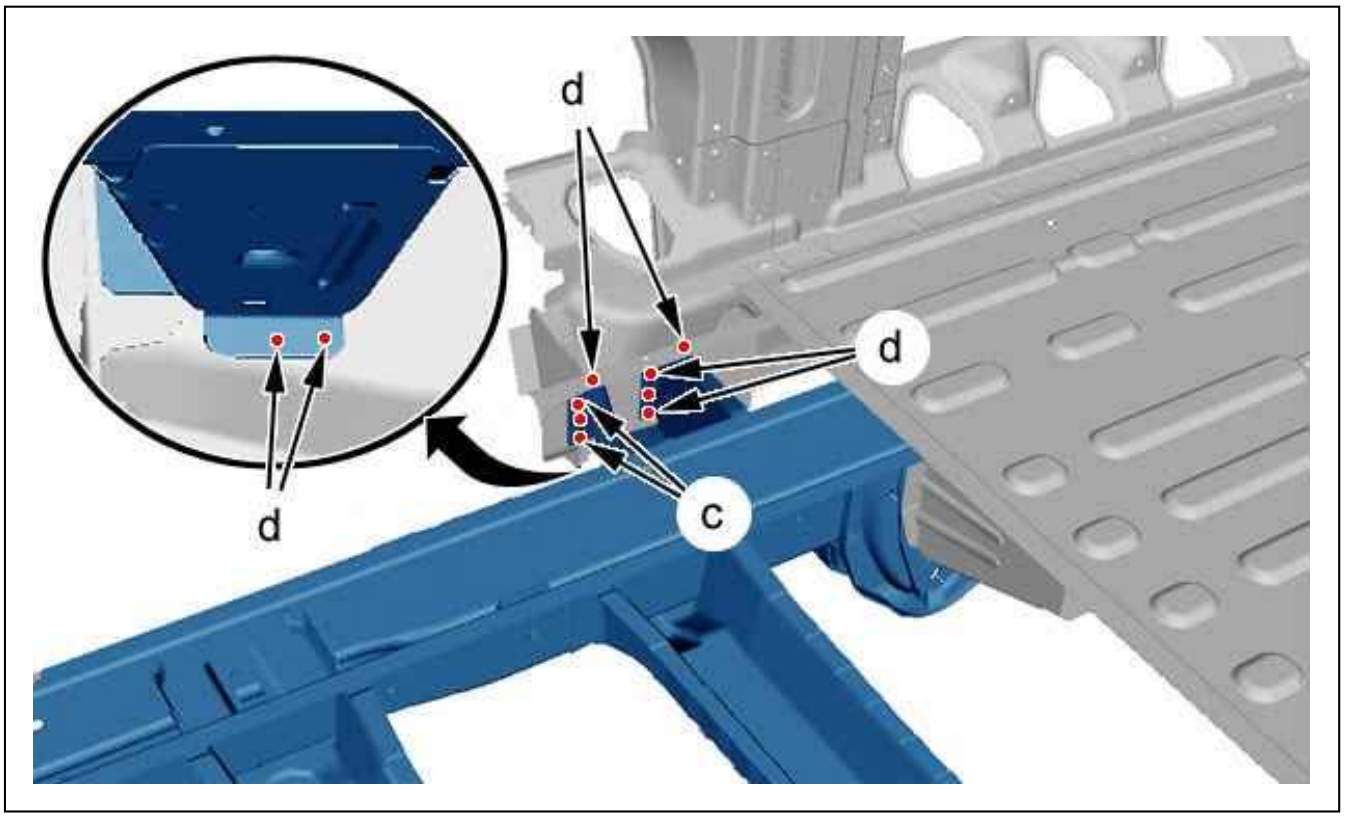

Figure : C4BP1UGD

Figure 15.
Weld with MIG or MAG spot welds (at "d").
Grind the spot welds.
Weld with electric spot welds (at "c").

9. Protection

Paint then spray into the hollow sections, product index C5, in the repair zone (see the relevant operation).
Apply an anti-chip layer (see the relevant operation).

10. Reinitialisation

Reconnect the battery.

ESSENTIAL : Perform the operations to be carried out following reconnection of the battery.

REMOVING - REFITTING : REAR DOOR

1. Recommended tools

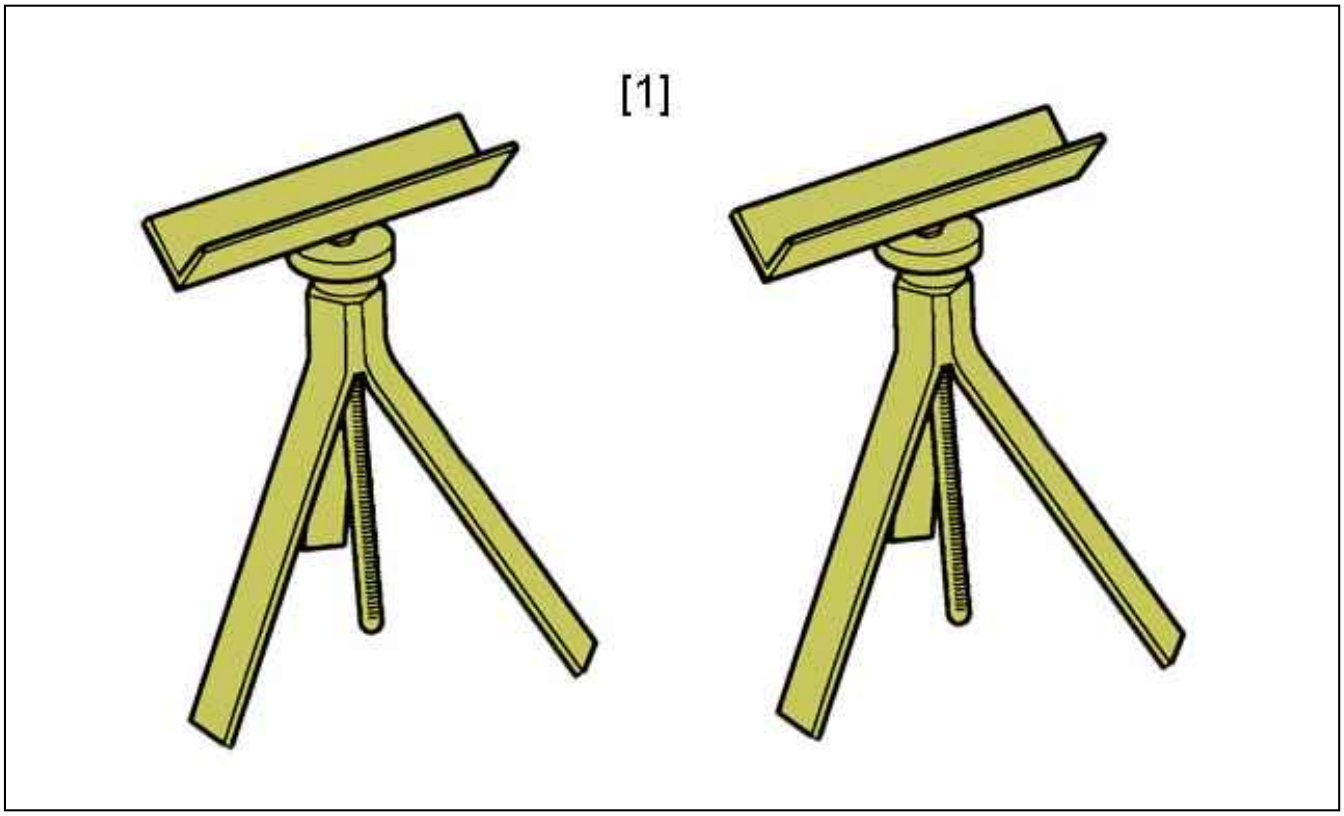

Figure : E5AP2WMD

[1] set of door support stands 0207-T.

2. Removing

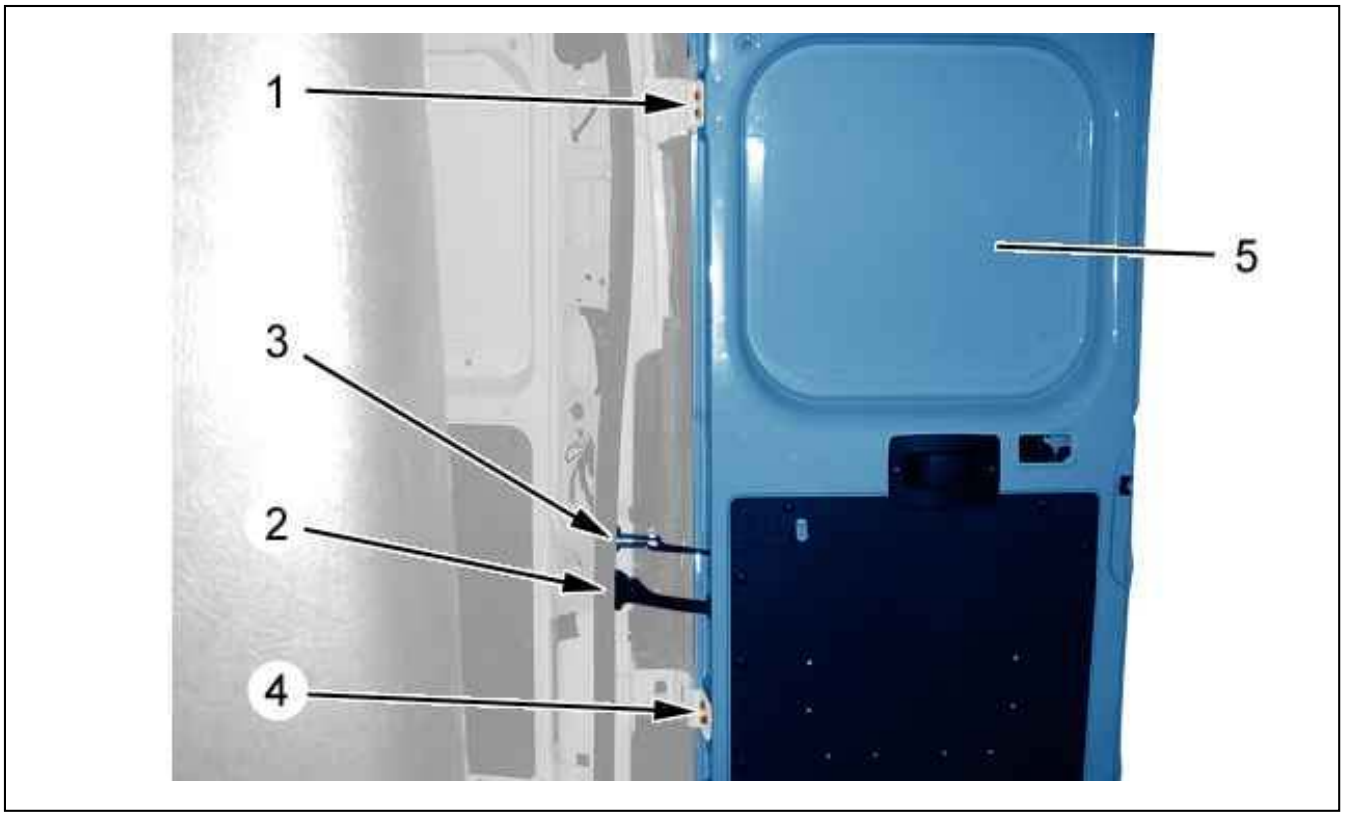

Figure : C4BP1P3D

Support the door (5) ; Using the stands.
Remove the bolts (1), (2), (3), (4).

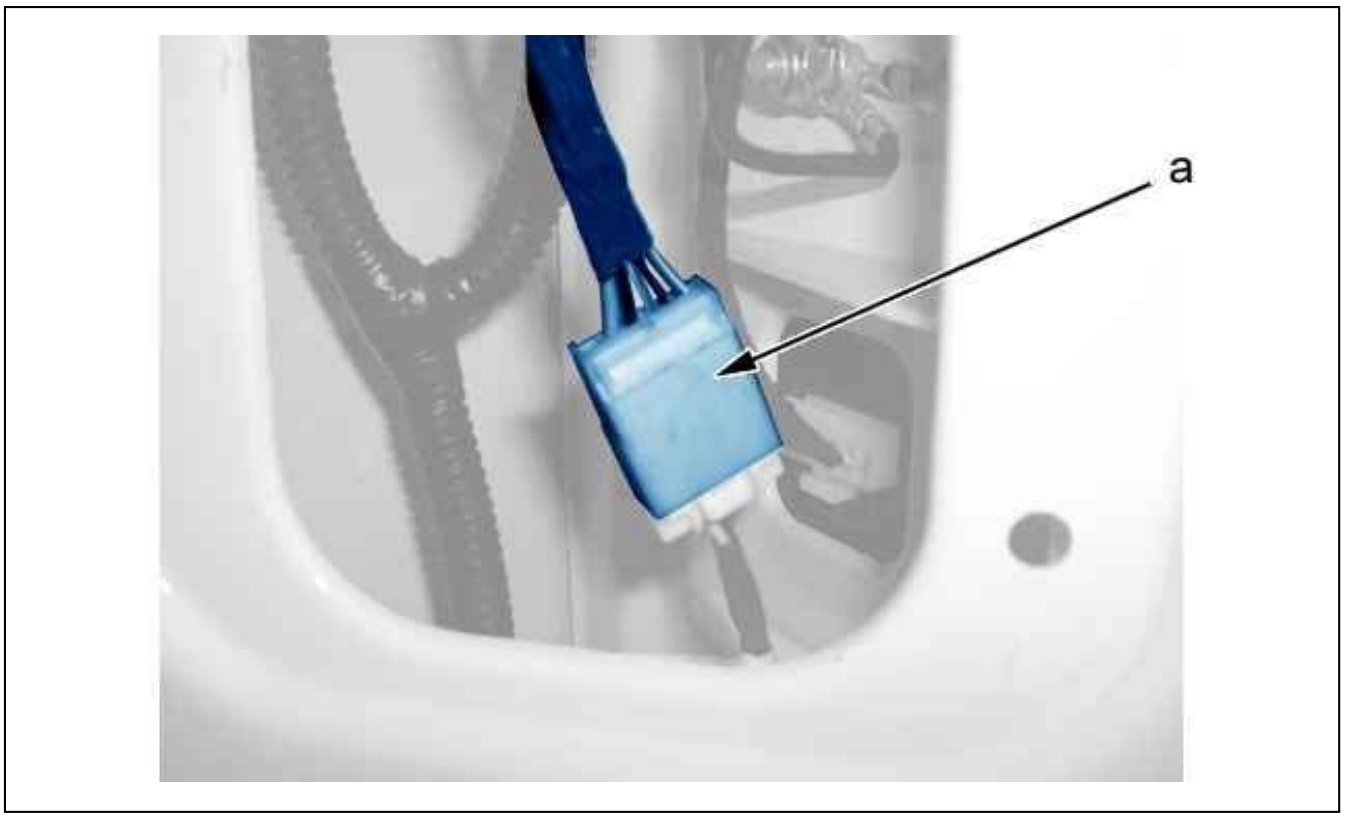

Figure : C4CP1PXD

Disconnect the connector (at "a").

ESSENTIAL : Two people are required to perform the following operation.

Remove the door (5).

3. Refitting

Proceed in the reverse order to removal.
Check the electric operation.
Tighten :

- The bolts (1), (4) to 2,5 ± 0,2 daN.m
- The bolts (2), (3) to 0,8 ± 0,08 daN.m

4. Adjustments

Fit and clearance values (see the relevant operation).

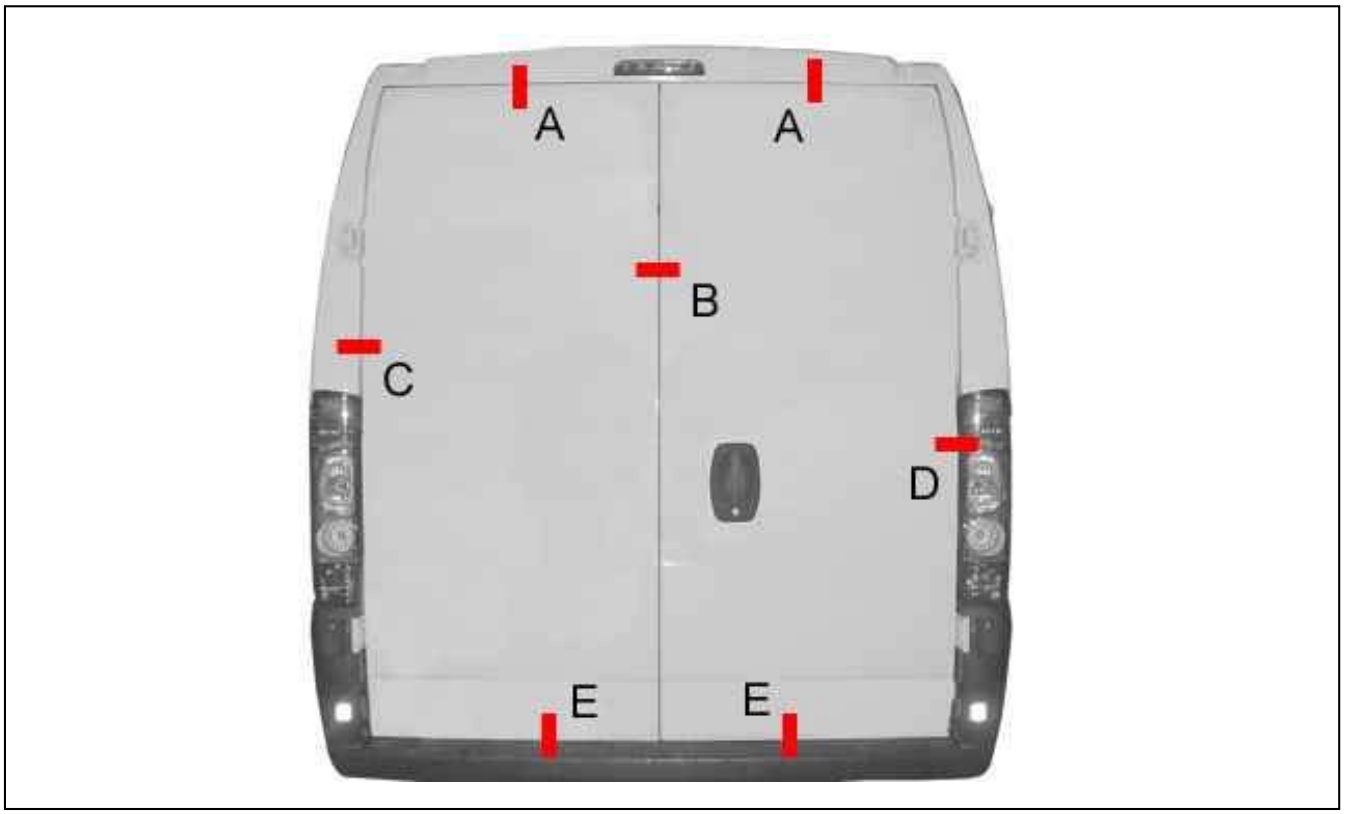

Figure : C4BP1P4D

A : Upper adjustment of the doors.
B, C, D : Adjustment of the doors.
E : Lower adjustment of the doors.

4.1. Upper adjustment of the doors (at "a")

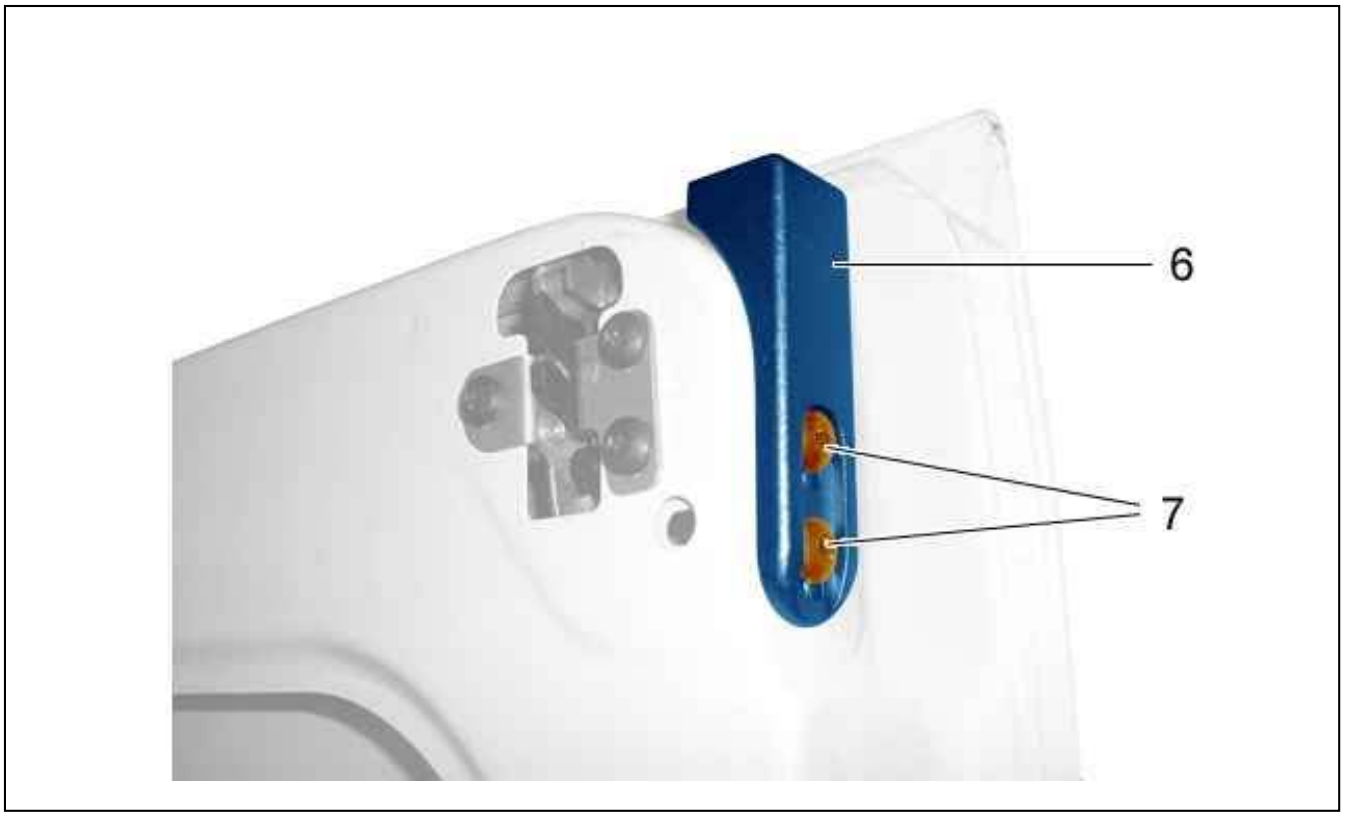

Figure : C4BP1P5D

Slacken the screws (7) one 1/4th of a turn.
Position the upper stops (6) to adjust the clearance of the doors.
Tighten the bolts (7).

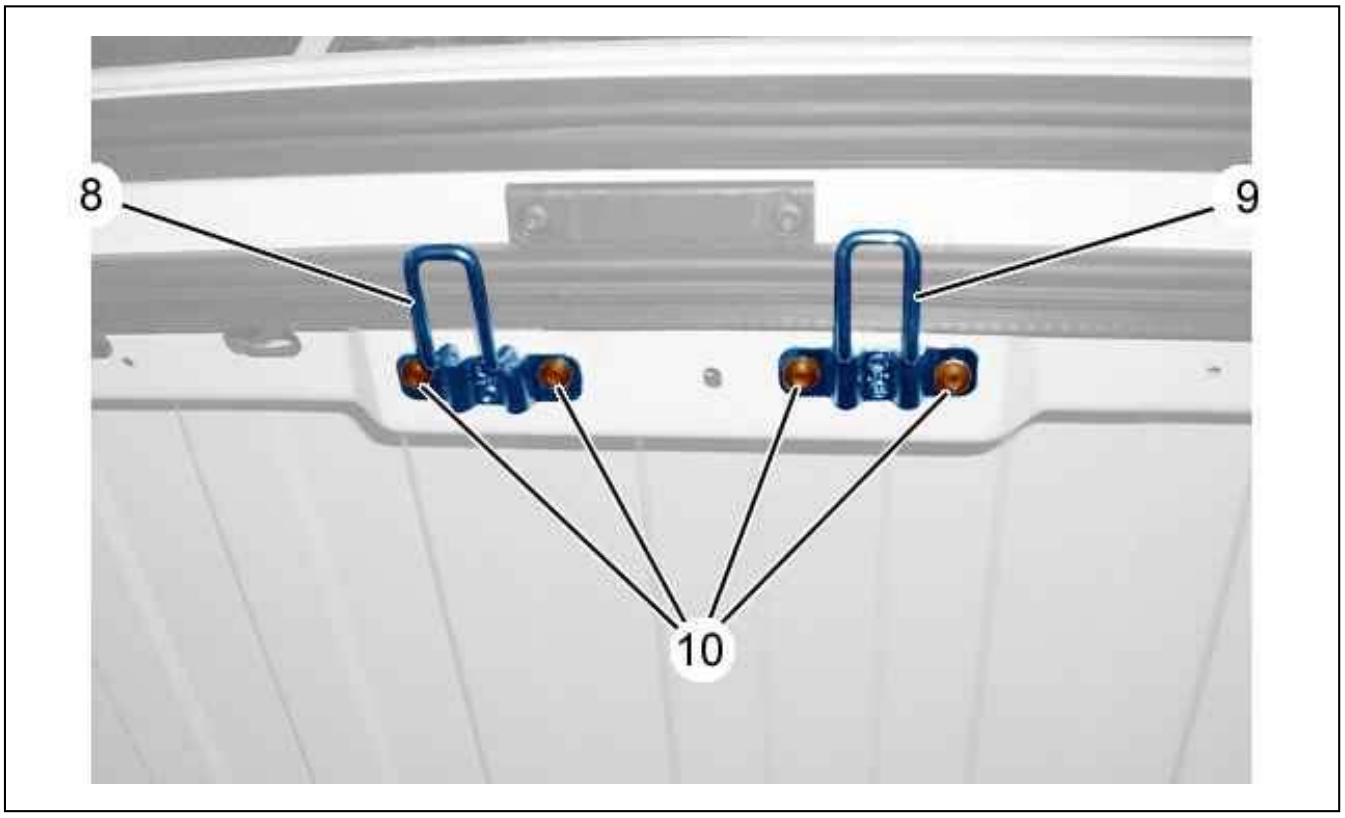

Figure : C4BP1P6D

Slacken the screws (10) one 1/4th of a turn.
Position the strikers (8), (9) to adjust the flush fitting of the doors.
Tighten the bolts (10).

4.2. Adjustment of the doors (at "b", "c" and "d")

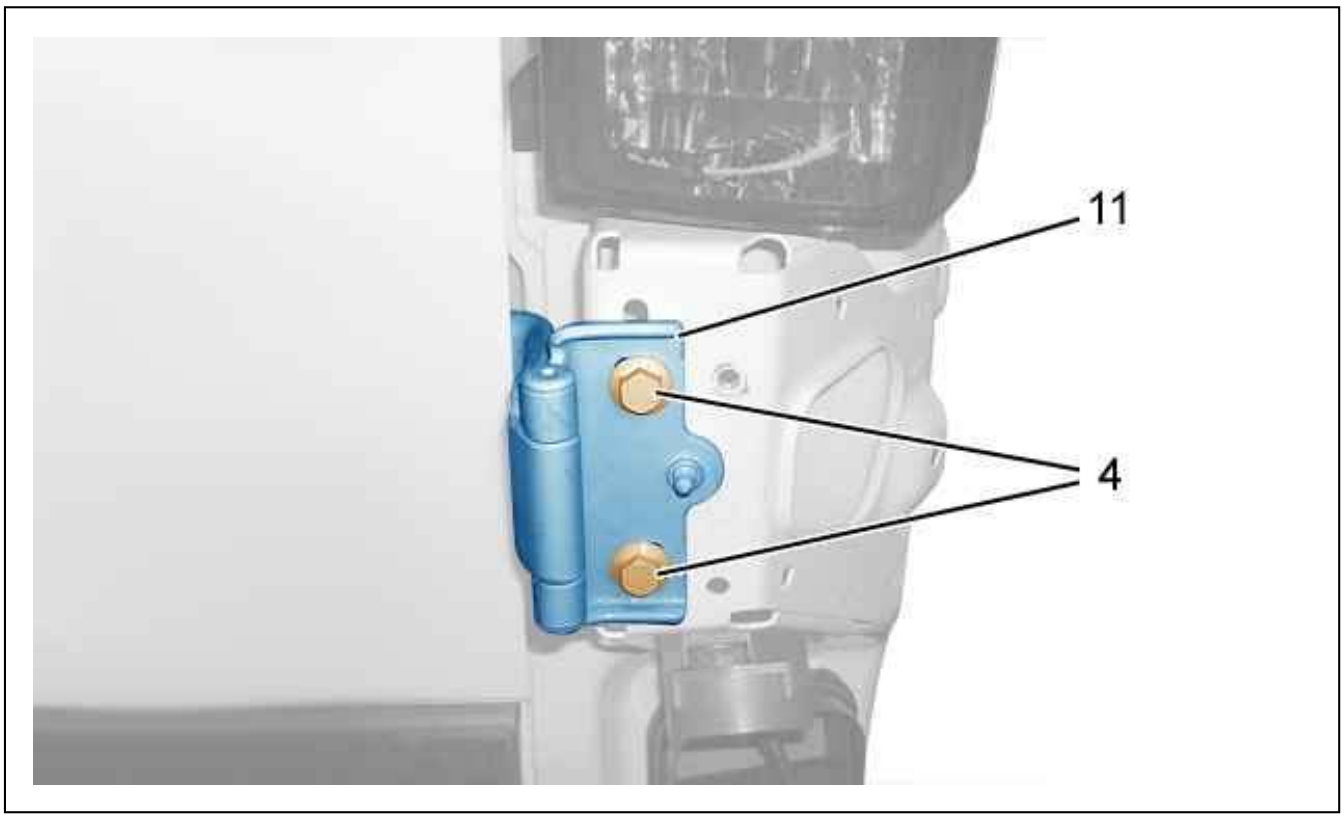

Figure : C4BP1P7D

Slacken the screws (4) one 1/4th of a turn.
Position the hinges (11) to adjust the clearance of the doors.
Tighten the bolts (4) to 2,5 ± 0,2 daN.m.

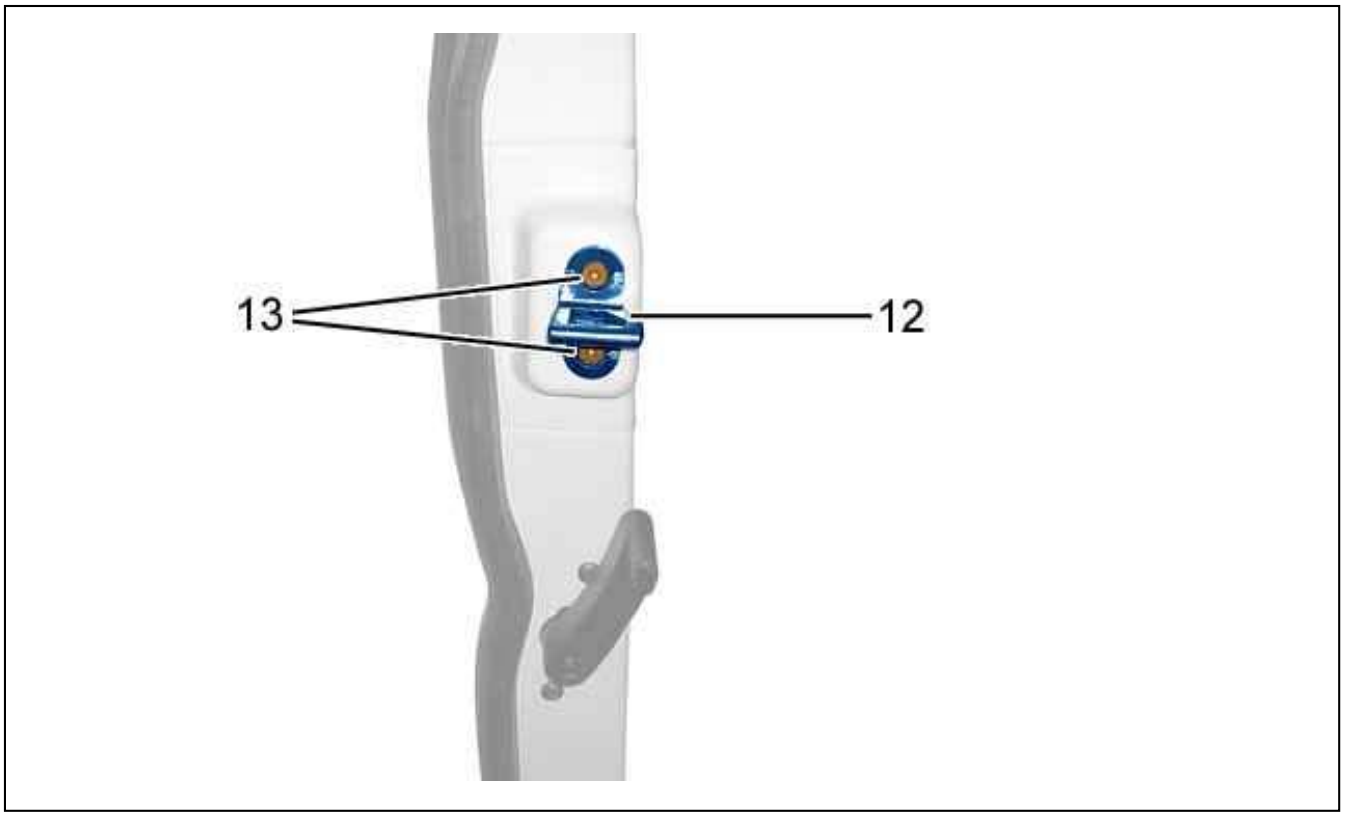

Figure : C4BP1P8D

Slacken the screws (13) one 1/4th of a turn.
Position the striker (12) to adjust the flush fitting of the doors.
Tighten the bolts (13).

4.3. Lower adjustment of the doors (at "e")

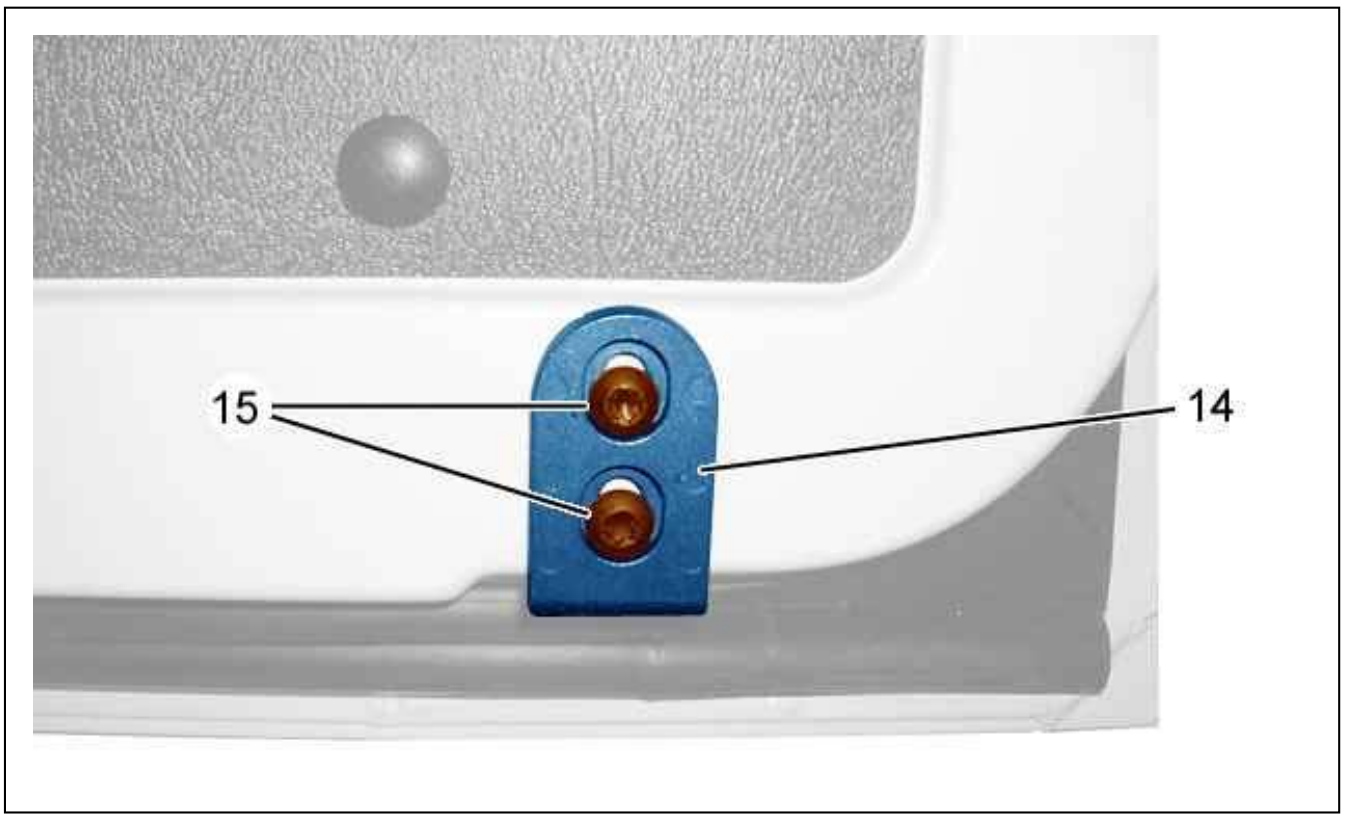

Figure : C4BP1P9D

Slacken the screws (15) one 1/4th of a turn.
Position the lower stops (14) to adjust the clearance of the doors.
Tighten the bolts (15).

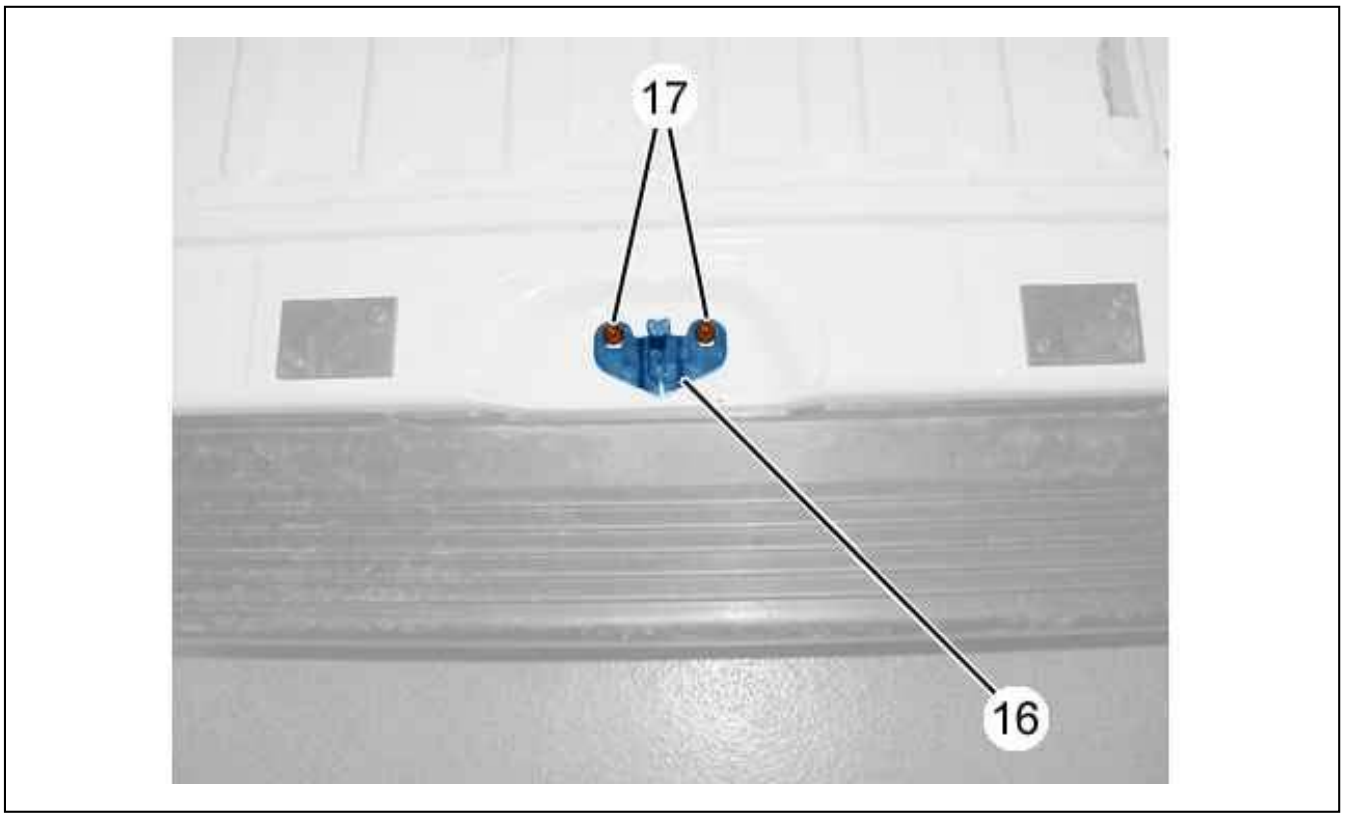

Figure : C4BP1PAD

Slacken the screws (17) one 1/4th of a turn.
Position the lower striker (16) to adjust the flush fitting of the doors.
Tighten the bolts (17).

REMOVING - REFITTING : REAR DOOR HINGES

ESSENTIAL : Observe the safety and cleanliness recommendations .

1. Removing

Remove :

- The rear bumper (see the relevant operation)
- The rear door (see the relevant operation)

1.1. Top hinge

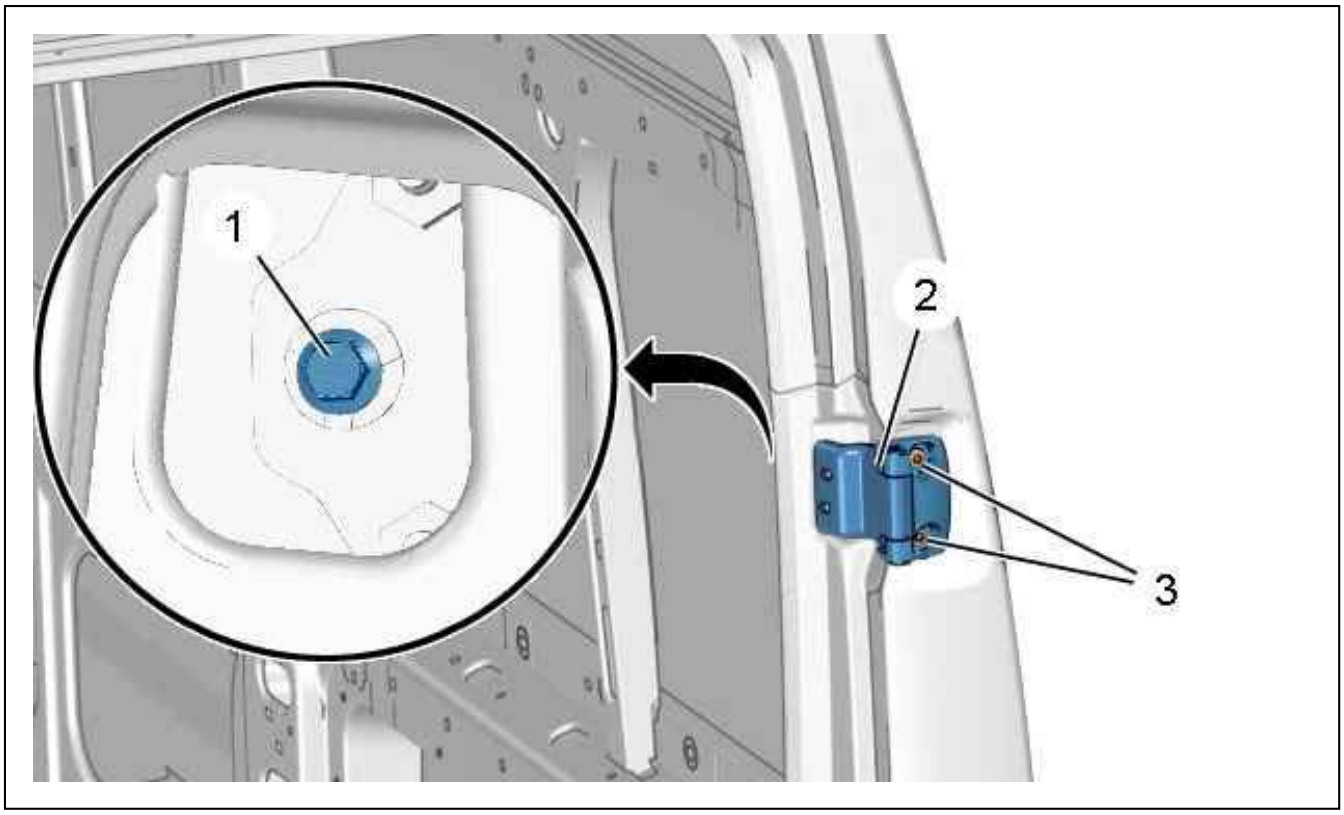

Figure : C4BG01TD

Remove :

- The (1) bolt (Through the interior of the vehicle)
- The bolts (3)
- The upper hinge (2) (Rear door)

1.2. Bottom hinge

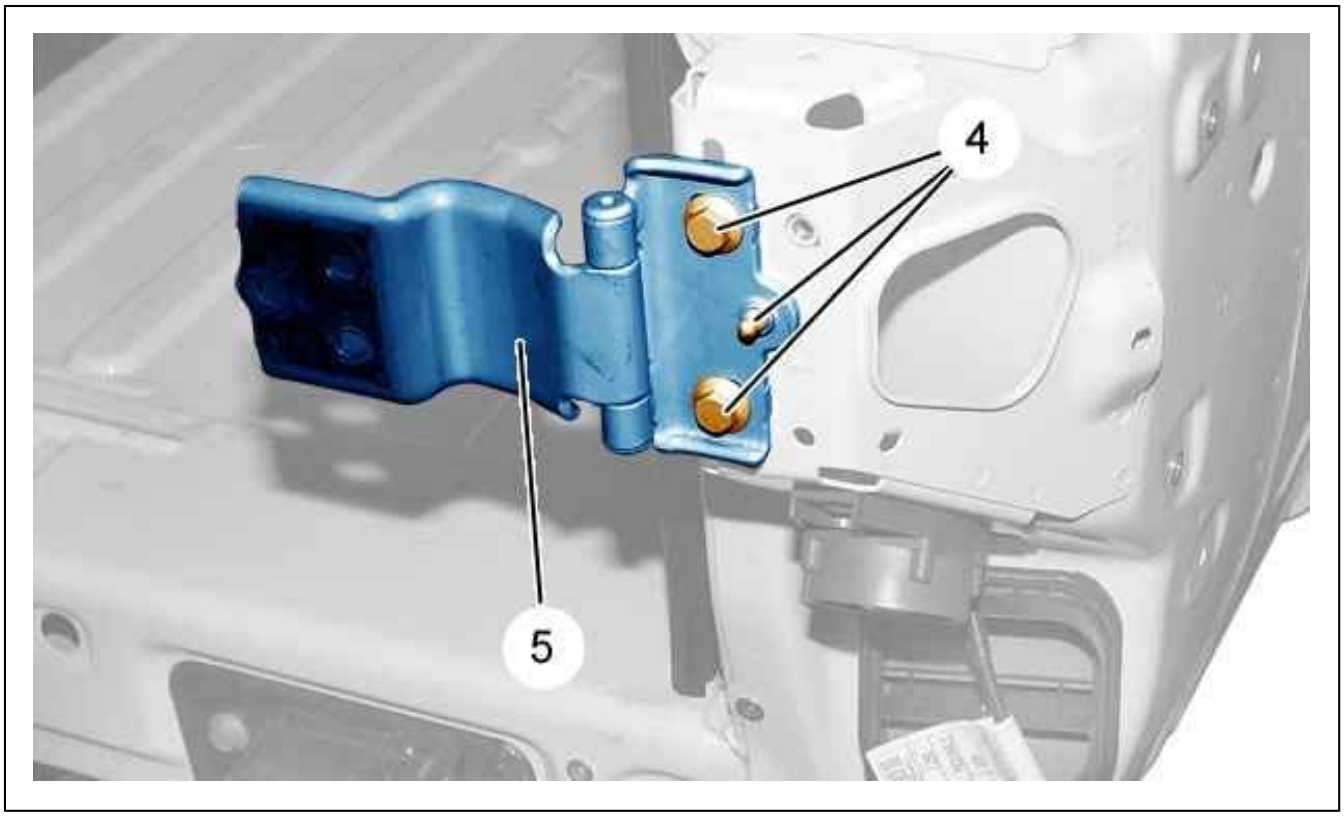

Figure : C4BG01UD

Remove :

- The bolts (4)
- The lower hinge (5) (Rear door)

2. Refitting

Proceed in the reverse order to removal.

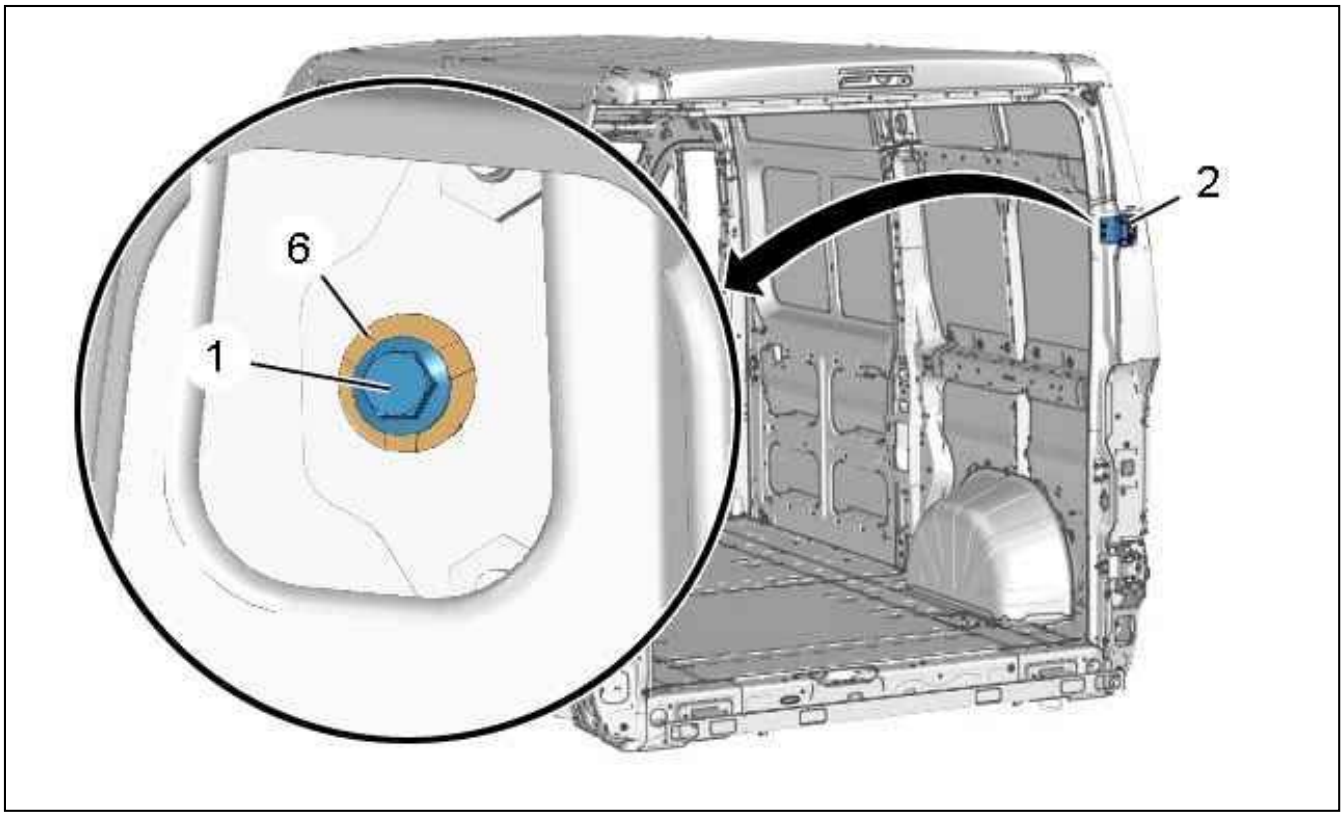

Figure : C4BG01VD

ESSENTIAL : Check that the sealing washer (6) is present.

Tighten the bolts to (1), (3), (4) m.daN .
Adjust the fits and clearances of the hinged rear doors (see the relevant operation).

REPLACEMENT : REAR PILLAR UPPER BRACKET

ESSENTIAL : All of the stripped surfaces must be protected by means of the approved electrolytic rezincing process (see the relevant operation).

ESSENTIAL : Observe the elementary rules of hygiene and safety (wear a face mask to protect against fumes and vapour - work in a well ventilated space).

1. Additional operations

Disconnect the battery.
Replace the rear pillar upper bracket and the partial rear pillar inner panel (see the relevant operation).
Release the wiring harnesses.

2. Identification of the replacement parts



Figure : C4CP1S6D

Figure 1.
Rear pillar upper bracket.

3. Replacement part preparation



Figure : C4CP1S7D

Figure 2.
Rear pillar upper bracket.
Mark out then drill 8 mm holes for later plug welding (12 holes).
Prepare the mating edges .

4. Cutting out

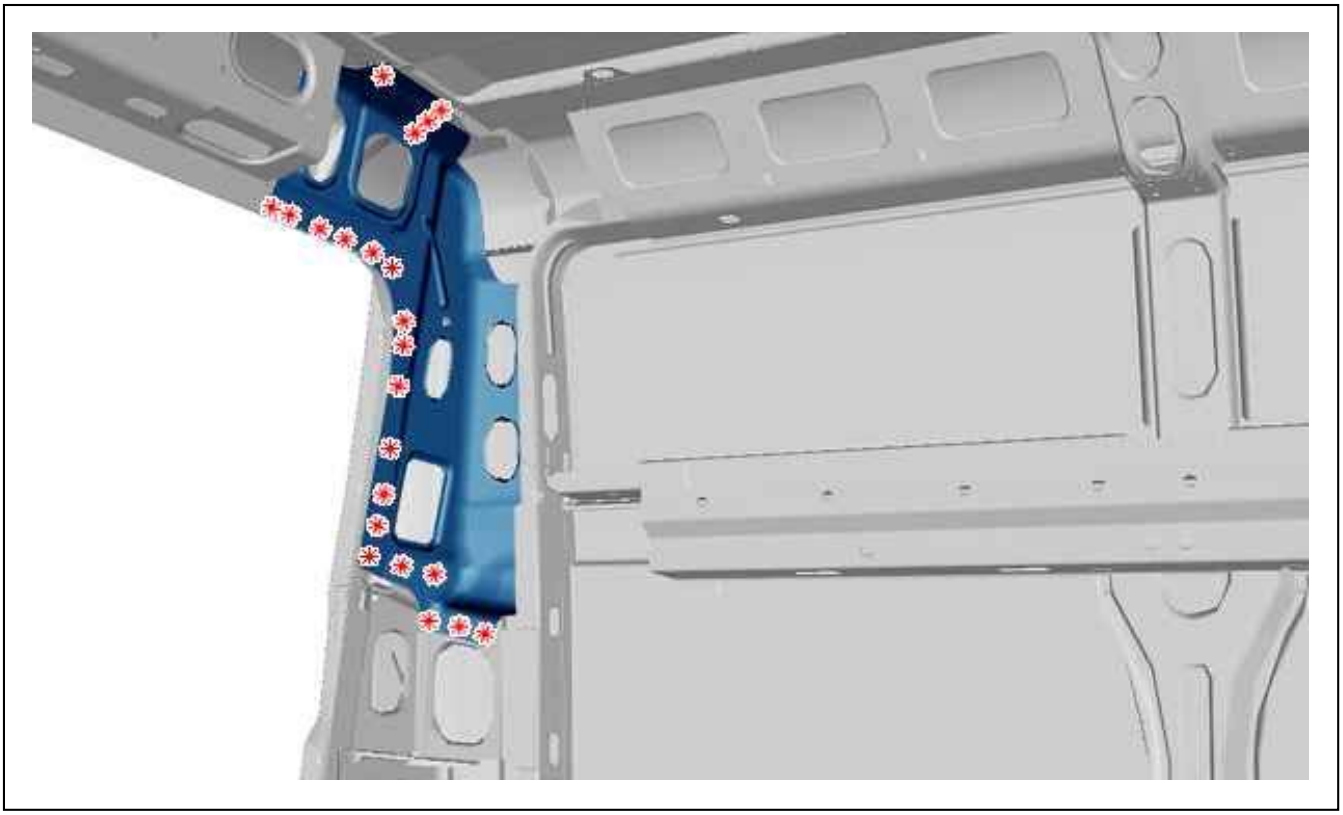

Figure : C4CP1S8D

Figure 3.
Cut out the spot welds .

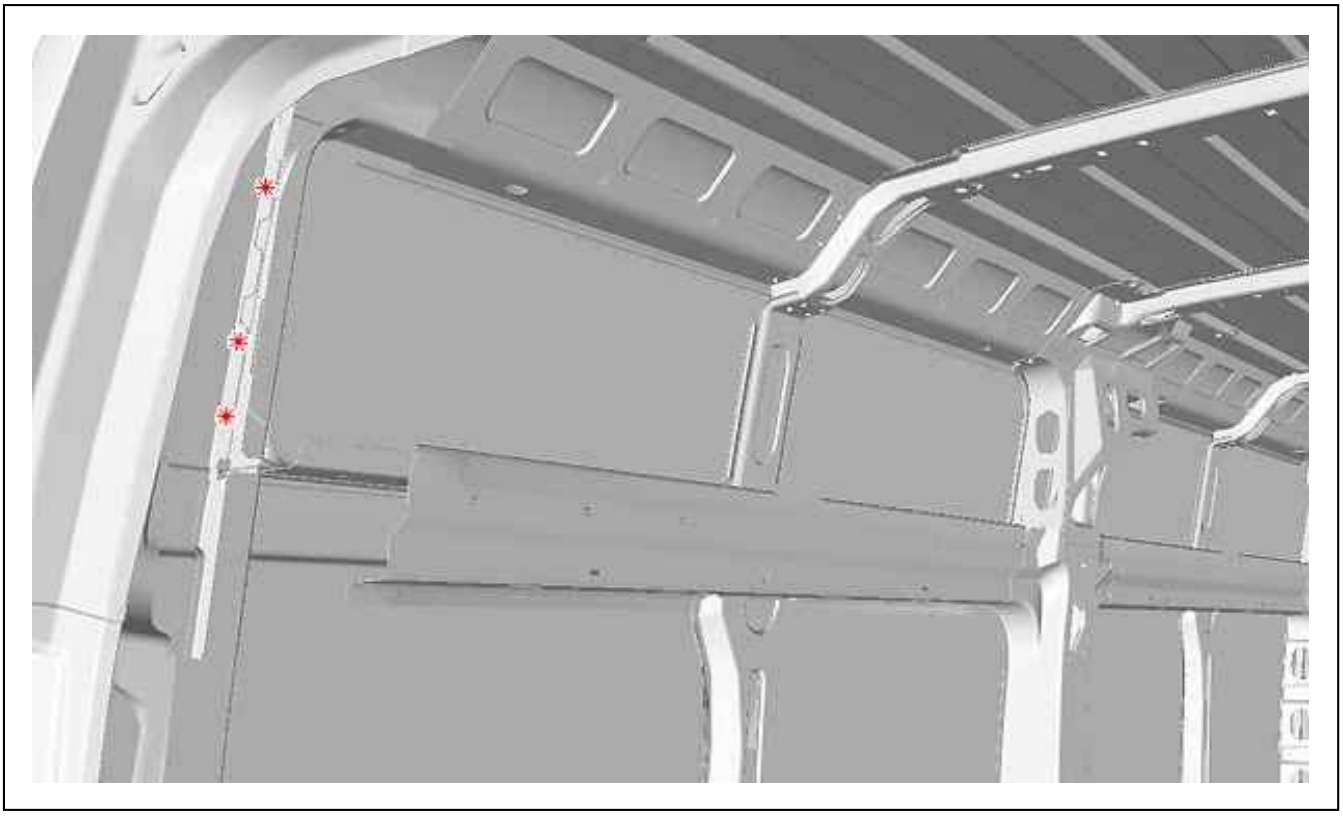

Figure : C4CP1S9D

Figure 4.

Cut out the spot welds .
Remove the rear pillar upper bracket.

5. Bodywork cleaning and preparation

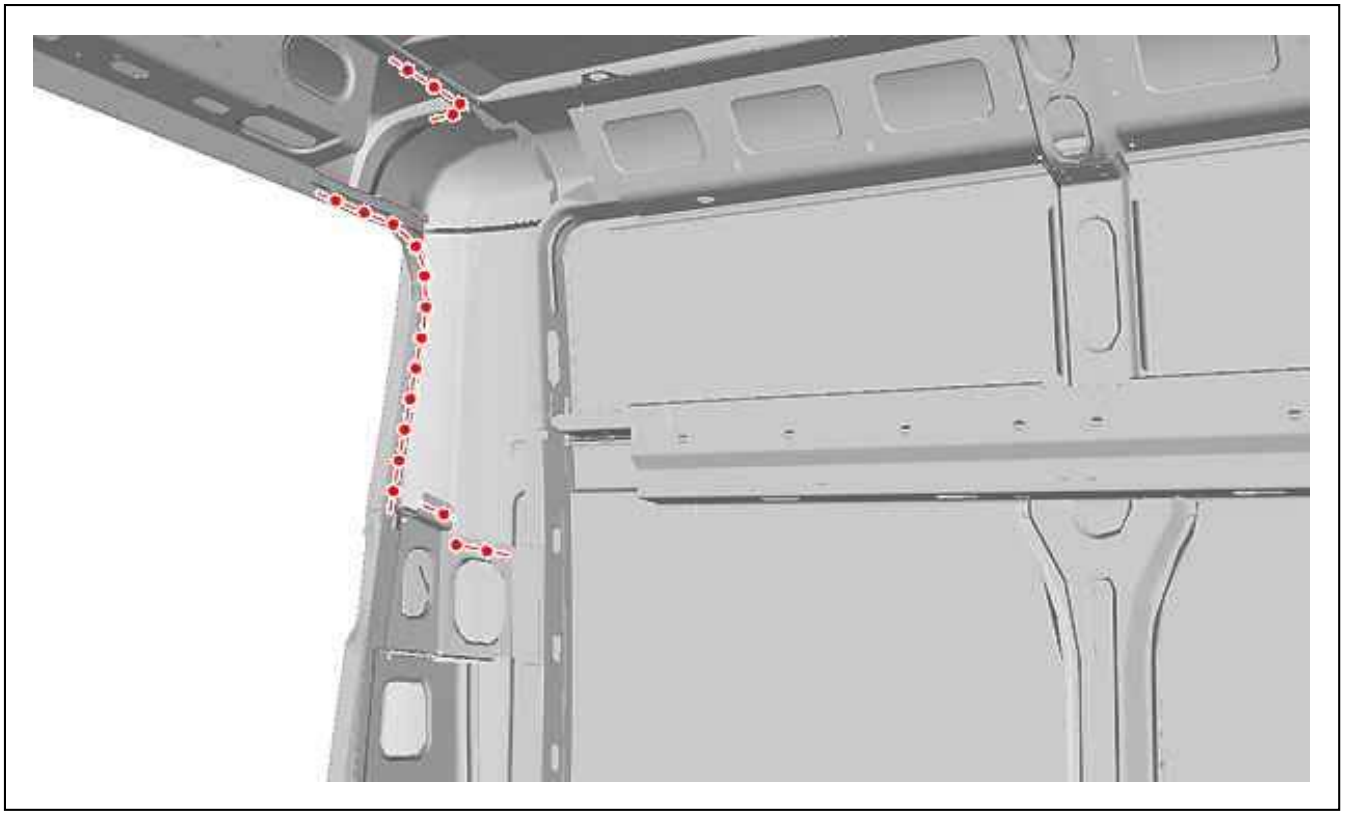

Figure : C4CP1SAD

Figure 5.
Prepare the mating edges .
Align the mating edges and protect them with a weldable primer.

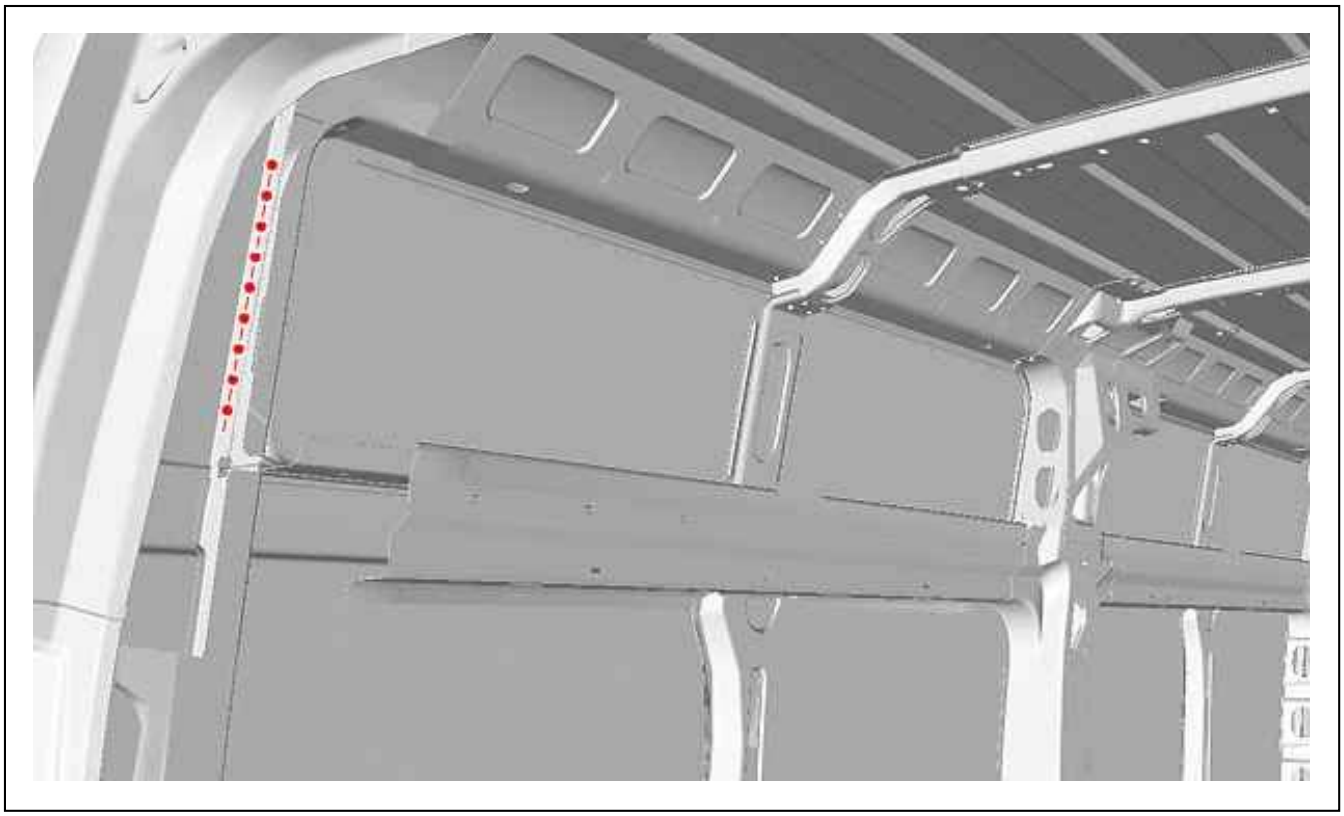

Figure : C4CP1SBD

Figure 6.
Prepare the mating edges .
Align the mating edges and protect them with a weldable primer.

6. Adjustment

Present the component for adjustment.
Check the fits and clearances (see the relevant operation).

7. Welding

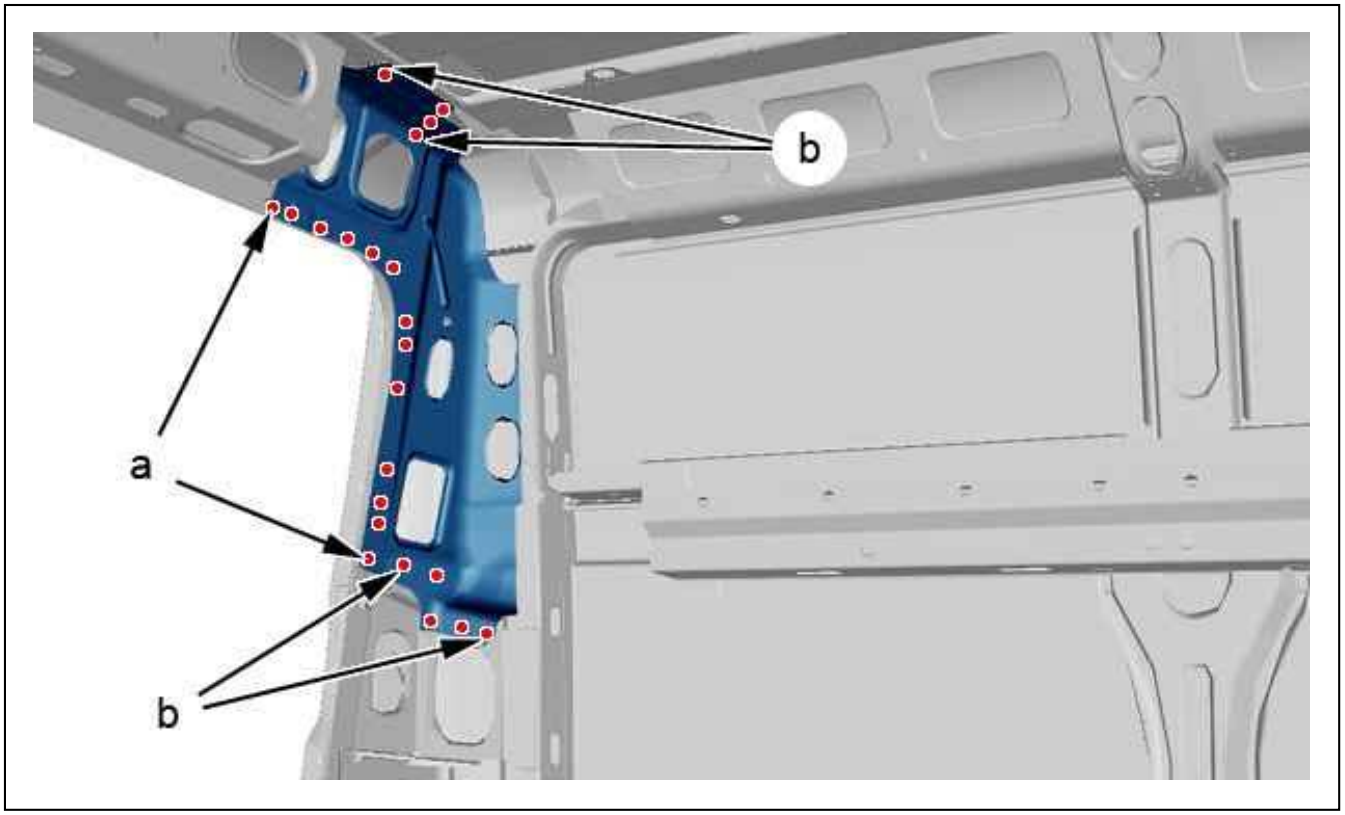

Figure : C4CP1SCD

Figure 7.
Weld with electric spot welds (at "a").
Weld with plug welds (MIG or MAG) (at "b").
Grind the spot welds.

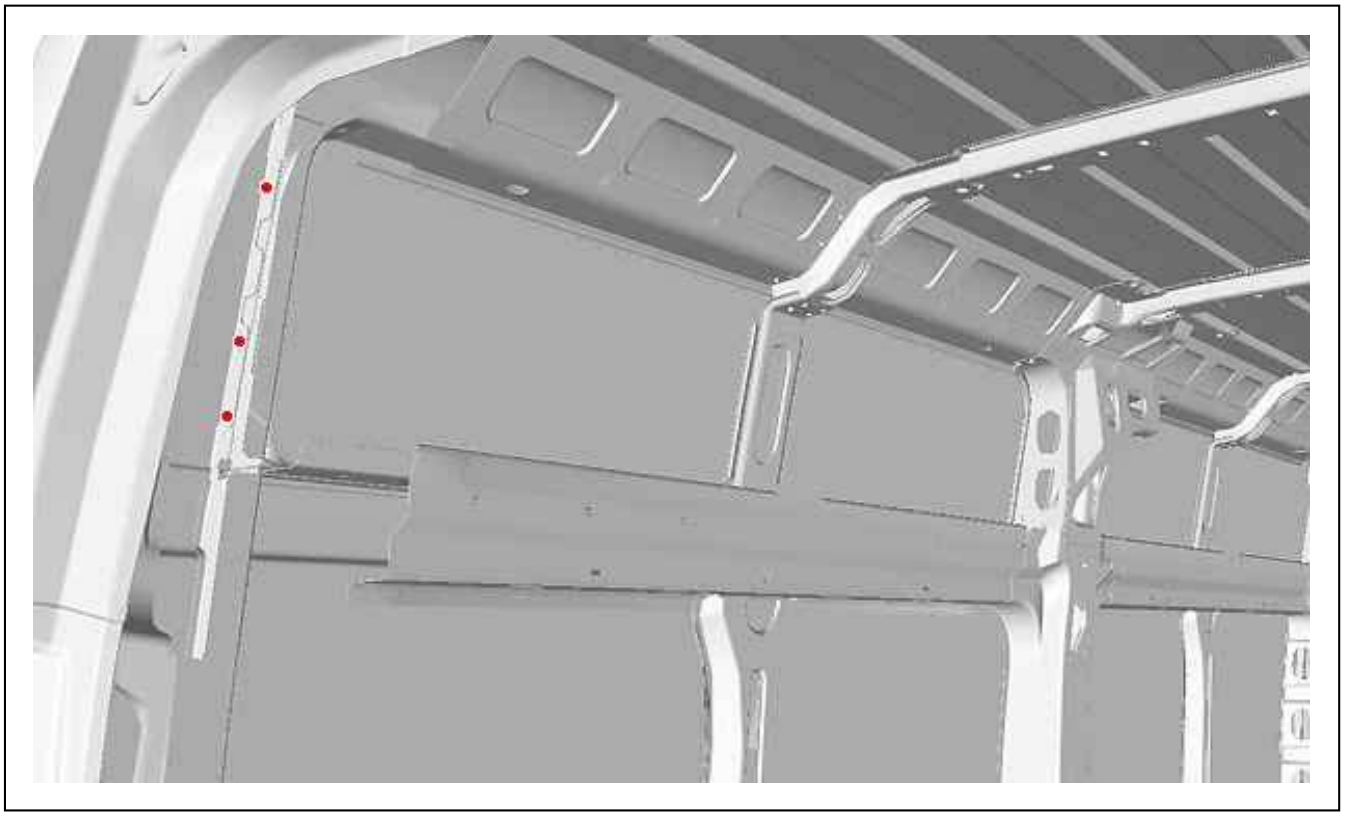

Figure : C4CP1SDD

Figure 8.
Weld with plug welds (MIG or MAG).
Grind the spot welds.

8. Protection

Paint then spray into the hollow sections, product index C5, in the repair zone (see the relevant operation).

9. Reinitialisation

Reconnect the battery.

ESSENTIAL : Perform the operations to be carried out following reconnection of the battery.

REPLACEMENT : LOWER REAR CORNER PANEL

ESSENTIAL : All of the stripped surfaces must be protected by means of the approved electrolytic rezincing process (see the relevant operation).

ESSENTIAL : Observe the elementary rules of hygiene and safety (wear a face mask to protect against fumes and vapour - work in a well ventilated space).

1. Additional operations

Disconnect the battery.
Replacement :

- Rear bumper
- Rear bumper crossmember

Removing - Refitting :

- Rear door
- Tail lamp

Release the wiring harnesses.

2. Identification of the replacement parts



Figure : C4BP1PYD

Figure 1.

Lower rear corner panel.

3. Replacement part preparation



Figure : C4BP1PZD

Figure 2.
Lower rear corner panel.
Mark then drill to Ø 8 mm for later plug welding (34 holes).
Prepare the mating edges .

4. Cutting out

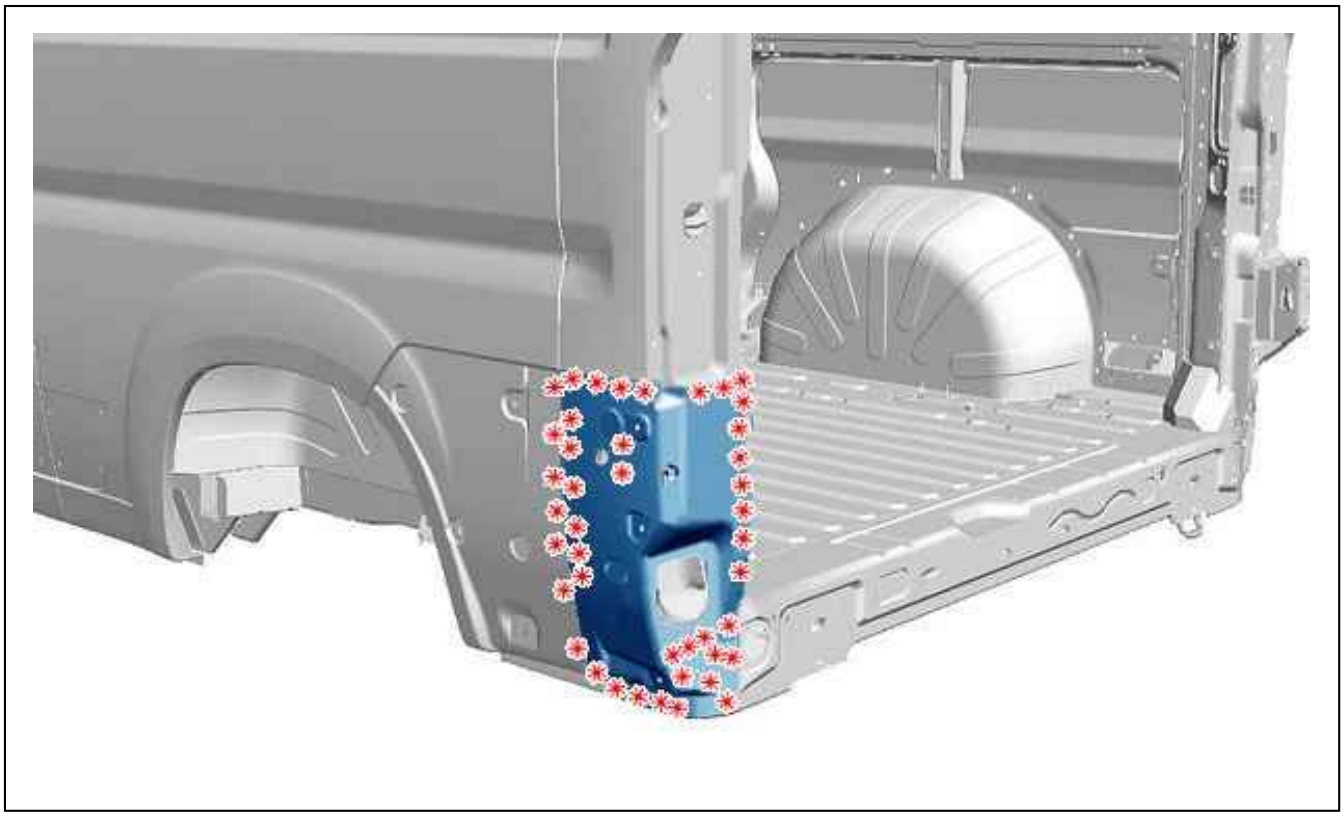

Figure : C4BP1Q0D

Figure 3.
Cut out the spot welds .
Remove the lower rear corner panel.

5. Bodywork cleaning and preparation

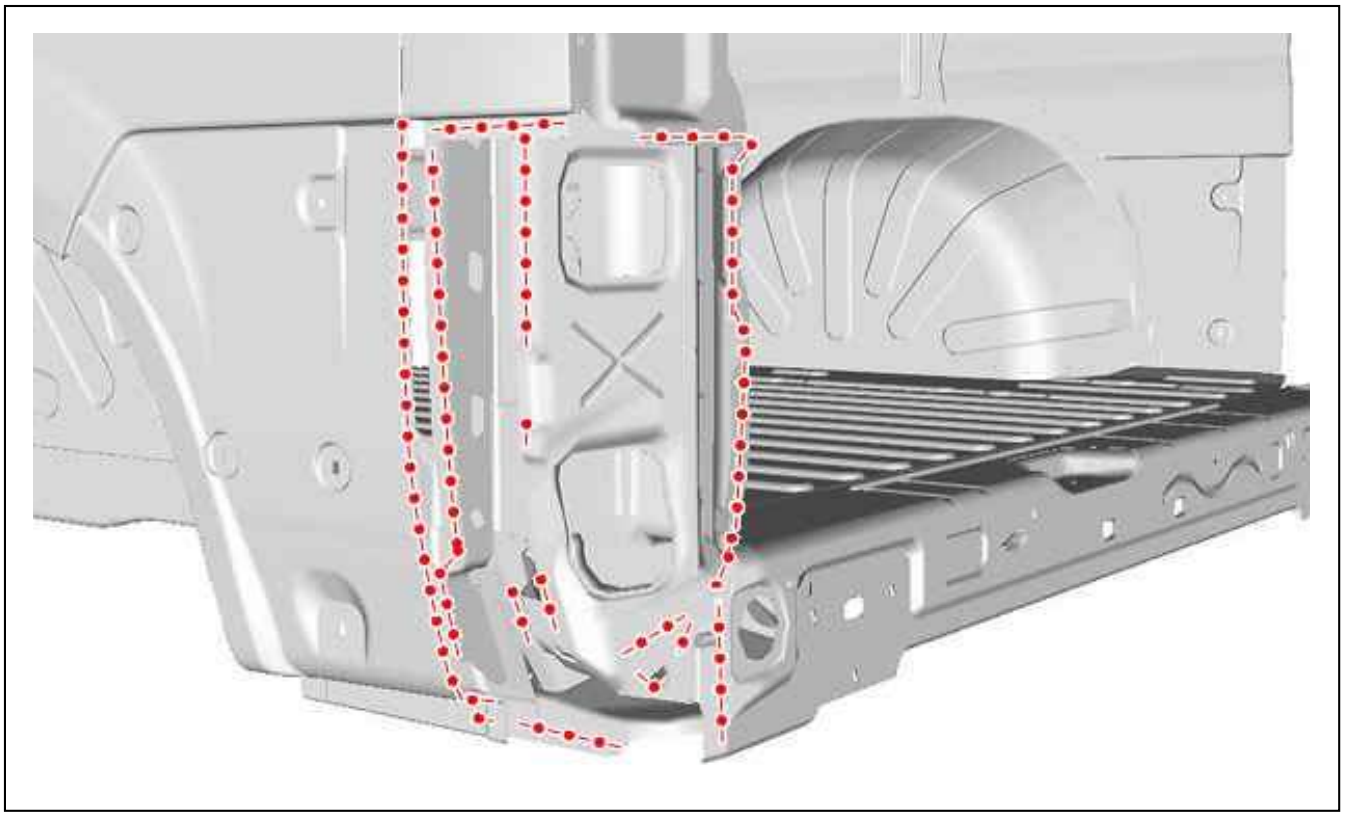

Figure : C4BP1Q1D

Figure 4.
Prepare the mating edges .
Align the mating edges and protect them with a weldable primer.

6. Adjustment

Present the component for adjustment.
Check the fits and clearances (see the relevant operation).

7. Welding

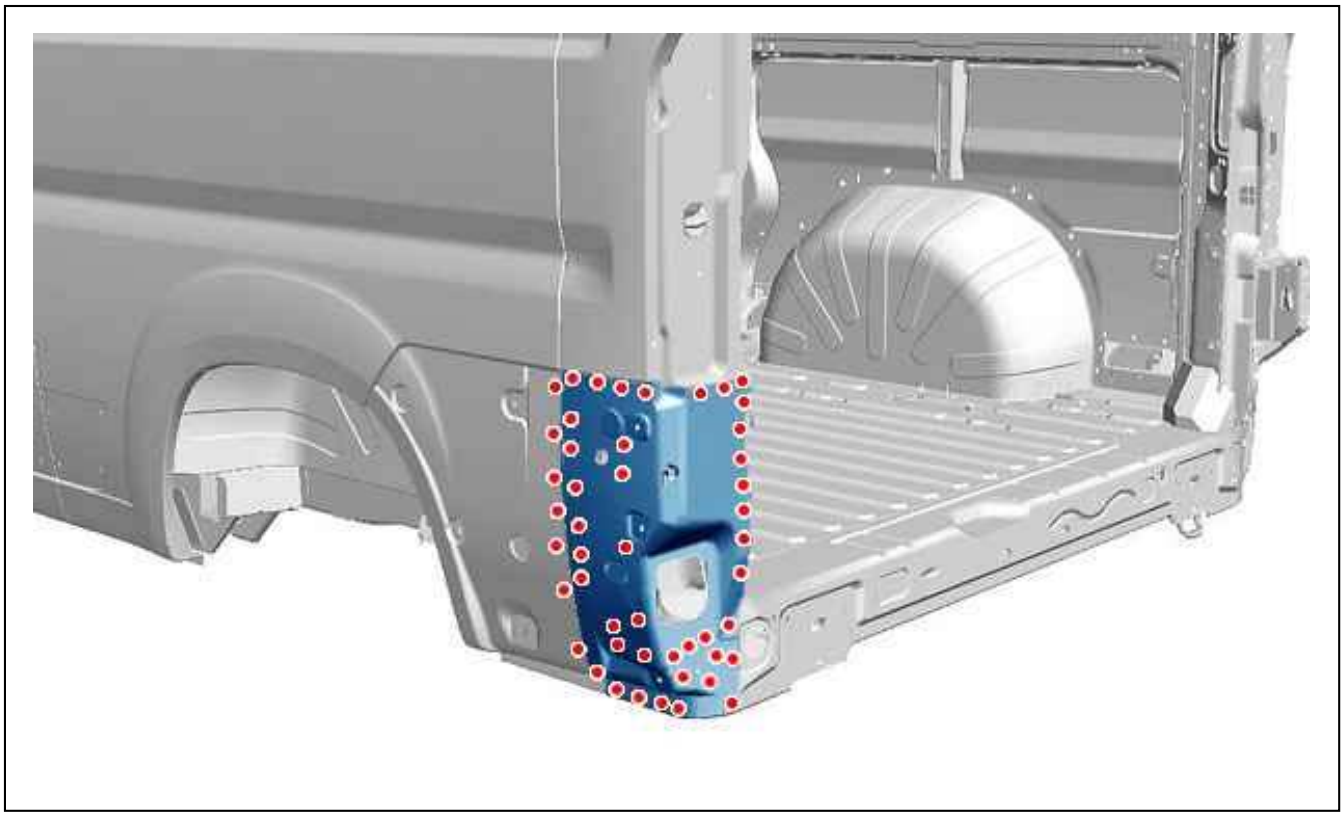

Figure : C4BP1Q2D

Figure 5.
Weld with MIG or MAG spot welds.
Grind the spot welds.

8. Sealing

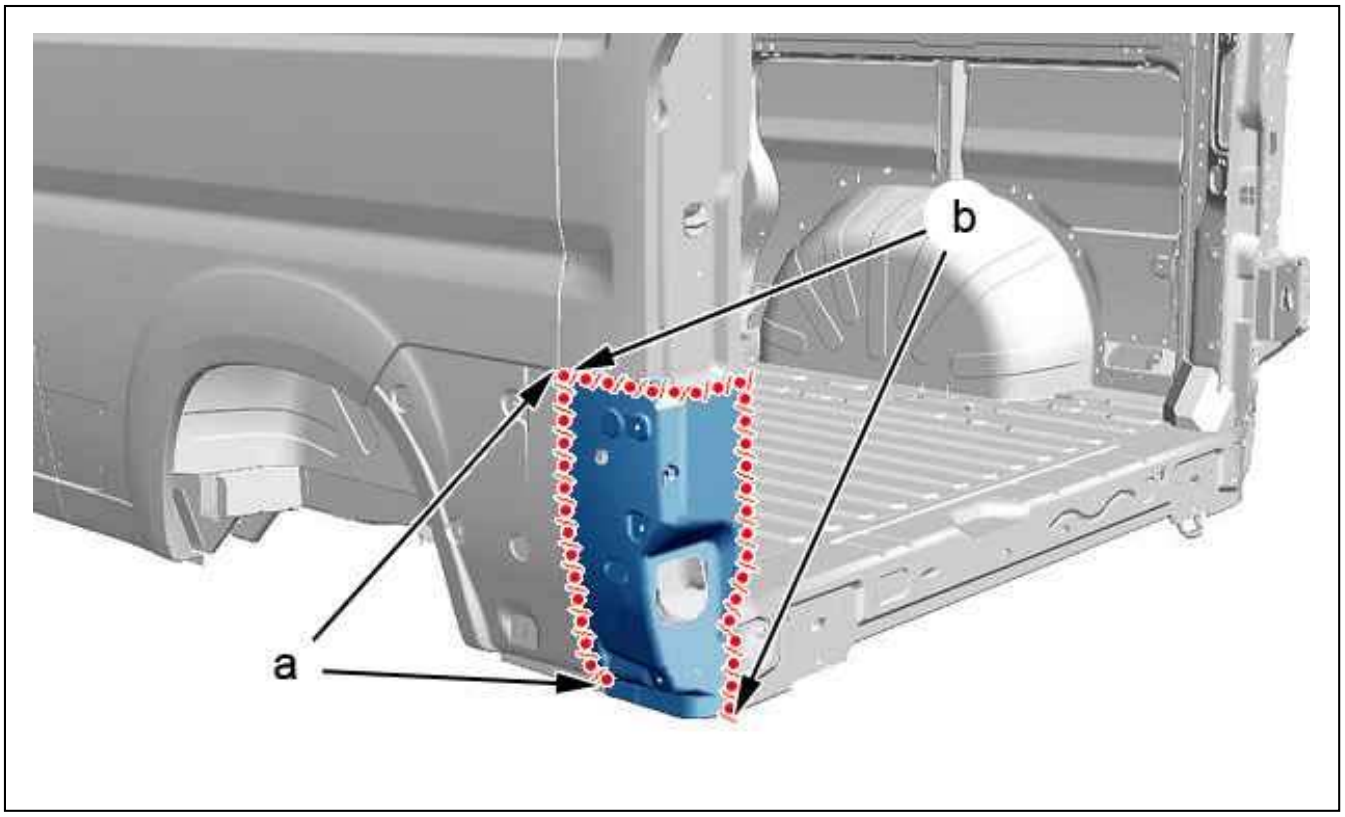

Figure : C4BP1Q3D

Figure 6.
Apply a sealing mastic of type " A1" (at "a") (see the relevant operation).
Apply a sealing mastic of type " A4" (at "b") (see the relevant operation).

9. Protection

Paint then spray into the hollow sections, product index C5, in the repair zone (see the relevant operation).

10. Reinitialisation

Reconnect the battery.

ESSENTIAL : Perform the operations to be carried out following reconnection of the battery.

REPLACEMENT : REAR ANGLE LOWER PANEL INNER PANEL

ESSENTIAL : All of the stripped surfaces must be protected by means of the approved electrolytic rezincing process (see the relevant operation).

ESSENTIAL : Observe the elementary rules of hygiene and safety (wear a face mask to protect against fumes and vapour - work in a well ventilated space).

1. Additional operations

Disconnect the battery.
Replace the rear angle lower panel (see the relevant operation).
Release the wiring harnesses.

2. Identification of the replacement parts



Figure : C4CP1SED

Figure 1.
Rear angle lower panel inner panel ..

3. Replacement part preparation



Figure : C4CP1SFD

Figure 2.
Rear angle lower panel inner panel.
Mark then drill to Ø 8 mm for later plug welding (6 holes).
Prepare the mating edges .

4. Cutting out

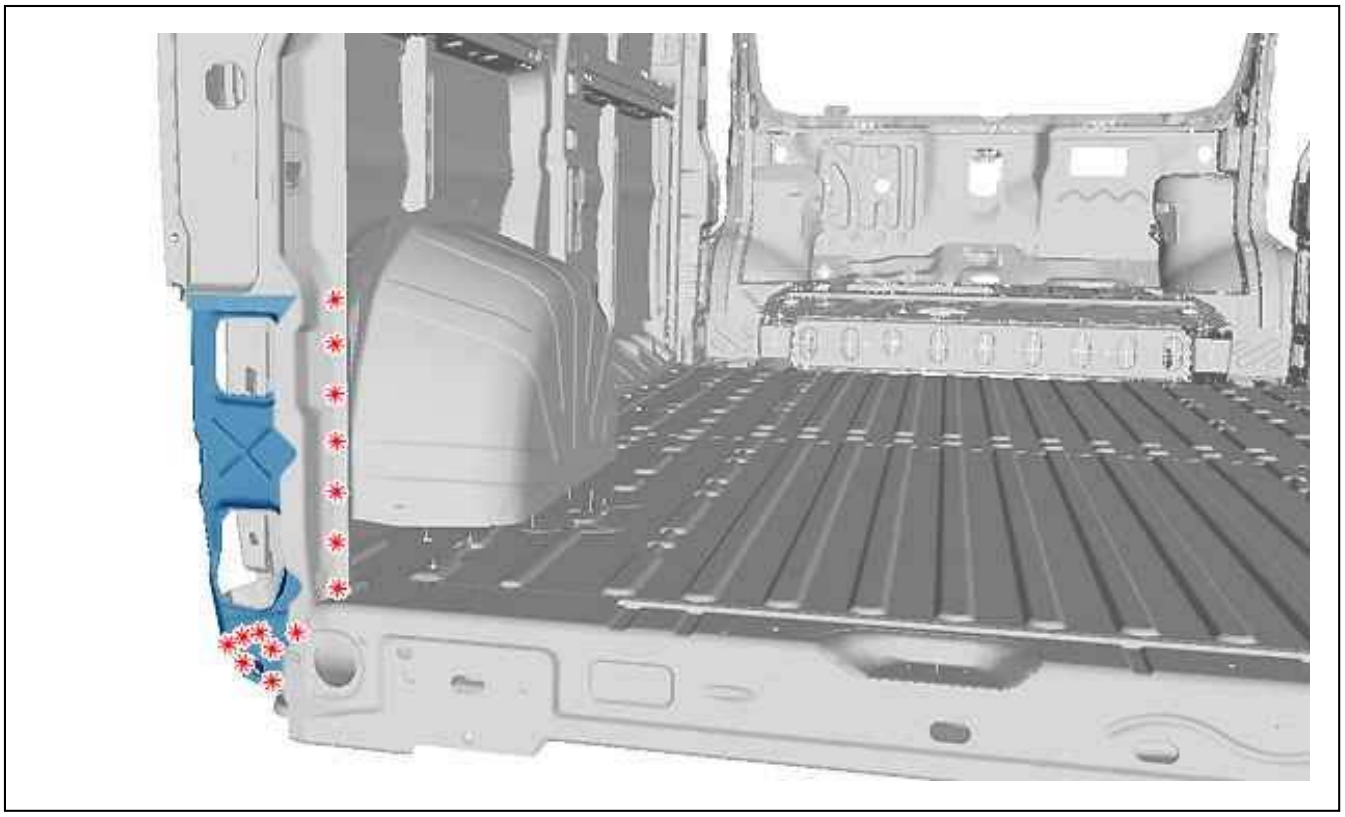

Figure : C4BP1PVD

Figure 3.
Cut out the spot welds .

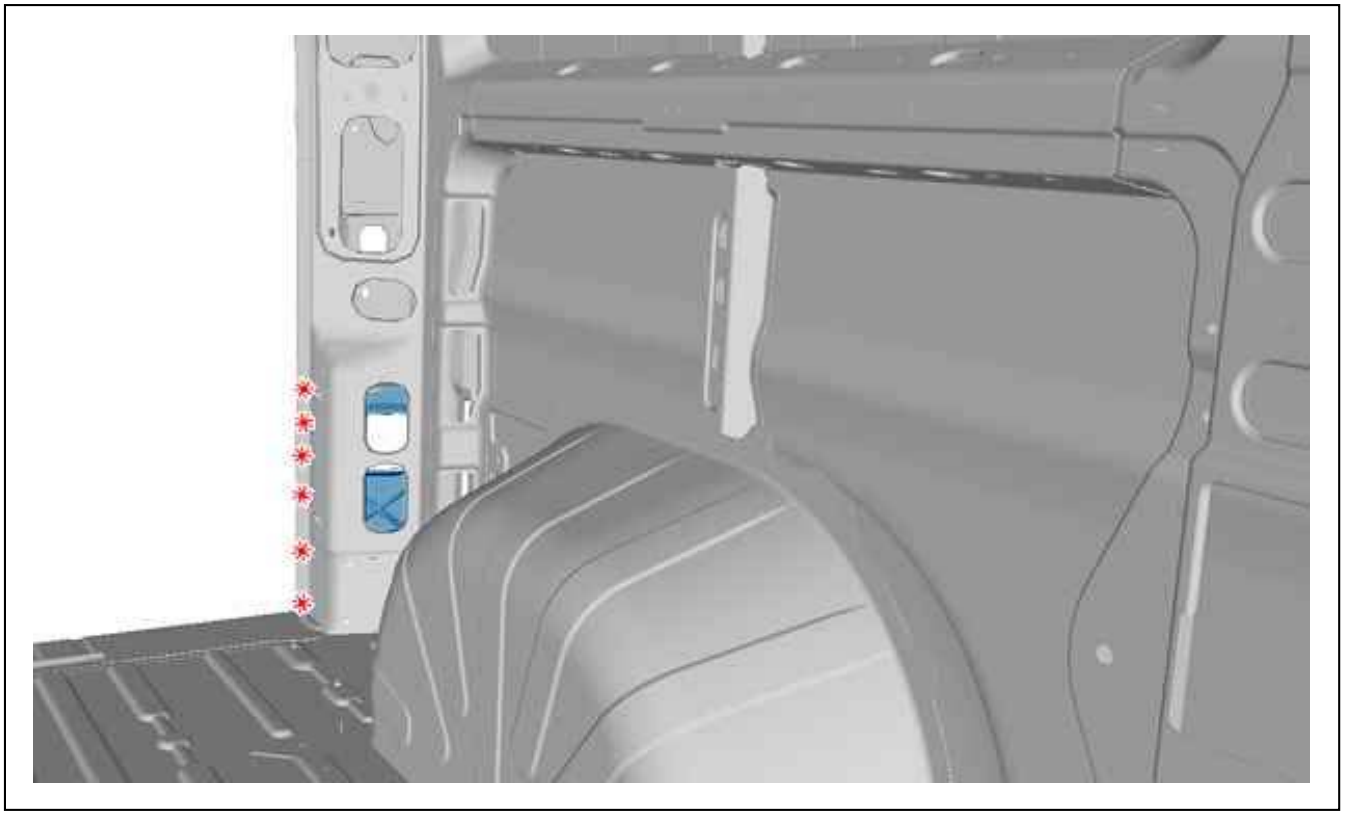

Figure : C4CP1SGD

Figure 4.

Cut out the spot welds .
Remove the rear angle lower panel inner panel.

5. Bodywork cleaning and preparation

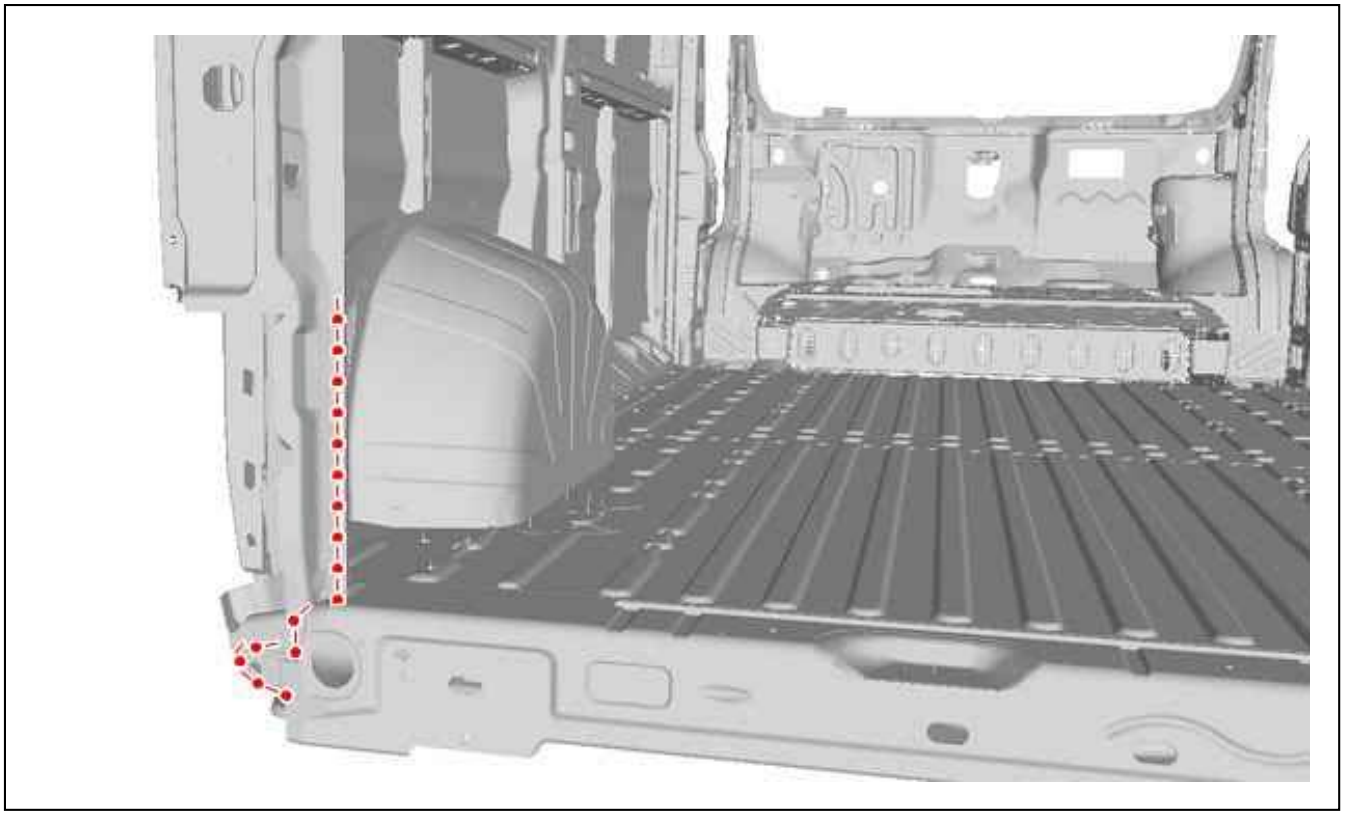

Figure : C4BP1PWD

Figure 5.
Prepare the mating edges .
Align the mating edges and protect them with a weldable primer.

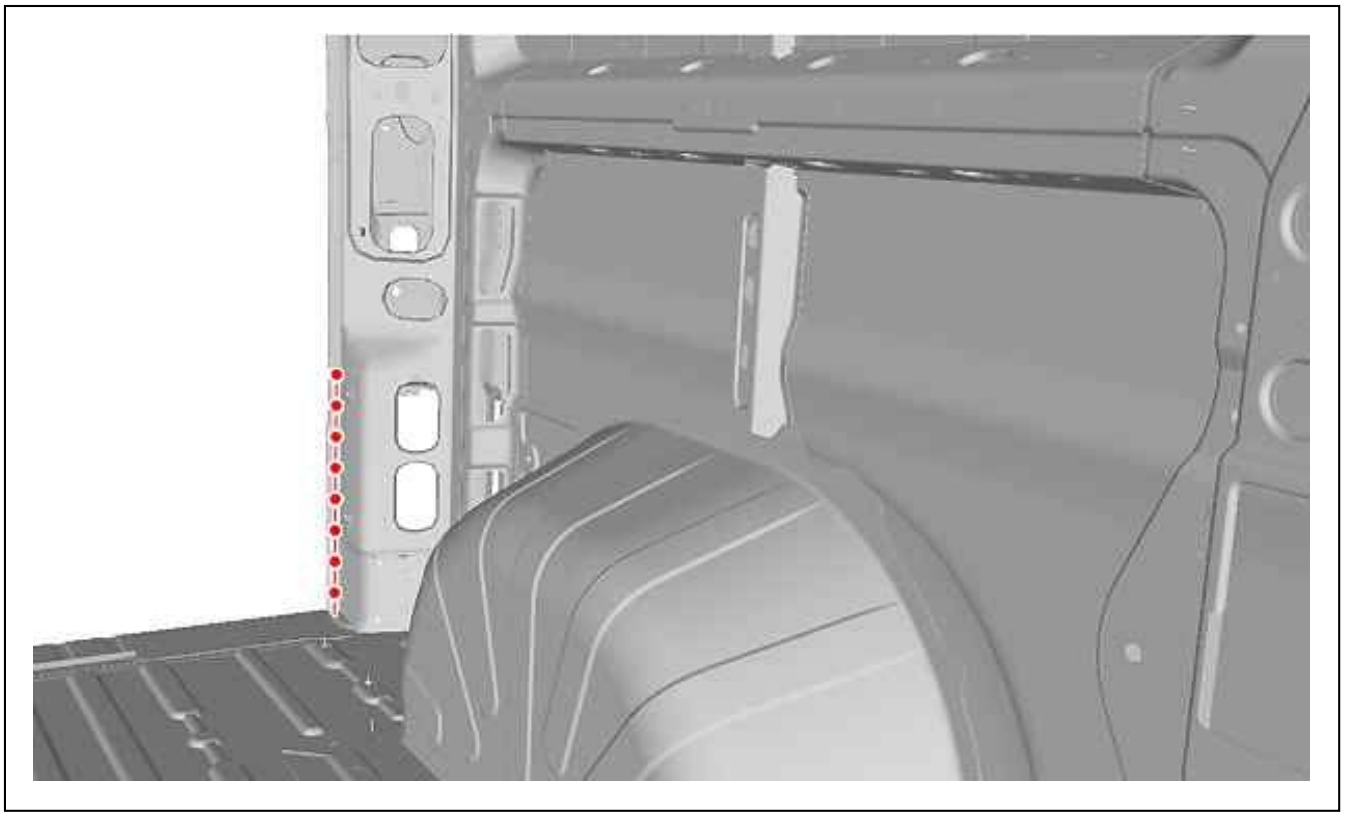

Figure : C4CP1SHD

Figure 6.
Prepare the mating edges .
Align the mating edges and protect them with a weldable primer.

6. Adjustment

Present the component for adjustment.
Check the fits and clearances (see the relevant operation).

7. Welding

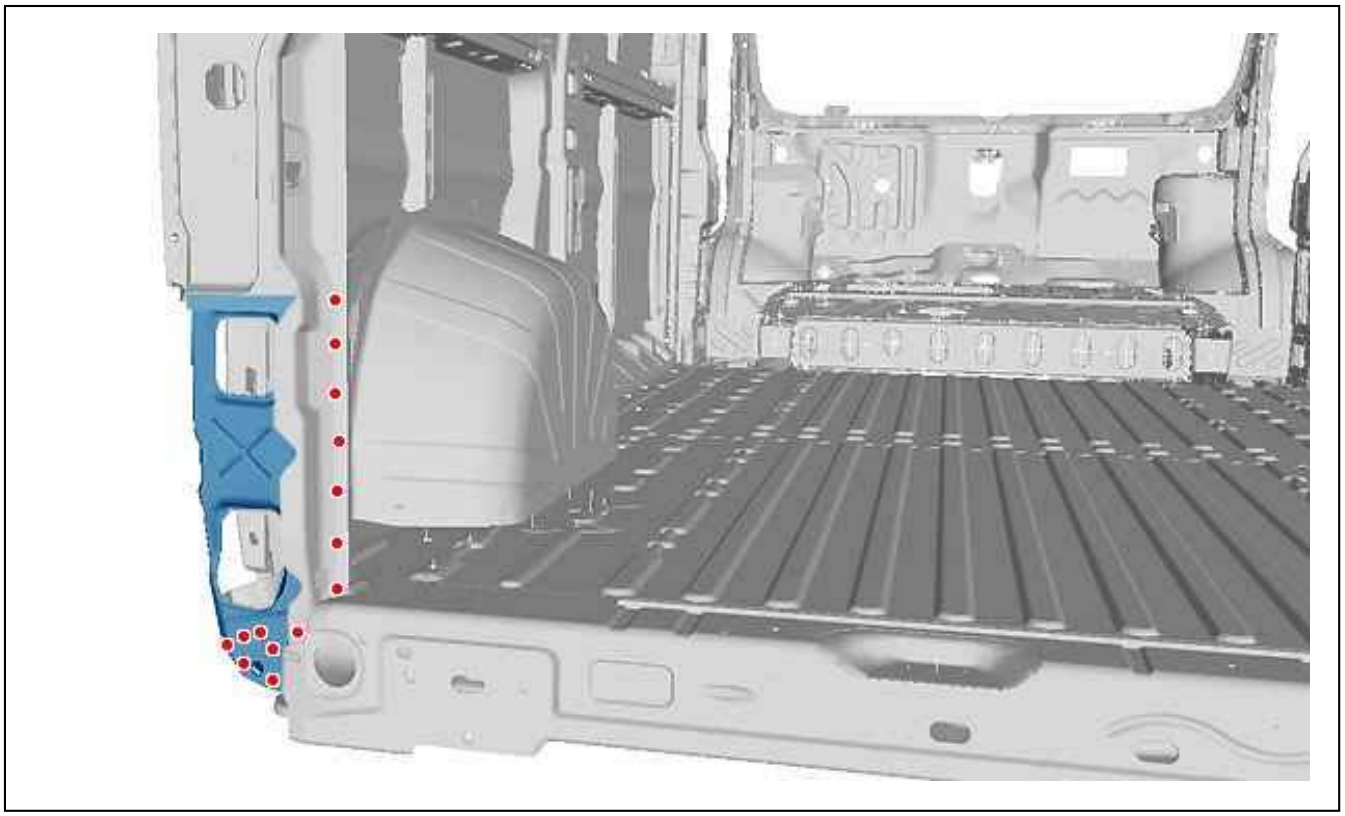

Figure : C4BP1PXD

Figure 7.
Weld with MIG or MAG spot welds.
Grind the spot welds.

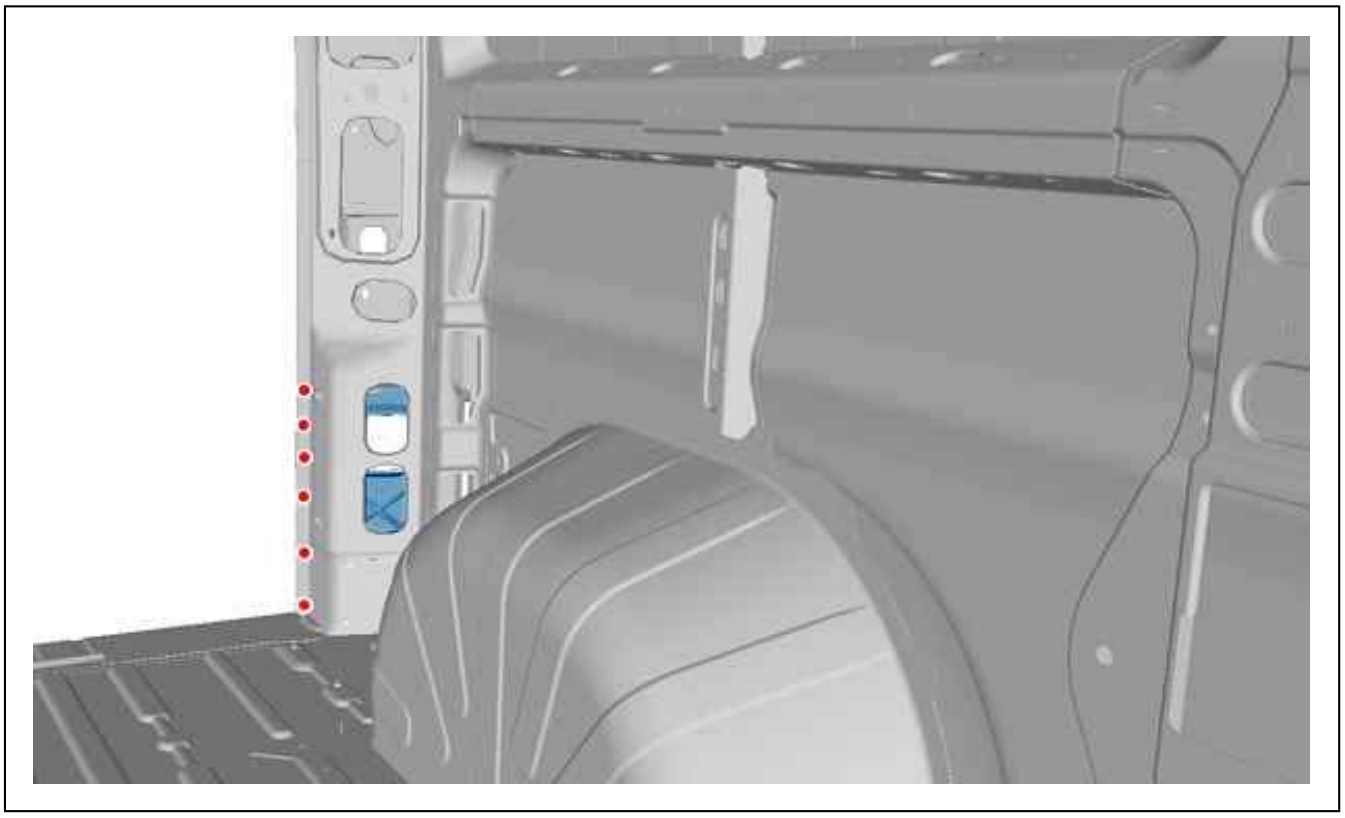

Figure : C4CP1SJD

Figure 8.
Weld with MIG or MAG spot welds.
Grind the spot welds.

8. Protection

Paint then spray into the hollow sections, product index C5, in the repair zone (see the relevant operation).

9. Reinitialisation

Reconnect the battery.

ESSENTIAL : Perform the operations to be carried out following reconnection of the battery.

REPLACEMENT : REAR WHEELARCH - WHEEL ARCH EXTENSION

ESSENTIAL : All of the stripped surfaces must be protected by means of the approved electrolytic rezincing process (see the relevant operation).

ESSENTIAL : Observe the elementary rules of hygiene and safety (wear a face mask to protect against fumes and vapour - work in a well ventilated space).

1. Additional operations

Disconnect the battery.
Replace the rear side panel and the top horizontal and vertical stiffeners (see the relevant operation).
Release the wiring harnesses.

2. Identification of the replacement parts

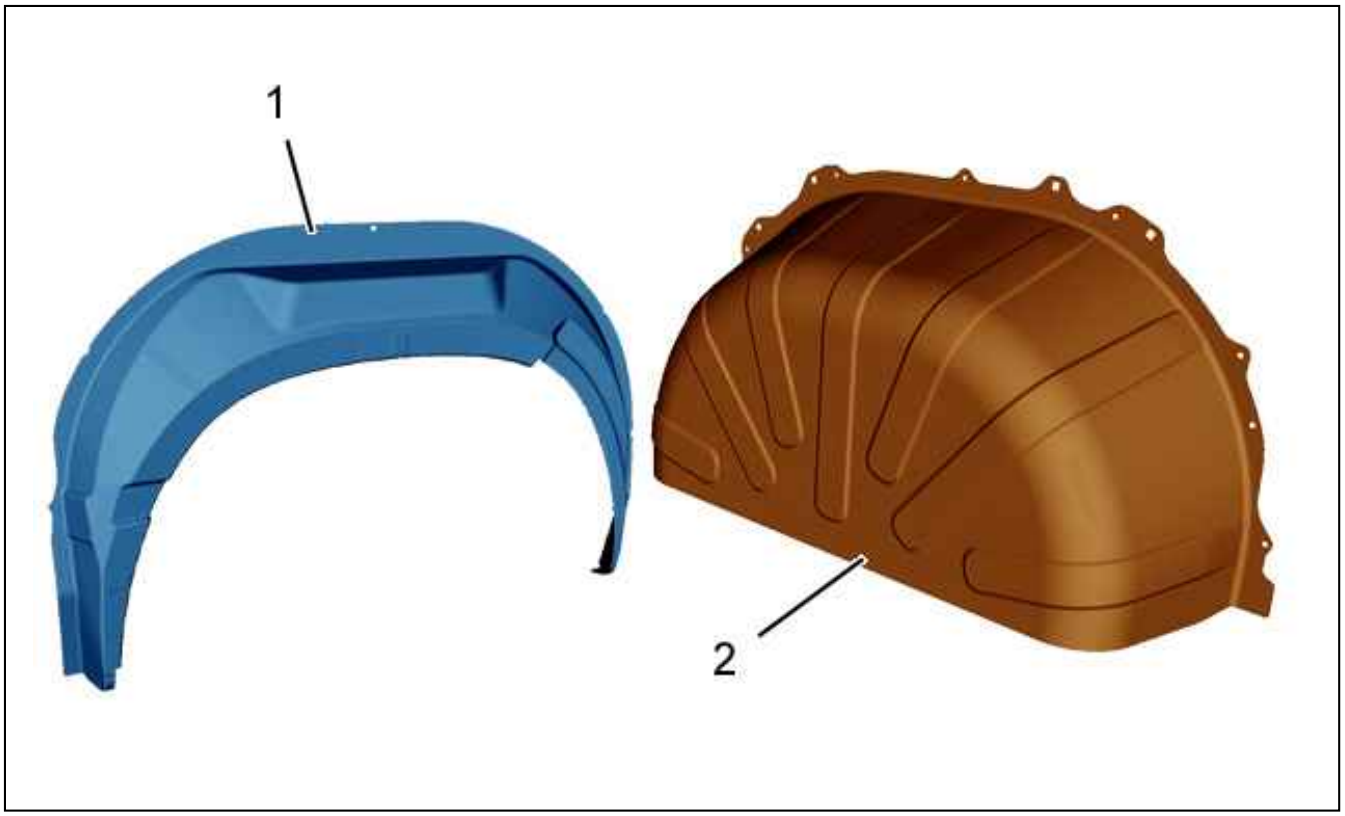

Figure : C4CP1TAD

Figure 1.
(1) Wheel arch extension.
(2) Rear wheelarch.

3. Cutting out

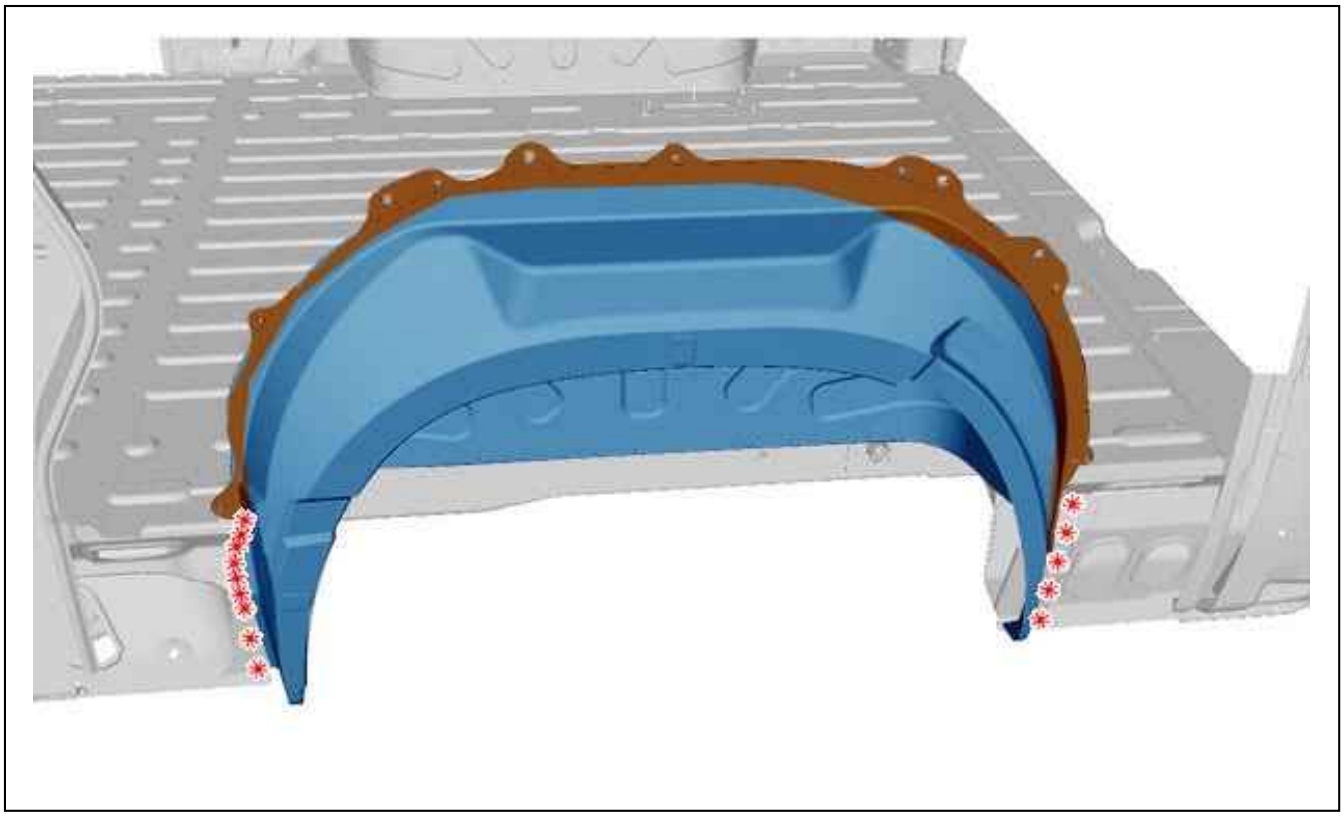

Figure : C4CP1TBD

Figure 2.
Cut out the spot welds .

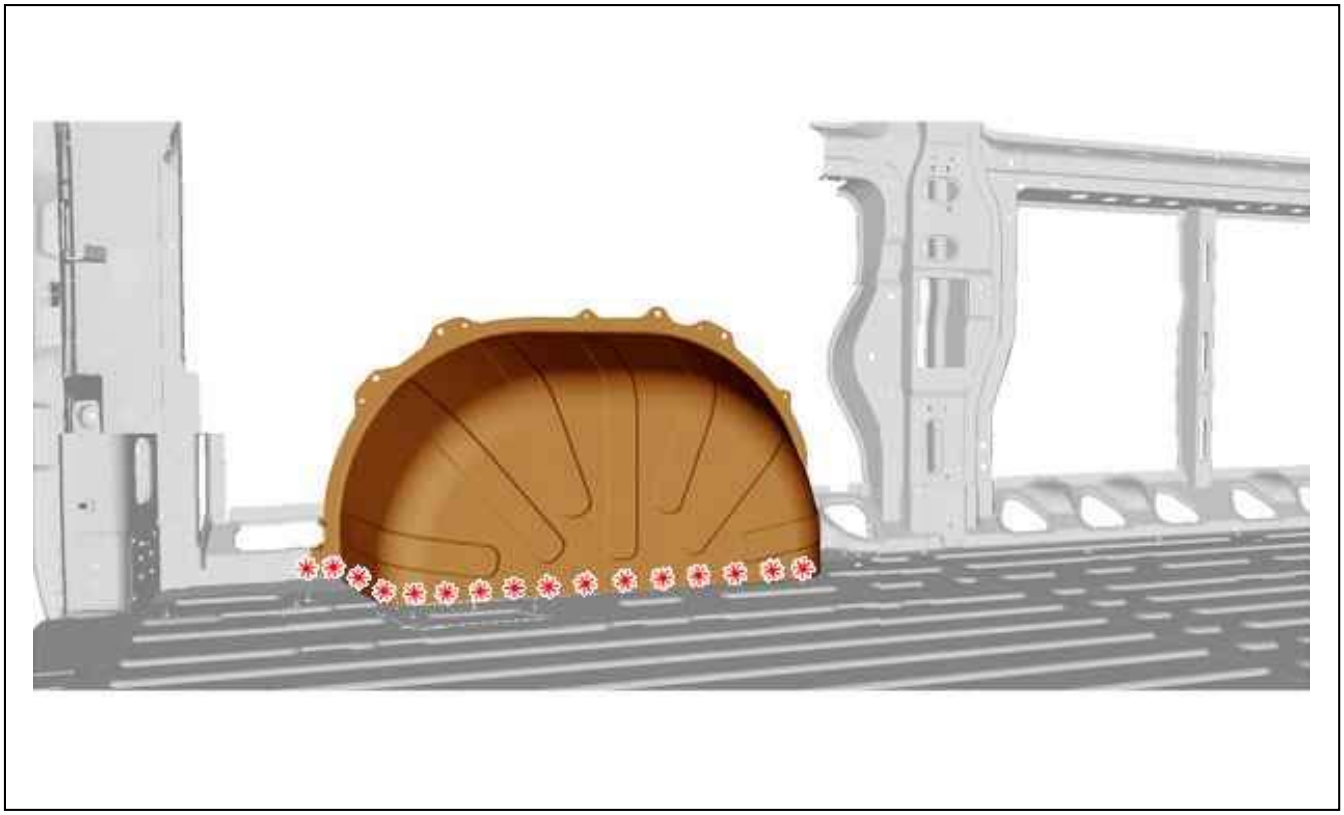

Figure : C4CP1TCD

Figure 3.

Cut out the spot welds .

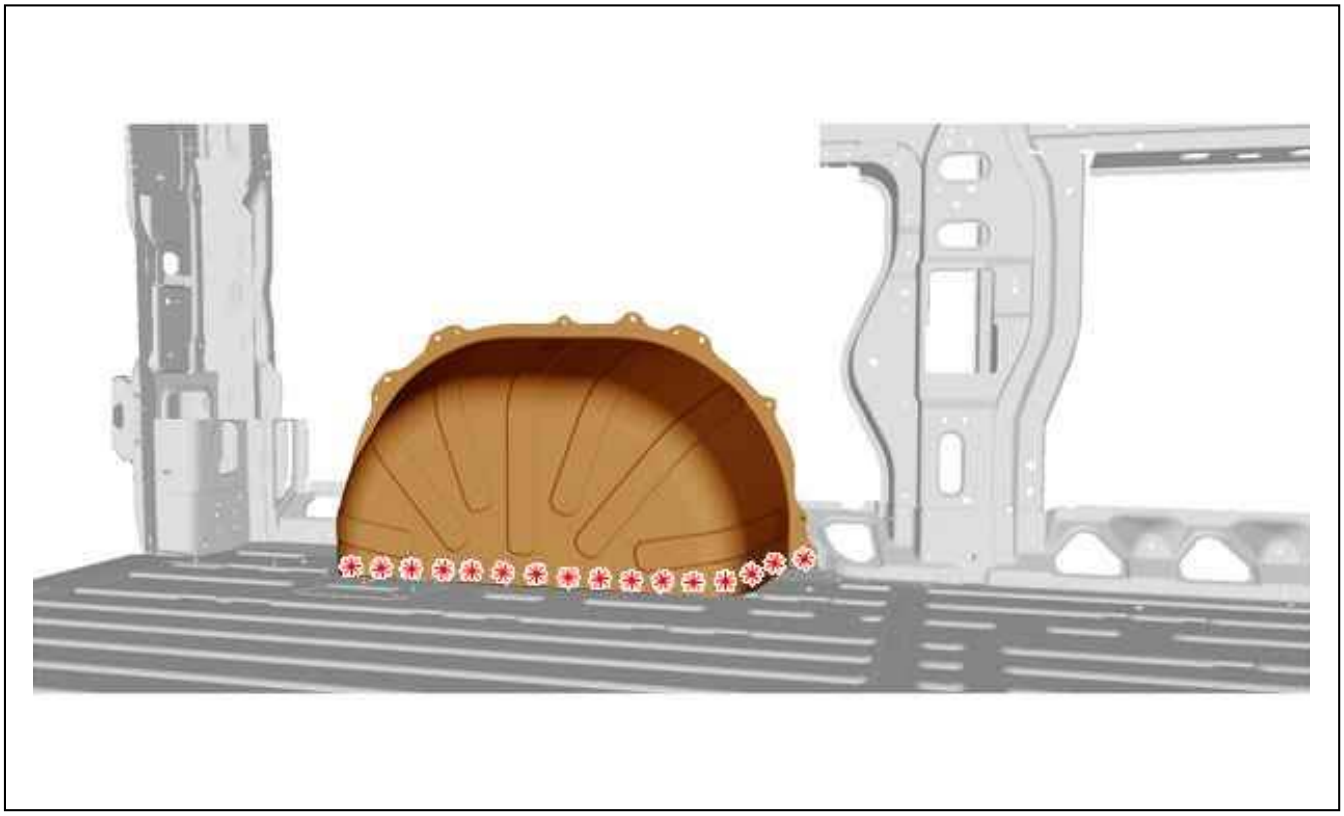

Figure : C4CP1TDD

Figure 4.
Cut out the spot welds .
Remove the rear wheelarch and the wheelarch extension.

4. Bodywork cleaning and preparation

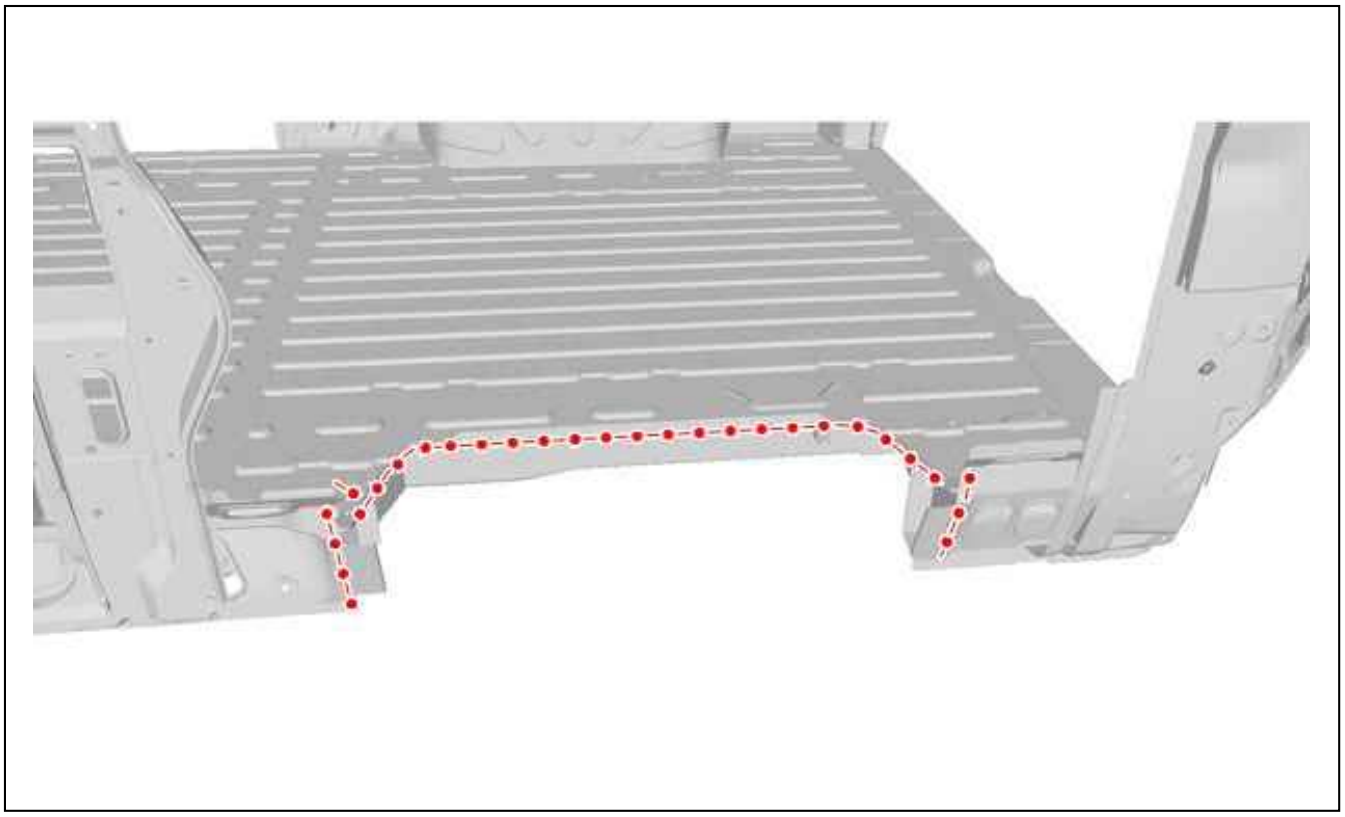

Figure : C4CP1TED

Figure 5.
Prepare the mating edges .
Align the mating edges and protect them with a weldable primer.

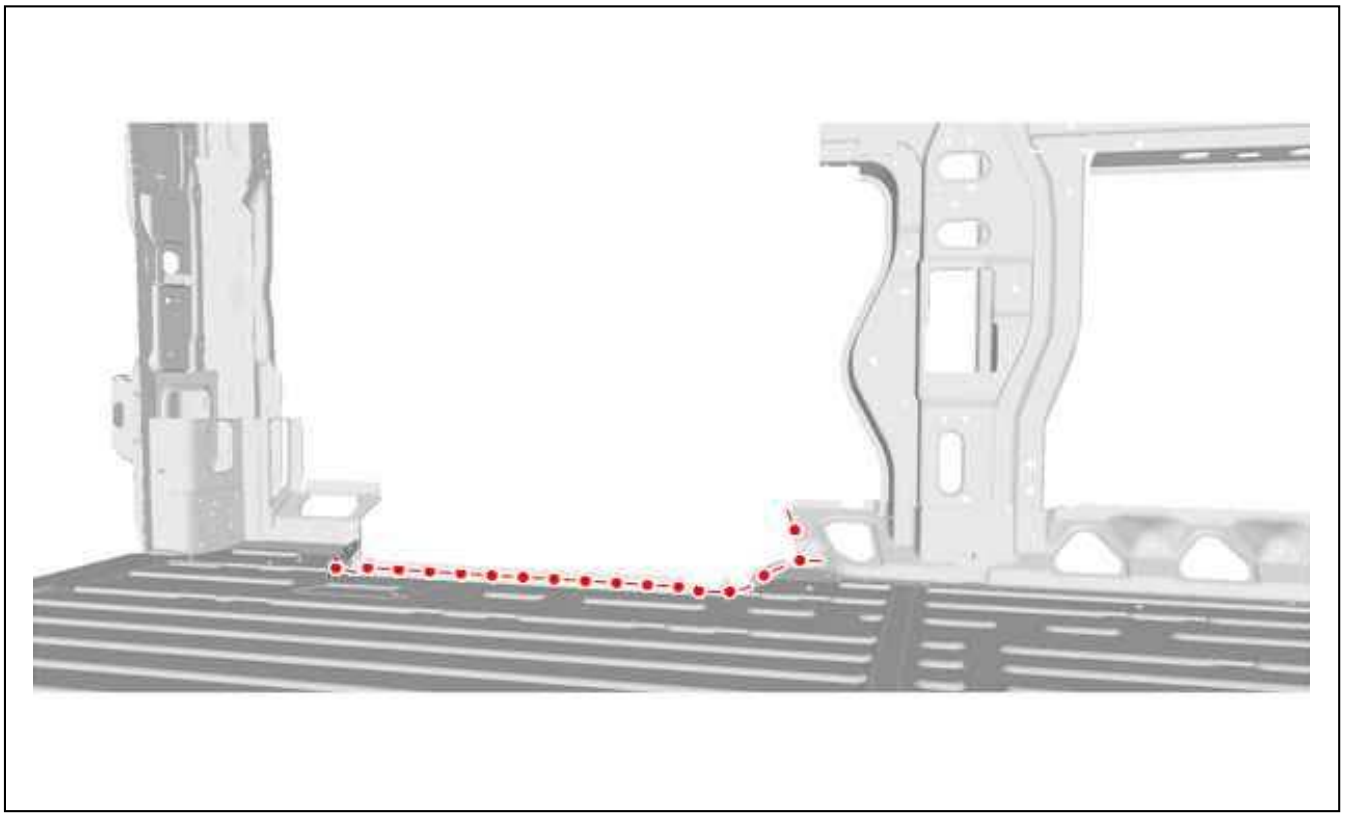

Figure : C4CP1TFD

Figure 6.
Prepare the mating edges .
Align the mating edges and protect them with a weldable primer.

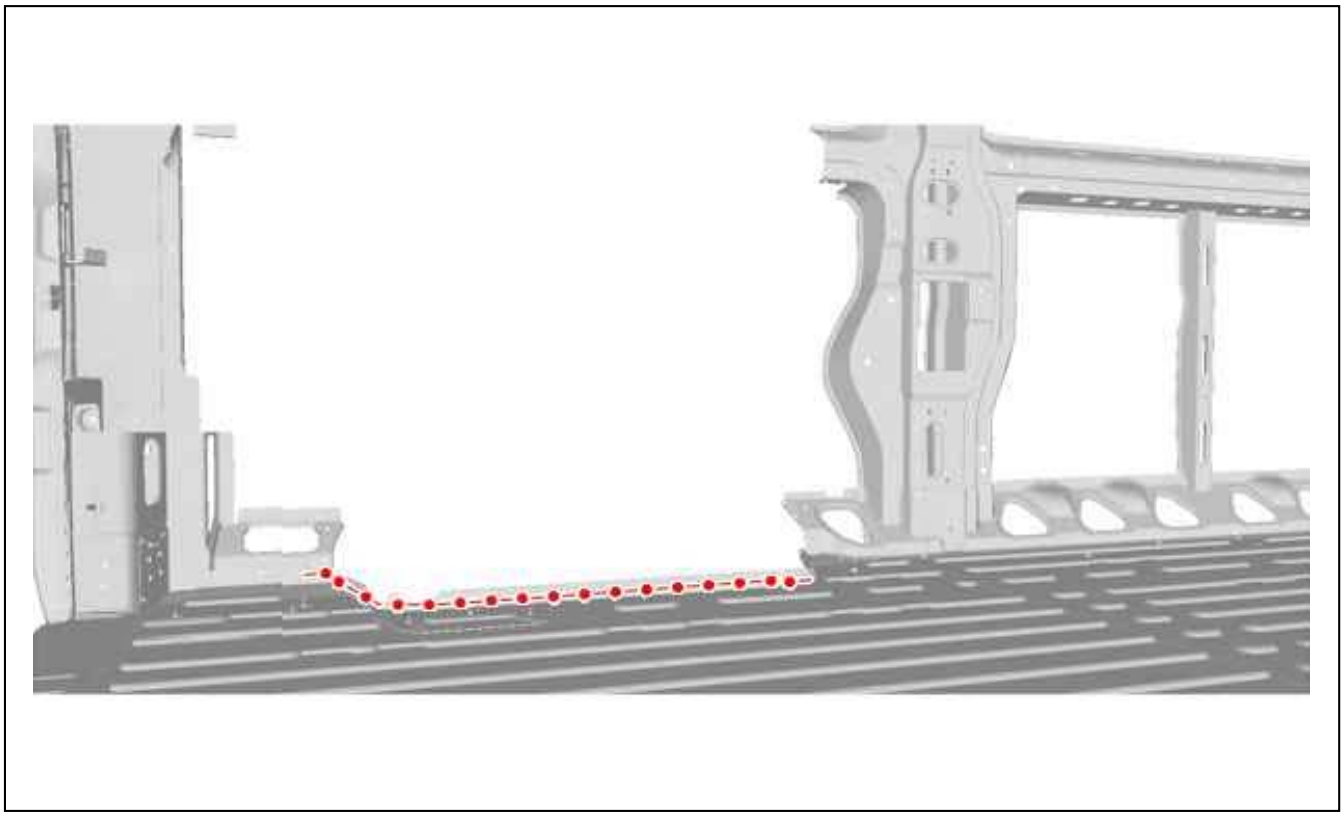

Figure : C4CP1TGD

Figure 7.
Prepare the mating edges .
Align the mating edges and protect them with a weldable primer.

5. Adjustment

Present the elements, allowing for adjustment.
Check the fits and clearances (see the relevant operation).

6. Welding

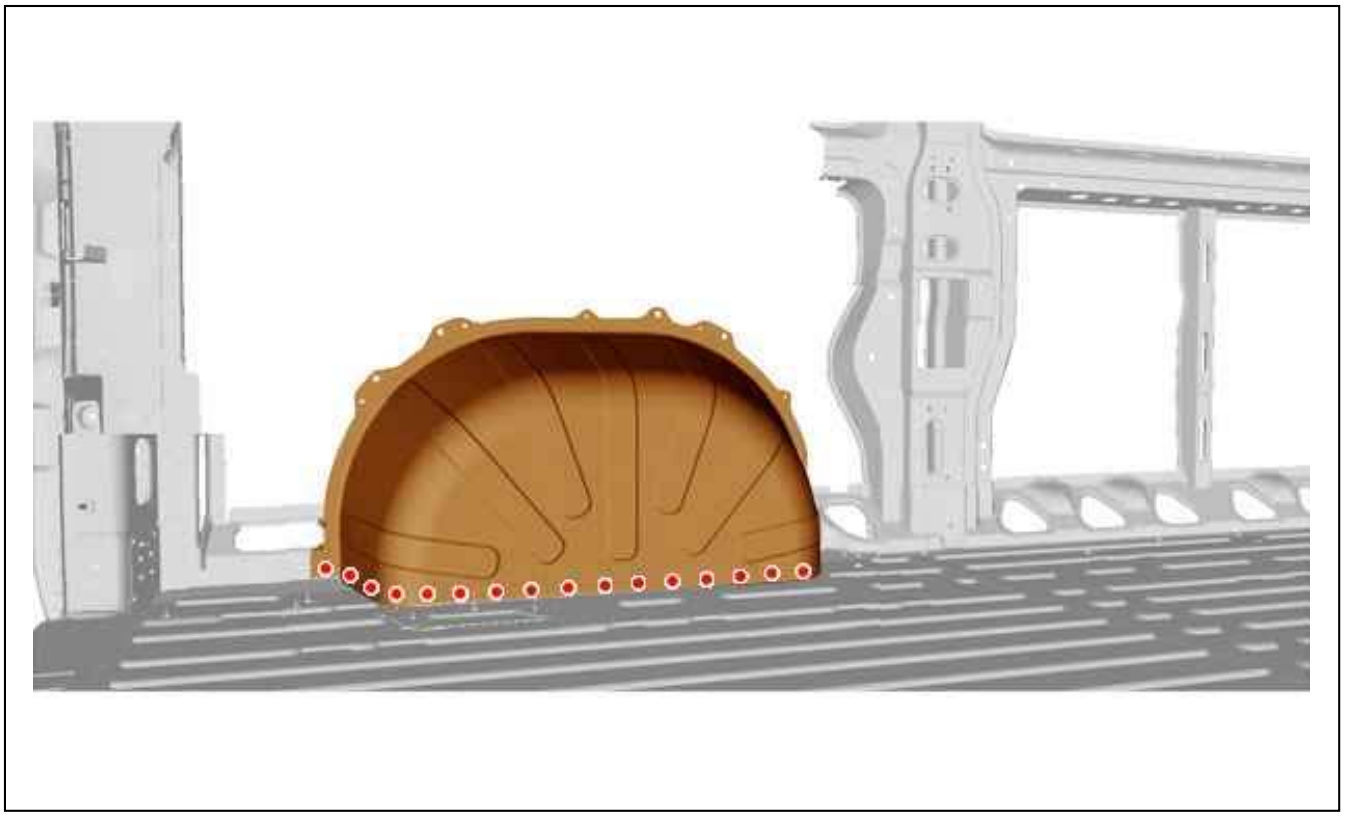

Figure : C4CP1THD

Figure 8.
Weld with MIG or MAG spot welds.
Grind the spot welds.

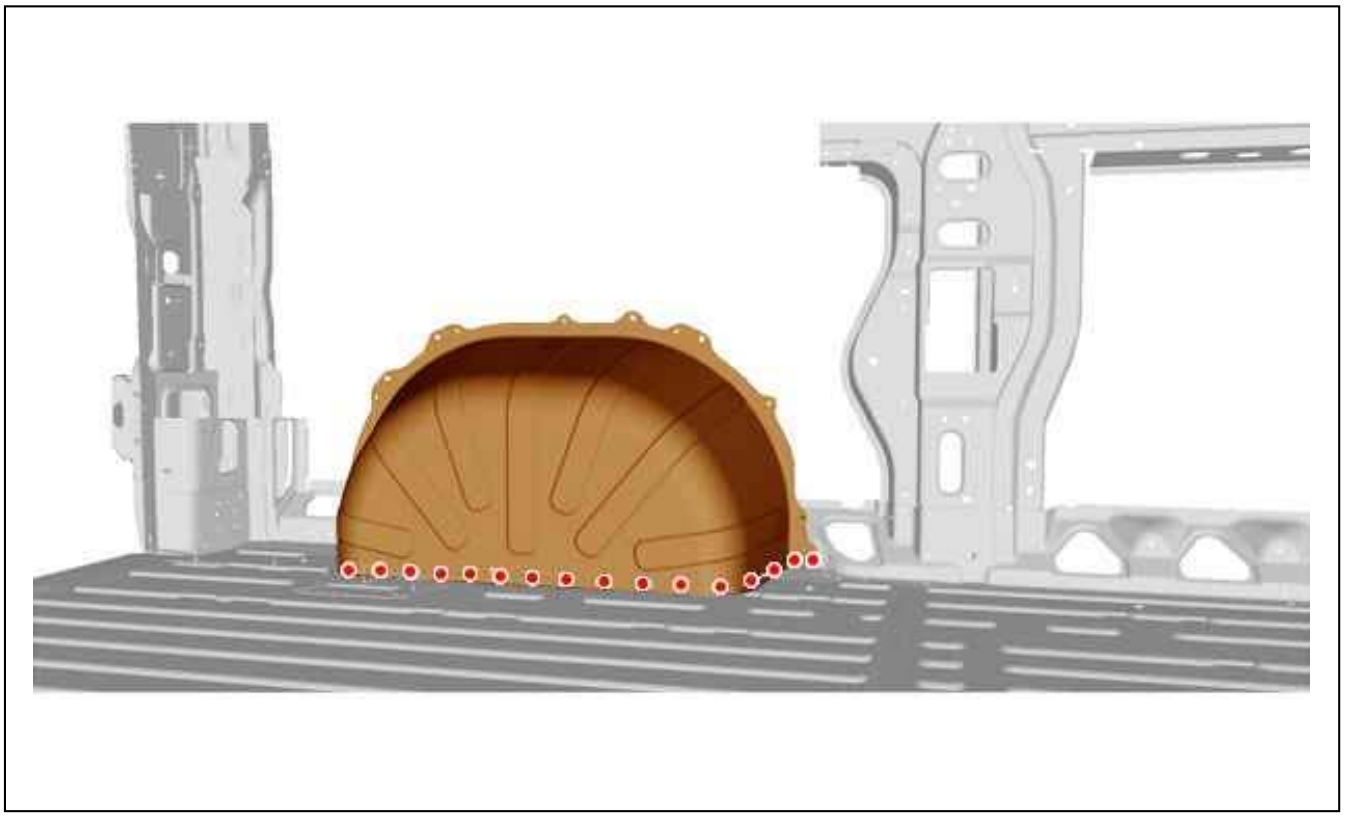

Figure : C4CP1TJD

Figure 9.
Weld with MIG or MAG spot welds.
Grind the spot welds.

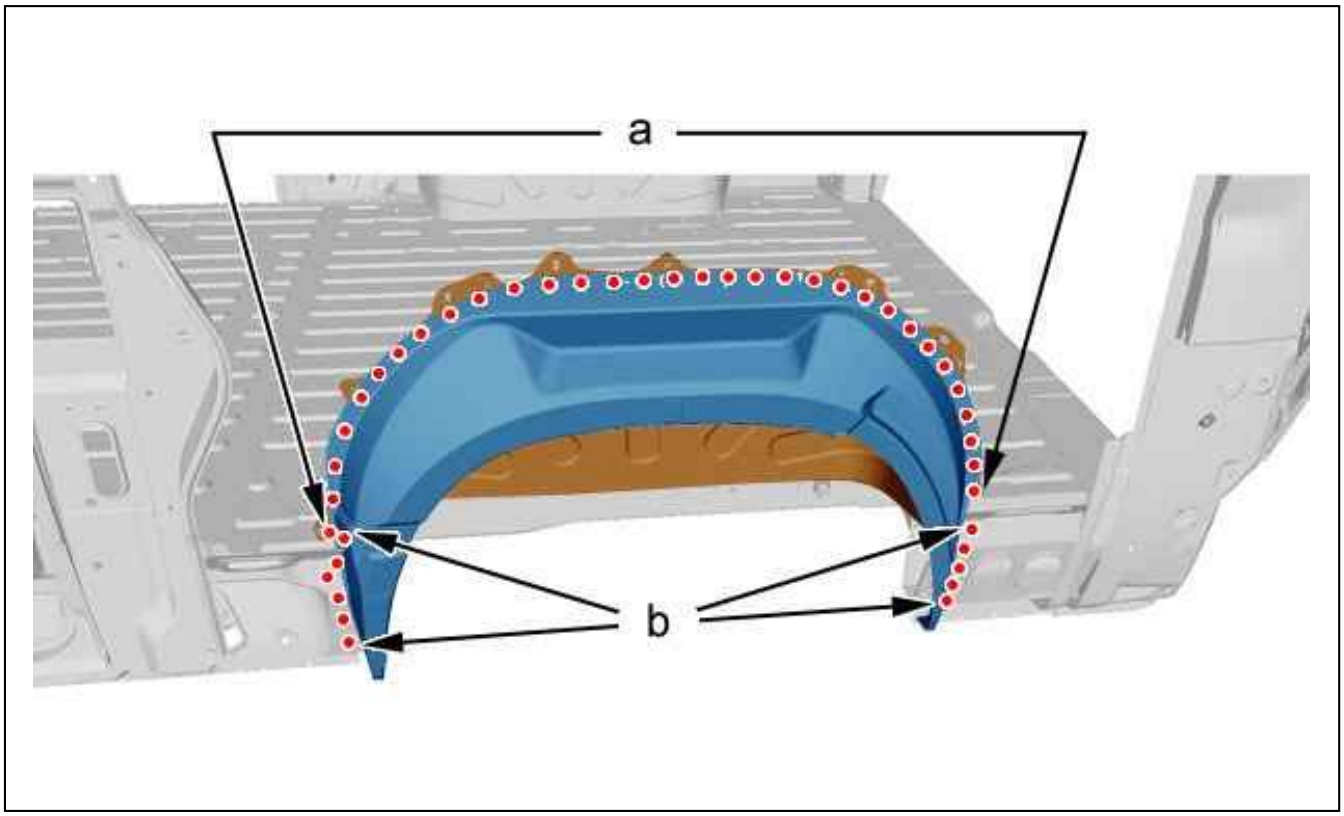

Figure : C4CP1TKD

Figure 10.
Weld with electric spot welds (at "a").
Weld with MIG or MAG spot welds (at "b").
Grind the spot welds.

7. Sealing

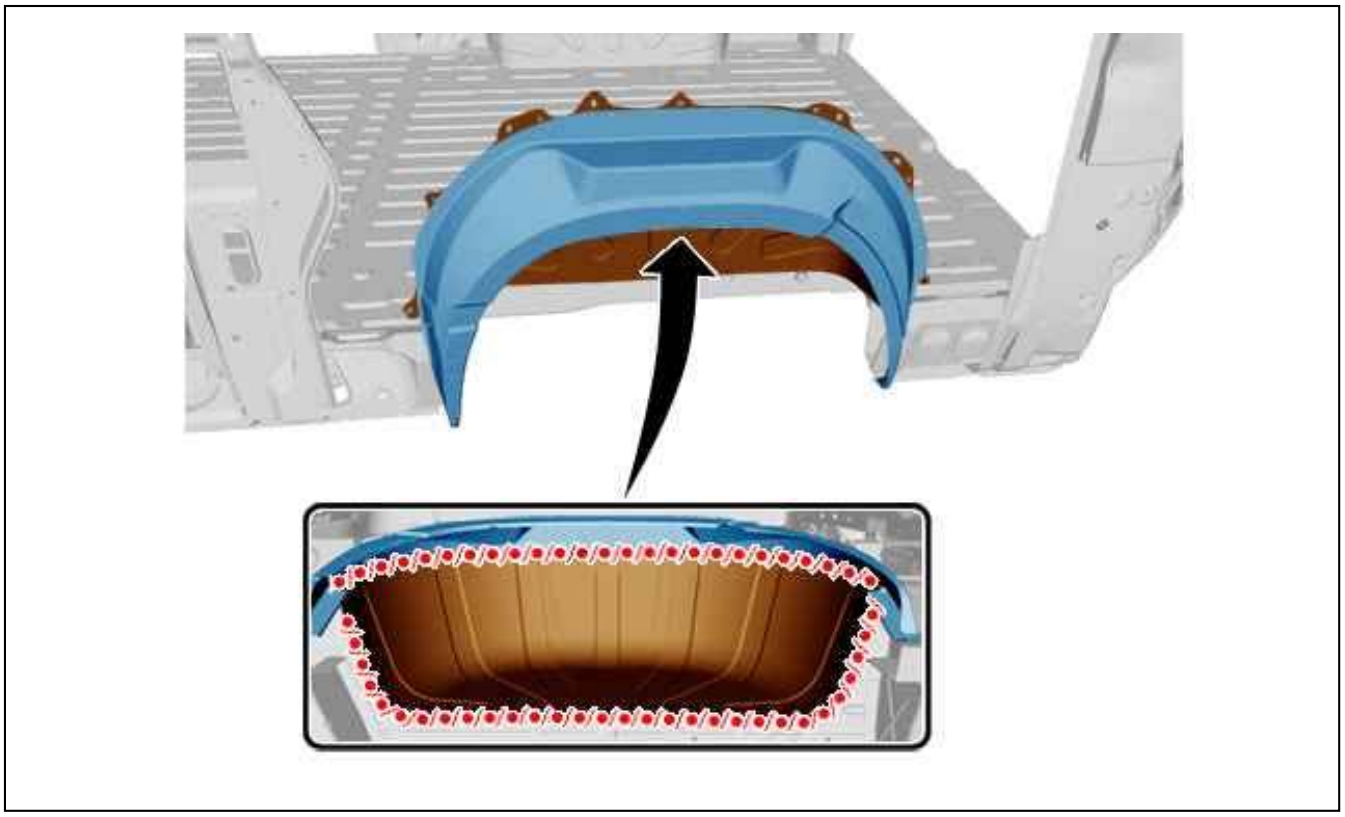

Figure : C4CP1TLD

Figure 11.
Apply a phosphate-print layer on the zone laid bare.
Apply a sealing mastic of type " A1" (see the relevant operation).

8. Protection

Paint then spray into the hollow sections, product index C5, in the repair zone (see the relevant operation).
Apply an anti-chip layer (see the relevant operation).

9. Reinitialisation

Reconnect the battery.

ESSENTIAL : Perform the operations to be carried out following reconnection of the battery.

REPLACEMENT : FRONT LONGERON CORE

ESSENTIAL : All of the stripped surfaces must be protected by means of the approved electrolytic rezincing process . (see the relevant operation).

ESSENTIAL : Observe the elementary rules of hygiene and safety (wear a face mask to protect against fumes and vapour - work in a well ventilated space).

1. Additional operations

Disconnect the battery.
Partial replacement of the cab door frame (see the relevant operation).

2. Identification of the replacement parts

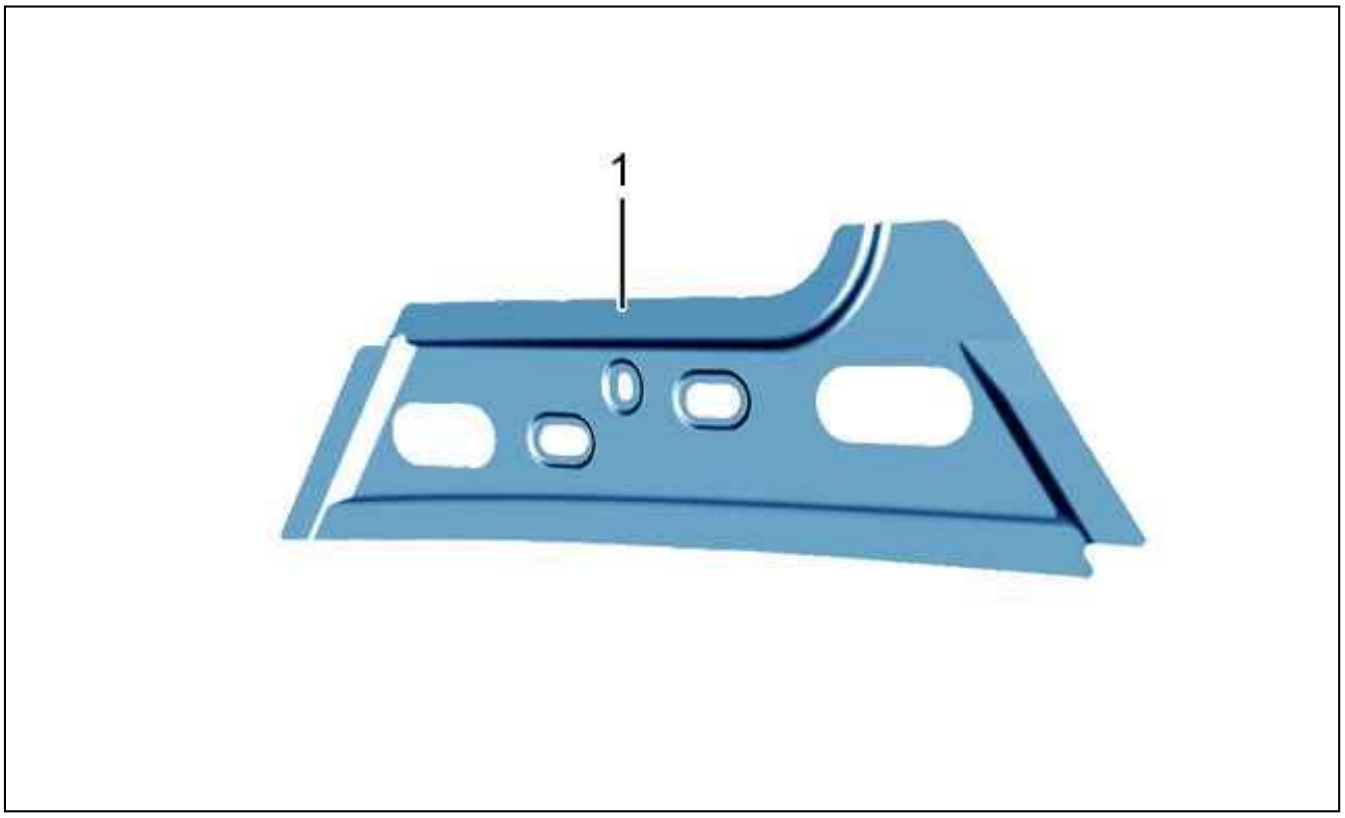

Figure : C4CP1RCD

Figure 1.
Front longeron core.

3. Preparation of the new part

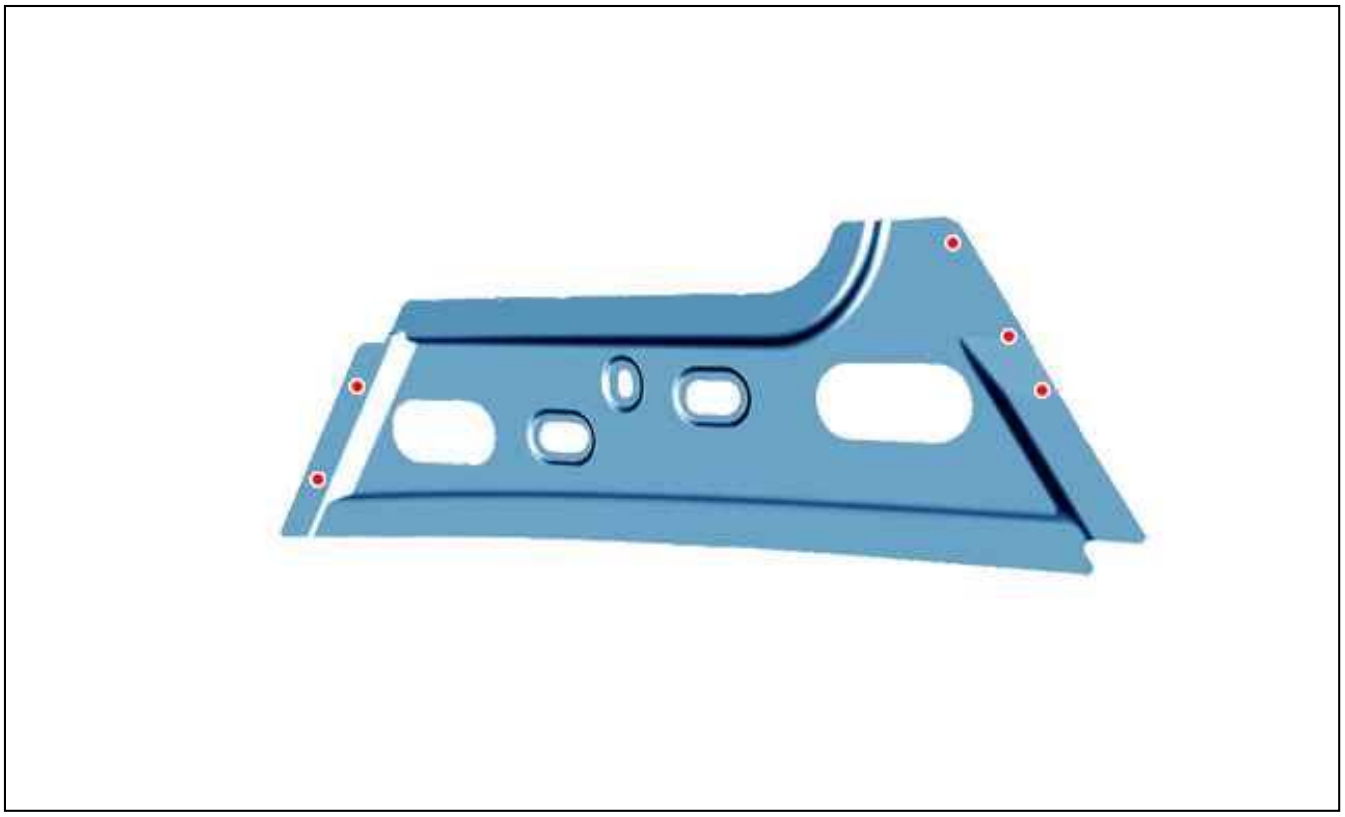

Figure : C4CP1RDD

Figure 2.
Mark then drill to Ø 6 mm for later plug welding (5 holes).
Prepare the mating edges .

4. Cutting out

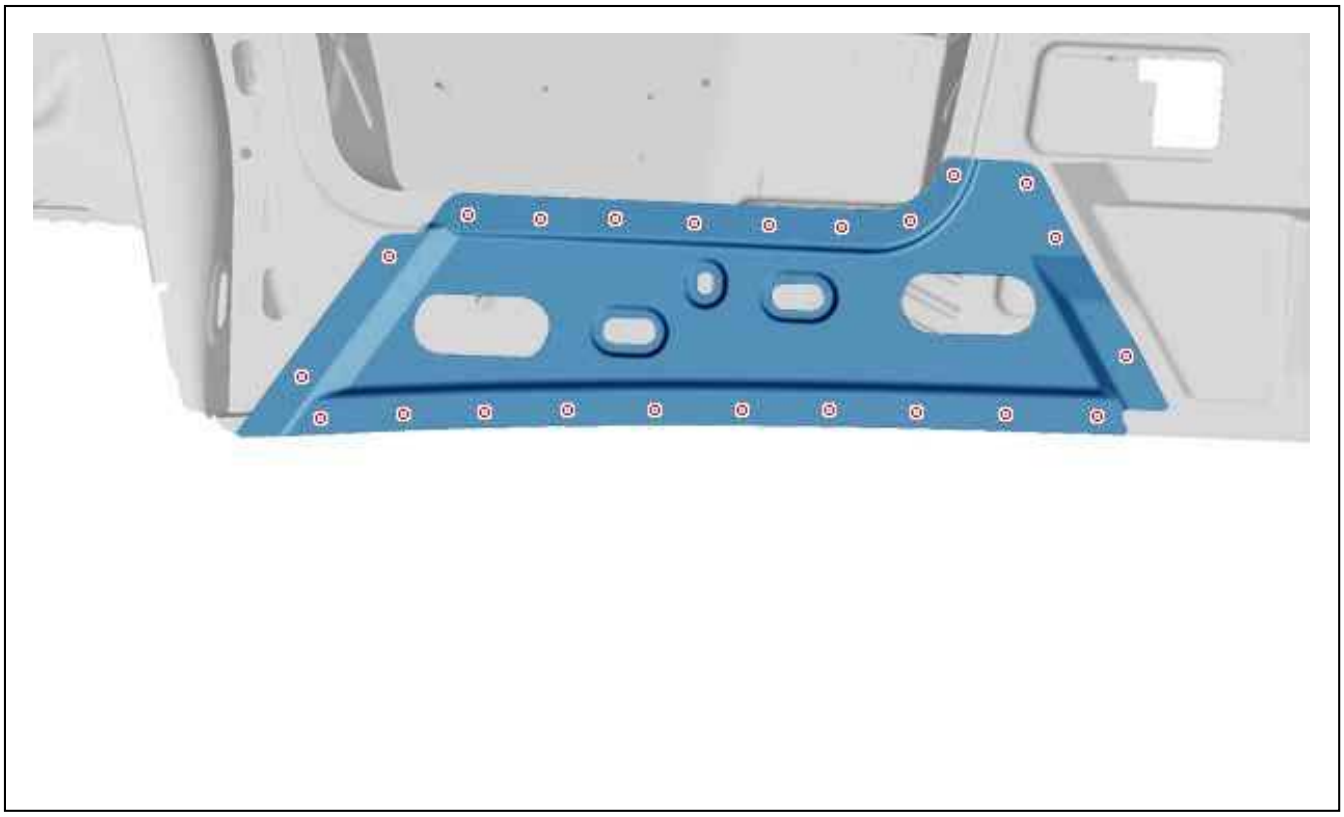

Figure : C4CP1RED

Figure 3.
Cut out the spot welds .
Remove the longeron closing plate Before .

5. Bodywork cleaning and preparation

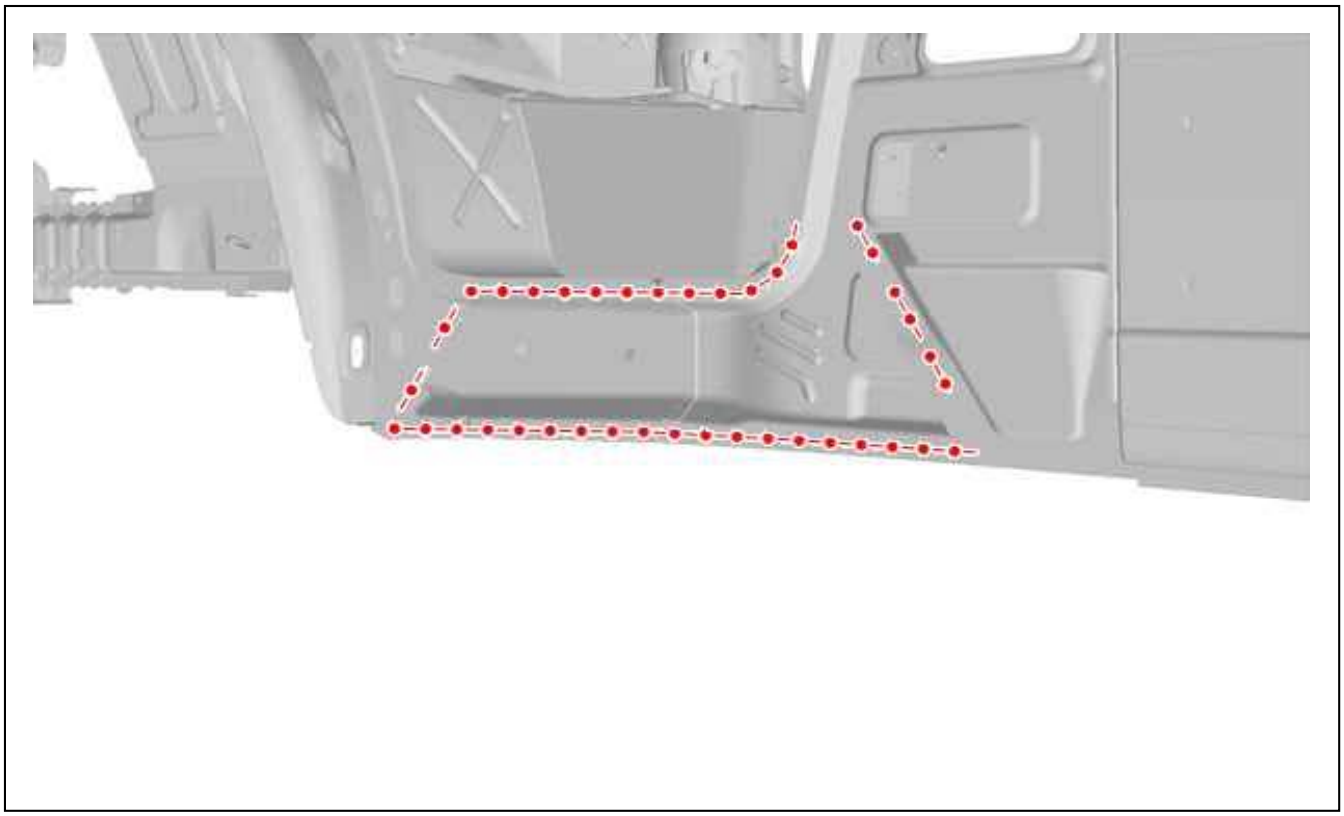

Figure : C4CP1RFD

Figure 4.
Prepare the mating edges .
Align the mating edges and protect them with a weldable primer.

6. Adjustment

Present the component for adjustment.
Check the fits and clearances (see the relevant operation).

7. Welding

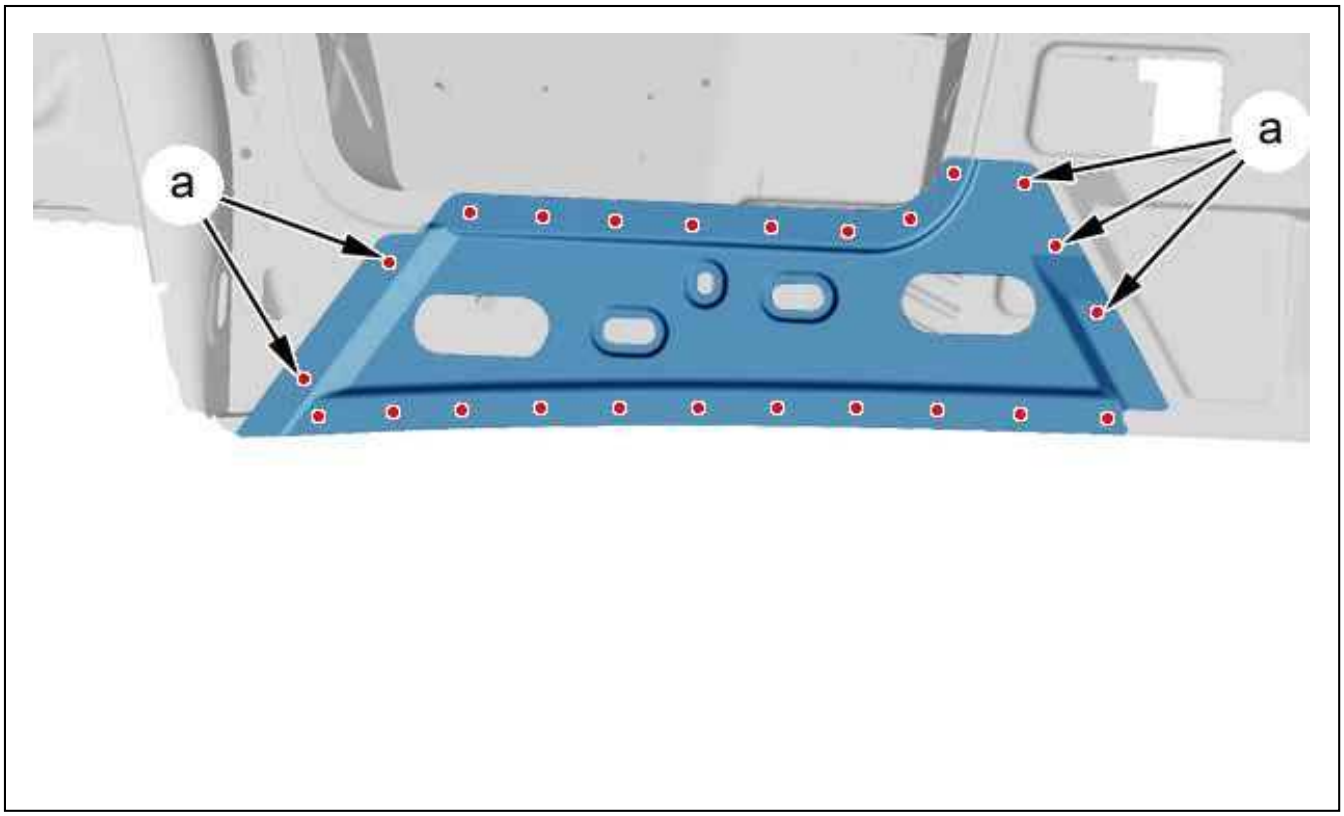

Figure : C4CP1RGD

Figure 5.
Weld with MIG or MAG spot welds.
Grind the plug welds.
Weld with electric spot welds.

8. Protection

Paint then spray into the hollow sections, product index C5, in the repair zone (see the relevant operation).

9. Reinitialisation

Reconnect the battery.

ESSENTIAL : Perform the operations to be carried out following reconnection of the battery.

REPLACEMENT : C POST UPPER INNER PANEL AND PART C POST INNER PANEL

ESSENTIAL : All of the stripped surfaces must be protected by means of the approved electrolytic rezincing process (see the relevant operation).

ESSENTIAL : Observe the elementary rules of hygiene and safety (wear a face mask to protect against fumes and vapour - work in a well ventilated space).

1. Additional operations

Disconnect the battery.
Removing - refitting :

- The rear lamp
- The rear right door

Detrim - trim the rear panel trim.
Release the wiring harnesses.

2. Identification of the replacement parts

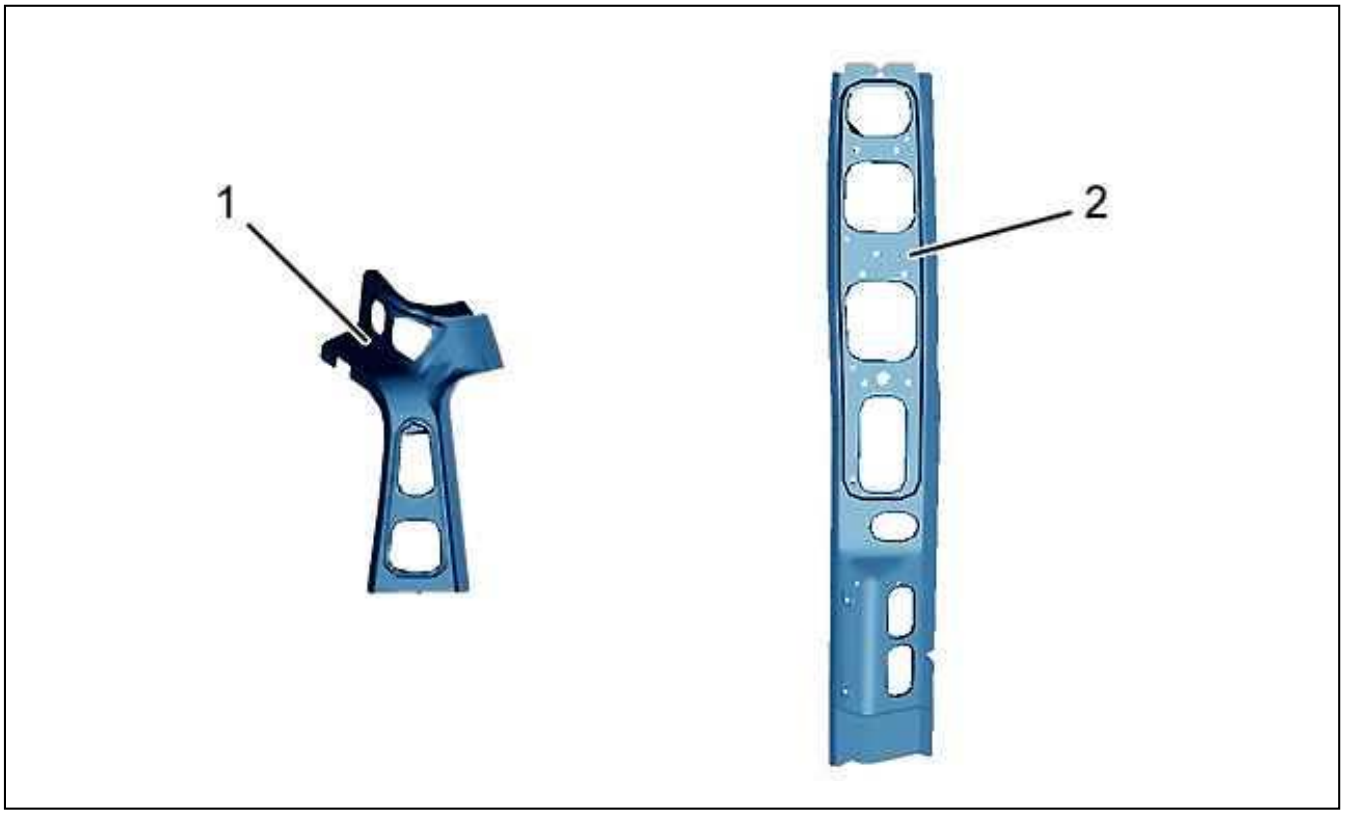

Figure : C4CP1VWD

Figure 1.
(1) C post upper inner panel.
(2) "C" post inner panel.

3. Preparation of the replacement parts

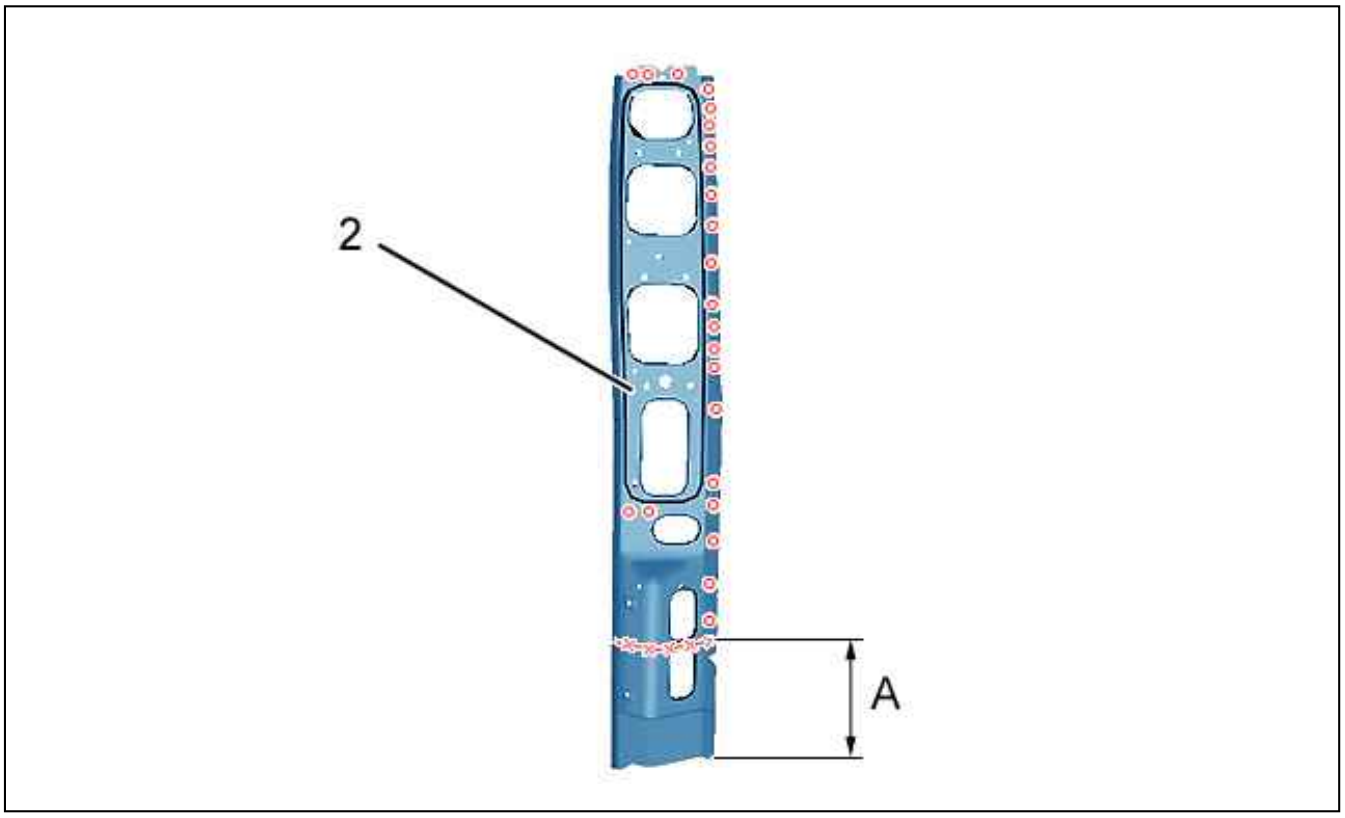

Figure : C4CP1VXD

Figure 3.
(2) "C" post inner panel.
Mark then cut (final cutting).
Mark out then drill 8 mm holes for later plug welding (23 holes).
Prepare the mating edges .



Figure : C4CP1VYD

Figure 4.
(1) C post upper inner panel.
Mark out then drill 8 mm holes for later plug welding (18 holes).
Prepare the mating edges .

4. Cutting out

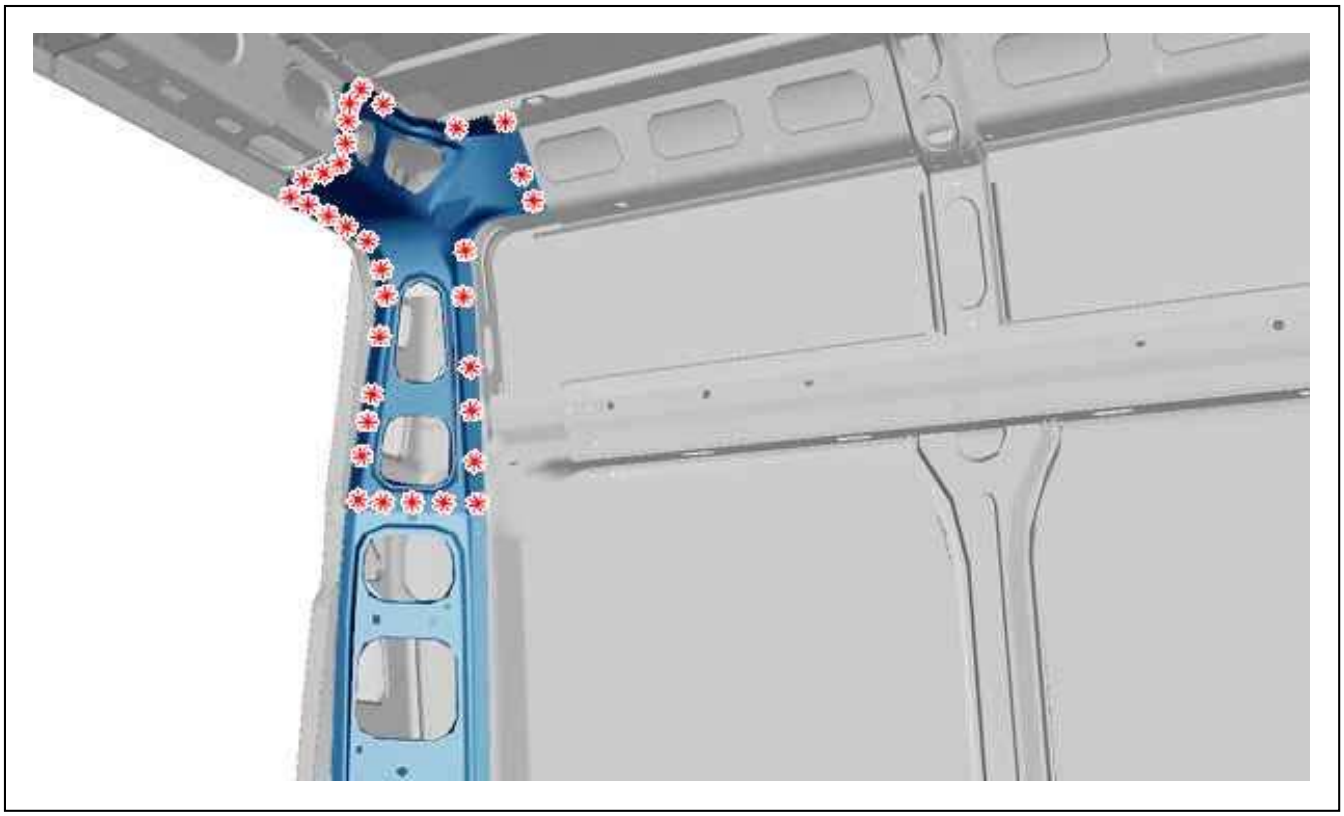

Figure : C4CP1VZD

Figure 5.
Cut out the spot welds .
Remove the C post upper inner panel.

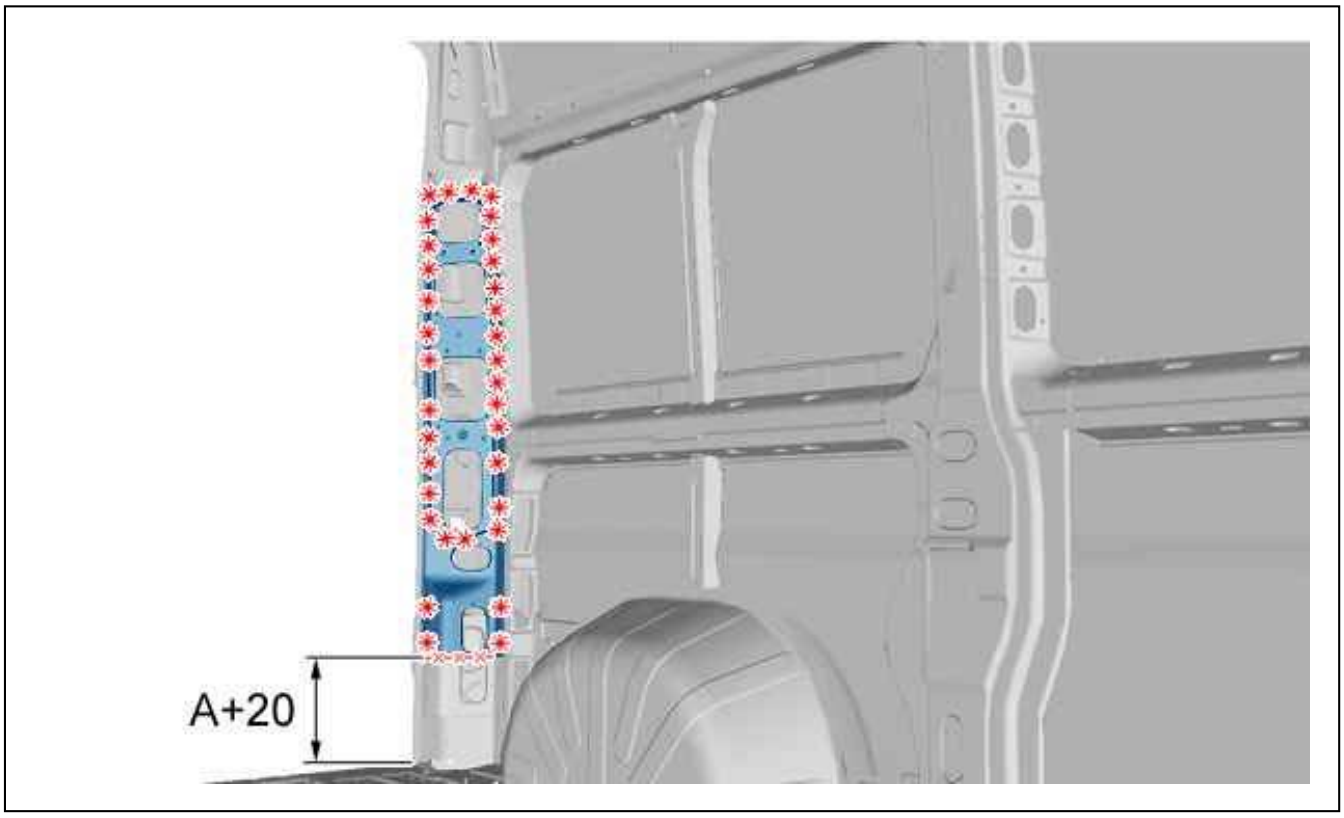

Figure : C4CP1W0D

Figure 6.
Mark then cut (preliminary cut).
Cut out the spot welds .
Remove the part C post inner panel.

5. Bodywork cleaning and preparation

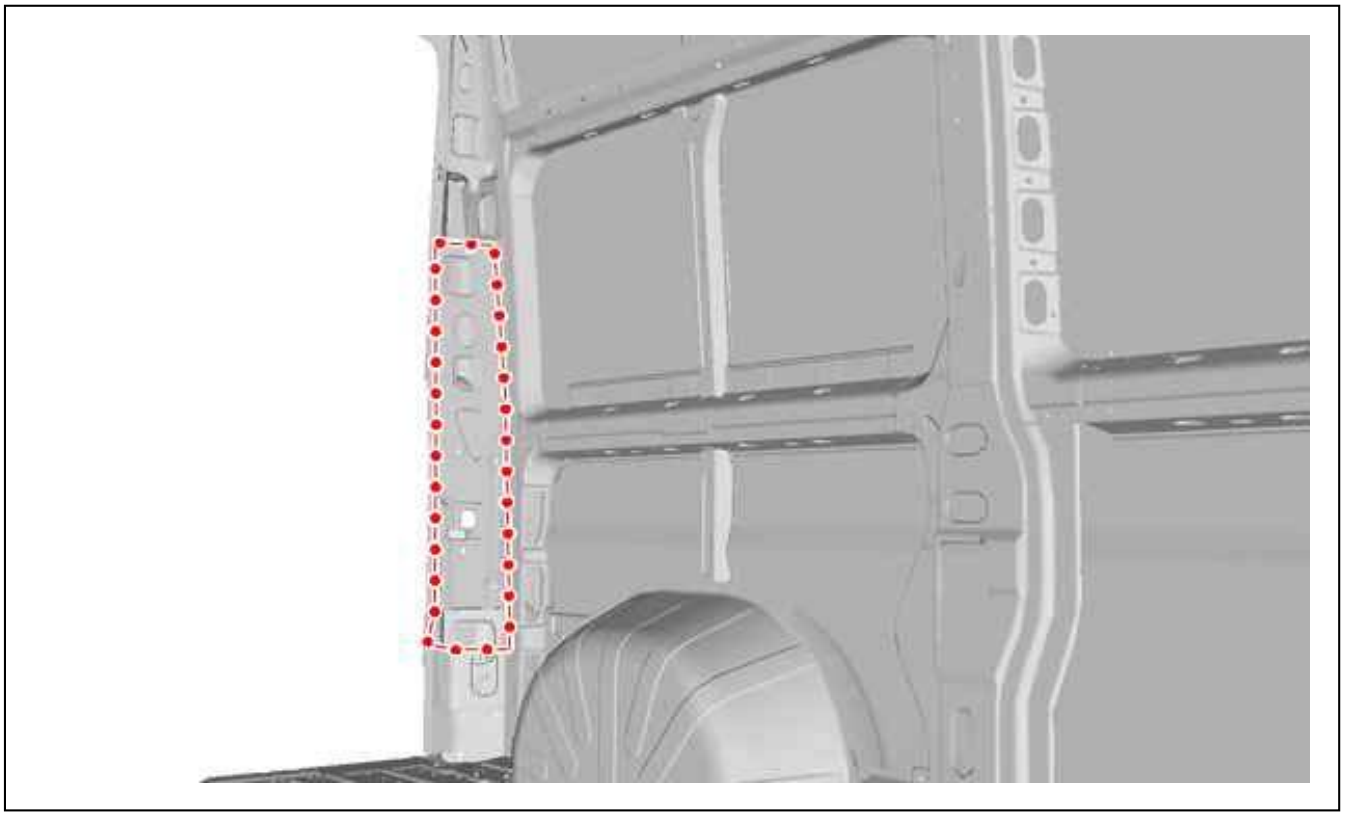

Figure : C4CP1W1D

Figure 7.
Prepare the mating edges .
Align the mating edges and protect them with a weldable primer.

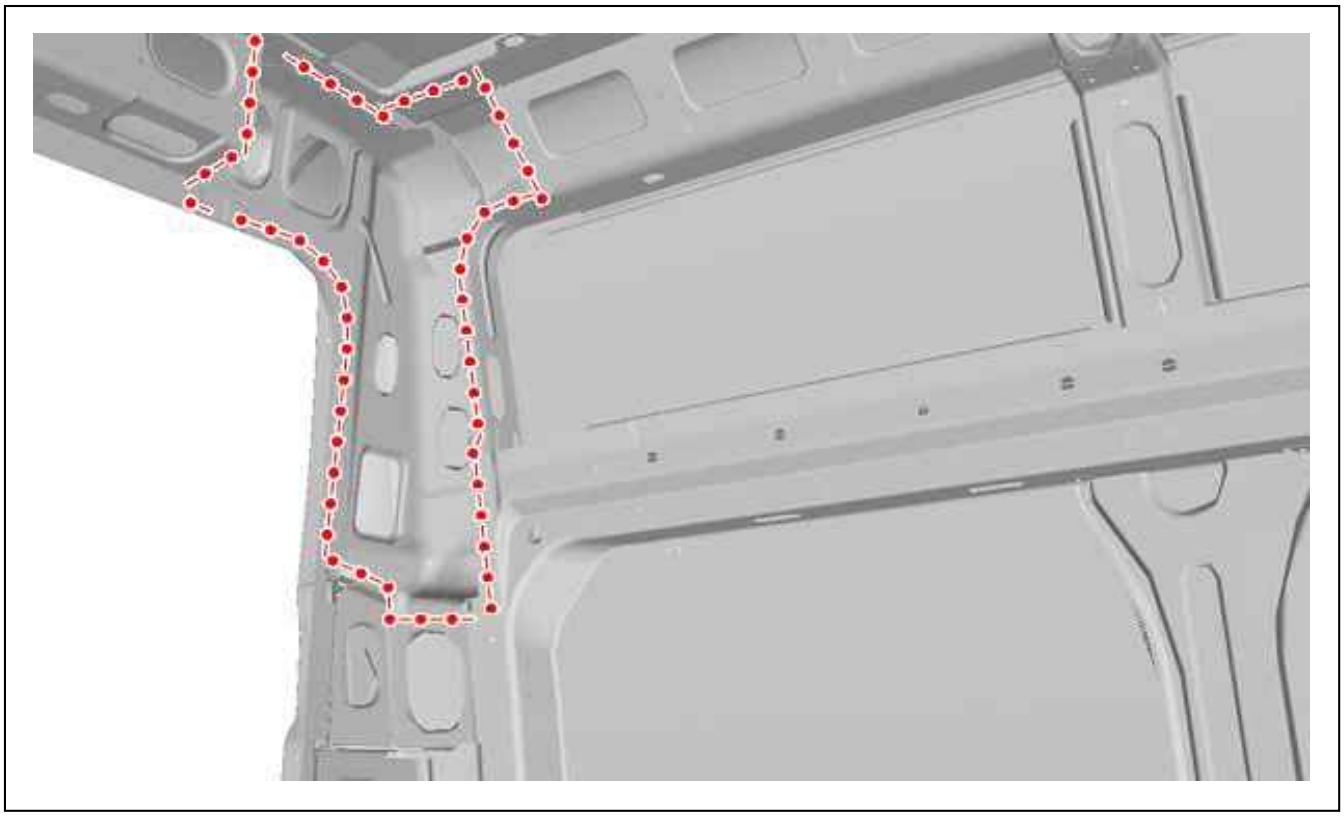

Figure : C4CP1W2D

Figure 8.
Prepare the mating edges .
Align the mating edges and protect them with a weldable primer.

6. Adjustment

Present the elements, allowing for adjustment.
Check the fits and clearances (see the relevant operation).

7. Welding

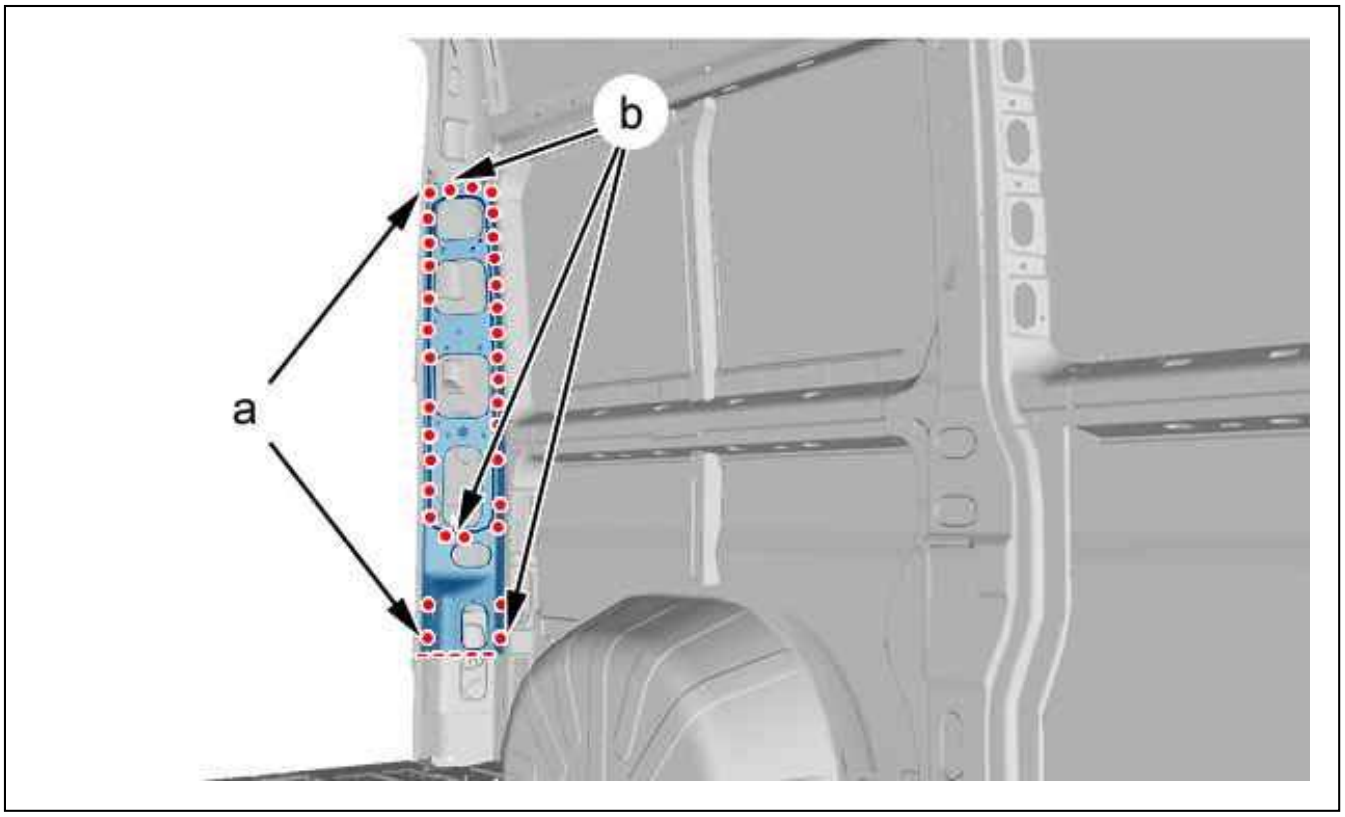

Figure : C4CP1W3D

Figure 9.
Weld using successive beads (MIG or MAG).
Grind the welds.
Weld with electric spot welds (at "a").
Weld with plug welds (MIG or MAG) (at "b").
Grind the spot welds.

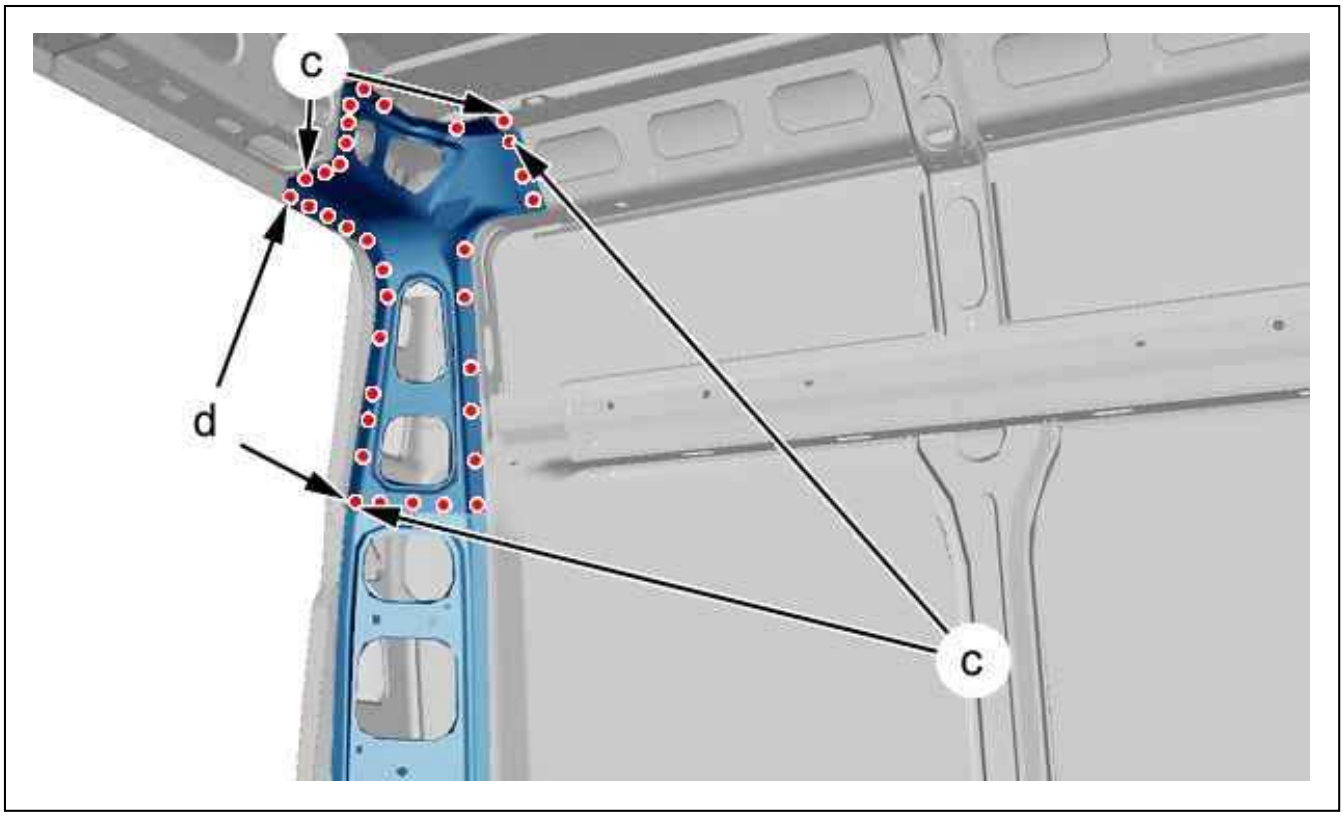

Figure : C4CP1W4D

Figure 10.
Weld with plug welds (MIG or MAG) (at "c").
Grind the spot welds.
Weld with electric spot welds (at "d").

8. Protection

Paint then spray into the hollow sections, product index C5, in the repair zone (see the relevant operation).

9. Reinitialisation

Reconnect the battery.

ESSENTIAL : Perform the operations to be carried out following reconnection of the battery.

REPLACEMENT : REAR DOOR HINGE LOWER STRENGTHENER ASSEMBLY

ESSENTIAL : All of the stripped surfaces must be protected by means of the approved electrolytic rezincing process (see the relevant operation).

ESSENTIAL : Observe the elementary rules of hygiene and safety (wear a face mask to protect against fumes and vapour - work in a well ventilated space).

1. Additional operations

Disconnect the battery.
Replacement :

- Rear bumper
- Rear door bottom hinge

Removing - Refitting :

- Rear door
- Tail lamp

Release the wiring harnesses.

2. Identification of replacement parts

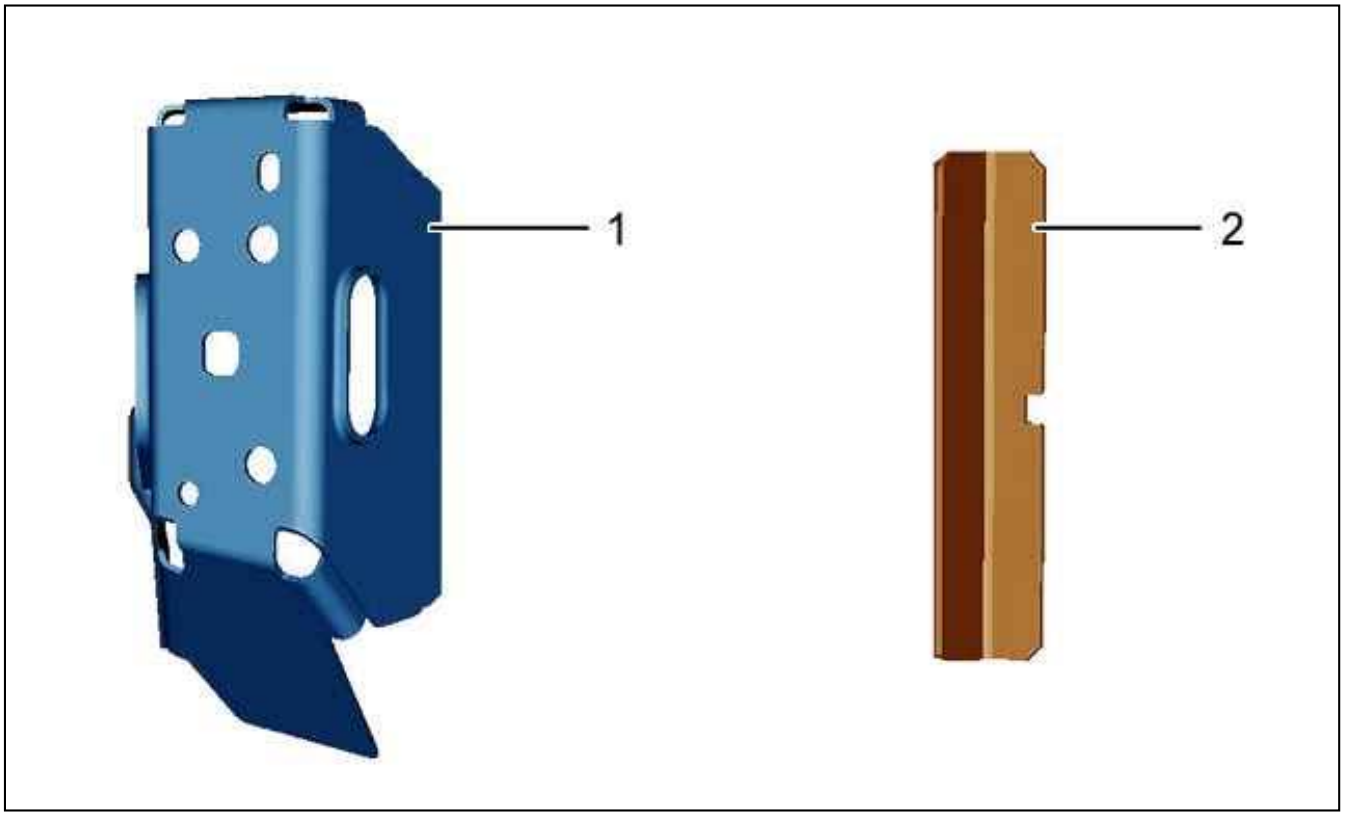

Figure : C4CP1U2D

Figure 1.

(1) Rear door hinge lower strengthener.
(2) Door hinge lower strengthener plate.

3. Preparation of the replacement parts

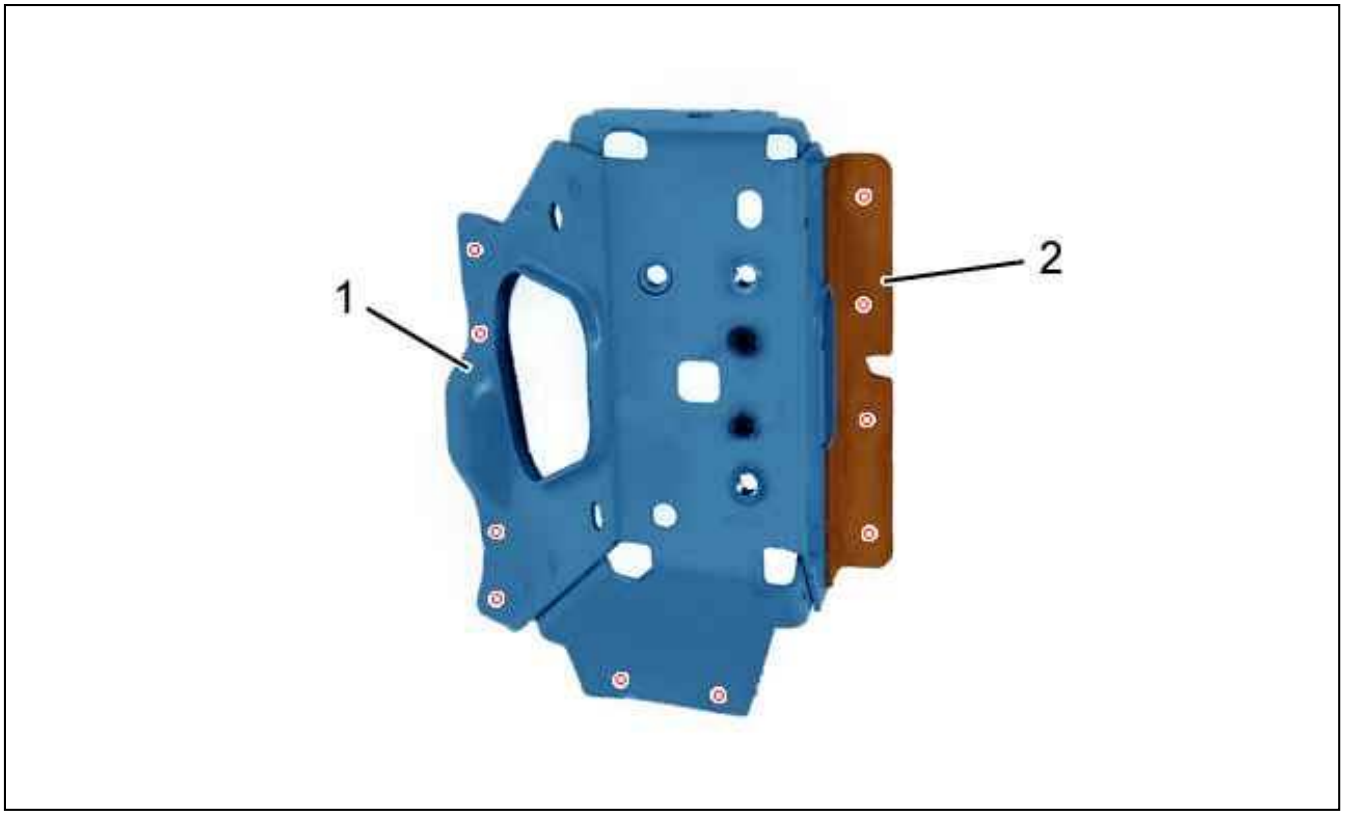

Figure : C4CP1U3D

Figure 2.
Assemble by spot welding :

- The rear door hinge lower strengthener (1)
- The door hinge lower strengthener plate (2)

Mark then drill to Ø 10 mm for later plug welding (10 holes).
Prepare the mating edges .

4. Cutting out



Figure : C4CP1U4D

Figure 3.
Cut out the spot welds .
Remove the rear door hinge lower strengthener assembly.

5. Bodywork cleaning and preparation

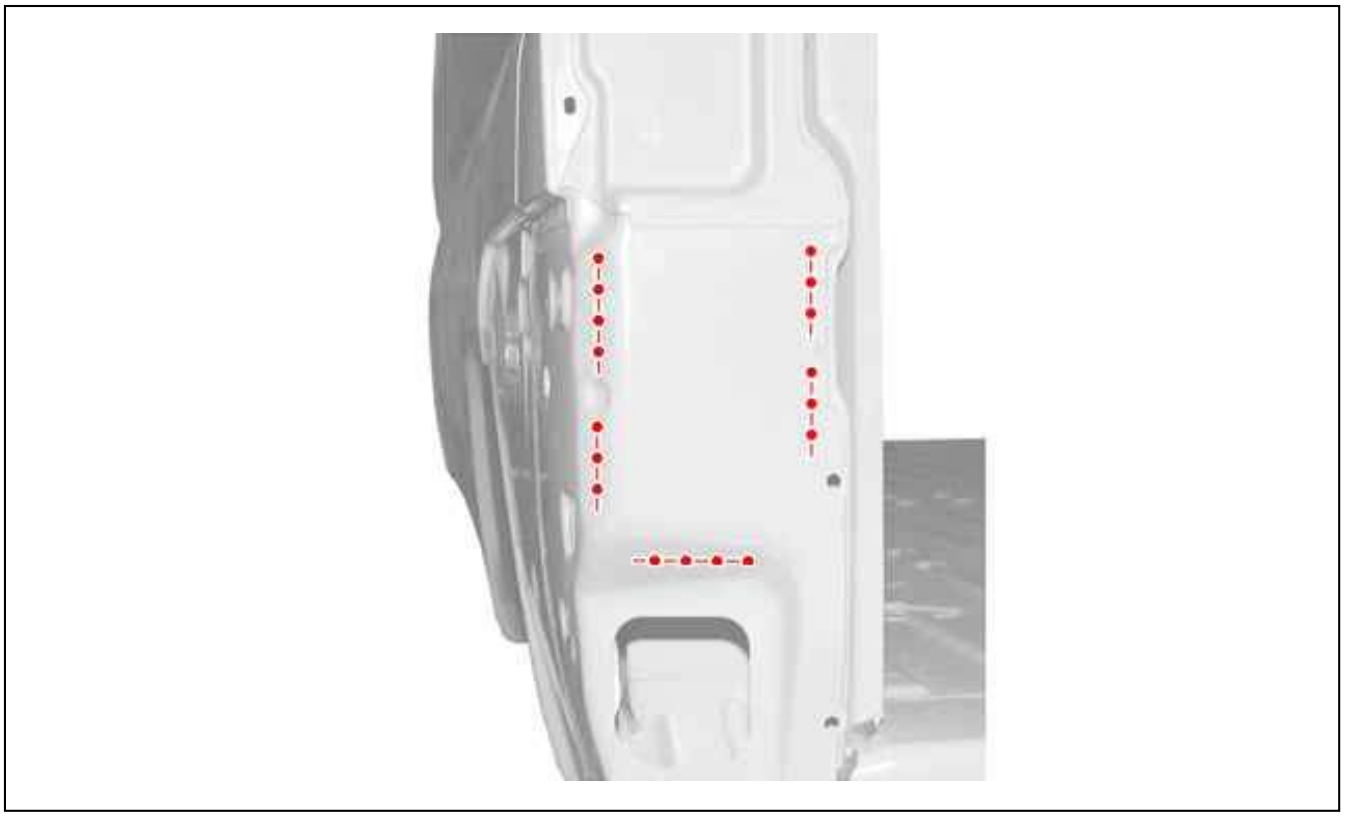

Figure : C4CP1U5D

Figure 4.
Prepare the mating edges .
Align the mating edges and protect them with a weldable primer.

6. Adjustment

Present the component for adjustment.
Check the fits and clearances (see the relevant operation).

7. Welding

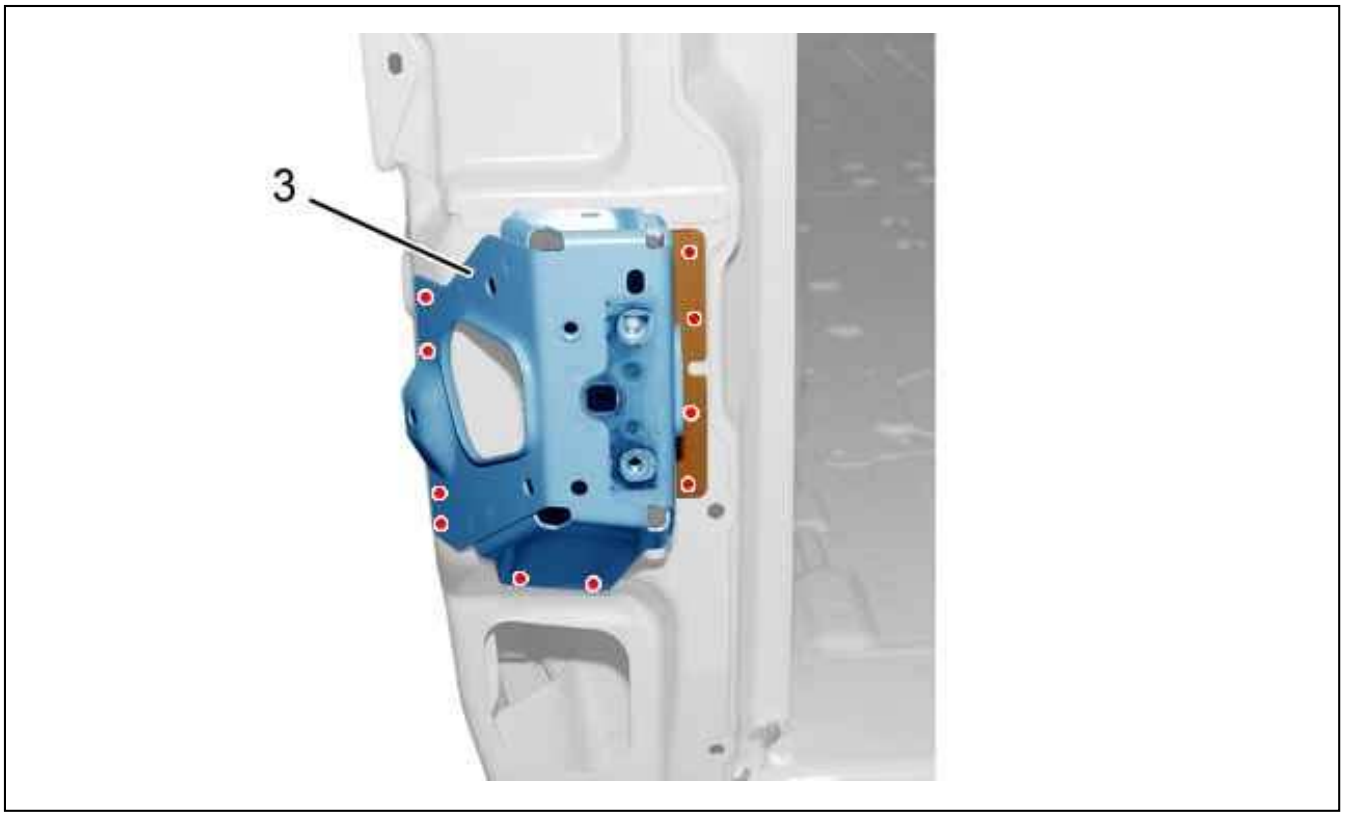

Figure : C4CP1U6D

Figure 5.
Fit the door hinge lower strengthener assembly (3).
Weld with MIG or MAG spot welds.
Grind the spot welds.

8. Sealing



Figure : C4CP1U7D

Figure 6.
Apply a phosphate-print layer on the zone laid bare.
Apply a sealing mastic of type " A4" (see the relevant operation).

9. Protection

Paint then spray into the hollow sections, product index C5, in the repair zone (see the relevant operation).

10. Reinitialisation

Reconnect the battery.

ESSENTIAL : Perform the operations to be carried out following reconnection of the battery.

REPLACEMENT : REAR PILLAR ASSEMBLY

ESSENTIAL : All of the stripped surfaces must be protected by means of the approved electrolytic rezincing process (see the relevant operation).

ESSENTIAL : Observe the elementary rules of hygiene and safety (wear a face mask to protect against fumes and vapour - work in a well ventilated space).

1. Additional operations

Disconnect the battery.
Replacement :

- C post upper inner panel and part C post inner panel (see the relevant operation)
- Partial rear side panel rear inner panel (see the relevant operation)

Release the wiring harnesses.

2. Identification of the replacement parts



Figure : C4CP1ZBD

Figure 1.
(1) Rear pillar assembly.

3. Composition of the replacement parts

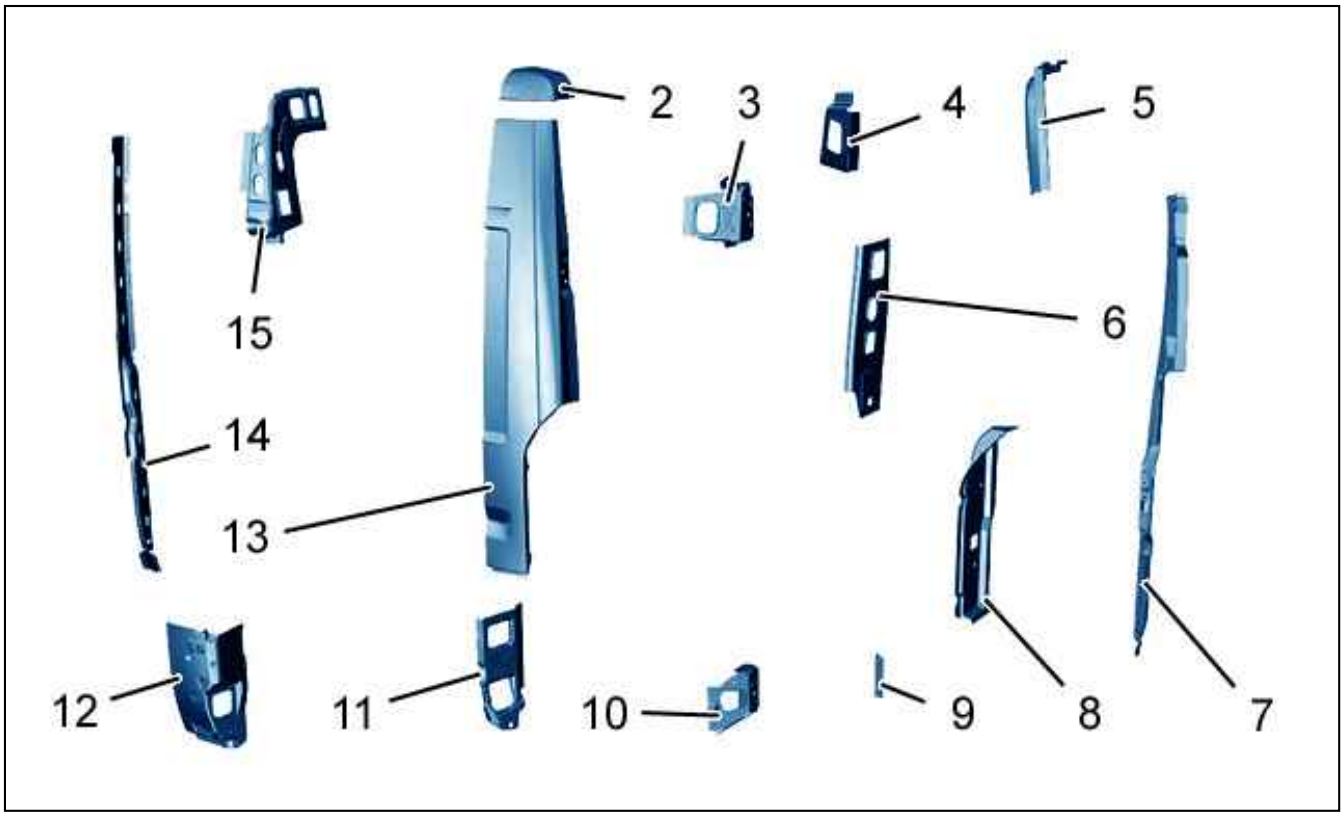

Figure : C4CP1ZCD

Figure 2.
(2) Upper rear corner panel.
(3) Door hinge upper strengthener .
(4) Door hinge upper strengthener plate .
(5) Upper door frame pillar .
(6) Rear corner intermediate panel strengthener .
(7) Rear door frame pillar .
(8) Rear lamps housing.
(9) Door hinge lower strengthener plate.
(10) Door hinge lower strengthener .
(11) Inner lower panel .
(12) Lower rear corner panel.
(13) Rear corner intermediate panel .
(14) Rear side panel connection panel .
(15) Rear pillar upper bracket.

4. Preparation of the replacement parts

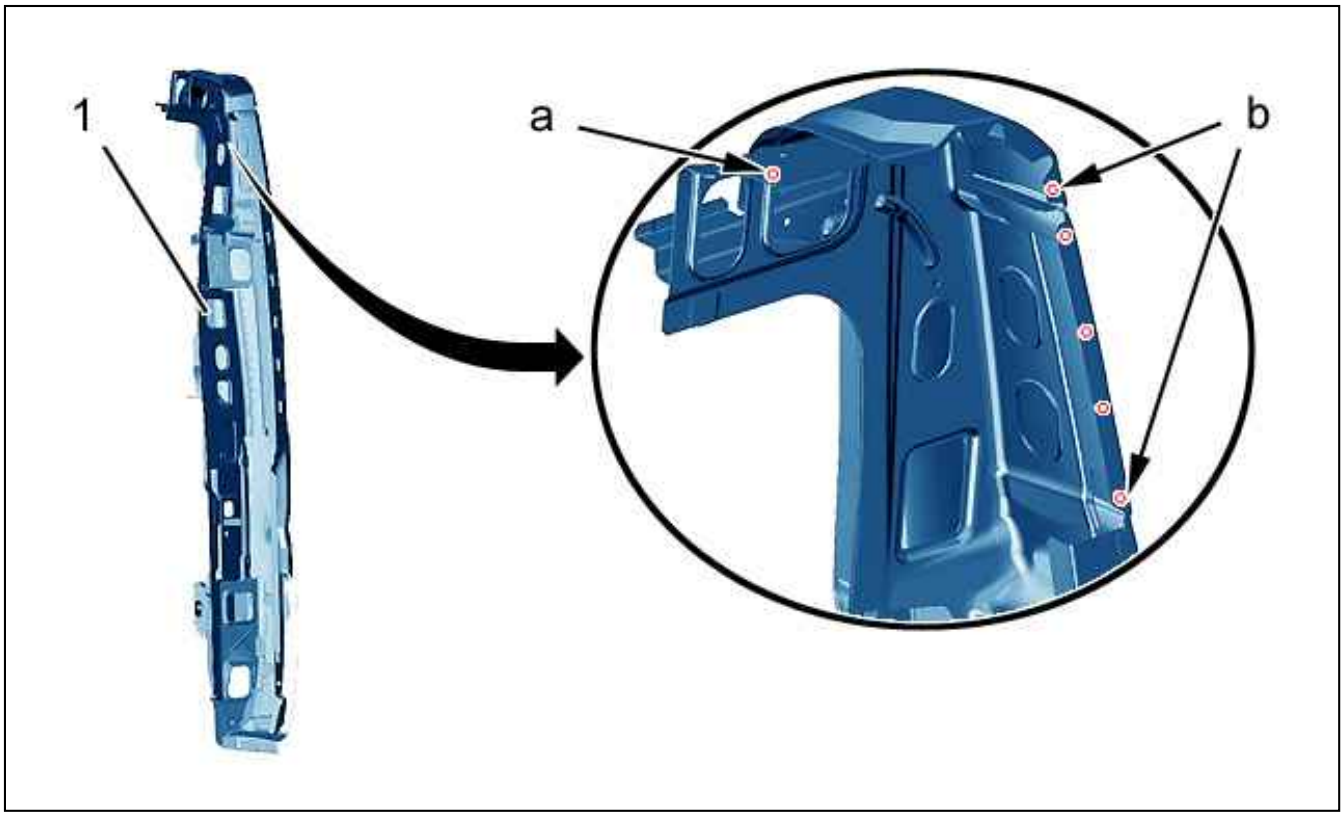

Figure : C4CP1ZDD

Figure 3.
(1) Rear pillar assembly.
Mark then drill to Ø 8 mm for later plug welding (at "a") (1 hole).
Mark then drill to Ø 6 mm for later plug welding (at "b") (5 holes).
Prepare the mating edges .

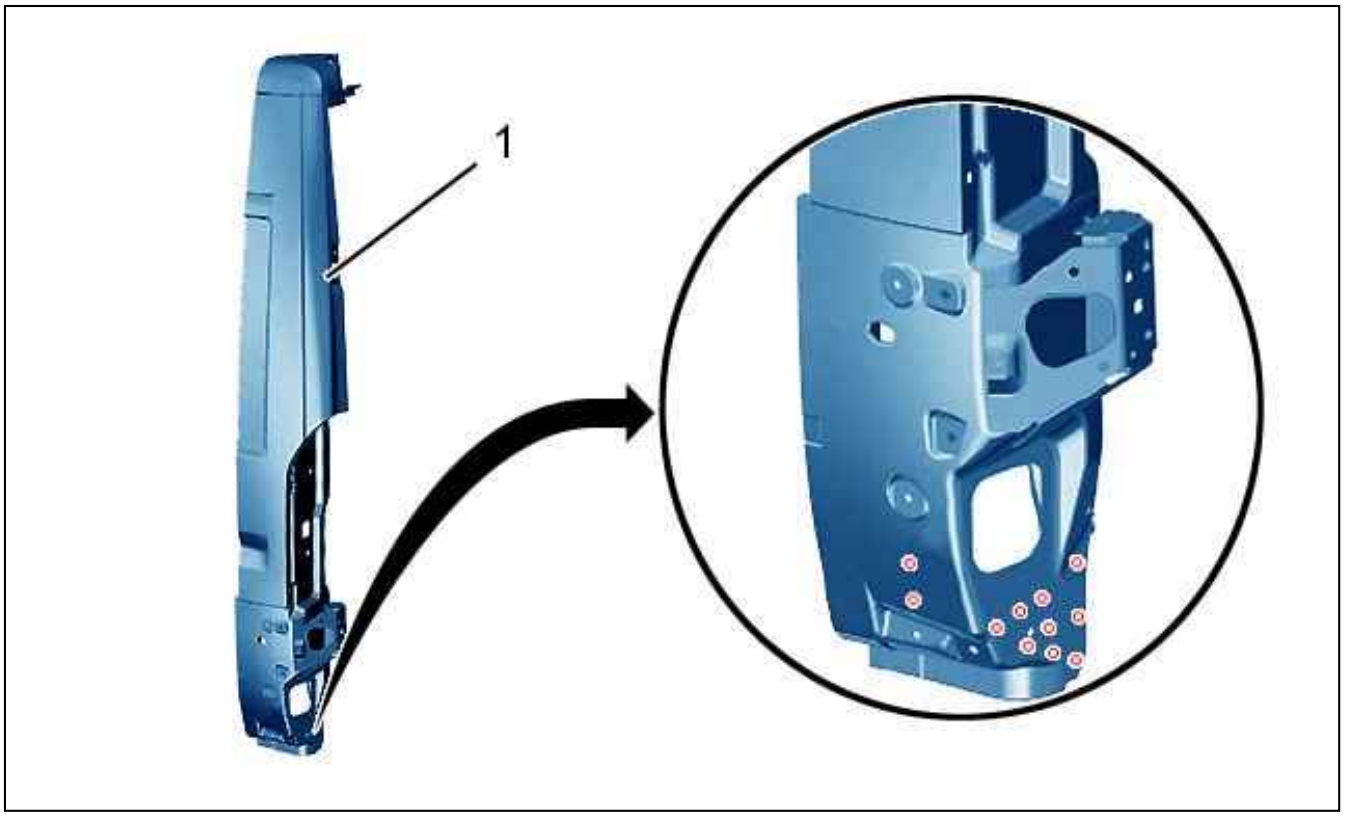

Figure : C4CP1ZED

Figure 4.
(1) Rear pillar assembly.
Mark then drill to Ø 8 mm for later plug welding (11 holes).
Prepare the mating edges .

5. Cutting out



Figure : C4CP1ZFD

Figure 5.
Cut out the spot welds .



Figure : C4CP1ZGD

Figure 6.

Cut out the spot welds .



Figure : C4BP1TWD

Figure 7.
Cut out the spot welds .

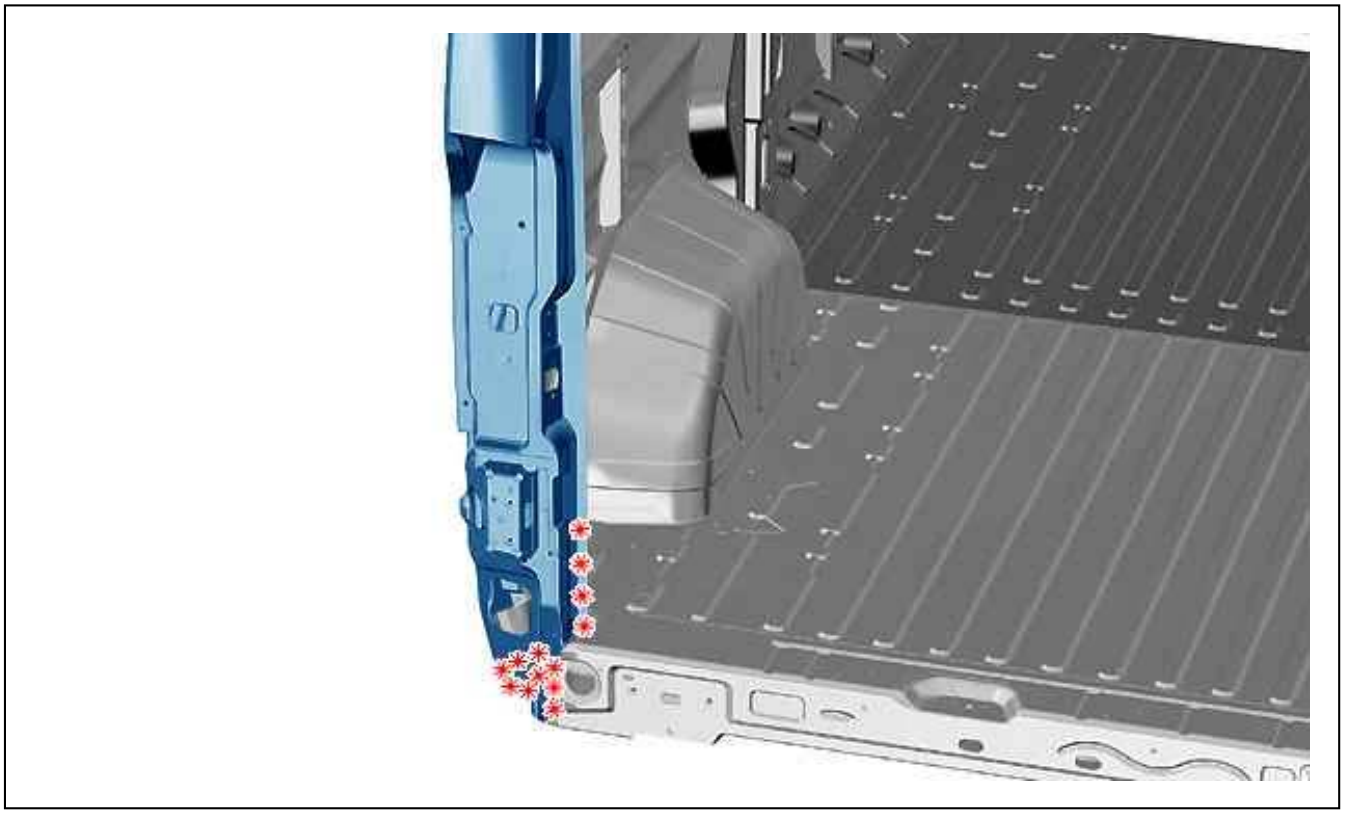

Figure : C4BP1TXD

Figure 8.
Cut out the spot welds .

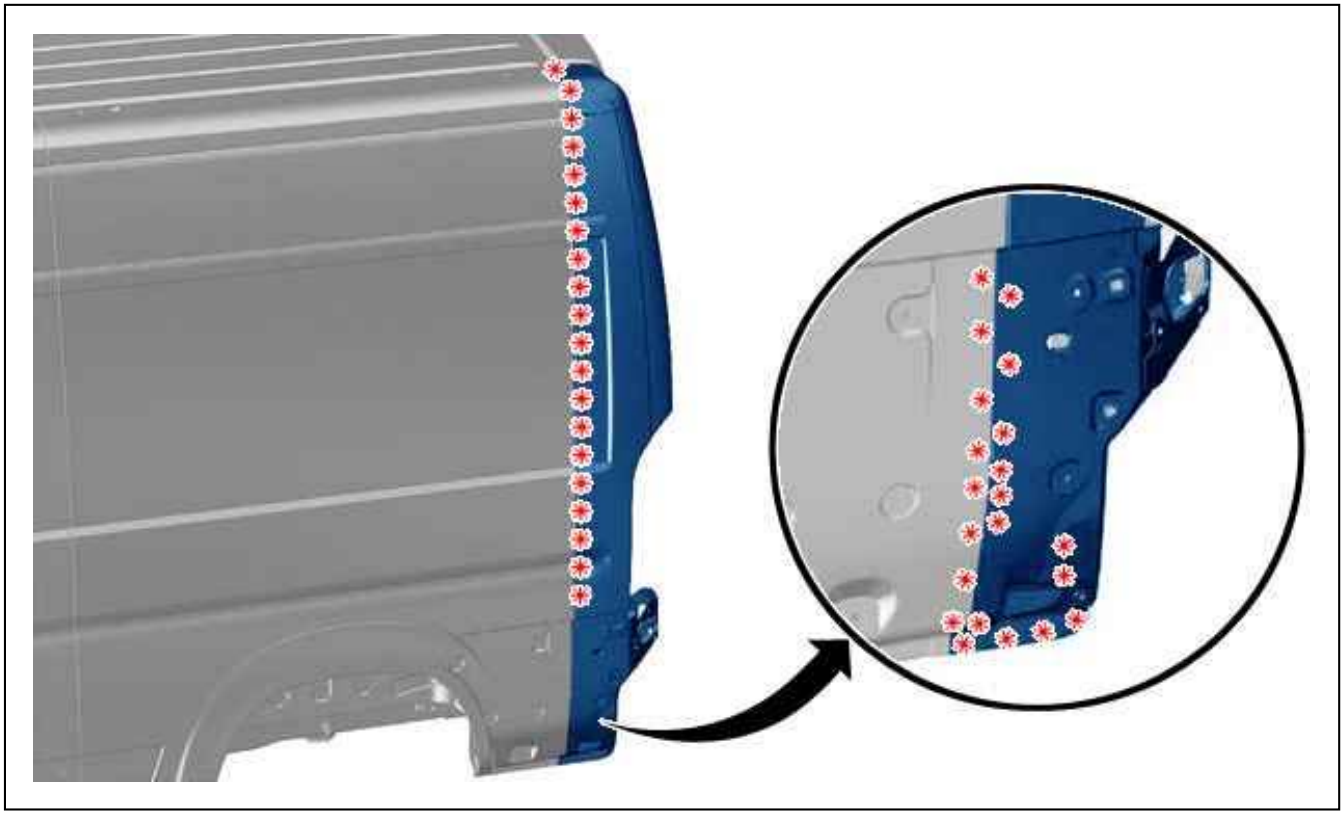

Figure : C4CP1ZHD

Figure 9.
Cut the rear pillar assembly at approximately 1 cm to facilitate the unhooking of the spot weld lines.
Cut out the spot welds .



Figure : C4BP1TYD

Figure 10.
Cut out the spot welds .
Remove the rear pillar assembly .

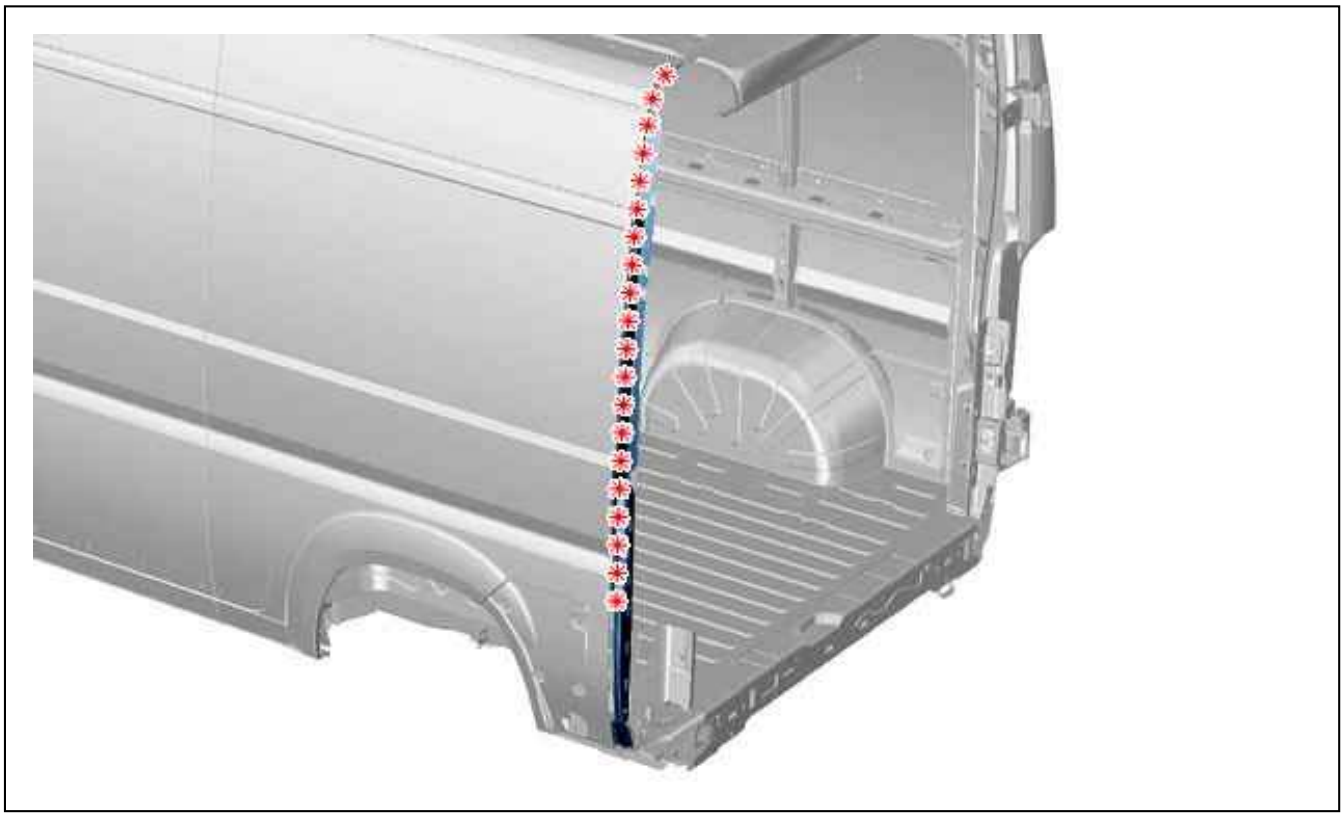

Figure : C4CP1ZJD

Figure 11.
Cut out the spot welds .
Remove the remaining part of the rear pillar assembly .

6. Bodywork cleaning and preparation

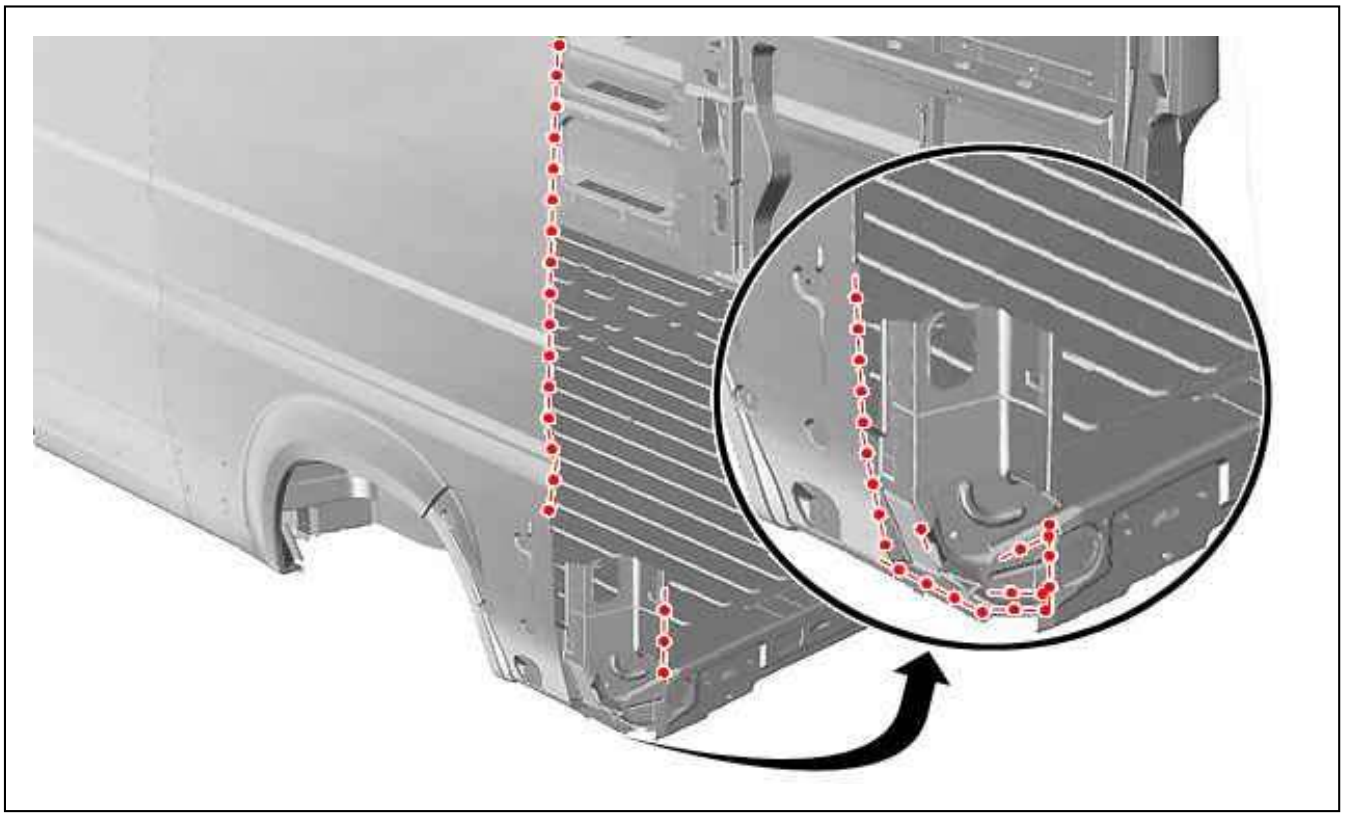

Figure : C4BP1TZD

Figure 12.
Prepare the mating edges .
Align the mating edges and protect them with a weldable primer.

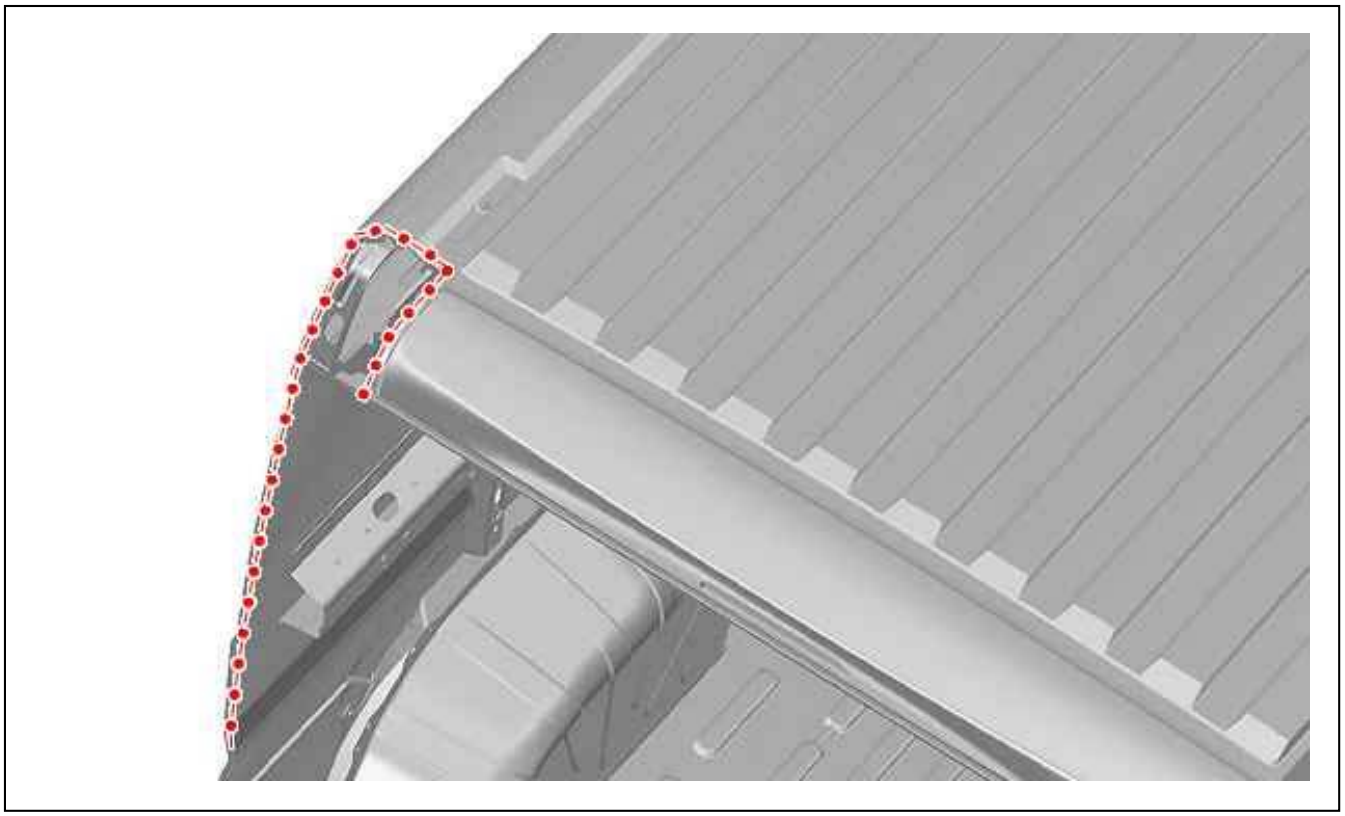

Figure : C4BP1U0D

Figure 13.
Prepare the mating edges .
Align the mating edges and protect them with a weldable primer.

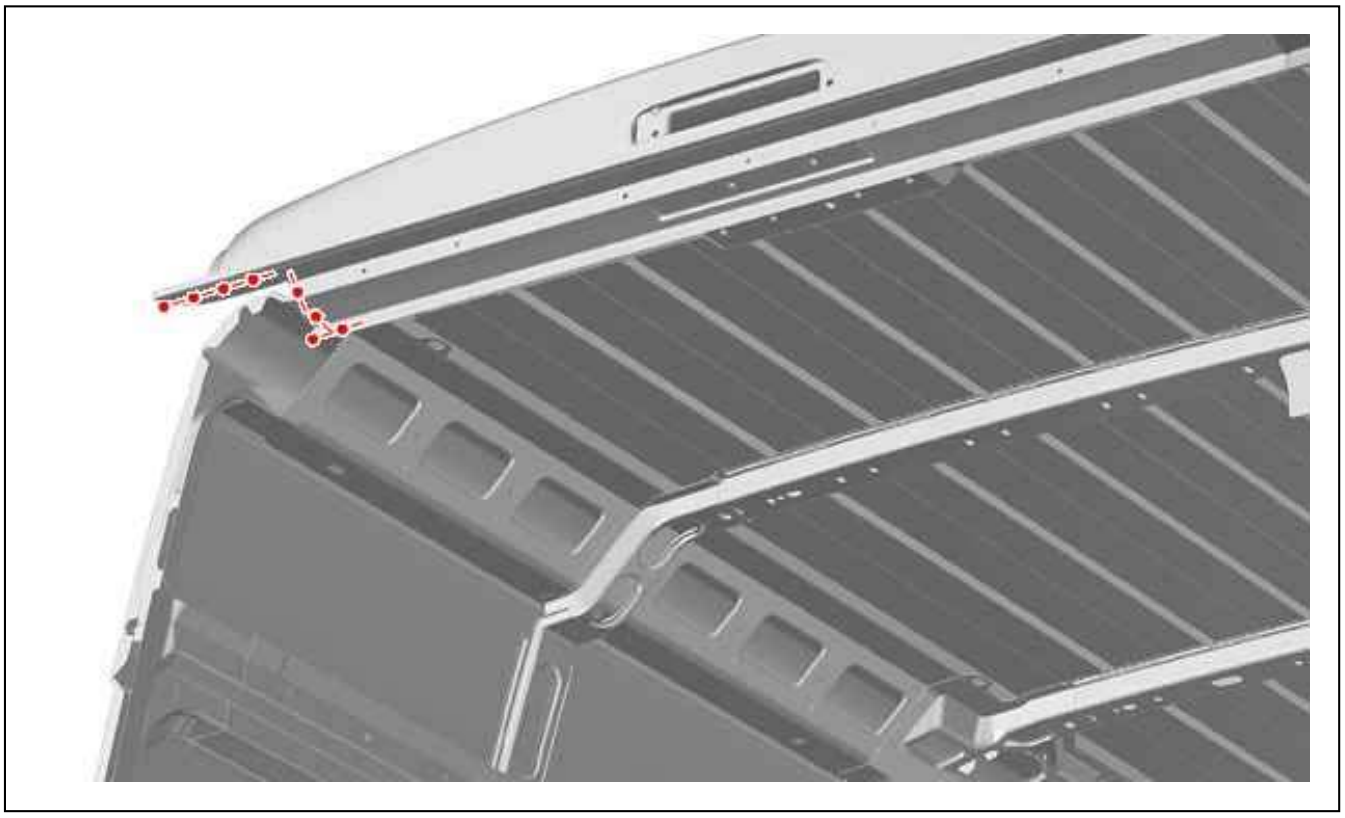

Figure : C4BP1U1D

Figure 14.
Prepare the mating edges .
Align the mating edges and protect them with a weldable primer.

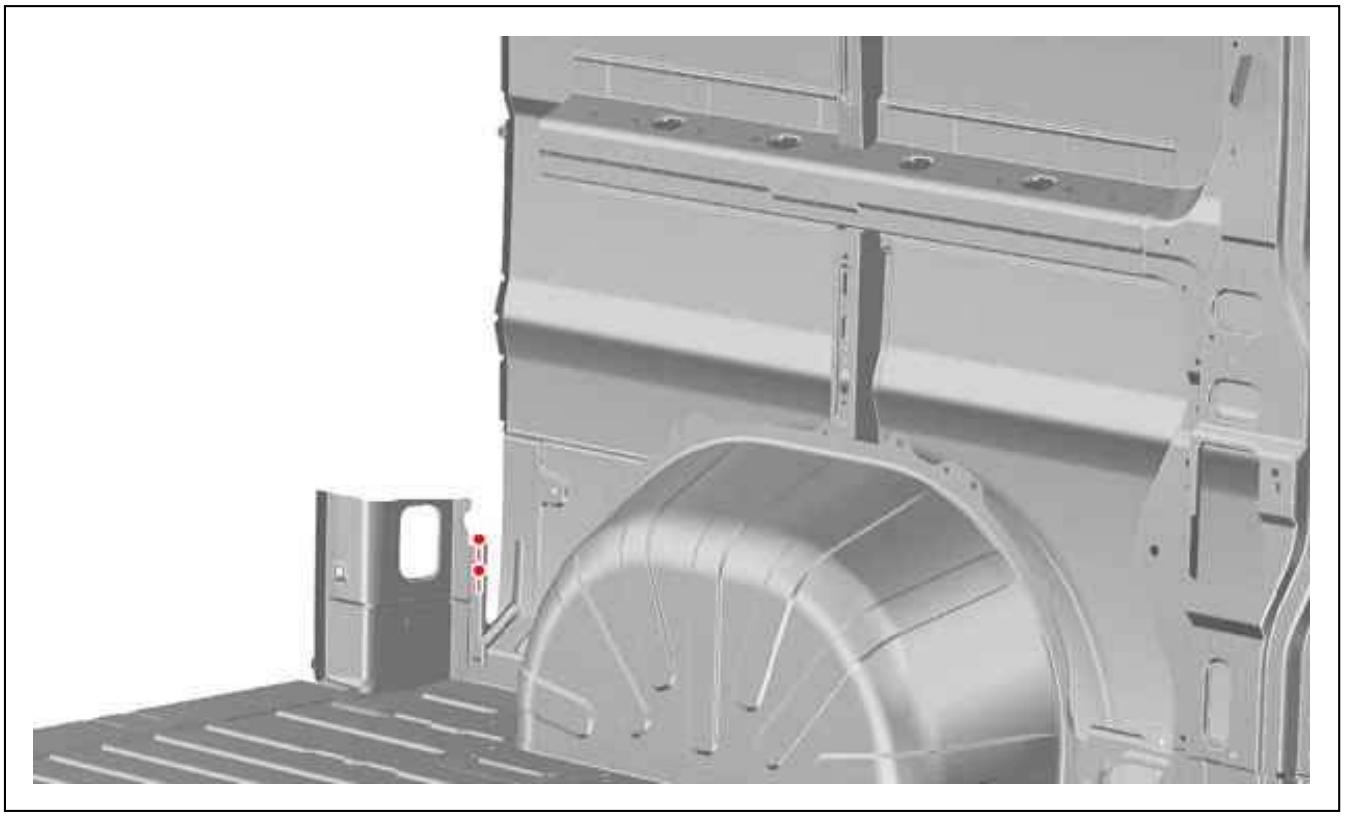

Figure : C4CP1ZKD

Figure 15.
Prepare the mating edges .
Align the mating edges and protect them with a weldable primer.

7. Adjustment

Present the elements, allowing for adjustment.
Check the fits and clearances (see the relevant operation).

8. Welding

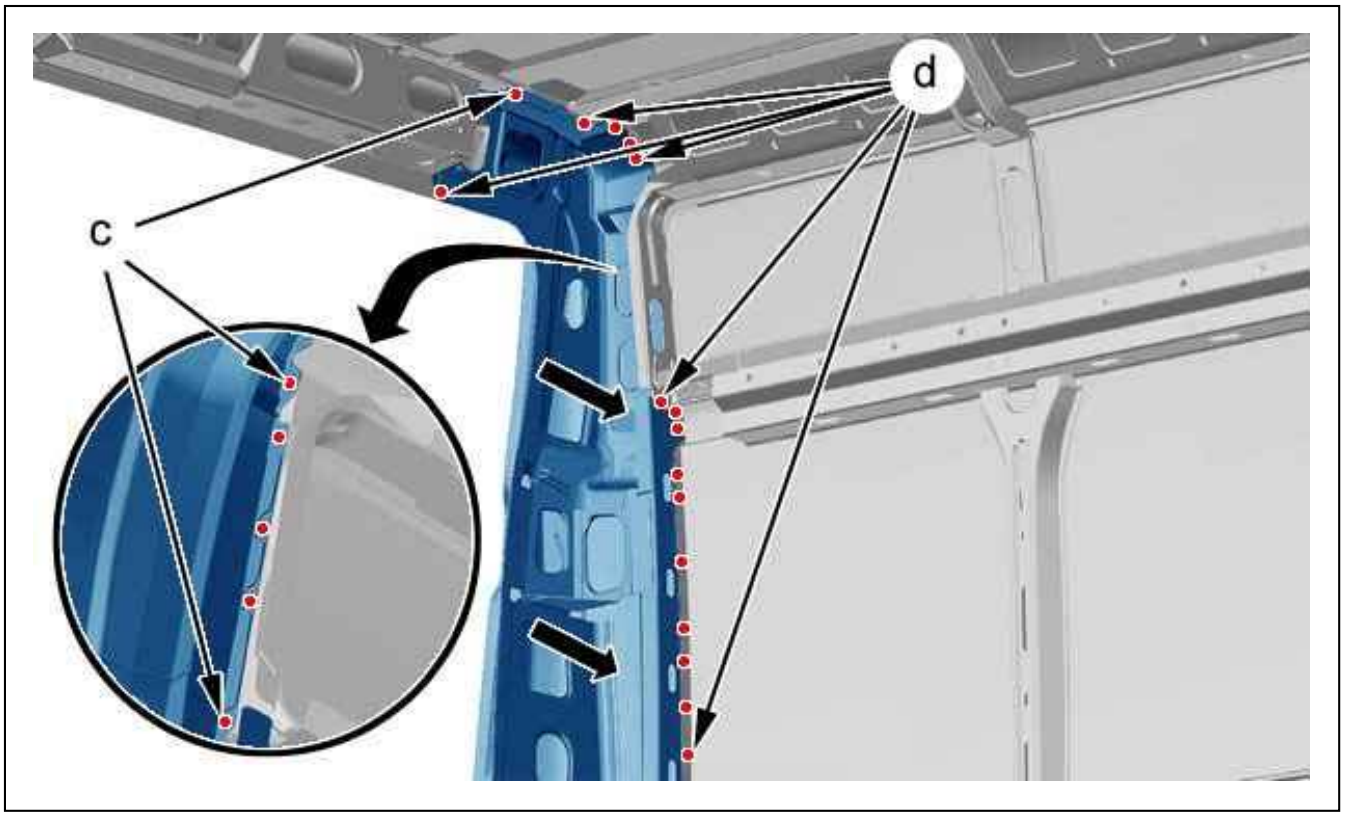

Figure : C4CP1ZLD

Figure 16.
Weld with MIG or MAG spot welds (at "c").
Grind the spot welds.
Weld with electric spot welds (at "d").

N.B. : Access is from the inside for the electric spot welding (as per arrows).

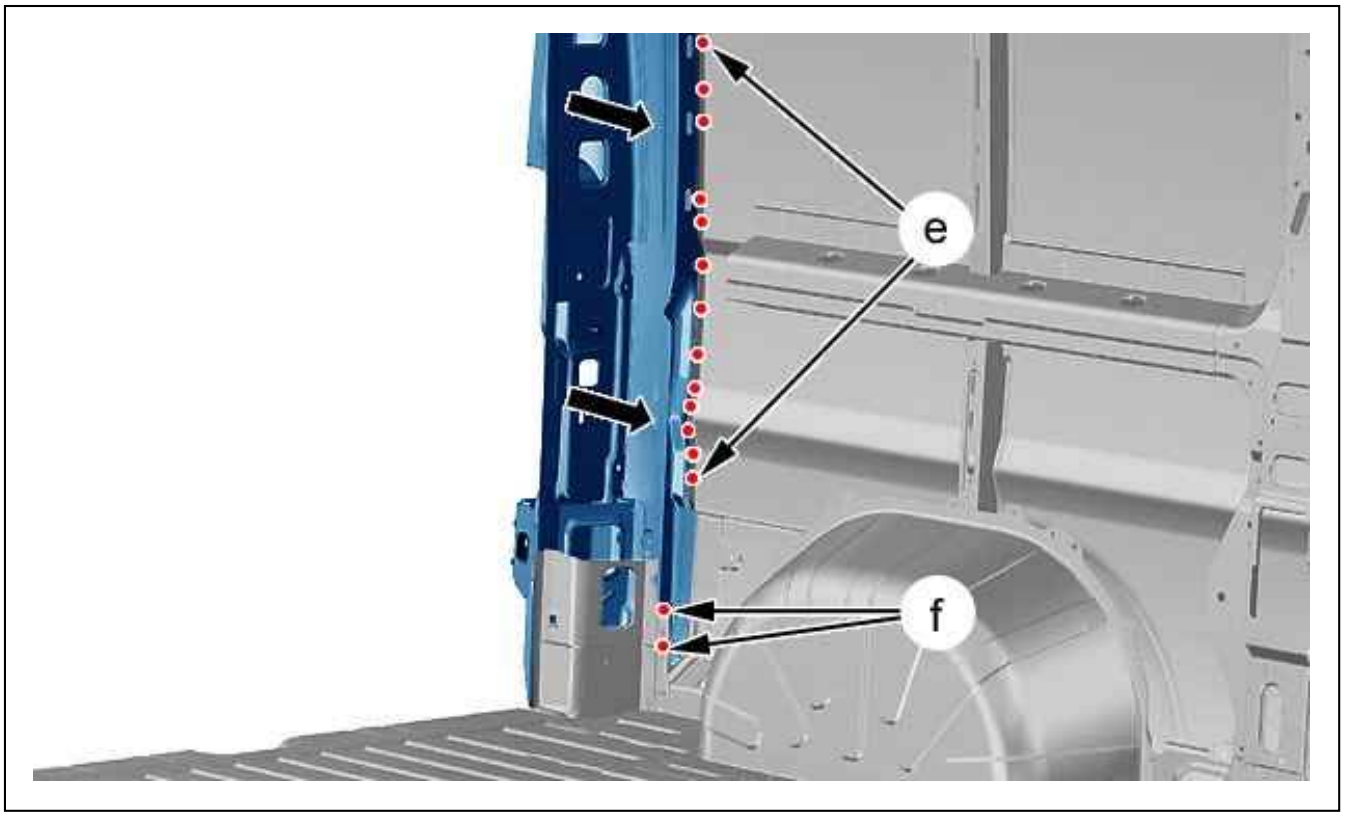

Figure : C4CP1ZMD

Figure 17.
Weld with electric spot welds (at "e").
Weld with MIG or MAG spot welds (at "f").
Grind the spot welds.

N.B. : Access is from the inside for the electric spot welding (as per arrows).



Figure : C4BP1U2D

Figure 18.
Weld with MIG or MAG spot welds.
Grind the spot welds.

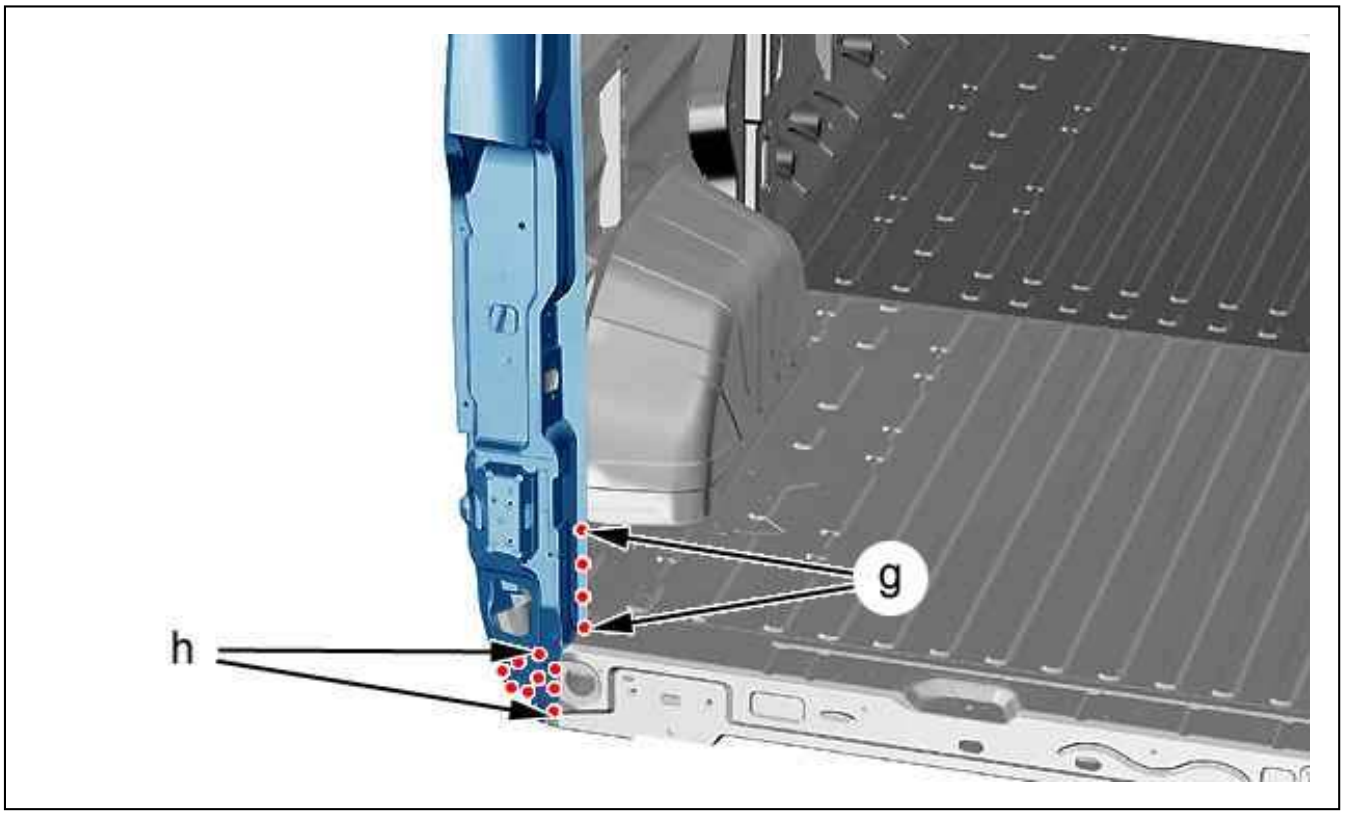

Figure : C4BP1U3D

Figure 19.
Weld with MIG or MAG spot welds (at "h").
Grind the spot welds.
Weld with electric spot welds (at "g").

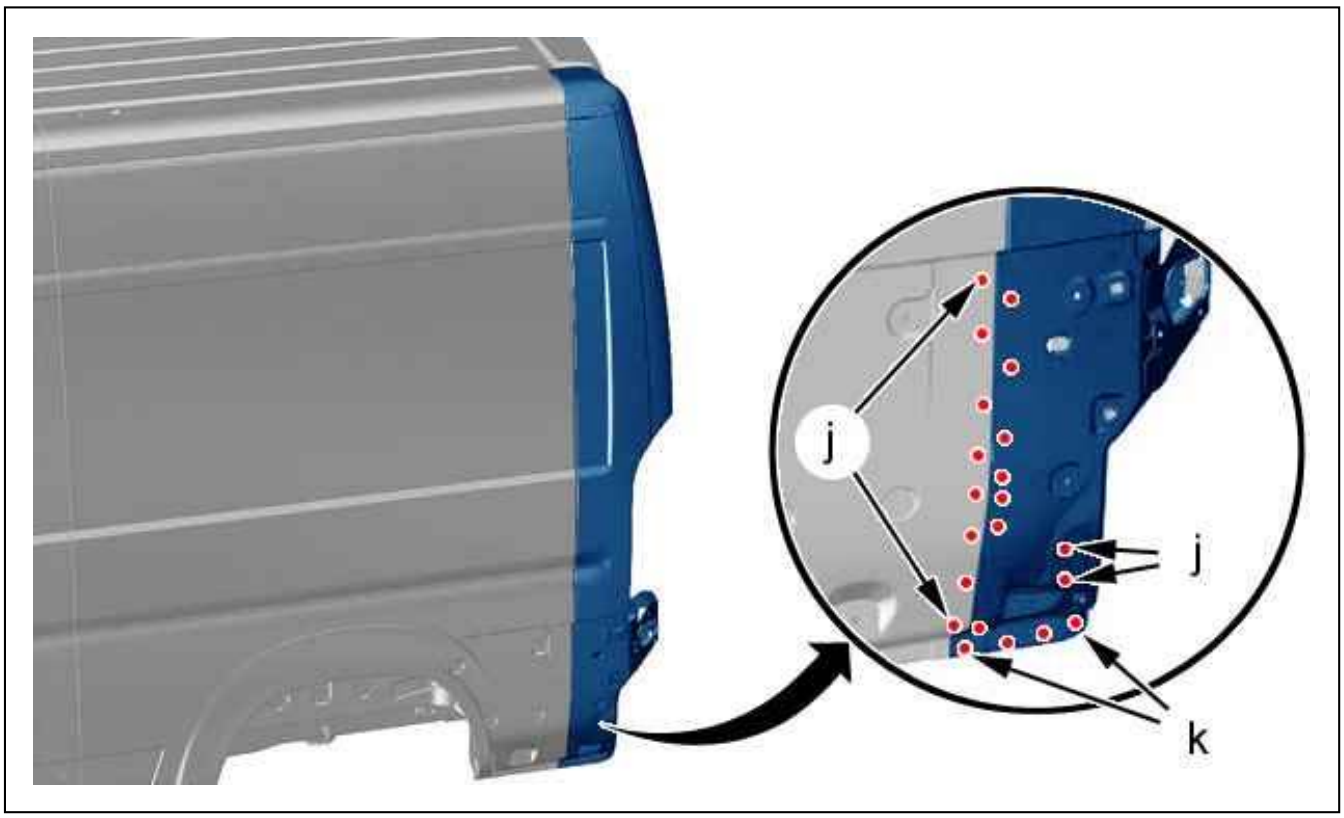

Figure : C4CP1ZND

Figure 20.
Weld with MIG or MAG spot welds (at "j").
Grind the spot welds.
Weld with electric spot welds (at "k").



Figure : C4BP1U4D

Figure 21.
Weld with MIG or MAG spot welds.
Grind the spot welds.

9. Sealing

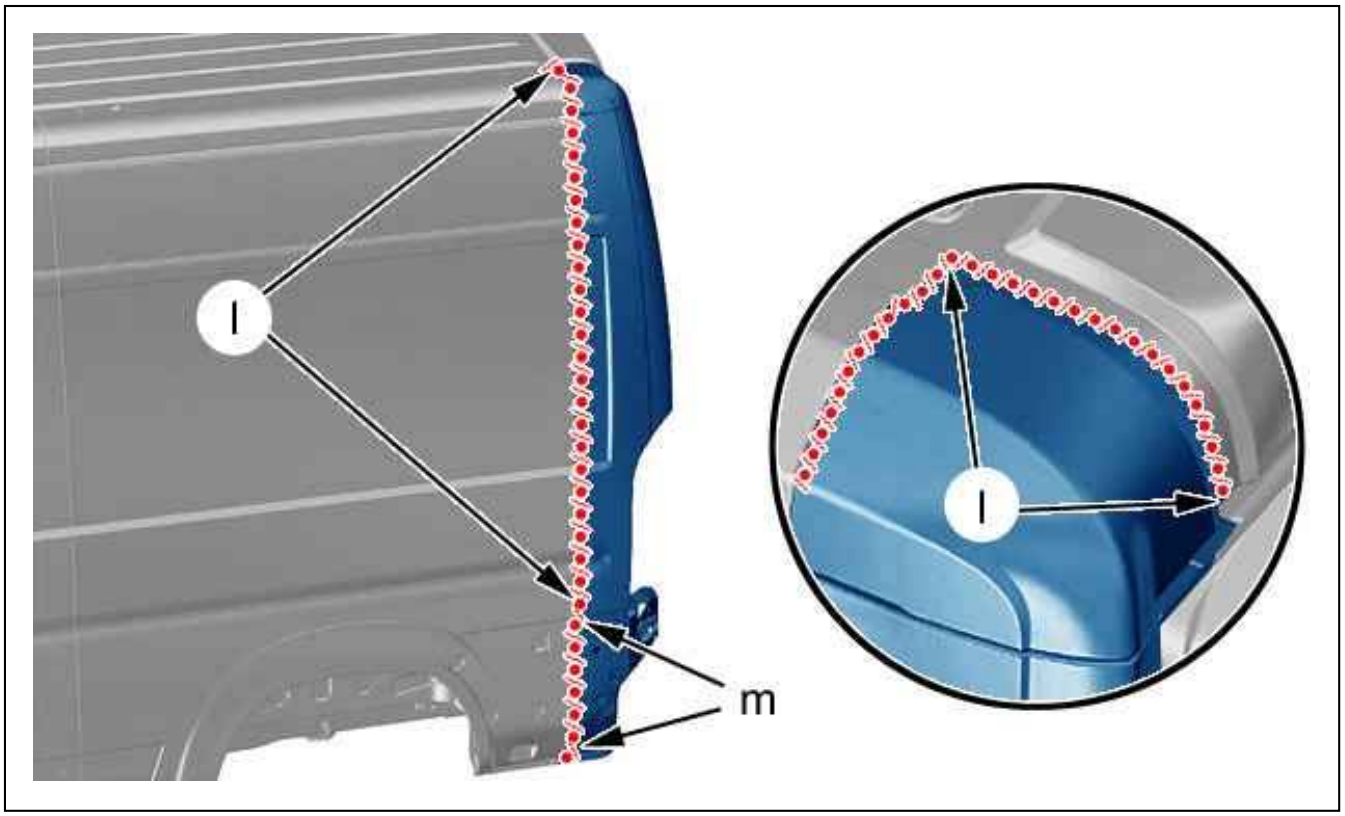

Figure : C4CP1ZPD

Figure 22.
Apply a phosphate-print layer on the zone laid bare.
Apply a sealing mastic of type " A4" (at "l") (see the relevant operation).
Apply a sealing mastic of type " A1" (at "m") (see the relevant operation).



Figure : C4BP1U5D

Figure 23.
Apply a phosphate-print layer on the zone laid bare.
Apply a sealing mastic of type " A4" (see the relevant operation).



Figure : C4BP1U6D

Figure 24.
Apply a phosphate-print layer on the zone laid bare.
Apply a sealing mastic of type " A4" (see the relevant operation).

10. Protection

Paint then spray into the hollow sections, product index C5, in the repair zone (see the relevant operation).

11. Reinitialisation

Reconnect the battery.

ESSENTIAL : Perform the operations to be carried out following reconnection of the battery.

STRIPPING - RE-ASSEMBLING : REAR RIGHT DOOR

1. Recommended tools

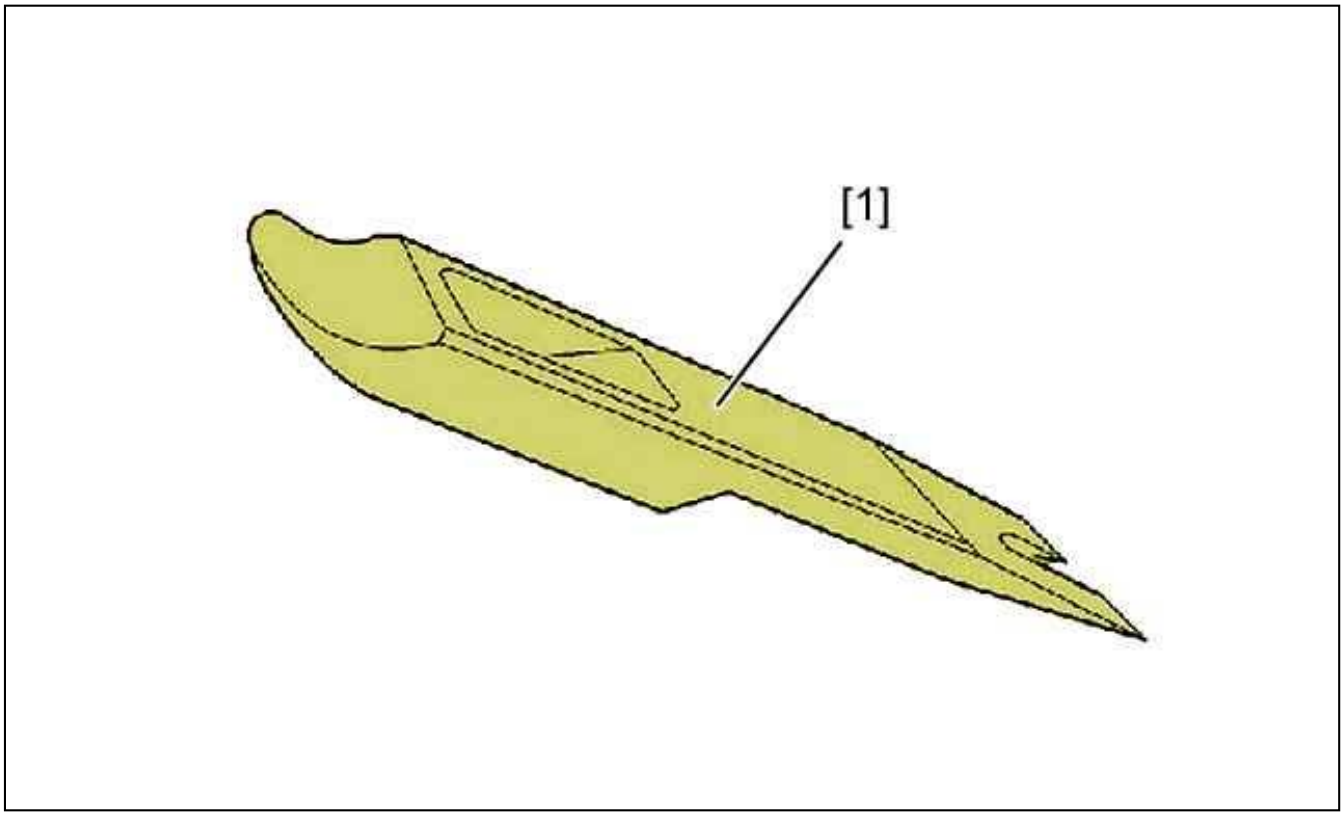

Figure : E5AP2THD

Reference	Designation	Reference
[1]	Unclipping lever	(-).1330-E
	Tool for removing side mouldings	8205-T.E

2. Stripping

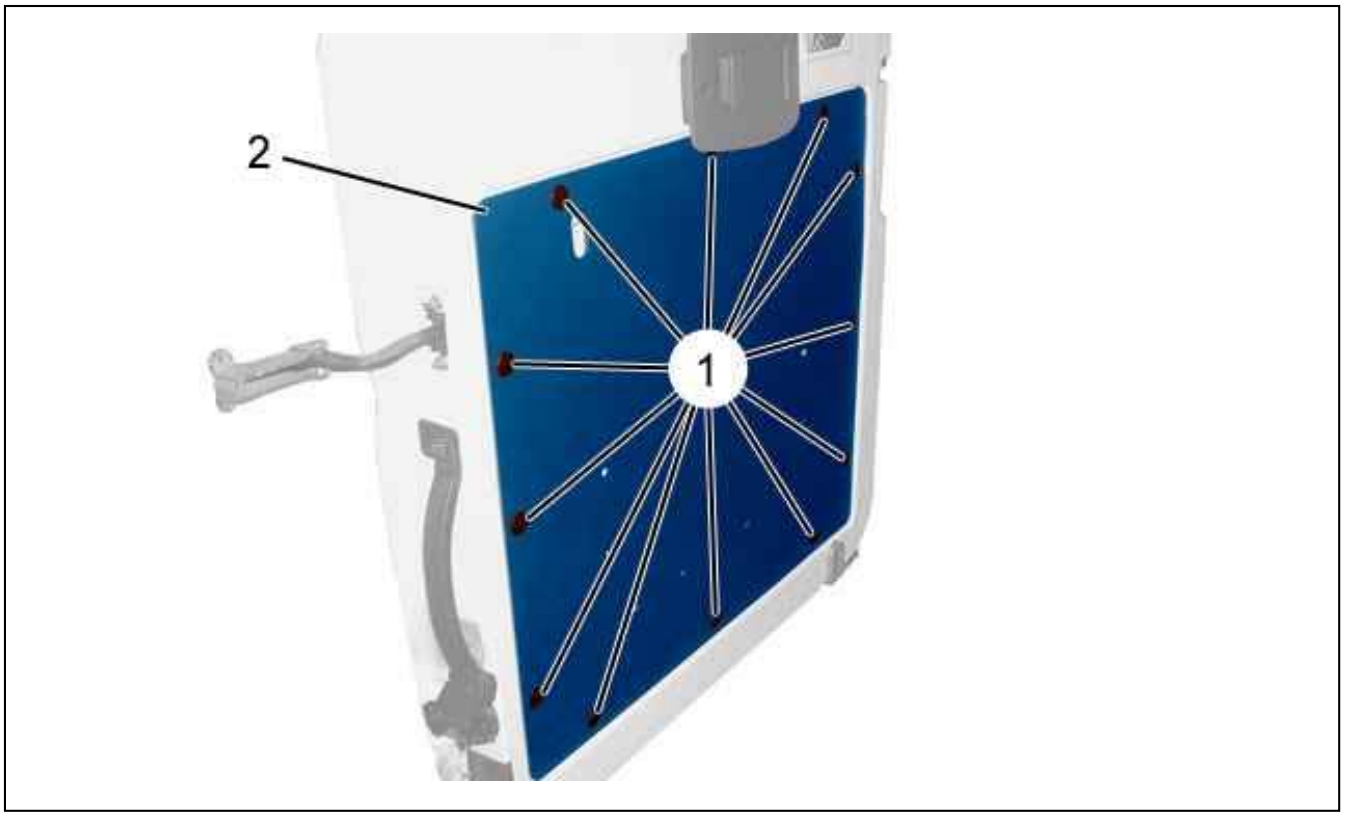

Figure : C5GP0MYD

Unclip the clips (1) ; Using tool [1].
Remove the trim (2).

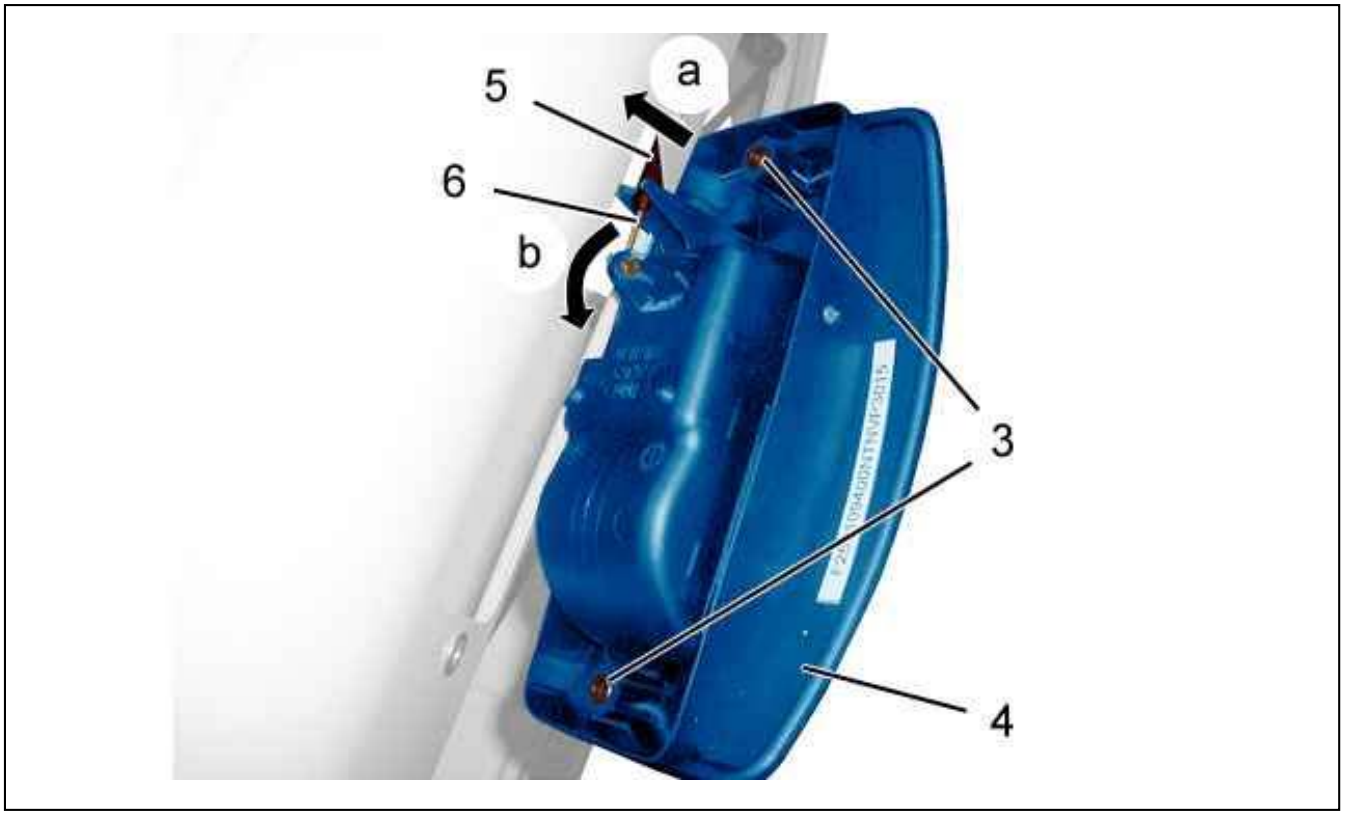

Figure : C5DP06ED

Remove :

- The screws (3) of the handle (4)
- The cable guide (5) (following "a")

Pivot the cable (6) (following "b").
Remove the interior handle (4).

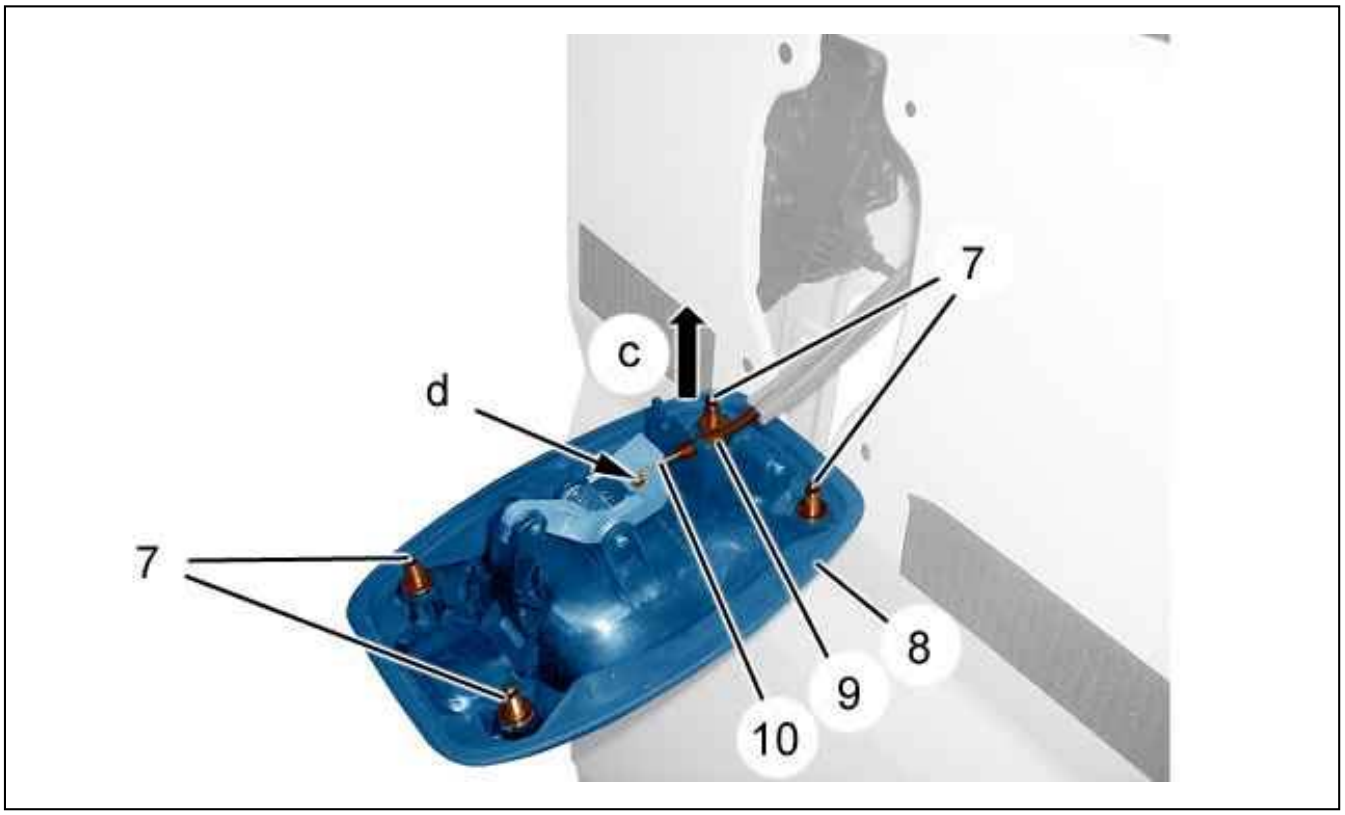

Figure : C5DP06FD

Remove the screws (7) of the exterior handle (8).
Detach the sleeve (9) (following "c").
Release the cable (10) (at "d").
Remove the exterior handle (8).

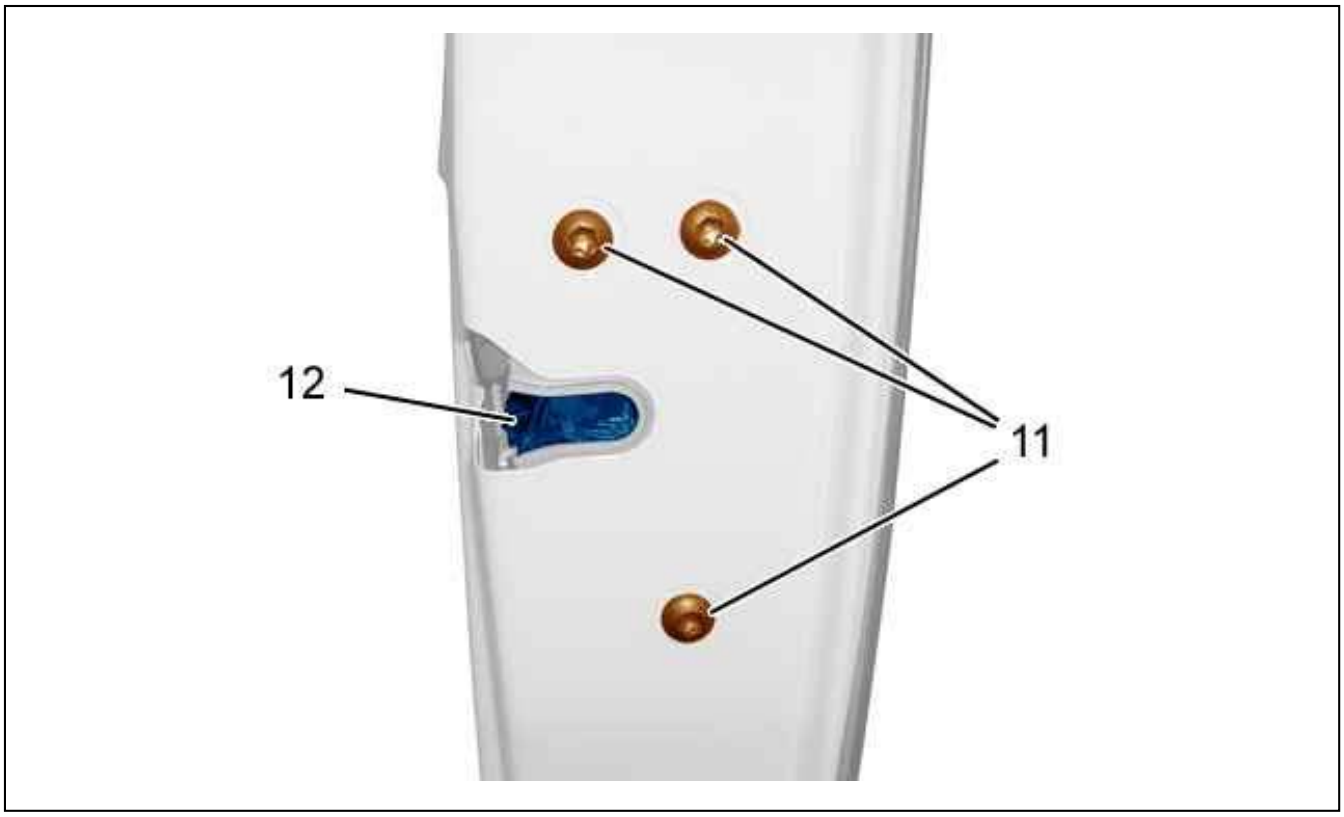

Figure : C4CP1PTD

Remove the screws (11) of the lock (12).



Figure : C4CP1RND

Disconnect the connector (following "e").

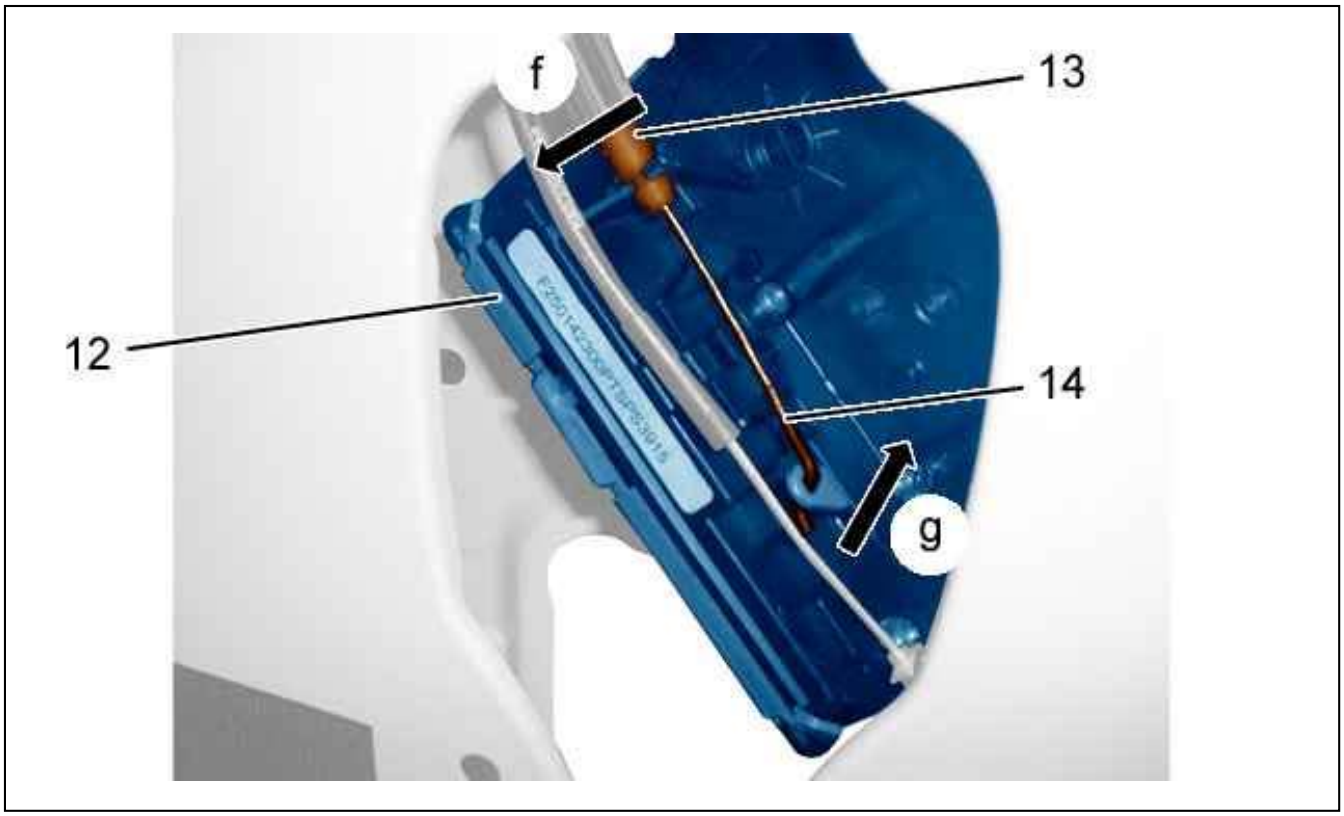

Figure : C5DP06GD

Remove :

- The cable guide (13) (following "f")
- The cable (14) (following "g")

Remove the lock (12).

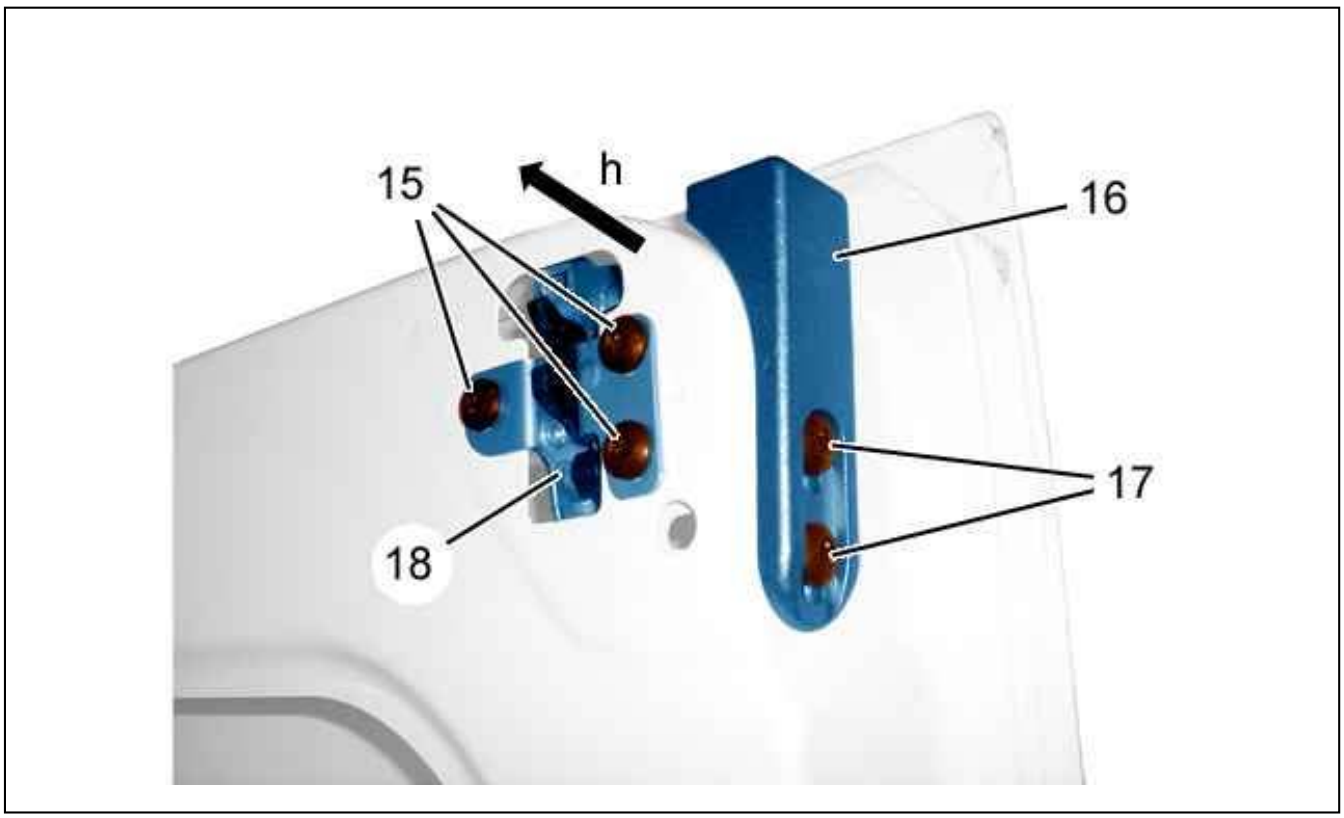

Figure : C4CP1RPD

Remove :

- The bolts (15)
- The top closing mechanism (18) (following "h")
- The bolts (17)
- The top abutment (16)

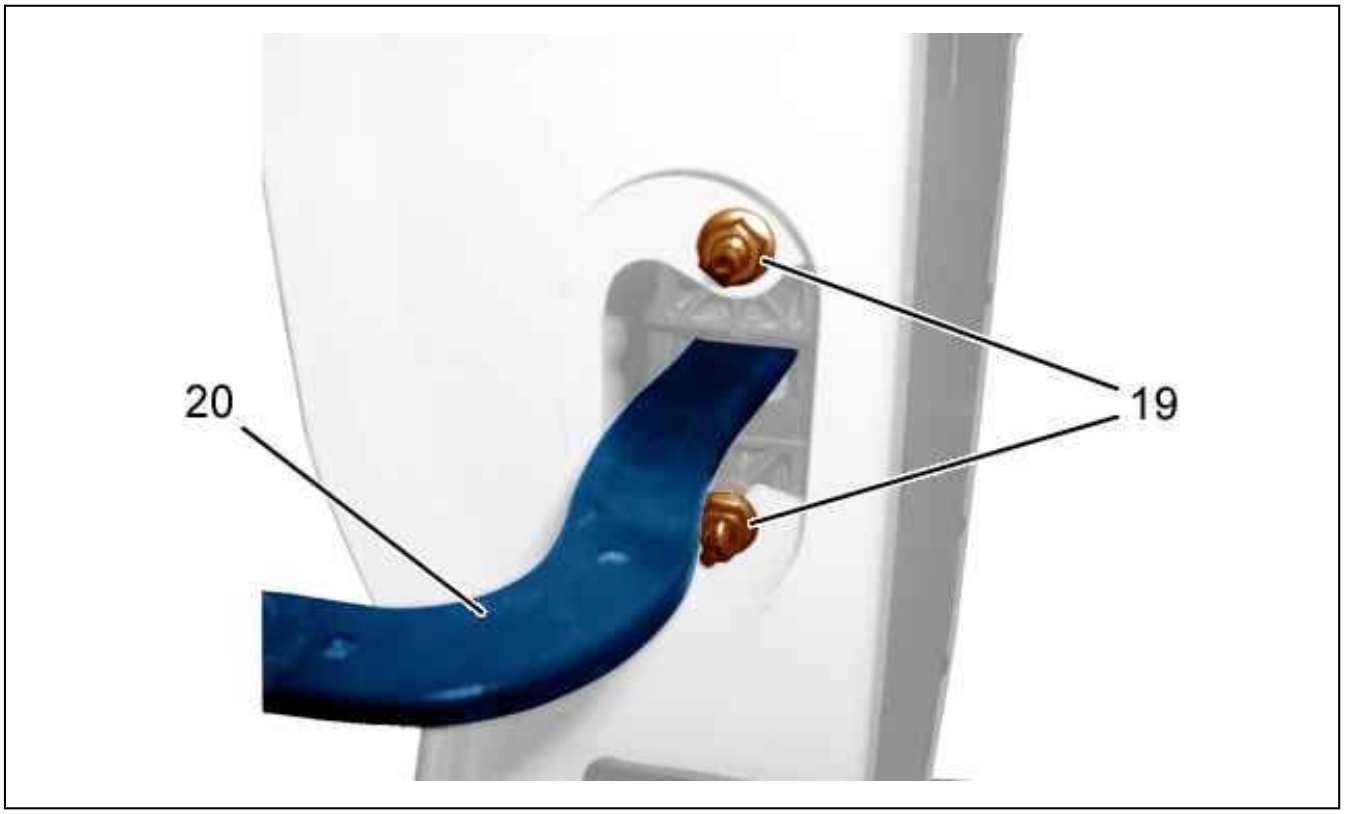

Figure : C4CP1RQD

Remove :

- The bolts (19)
- The door check strap (20) (see the relevant operation)

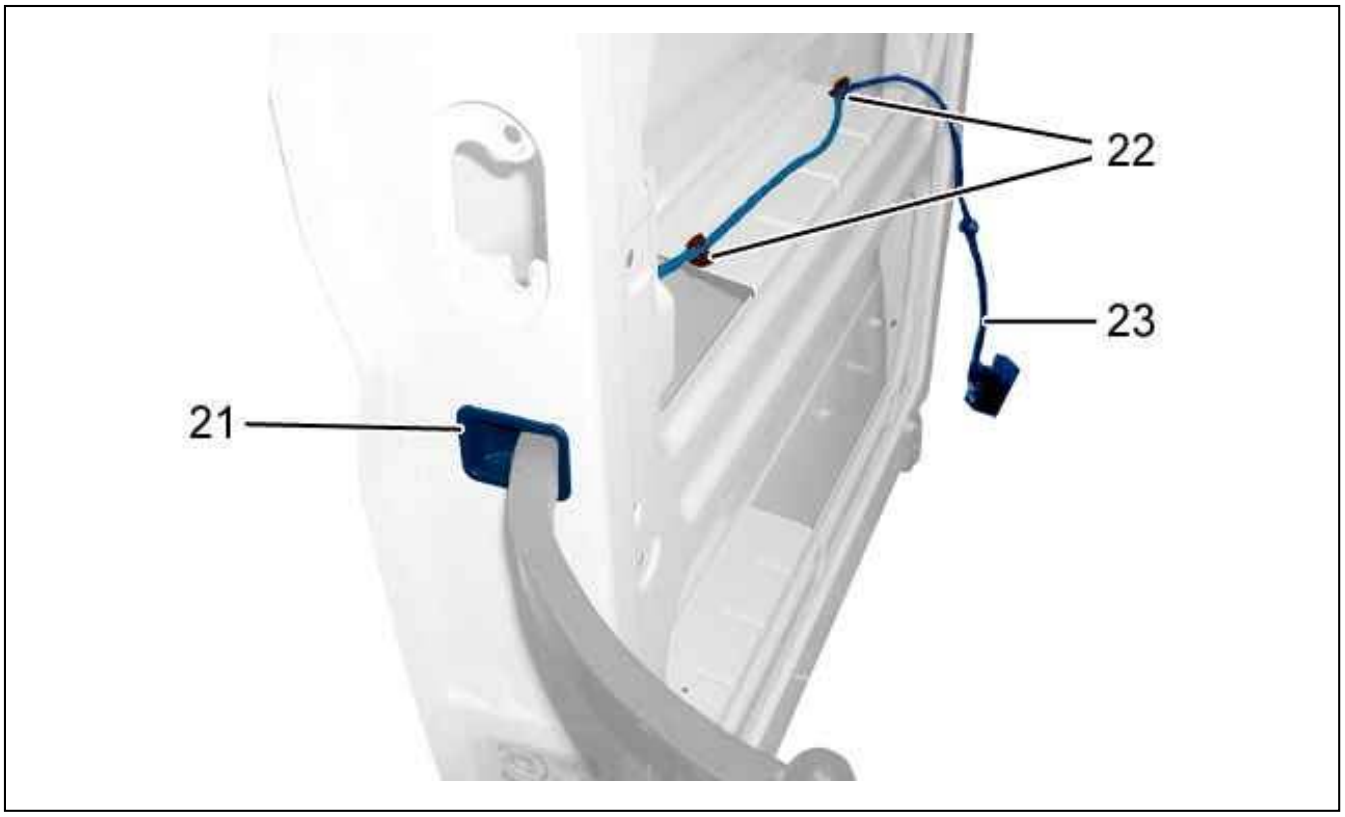

Figure : C4CP1RRD

Remove the clips (22).
Detach the protection (21) (see the relevant operation).
Remove the electric harness (23).

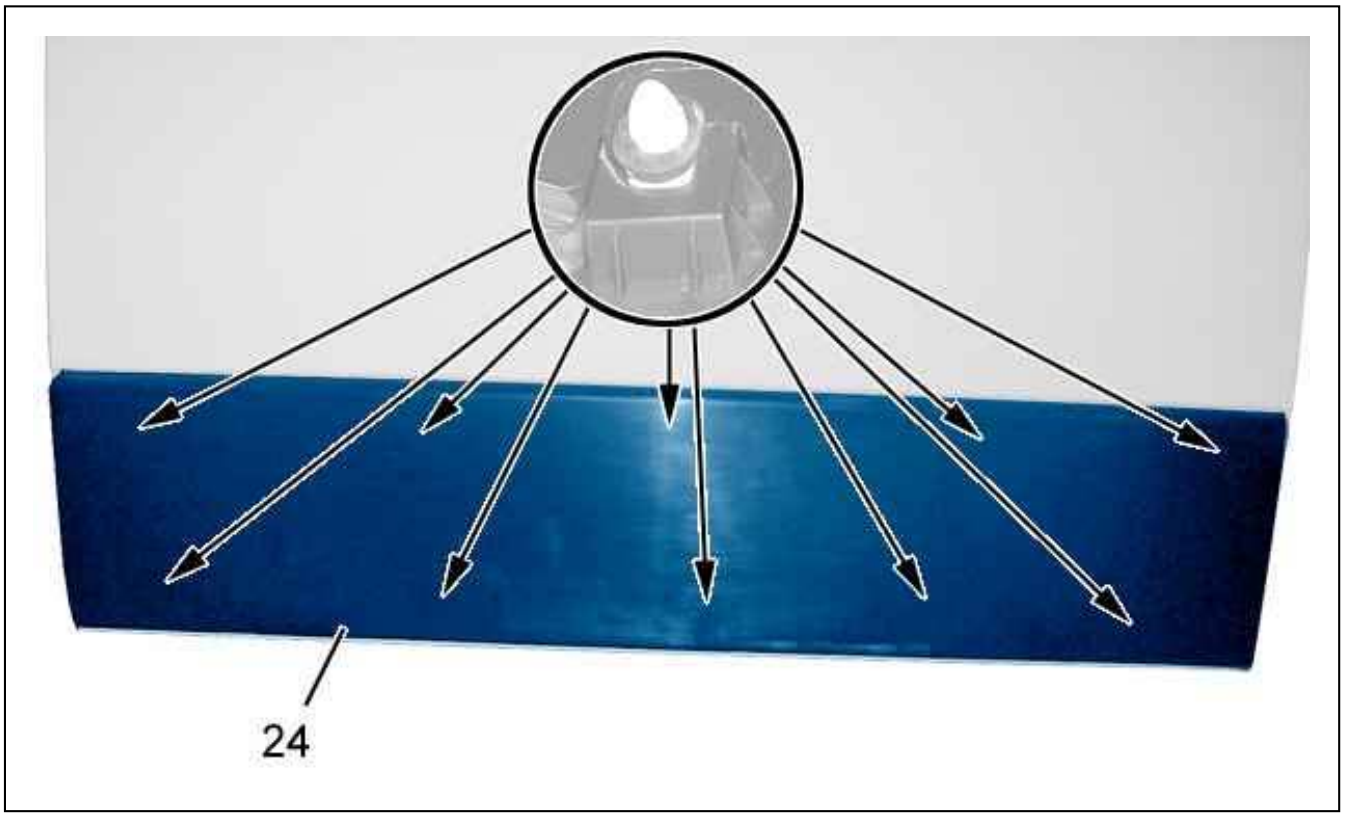

Figure : C4CP1RSD

Unclip the rear door rubbing strip (24) ; Using tool [1].
Remove the rear door rubbing strip (24).

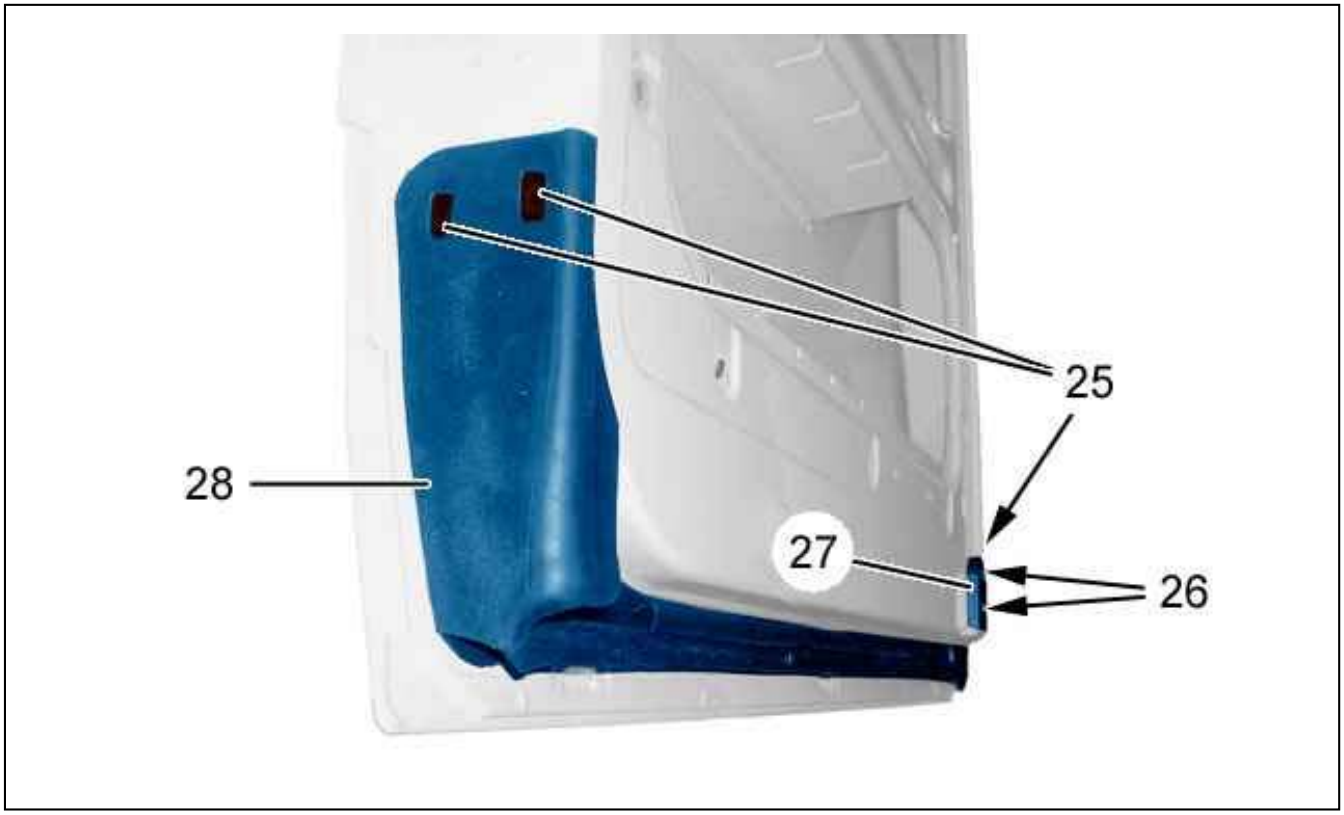

Figure : C4CP1RTD

Remove :

- The mountings (25)
- The door sill seal (28)
- The bolts (26)
- The bottom stop (27)

3. Re-assembling

Carry out the re-trim operations in the reverse order to the stripping operations.
Check that the central closing operates.

STRIPPING-ASSEMBLING : REAR LEFT DOOR

1. Recommended tools

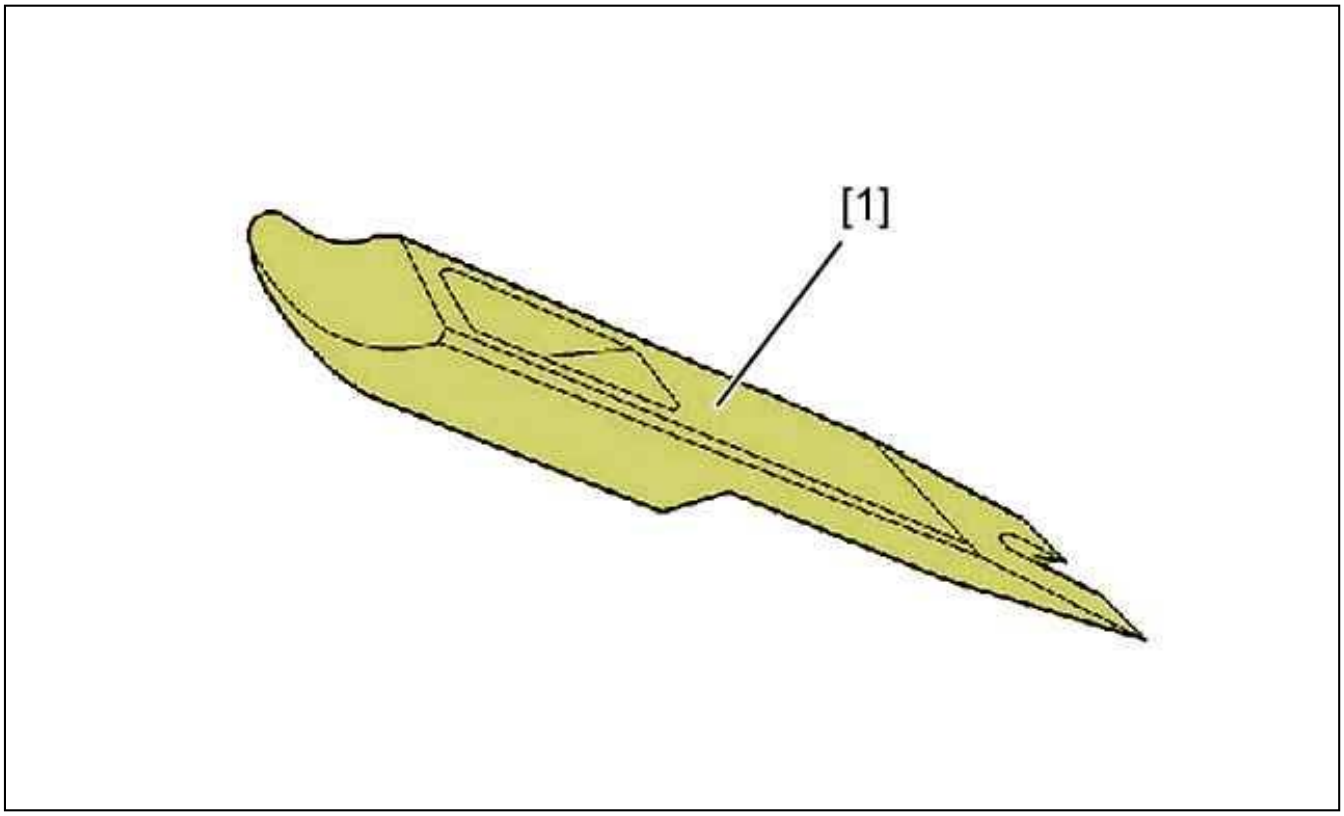

Figure : E5AP2THD

Reference	Designation	Reference
[1]	Unclipping lever	(-).1330-E
	Tool for removing side mouldings	8205-T.E

2. Stripping

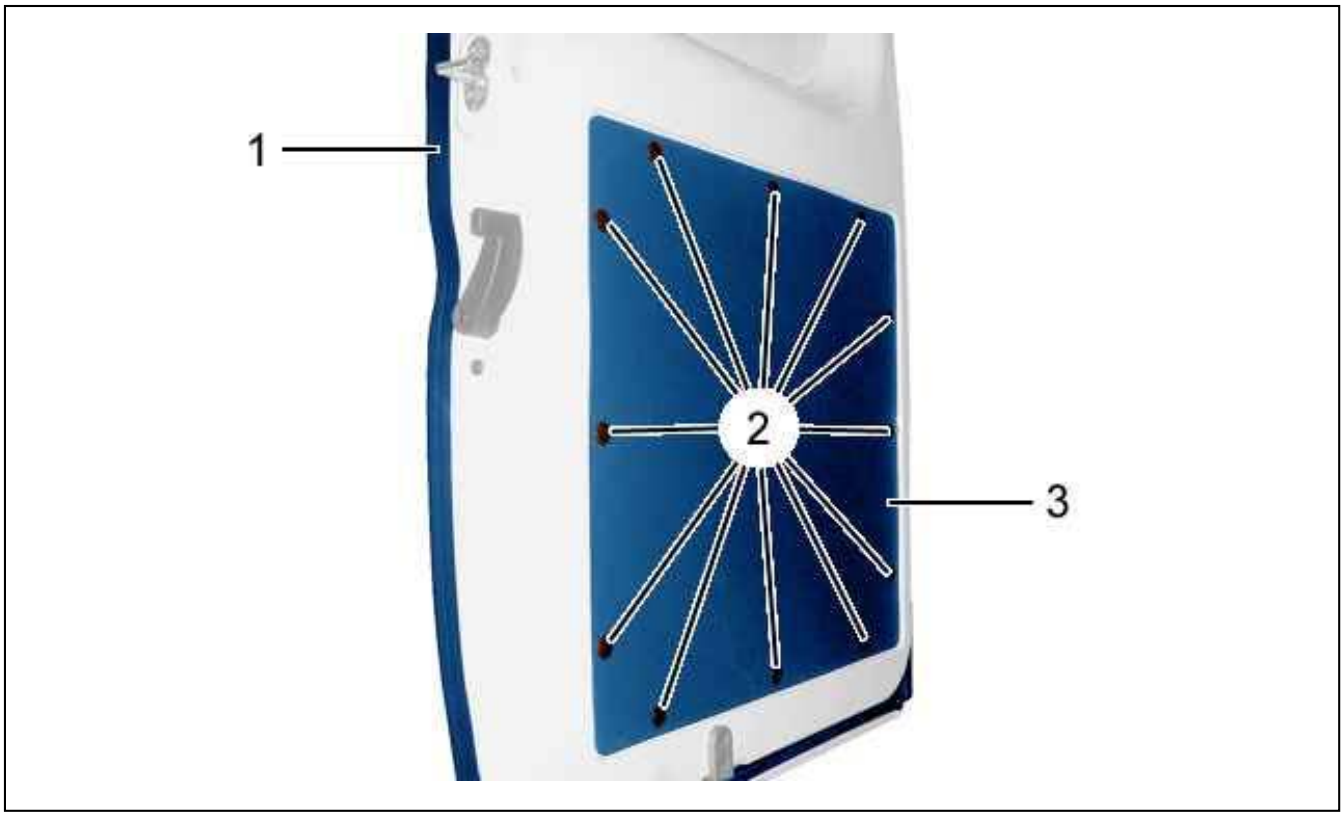

Figure : C5GP0NRD

Remove the seal (1).
Unclip the clips (2) ; Using tool [1].
Remove the trim (3).

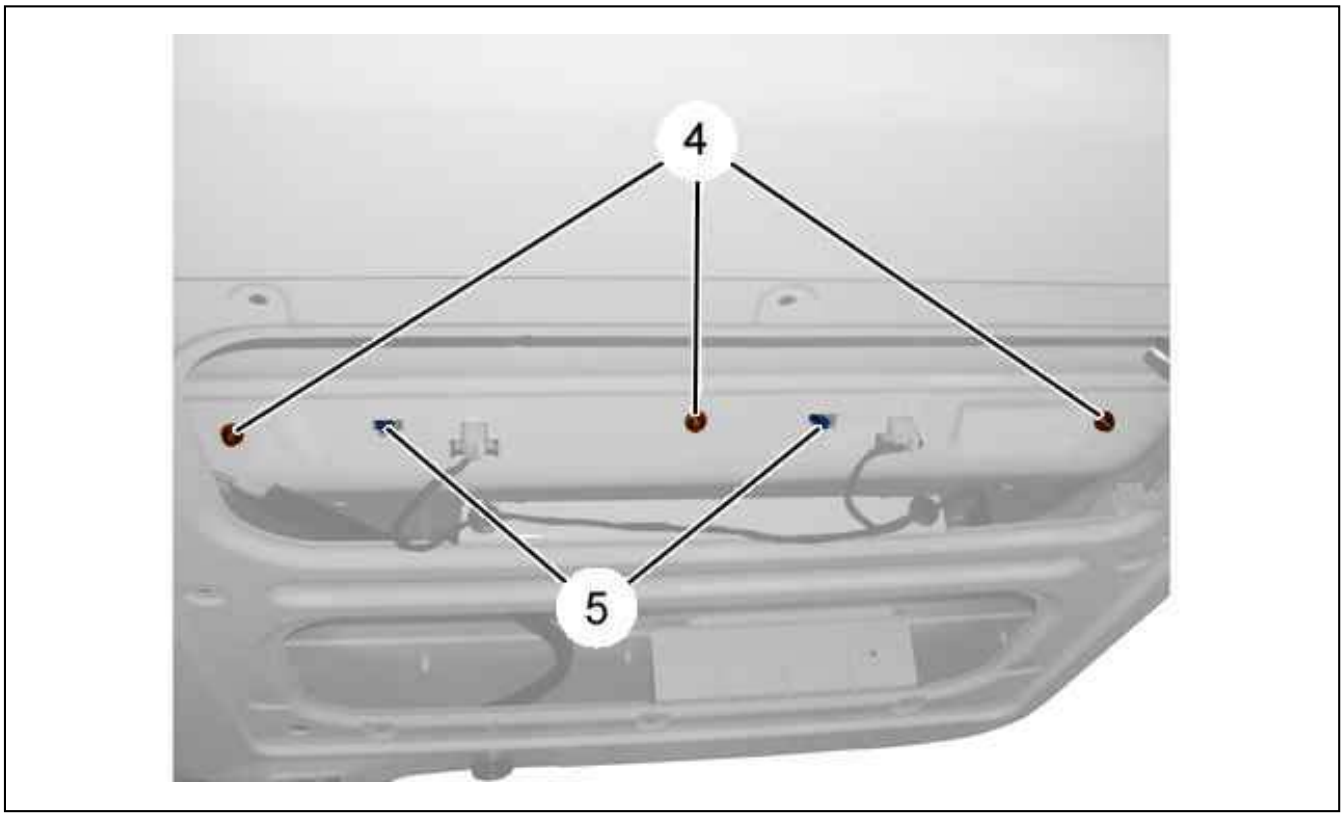

Figure : C4BP1PND

Remove the bolts (4).
Unclip the clips (5).

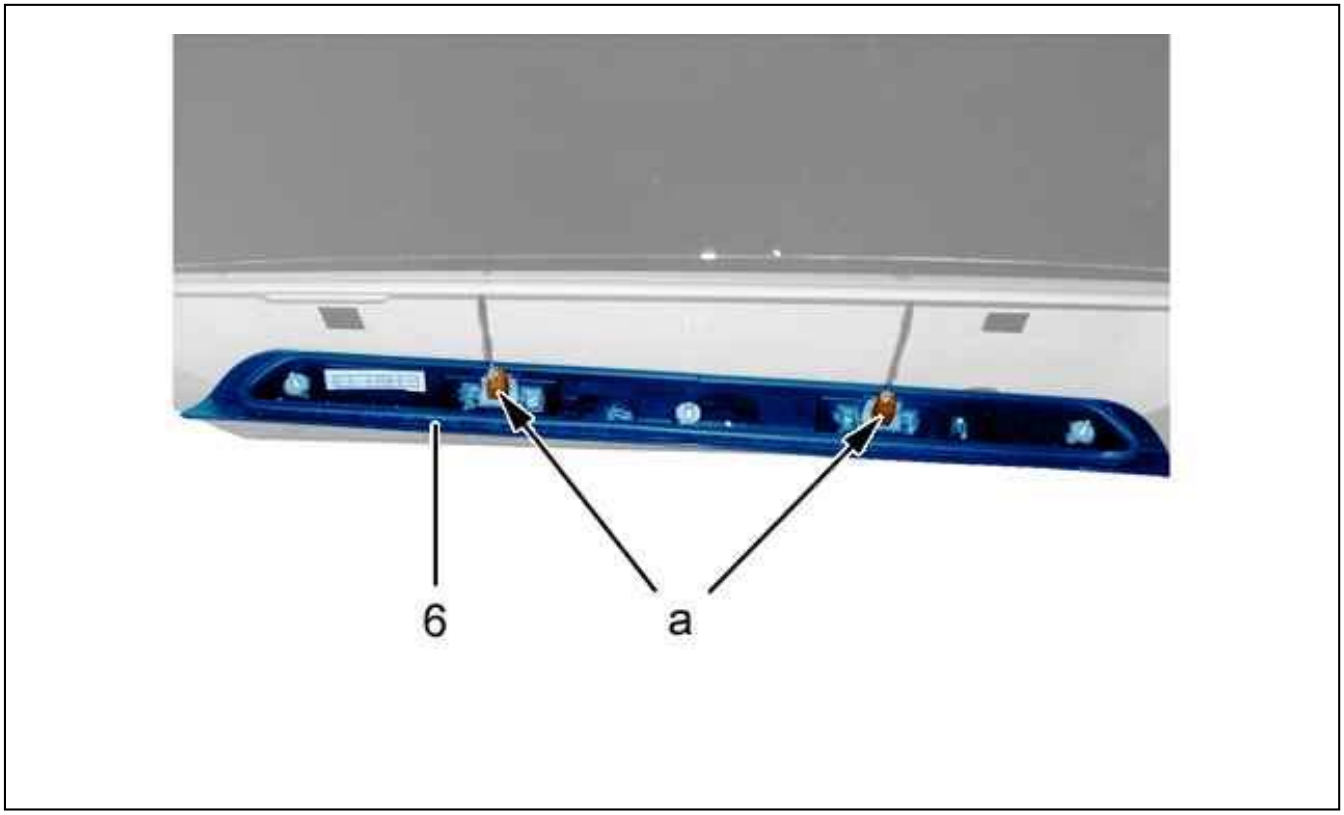

Figure : C4BP1PPD

Disconnect the number plate lamp connectors (at "a").
Remove the number plate embellisher (6).

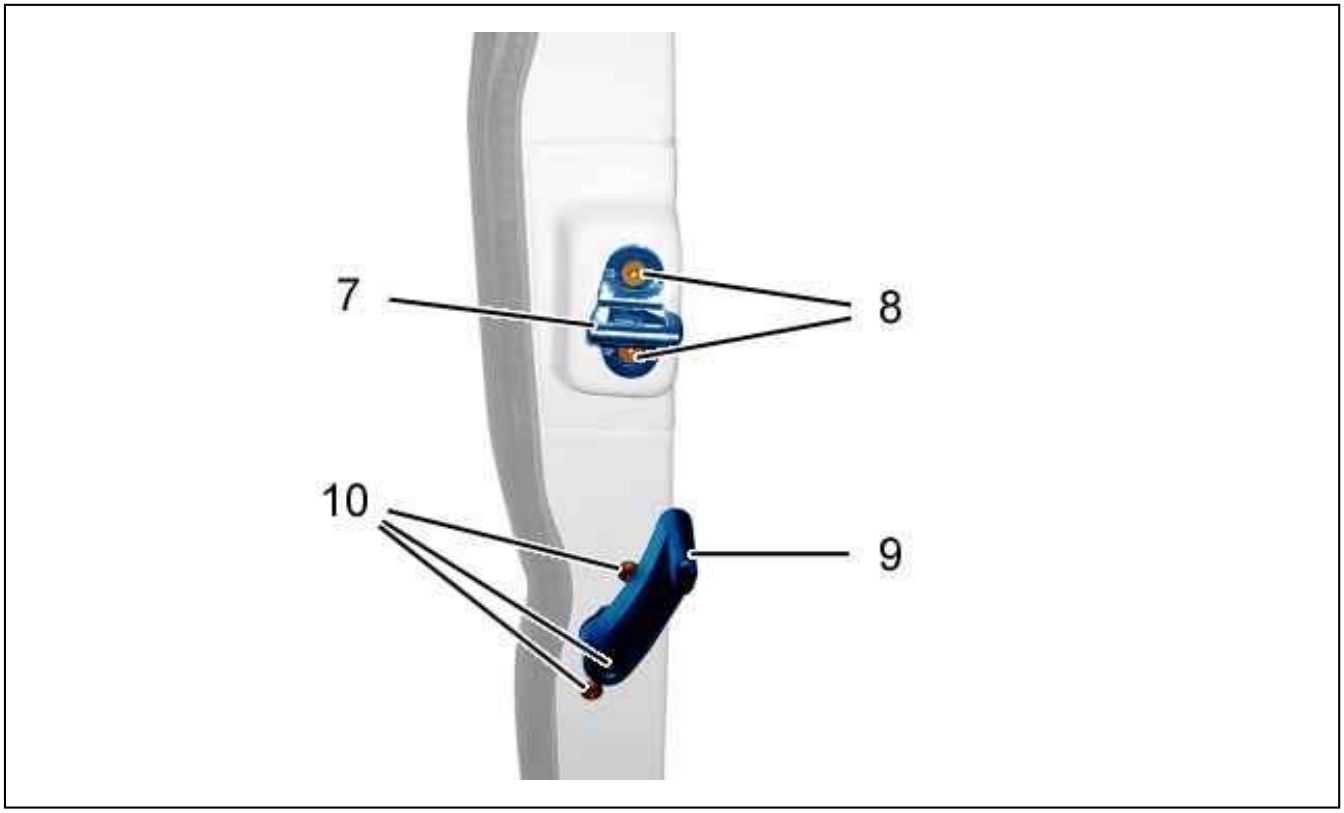

Figure : C4BP1PQD

Remove :

- The bolts (10)
- The handle (9)
- The bolts (8)
- The striker (7)

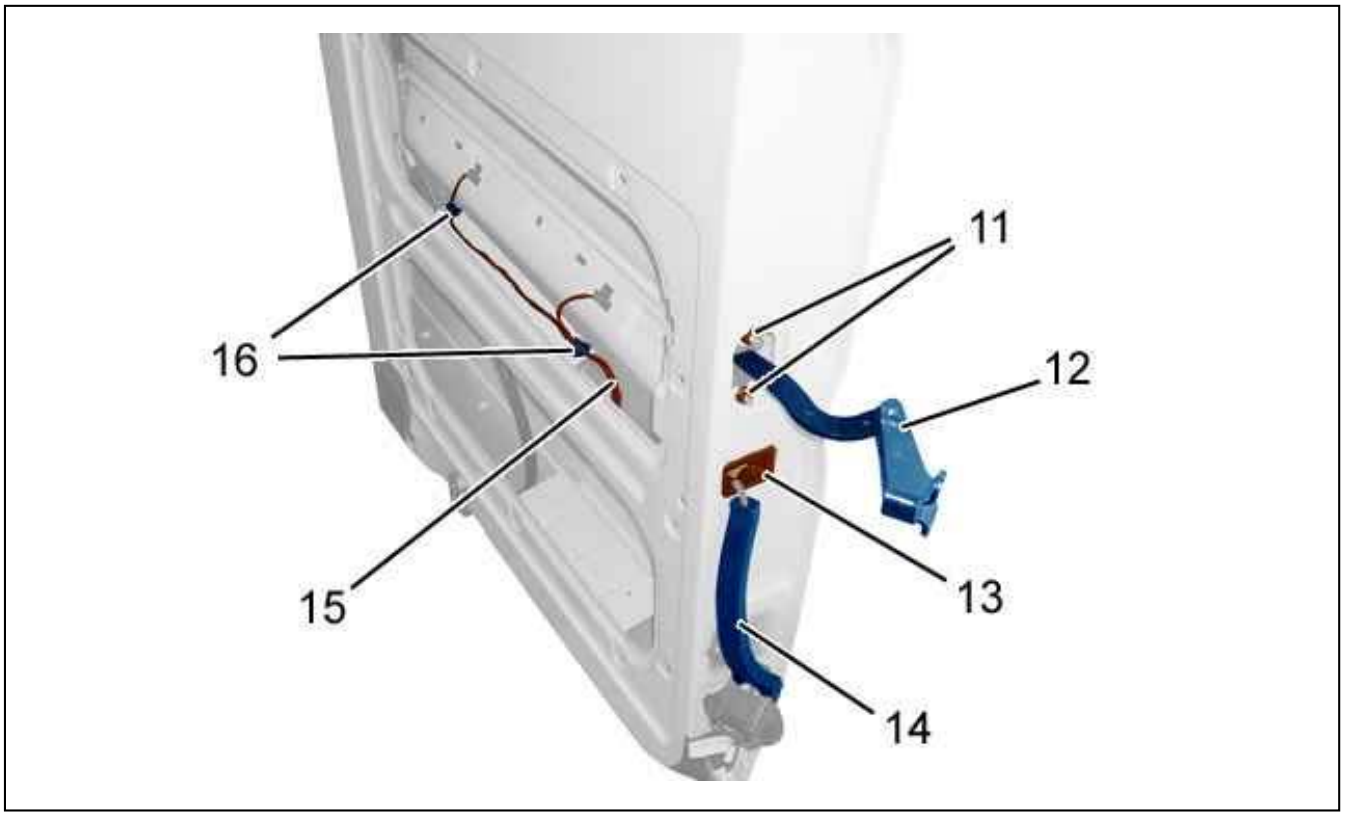

Figure : C4BP1PRD

Remove :

- The bolts (11)
- The door check strap (12)
- The clips (16)
- The protection sleeve (14)
- The electrical harness (15)

Detach the protection (13).

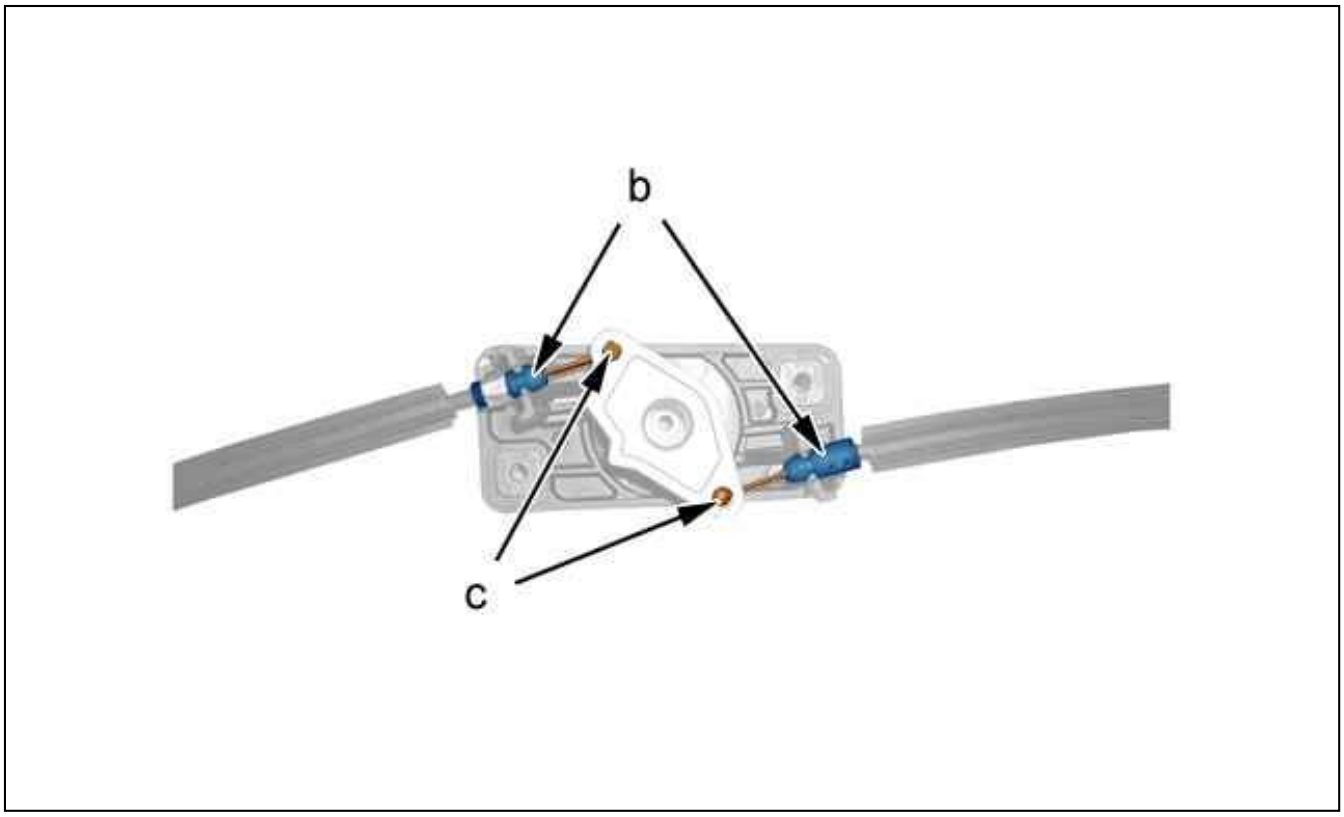

Figure : C5DP06HD

Remove :

- The 2 lock cable guides (at "b")
- The lock cables (at "c")
- The catch

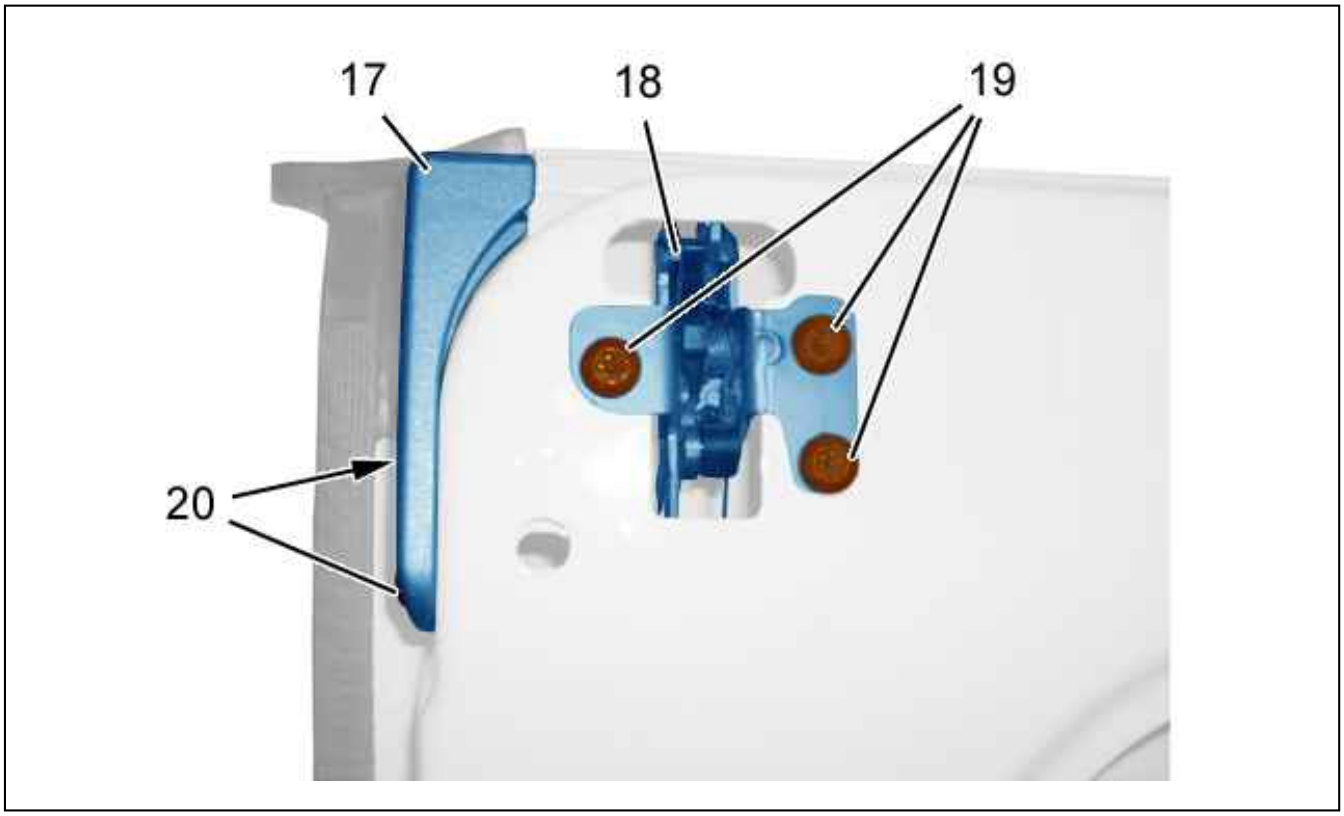

Figure : C4BP1PSD

Remove :

- The bolts (19)
- The top closing mechanism (18)
- The bolts (20)
- The top abutment (17)

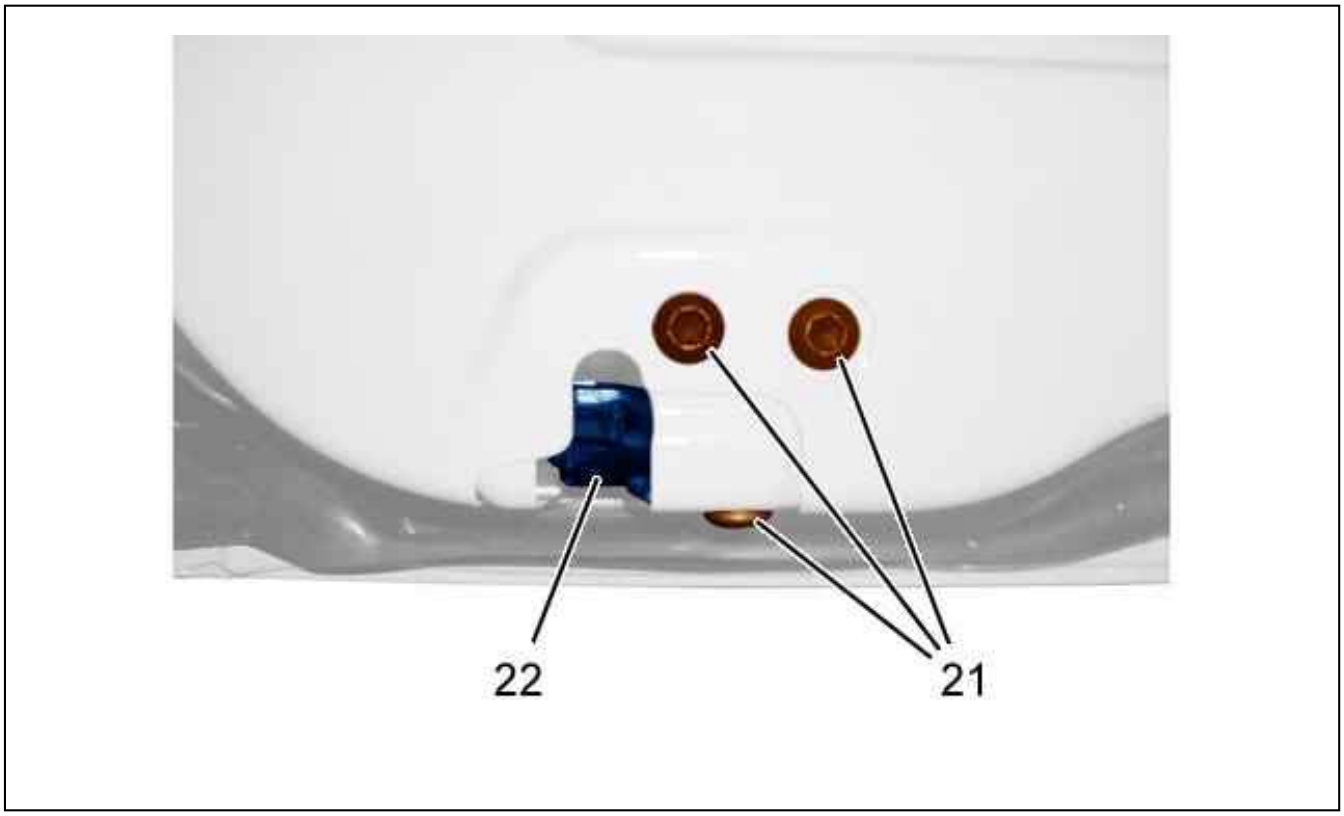

Figure : C4BP1PTD

Remove :

- The bolts (21)
- The bottom closing mechanism (22)

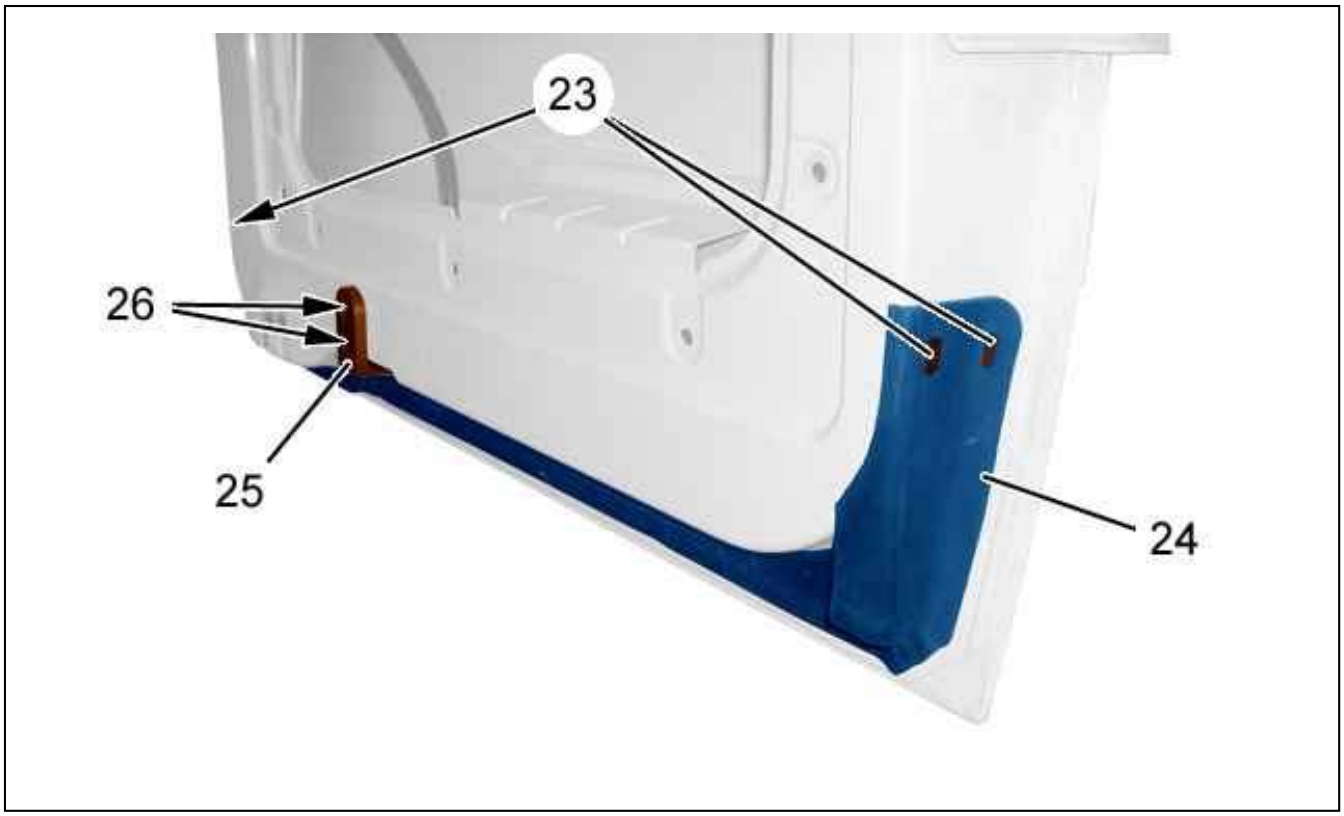

Figure : C4BP1PUD

Remove :

- The mountings (23)
- The door sill seal (24)
- The bolts (26)
- The bottom stop (25)

3. Re-assembling

Carry out the re-trim operations in the reverse order to the stripping operations.
Check the operation.

STRIPPING - RE-ASSEMBLING : REAR LEFT DOOR

ESSENTIAL : Observe the safety and cleanliness recommendations.

1. Recommended tools

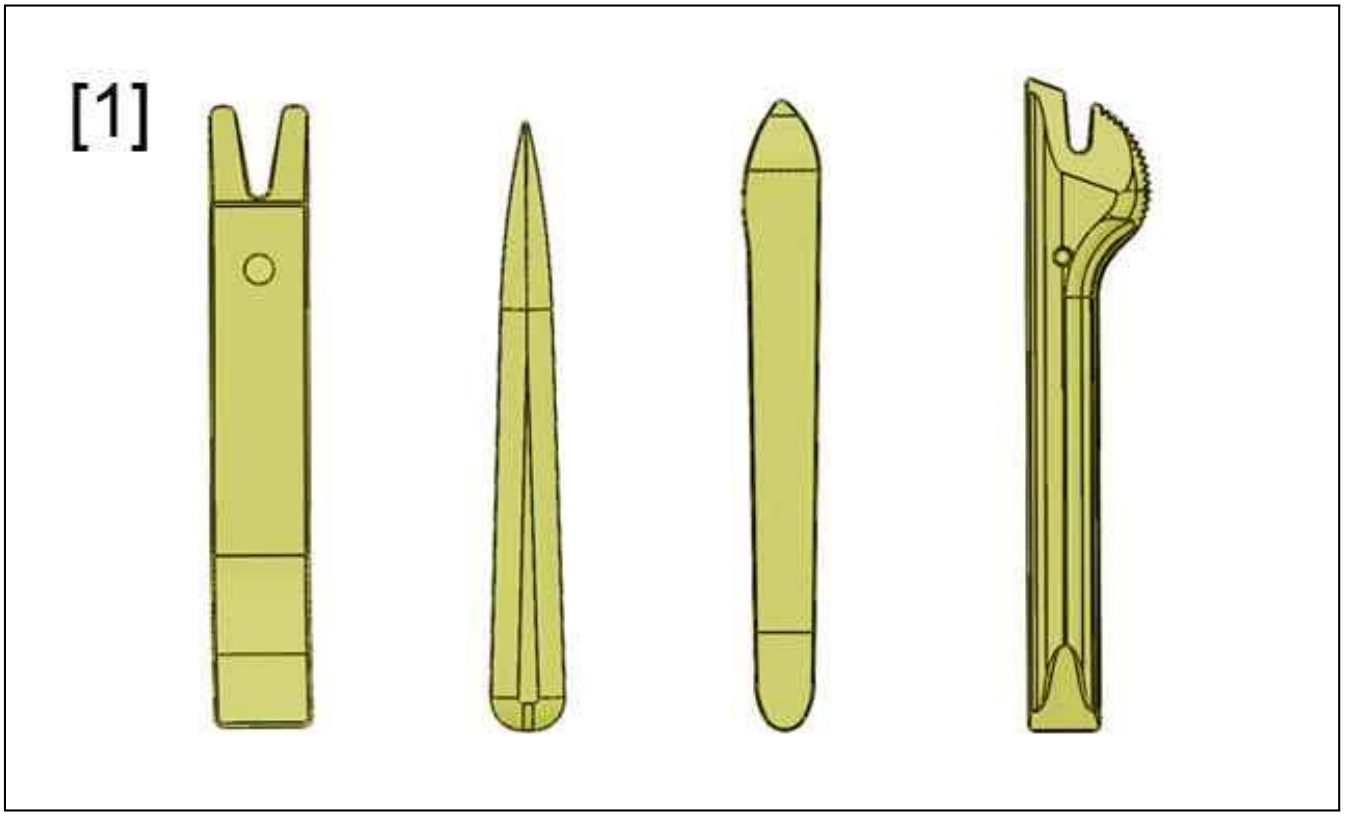

Figure : E5AP30WD

[1] Stripping tools (-).1350-ZZ.

2. Stripping

Perform the following operations :

- Switch off the ignition
- Wait 3 minutes before disconnecting the battery
- Disconnect the battery

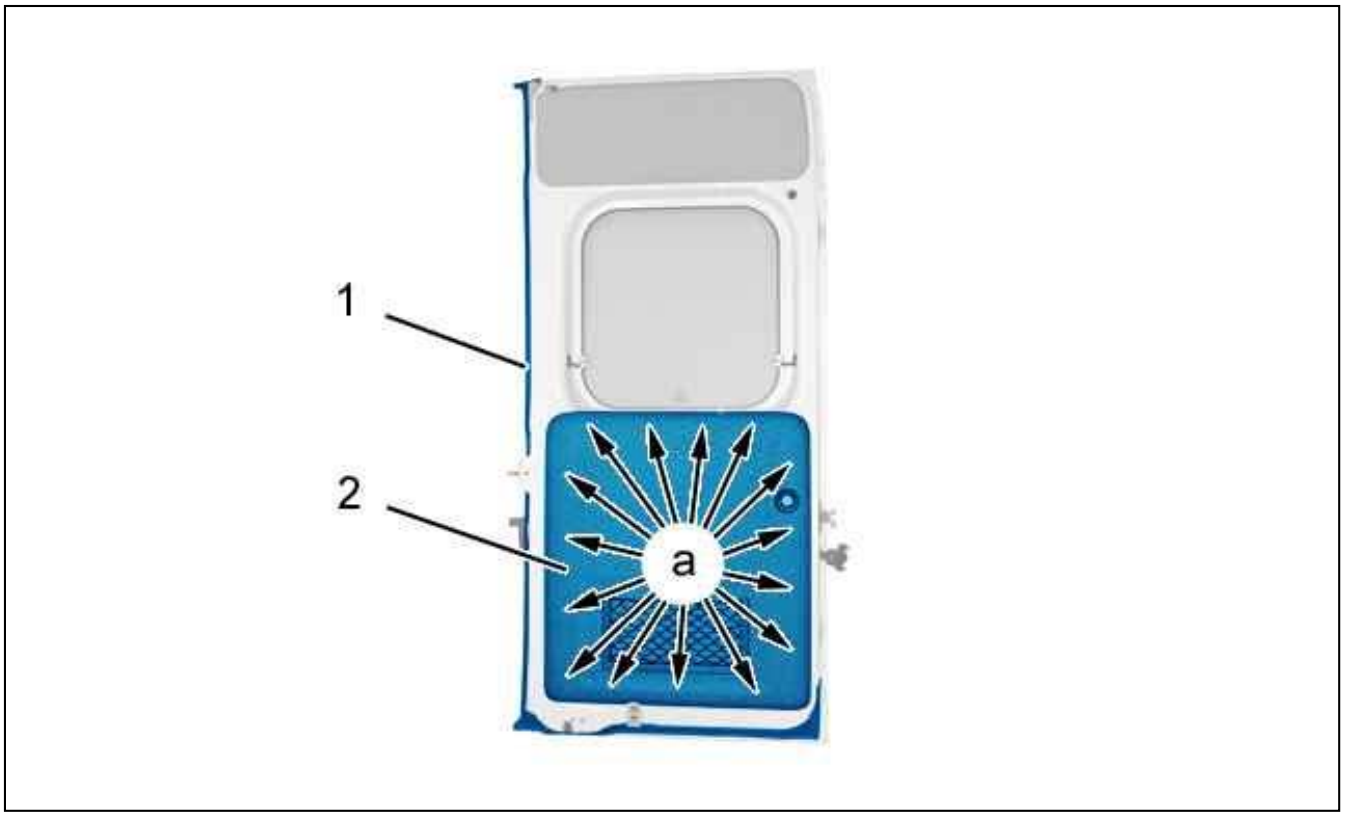

Figure : C4BM0E7D

Remove the seal (1).
Unclip the clips (at "a") ; Using tool [1].
Remove the lower lining (2).

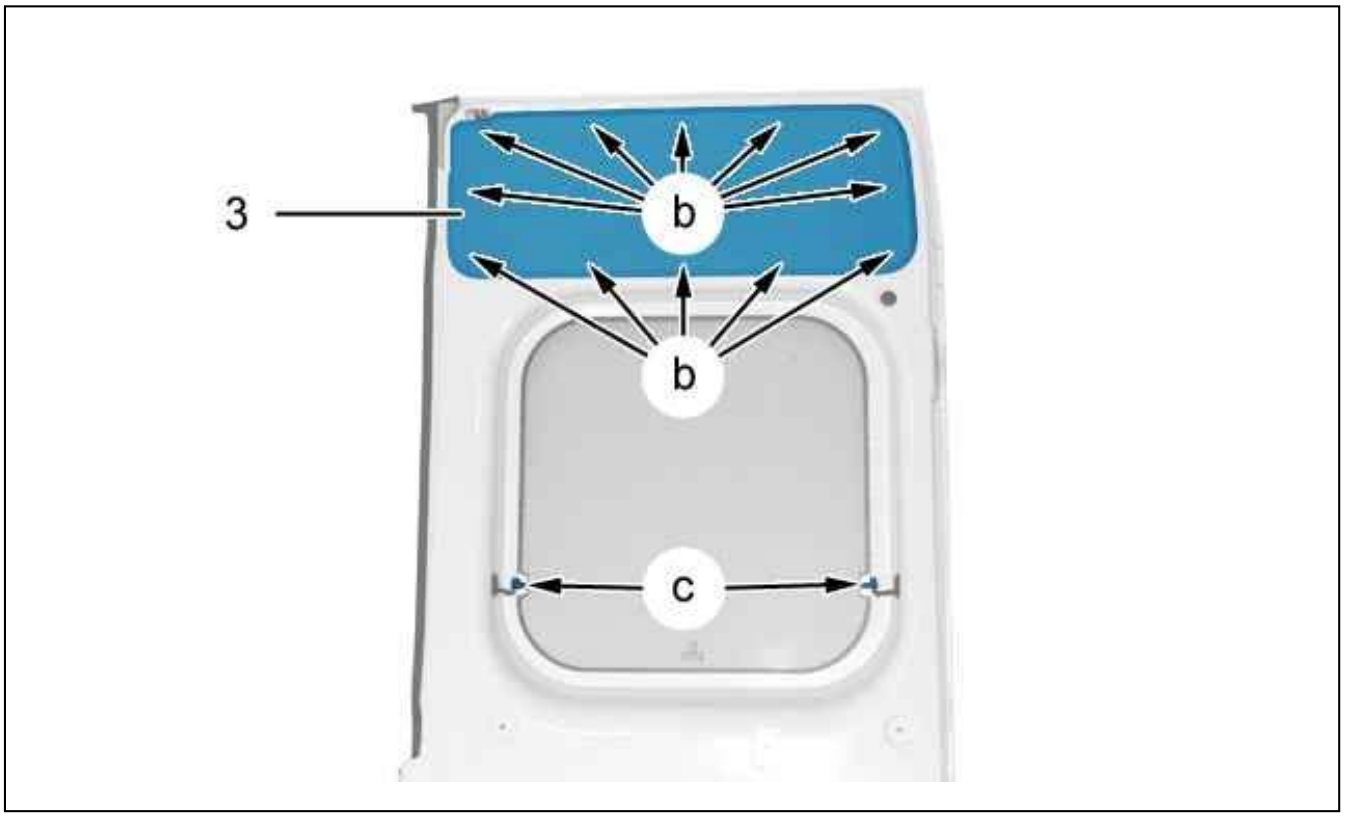

Figure : C4BM0E8D

Disconnect the connectors (at "c").
Unclip the clips (at "b") ; Using tool [1].
Remove the upper trim (3).
Remove : Hinged rear door glass .

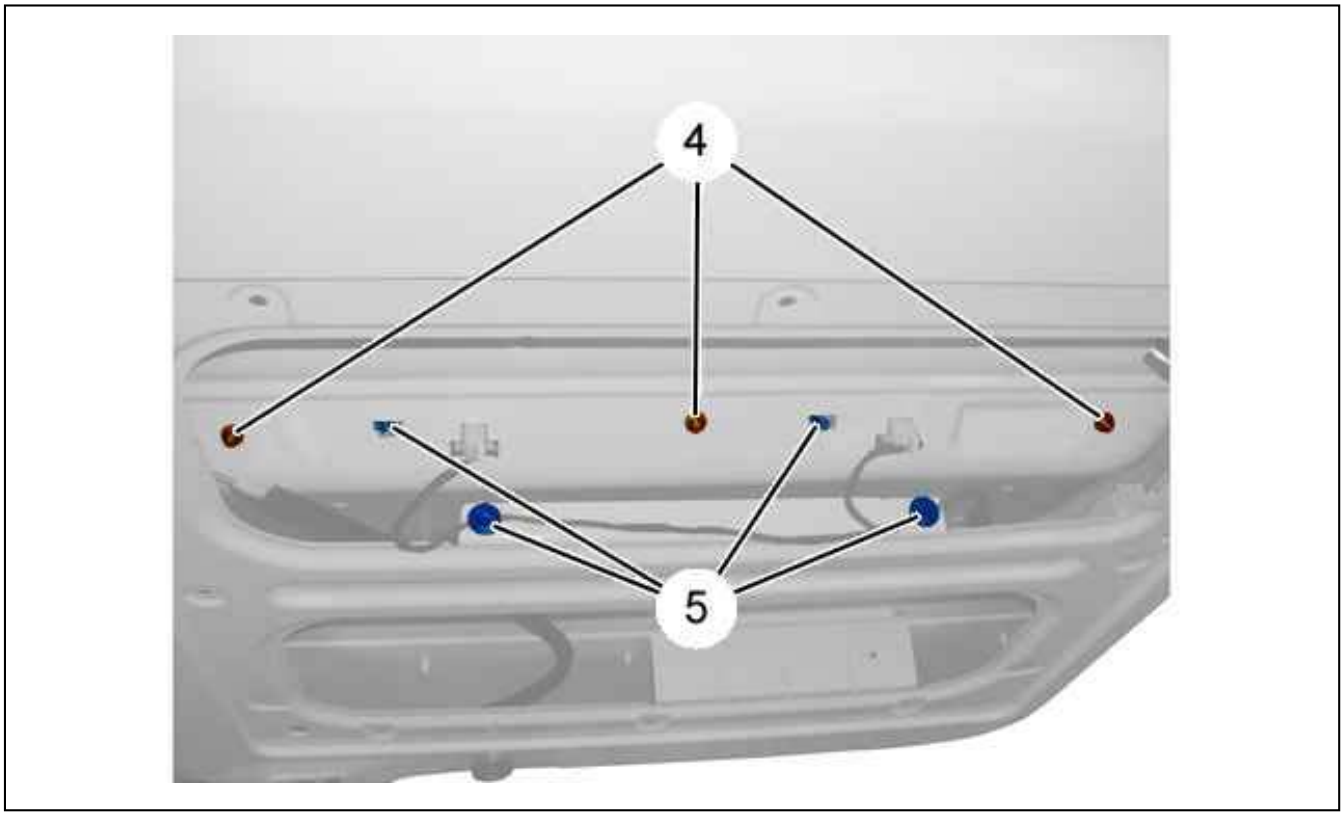

Figure : C4BM0E9D

Remove the bolts (4).
Unclip the clips (5).

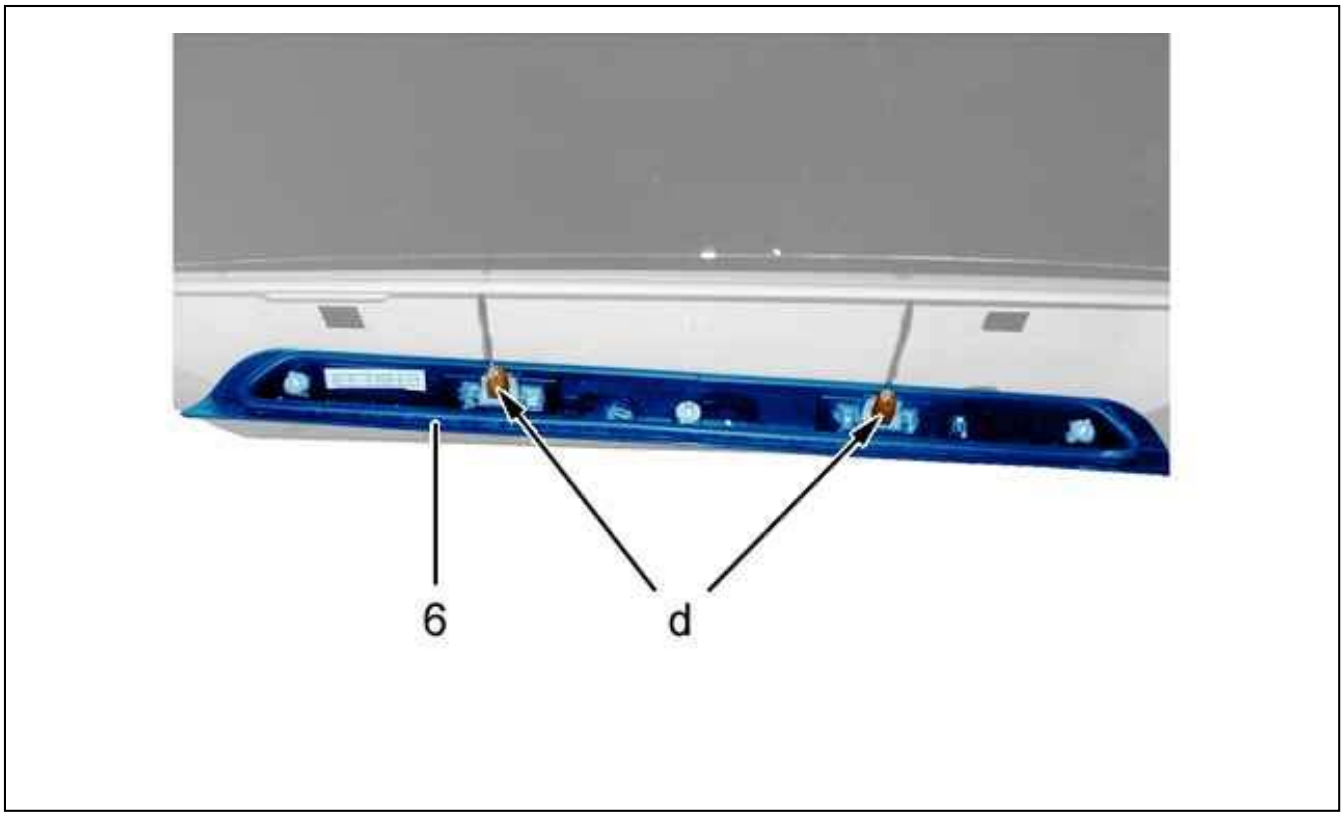

Figure : C4BM0EAD

Disconnect the number plate lamp connectors (at "d").
Remove the number plate embellisher (6).

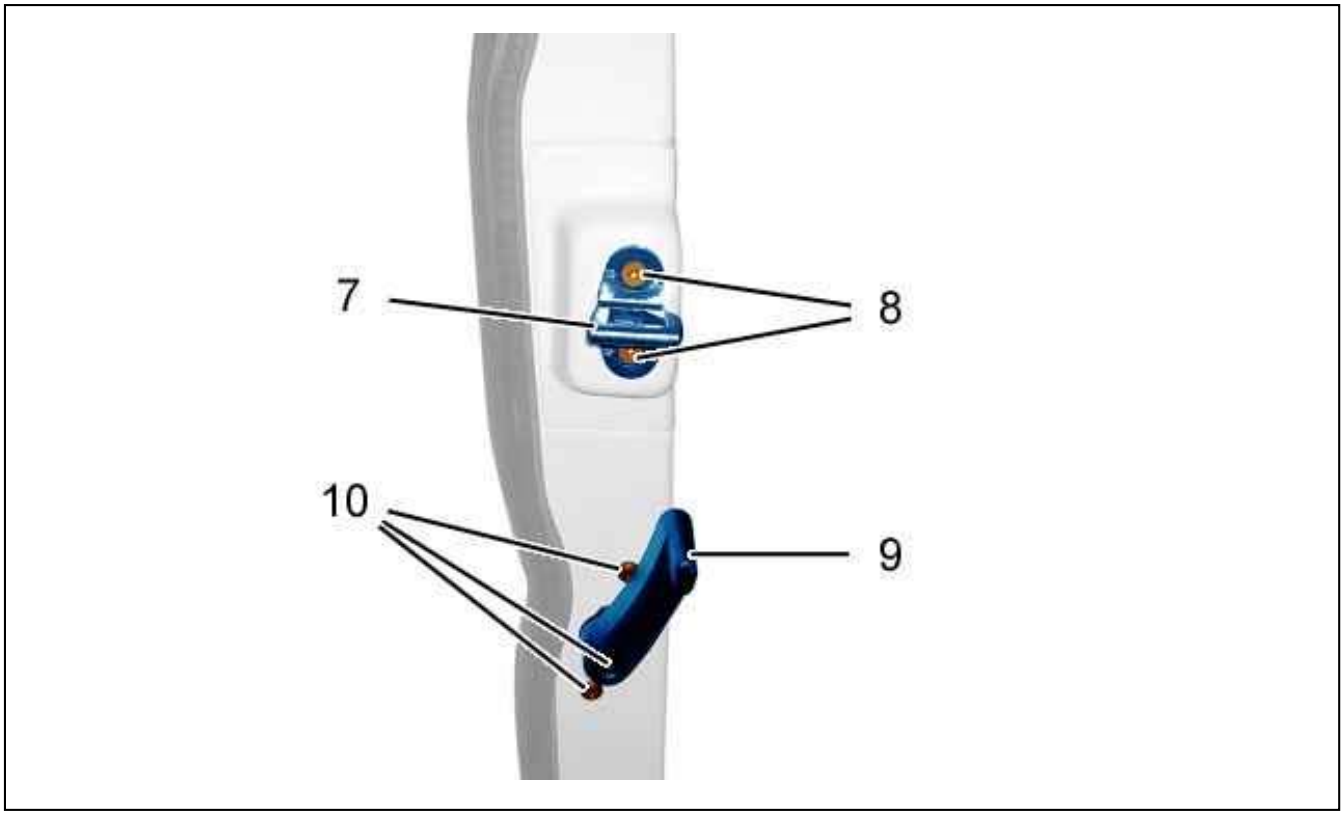

Figure : C4BP1PQD

Remove :

- The bolts (10)
- The handle (9)
- The bolts (8)
- The striker (7)

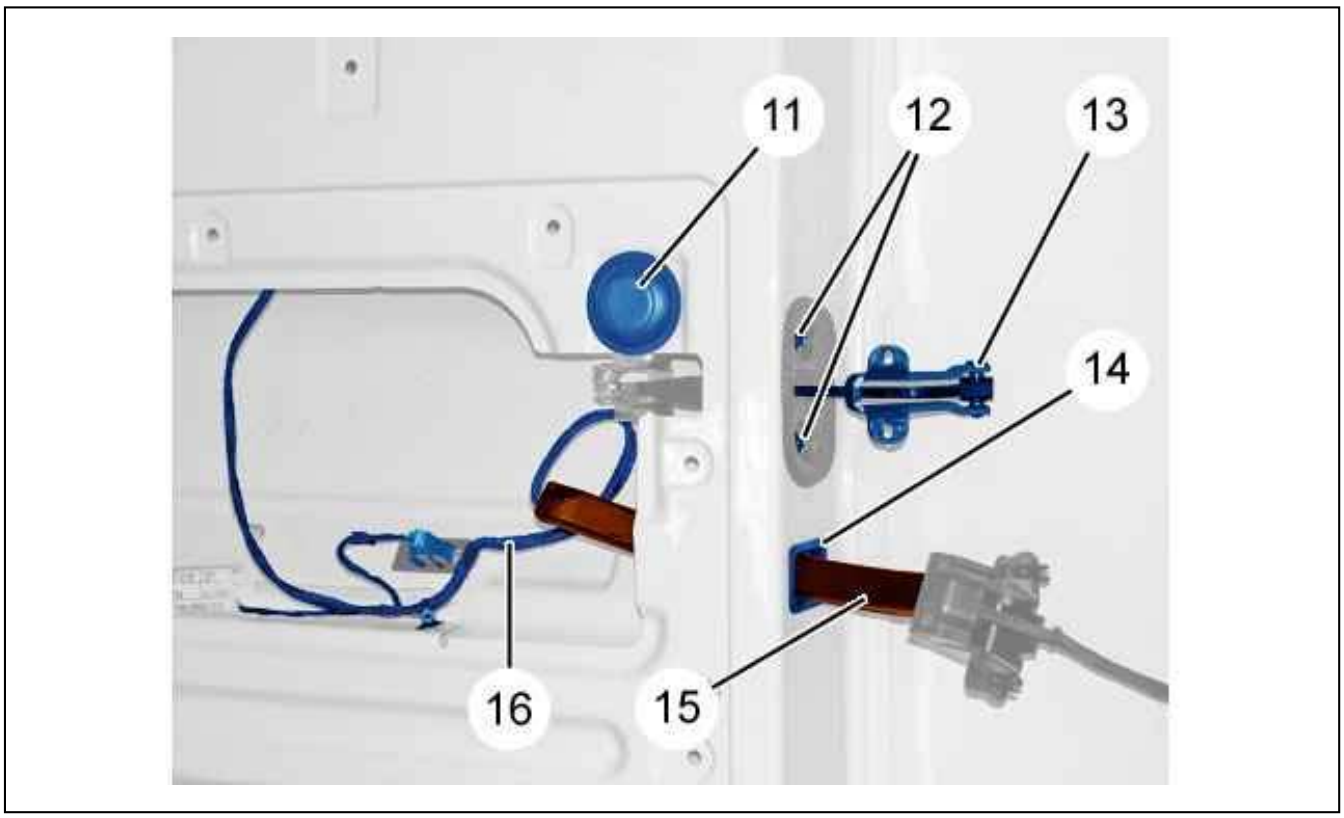

Figure : C4BM0EBD

Detach the protection (14).
Remove :

- The press button (11)
- The bolts (12)
- The door check strap (13)
- The protection sleeve (15)

Release the harness (16).
Remove the electric harness (16).

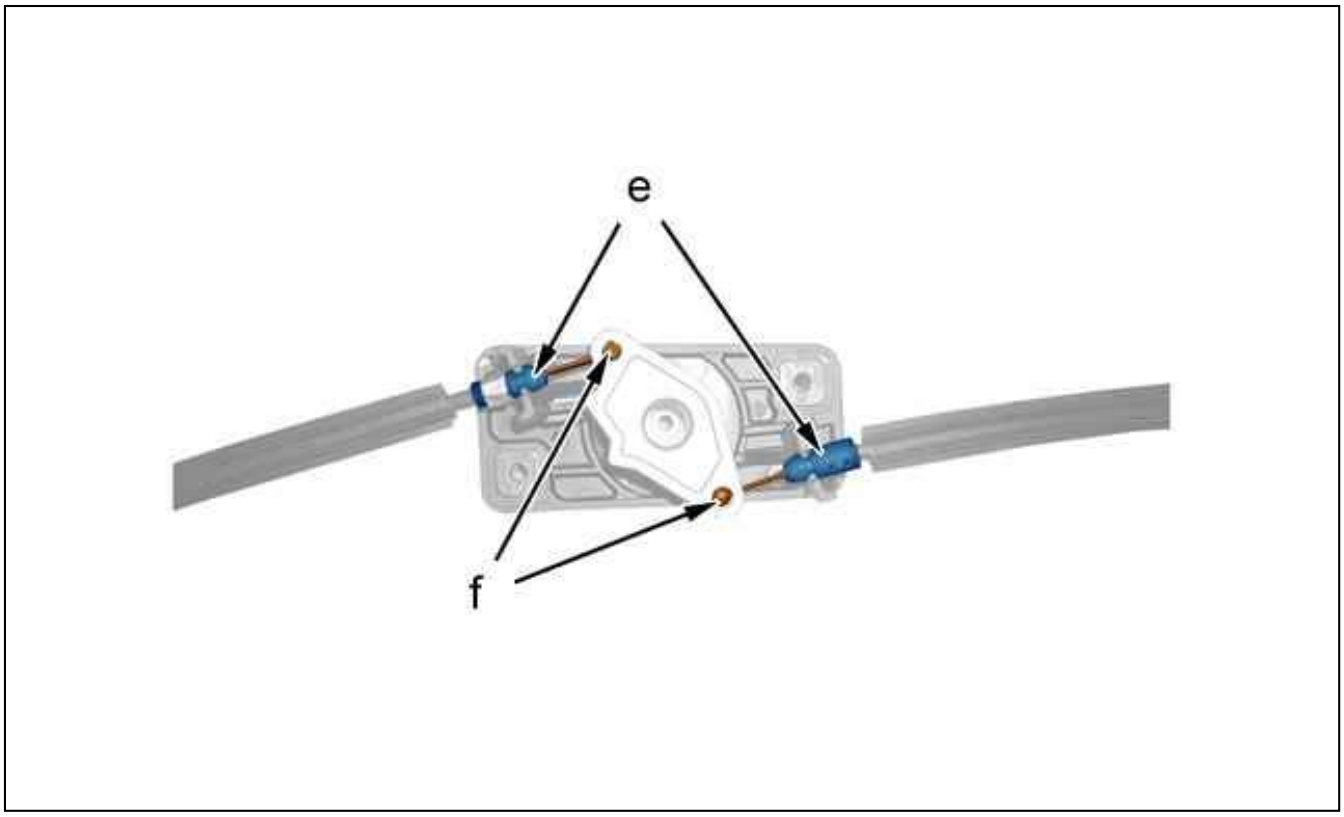

Figure : C5DM02MD

Remove :

- The 2 lock cable guides (at "e")
- The lock cables (at "f")
- The catch

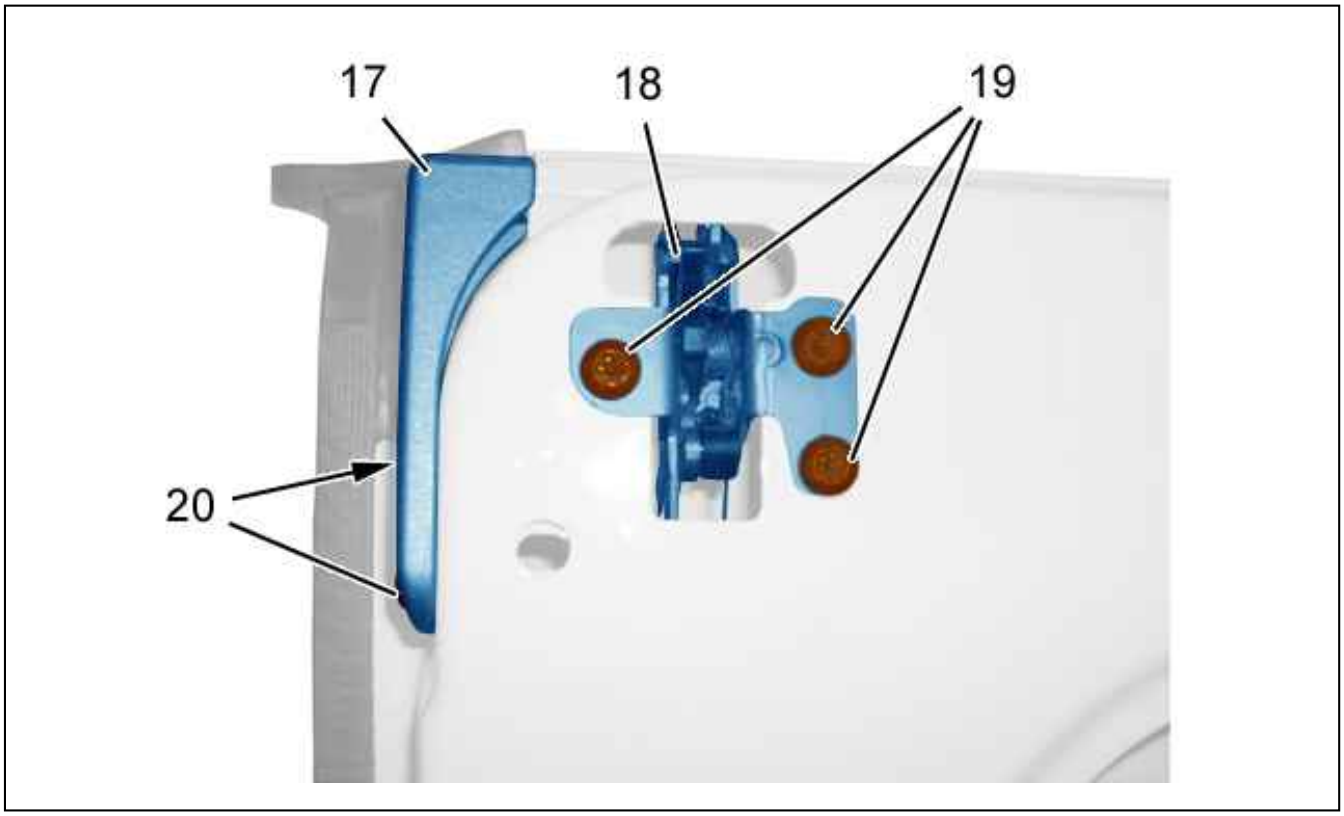

Figure : C4BP1PSD

Remove :

- The bolts (19)
- The top closing mechanism (18)
- The bolts (20)
- The top abutment (17)

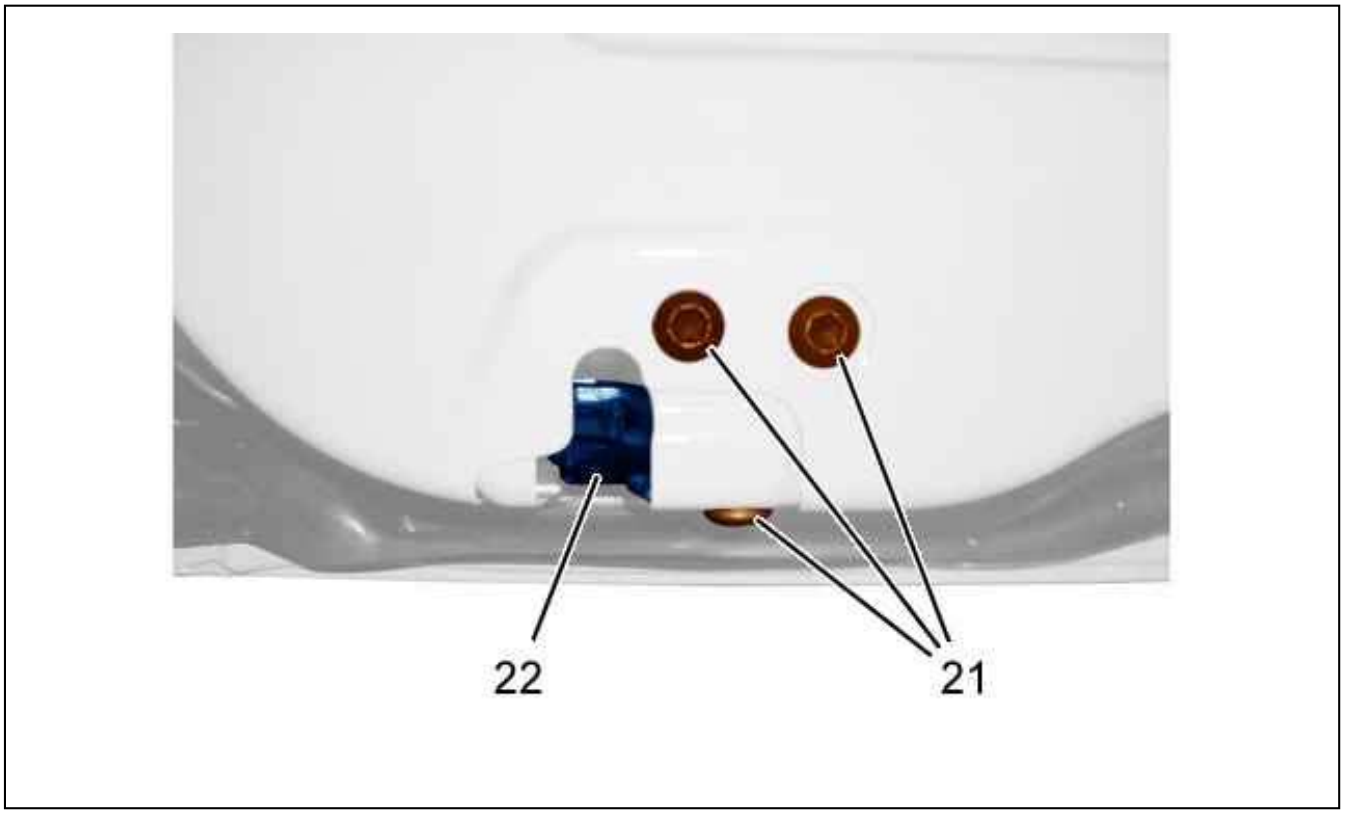

Figure : C4BP1PTD

Remove :

- The bolts (21)
- The bottom closing mechanism (22)

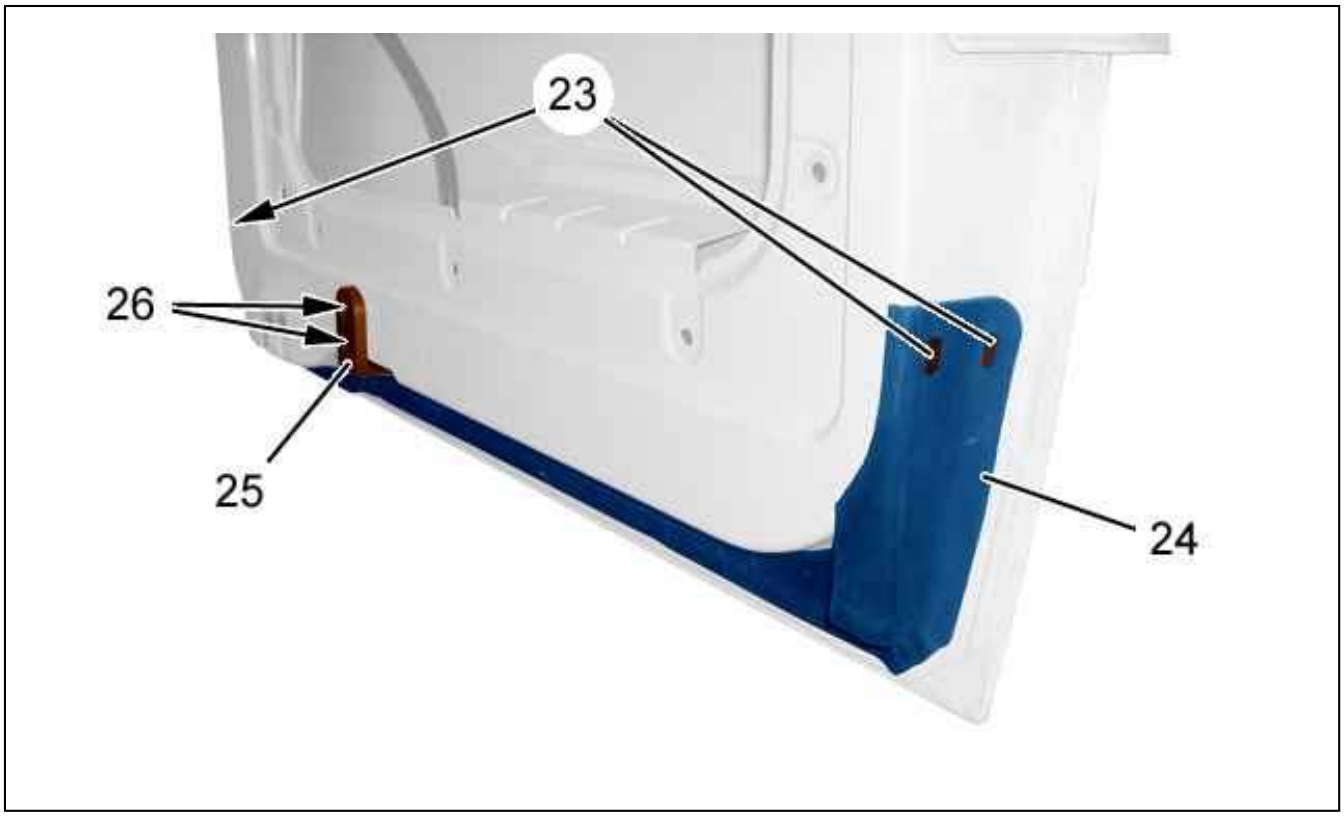

Figure : C4BP1PUD

Remove :

- The mountings (23)
- The door sill seal (24)
- The bolts (26)
- The bottom stop (25)

3. Re-assembling

Carry out the re-trim operations in the reverse order to the stripping operations.
Tighten :

- The bolts (4), (12) to 1 ± 0,1 daN.m
- The bolts (8), (9), (19), (20), (21), (26) to 2 ± 0,2 daN.m

Reconnect the battery.
Check the electrical operation of the equipment.

STRIPPING - RE-ASSEMBLING : REAR RIGHT DOOR

ESSENTIAL : Observe the safety and cleanliness recommendations.

1. Recommended tools

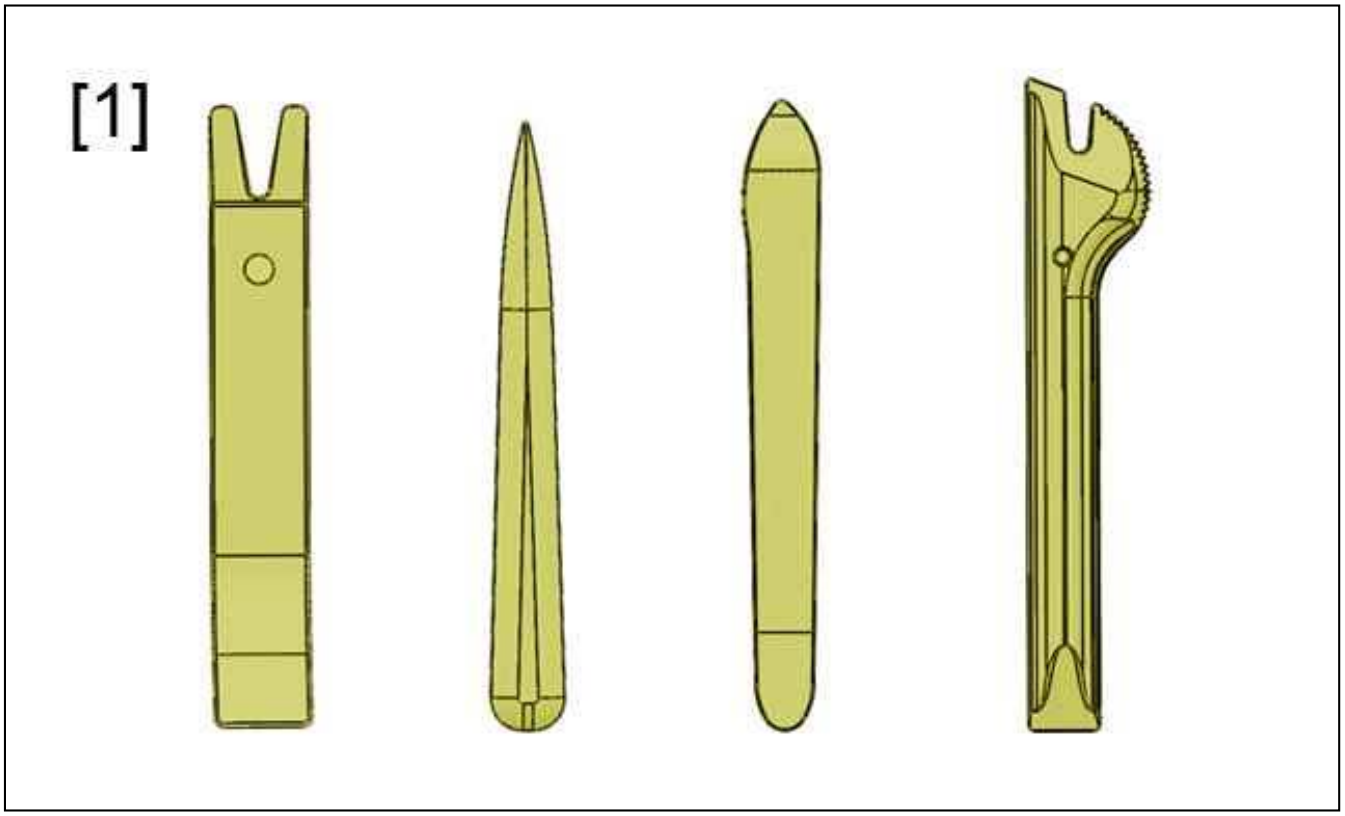

Figure : E5AP30WD

[1] Stripping tools (-).1350-ZZ.

2. Stripping

Perform the following operations :

- Switch off the ignition
- Wait 3 minutes before disconnecting the battery
- Disconnect the battery

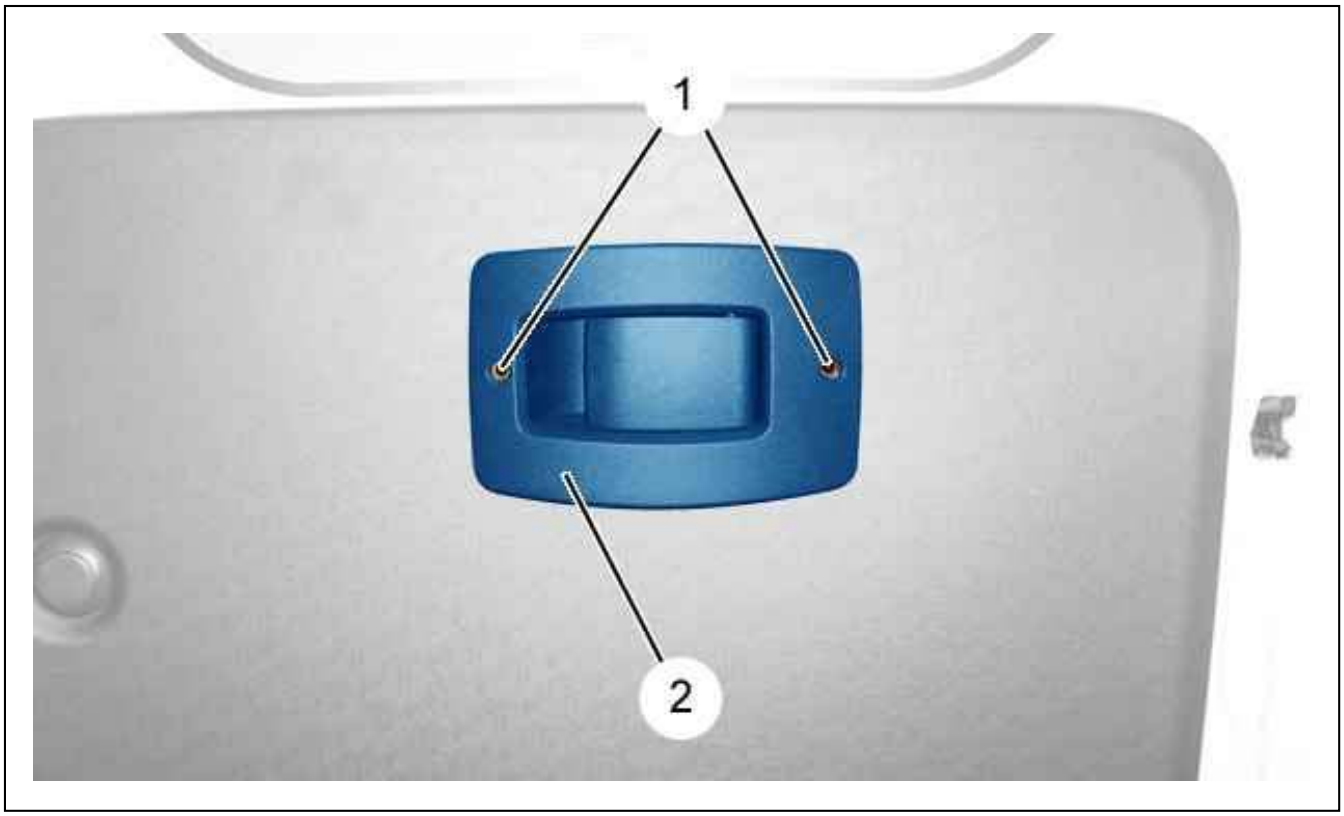

Figure : C4BM0ECD

Remove the bolts (1).
Detach : The inner handle (2).

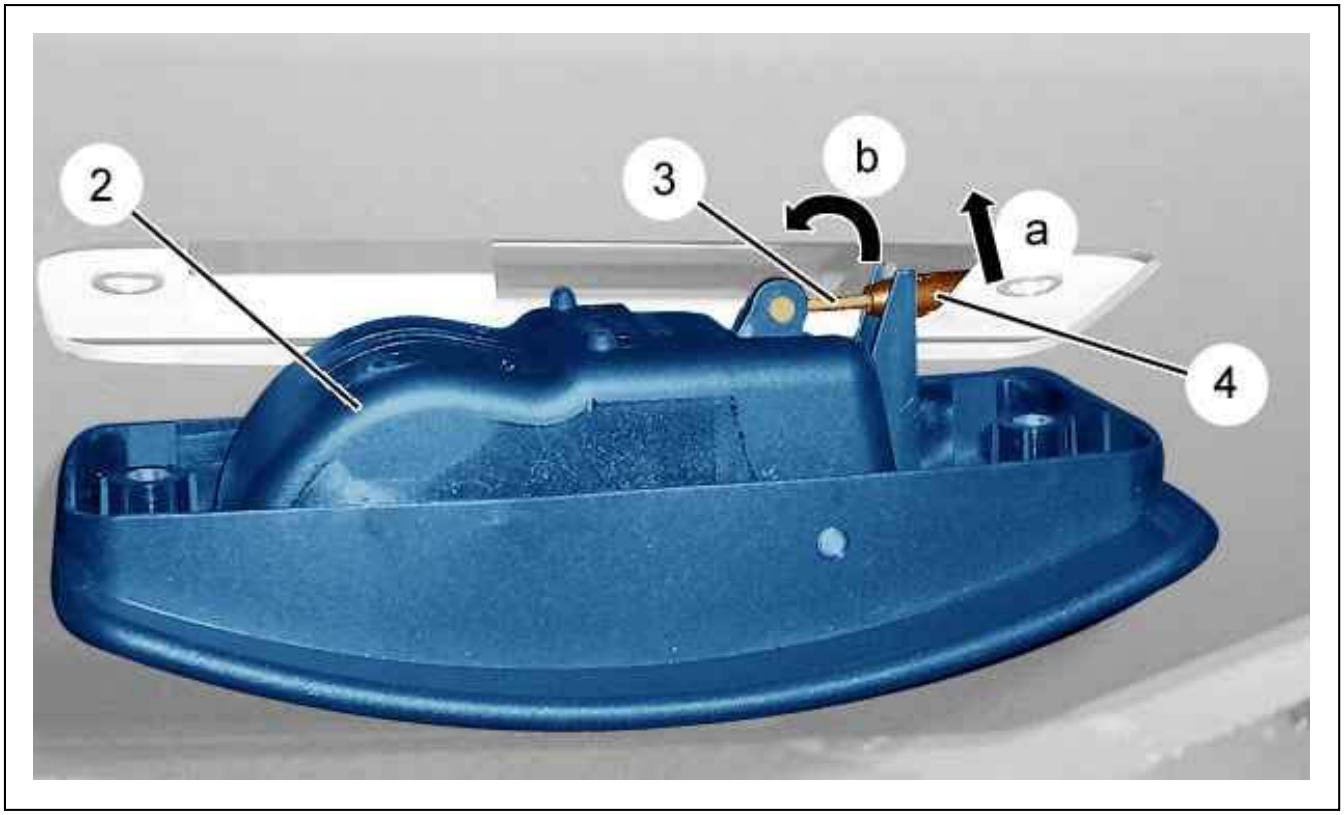

Figure : C4BM0EDD

Detach the cable guide (4) (following "a").

Pivot the cable (3) (following "b").
Remove the interior handle (2).

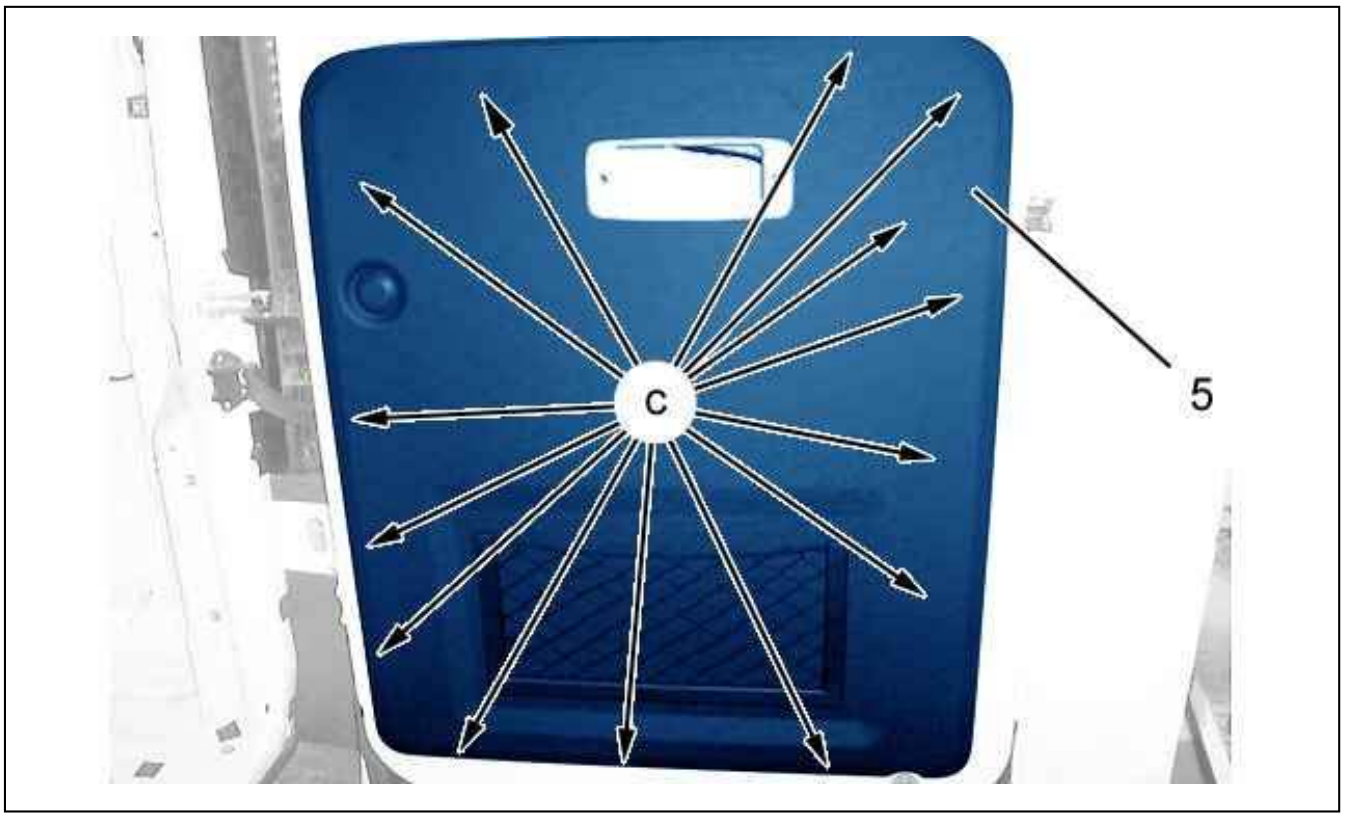

Figure : C4BM0EED

Detach the lower trim (5) (at "c").
Remove the lower lining (5).

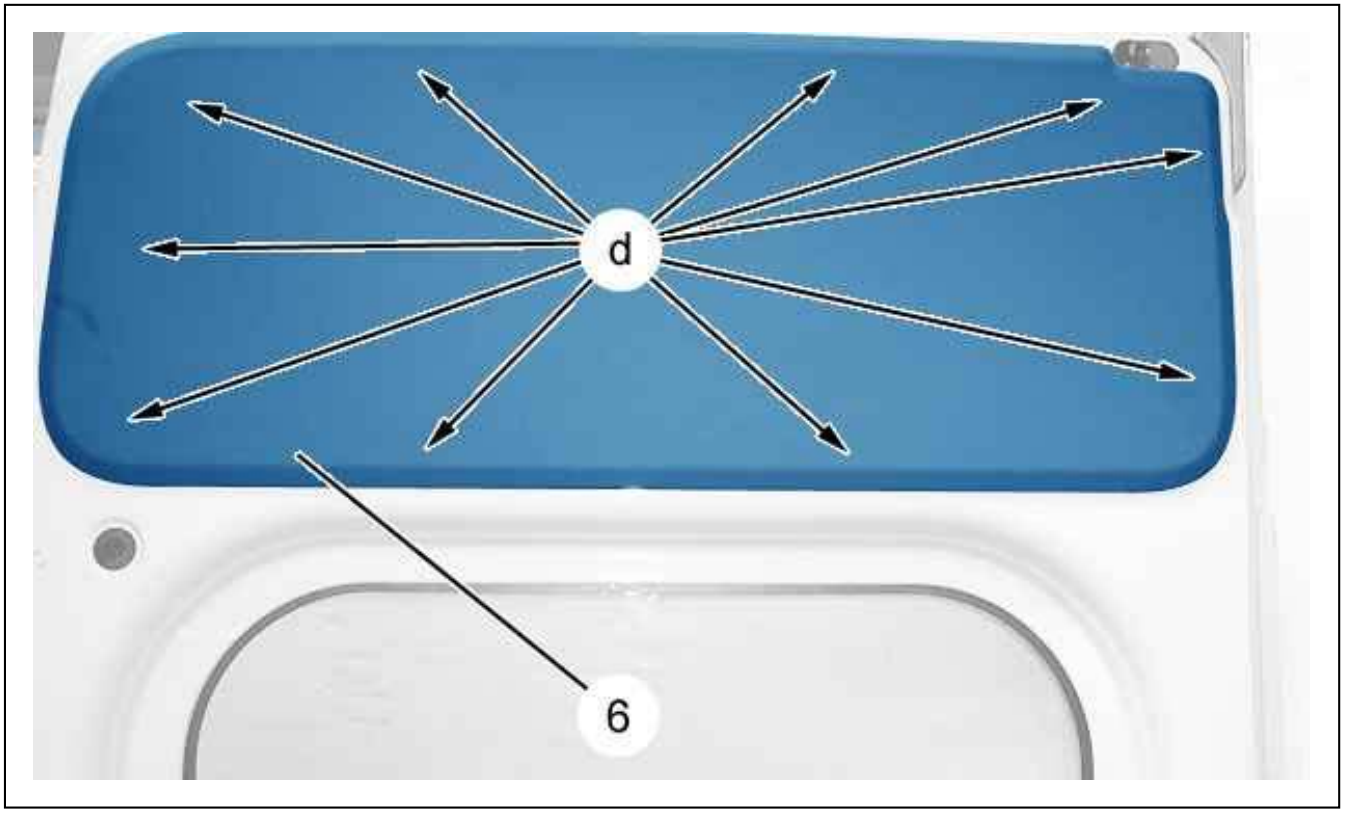

Figure : C4BM0EFD

Unclip : The top trim (6) (at "d").
Remove the upper trim (6).

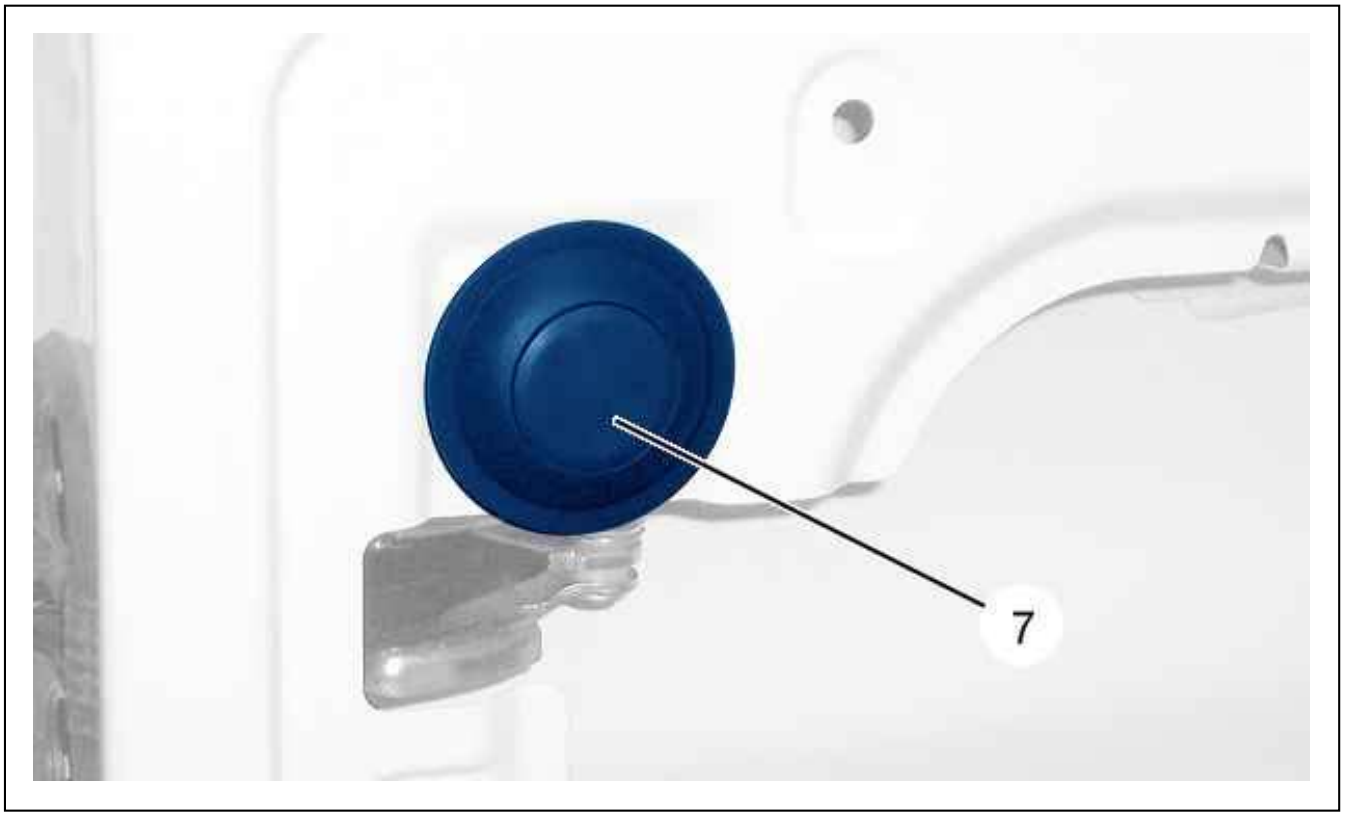

Figure : C4BM0EGD

Unclip : The press button (7) ; Using tool [1].
Remove : The press button (7).

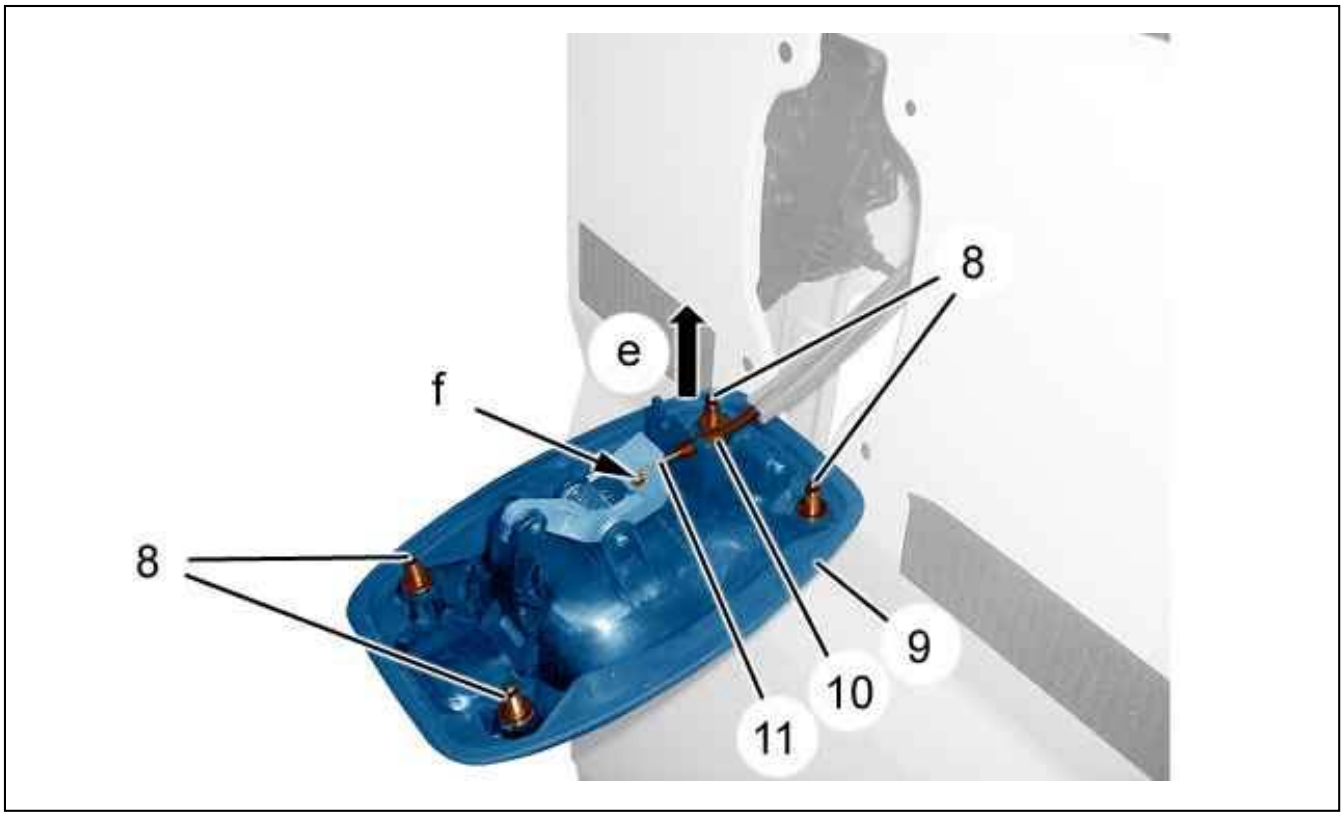

Figure : C5DM02ND

Remove the bolts (8).
Detach the sleeve (10) (following "e").
Release the cable (11) (at "f").
Remove the exterior handle (9).

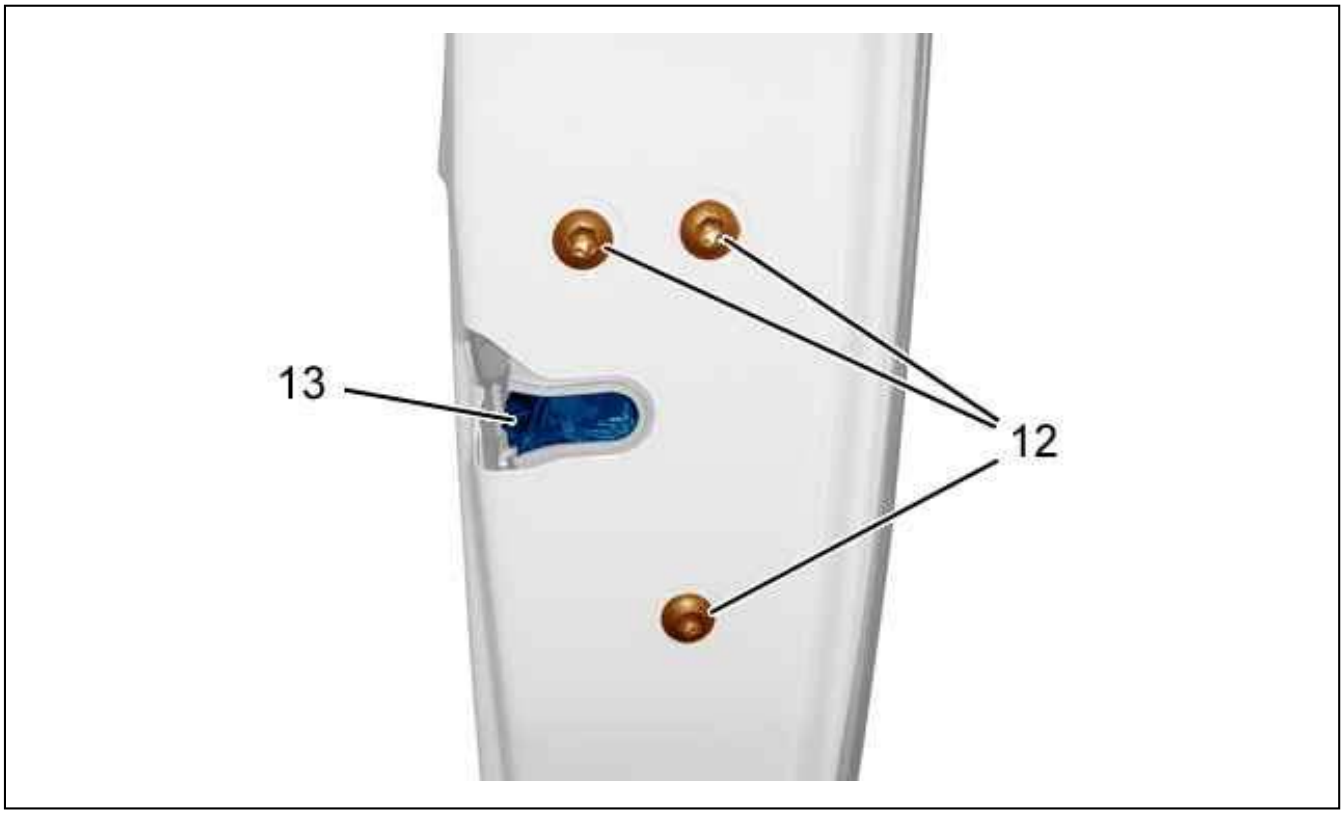

Figure : C4CM0TTD

Remove the screws (12) of the lock (13).



Figure : C4CM0TUD

Disconnect the connector (following "g").

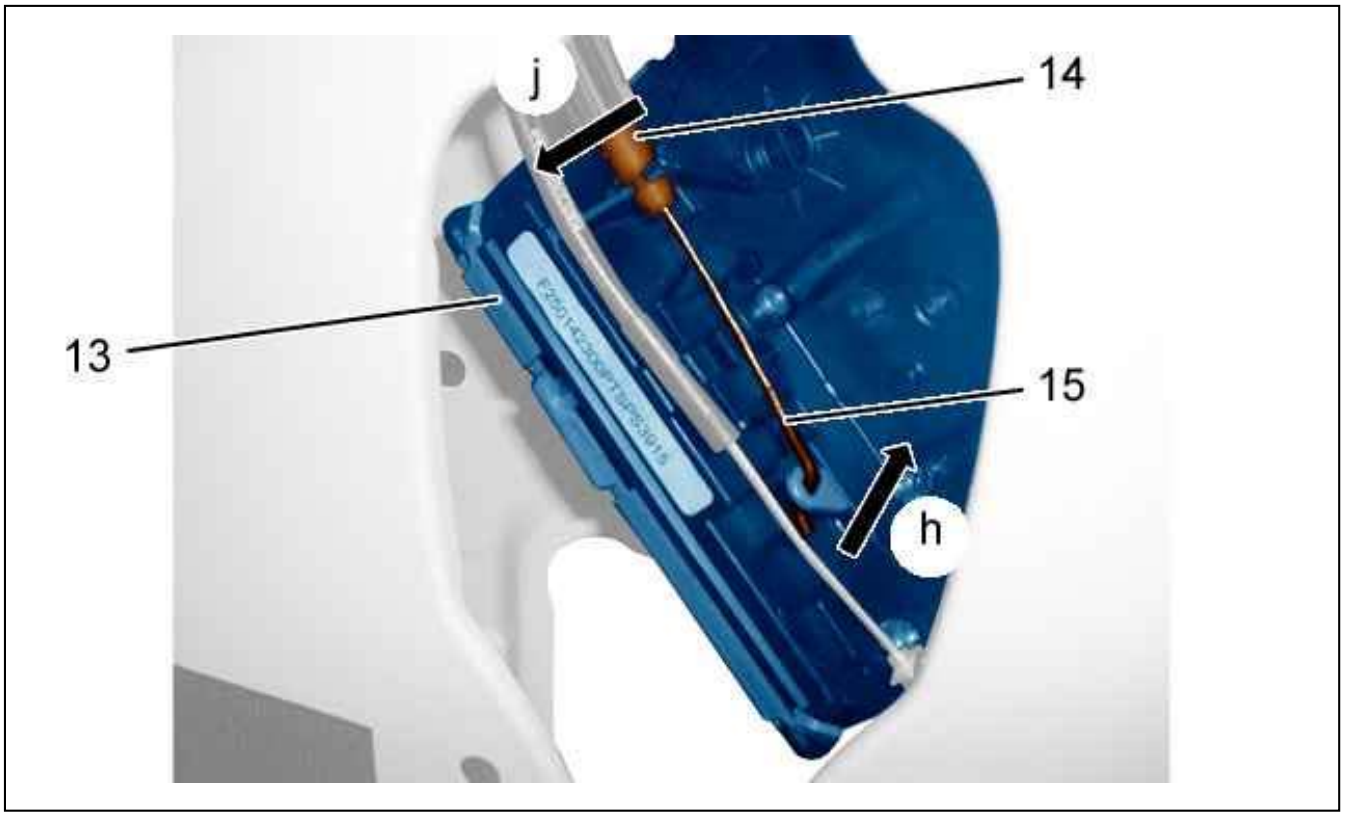

Figure : C5DM02PD

Remove :

- The cable guide (14) (following "j")
- The cable (15) (following "h")

Remove the lock (13).

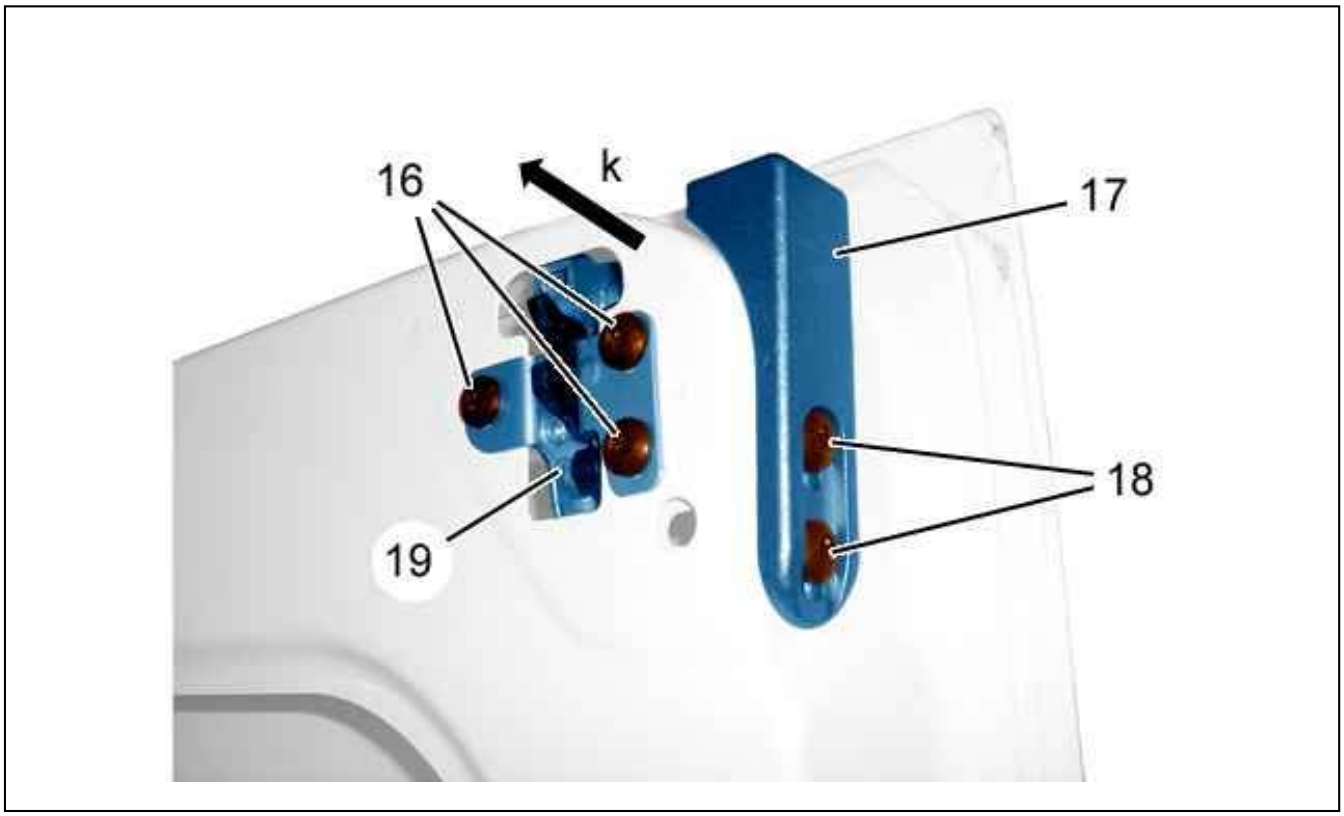

Figure : C4CM0TVD

Remove :

- The bolts (16)
- The top closing mechanism (19) (following "k")
- The bolts (18)
- The top abutment (17)

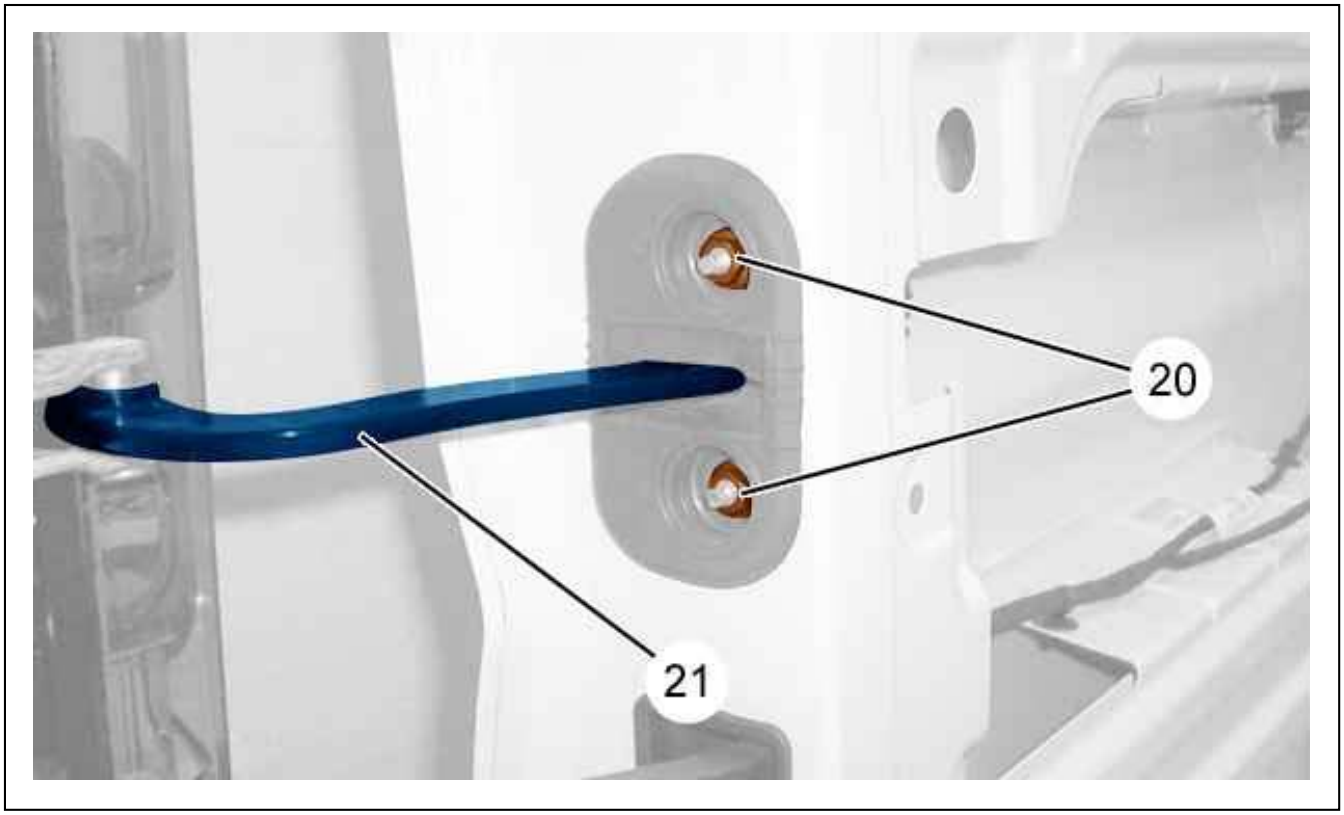

Figure : C4BM0EHD

Remove the bolts (20).
Detach : The door check strap (21).

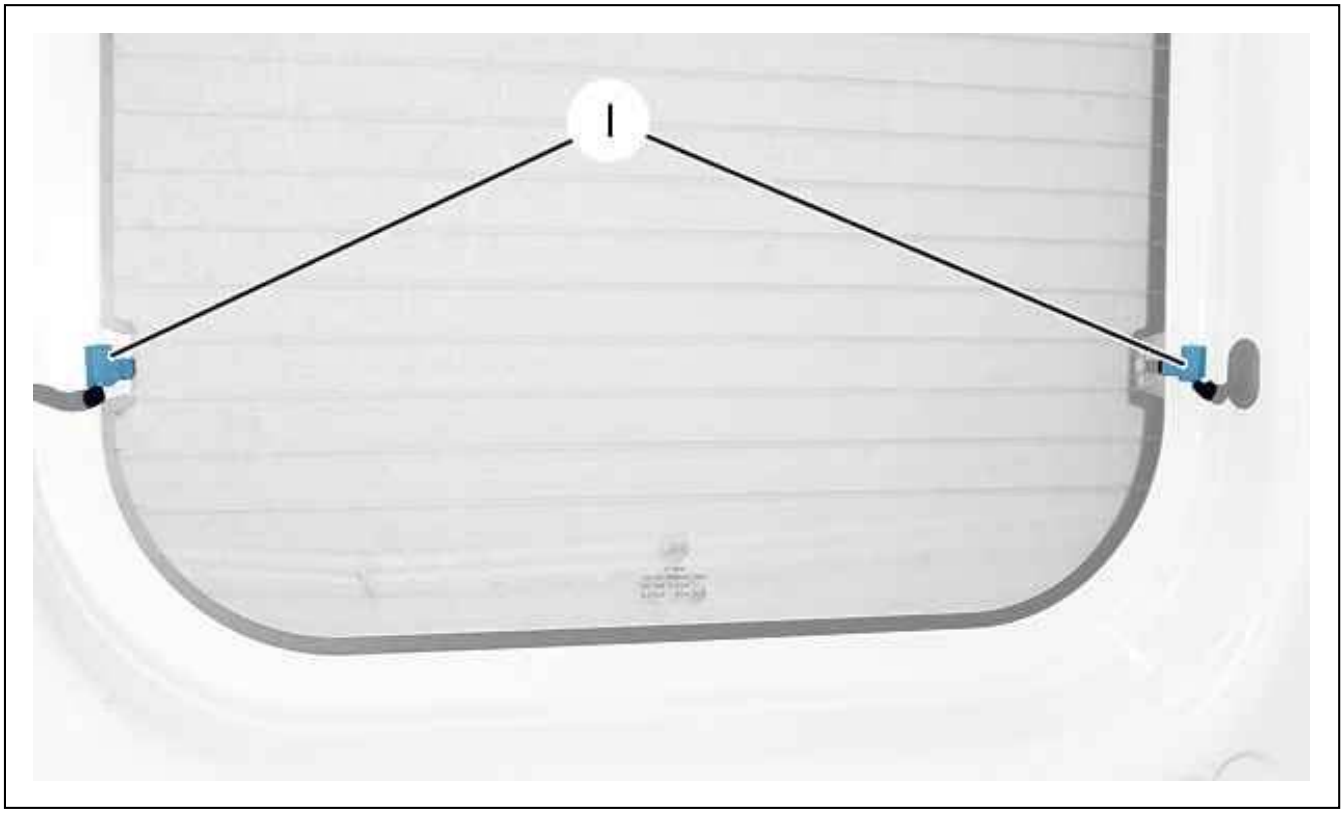

Figure : C4BM0EJD

Disconnect the connectors (at "I").

Remove : Hinged rear door glass .
Release the harness .

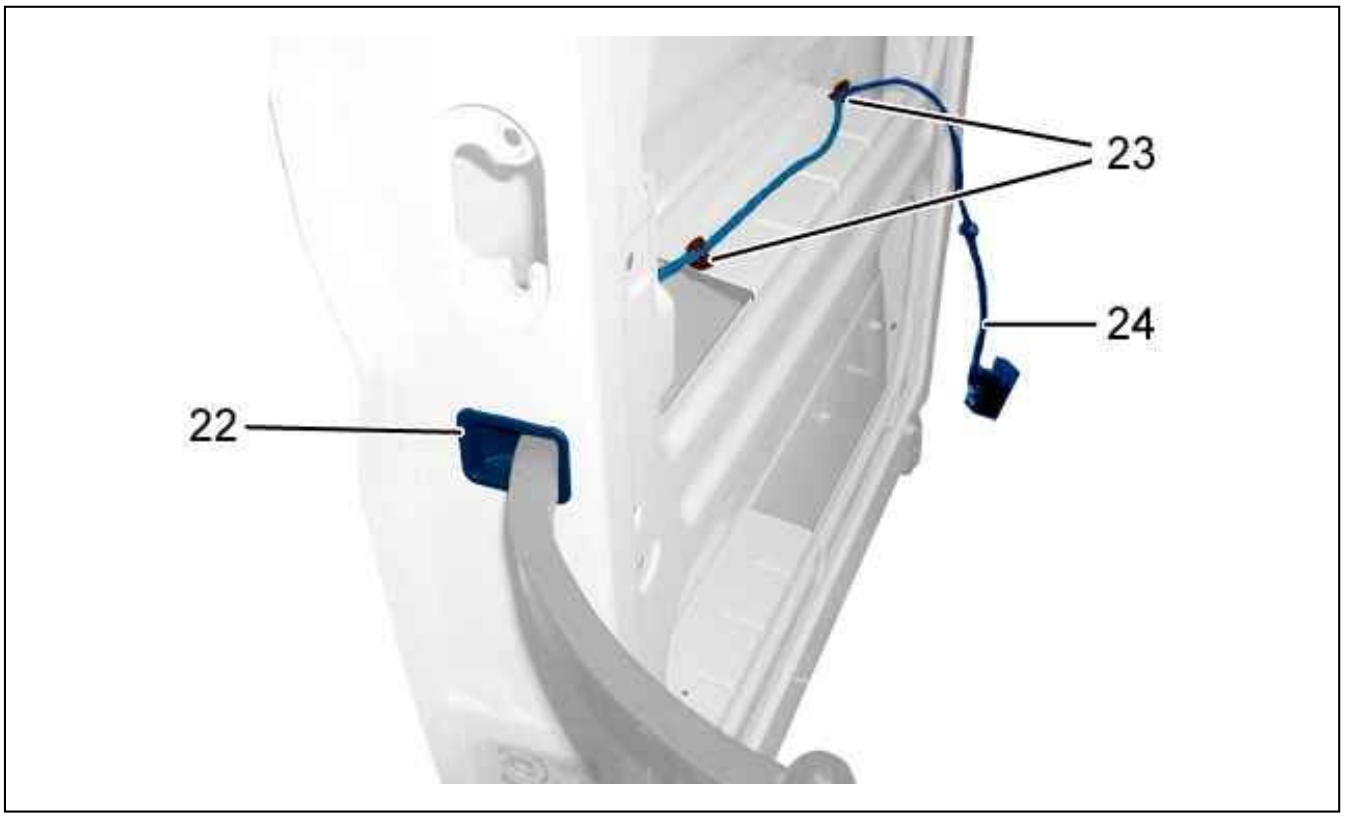

Figure : C4CM0TWD

Remove the clips (23).
Detach the protection (22) ; Using tool [1].
Remove the electric harness (24).

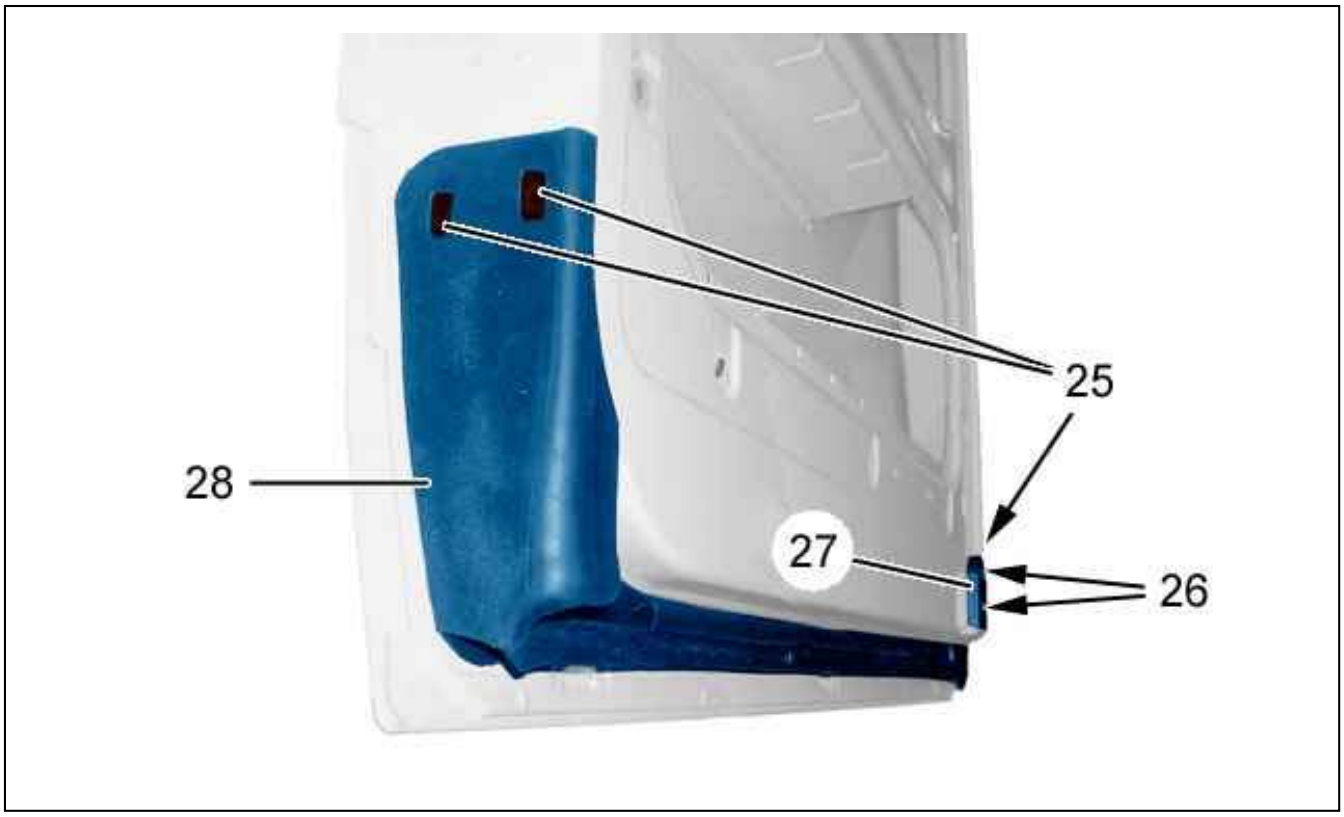

Figure : C4CM0TXD

Remove :

- The mountings (25)
- The door sill seal (28)
- The bolts (26)
- The bottom stop (27)

3. Re-assembling

Carry out the re-trim operations in the reverse order to the stripping operations.
Tighten :

- The bolts (1), (8), (20) to 1 ± 0,1 daN.m
- The bolts (12), (16), (18) to 2 ± 0,2 daN.m

Reconnect the battery.
Check all the equipment works.

REMOVING - REFITTING : REAR QUARTER WINDOW

ESSENTIAL : Observe the safety and cleanliness recommendations .

1. Tooling

Presentation :

- Glazing tools
- Glazing consumables

2. Removing

Remove :

- Sliding side door rail (right hand side)
- Headlining (LH side or RH side)

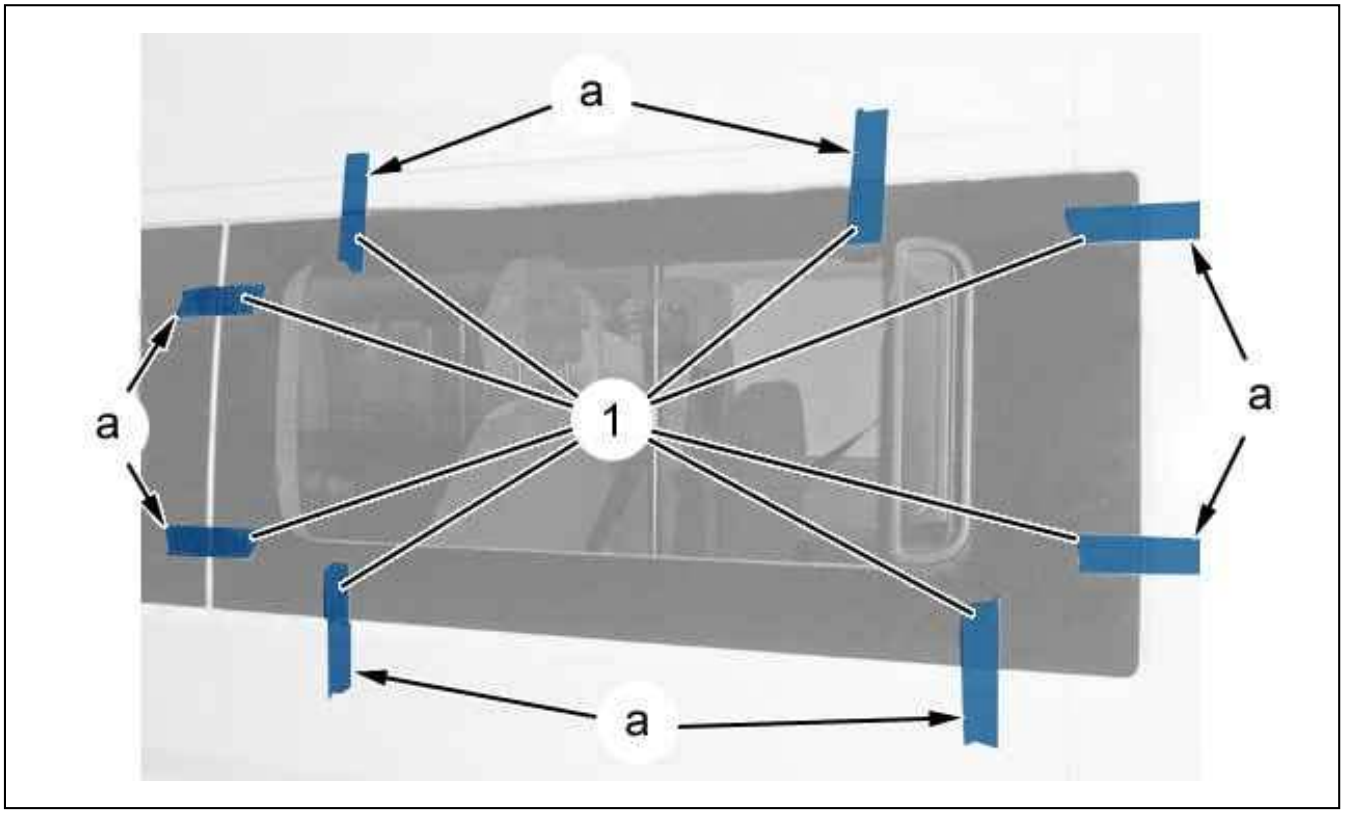

Figure : C5CM01TD

N.B. : If the rear quarter window is to be reused, align it and position adhesive tape (1) ; As indicated above (at "a").

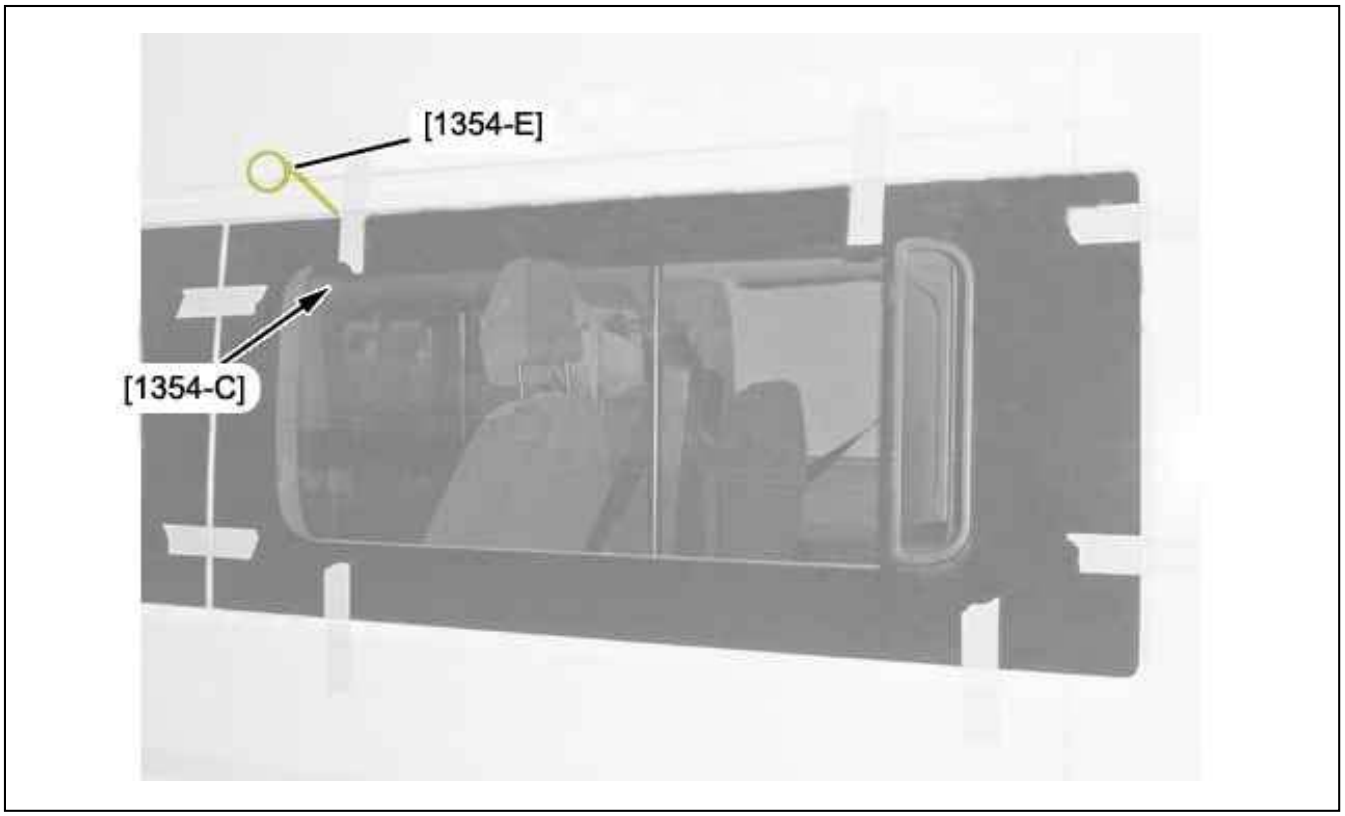

Figure : C5CG0K2D

Pass the awl [1354-C] through the bead of sealing adhesive, from the inside towards the outside.
Attach the cutting wire [1354-E] to the awl [1354-C].
Pass the cutting wire [1354-E] inside the vehicle.
Leave a sufficient length to permit fixing of the handles [1354-D].
Install the handles [1354-D] at each end of the cutting wire [1354-E].

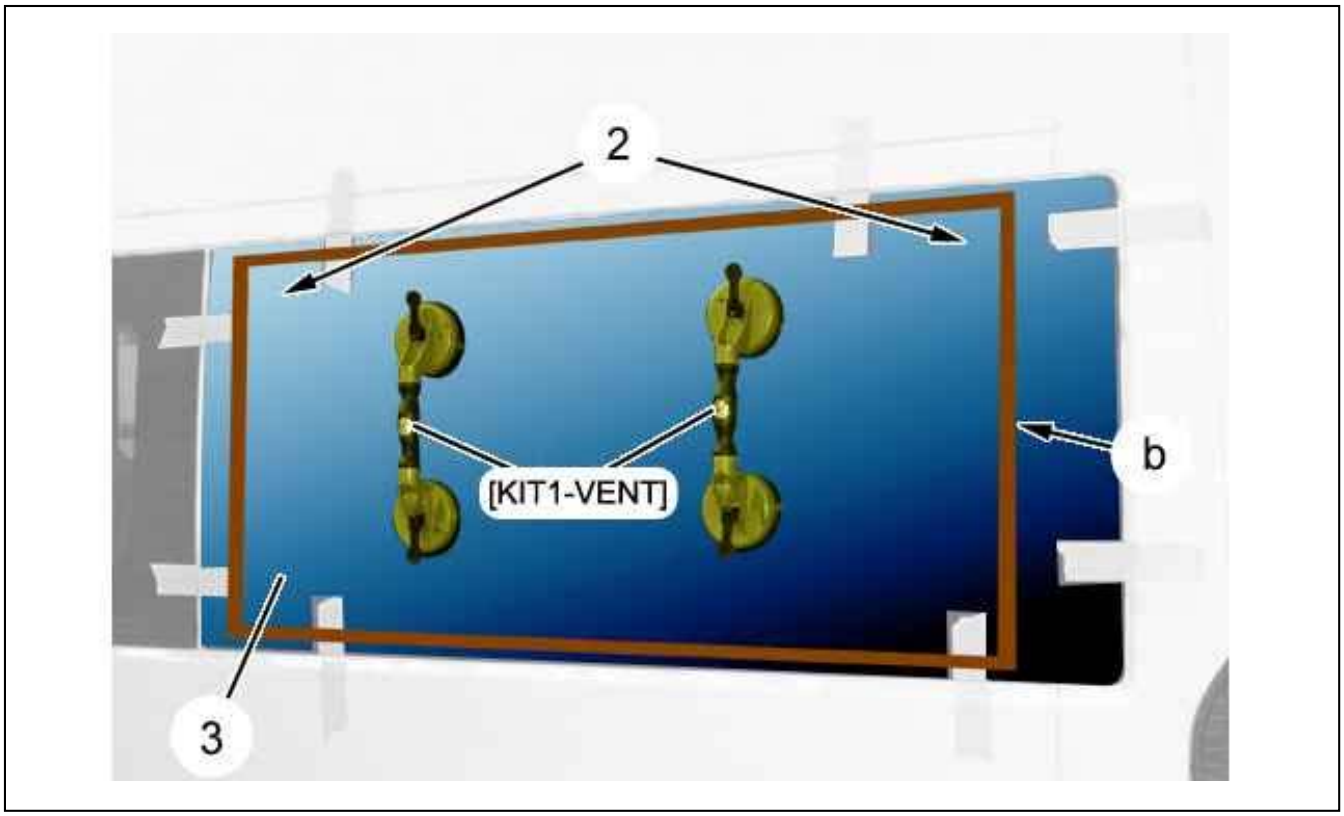

Figure : C5CG0K5D

Position : The double articulated suction pads [KIT1-VENT].
Two people are required to perform the following operation.
The indexing pins (2) must be cut.
Cut the sealing adhesive (at "b").

N.B. : At the slightest resistance of the wire while cutting, slacken it and assist it in passing the obstacle (Suppor shims, excessive thickness of the bead of adhesive or join between panels).

Remove the quarter window (3) ; Using the double hinged suction cups [KIT1-VENT].

3. Cleaning

3.1. Preparing the quarter window

Re-use of the quarter window :

- Fit the electric knife [FEIN-400E] with the blade N°146
- Remove the adhesive sealing bead
- Remove any dust using a clean cloth
- Only apply the primer to the zones laid bare

Fitting a new quarter window :

- Degrease the edge of the quarter window ; Using the degreaser
- Apply the glass primer provided in the bonding kit part number "A3"

N.B. : Only apply the primer to the zones laid bare.

3.2. Preparation of the aperture

On the remains of the bead of sealing adhesive :

- Fit the electric knife [FEIN-400E] with the blade N°146

- Remove the adhesive sealing bead
- Remove any dust using a clean cloth

On the new component :

- Degrease the aperture
- Apply the metal primer provided in the bonding kit part number "A3"
- Allow to dry for 10 mn

4. Refitting

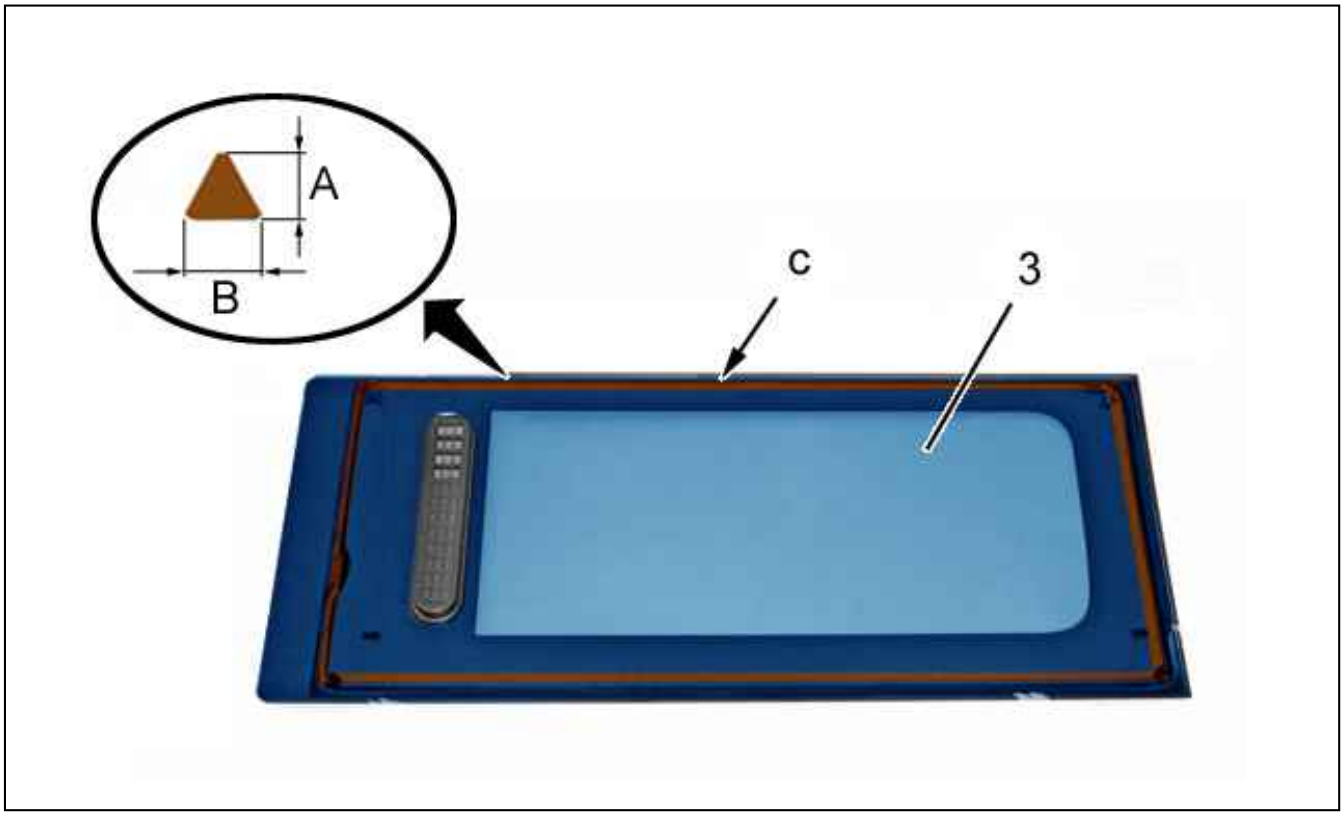

Figure : C5CM01WD

"A" = 12 mm .
"B" = 8 mm .
Cut the nozzle in triangular section to obtain a bead of sealing adhesive "B" wide and "A" deep.

ESSENTIAL : Always replace the seals .

4.1. Re-use of the quarter window

Apply the adhesive sealing bead on the surround of the quarter window (3) (at "c").

ESSENTIAL : Use of the two part product: the time for fitting the window on the vehicle and the start of extrusion of the sealing adhesive is 5 minutes.

Refit the rear quarter window :

- Using the double hinged suction cups [KIT1-VENT]
- Using adhesive tapes (1)

Check the clearances and flushness of the rear quarter light.

Lightly press on the periphery of the rear quarter window (3).
Clean the quarter window and its surround.

4.2. Fitting a new quarter window

Test fit the rear quarter window (3).
Position adhesive tape (1) as indicated above, then cut it (at "a").
Remove the quarter window (3).
Apply a bead of adhesive at "c" on the edge of the rear quarter window (3).

ESSENTIAL : Use of the two part product: the time for fitting the window on the vehicle and the start of extrusion of the sealing adhesive is 5 minutes.

Refit the rear quarter window :

- Using the double hinged suction cups [KIT1-VENT]
- Using adhesive tapes(1)

Check the clearances and flushness of the rear quarter light.
Lightly press on the periphery of the rear quarter window (3).
Clean the quarter window and its surround.

ESSENTIAL : Observe the vehicle immobilisation time following fitting of the windscreen recommended by the suppliers of the products used.

Continue the fitting operations in the reverse order to removal.
Check the sealing of the quarter window(3).
Clean the quarter window and its surround.

REMOVING - REFITTING : SIDE PANEL WINDOW

ESSENTIAL : Observe the safety and cleanliness recommendations.

1. Recommended tools

Glazing consumable .

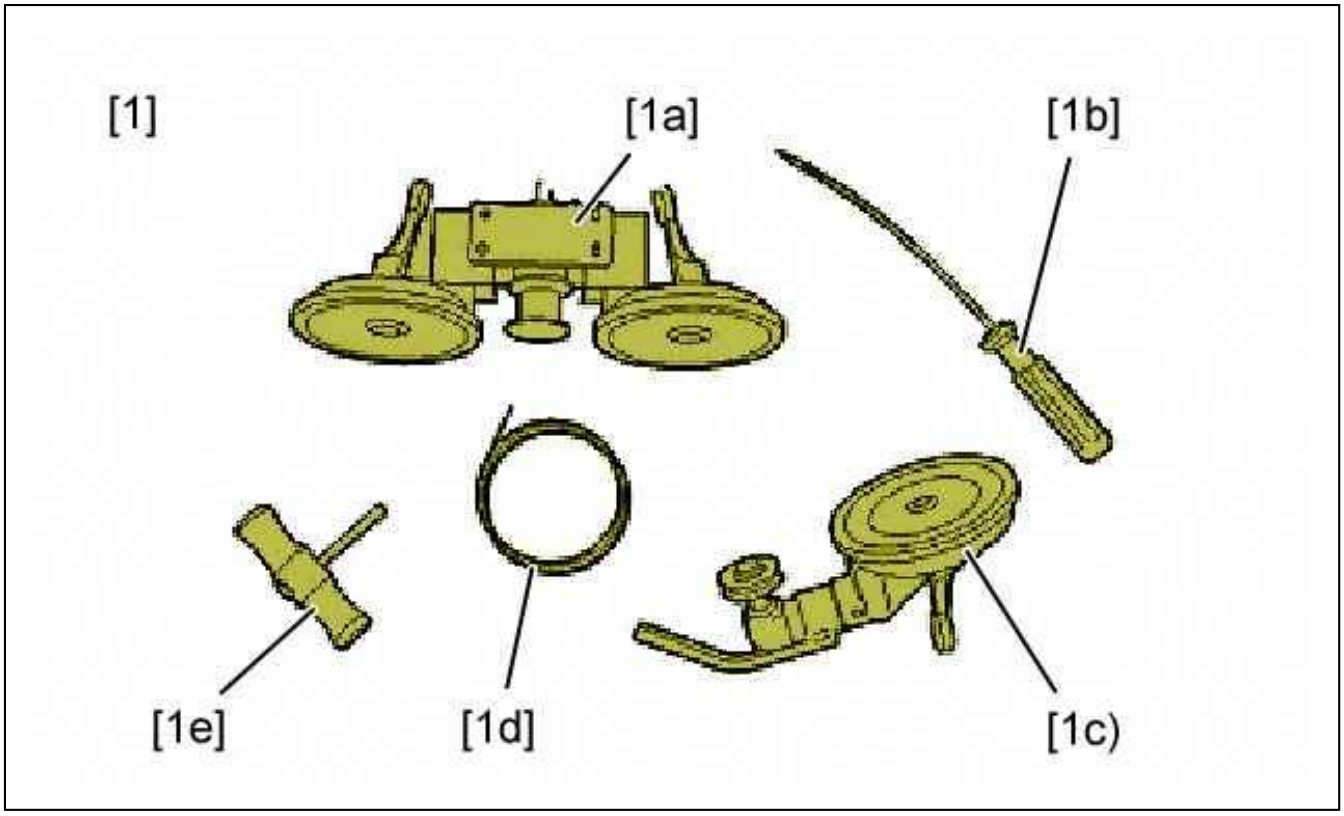

Figure : E5AP2ZQD

[1] Bonded windows removal kit (-).1354.
Composition of the toolkit :

- [1a] Guide roller device
- [1b] Awl
- [1c] Guiding roller
- [1d] Square section cutting wire
- [1e] handle

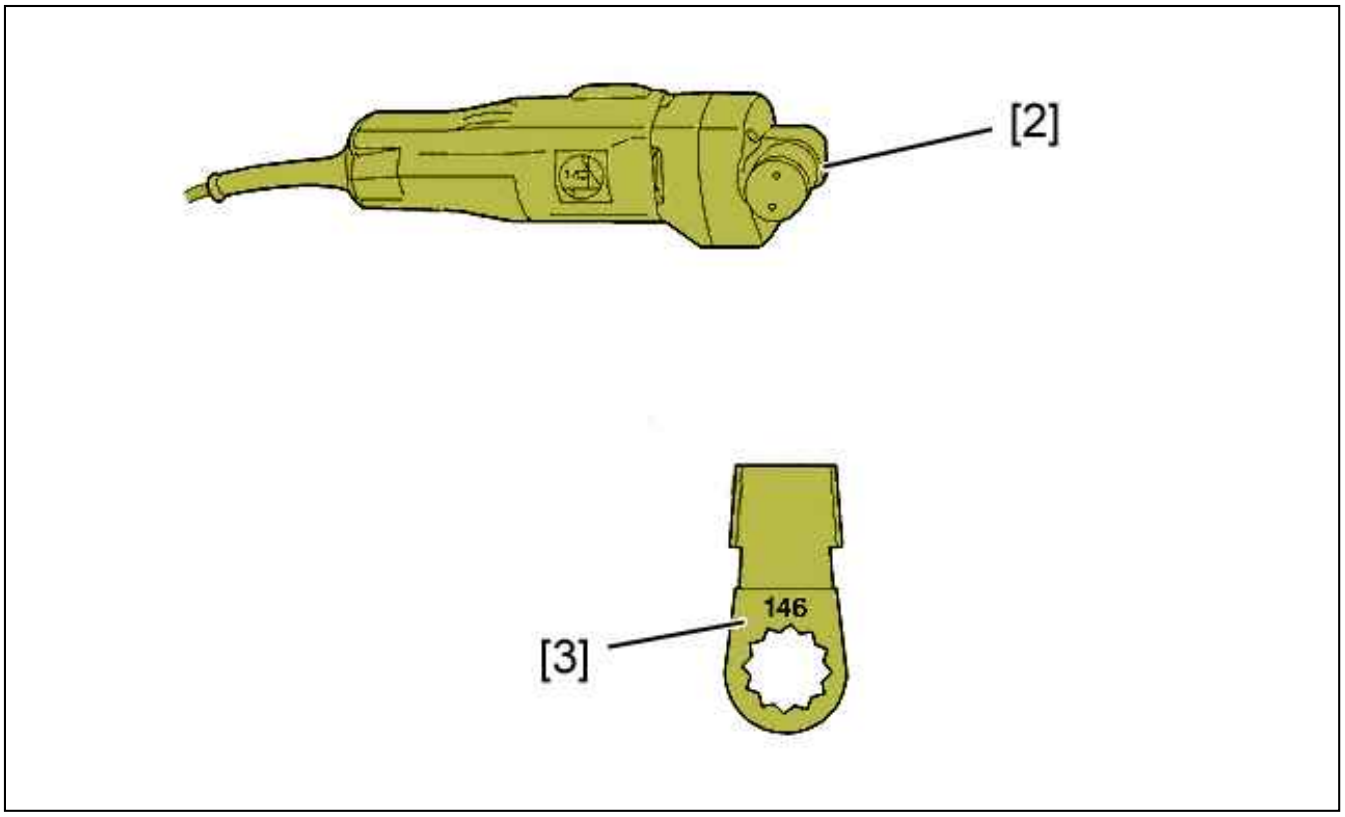

Figure : E5AP2ZRD

[2] electric knife.
[3] shovel blade N° 146.

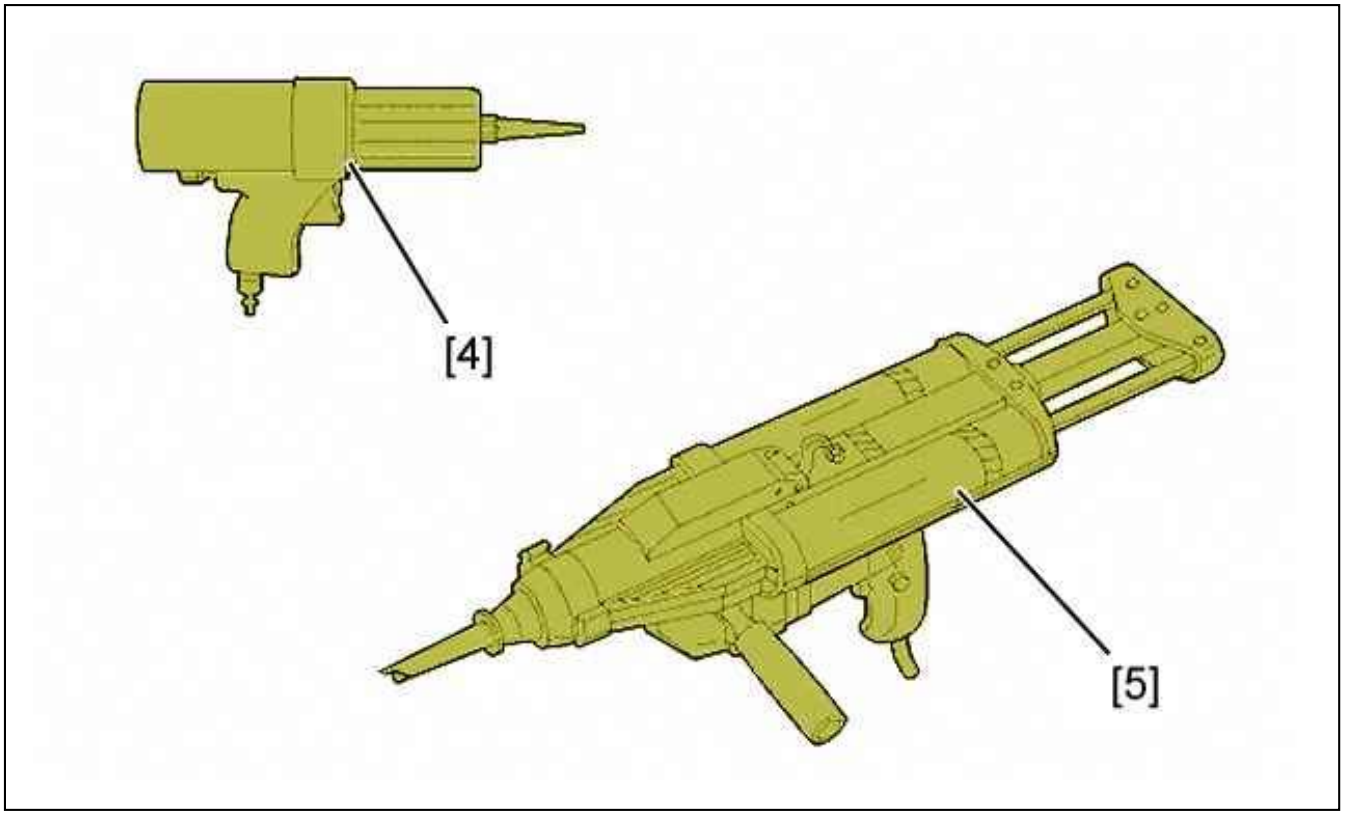

Figure : E5AP30AD

[4] Pneumatic gun (For one part cartridge).

[5] Electric gun (For two-part cartridge).

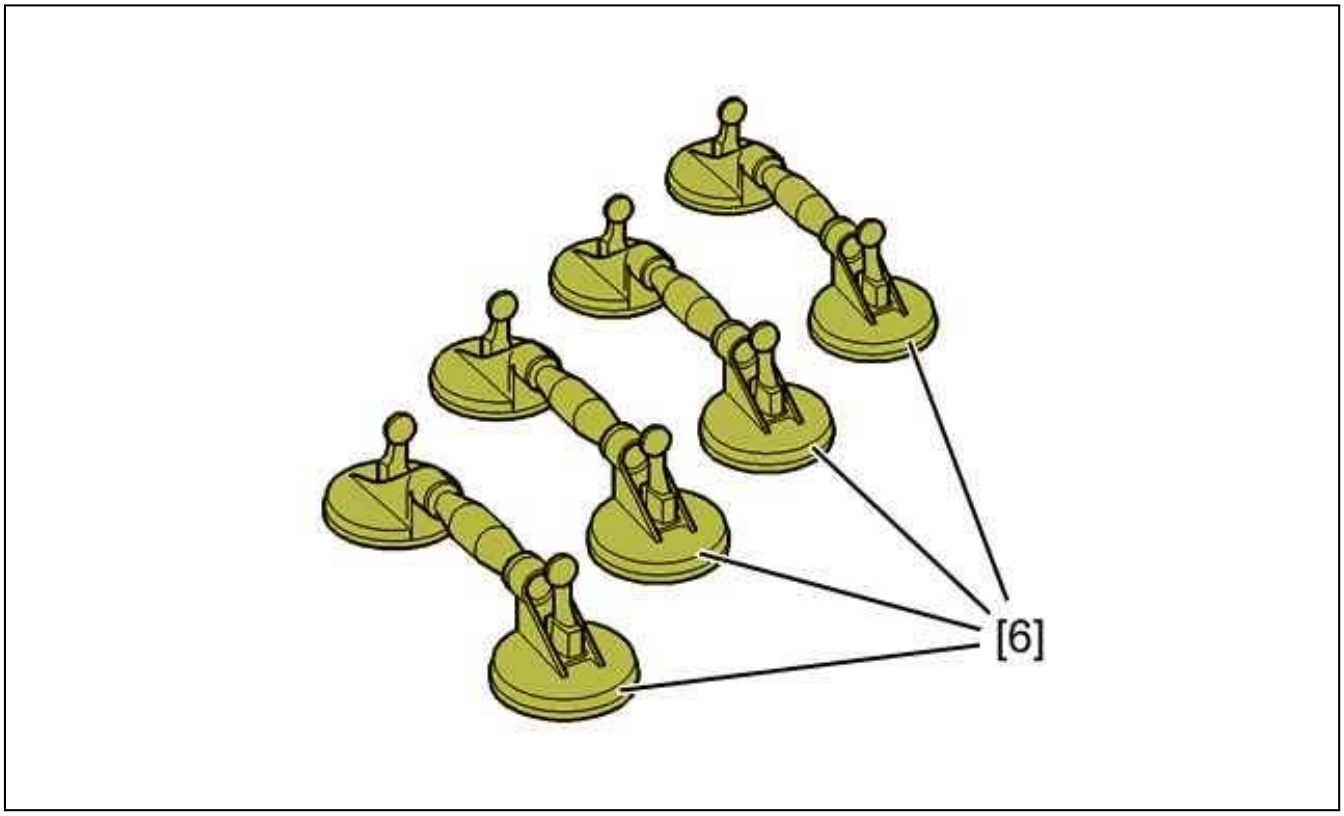

Figure : E5AP2ZTD

[6] Articulated suction pads (Reference P.R9776.Y0).

2. Removing

2.1. Mobile glass

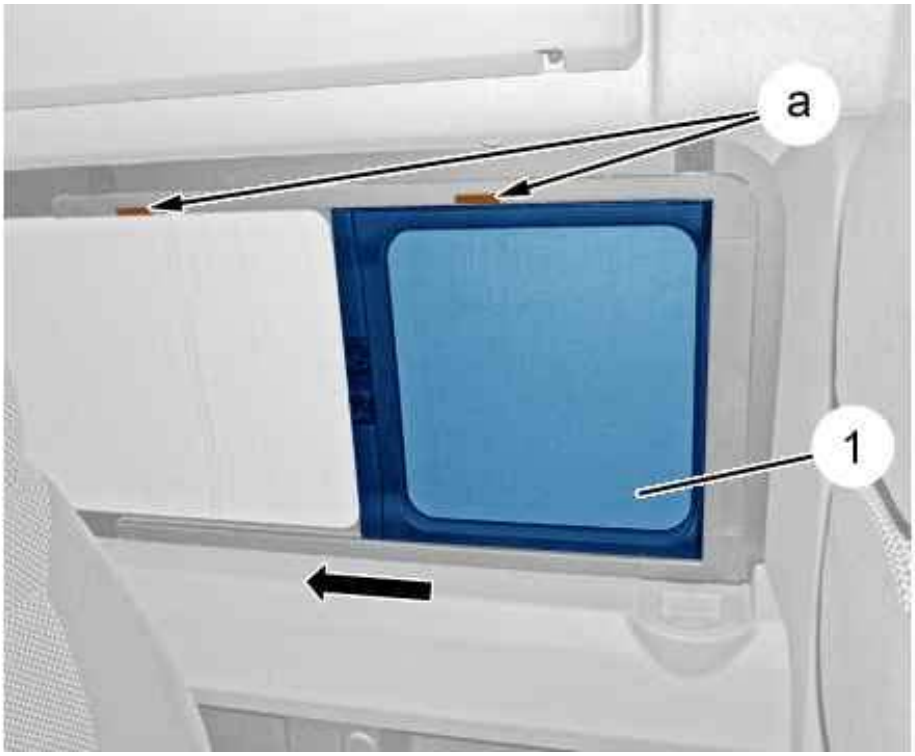

Figure : C5CM01YD

Withdraw the trim covers (at "a").
Open : The wind-down (1) (following the arrow).

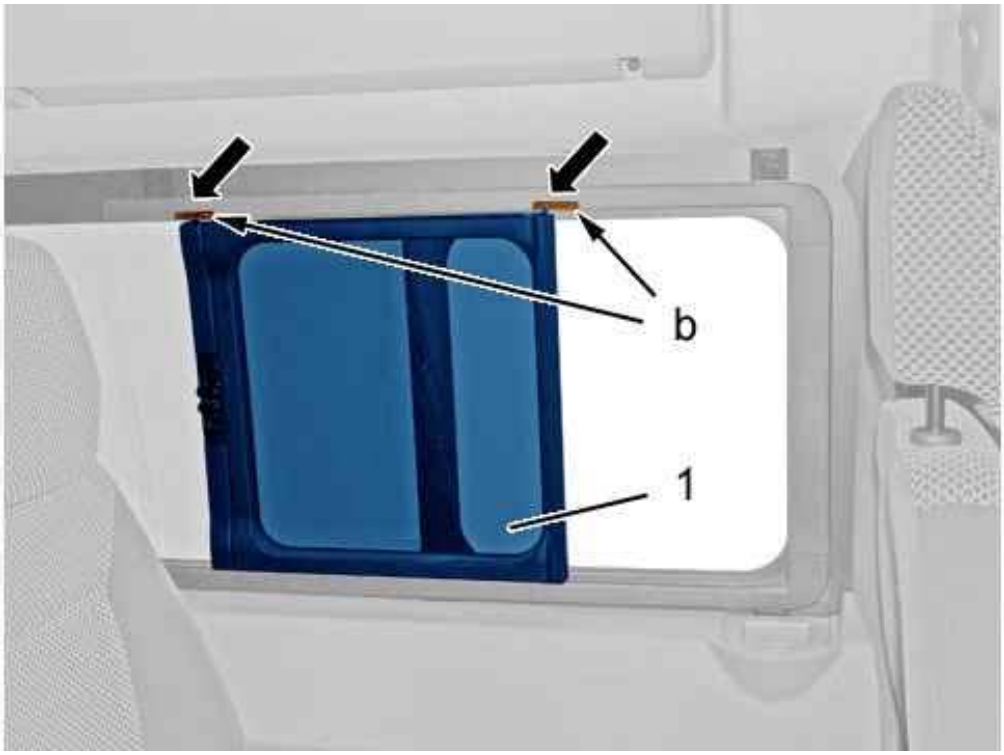

Figure : C5CM01ZD

Detach the moving window (1) through the openings(at "b").

Remove : The wind-down (1) (as per arrows).

2.2. Fixed glass

Remove the headlining (left hand part).

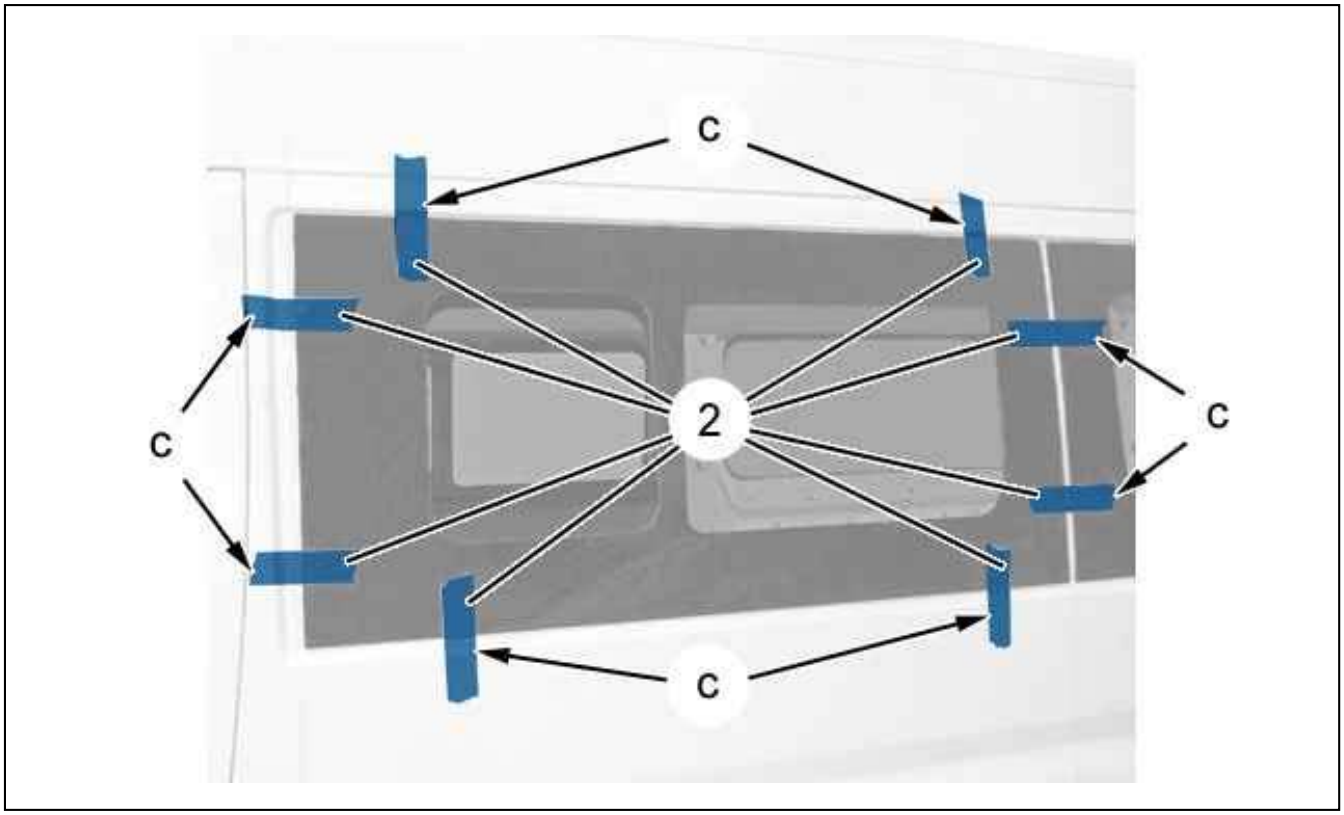

Figure : C5CM020D

N.B. : If the window is to be reused, align it and affix adhesive tape (2)(at "c").

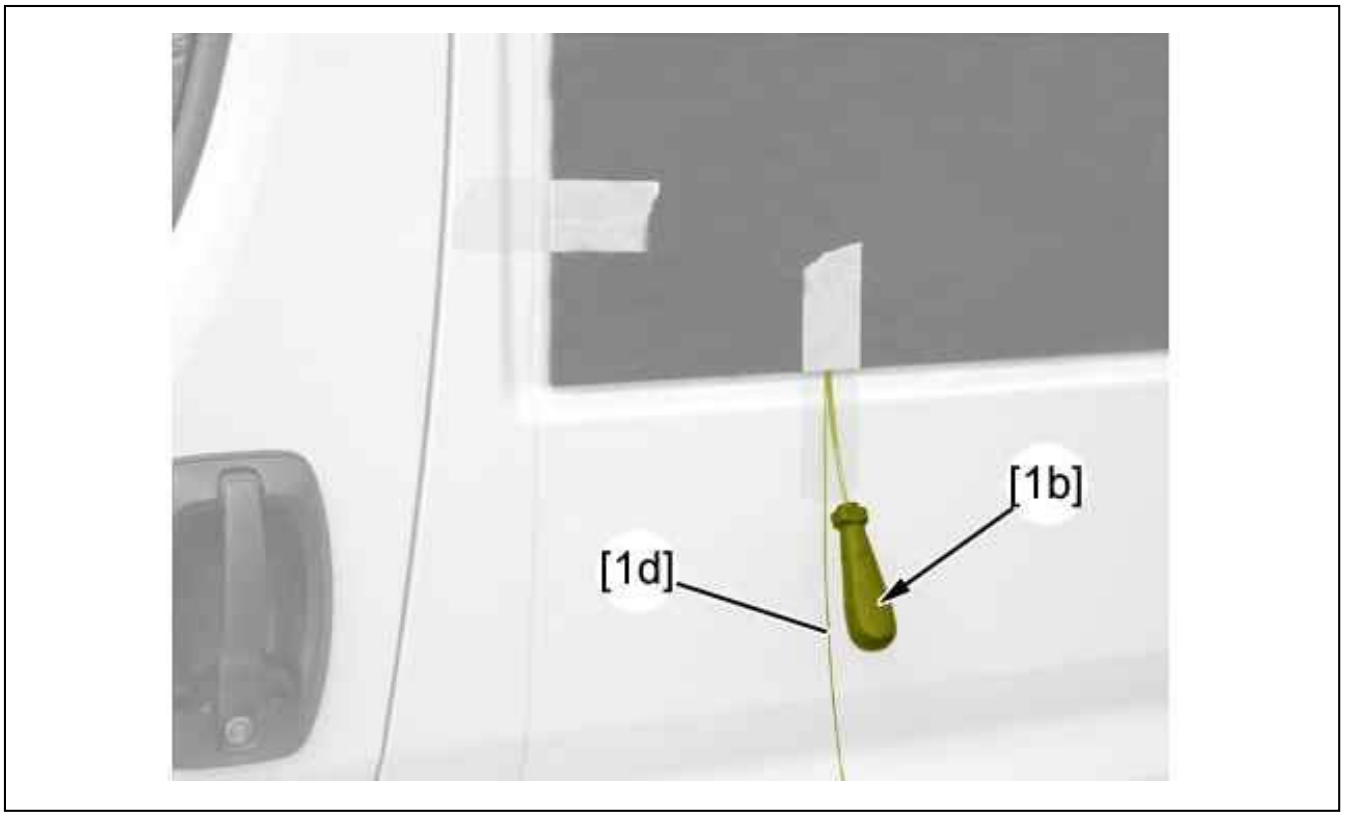

Figure : C5CM021D

Pass the awl [1b] through the bead of sealing adhesive, from the inside towards the outside.
Attach the cutting wire [1d] to the awl [1b].
Pass the cutting wire [1d] inside the vehicle.
Leave a sufficient length to permit fixing of the handles [1e].
Install the handles [1e] at each end of the cutting wire [1d].

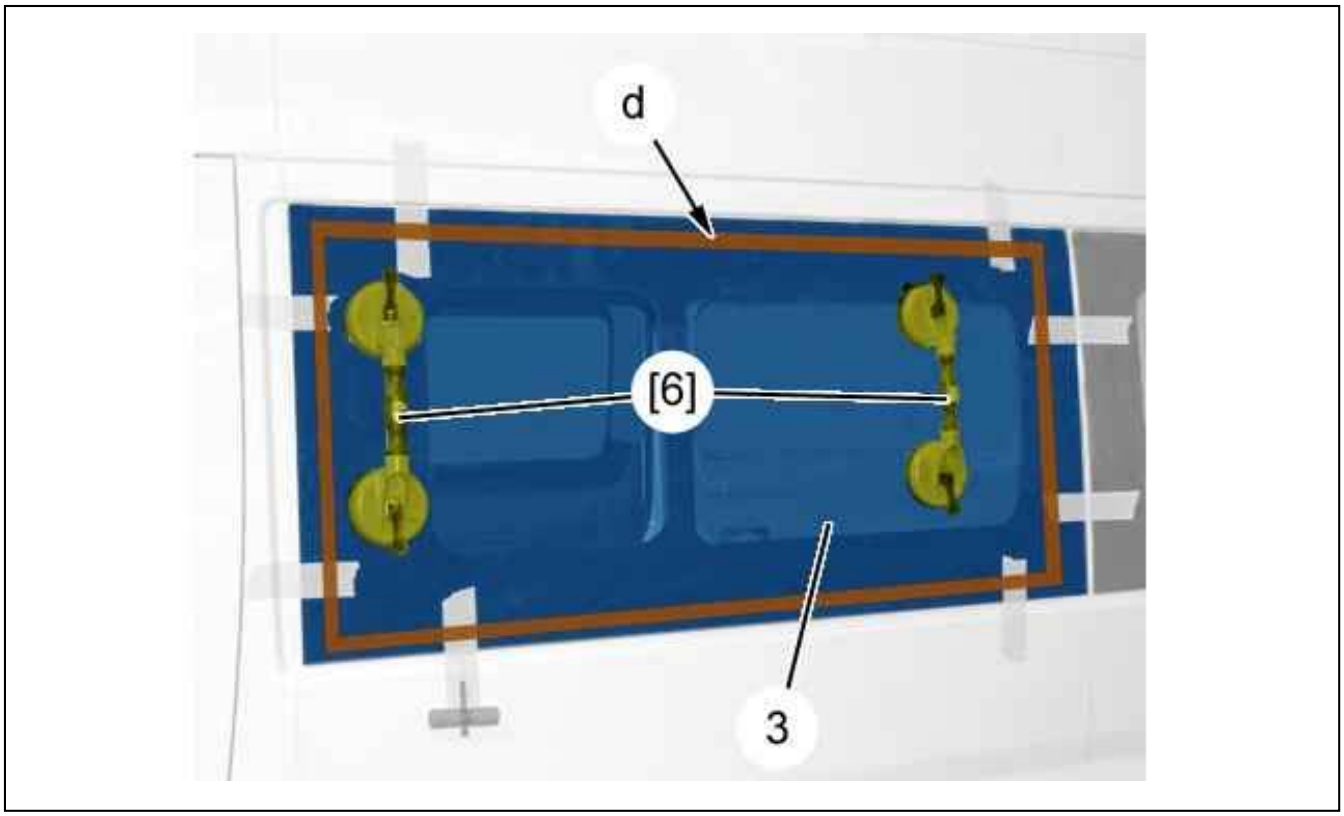

Figure : C5CM022D

Position : The double articulated suction pads [6].

CAUTION : Two people are required to perform the following operation.

The indexing pins must be cut.
Cut the sealing adhesive (at "d").

N.B. : At the slightest resistance of the wire while cutting, slacken it and assist it in passing the obstacle (Suppor shims, excessive thickness of the bead of adhesive or join between panels).

Remove : The side panel window (3) ; Using the double hinged suction cups [6].

3. Cleaning

3.1. Preparation : Side panel window

Reusing the glass :

- Fit the electric knife [2] with the blade [3]
- Remove the adhesive sealing bead
- Remove any dust using a clean cloth
- Only apply the primer to the zones laid bare

Fitting a new side panel window :

- Degrease the edge of the glass with the degreaser
- Apply the glass primer provided in the bonding kit part number "A3"

N.B. : Only apply the primer to the zones laid bare.

3.2. Preparation of the aperture

On the remains of the bead of sealing adhesive :

- Fit the electric knife [2] with the blade [3]
- Remove the adhesive sealing bead
- Remove any dust using a clean cloth

On the new component :

- Degrease the aperture
- Apply the metal primer provided in the bonding kit part number "A3"
- Allow to dry for 10 mn

4. Refitting

4.1. Reusing the side panel window

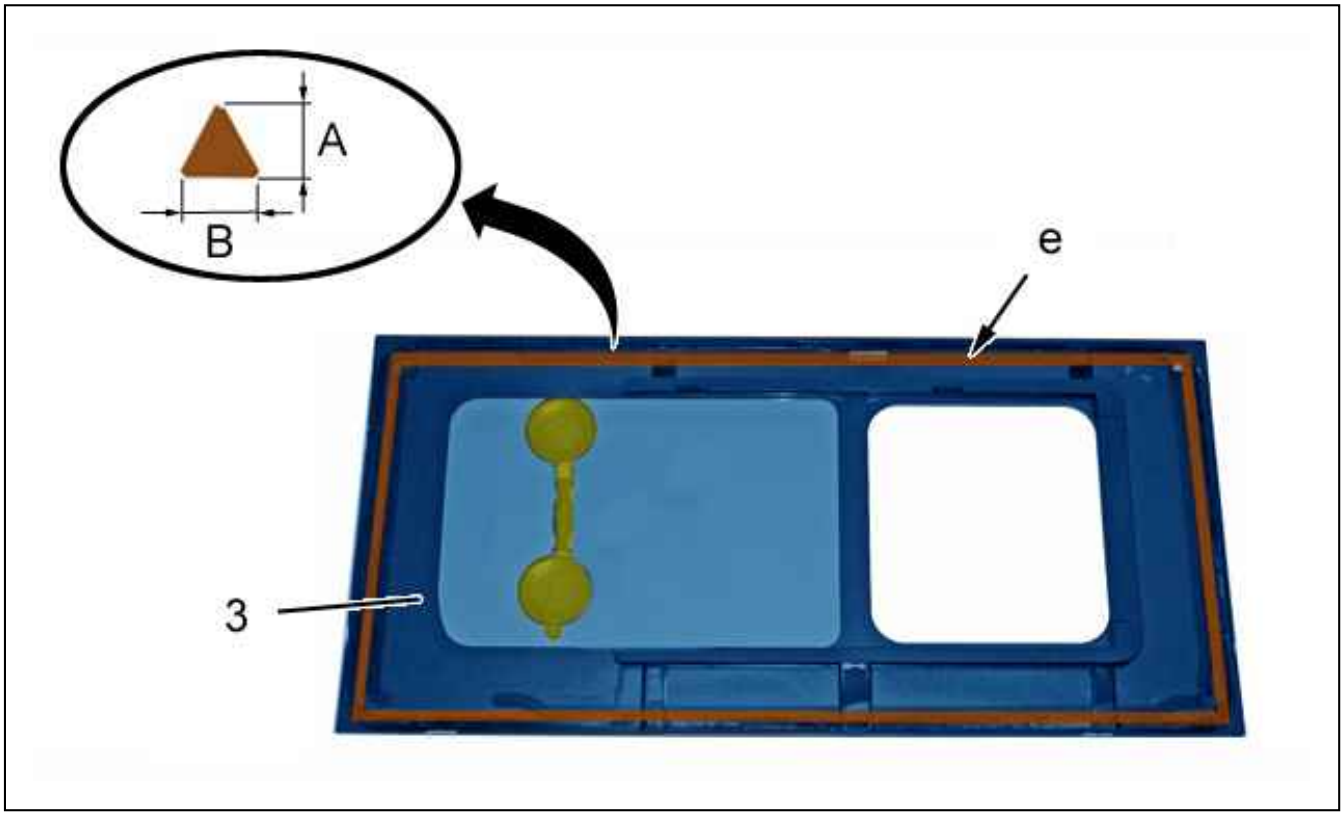

Figure : C5CM023D

"A" = 12 mm .
"B" = 8 mm .
Cut the nozzle in triangular section to obtain a bead of sealing adhesive "B" wide and "A" deep.

ESSENTIAL : Always replace : The faulty seals.

Apply the bead of adhesive sealant around the periphery of the glass (3) (at "e") (using tools [4] or [5]).

ESSENTIAL : Use of the two part product: the time for fitting the window on the vehicle and the start of extrusion of the sealing adhesive is 5 minutes.

Refit : The side panel window :

- Using the double hinged suction cups [6]

- Using adhesive tapes (2)

Press gently on the periphery of the side panel window(3).
Clean the side panel window and its periphery.

4.2. Fitting a new side panel window

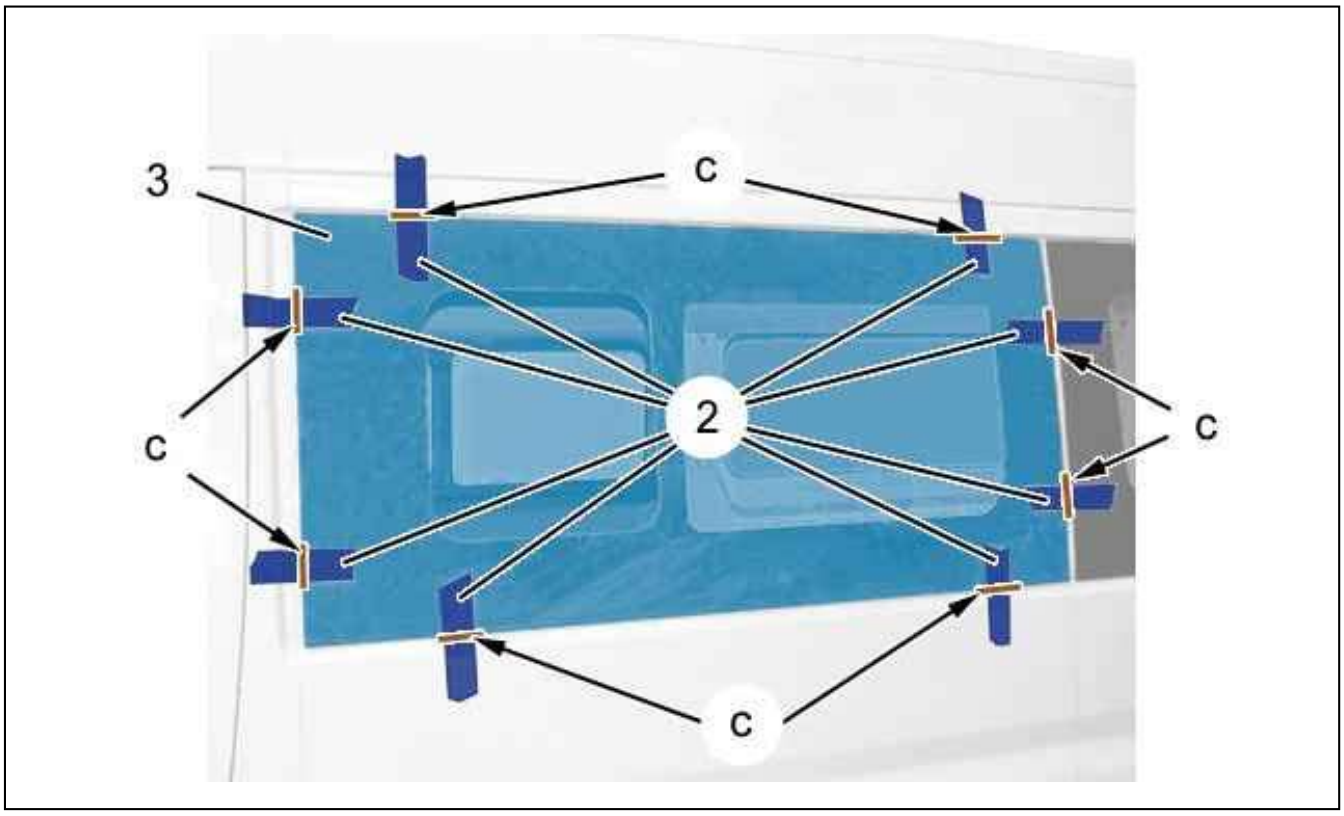

Figure : C5CM024D

Test fit the side panel window (3).
Position the adhesive strips (2).
Cut the tape (at "c").
Remove : The side panel window (3).
Apply the bead of adhesive sealant around the periphery of the glass (3) (at "d") (using tools [4] or [5]).

ESSENTIAL : Use of the two part product: the time for fitting the window on the vehicle and the start of extrusion of the sealing adhesive is 5 minutes.

Refit : The side panel window :

- Using the double hinged suction cups [6]
- Using adhesive tapes (2)

Press gently on the periphery of the side panel window (3).
Clean the side panel window and its periphery.

ESSENTIAL : Observe the vehicle immobilisation time following fitting of the windscreen recommended by the suppliers of the products used.

Fit : The wind-down (Proceed in the reverse order to removal).
Continue the fitting operations in the reverse order to removal.
Check the sealing of the side panel window (3).

Clean the side panel window and its periphery.

REPAIR : IMPACT ON THE LAMINATED WINDOWS PRINCIPLES OF REPAIR

ESSENTIAL : Observe the safety and cleanliness recommendations .

1. Tooling

1 Repair kit (Manual injection).
1 Repair kit (Injection using the pressure/vacuum pump).

N.B. : Refer to the tools catalogue.

2. Windscreen repair area

CAUTION : Read the repair manual in full.

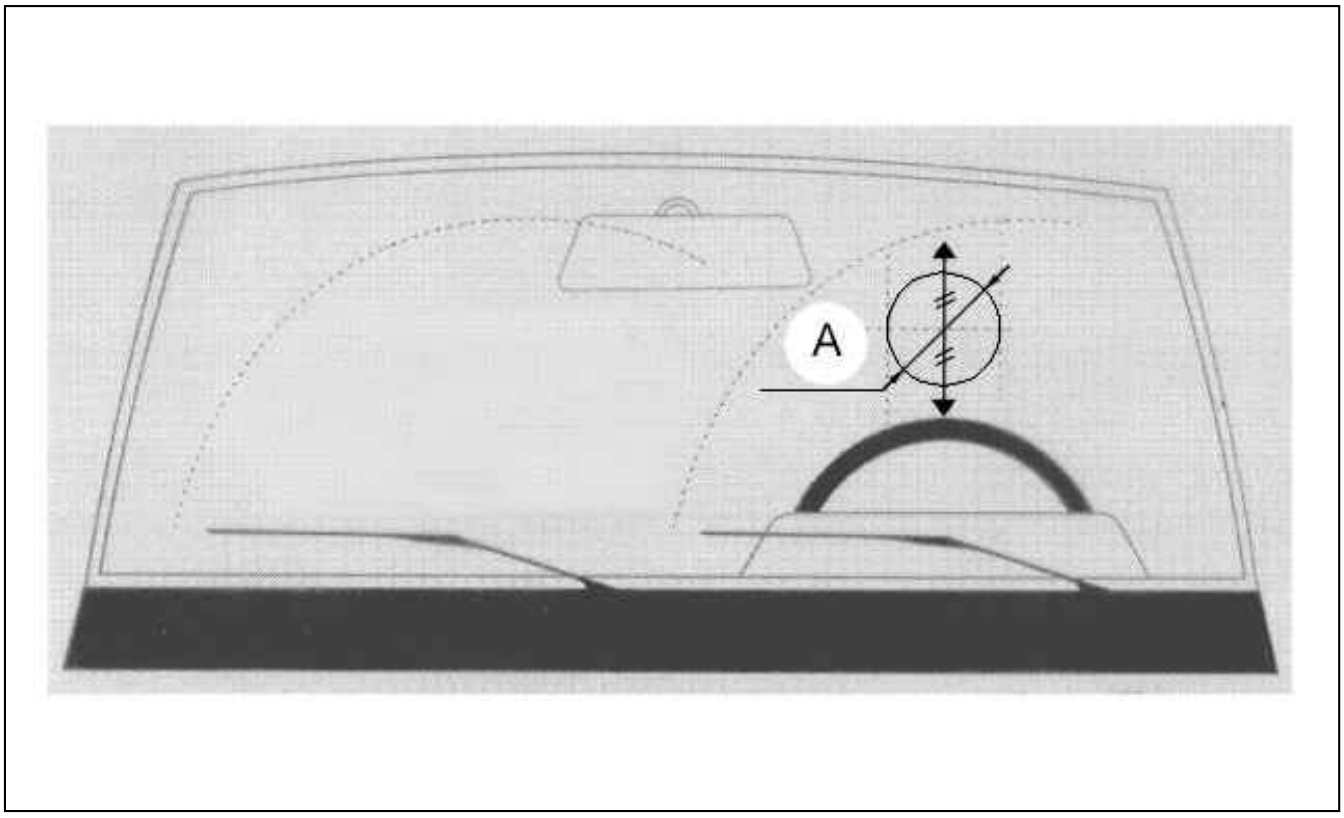

Figure : C5CM06WD

"A" = 300 mm.

ESSENTIAL : The repair of a windscreen in the field of vision of the driver, see "A", is prohibited.

ESSENTIAL : If the impact is more than 50 mm : Replace the windscreen.

3. Types of impact

3.1. Bubble or half-bubble impacts

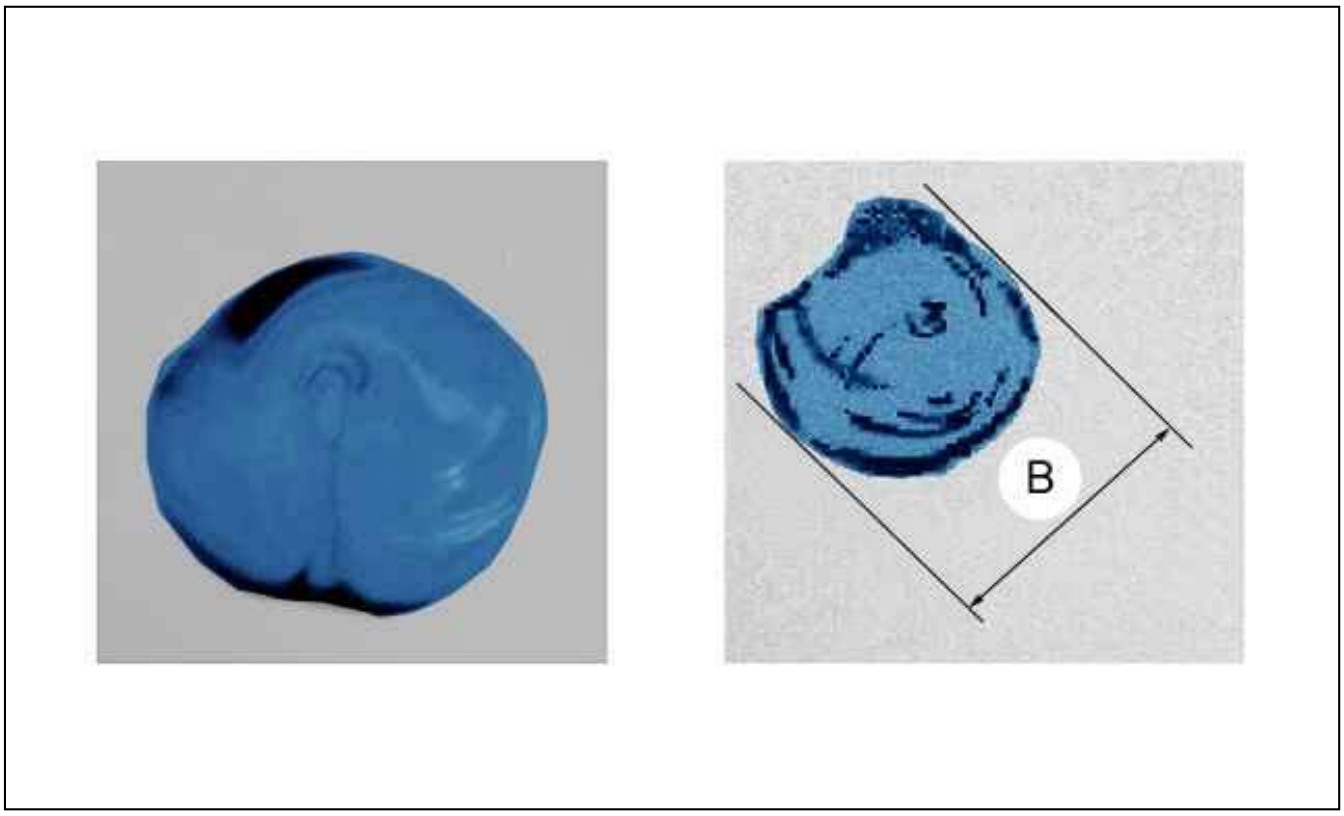

Figure : C5CM06XD

"B" = 20 mm (Max).

N.B. : Formation of a small hole at the point of impact and a core in the form of a cone is created.

3.2. Star impact

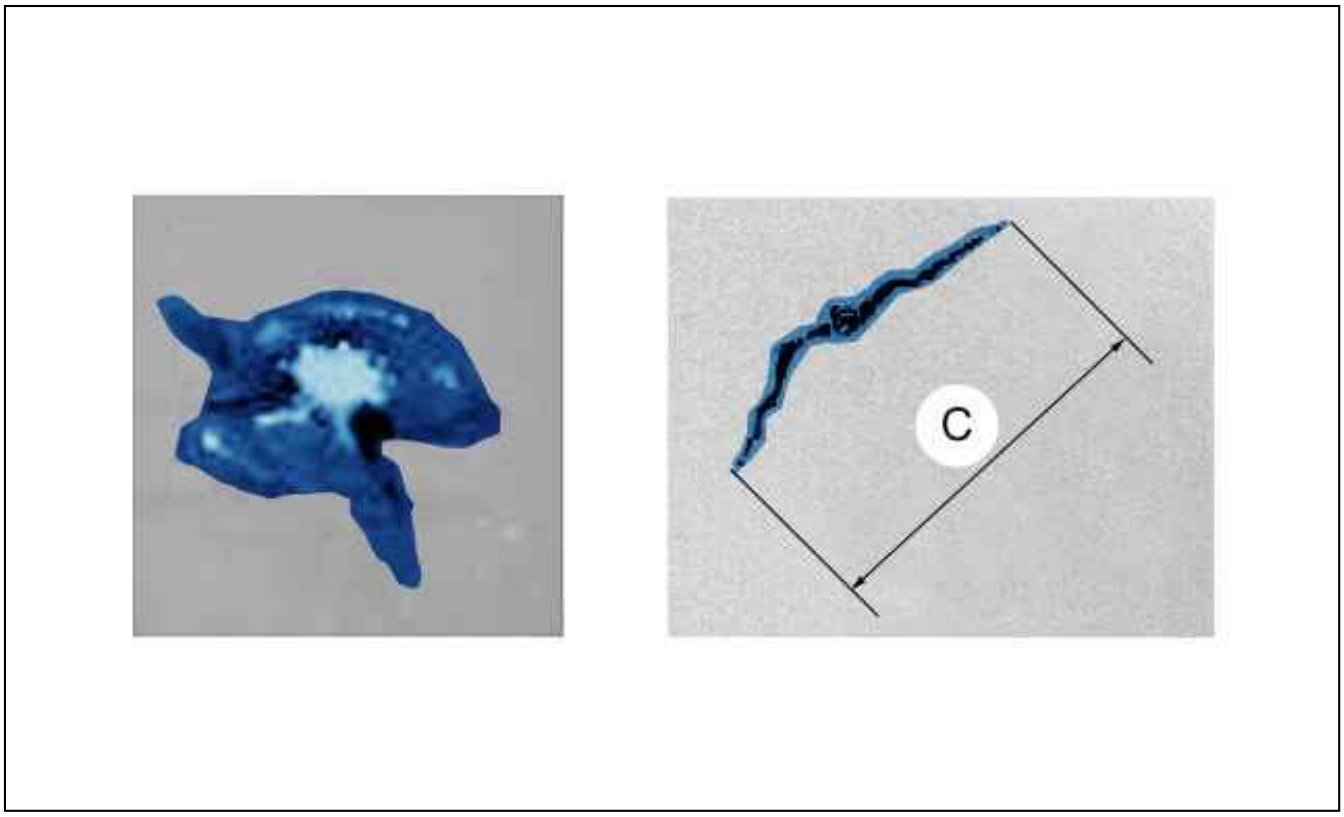

Figure : C5CM06YD

"C" = 50 mm (Max).
Formation of cracks or worse, spreading from the point of impact.

3.3. Star bubble or combination impact

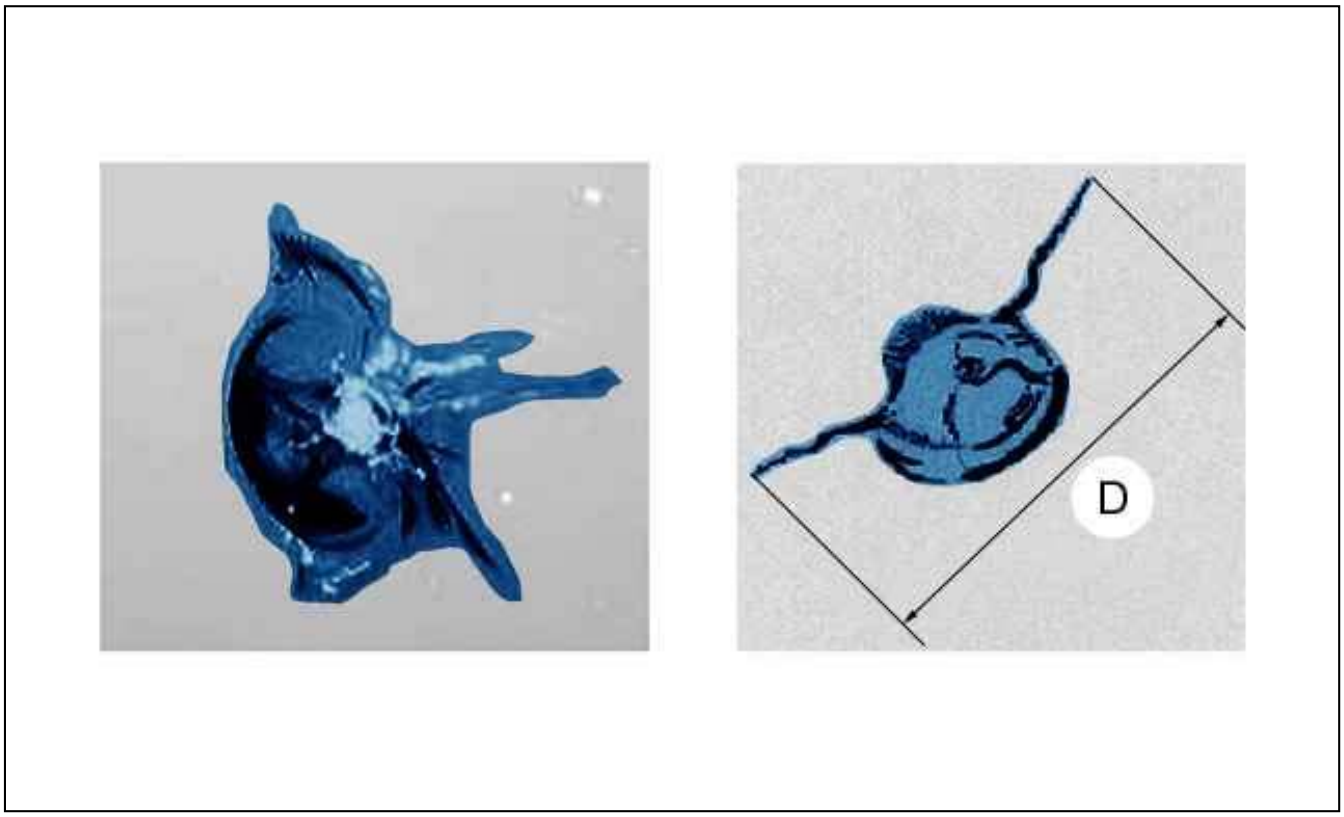

Figure : C5CM08PD

"D" = 50 mm (Max).
Formation of cracks or worse, spreading from the point of impact.

4. Precautions regarding use

N.B. : Numerous factors can affect the result of a repair.

The most important points to be complied with are the following :

- Check for the presence of moisture in the impact
- Check that the temperature of the window is between 10°C and 30°C
- Protect the resin from ultraviolet rays
- Control the amount of pressure during the injection of the impact

4.1. Humidity

N.B. : If moisture is present, dry out the impact using the heating lamp.

CAUTION : Heat the laminated window moderately using the heating lamp as any other excessively strong anc excessively violent heat source may enlarge the impact and crack the laminated window.

4.2. Temperature

The ideal temperature for repairing a laminated window is between 10°C and 30°C.

4.3. Ultraviolet rays

Repair away from ultraviolet rays.

4.4. Pressure

Follow the pressure level recommendations in the repair manual.

5. Repair

N.B. : Proceed in the same way for an athermic windscreen.

Place a protective cloth on the bonnet for setting down the tools.
Clean the laminated window around the impact using a dry, lint-free cloth.

N.B. : Do not spray any products onto the impact.

5.1. Fitting

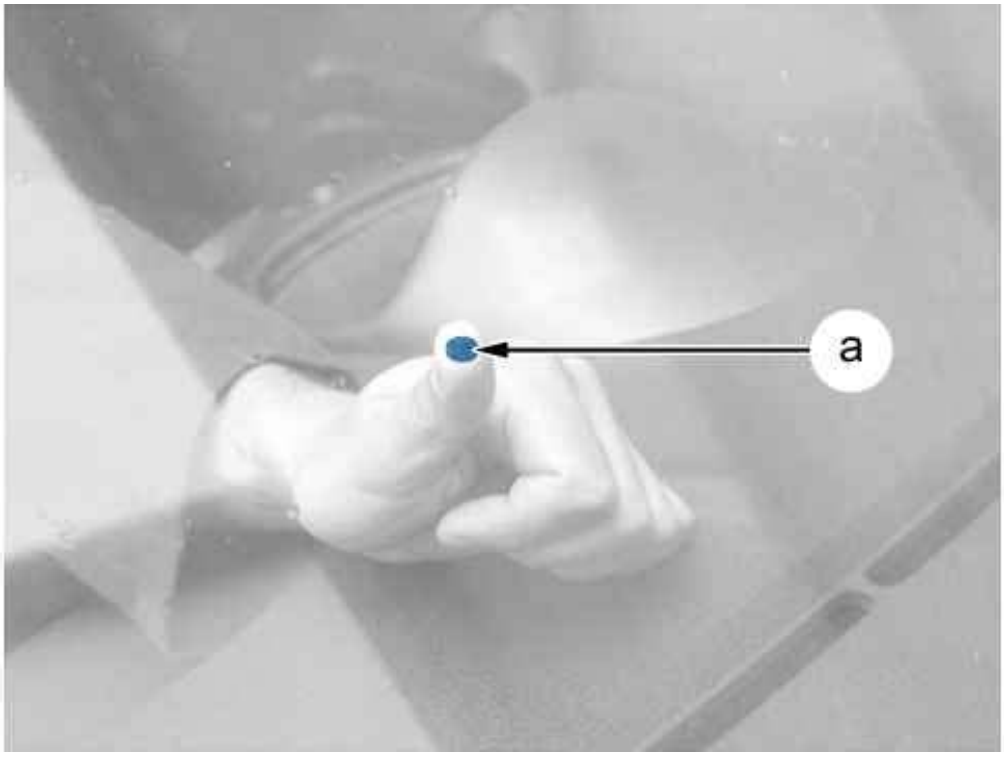

Figure : C5CM070D

Exert slight pressure on the impact at "a" using your thumb to ensure that it is free of the beginnings of any cracks.

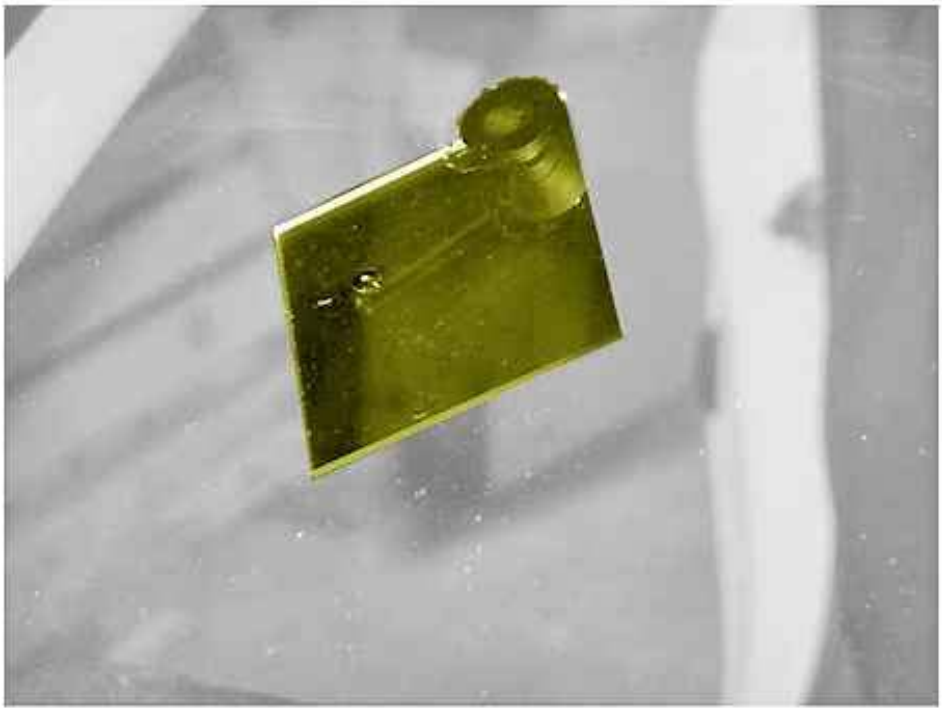

Figure : C5CM08QD

Apply adhesion product to the suction cup.
Put the rear view mirror in place inside the passenger compartment level with the impact.

N.B. : The mirror will serve as a guide throughout the repair.



Figure : C5CM08YD

Drill out the point of impact until contact is made with the sheet of polyvinyl butyral ; Using a drill and bit.

5.2. Injection process

2 Processes for injecting the resin :

- 1 Manual process
- 1 Process using a pressure/vacuum pump

N.B. : Refer to the repair manual : Before removing the injection equipment, check that there are no more particles o air in the impact.

5.3. Drying and finishing

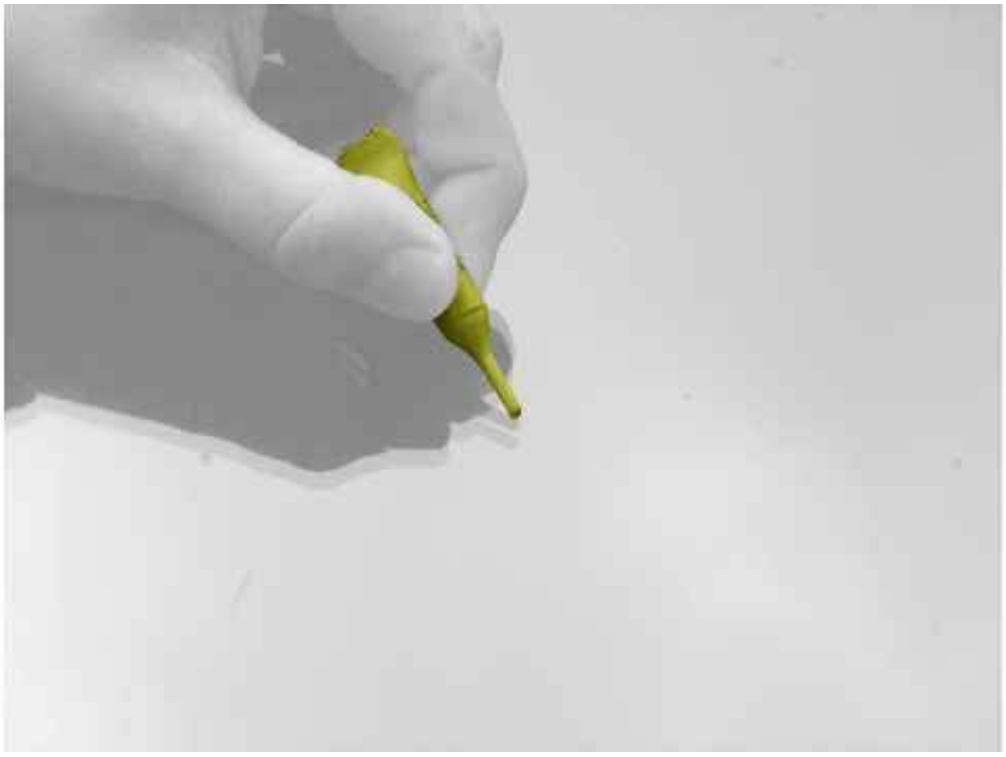

Figure : C5CM08ZD

Apply a drop of finishing resin.

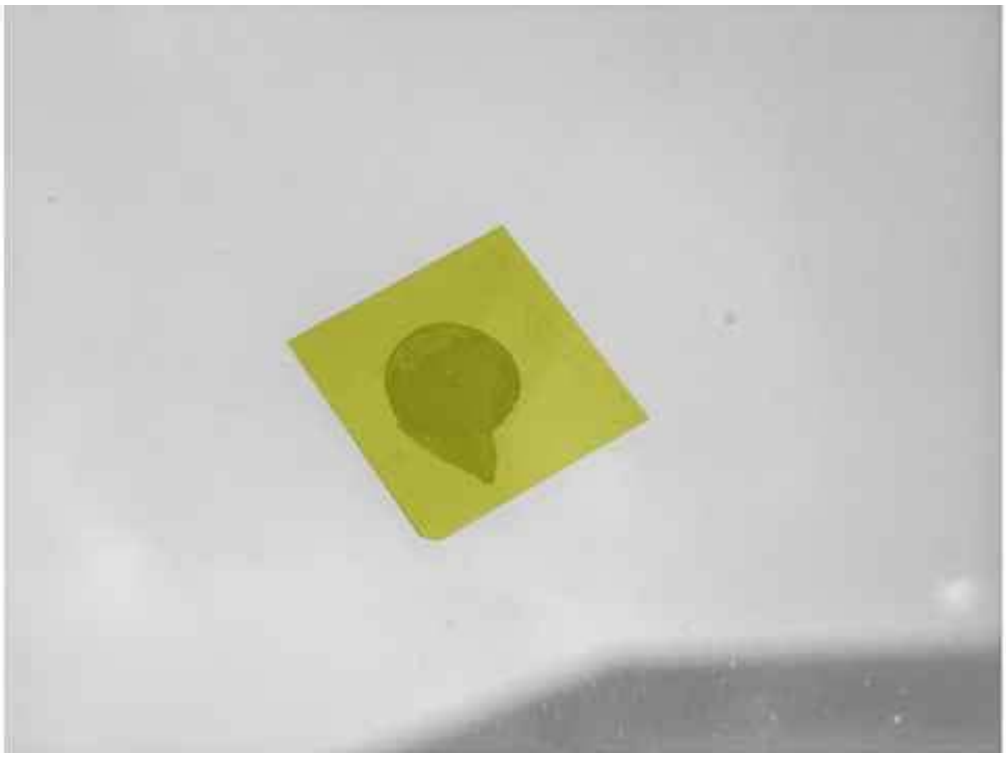

Figure : C5CM090D

Put a small plastic sheet on the finishing resin.
Allow the small plastic sheet to rest naturally so that the finishing resin covers the whole impact.

N.B. : Do not touch the finishing resin with your fingers.

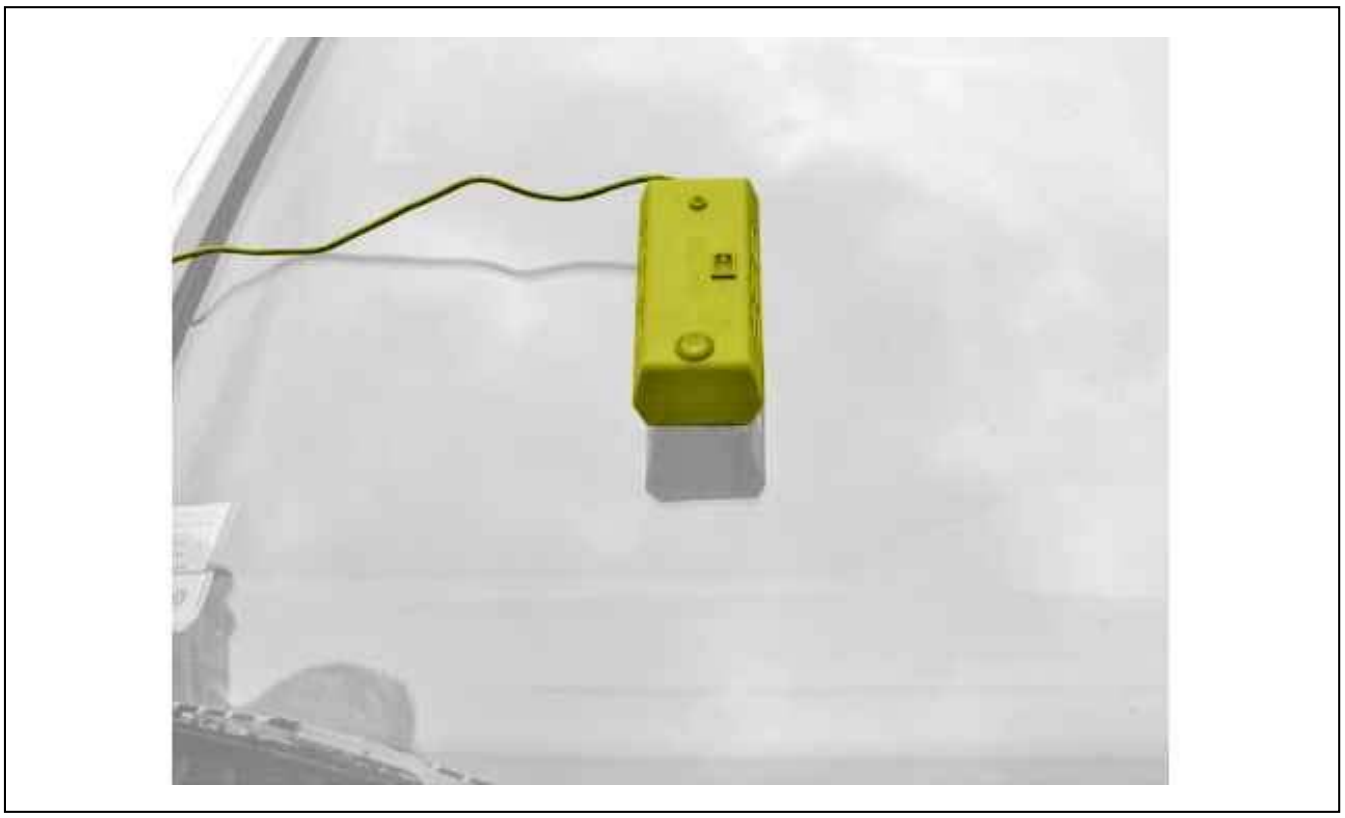

Figure : C5CM091D

Put the ultraviolet lamp in place on the small plastic sheet on the exterior side of the laminated window.
Leave to dry for 15 minutes (minimum).
Remove :

- The ultraviolet lamp
- The plastic sheet

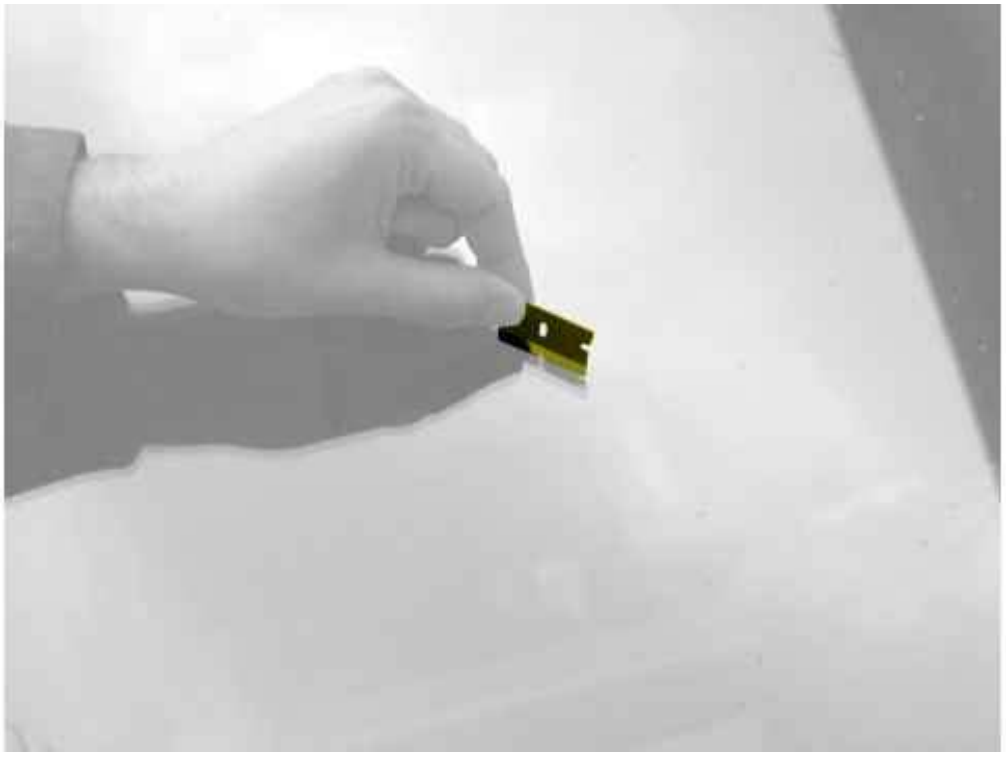

Figure : C5CM092D

Scrape off the surplus finishing resin using the scraper.

CAUTION : Scrape off the surplus perpendicular to the laminated window and not parallel (risk of removing the entire layer of polymerised resin).



Figure : C5CM093D

Apply the special glass finishing polish using a lint-free cloth.
Clean the laminated window.
Check that the surface of the glass is even as elsewhere on the laminated window.

REPAIR : SCRATCH ON GLASS

ESSENTIAL : Observe the safety and cleanliness recommendations .

1. Tooling

Glass scratch repair kit.

N.B. : Refer to the tools catalogue (Bodywork Family).

2. Windscreen repair area

CAUTION : Read the repair manual in full.

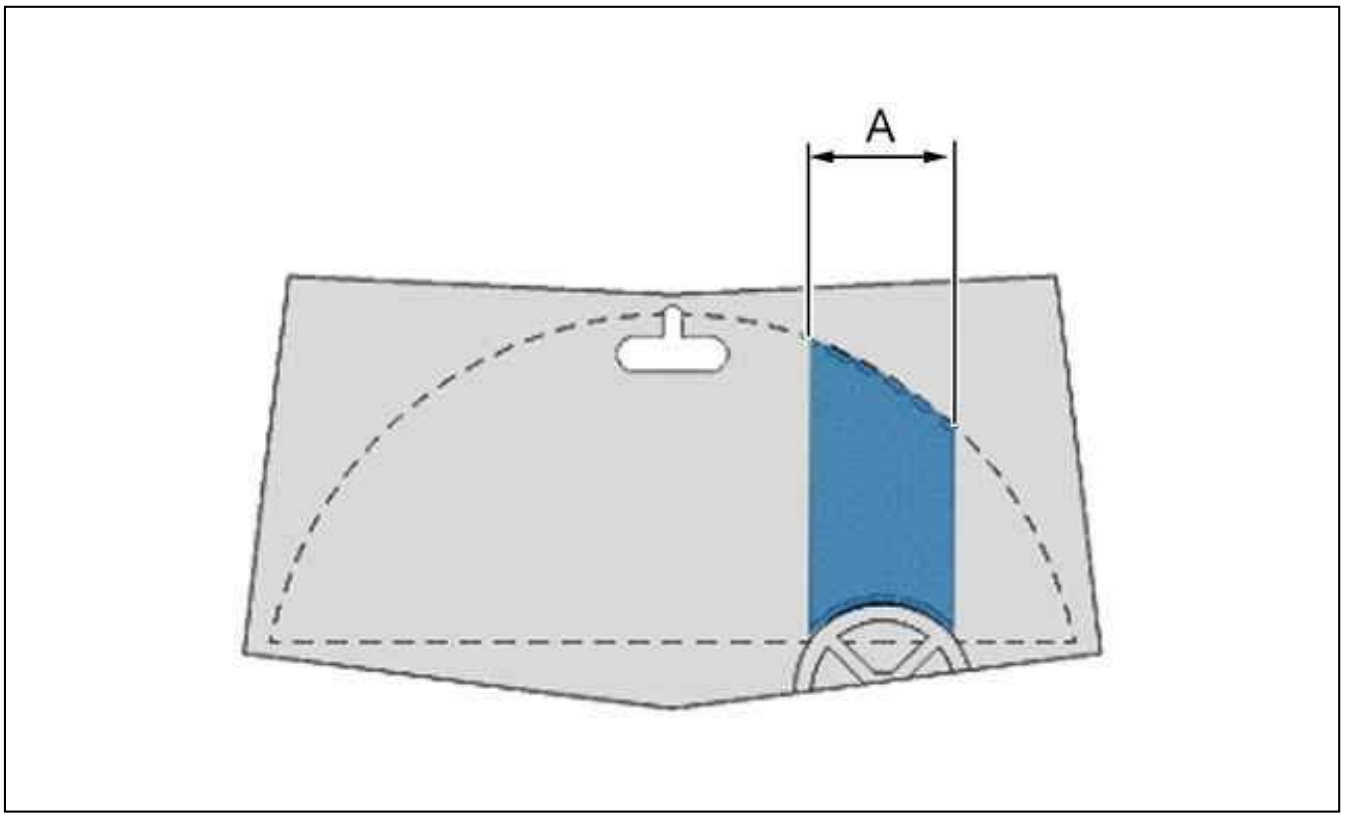

Figure : C5CM095D

"A" Zone of driver’s field of vision in which any repair is forbidden (220 mm).

N.B. : Any repair in the driver’s field of vision may constitute a hindrance of vision.

3. Precautions regarding use

N.B. : Always store the discs in individual plastic bags to avoid contamination. Excessive heat may break the glass.

ESSENTIAL : Keep the temperature of the glass under control to prevent it from breaking.

Mixing 5 litres of distilled water with the dose provided permits several repairs of optimum quality.
If the polisher bounces on the glass during the operation, increase the level of water and the angle of the polisher slightly.

ESSENTIAL : Use the polisher with extreme care (Splashes of water).

4. Scratch

CAUTION : A scratch which can be detected with a fingernail is considered deep and therefore irreparable.

Repairable scratches :

- Slight scratches
- Very slight scratches

ESSENTIAL : Follow the repair process using the discs is descending order, blue, orange and white.

5. Preparation



Figure : C5CM096D

Examine the scratch (at "a") to be repaired and determine its repair.

N.B. : To see the surface to be worked on more easily, mark the interior of the window using a black marker.

Clean the glass.

Protect the vehicle against slashes of water.

ESSENTIAL : Use distilled water.

Fill the water reservoir with the full dose provided for 5 litres of water.
Pump the coolant reservoir several times to pressurise it.
The pipe must be connected to the polisher.
Check that the red water flow valve is in the closed position.



Figure : C5CM097D

5.1. Polishing

CAUTION : Too little water may result in an increase in the temperature of the polishing disc and shorten its service life; too much water slows down the polishing process.

Turn the valve anticlockwise until a few drops of water begin to flow from the centre of the polishing head.

ESSENTIAL : Follow the repair process using the discs is descending order, blue, orange and white.

Hold the polisher flat and keep it above the surface to be polished.
Eliminate the scratch (at "a") ; Using the polisher.
Polish the area (at "b").
Clean the glass ; Using a scraper.
Visually check the progress of the repair.
After a few minutes of polishing, the scratch begins to disappear.
Continue polishing until the scratch has disappeared completely.

5.2. Final polishing

There are 2 options for the final polishing stage.

1 option :

- Use the white disc ; Using the polisher
- Increase the flow and quantity of water
- Hold the polisher flat and keep it above the surface to be repaired
- Polish the area (at "b")
- If the polisher begins to bounce, increase the flow of water
- Continue the final polish, until a satisfactory result is achieved

2 option :

- Use the foam disc ; Using the polisher
- Apply the polishing fluid or powder to the foam disc
- Add a few drops of water to the foam
- Hold the polisher flat and keep it above the surface to be repaired
- Polish the area (at "b")
- Continue the final polish, until a satisfactory result is achieved
- If cloudy marks remain after polishing, Use option 1 to achieve a satisfactory result

REMOVING - REFITTING : SPARE WHEEL WINCH

ESSENTIAL : Observe the safety and cleanliness recommendations .

1. Removing

CAUTION : If removing the spare wheel winch described below, replace it with the new spare wheel winch describec in the chapter on refitting.

Put the vehicle on a ramp.
Open the rear right door.
Remove the spare wheel (See : The vehicle's documentation).

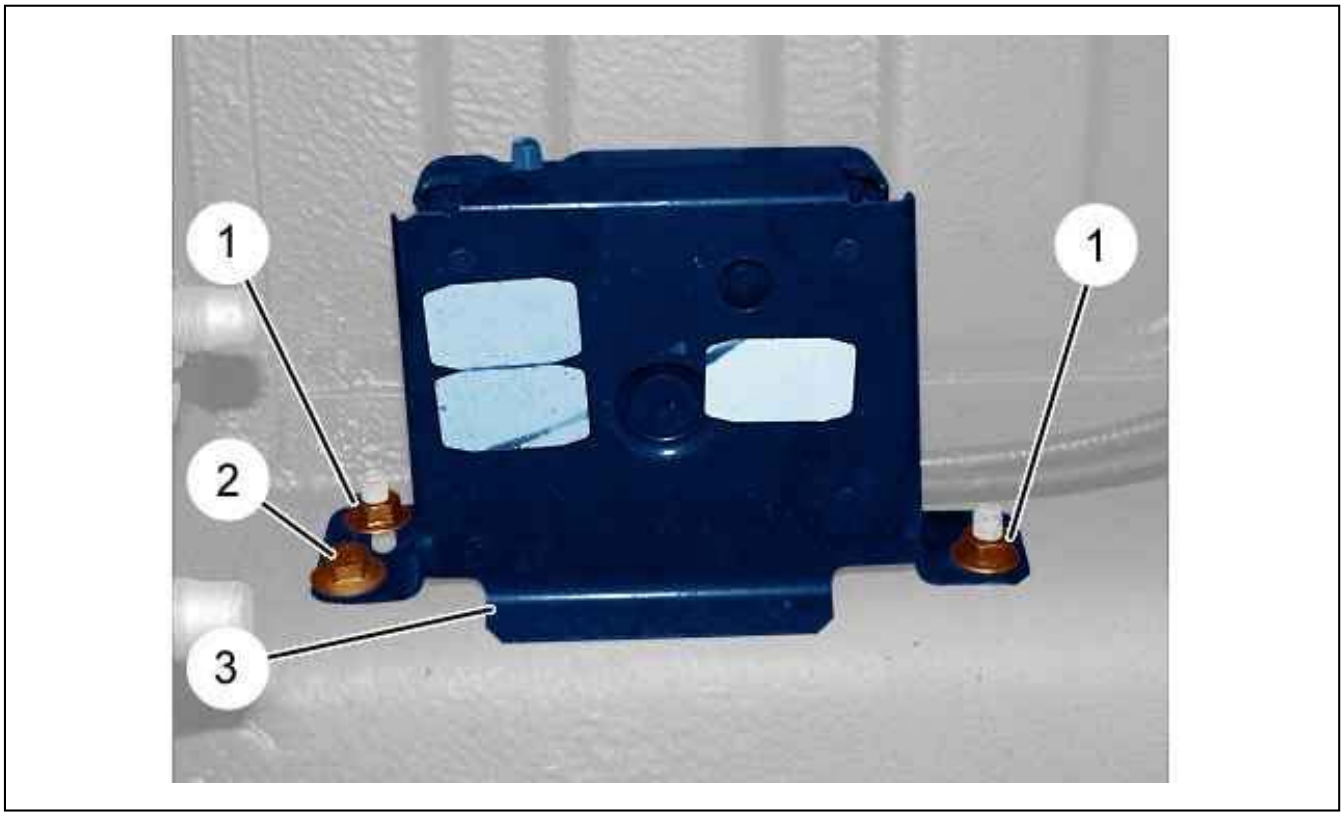

Figure : C5DGY6LD

Remove :

- The nuts (1)
- The securing bolt (2)
- The spare wheel (3) winch mechanism

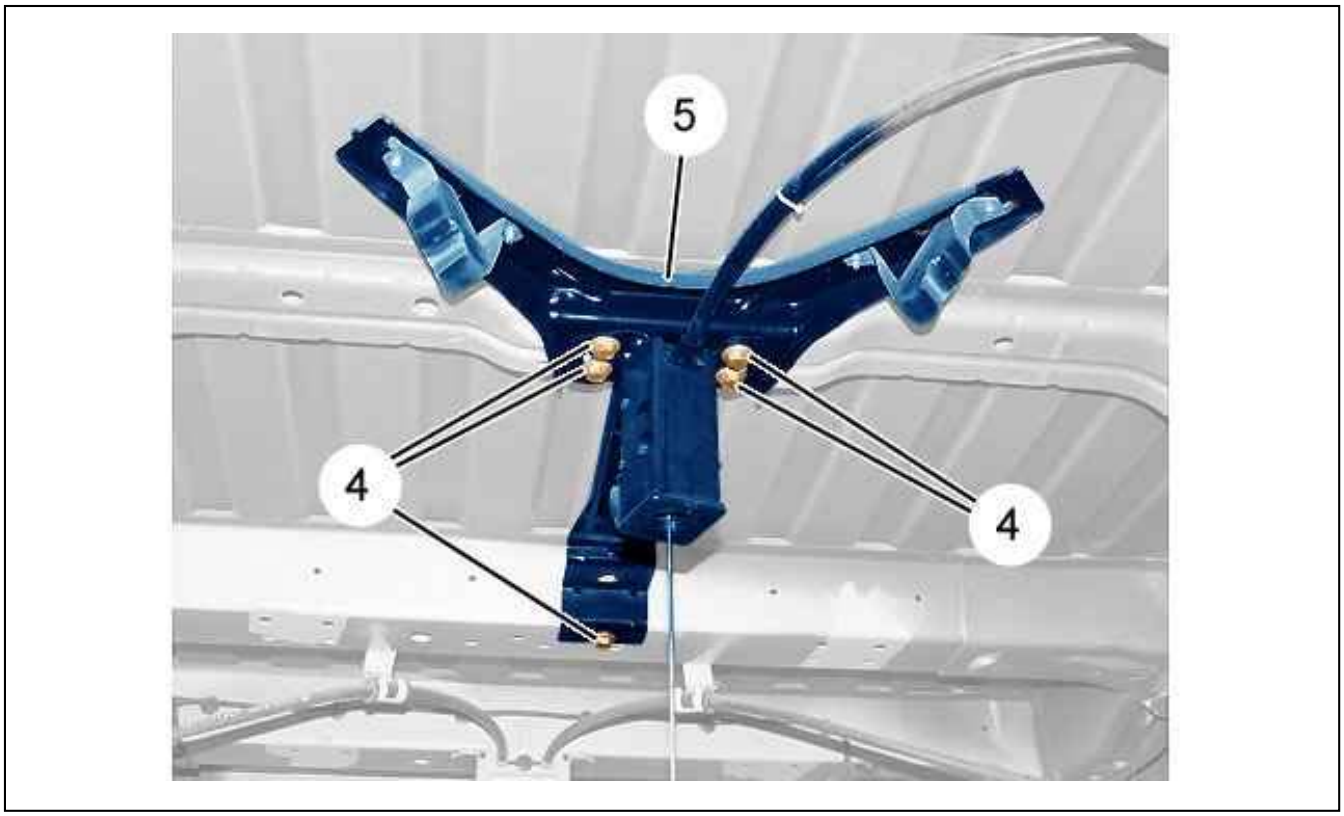

Figure : C5DGY6OD

Remove :

- The (4) securing bolts (4) (To be kept)
- The spare wheel winch (5)

2. Presentation of the new spare wheel winch

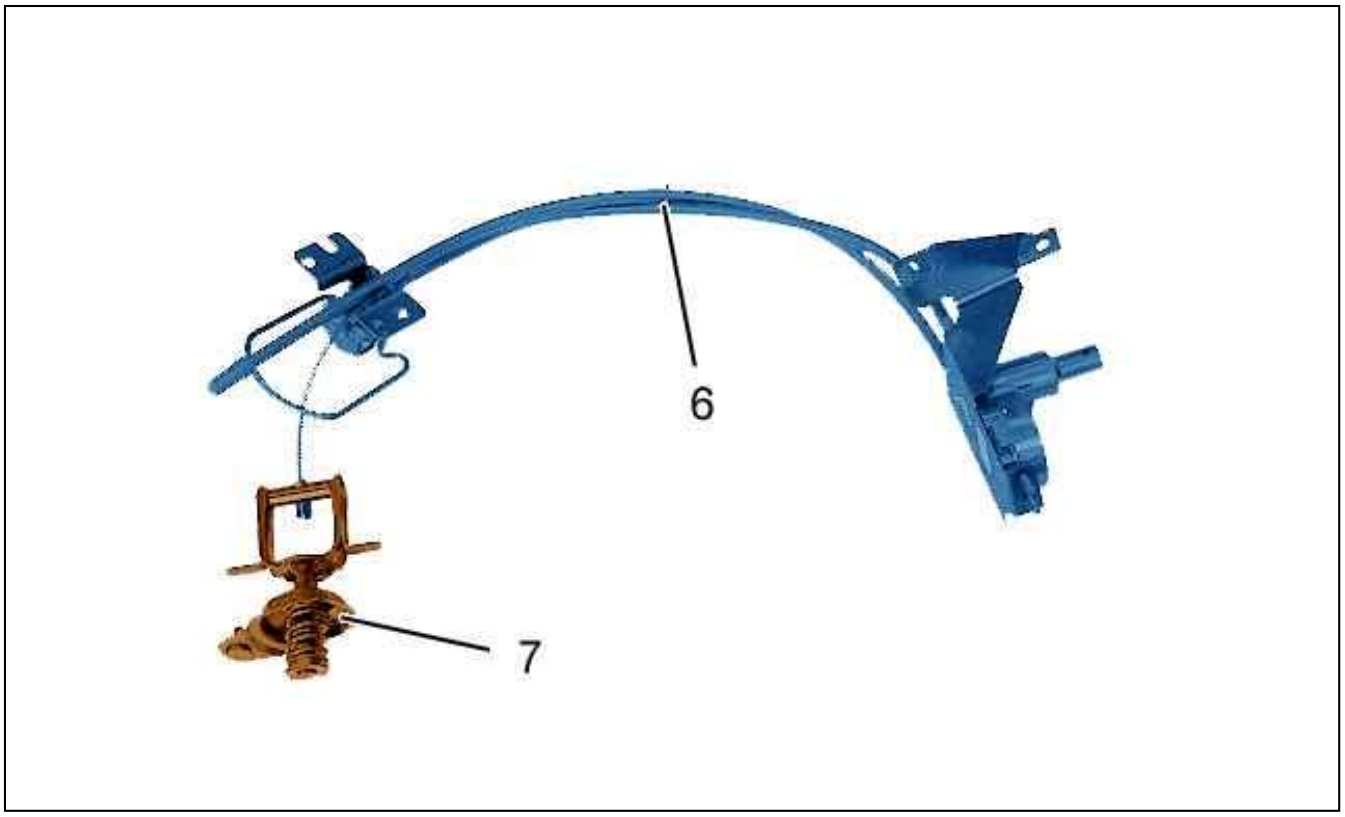

Figure : C5DGYA5D

Spare wheel operating mechanism (6).
Spare wheel anchoring bracket (7).

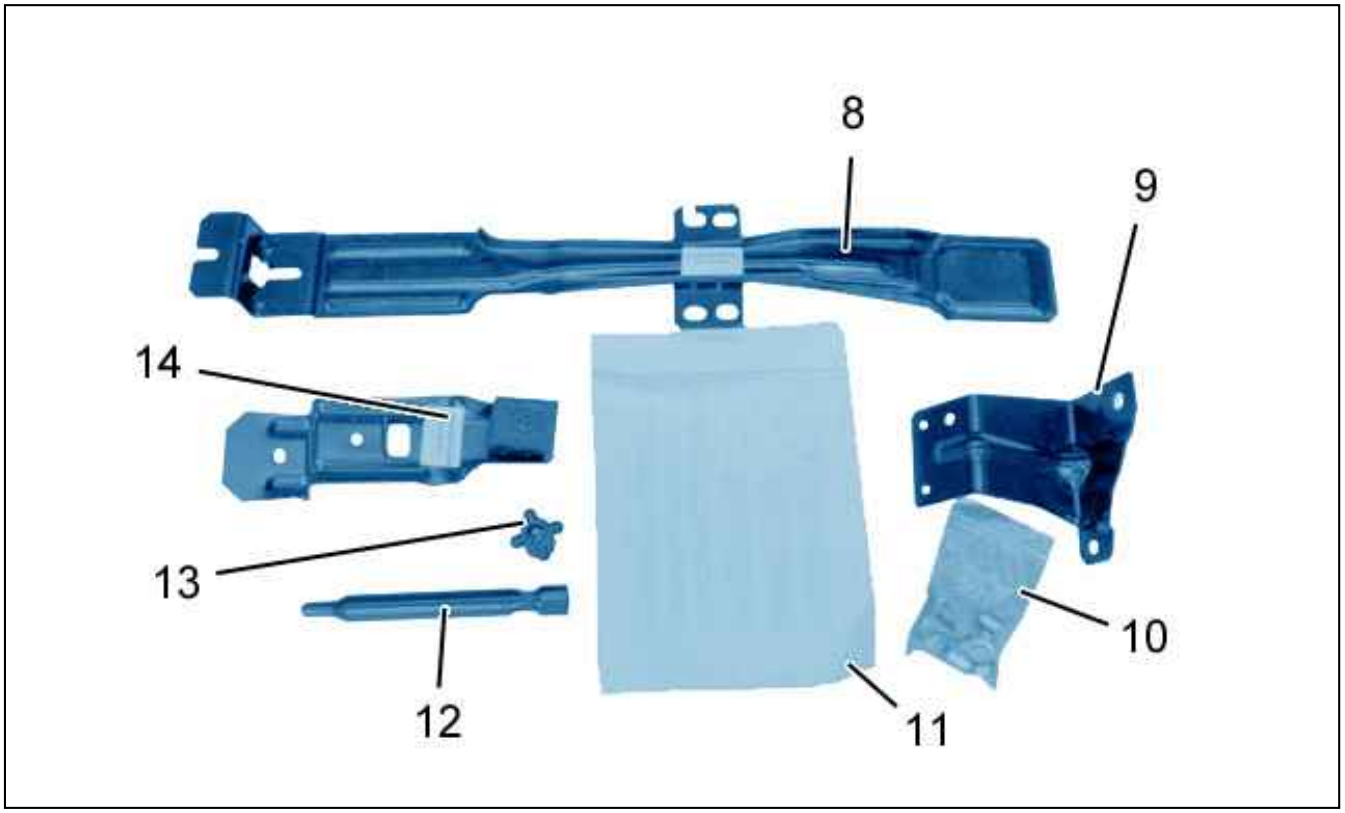

Figure : C5DGYA8D

Spare wheel support caliper (8) (For chassis-cab version).

Caliper securing the wheel raising and supporting device (9) (Lifting mechanism side).
Bag containing 4 bolts, 4 threaded rivets, 2 nuts (10).
Explanatory note for the customer (11) (For insertion in the maintenance handbook).
Wheel raising device operating extension (12).
Nut securing the spare wheel to the wheel raising mechanism (13).
Spare wheel support caliper (14) (For van version).

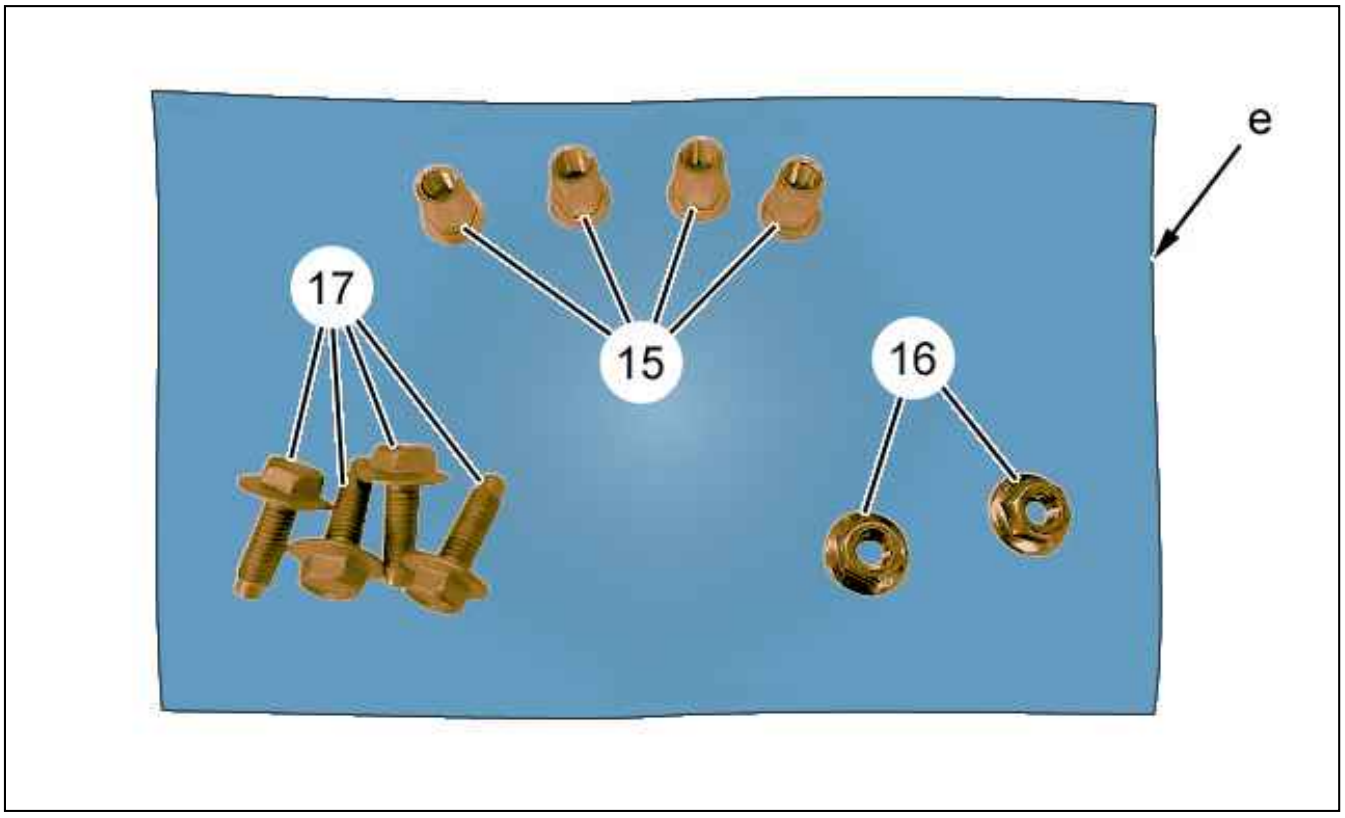

Figure : C5DGYABD

Detail of the contents of the bag ("e") :

- Threaded rivets (15)
- nuts (16)
- bolts (17)

3. Refitting

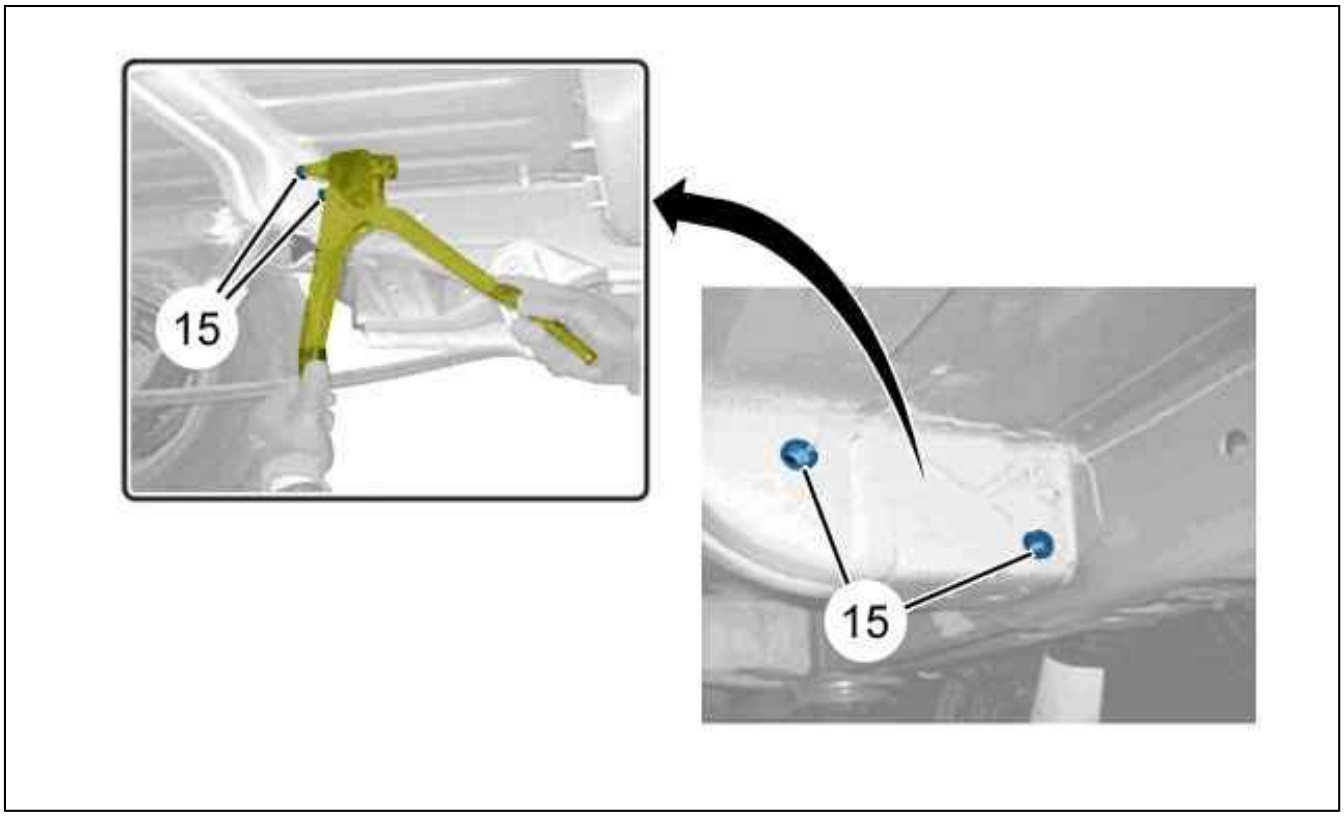

Figure : C5DGYAED

Position the threaded rivets (15) in the 4 hexagonal housings located on the crossmember ; crimp them using appropriate rivet pliers (See tools catalogue).

3.1. Cab-chassis

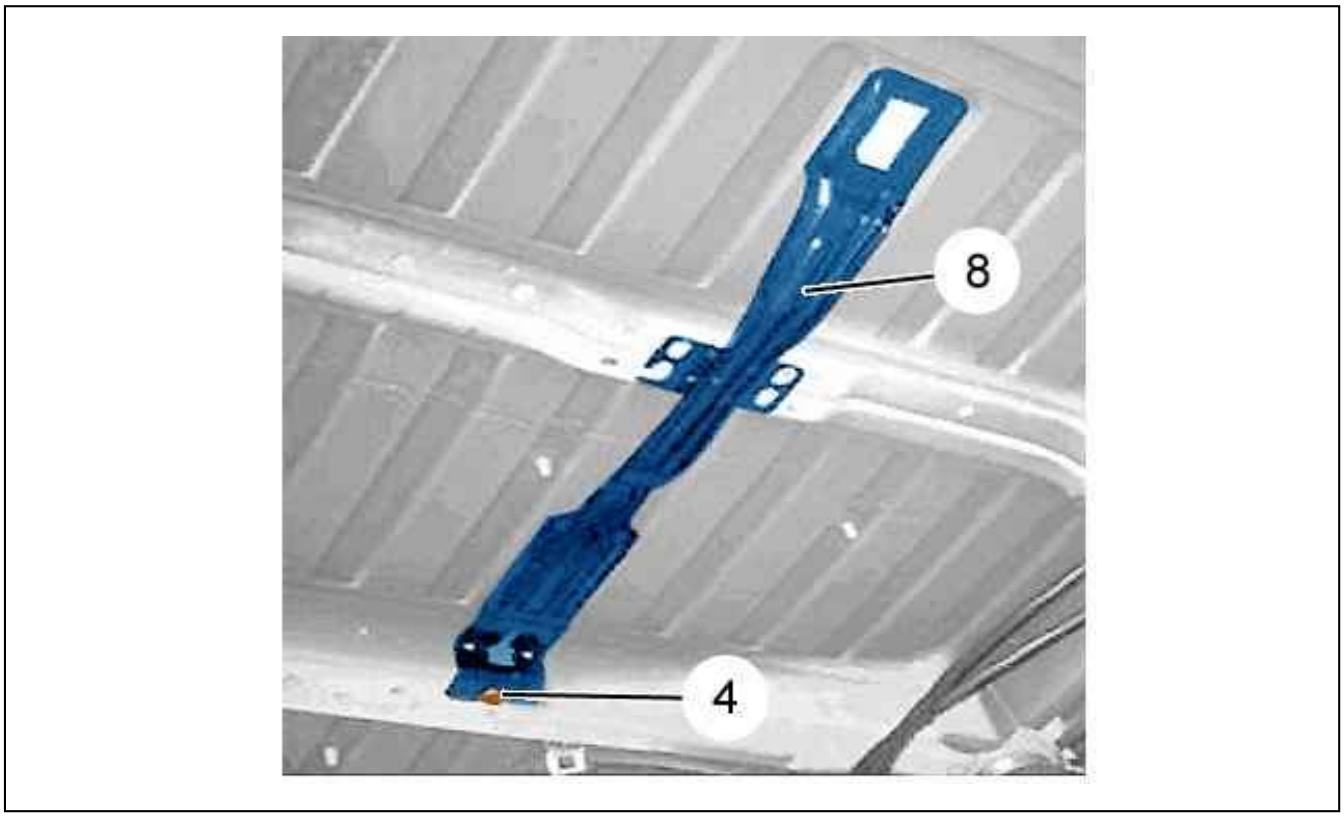

Figure : C5DGYAFD

Position the spare wheel support caliper (8), centring it in relation to the ribbing; secure it with one of the bolts (4) from the old device.

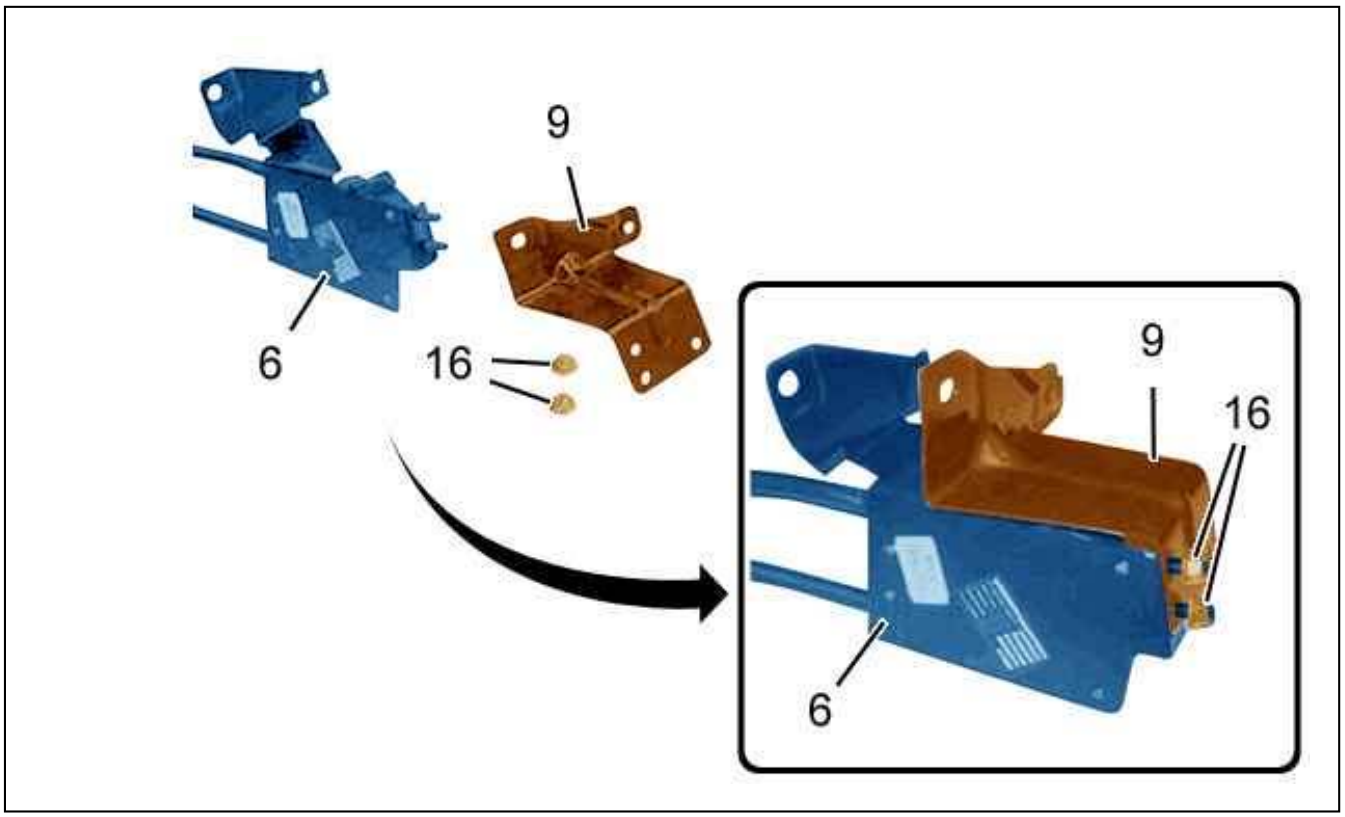

Figure : C5DGYAID

Using the nuts (16), assemble the fixing caliper (9) to the control mechanism (6).

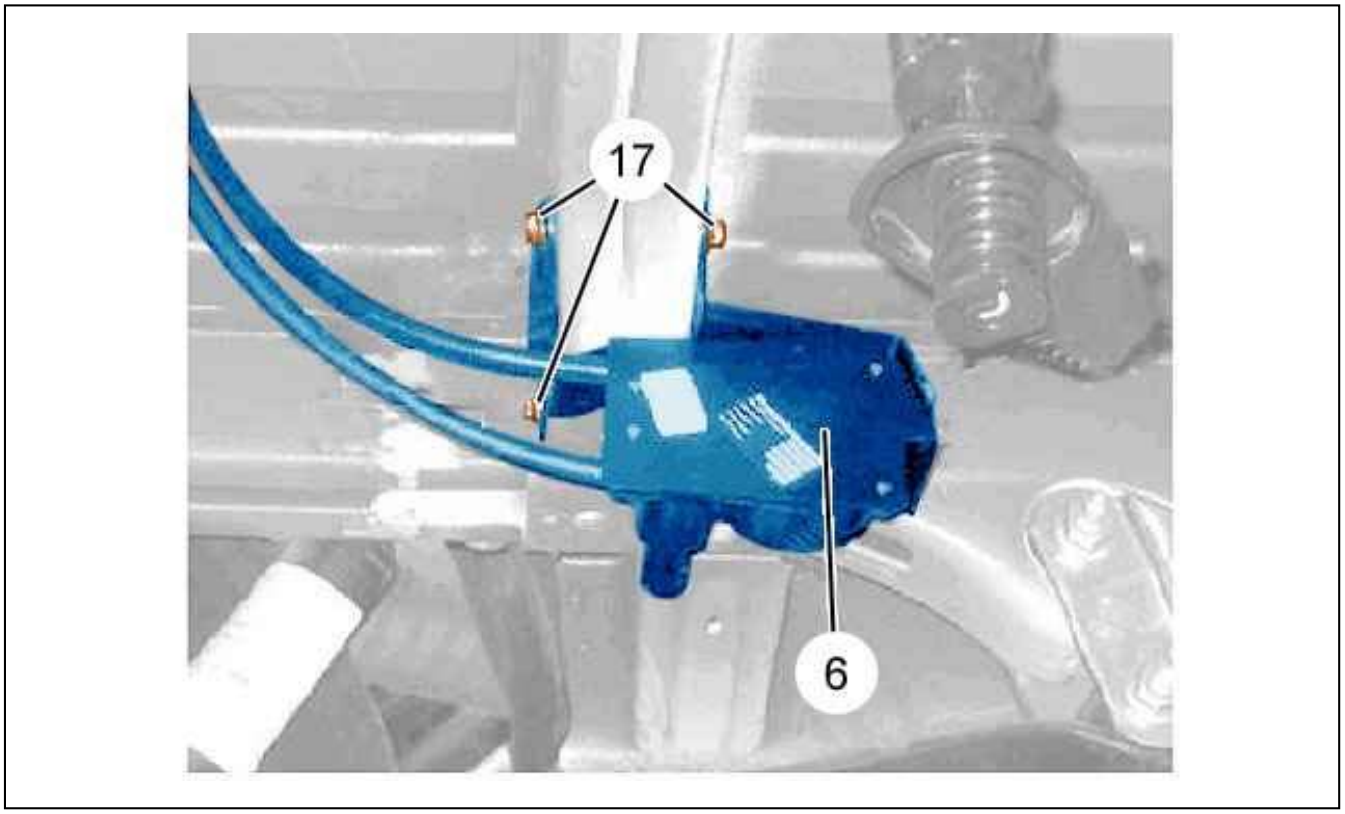

Figure : C5DGYALD

On the RH side of the vehicle, position the control mechanism assembly (6) ; secure it using the bolts (17).

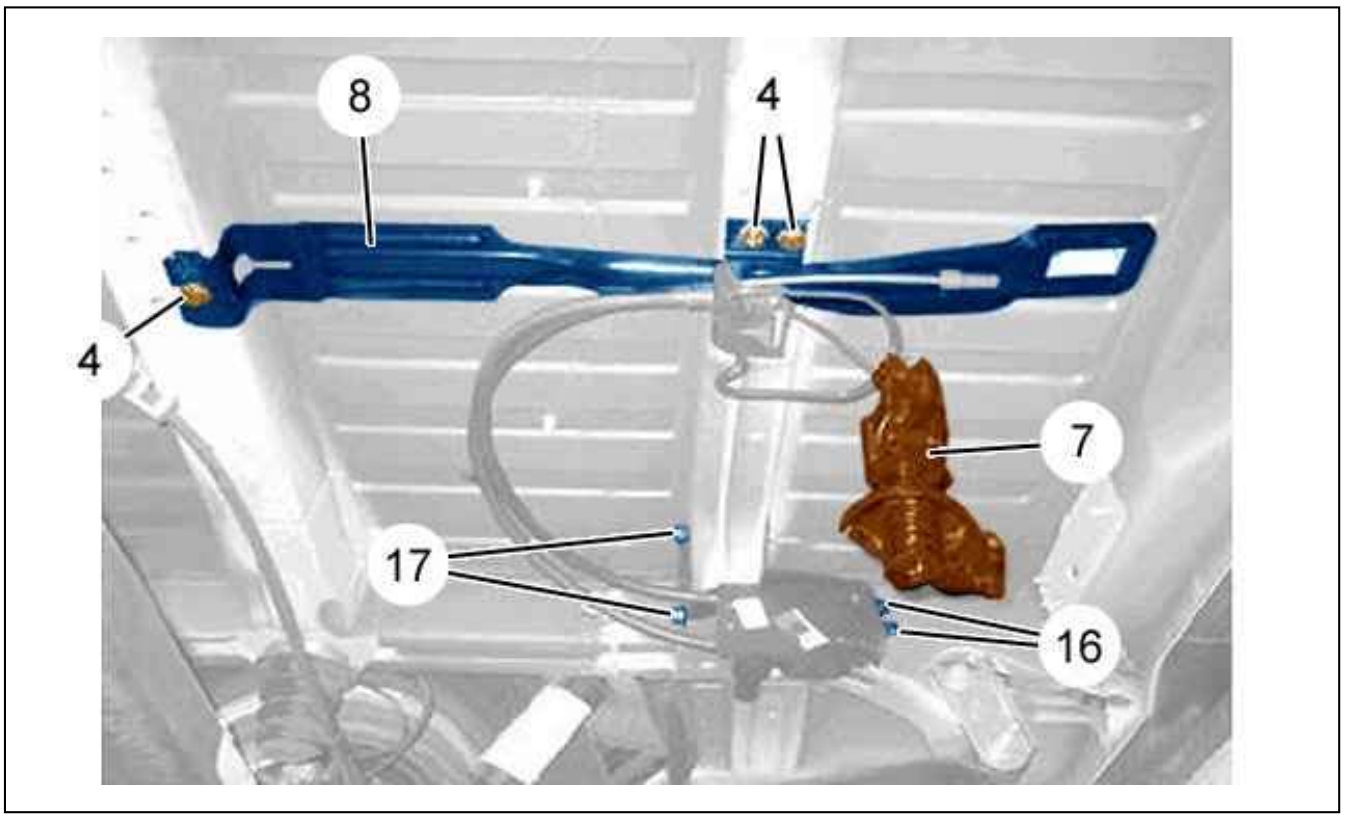

Figure : C5DGYAOD

Position the free end of the device (7) on the crossmember, over the support caliper (8) ; secure it using the bolts (4) from the old device.
Tighten the bolts (4) and (17) to 2,5 m.daN.
Tighten the nuts (16) to 2,5 daN.m.

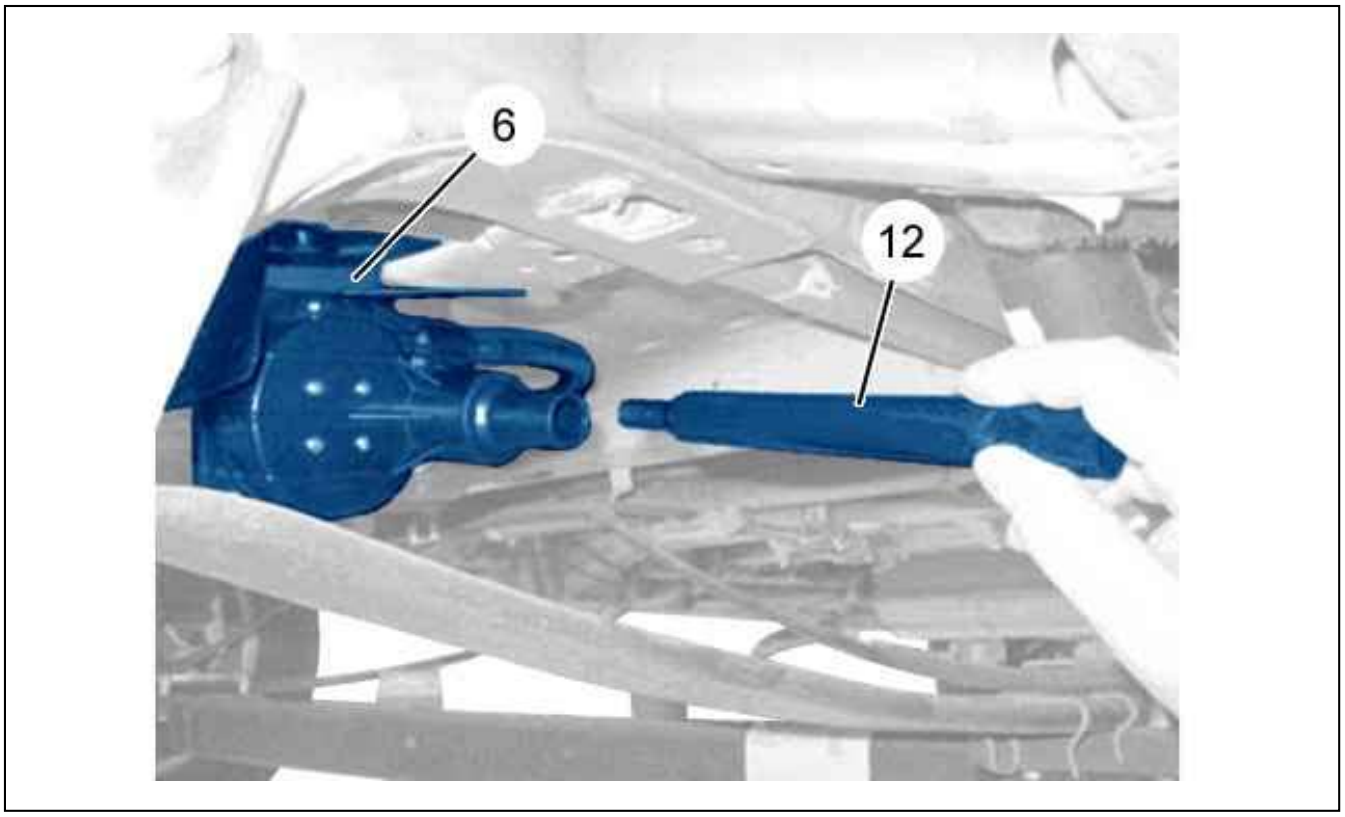

Figure : C5DGYARD

Insert the extension (12) into the housing provided on the control mechanism (6), checking that the assembly works properly by use of the wheel bolt removing tool provided as standard.

3.2. van

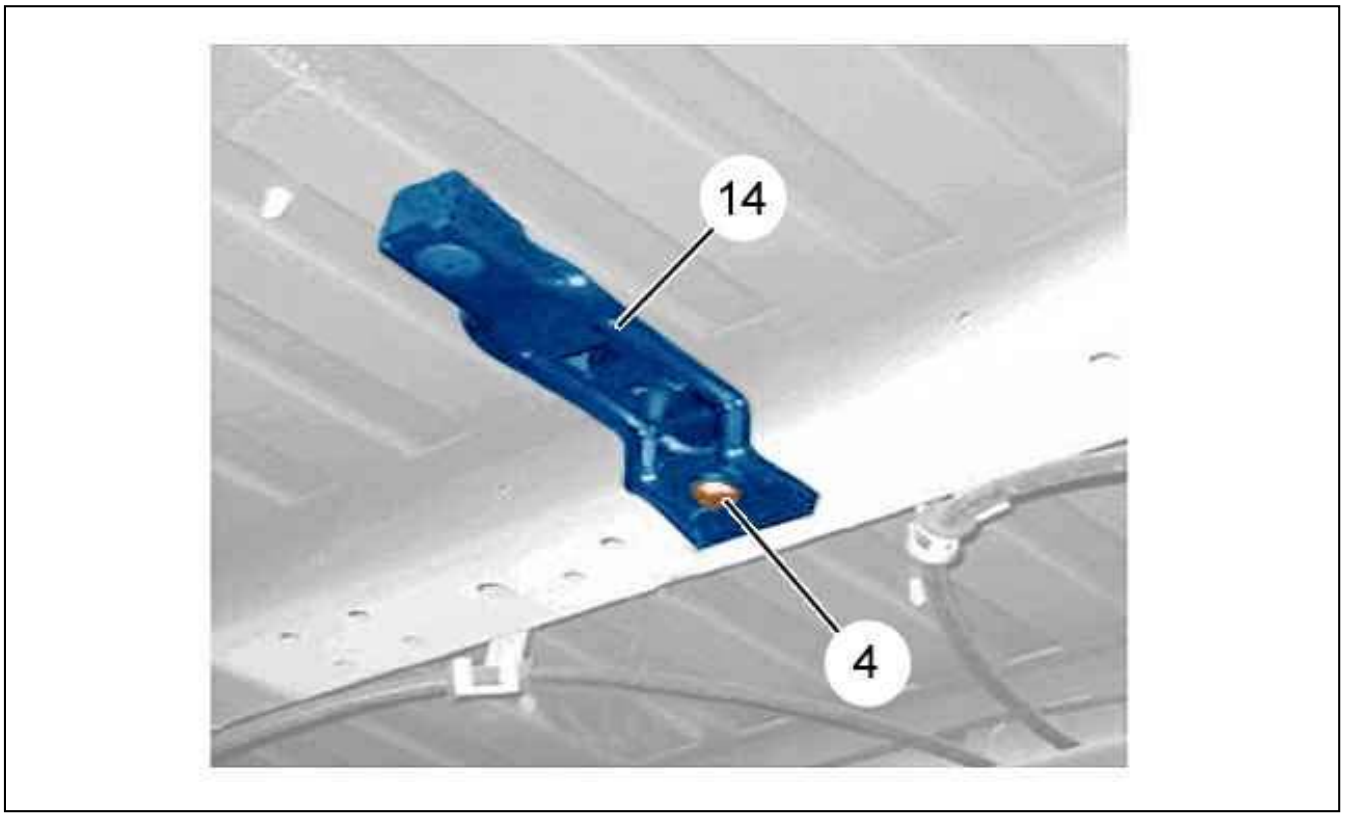

Figure : C5DGYAUD

Position the spare wheel support caliper (14), centring it in relation to the ribbing; secure it with one of the bolts (4) from the old device.

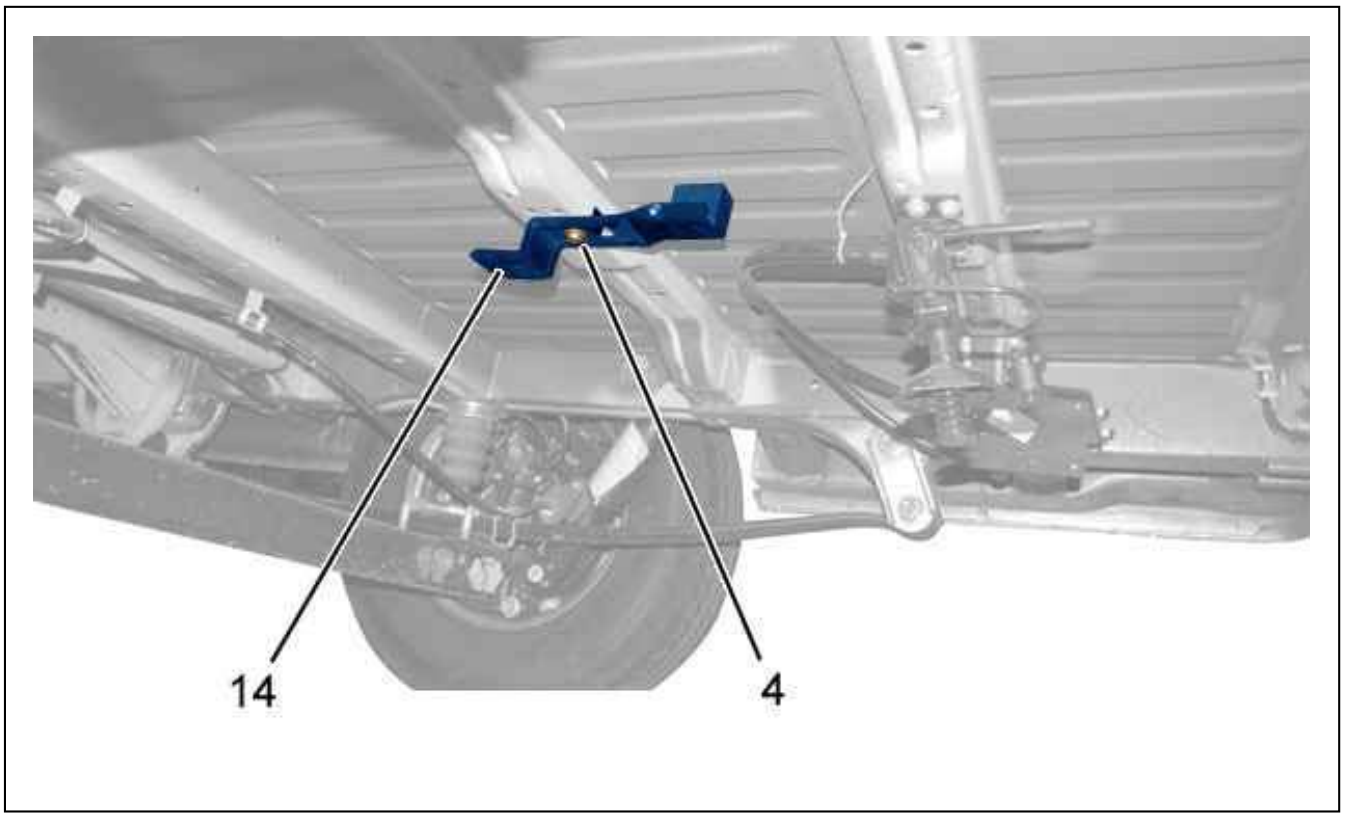

Figure : A1BM19OD

CAUTION : For vehicles of length L4 special fitting of the spare wheel support caliper (14).

Position the spare wheel support caliper (14), centring it in relation to the ribbing; secure it with one of the bolts (4) from the old device.

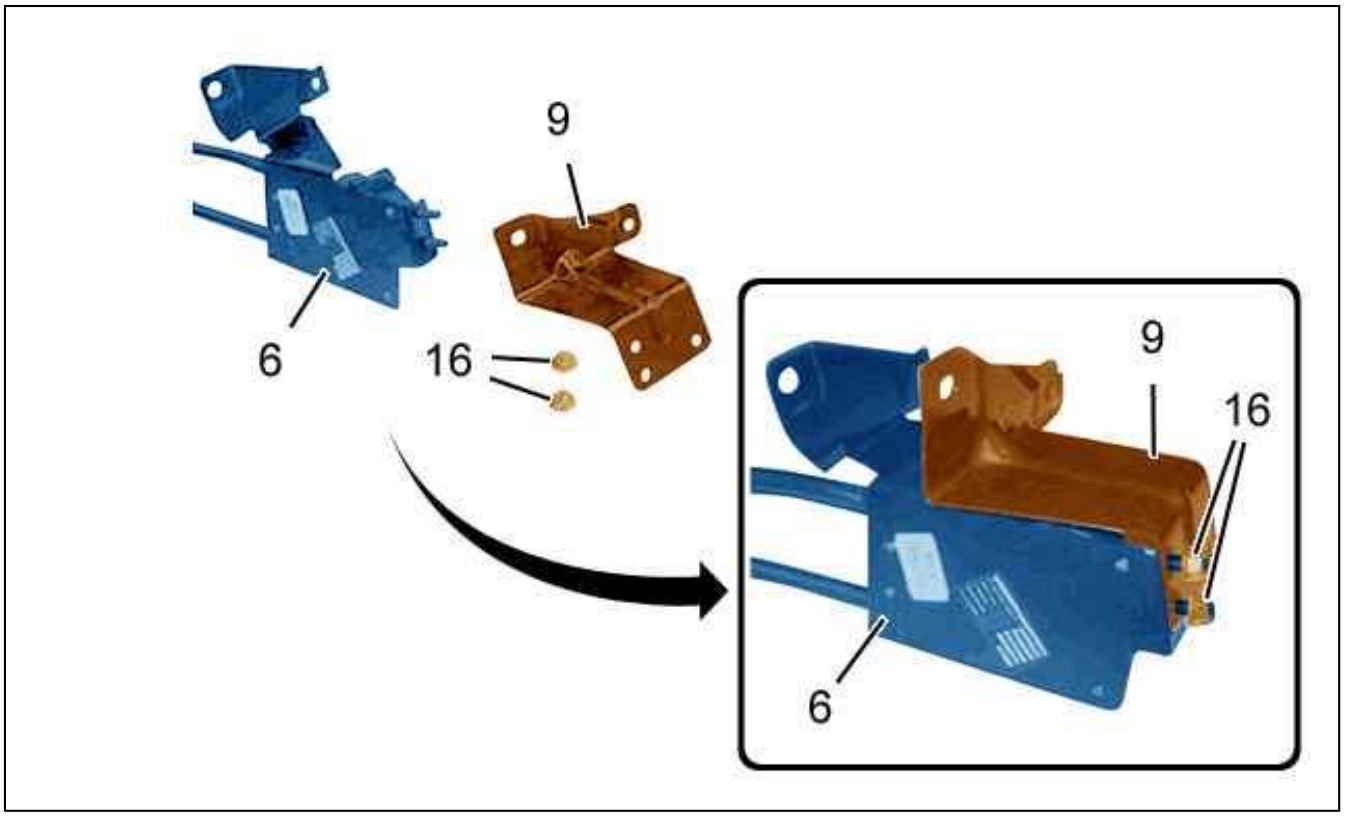

Figure : C5DGYAID

Using the nuts (16), assemble the fixing caliper (9) to the control mechanism (6).

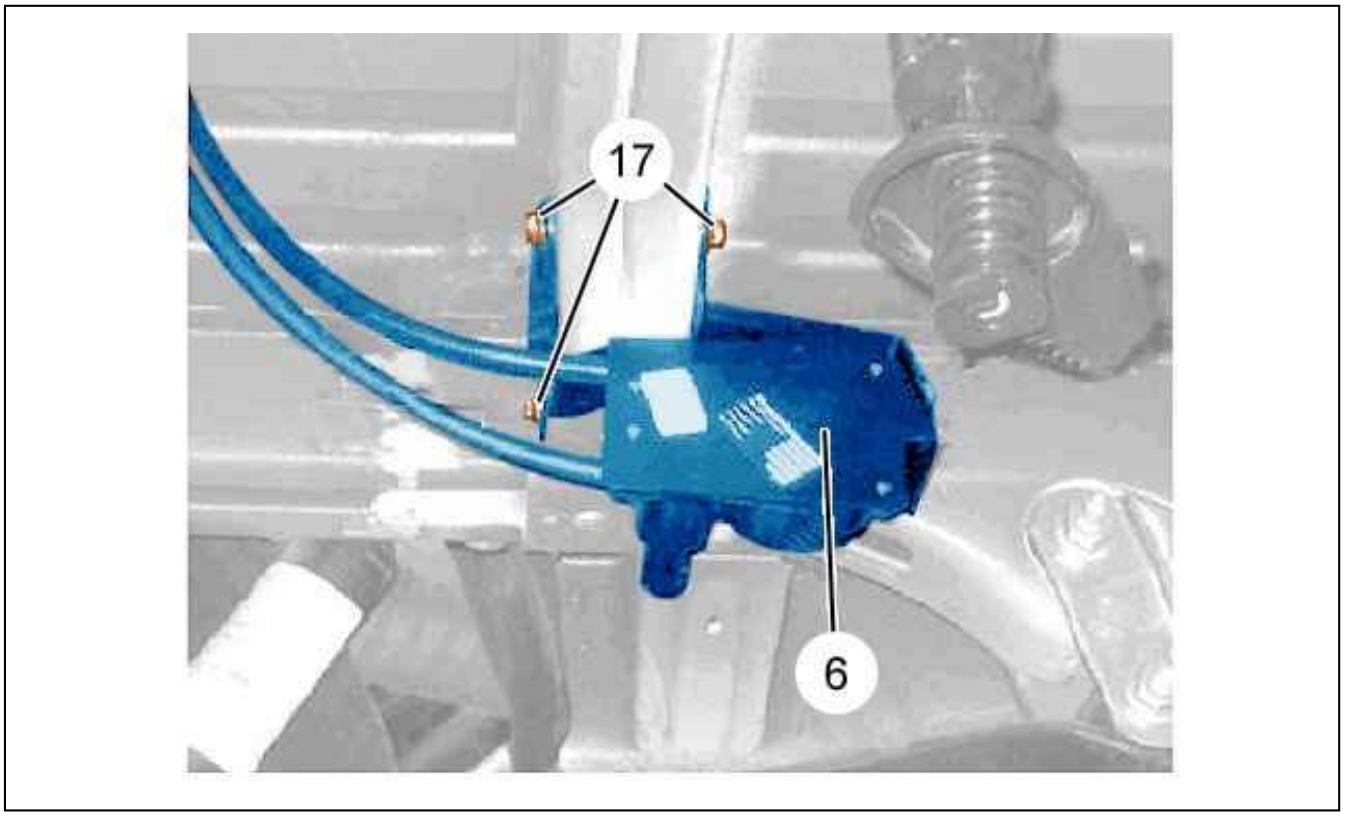

Figure : C5DGYALD

On the RH side of the vehicle, position the control mechanism assembly (6) ; secure it using the bolts (17).

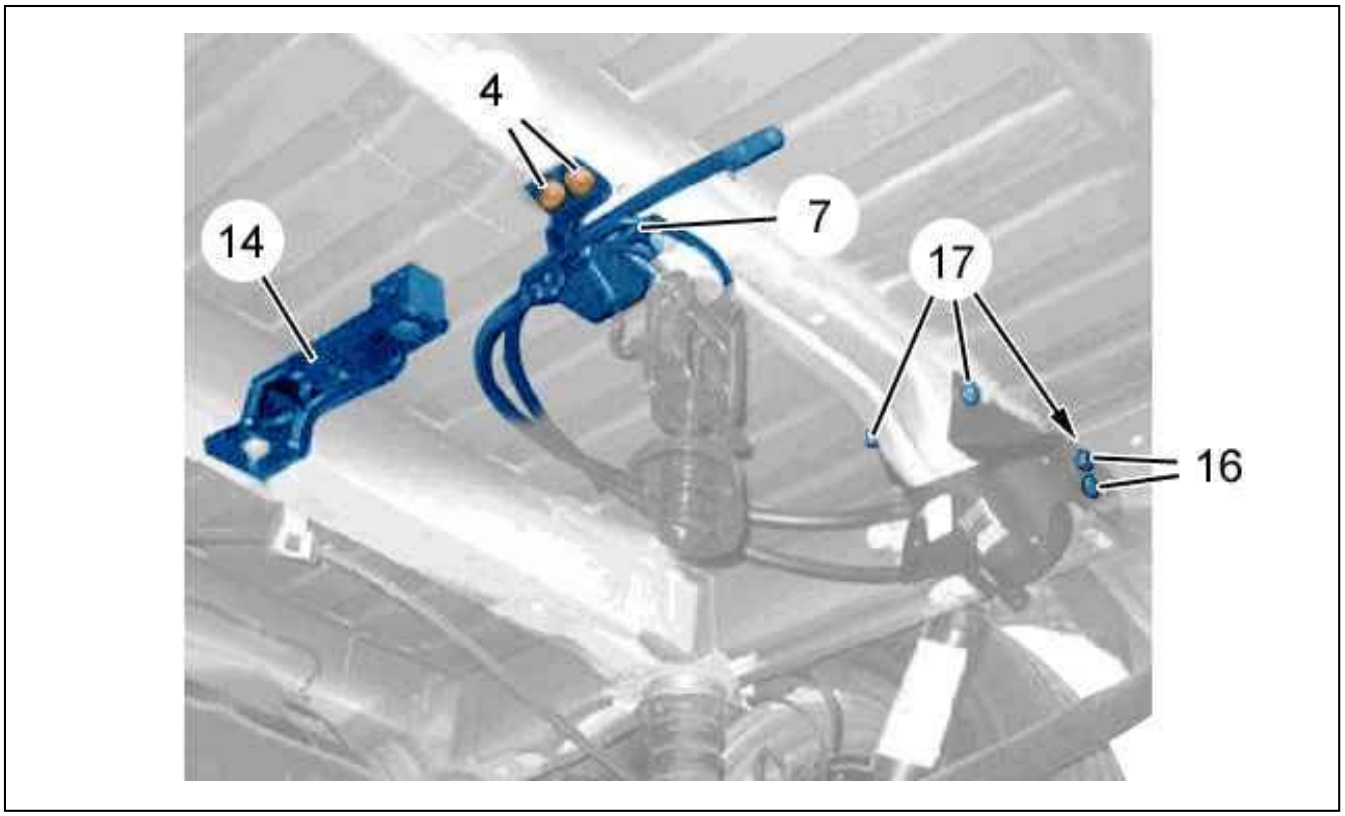

Figure : C5DGYB1D

Position the free end of the device (7) on the crossmember; secure it using the bolts (4) from the old device.
Tighten the bolts (4) and (17) to 2,5 m.daN.
Tighten the nuts (16) to 2,5 daN.m.

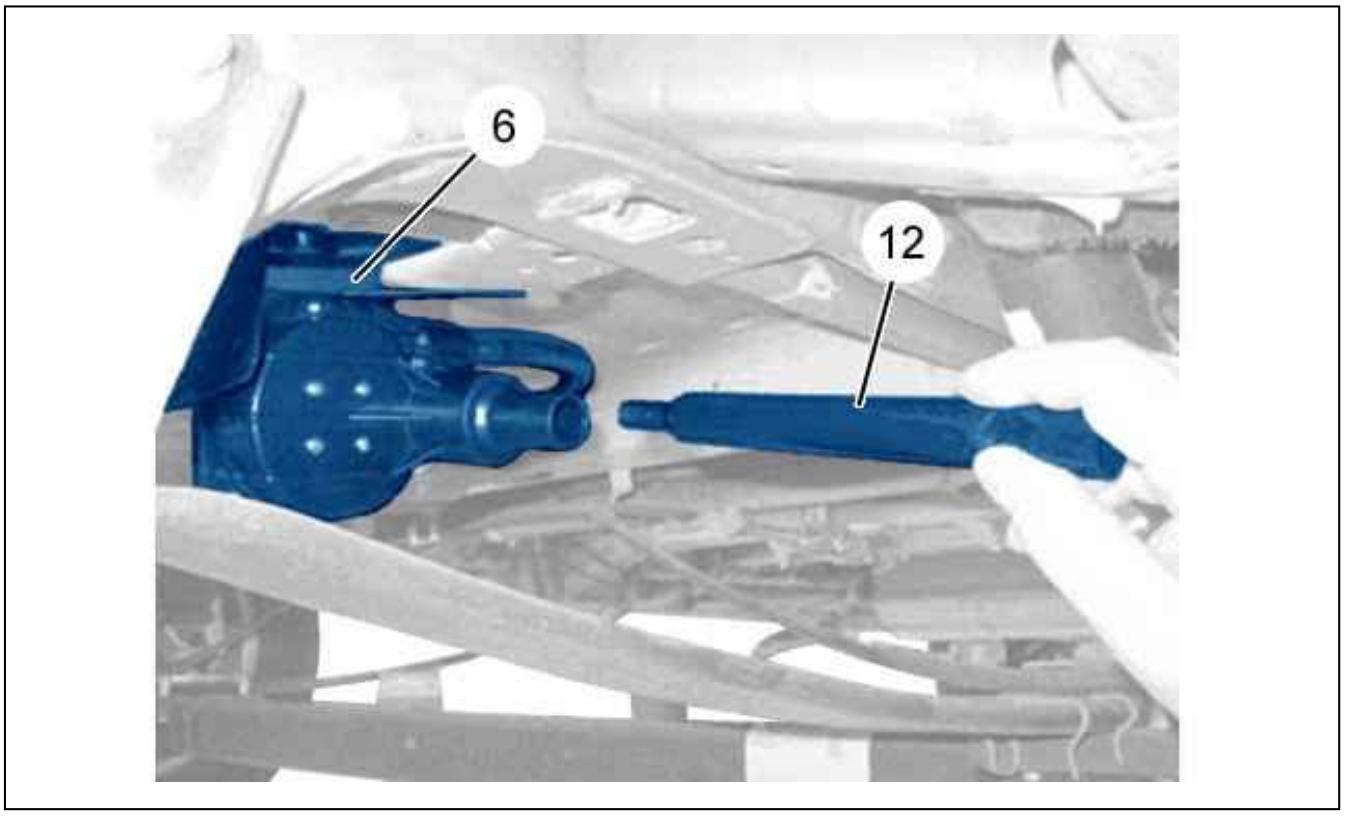

Figure : C5DGYARD

Insert the extension (12) into the housing provided on the control mechanism (6), checking that the assembly works properly by use of the wheel bolt removing tool provided as standard.

4. Refitting : Spare wheel

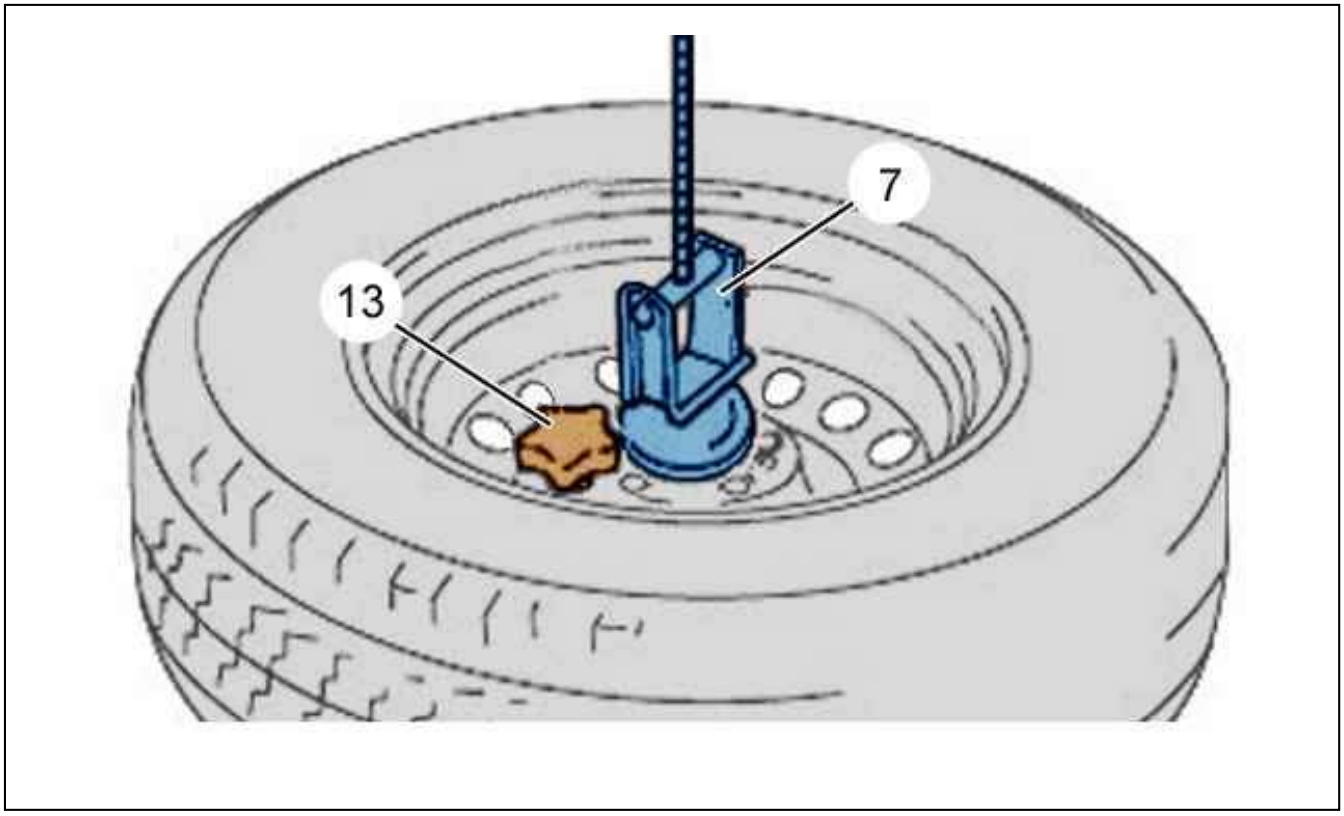

Figure : C5DGYB6D

Place the spare wheel in the winching position, anchor it to the support (7), and secure it with the nut (13).
Insert the wheel brace onto the extension (9).
Turn clockwise to raise the wheel, until the wheel is fully in place in the calipers under the floor.

CAUTION : Operate the control mechanism (6) only by using the wheel bolt removing tool; do not use electric/pneumatic drivers.

Refit the spare wheel.

REMOVING - REFITTING : INTERIOR TRIMS

ESSENTIAL : Observe the safety and cleanliness recommendations.

1. Recommended tools

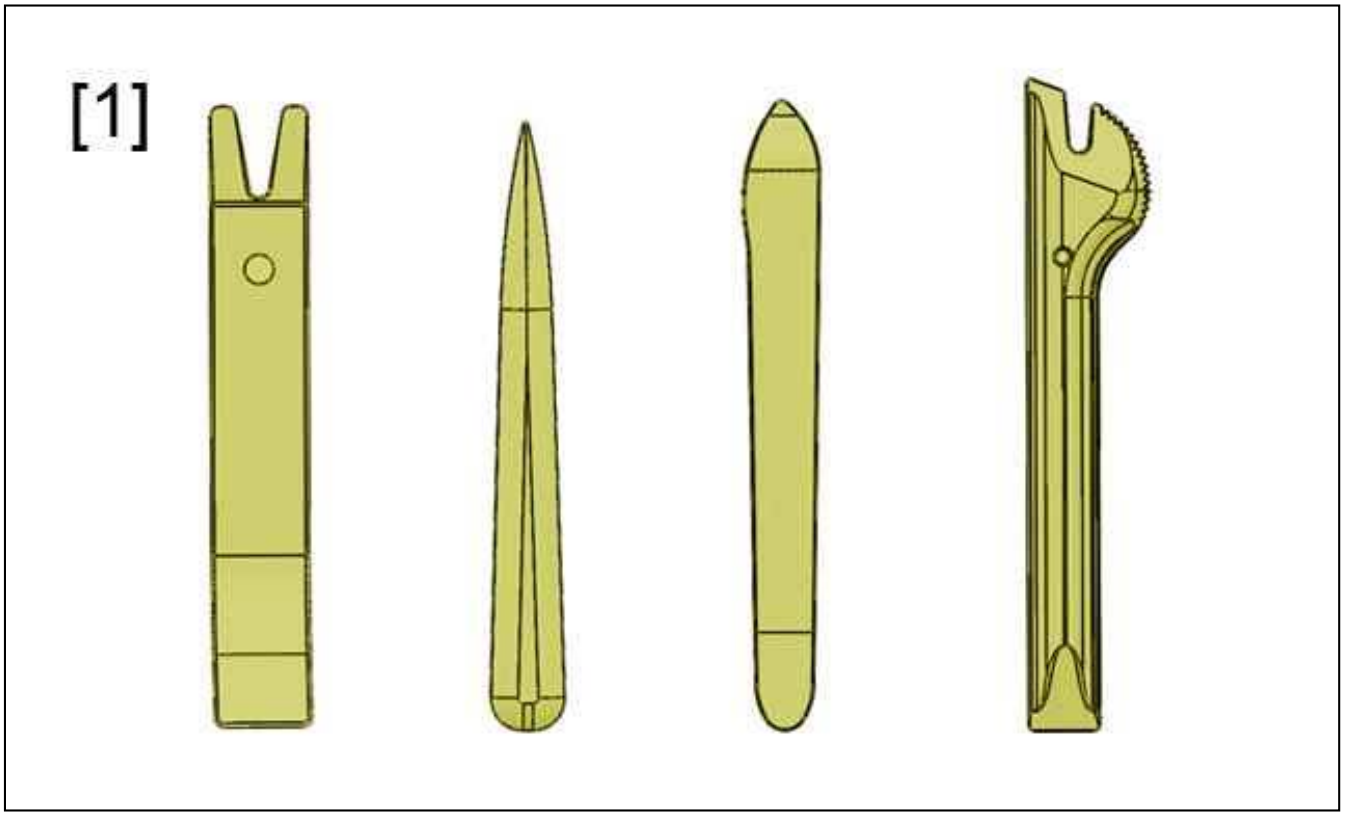

Figure : E5AP30WD

[1] Stripping tools (-).1350-ZZ.

2. Preliminary operations

Perform the following operations :

- Switch off the ignition
- Wait 3 minutes before disconnecting the battery
- Disconnect the battery

Remove :

- The rear parcel tray
- The rear door seal
- The sliding door seal
- The rear seats (row 2)
- The rear seats (row 3)

3. Removing

3.1. Rear door sill trim - Boot mat

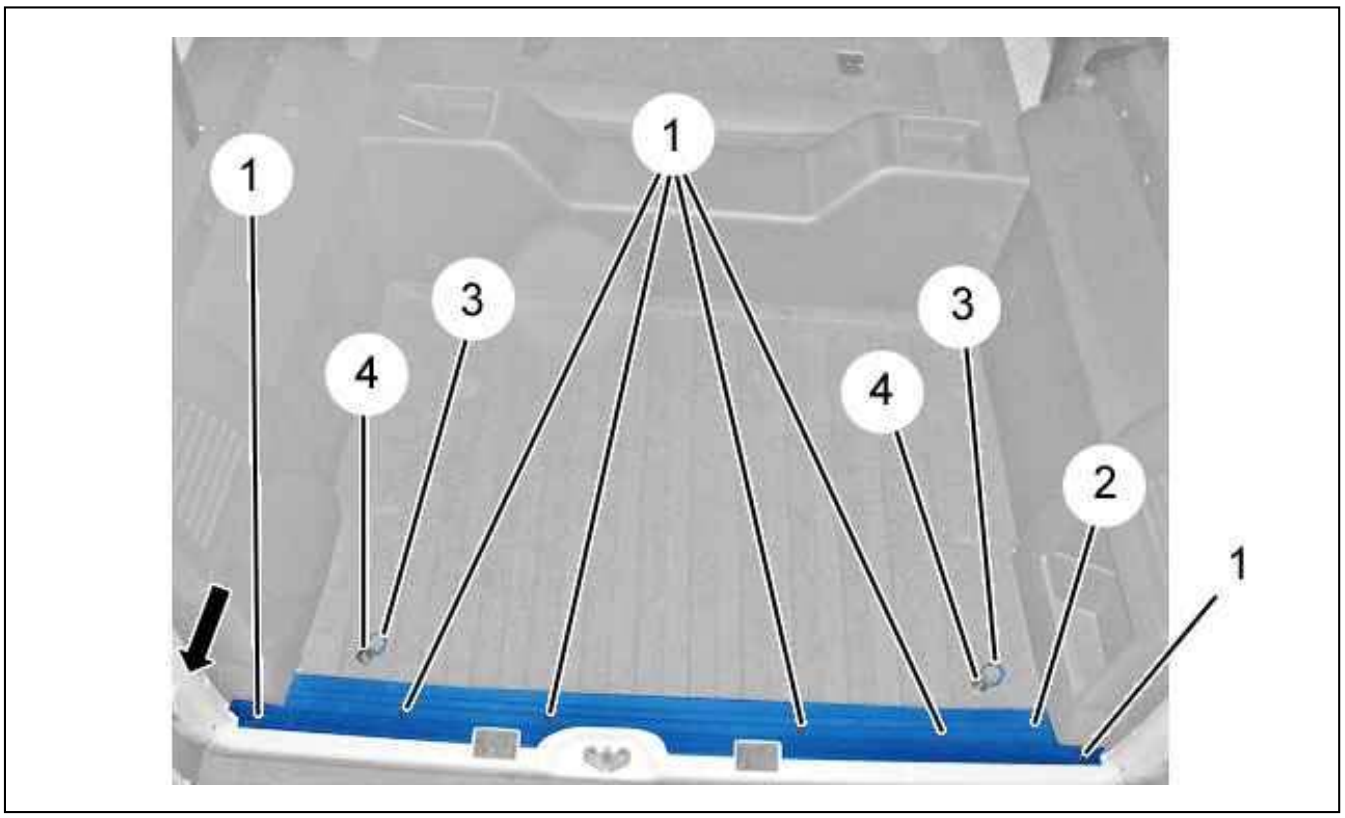

Figure : C5GM0C2D

Remove :

- The bolts (1), (4)
- The boot aperture trim (2) (Rear)(following the arrow)
- The fixing rings (3)

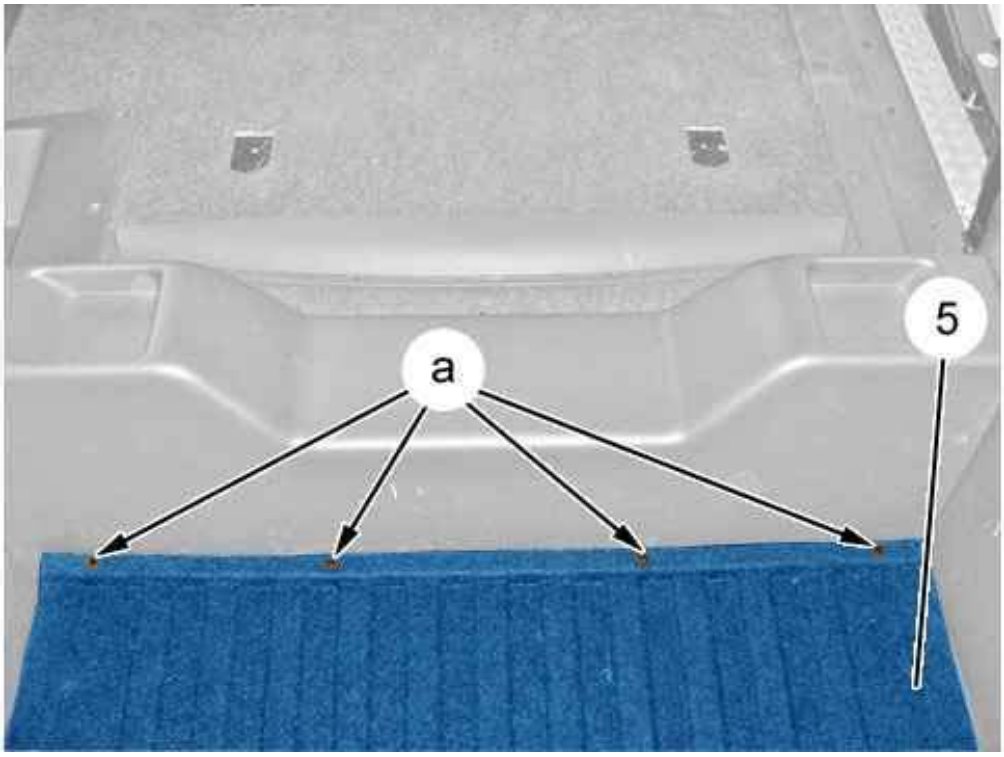

Figure : C5GM0C3D

Unclip the clips (at "a") ; Using tool [1].
Remove : The boot carpet (5).

3.2. Rear footwell trims (left and right hand sides)

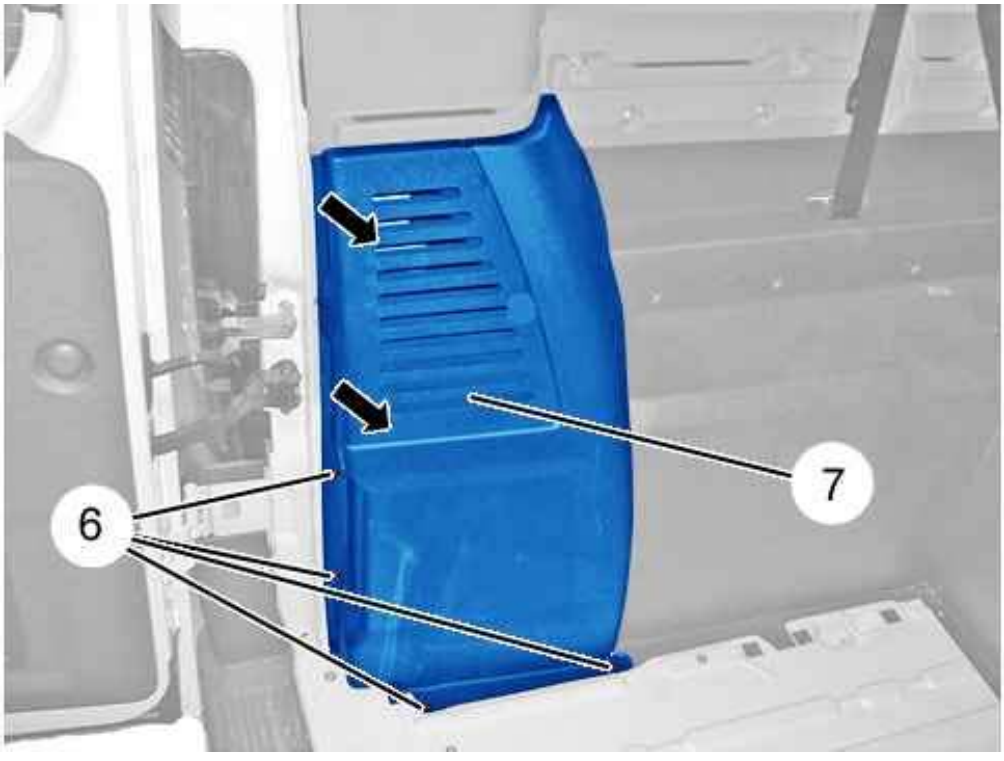

Figure : C5GM0C4D

Remove the bolts (6).
Detach and remove the grid (7) ; Using tool [1].

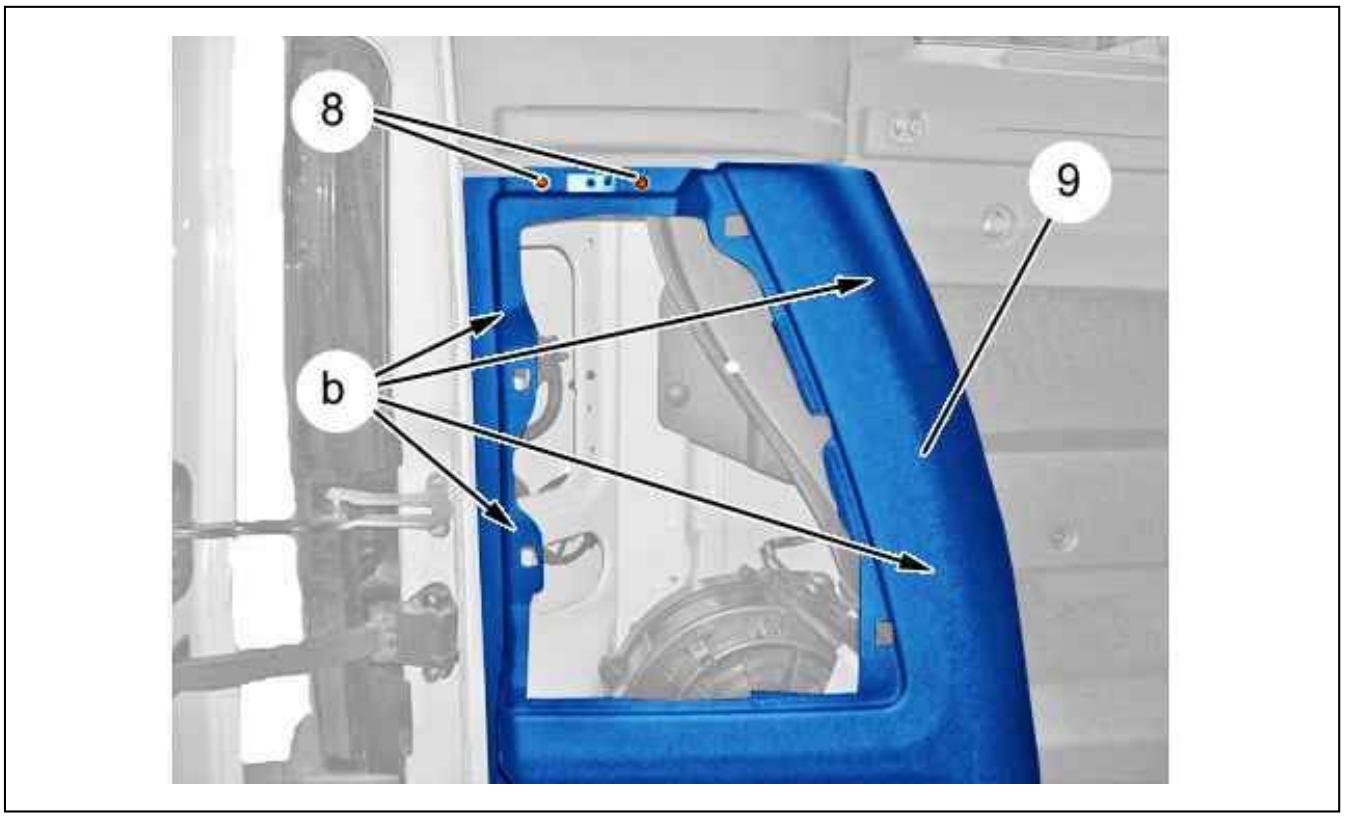

Figure : C5GM0C5D

Remove the bolts (8).
Unclip and remove : The interior trim of the C post (9) (at "b") ; Using tool [1].

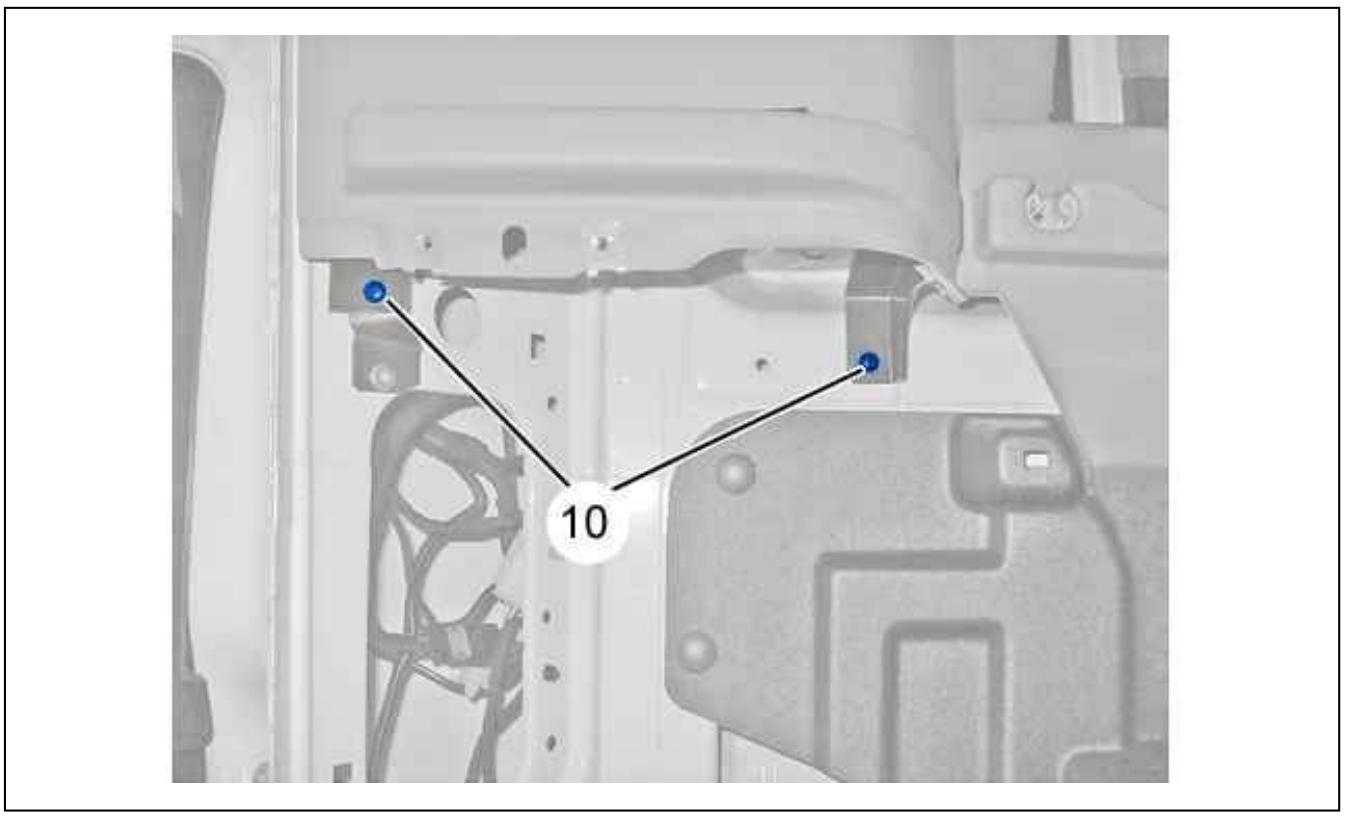

Figure : C5GM0C6D

Remove the bolts (10).

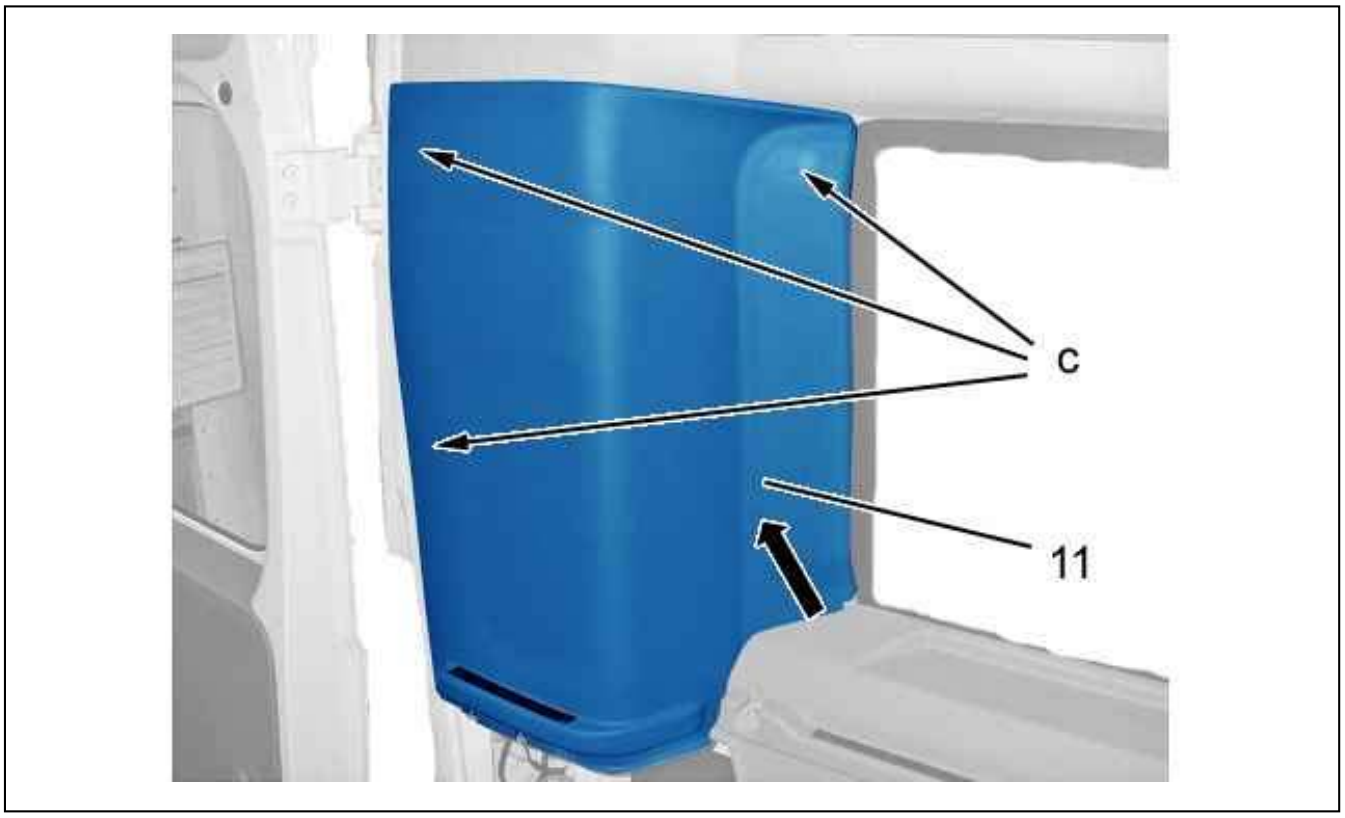

Figure : C5GM0C7D

Unclip the fixings (at "c") ; Using tool [1].
Detach : The rear pillar upper trim (11) (following the arrow).
Remove : The rear pillar upper trim (11).

3.3. Central rear trim

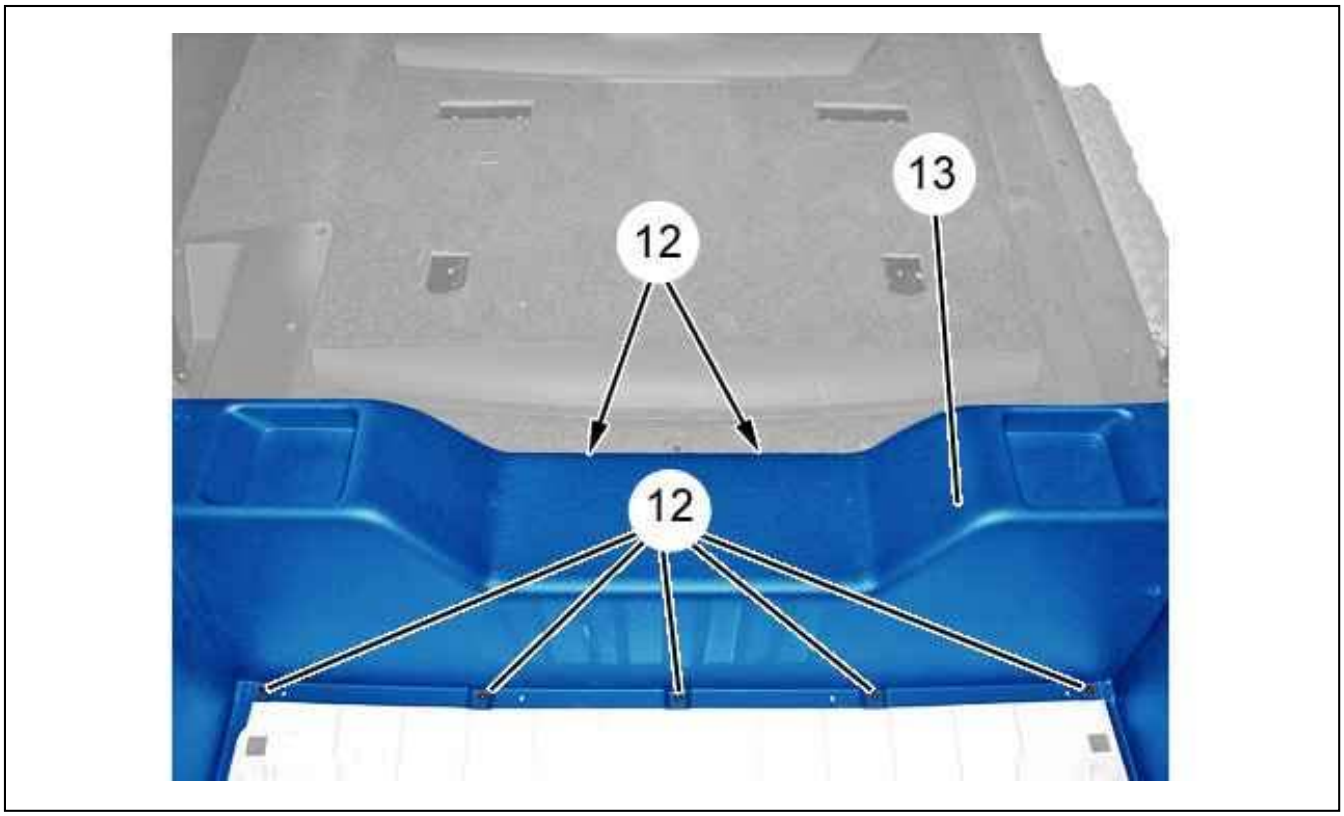

Figure : C5GM0C8D

Remove :

- The bolts (12)
- The trim (13)

3.4. Rear panel trim (left and right hand sides)

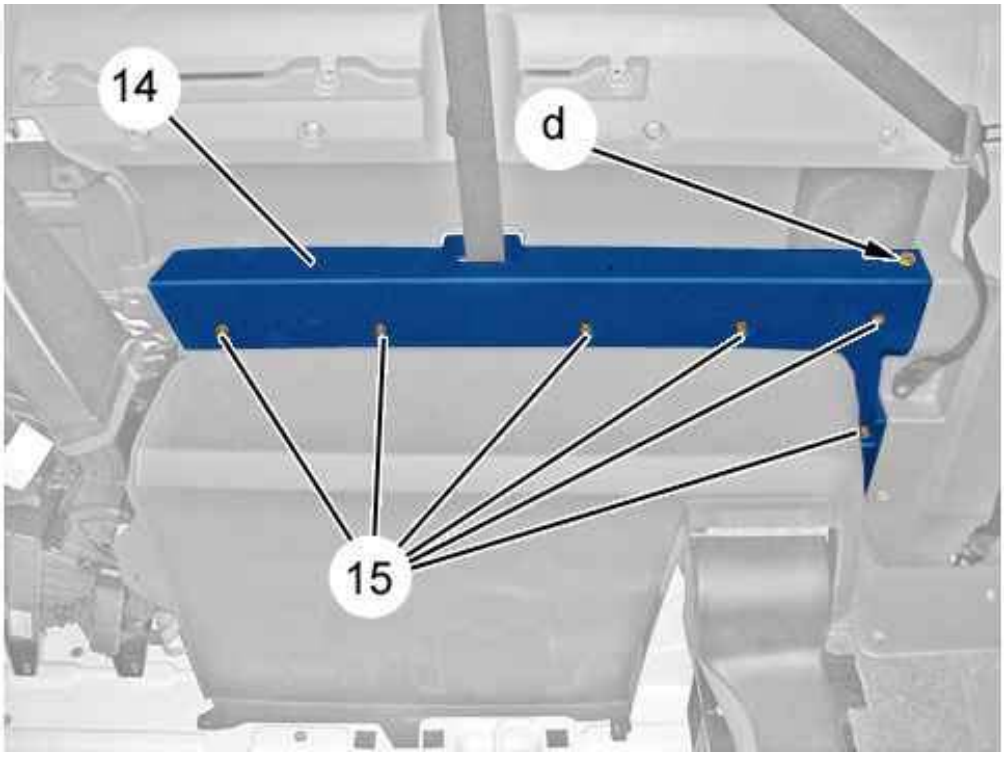

Figure : C5GM0C9D

Unclip the clip (at "d") ; Using tool [1].
Remove the bolts (15).
Detach : The lower trim of the rear panel (14).

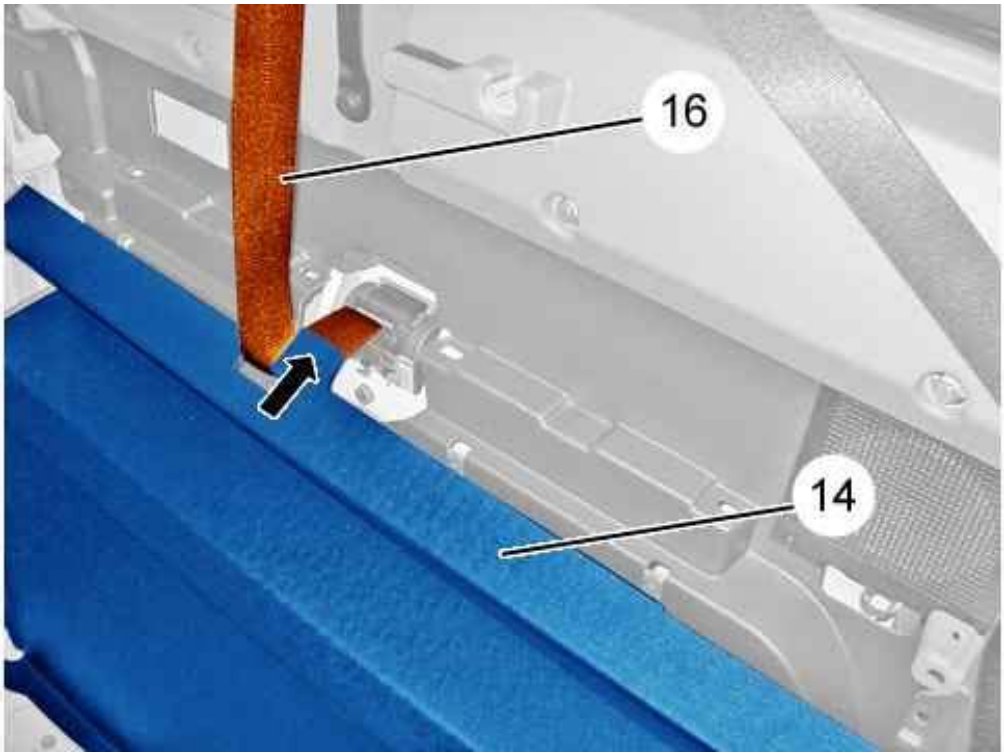

Figure : C5GM0CAD

Detach : The seat belt (16) (following the arrow).

Remove :

- The bottom trim (14)
- The rear seat belt (row 3)
- rear speakers

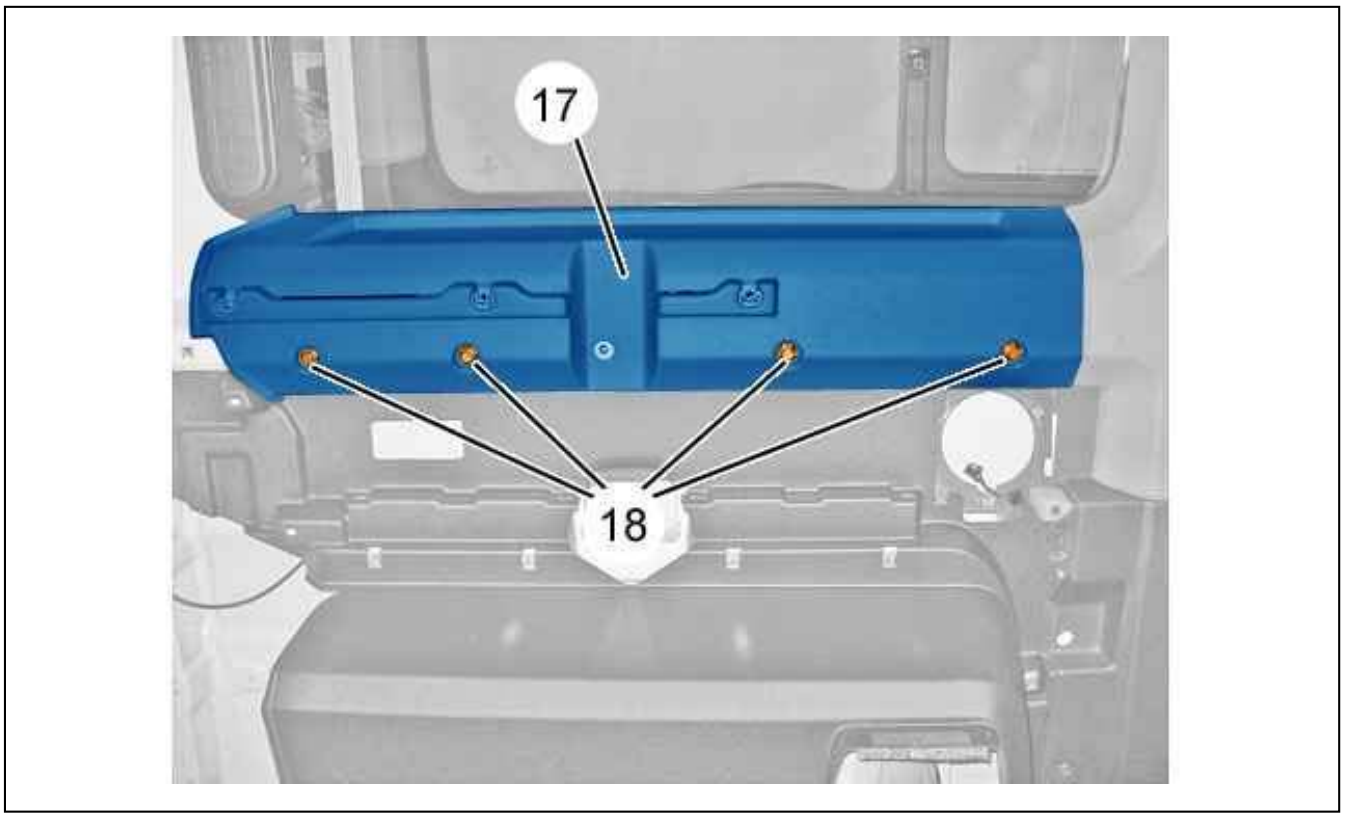

Figure : C5GM0CBD

Remove :

- The bolts (18)
- The upper trim of the rear panel (17)

3.5. boot lamp (right hand side)

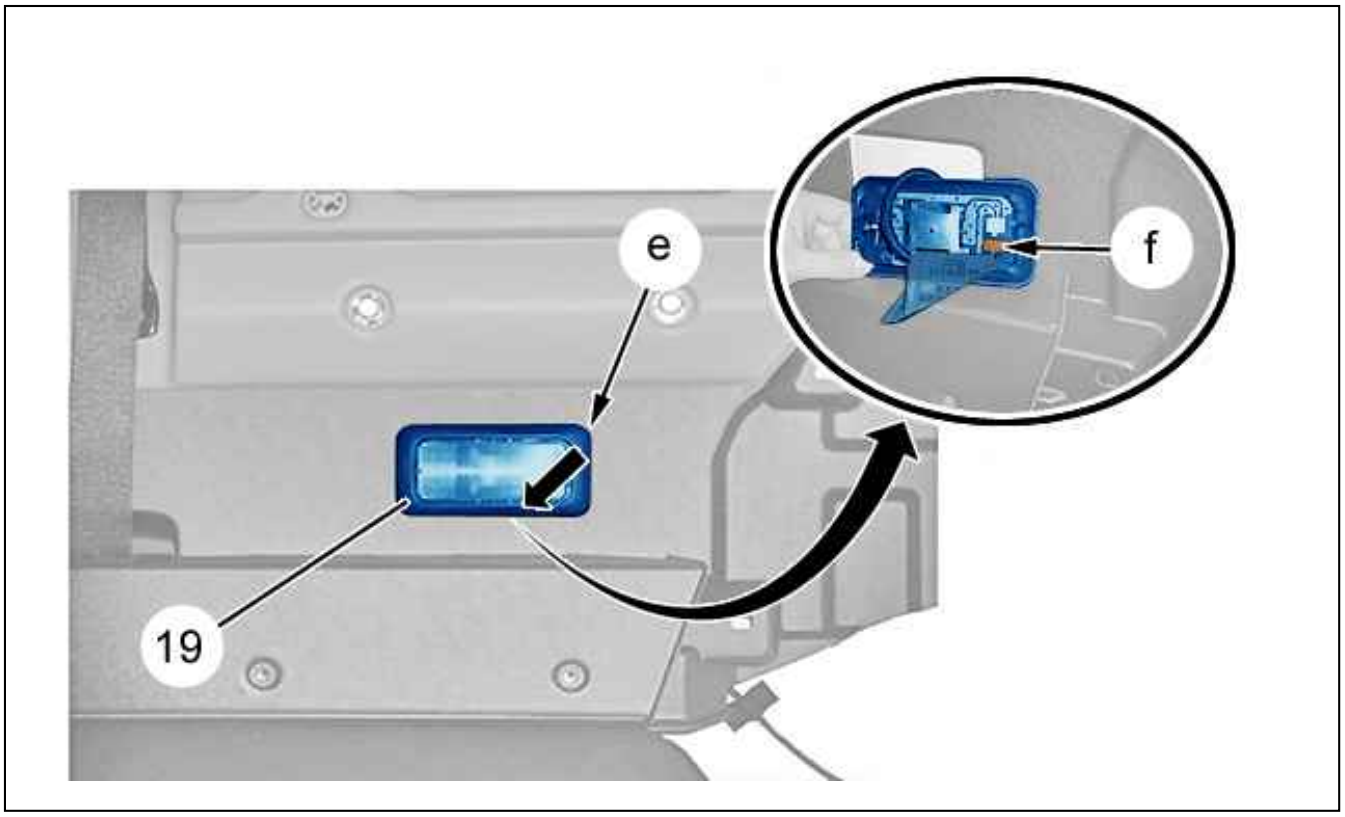

Figure : C5GM0CCD

Unclip : The boot light at (19) (at "e") ; Using tool [1].
Disconnect the connector (at "f").
Remove : The boot light at (19).

3.6. Centre pillar trim panel (left side)

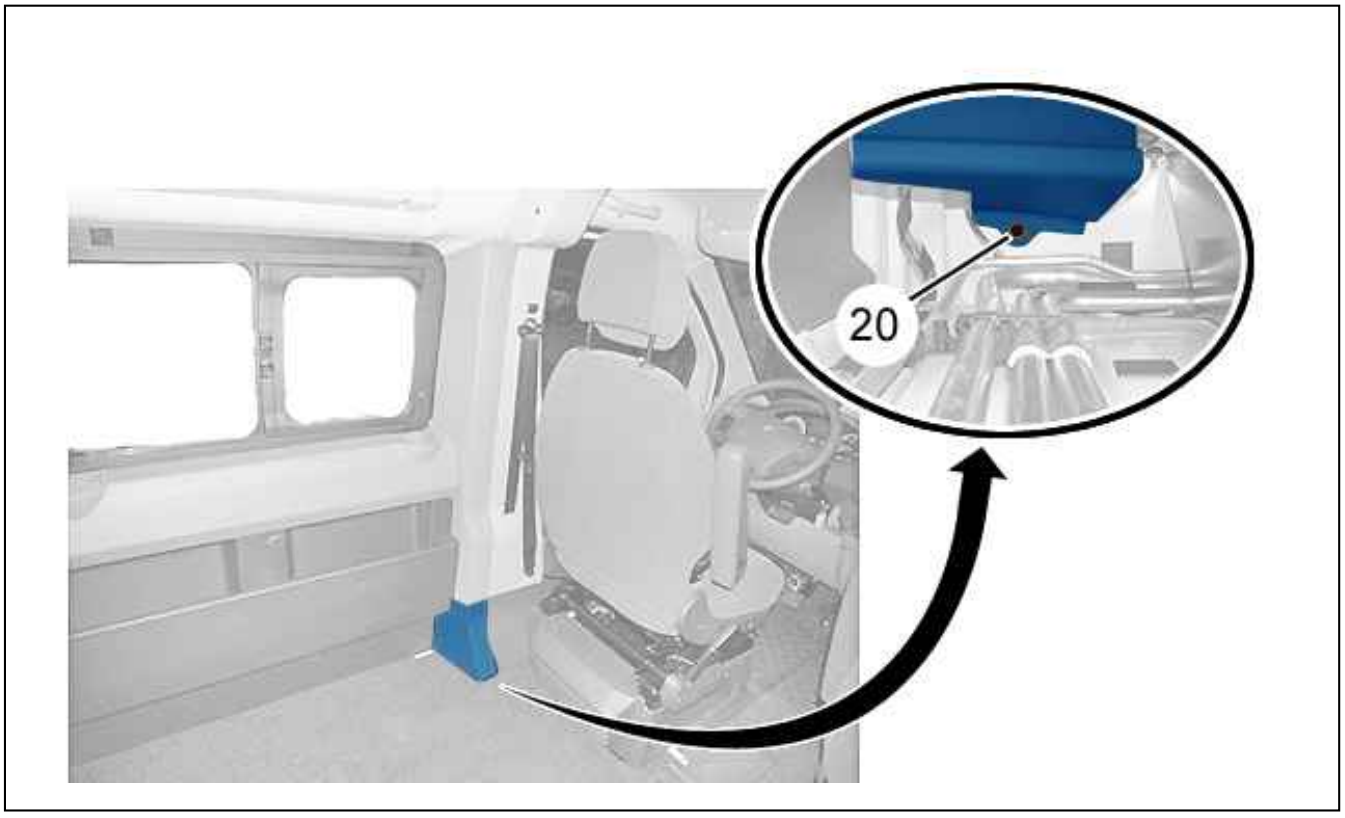

Figure : C5GM0CDD

Detach : The carpet - The soundproofing (left side).
Remove bolts (20).

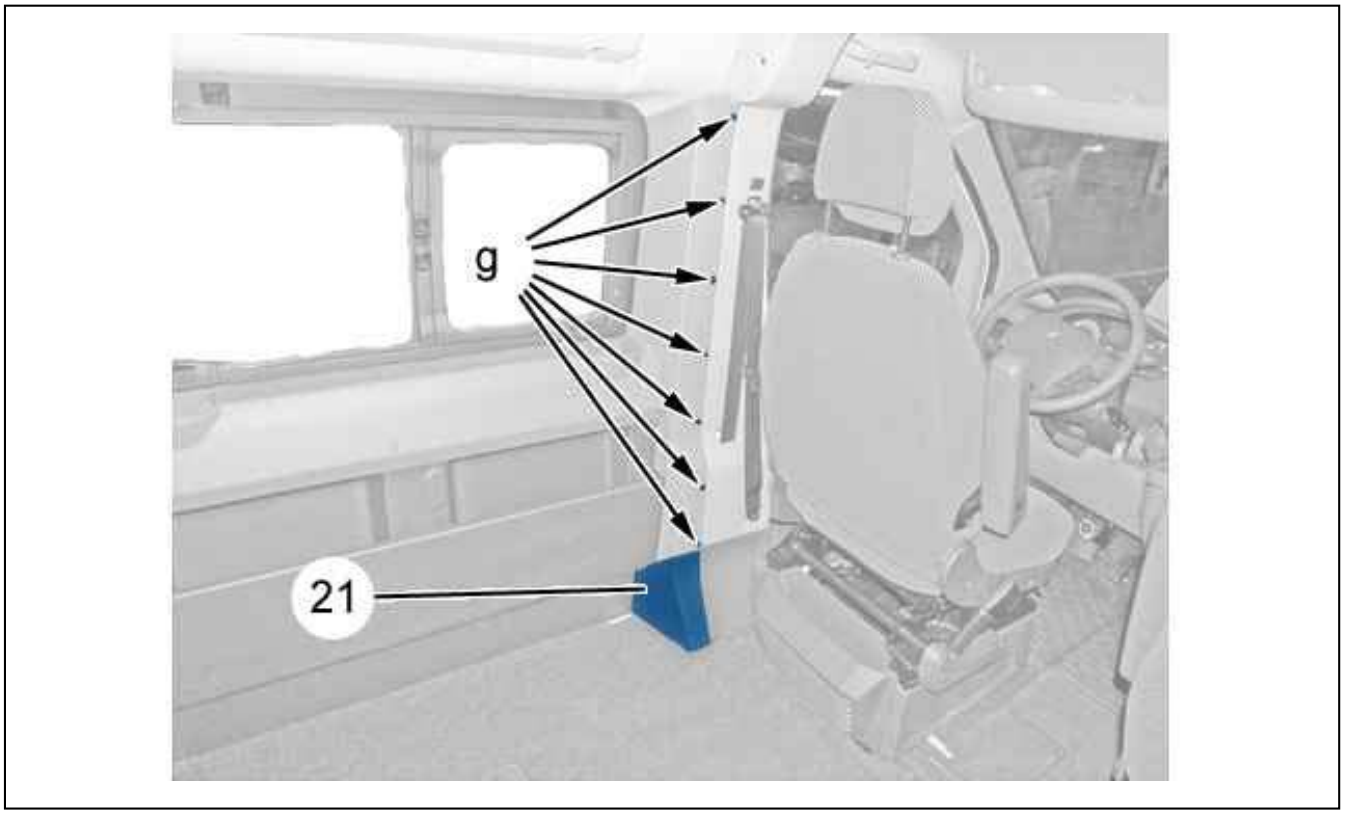

Figure : C5GM0CED

Unclip the clips (at "g") ; Using tool [1].
Remove : The B/C post trim (21) (left side).

3.7. Front structure

Remove : The interior trims (front section).

3.8. Special feature : Front structure (right hand side)

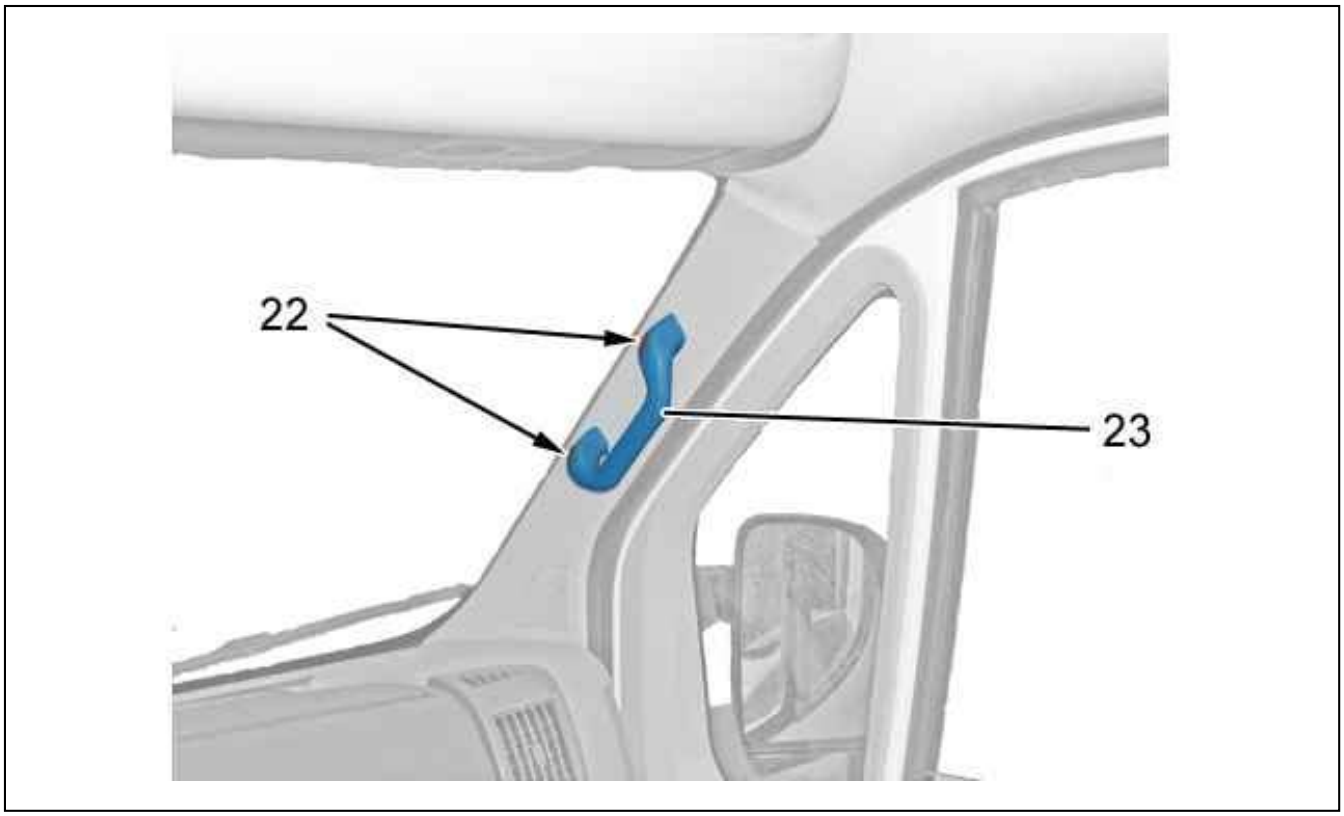

Figure : C5GM0CFD

Remove :

- The bolts (22)
- The grab handle (23)

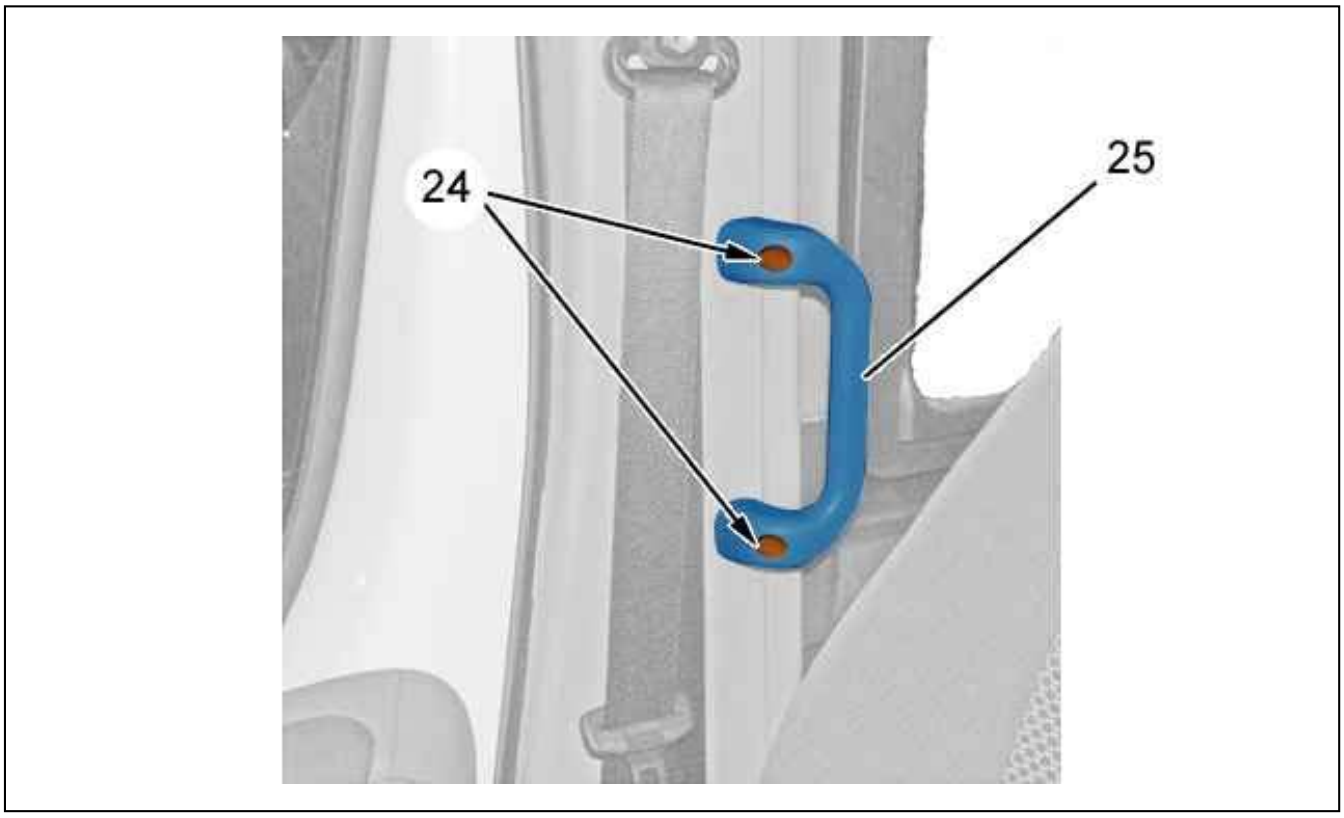

Figure : C5GM0CGD

Remove :

- The bolts (24)
- The grab handle (25)

3.9. Sliding door sill trim (right hand side)

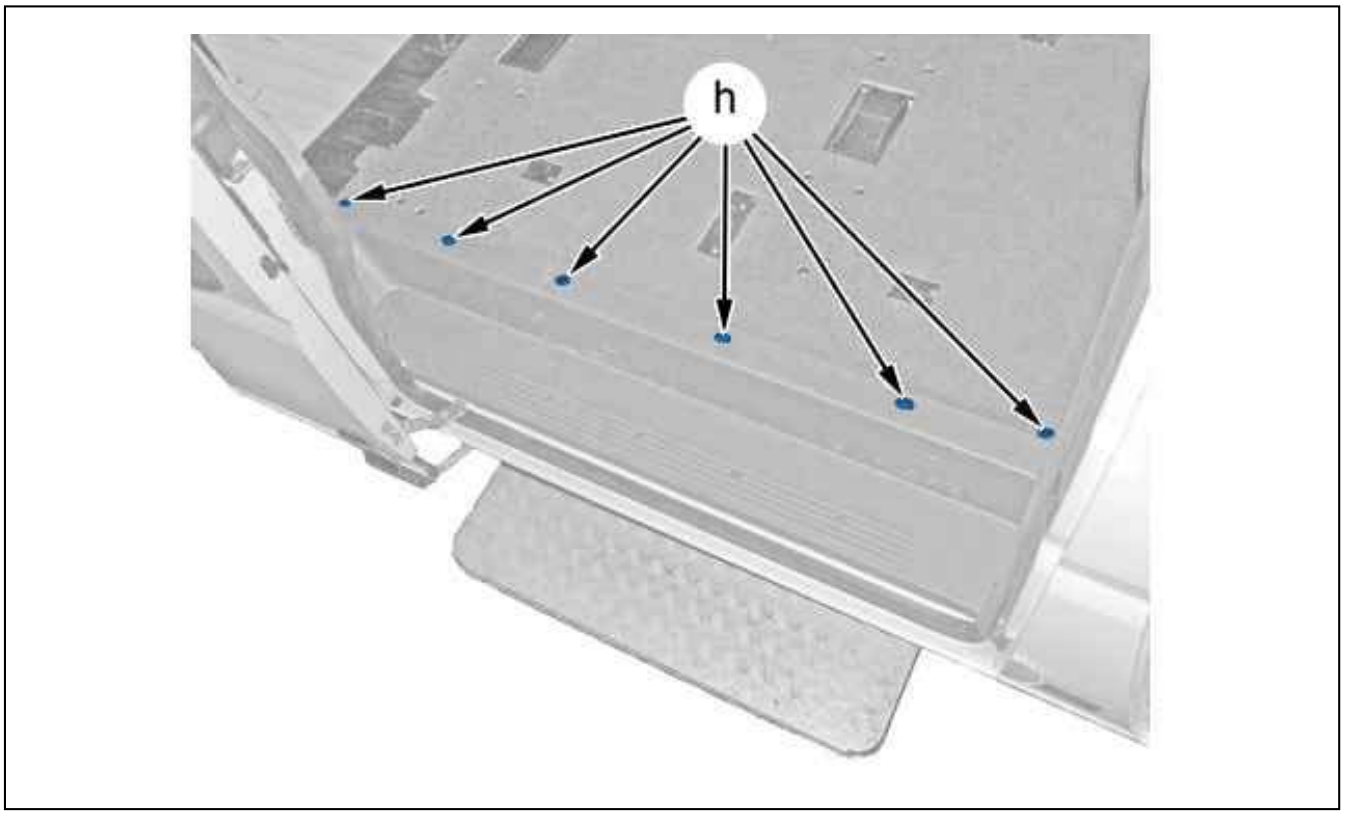

Figure : C5GM0CHD

Unclip the covers (at "h") ; Using tool [1].

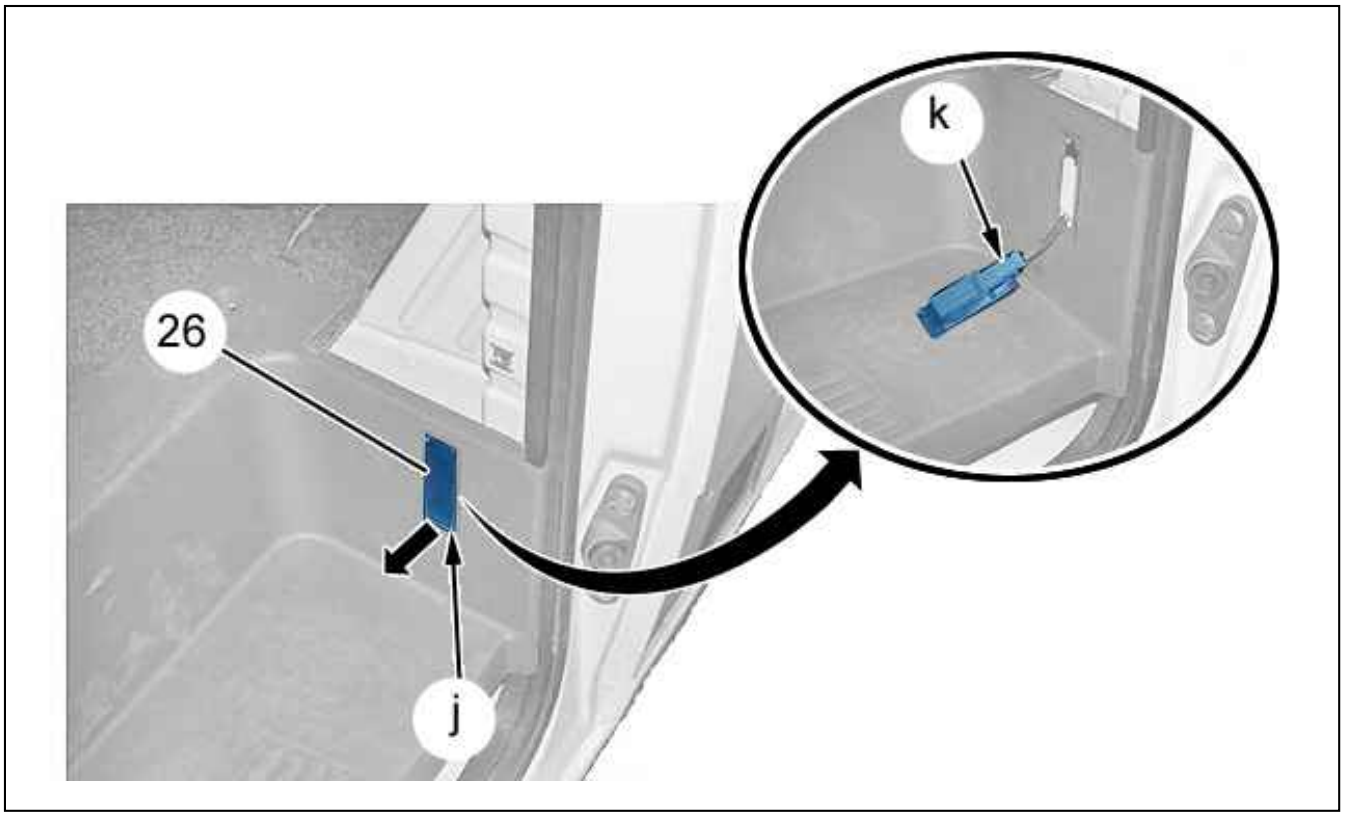

Figure : C5GM0CJD

Unclip : The sliding door light (26) (at "j") (following the arrow).
Disconnect the connector (at "k").
Remove : The sliding door light (26).

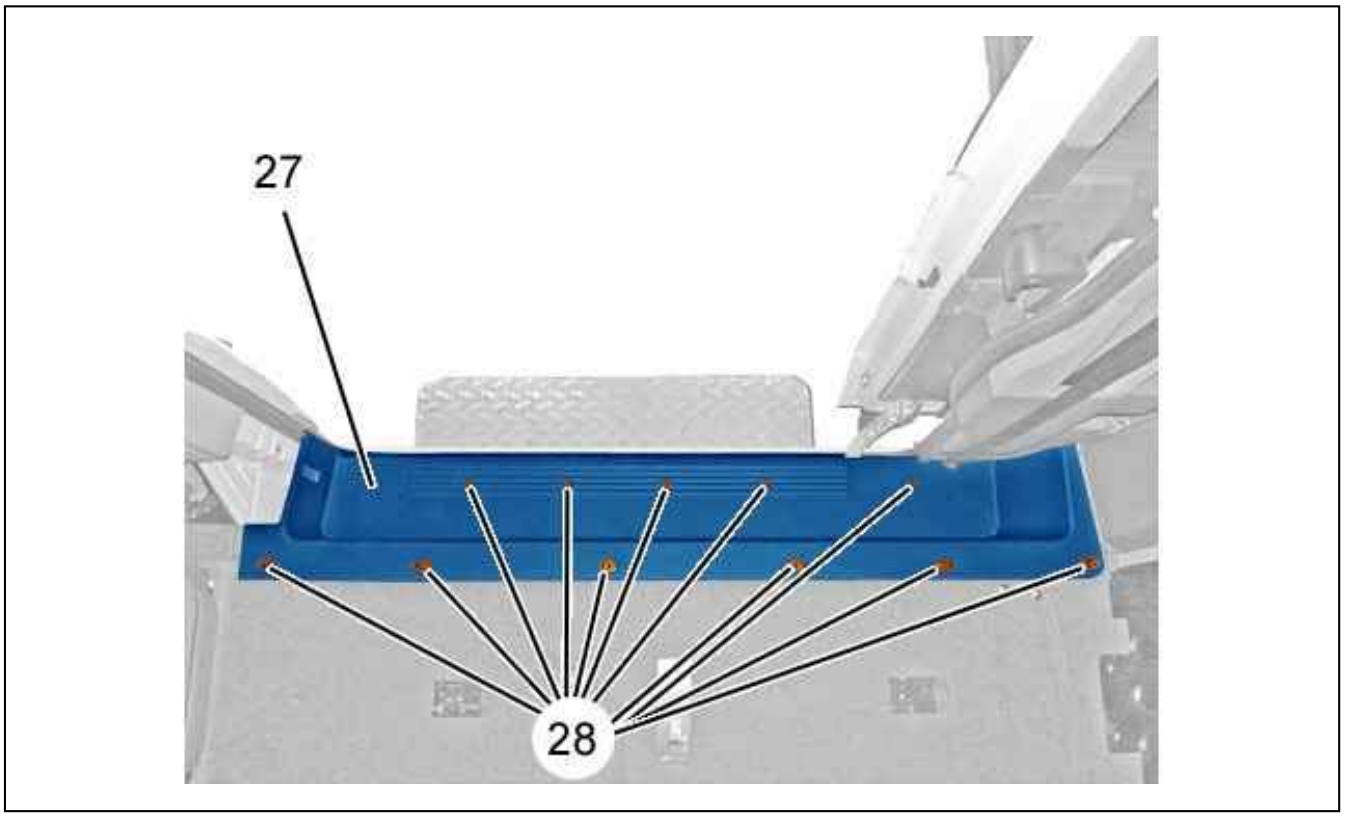

Figure : C5GM0CKD

Remove :

- The bolts (28)
- The sliding door sill trim (27)

3.10. Side panel upper trim (left side)

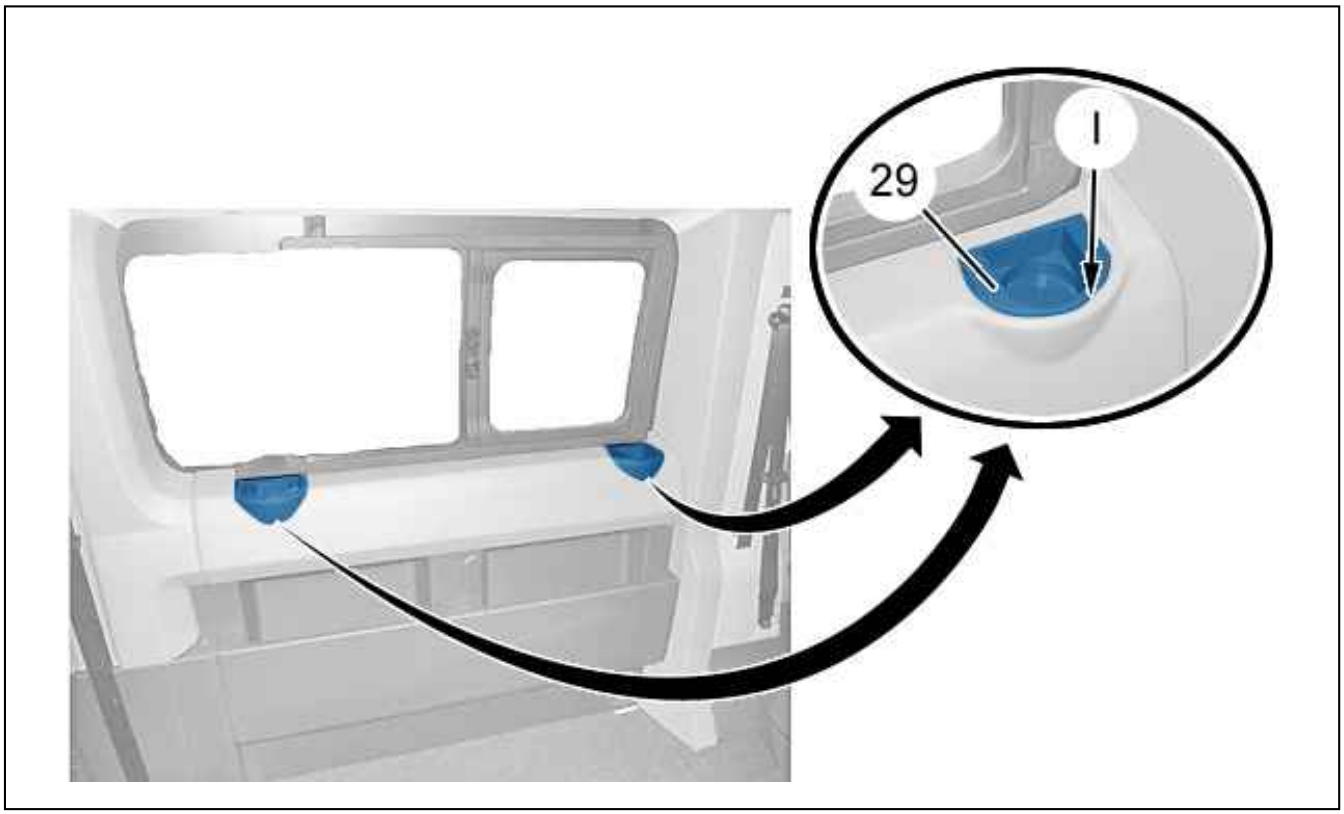

Figure : C5GM0CLD

Unclip the covers (29) (at "I") ; Using tool [1].
Remove : The covers (29).

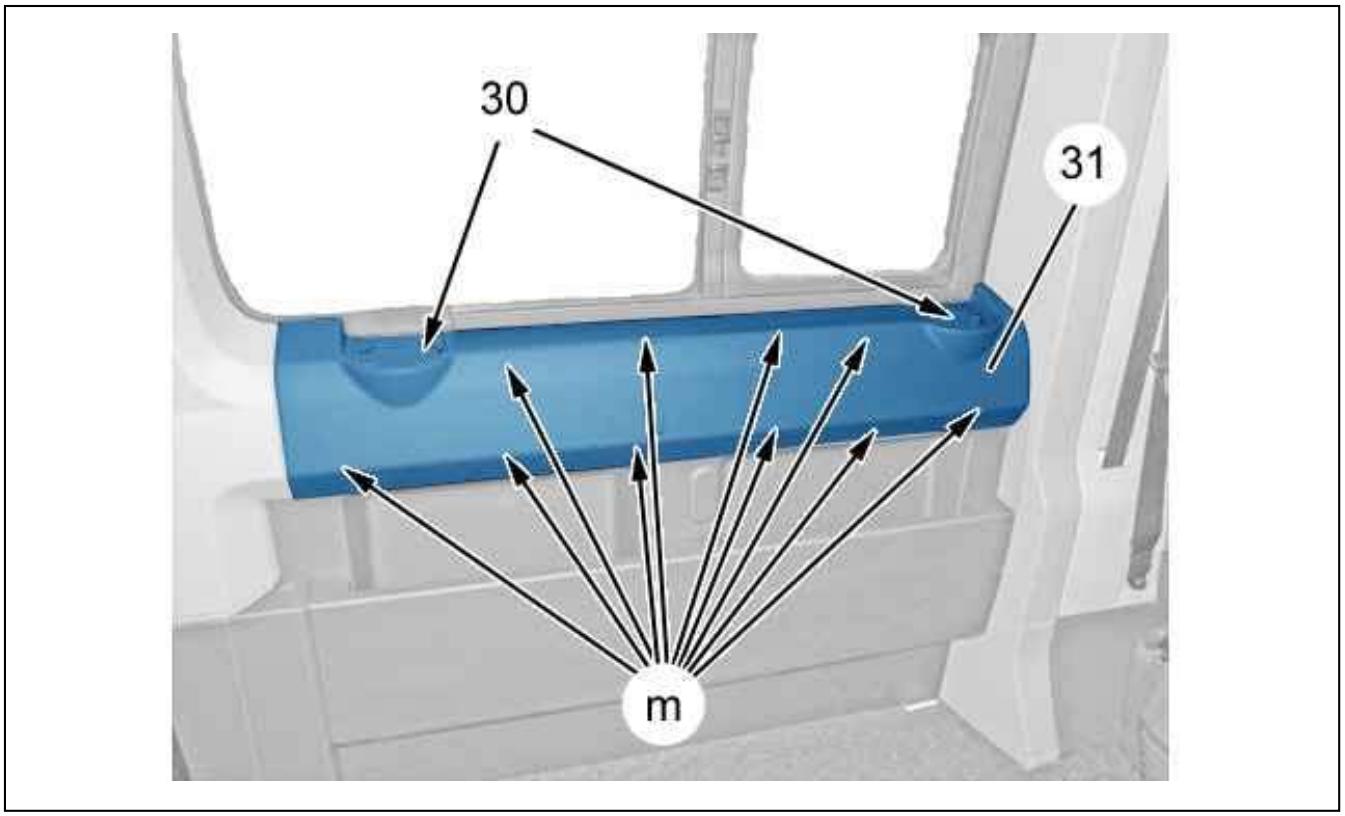

Figure : C5GM0CMD

Remove the bolts (30).
Unclip : Side panel upper trim (31) (left side) (at "m") ; Using tool [1].
Remove : Side panel upper trim (31) (left side).

3.11. Centre pillar trim panel (right hand side)

Detach : The rear seat belt (row 2).

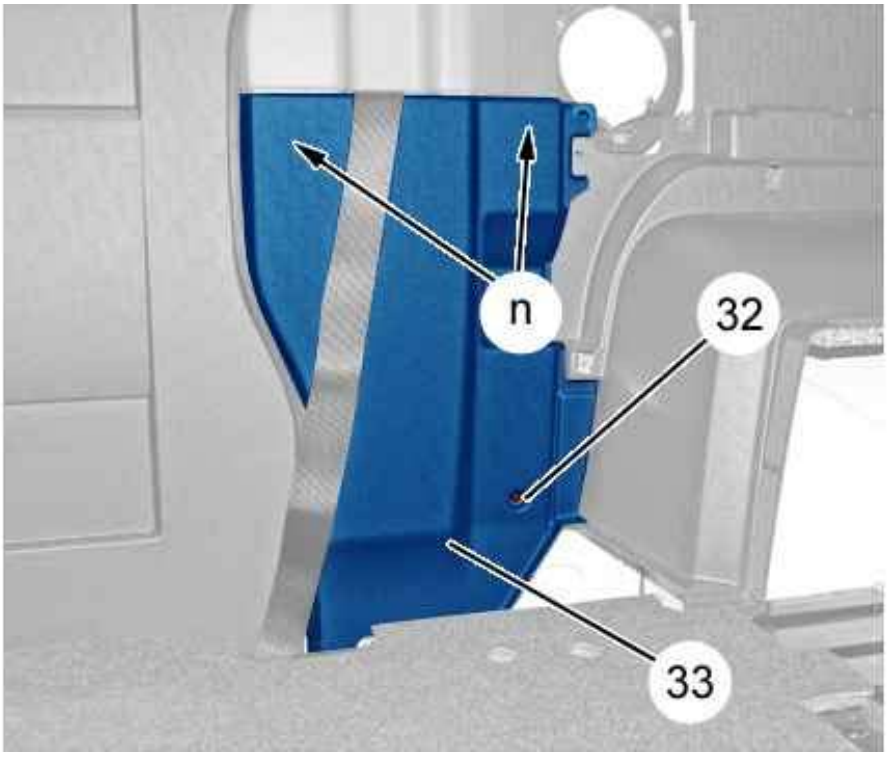

Figure : C5GM0CND

Remove bolts (32).
Unclip the centre pillar lower trim (33) (at "n") ; Using tool [1].
Remove the centre pillar lower trim (33).

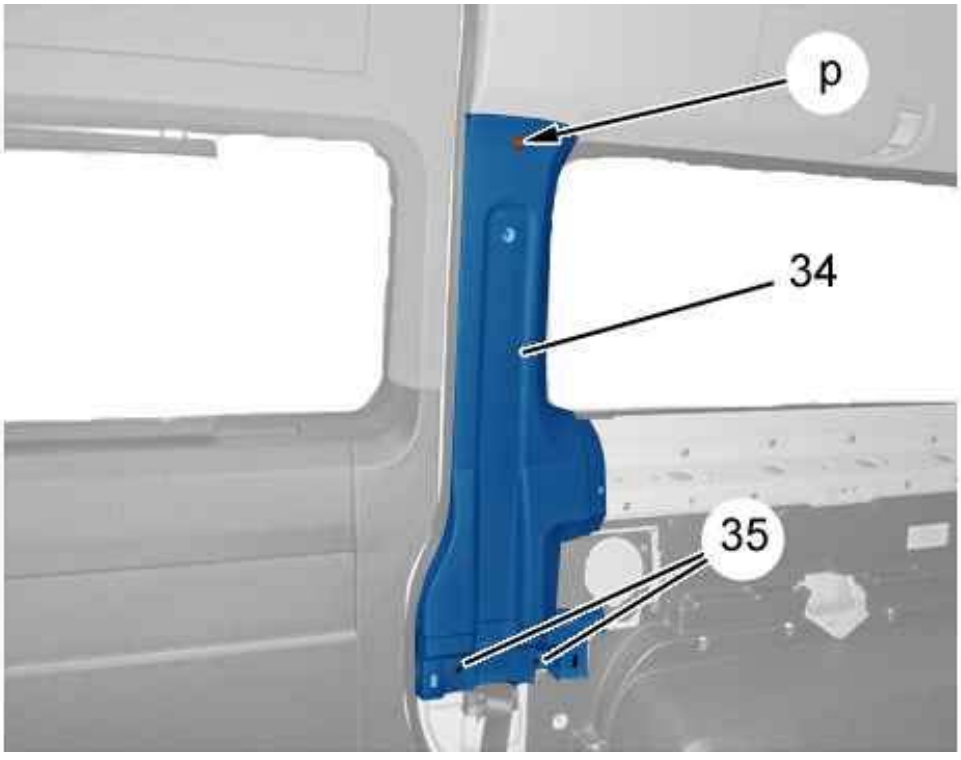

Figure : C5GM0CPD

Remove the bolts (35).
Detach the centre pillar upper trim (34) (at "p") ; Using tool [1].
Remove the b/c post upper trim (34).

3.12. Centre pillar trim panel (left side)

Detach : The lower part of the rear seatbelt (row 2).

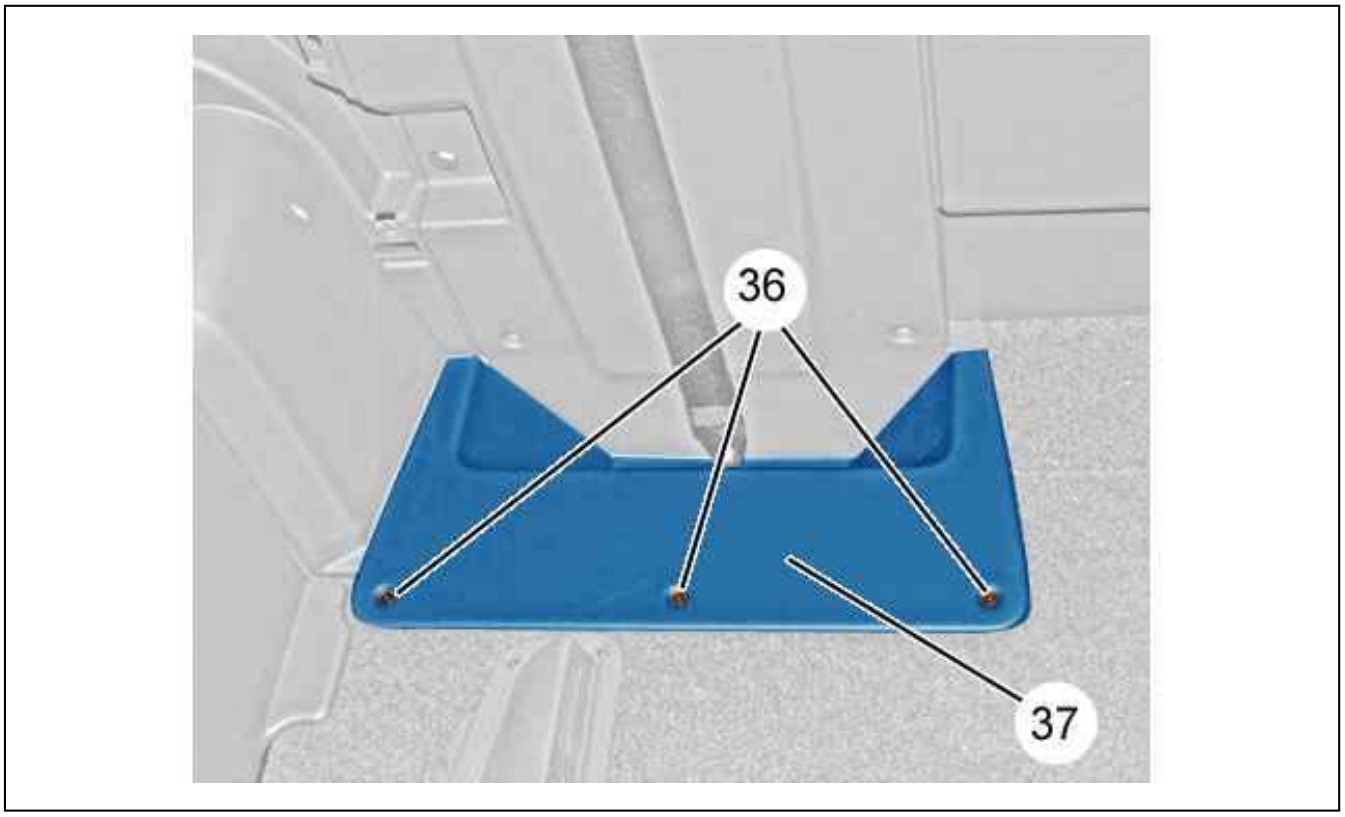

Figure : C5GM0CQD

Remove :

- The bolts (36)
- The trim (37)

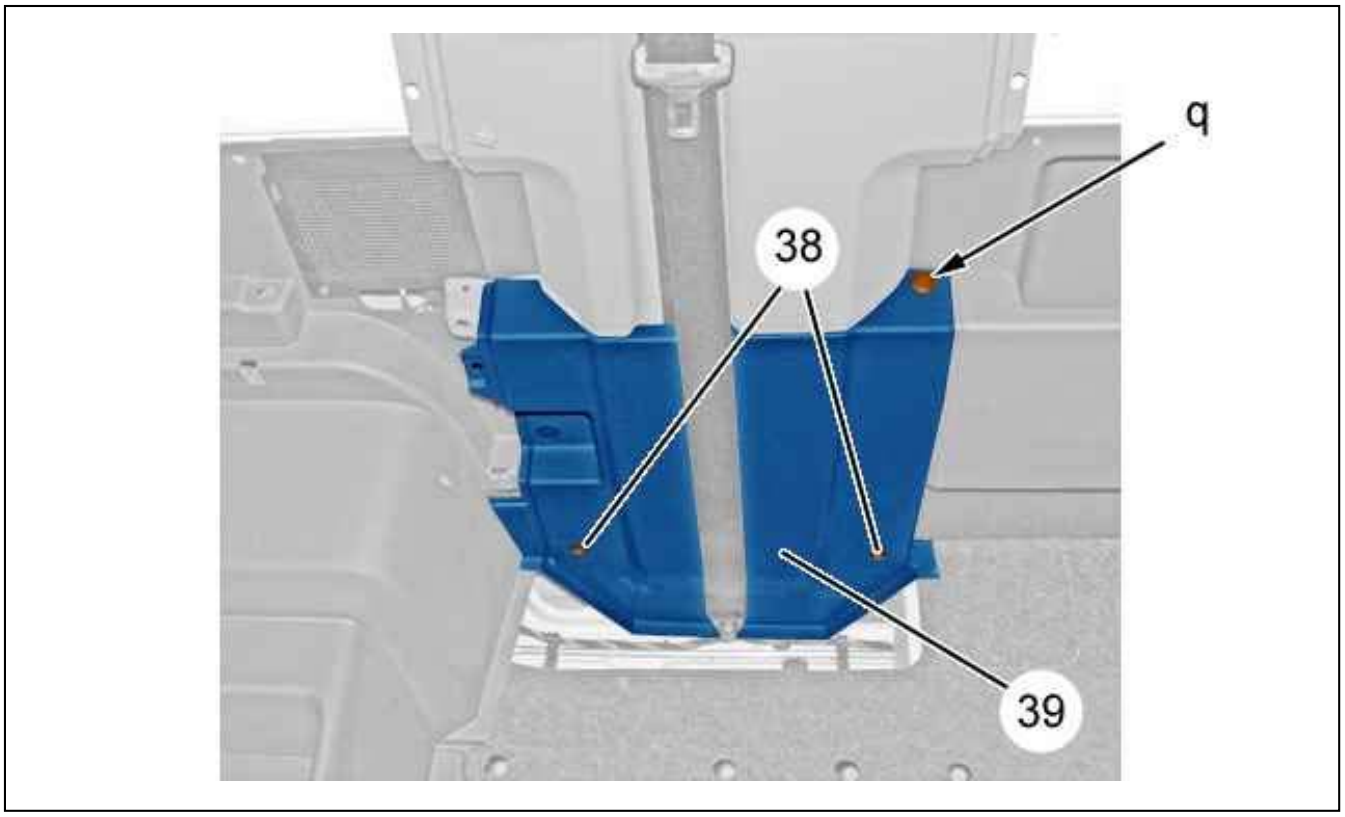

Figure : C5GM0CRD

Unclip the clip (at "q") ; Using tool [1].
Remove :

- The bolts (38)
- The centre pillar lower trim (39)

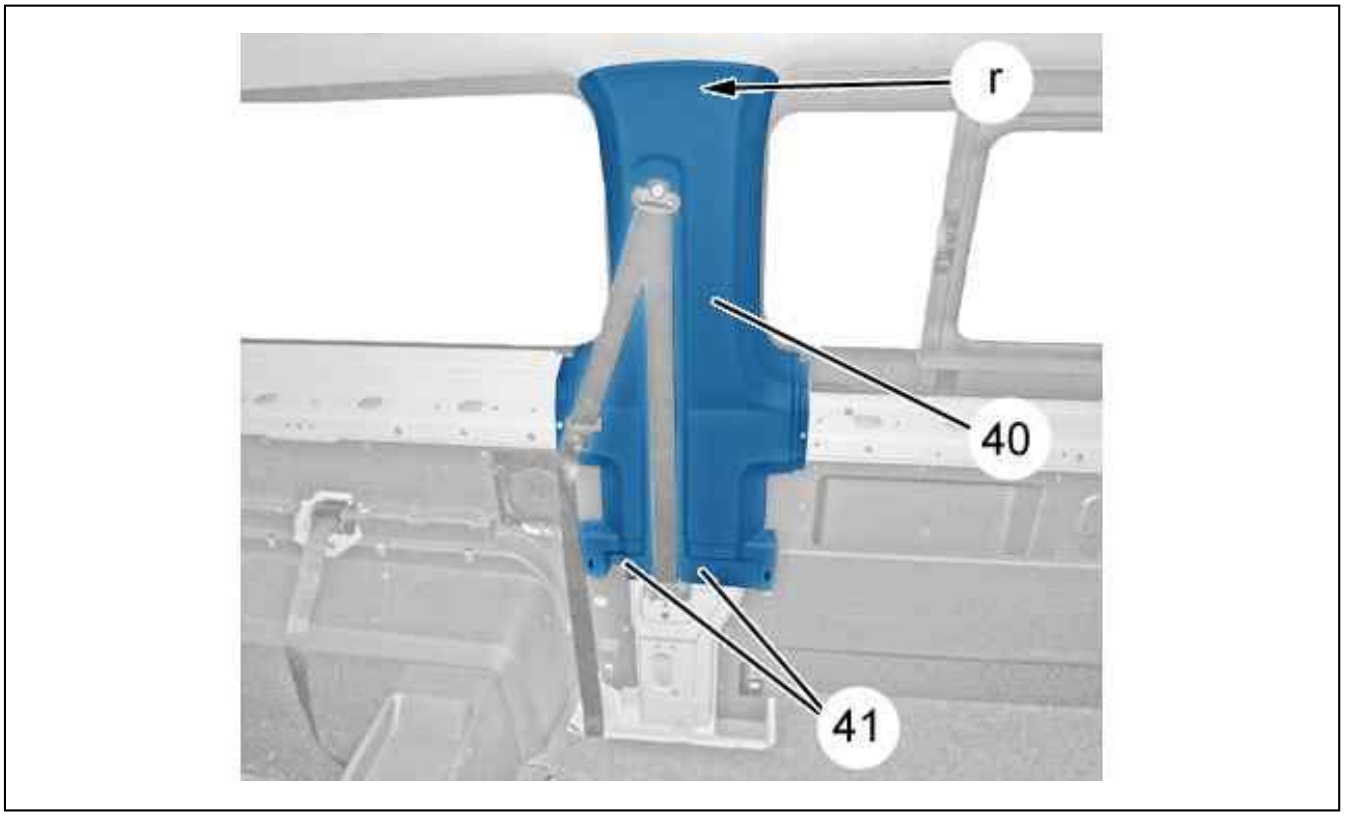

Figure : C5GM0CSD

Detach : The upper part of the rear seatbelt (row 2).
Remove the bolts (41).
Detach the centre pillar upper trim (40) (at "r") ; Using tool [1].
Remove the b/c post upper trim (40).

3.13. Wheel arch lining (left and right hand sides)

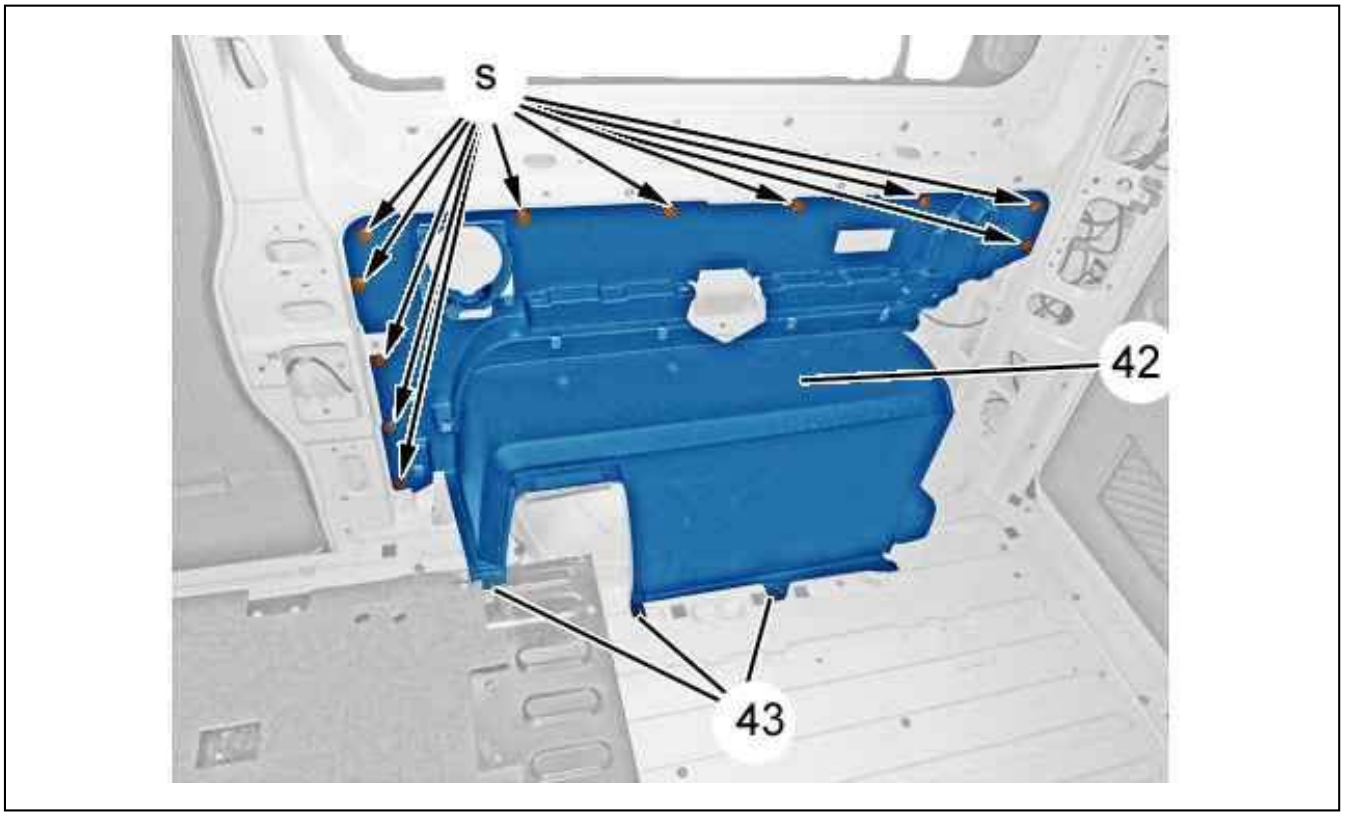

Figure : C5GM0CTD

Unclip the wheel arch trim (42) (at "s") ; Using tool [1].
Remove :

- The bolts (43)
- The wheel arch trim (42)

3.14. Side panel trim (left side)

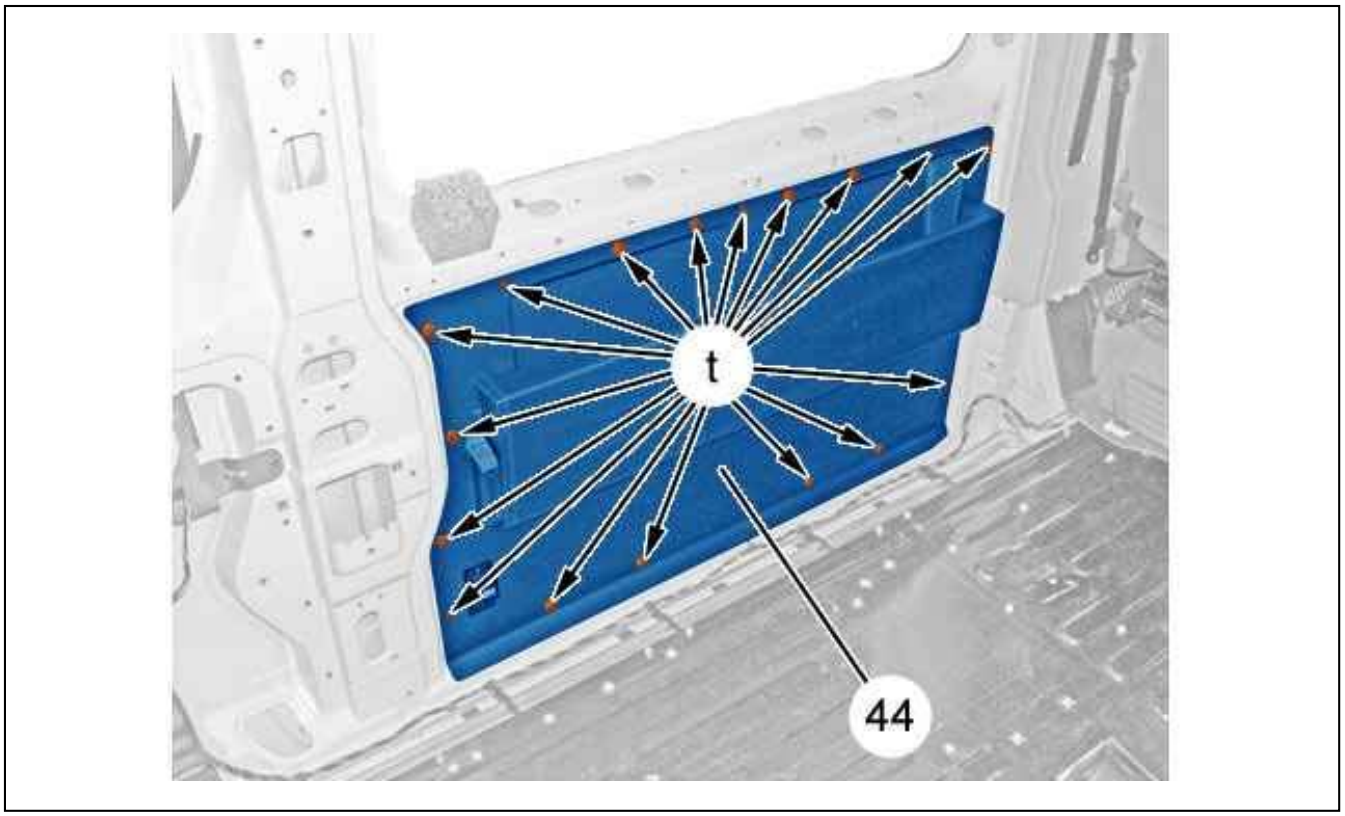

Figure : C5GM0CUD

Unclip : Side panel trim (44) (left side) (at "t") ; Using tool [1].
Remove : Side panel trim (44) (left side).

4. Refitting

ESSENTIAL : Always replace : Damaged clips.

Proceed in the reverse order to removal.
Tighten :

- The bolts (1), (8), (10), (12), (15), (20), (28), (30), (32), (35), (36), (38), (41), (43) to 1 ± 0,1 daN.m
- The bolts (4), (18), (22), (24) to 2 ± 0,4 daN.m

Check all the equipment works.

REMOVING - REFITTING : REAR SEAT FRAME (CREW CAB)

ESSENTIAL : Observe the safety and cleanliness recommendations .

1. Recommended tools

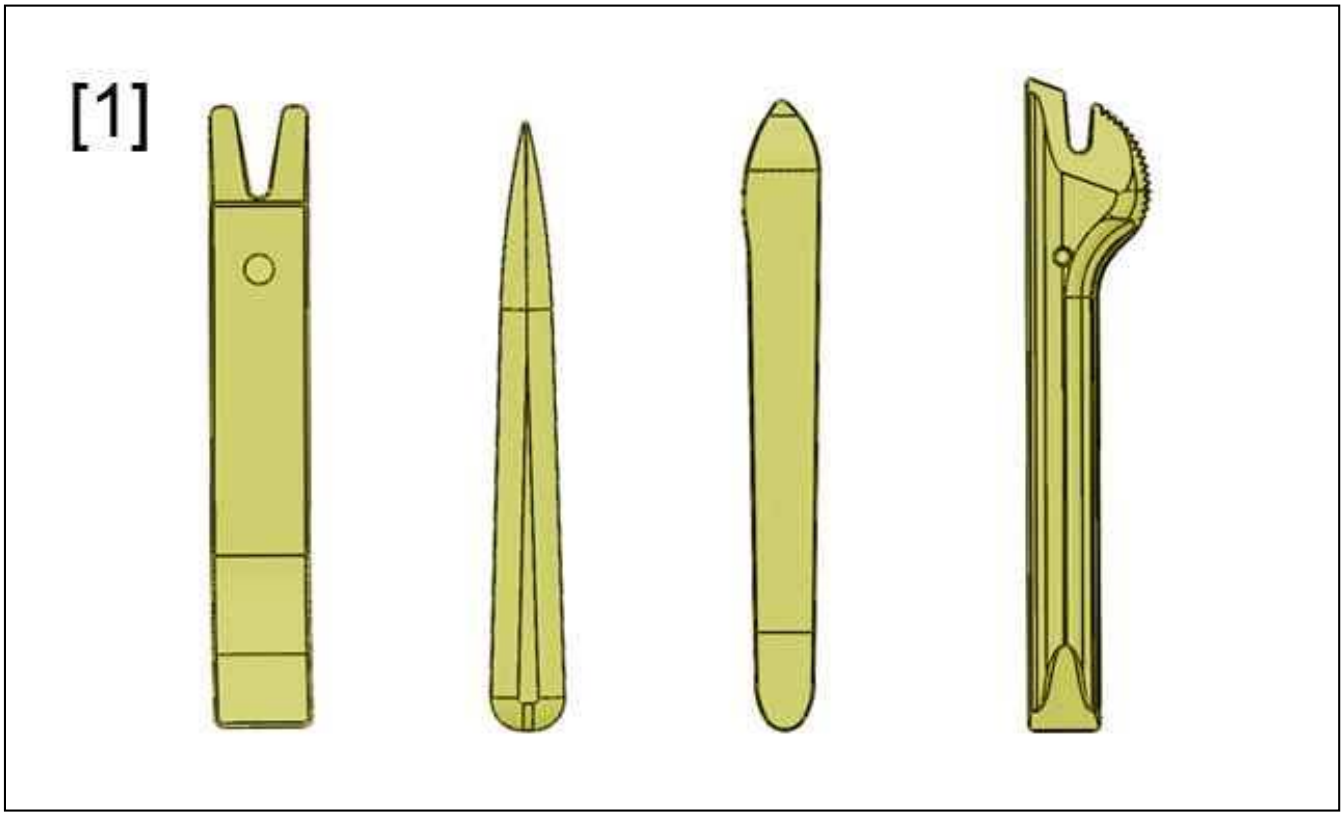

Figure : E5AP30WD

[1] Stripping tools (-).1350.

2. Preliminary operations

Remove :

- The rear bench seat
- The extended cab trims

3. Removing



Figure : C5GM1DBD

(1) Rear seat frame.

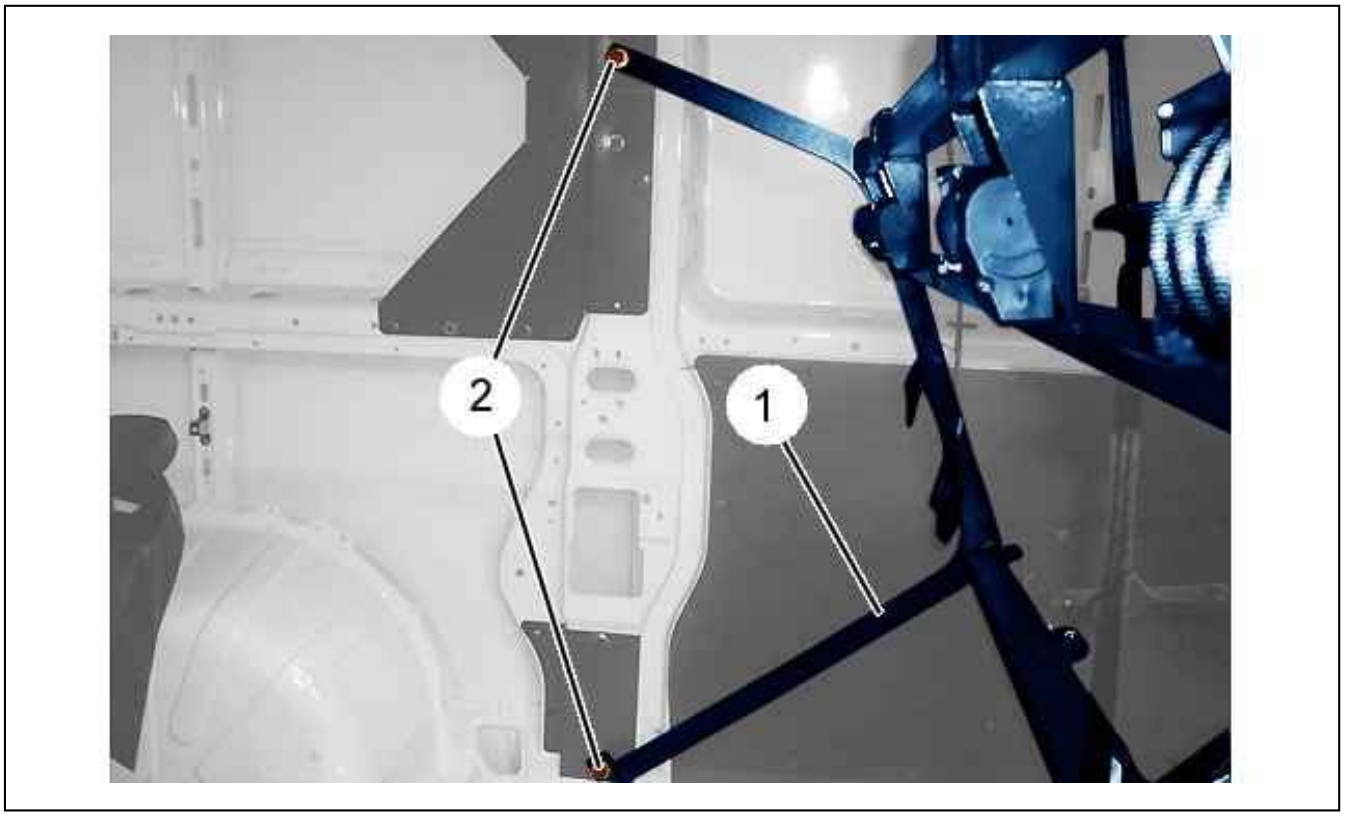

Figure : C5GM1DCD

CAUTION : Two people are required to perform the following operation.

Remove :

- The bolts (2) (Symmetrical operation)
- The rear seat frame (1)

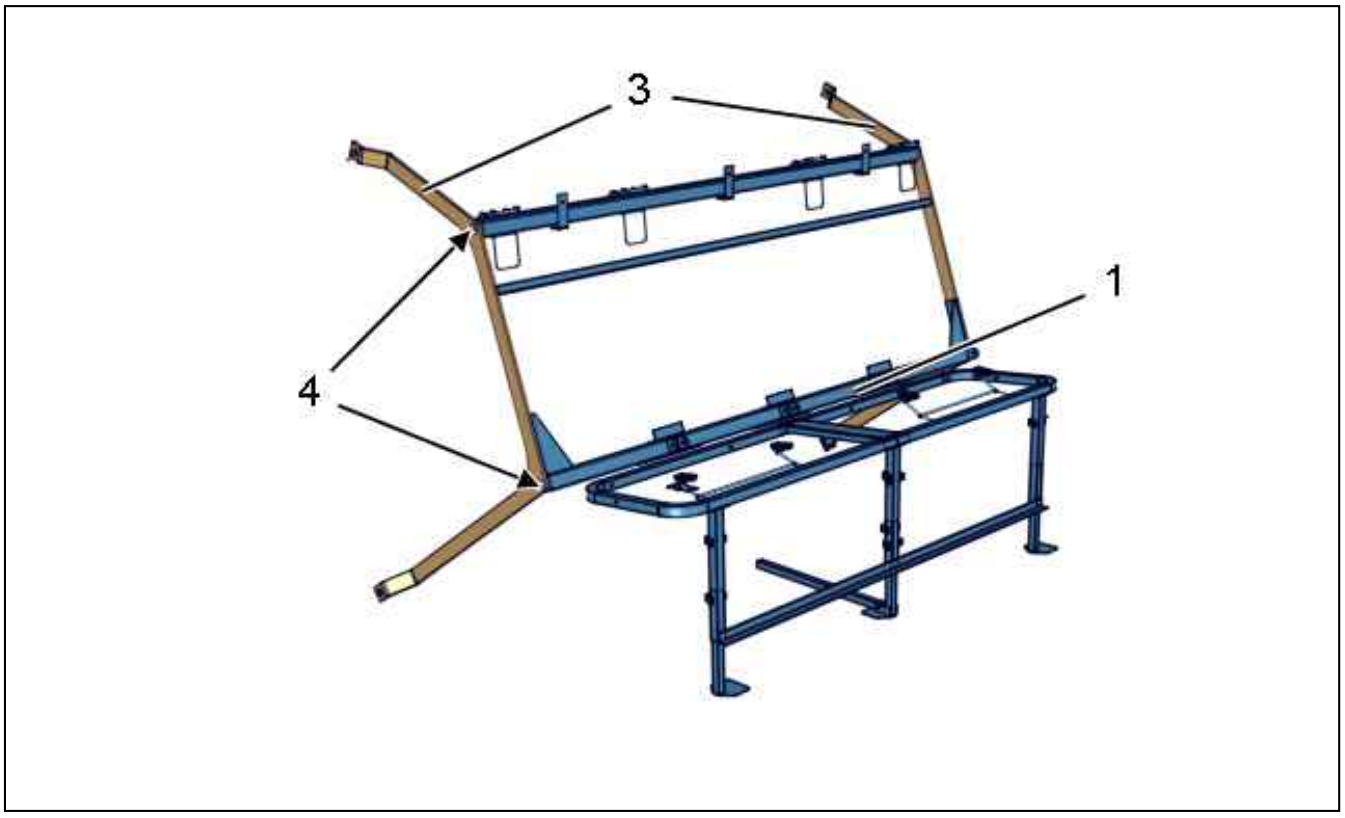

Figure : C5GM1DDD

Remove :

- The rear seat belt inertia reels
- The rear seatbelt stalks
- The bolts (4) (Symmetrical operations)
- The rear seat frame fixings (3)
- The rear seat frame (1)

4. Refitting

Proceed in the reverse order to removal.
Tighten the bolts (2), (4) to 5 m.daN .
Check all the equipment works.

REMOVING - REFITTING : REAR SEAT TRIMS (CREW CAB)

ESSENTIAL : Observe the safety and cleanliness recommendations .

1. Recommended tools

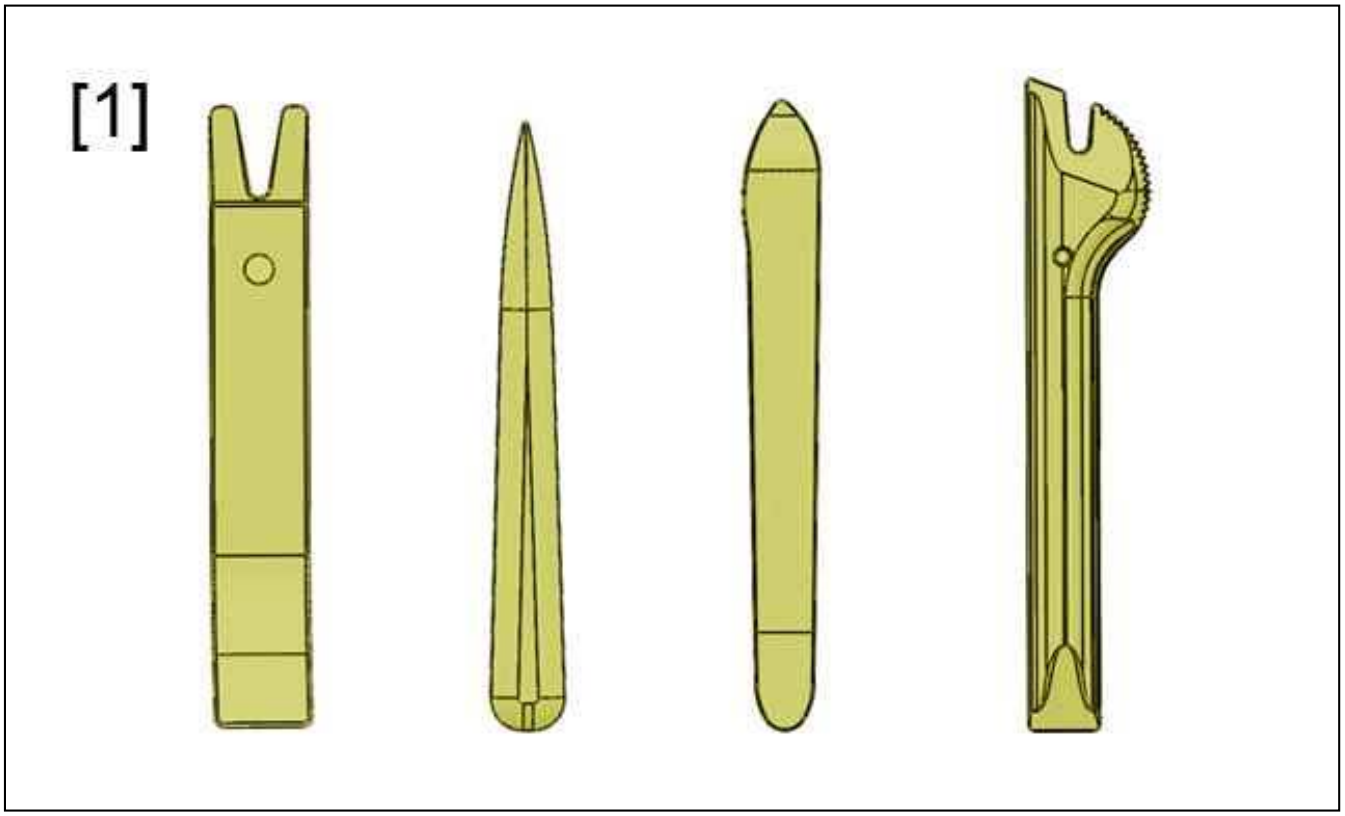

Figure : E5AP30WD

[1] Stripping tools (-).1350.

2. Removing

2.1. Side trim : Rear bench seat

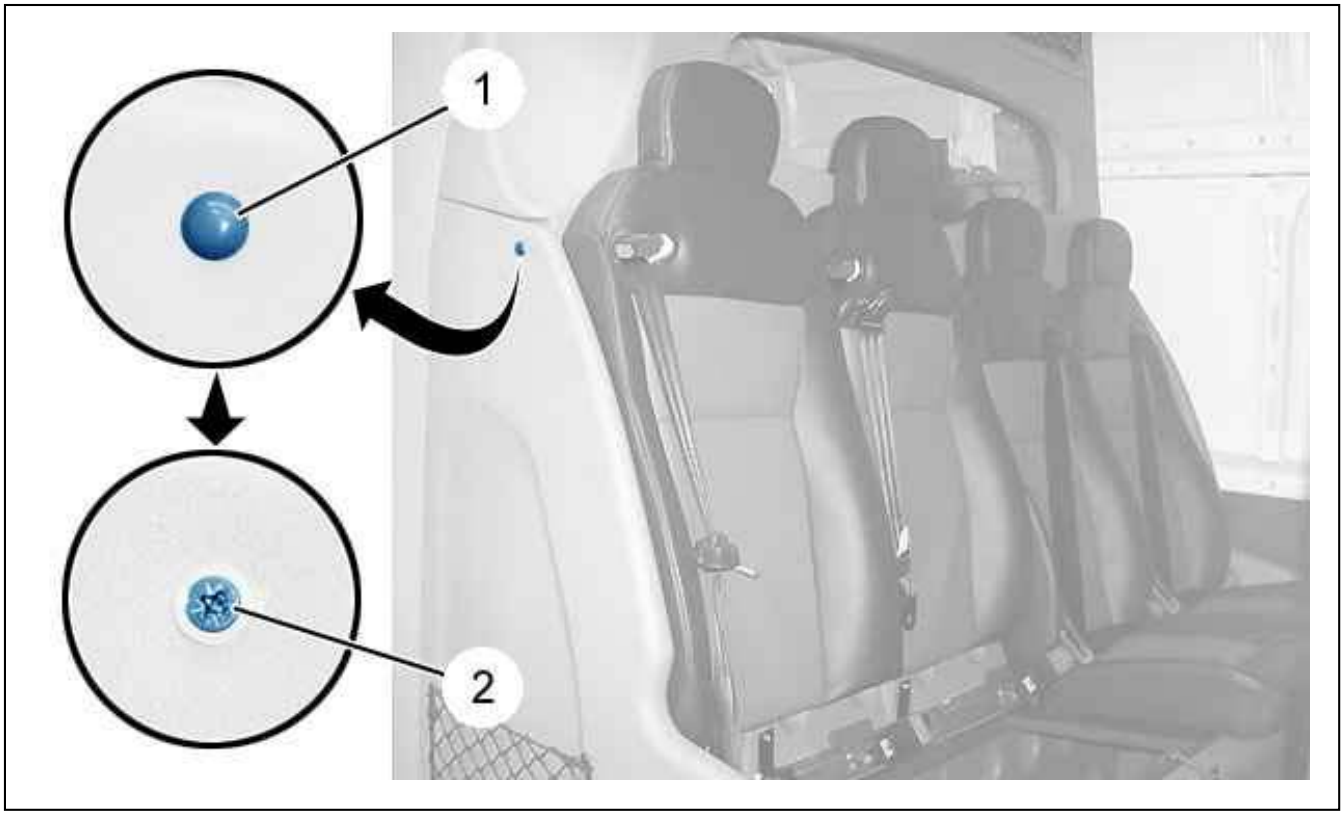

Figure : C5GM1B0D

Remove :

- The rear benchseat base
- The cover (1) ; Using tool [1]
- The (2) bolt

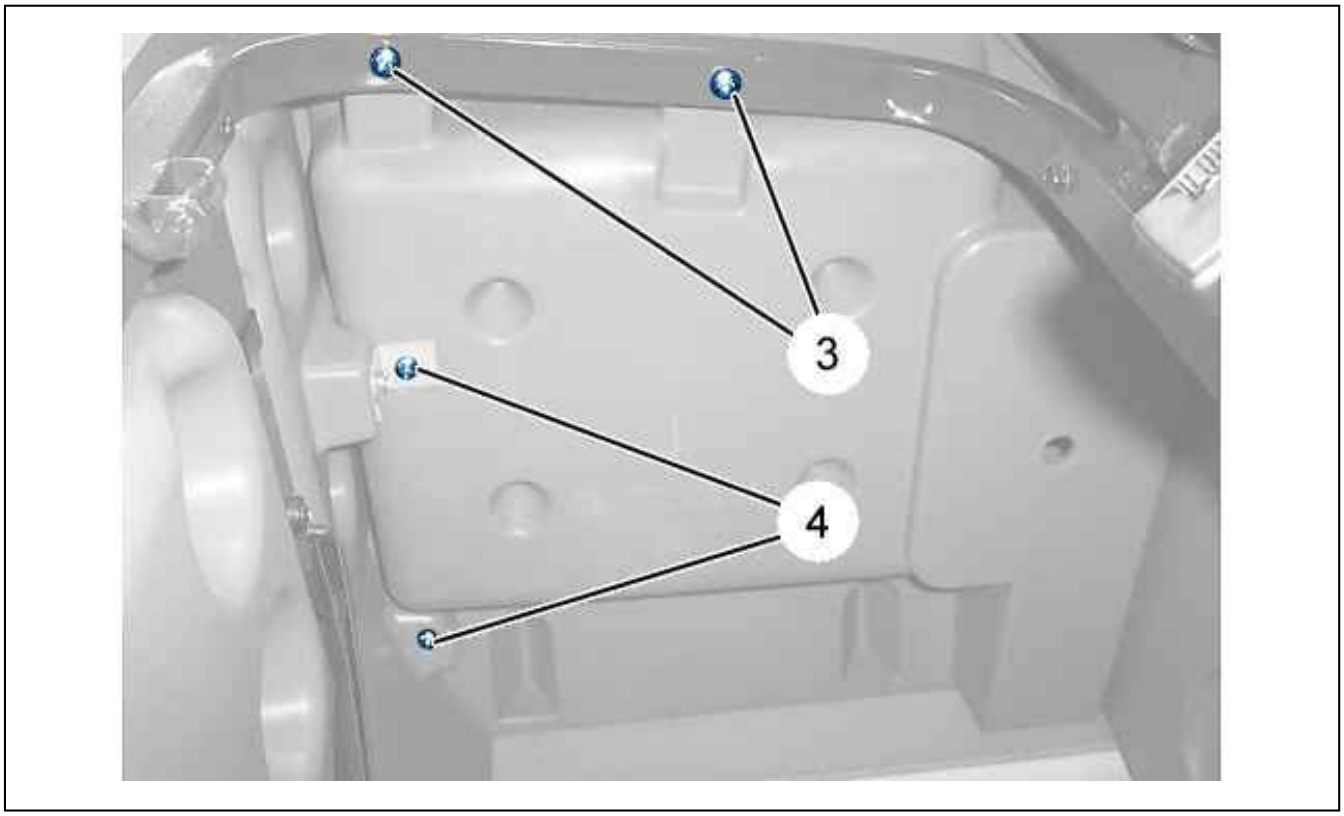

Figure : C5GM1B1D

Remove : The bolts (3), (4).
Remove the rear benchseat backrest .

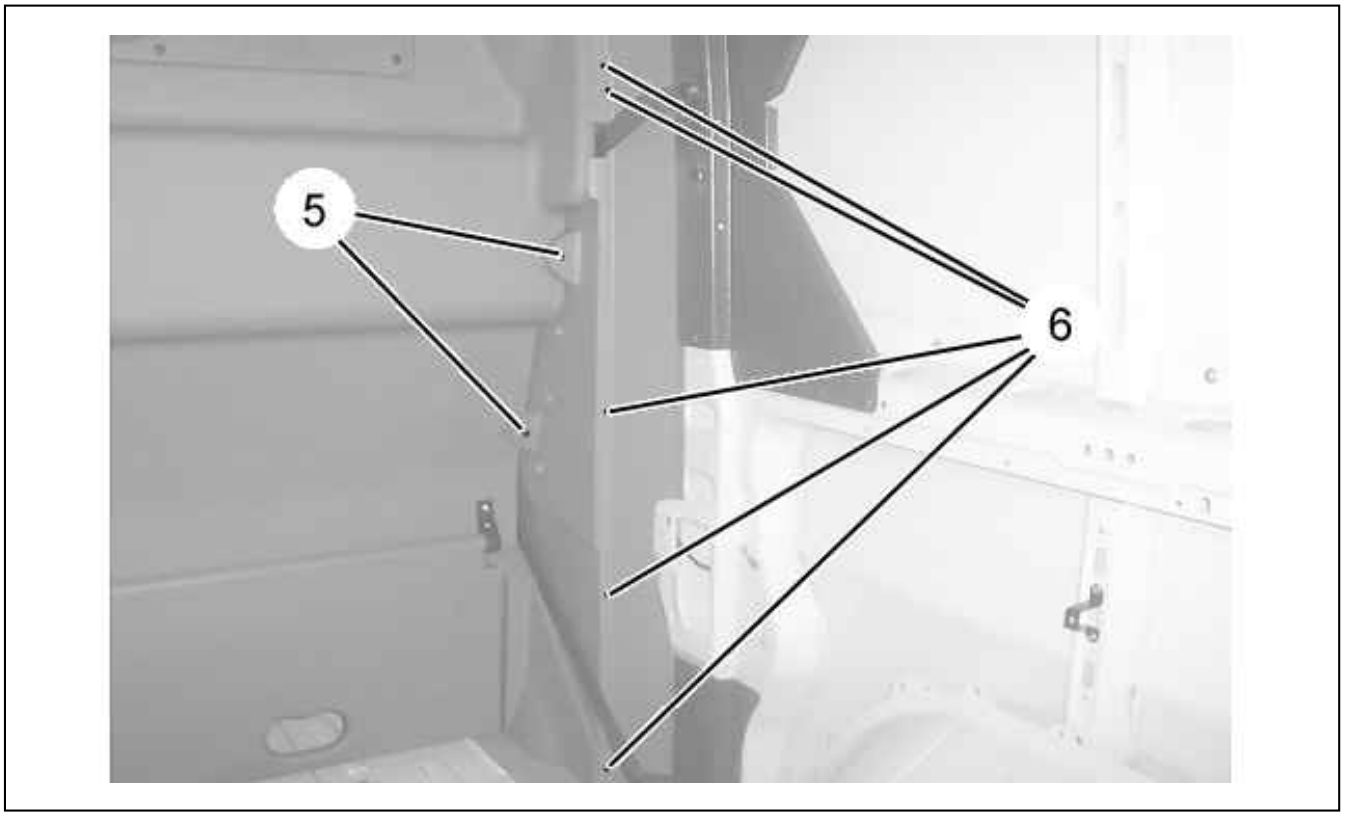

Figure : C5GM1B2D

Remove the bolts (5), (6).



Figure : C5GM1B3D

Remove : The rear bench side trim (7) (Outwards).

2.2. Lower trim : Rear bench seat

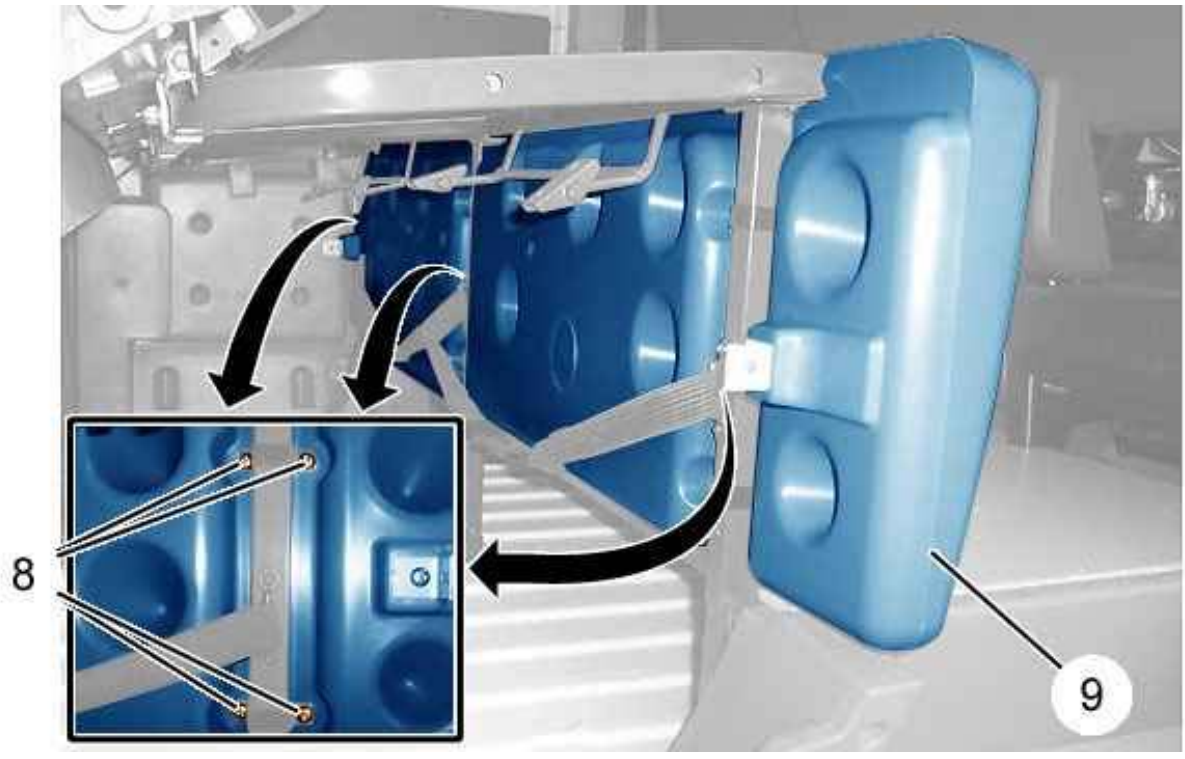

Figure : C5GM1B4D

Remove :

- The bolts (8)
- The lower rear seat trim (9)

2.3. Lower access flap

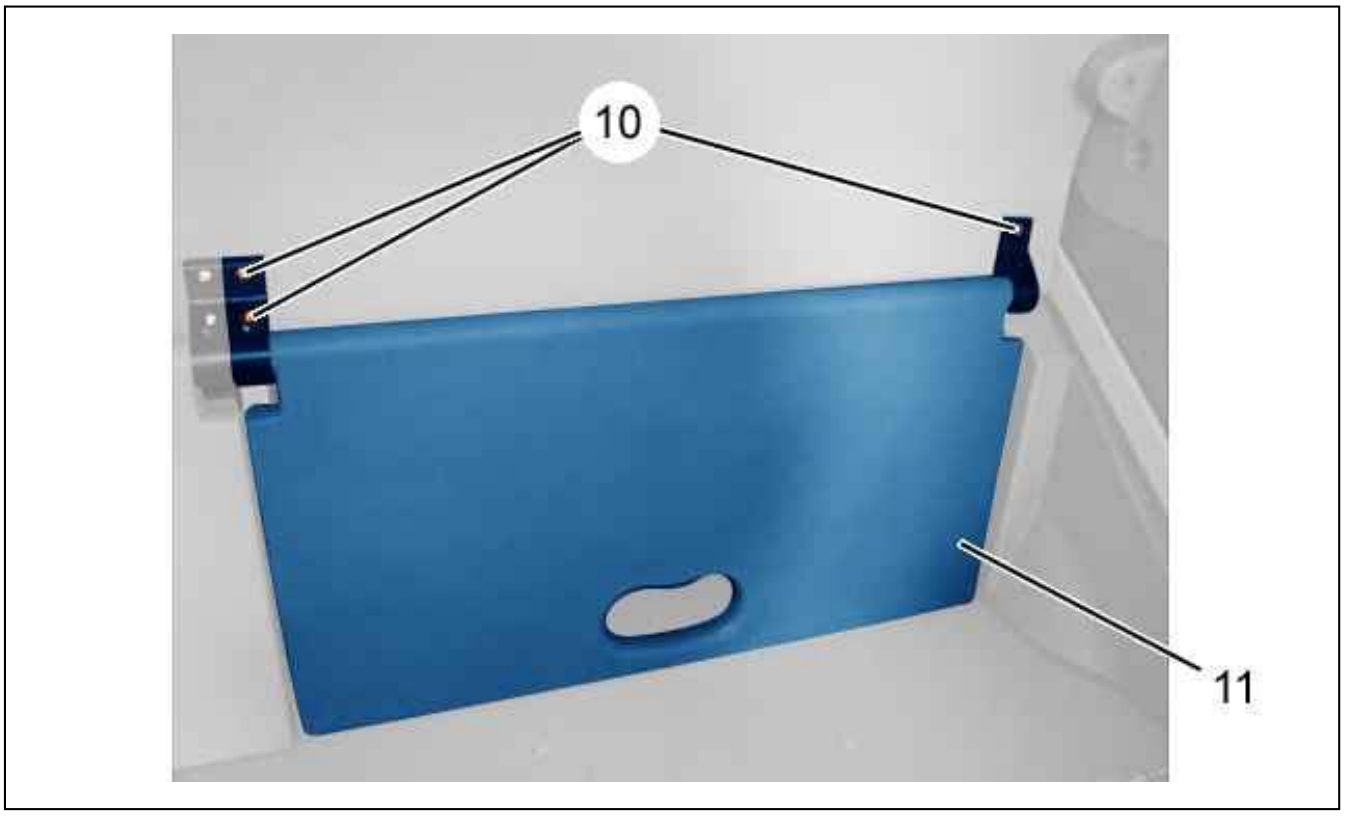

Figure : C5GM1B5D

Remove :

- The bolts (10)
- The lower access flap (11)

2.4. Upper extension : Rear bench seat

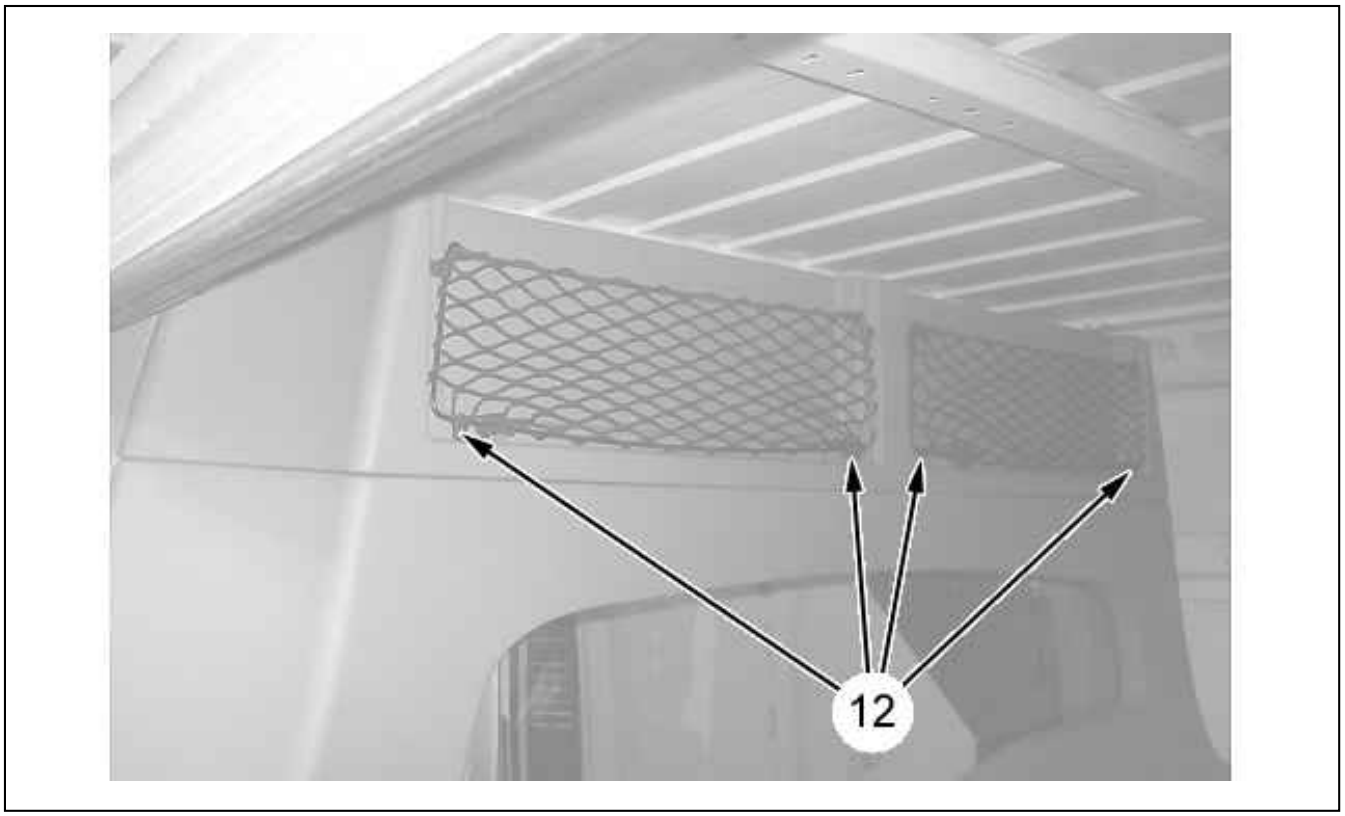

Figure : C5GM1B6D

Remove the bolts (12).

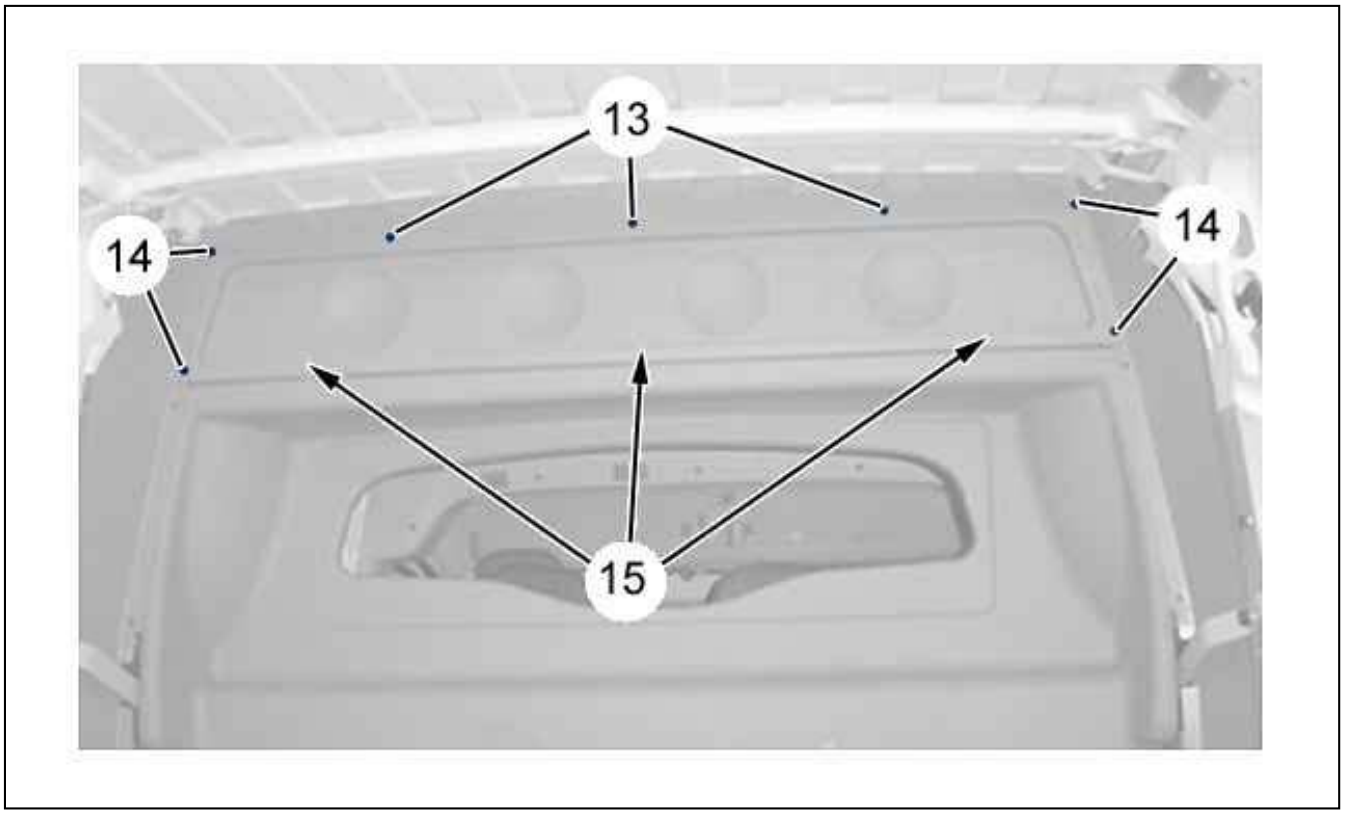

Figure : C5GM1B7D

Remove the bolts (13), (15).
Drift out the rivet studs before drilling out.

Drill the rivet heads (14) with a 6 mm dia. drill.
Drill the bodies of the remaining rivets.

N.B. : Vacuum to extract the rivet waste .

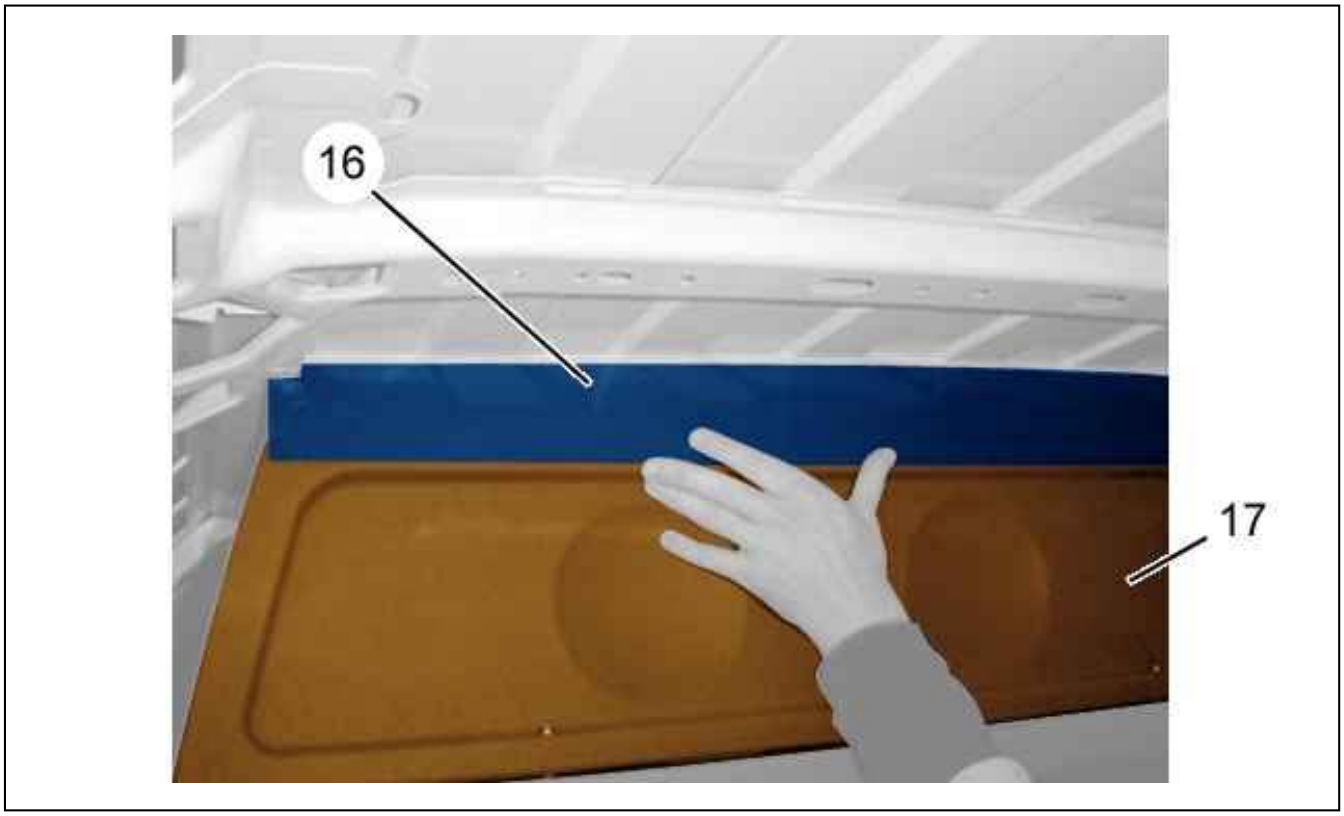

Figure : C5GM1B8D

Remove :

- The closing panel (16) of the other extension of the rear seat
- The upper extension (17) of the rear seat

2.5. Rear seat partition

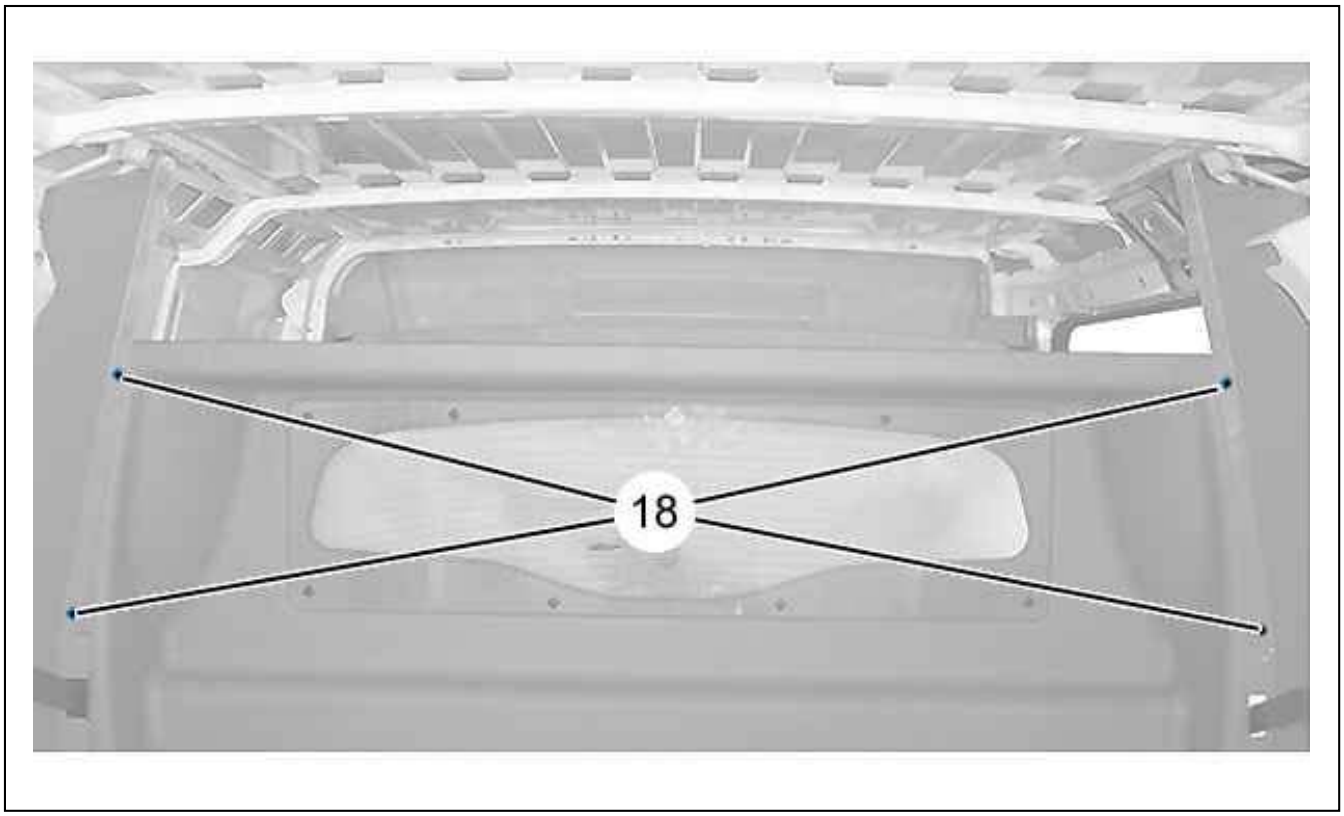

Figure : C5GM1B9D

Remove the bolts (18).

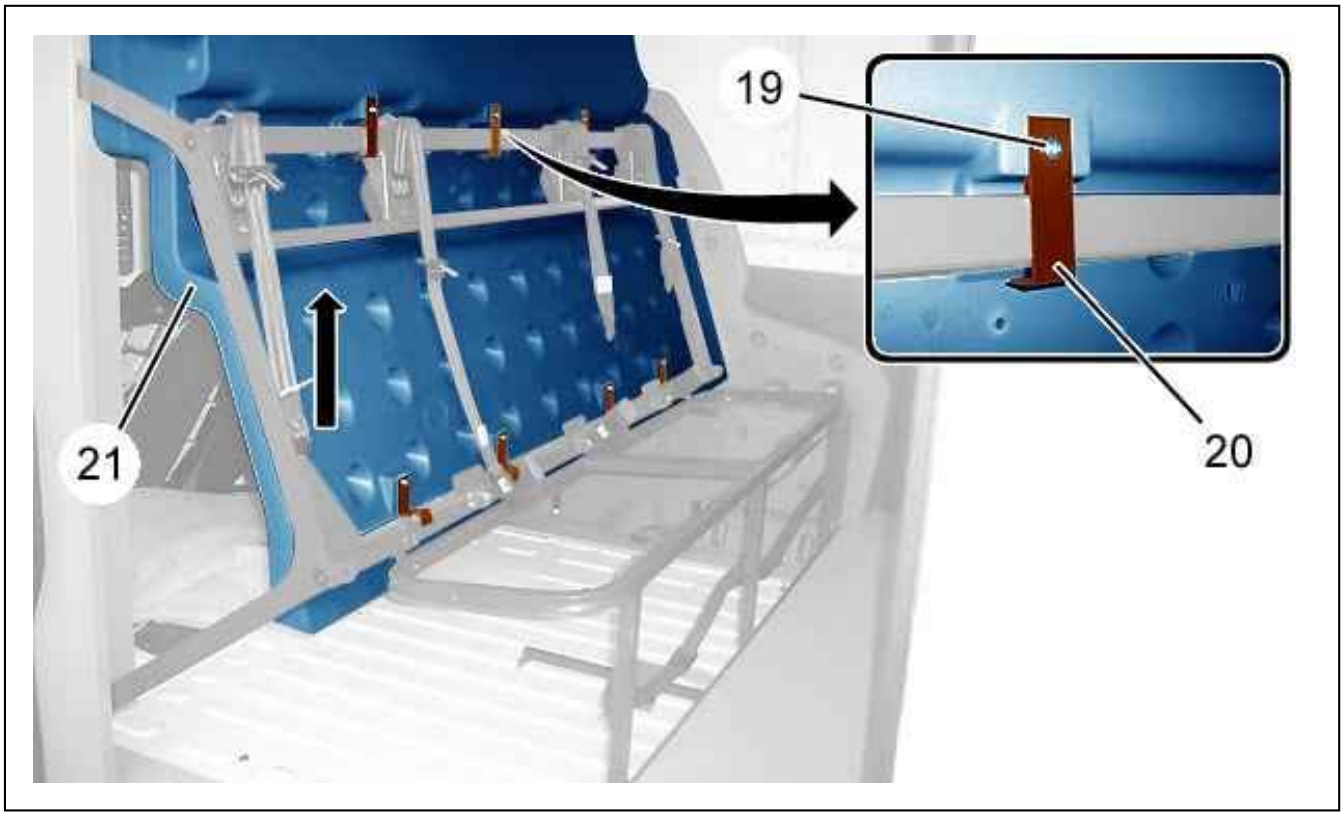

Figure : C5GM1BAD

Remove :

- The bolts (19)

- The mountings (20)

Detach : The cab partition (21) (following the arrow).

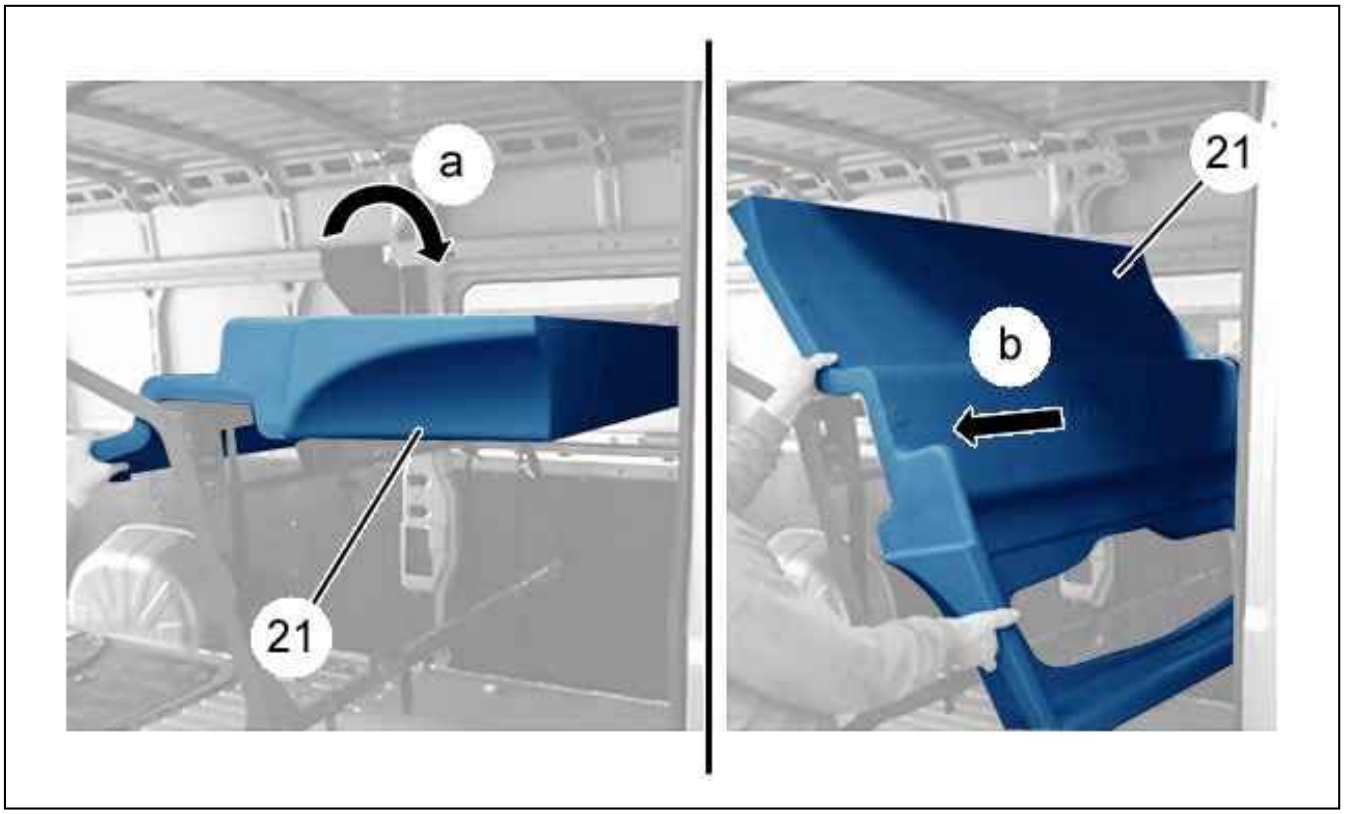

Figure : C5GM1BBD

CAUTION : Two people are required to perform the following operation.

Rotate the cab partition (21) (as "a") (In the direction of the arrow).
Remove : The cab partition (21) (as "b") (In the direction of the arrow).

2.6. False floor (Before) - False floor trim

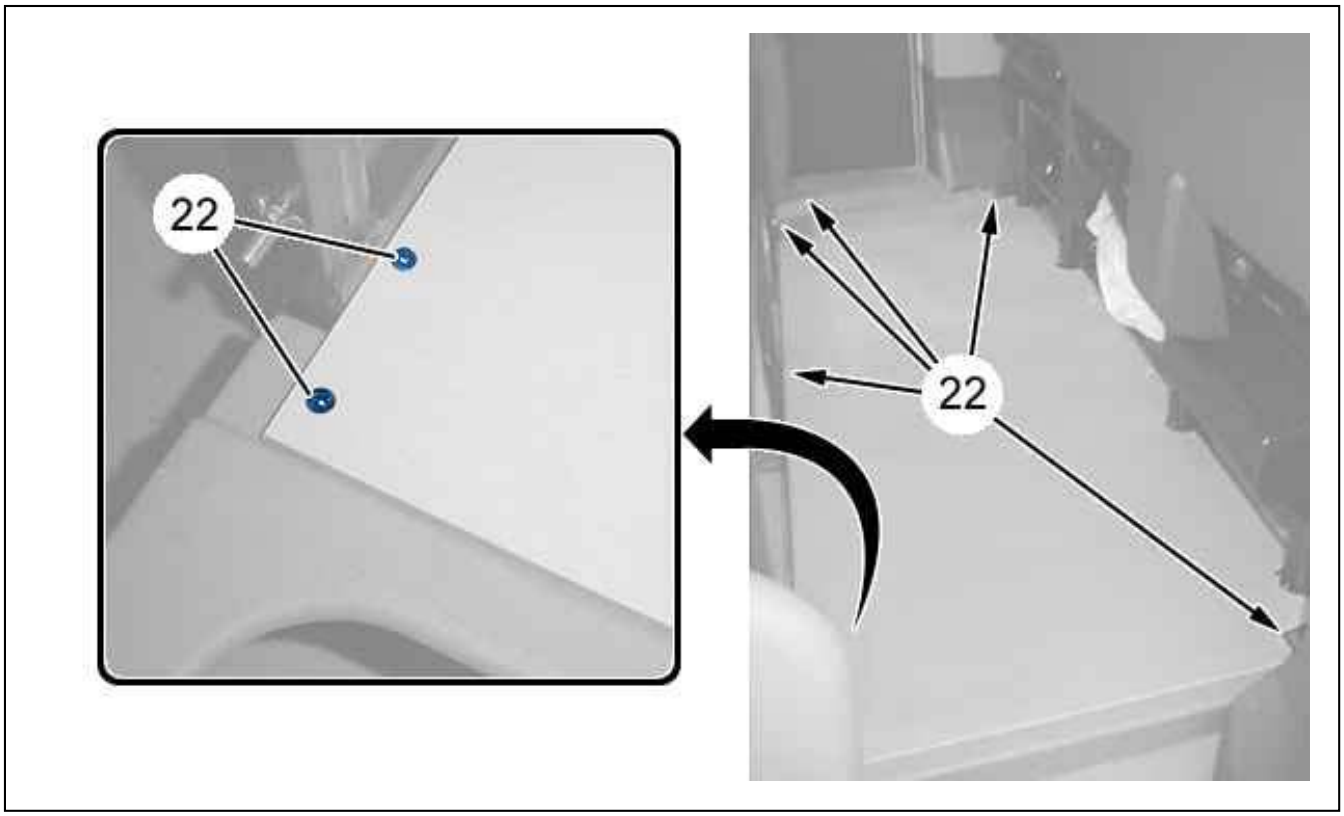

Figure : C5GM1BCD

Remove the bolts (22).

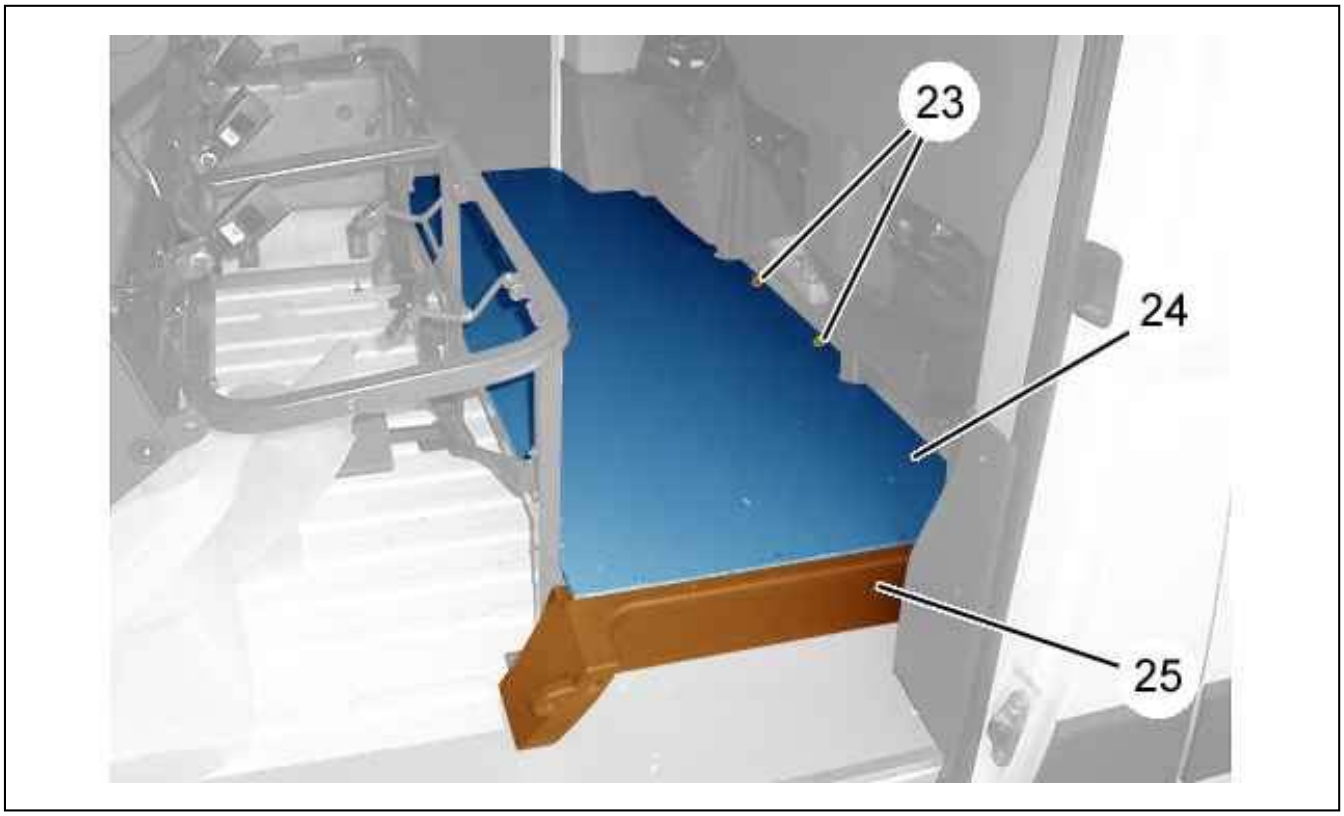

Figure : C5GM1BDD

Remove :

- The bolts (23)

- The false floor (24)
- The false floor trim (25)

3. Refitting

Proceed in the reverse order to removal.
Check all the equipment works.

REMOVING - REFITTING : REAR BUMPER CROSSMEMBER

1. Removing

ESSENTIAL : Deactivate the pneumatic suspension before lifting the vehicle (2 or 4 post lift, workshop jack or vehicle jack).

Remove the rear bumper (see the relevant operation).

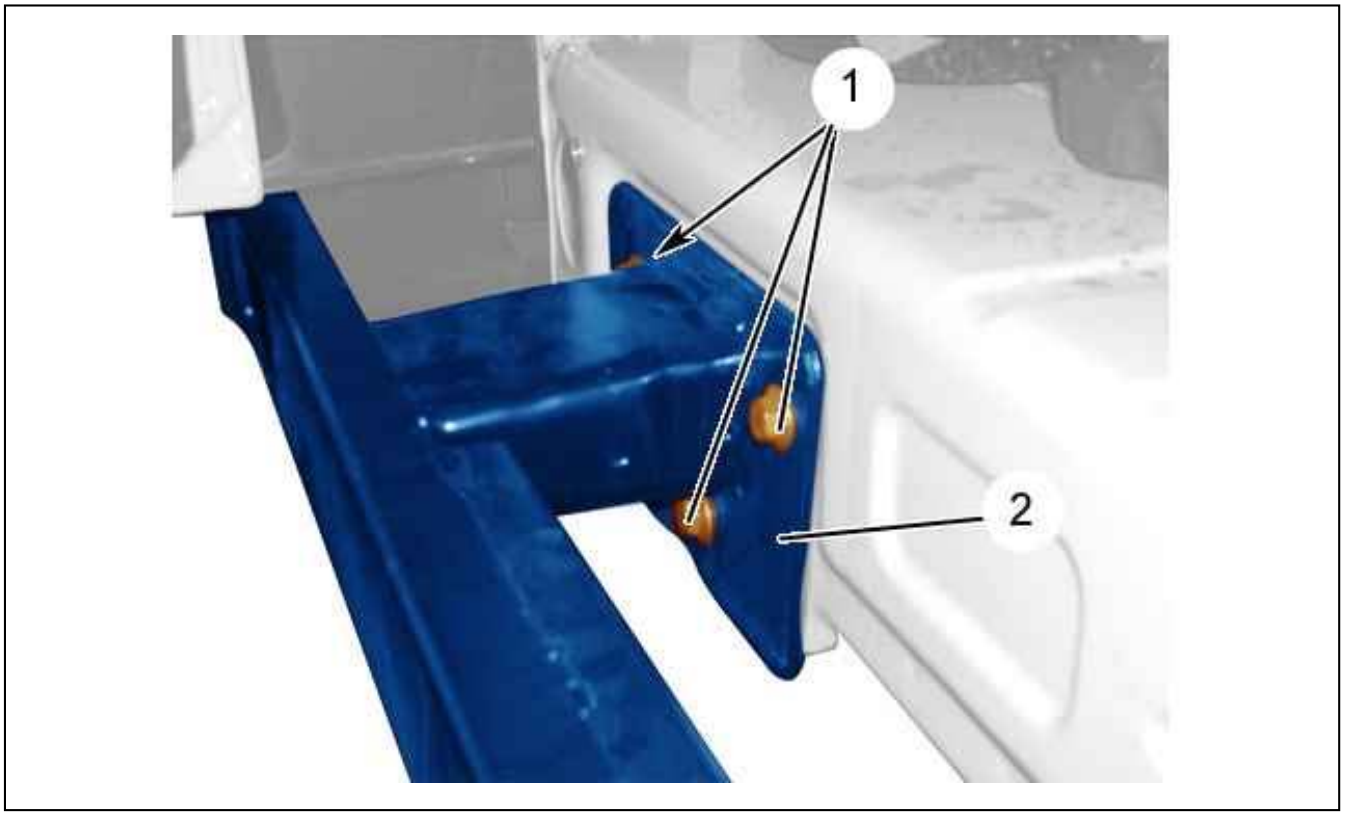

Figure : C4BP1SLD

Remove the bolts (1).
Proceed in the same way for the other side.
Remove the rear bumper crossmember (2).

2. Refitting

Proceed in the reverse order to removal.
Tighten the bolts (1) to 2,5 ± 0,025 daN.m.

REMOVING - REFITTING : REAR BUMPER

1. Recommended tools

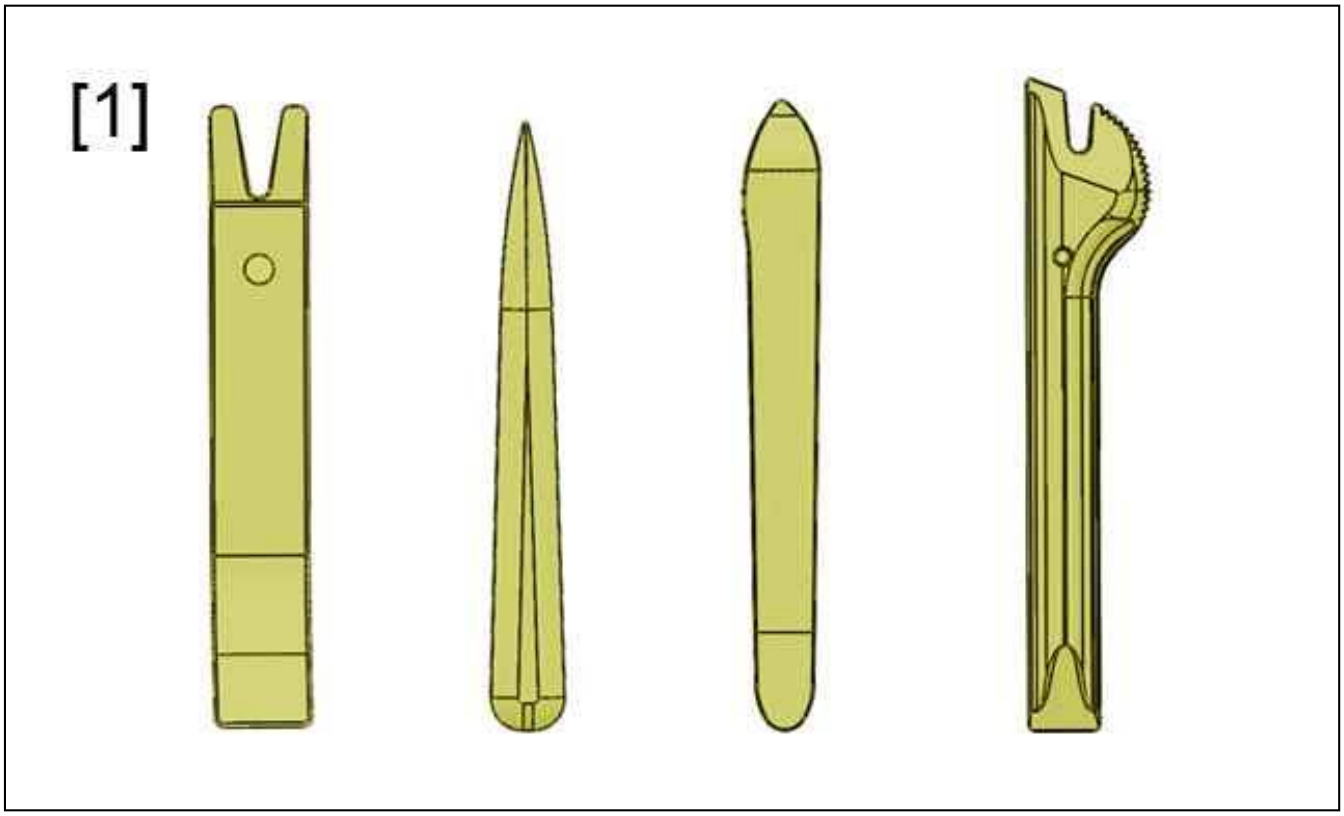

Figure : E5AP30WD

[1] Stripping tool (-).1350-ZZ.

2. Removing

ESSENTIAL : Deactivate the pneumatic suspension before lifting the vehicle (2 or 4 post lift, workshop jack or vehicle jack).

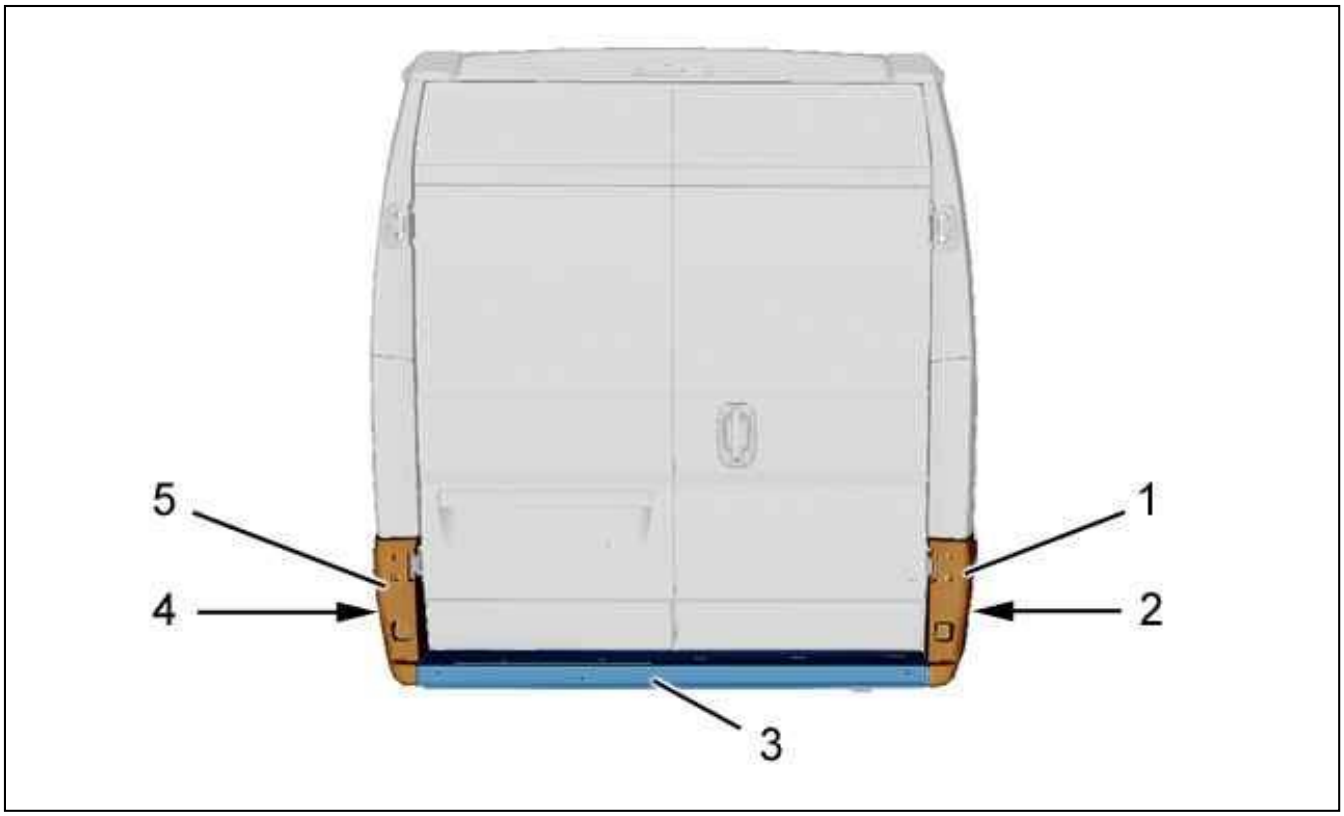

Figure : C4BP1SQD

The rear bumper consists of 5 parts :

- The right-hand bumper (1)
- The right-hand side bumper (2)
- The central bumper (3)
- The left-hand side bumper (4)
- The left-hand bumper (5)

2.1. Side bumper

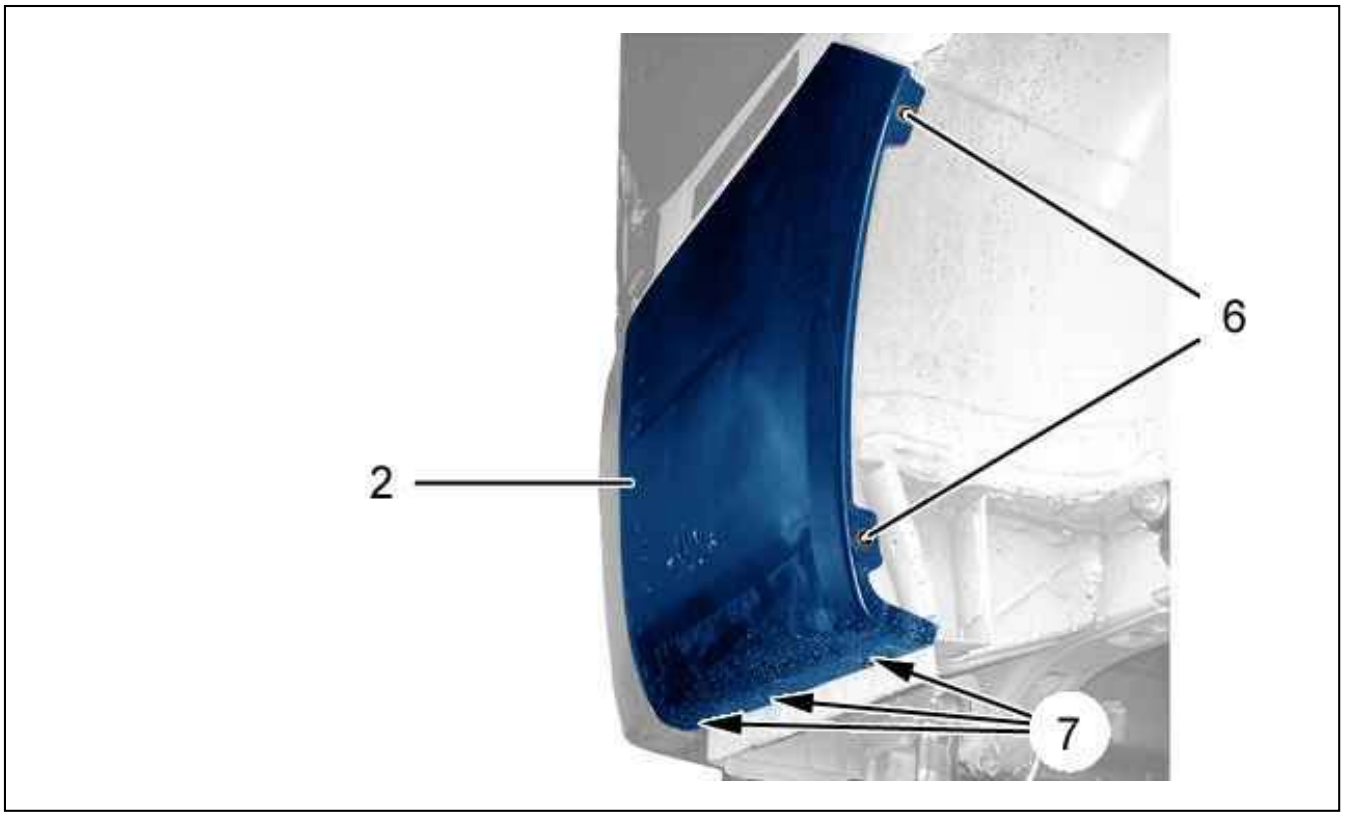

Figure : C4CP1WUD

Remove :

- The bolts (6), (7)
- The right-hand side bumper (2)

Unclip the right-hand side bumper (2) clips ; Using tool [1].
Repeat the operation on the opposite side.

N.B. : Prepare for the replacement of the clips .

2.2. Central bumper

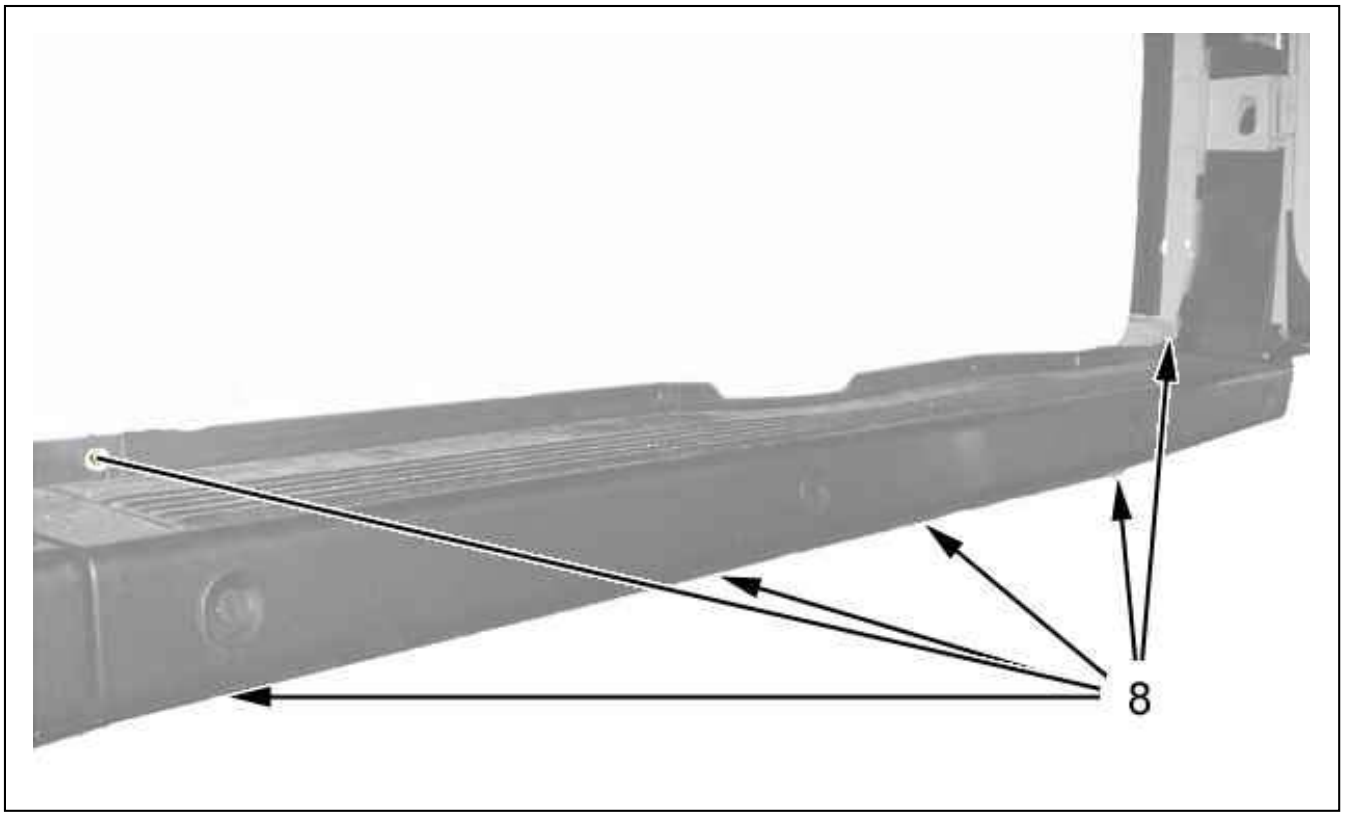

Figure : C4BP1SRD

Remove the bolts (8).

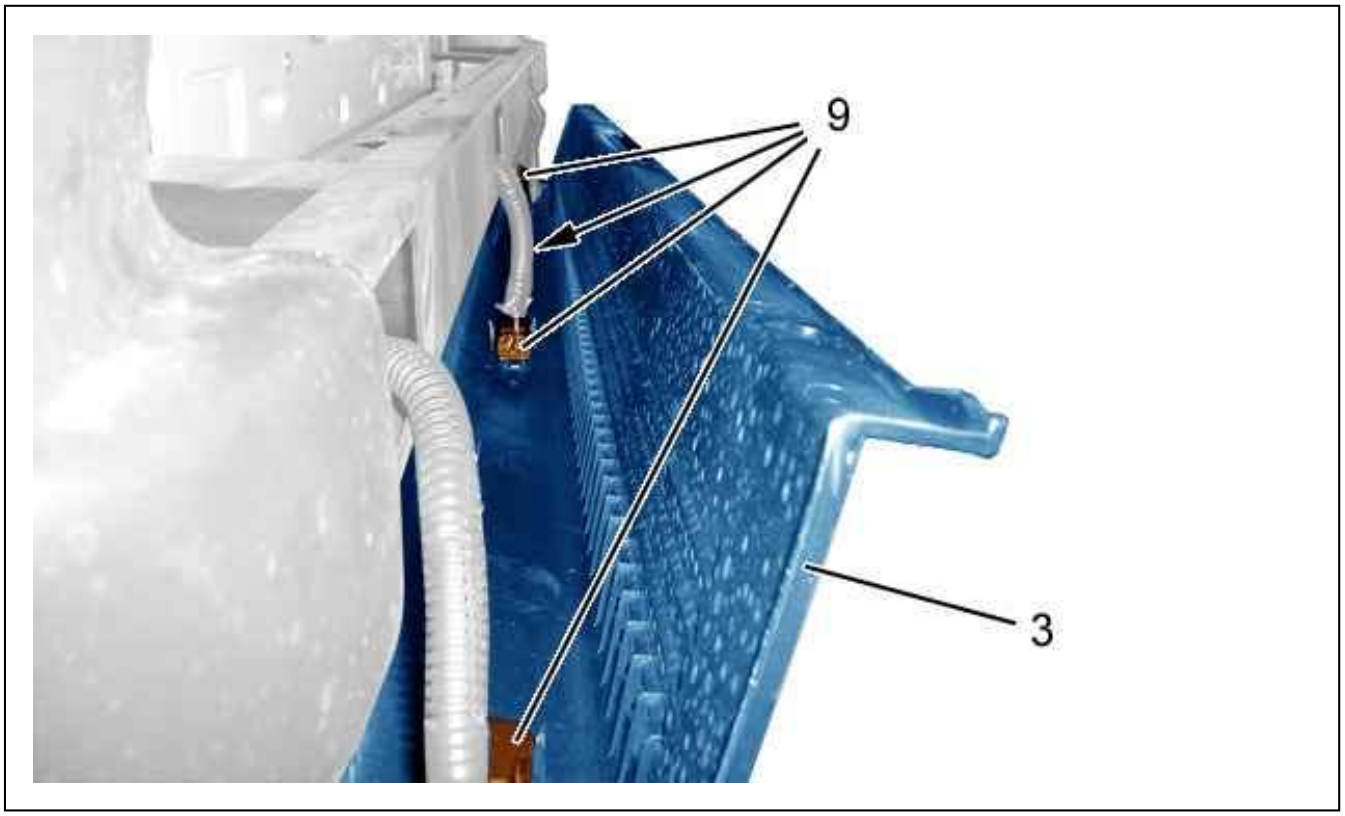

Figure : C4BP1SSD

Unclip the parking assistance sensors (9).
Remove :

- The tail lights (see the relevant operation)
- The central bumper (3)

2.3. The right-hand bumper



Figure : C4BP1STD

Remove the bolts (10).
Repeat the operation on the opposite side.

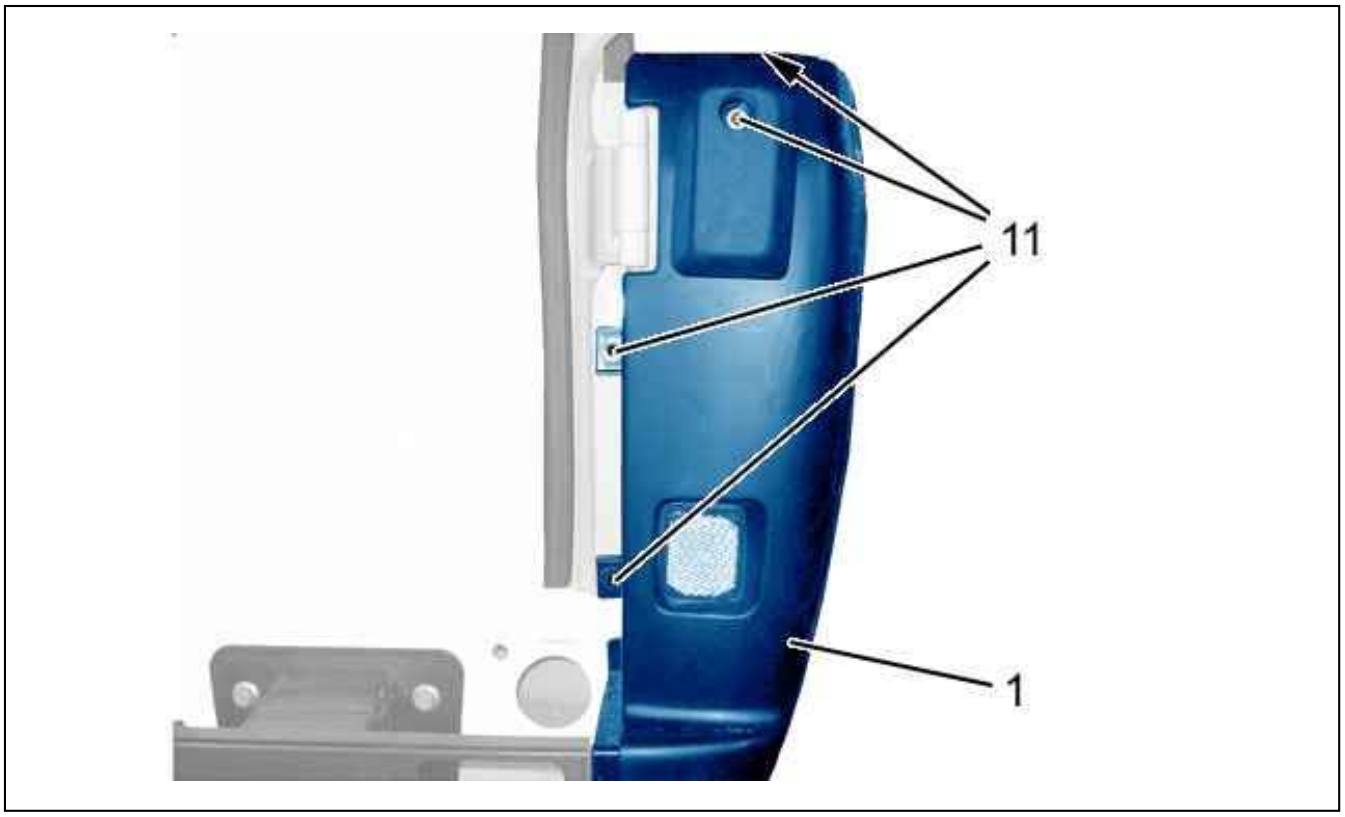

Figure : C4BP1SUD

Remove :

- The bolts (11)
- The right-hand bumper (1)

Repeat the operation on the opposite side.

3. Refitting

Proceed in the reverse order to removal.
Check the operation of the electrical controls.

IDENTIFICATION : ANTI-CHIP COMPOUND

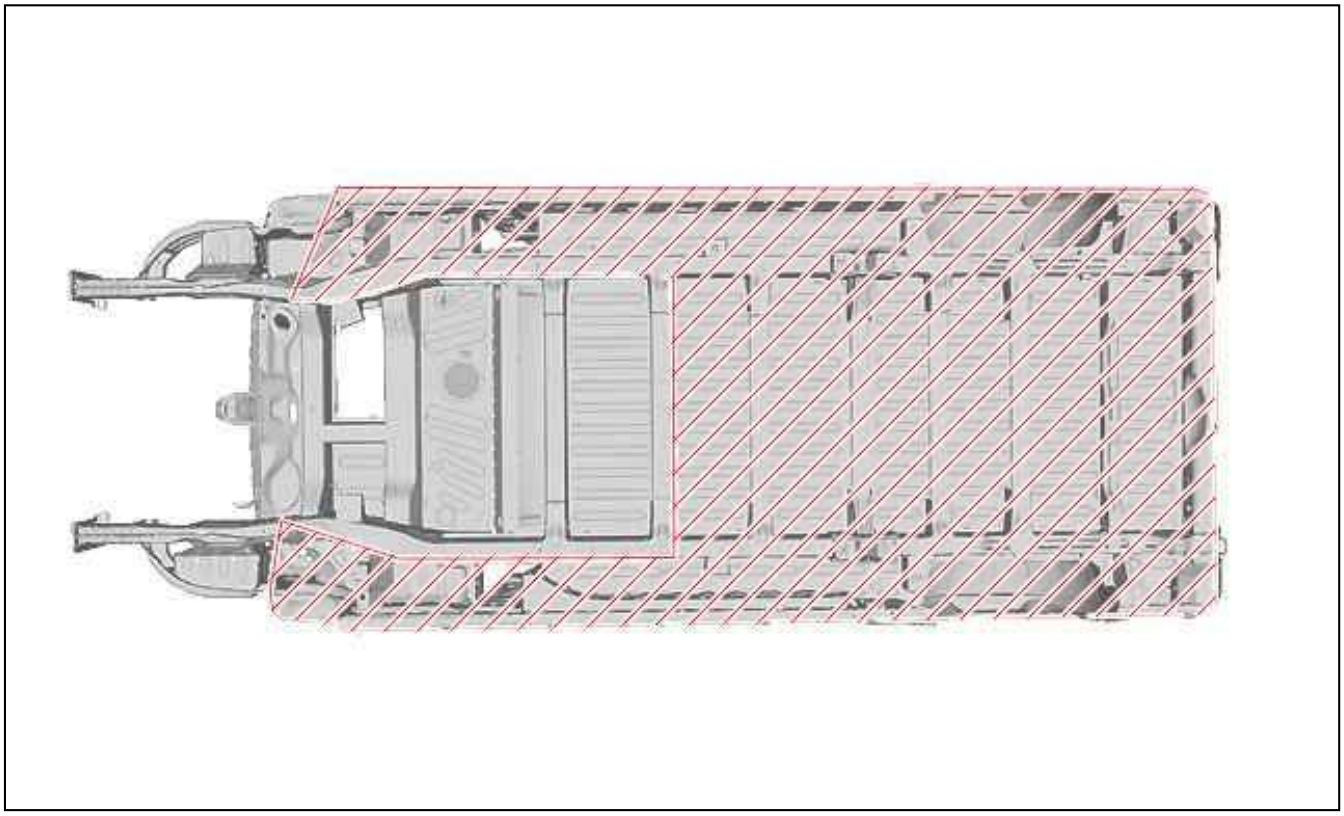

Figure : C4EP160D

Figure 1.
Underbody.
Apply an anti-chip layer index C4 (see the relevant operation).

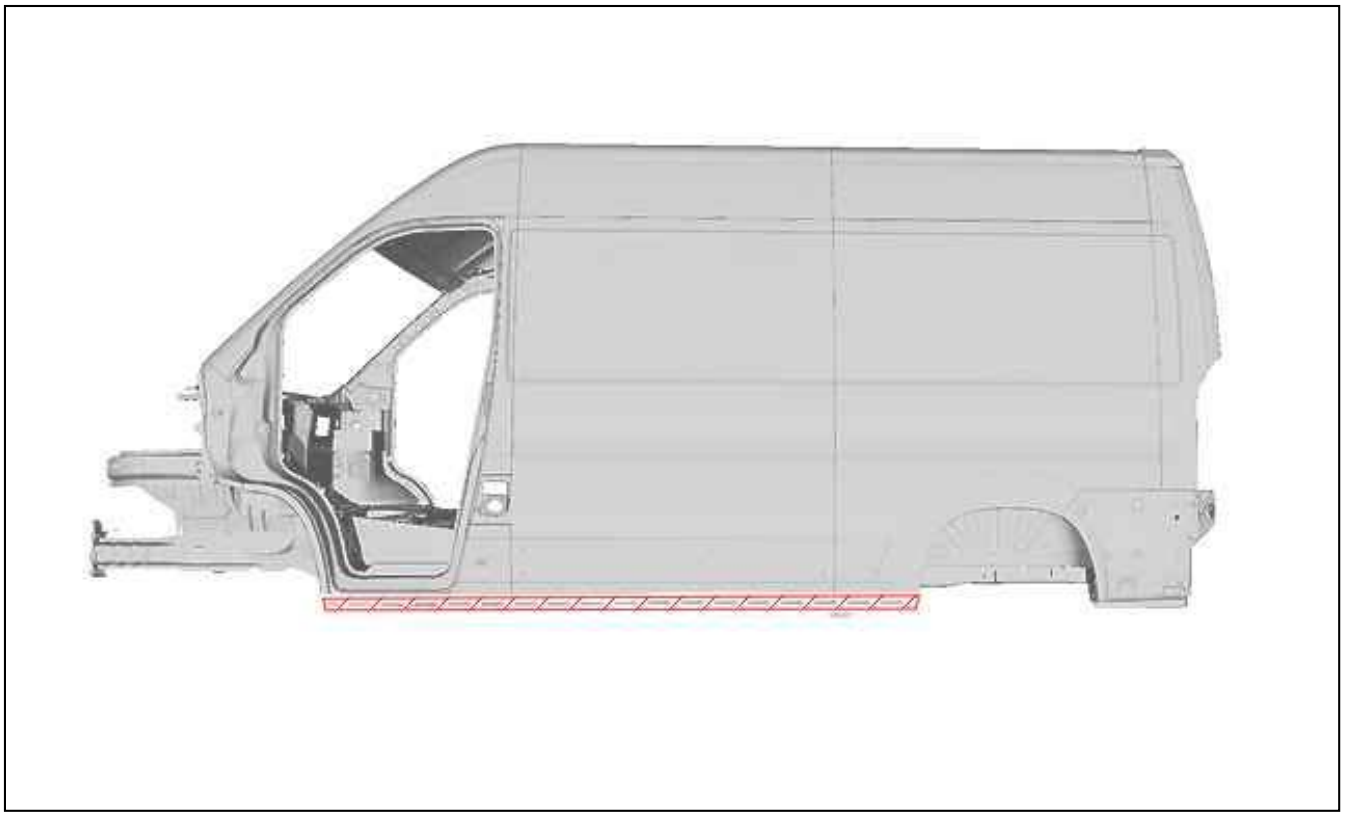

Figure : C4CP1S4D

Figure 2.
Side panel .
Apply an anti-chip layer index C4 (see the relevant operation).

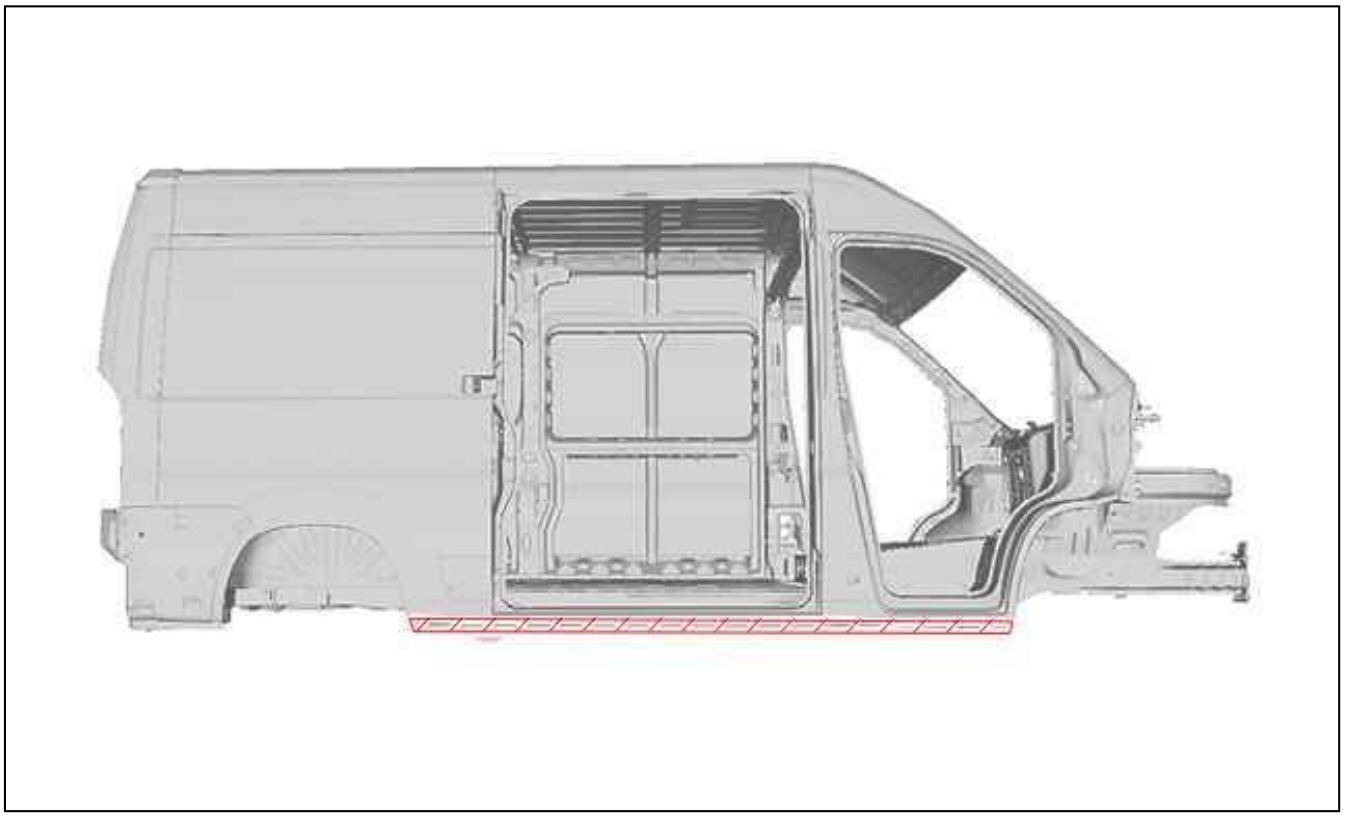

Figure : C4CP1S5D

Figure 3.
Side panel .
Apply an anti-chip layer index C4 (see the relevant operation).

LOCATION : COLD STAMPING OF THE SERIAL NUMBER (VIN)

ESSENTIAL : Observe the safety and cleanliness recommendations .

ESSENTIAL : Observe the precautions to be taken for the pre-tensioning components .

ESSENTIAL : Before any work on the structure of a vehicle with on board electric energy (electric vehicle/hybrid vehicle), the vehicle must be isolated by an authorised technician. Only those personnel that have received training specific to electric or hybrid vehicles are qualified to work on the vehicle's electrical system.

1. Characteristics of the serial number

The regulation size of the punches for cold stamping is 7 mm.
The serial number consists of 17 characters.
The serial number is always situated on the right-hand section of the vehicle.
Depending on the vehicle, the serial number may be stamped on 1 or 2 lines.

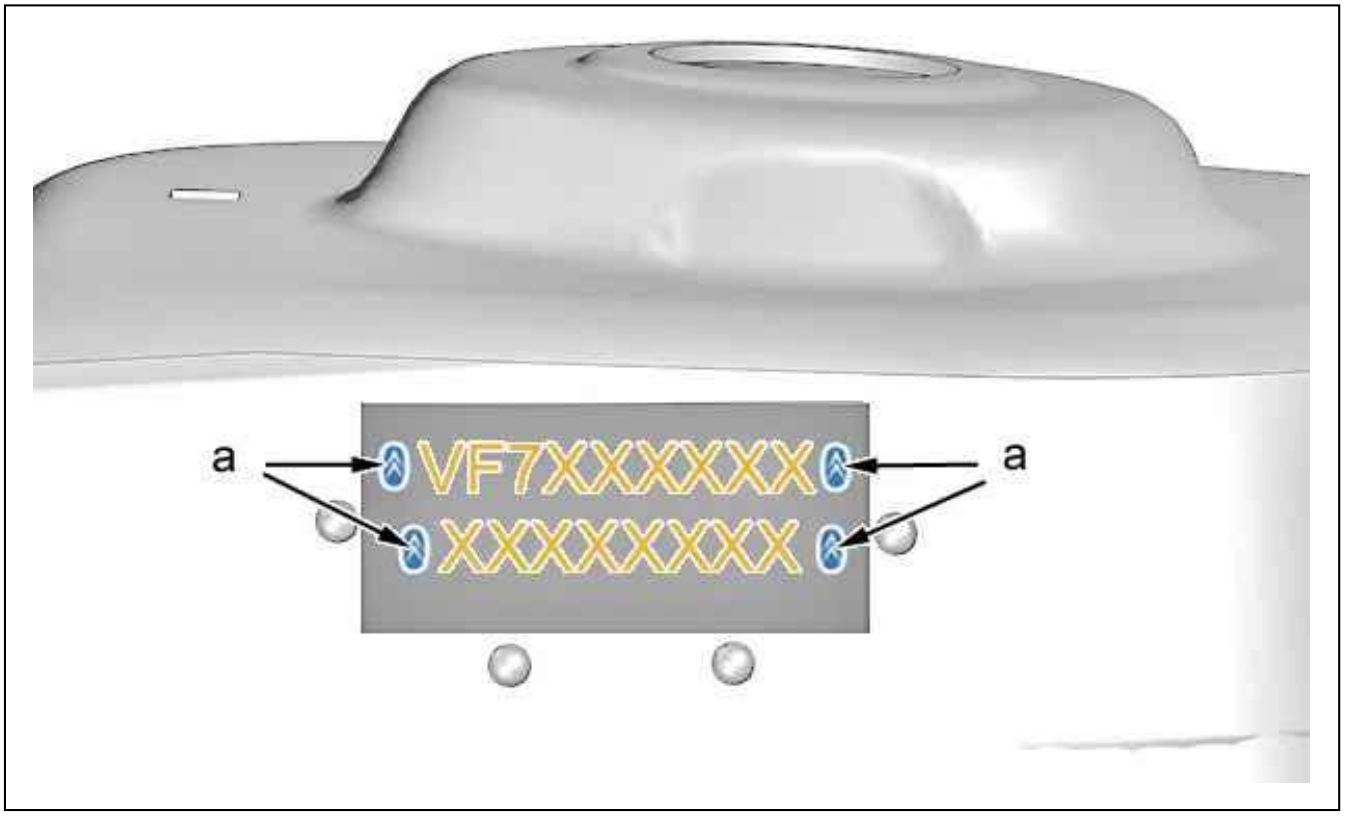

Figure : C4EB0QMD

"a" Original punch.
Each line forming a serial number must have a non alphanumeric character "a" at each end.

2. Location of the original cold stampings

Reference	Vehicle	Location

(A)	BERLINGO I BERLINGO II C5 China C5 phase I (Restyled) SYNERGIE DISPATCH I	RH front wing inner panel
(B)	C4 phase II DS4	Front right suspension mounting (Wing side)
(C)	C6	Front right suspension mounting (Engine side)
(D)		Rear screen lower crossmember
(E)	BERLINGO III C4 I C4 PICASSO DS5	Front right wheel arch upper section
(F)	C3 phase III DS3	Bulkhead flange right-hand section
(G)	C-Crosser XSARA PICASSO C5 phase II C3 phase I C3 phase I (Restyled) C2 C-Élysée	Bulkhead flange right-hand central section
(H)	C-Zero	Rear right hand wheel arch
(J)	NEMO	Front RH floor
(K)	C1	Front right seat crossmember
(L	JUMPER (all types)	Front right wheel arch
(M)	C3 PICASSO	Front right pillar
(N)		Load floor (Change of location only if the front right pillar is replaced)
(P)	C8 DISPATCH 3	Lower windscreen aperture

3. Location of the identification number (V.I.N) cold stamping zones

3.1. Front wing inner panel zone location

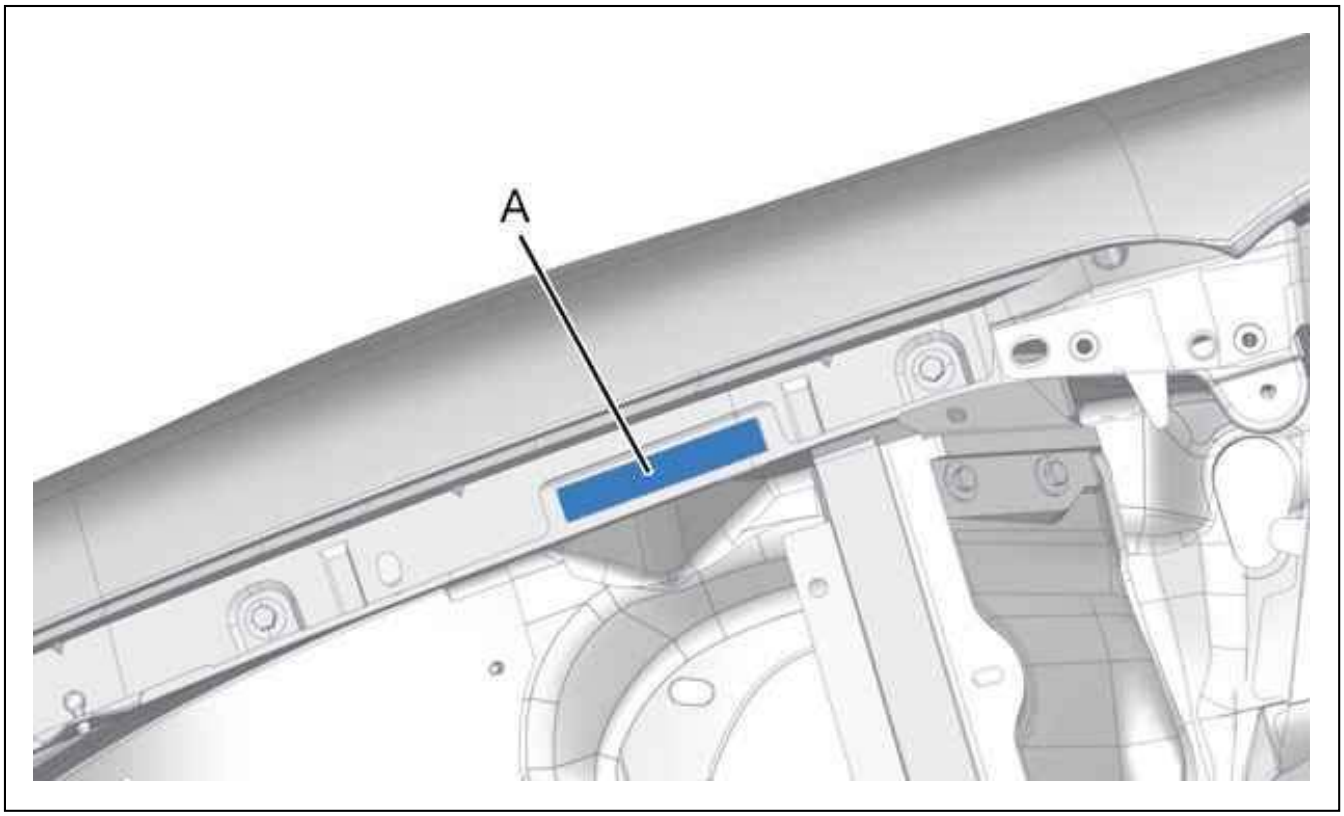

Figure : C4EB0QND

Reference	Original stamped part	vehicles	Number of lines
(A)	RH front wing inner panel	BERLINGO I BERLINGO II C5 China C5 phase I (Restyled) SYNERGIE RELAY III DISPATCH I	1

3.2. Front right suspension mounting zone location (Wing side)

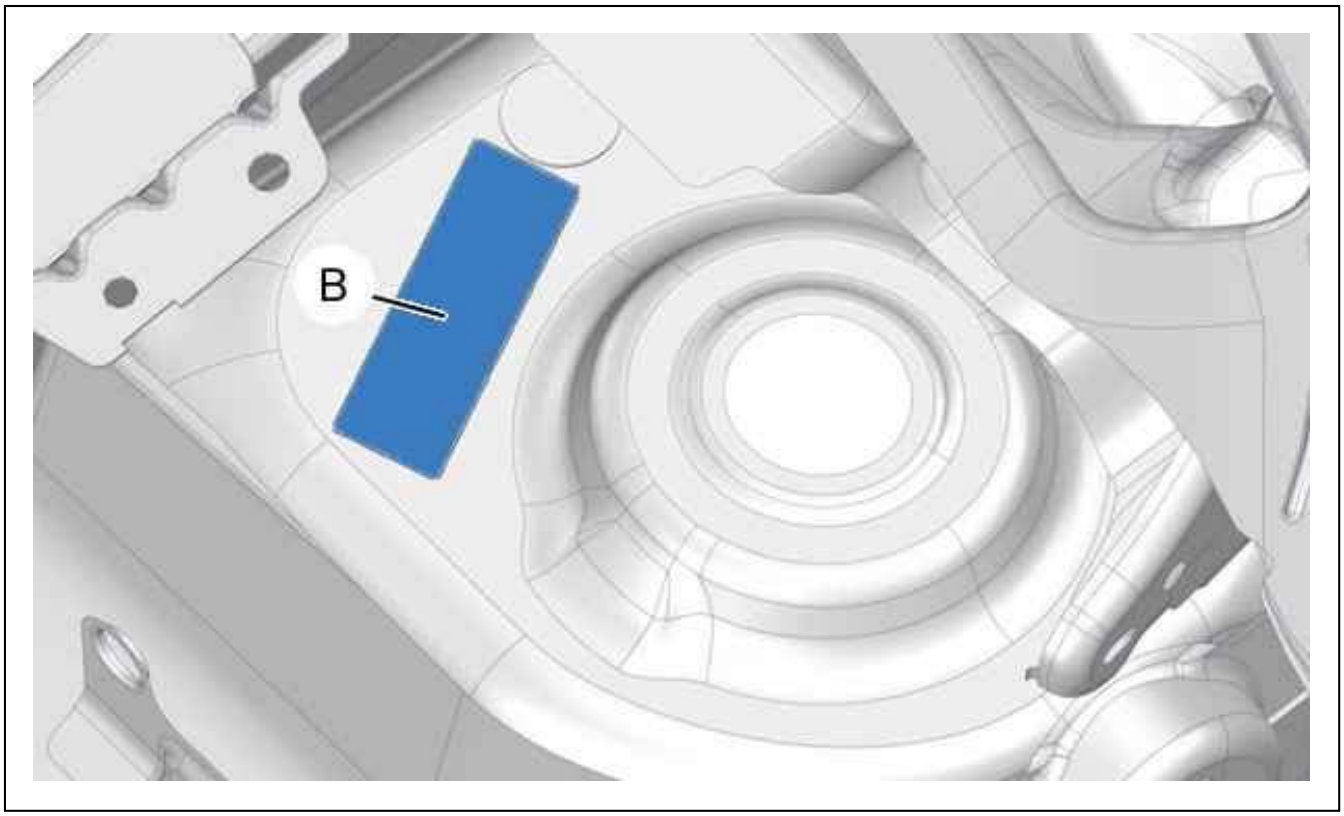

Figure : C4EB0QOD

Reference	Original stamped part	vehicles	Number of lines
(B)	Front right suspension mounting (Wing side)	C4 phase II DS4	2

3.3. Front right suspension mounting zone location (Engine side) - Rear screen lower crossmember

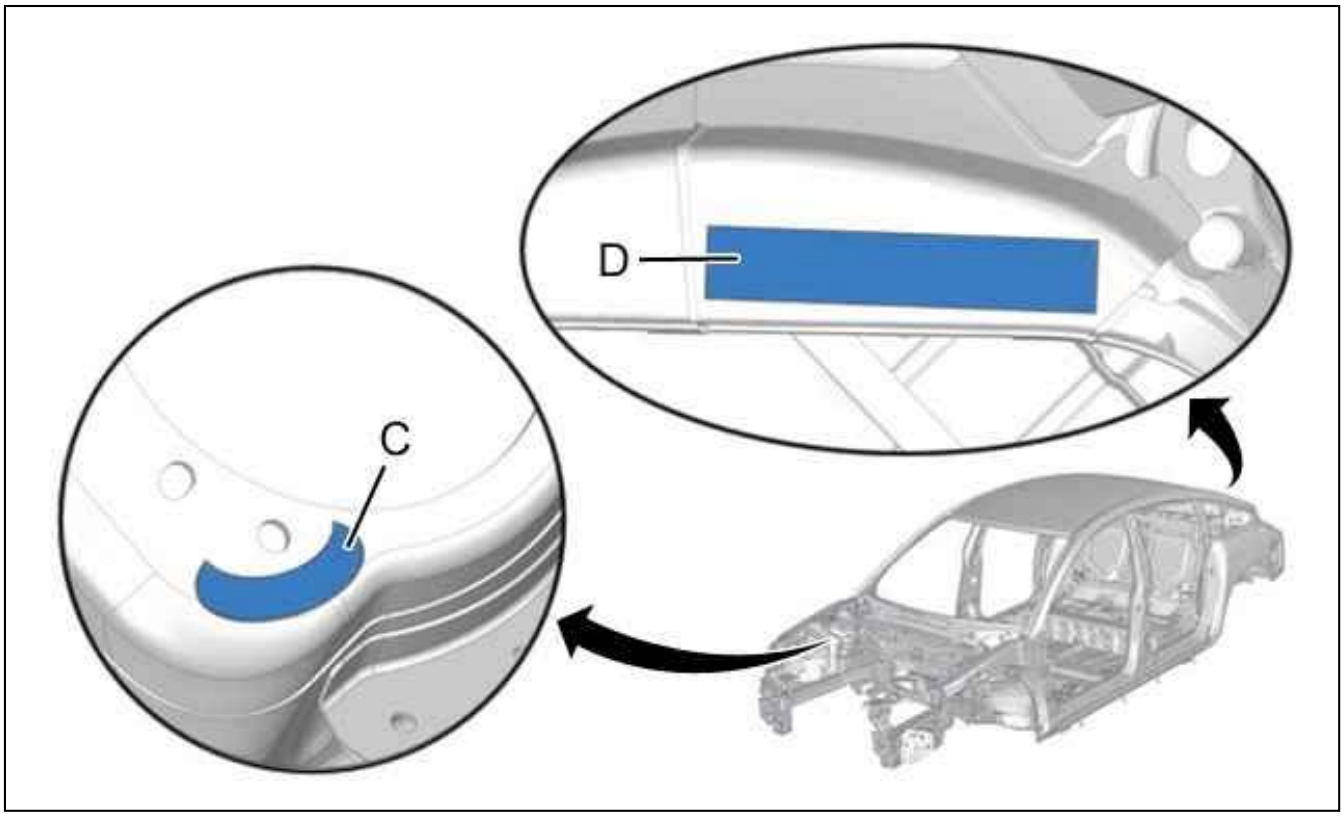

Figure : C4EB0QPD

Reference	Original stamped part	vehicles	Number of lines
(C)	Front right suspension mounting (Engine side)	C6	1
(D)	Rear screen lower crossmember		

3.4. Front right wheel arch upper section zone location

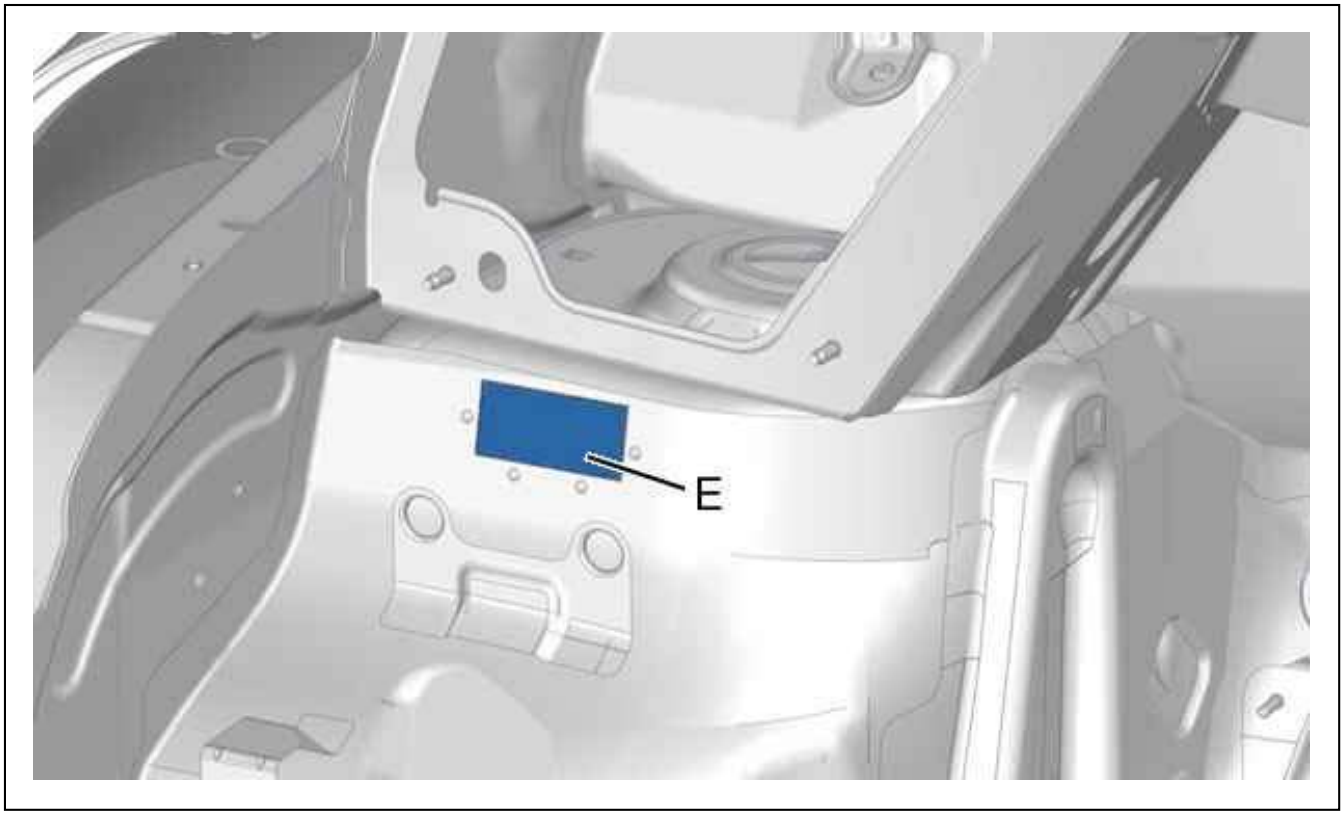

Figure : C4EB0QQD

Reference	Original stamped part	Vehicle	Number of lines
(E)	Front right wheel arch upper section	BERLINGO III C4 I C4 PICASSO DS5	2

3.5. Bulkhead flange right-hand section zone location

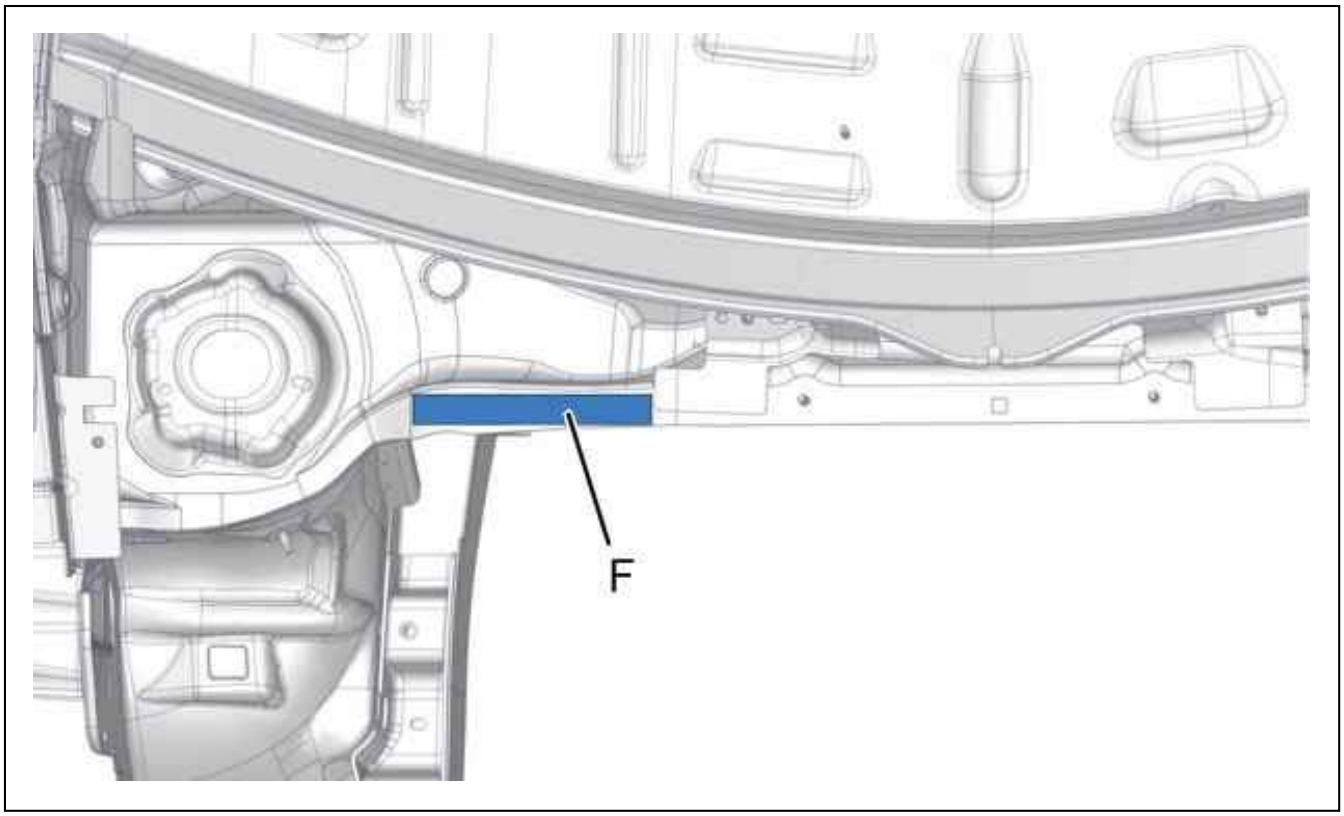

Figure : C4EB0QRD

Reference	Original stamped part	vehicles	Number of lines
(F)	Bulkhead flange right-hand section	C3 phase III DS3	1

3.6. Bulkhead flange right-hand central section zone location

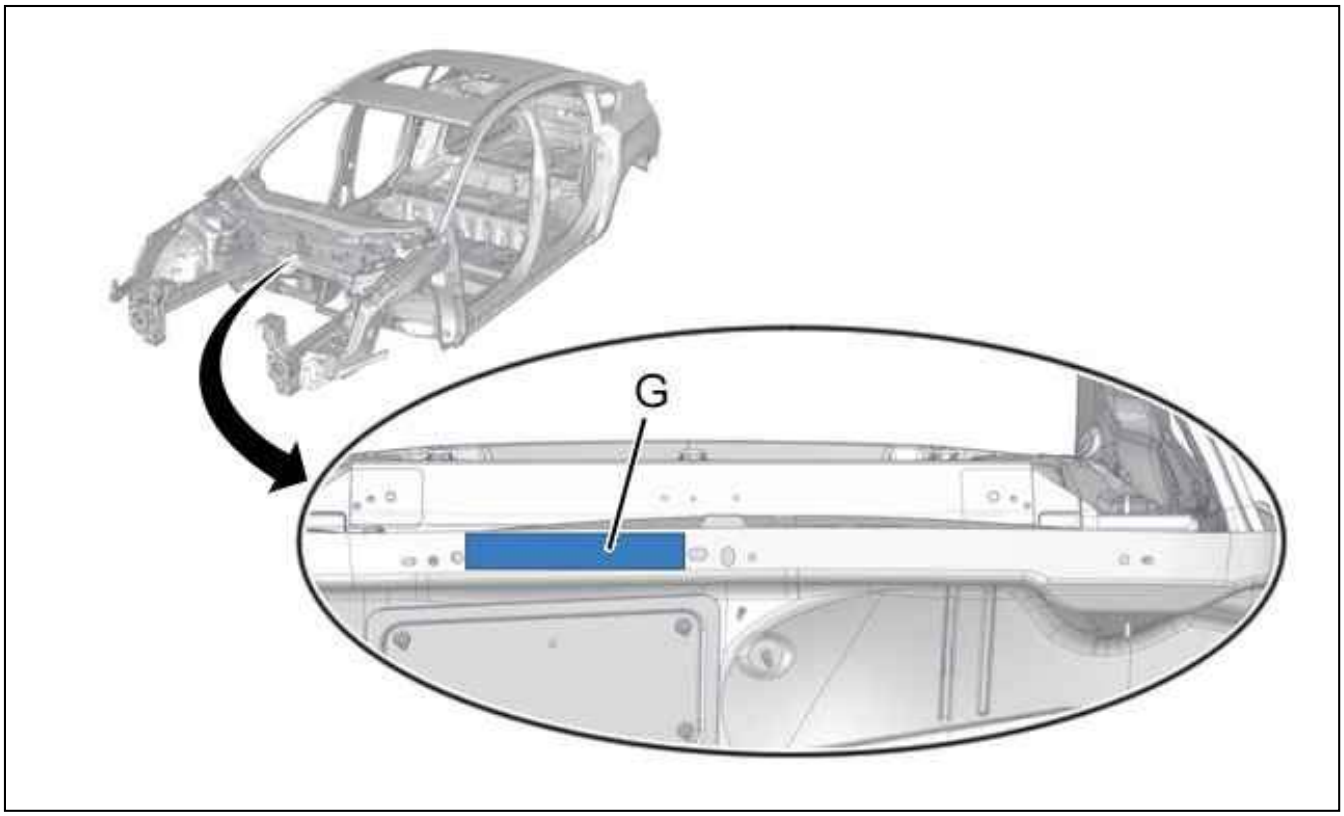

Figure : C4EB0QGD

Reference	Original stamped part	vehicles	Number of lines
(G)	Bulkhead flange right-hand central section	C8 C-Crosser XSARA PICASSO DISPATCH III C5 phase II C3 phase I C3 phase I (Restyled) C2 C-Élysée	1

3.7. Rear right wheel arch zone location

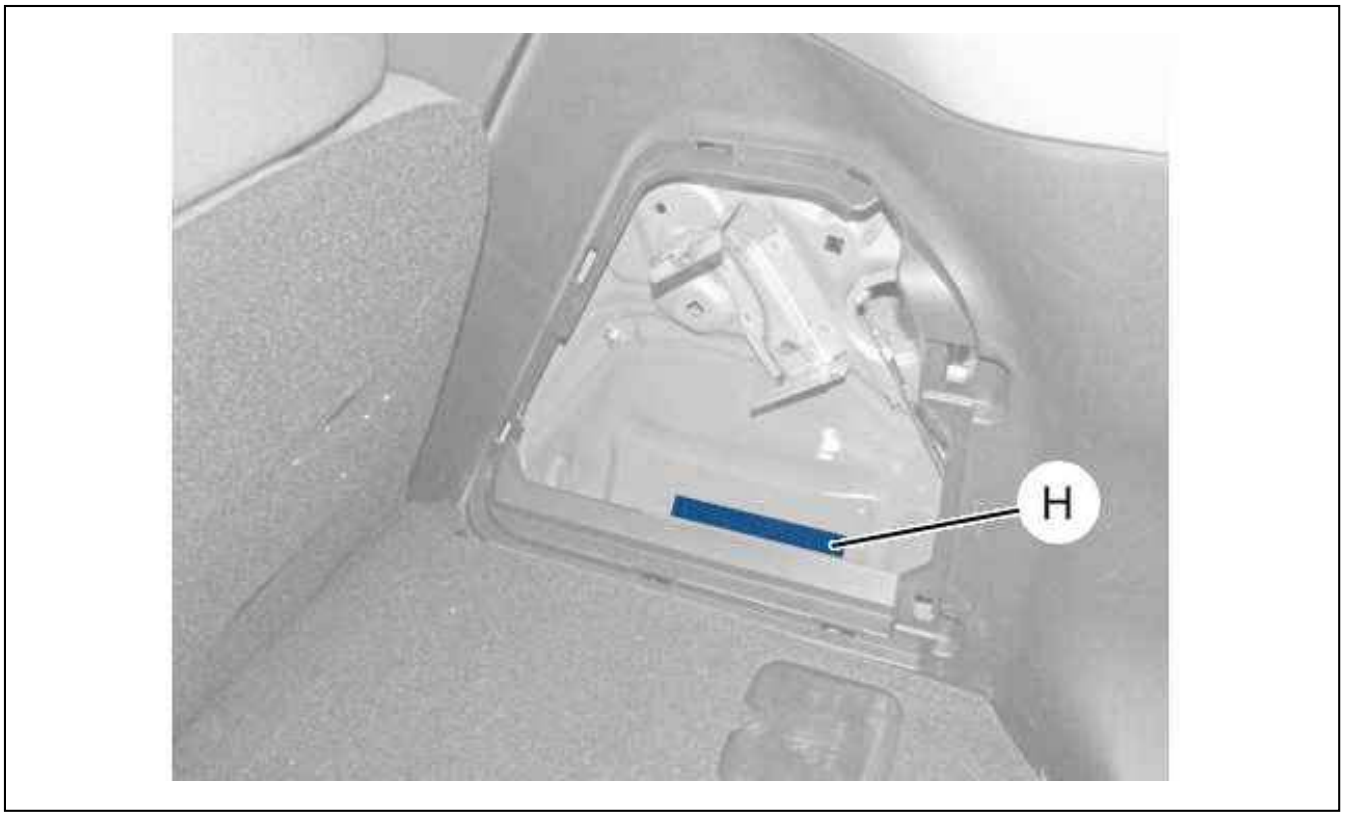

Figure : C4EB0QHD

Reference	Original stamped part	vehicles	Number of lines
(H)	Rear right hand wheel arch	C-Zero	1

3.8. Front right floor zone location

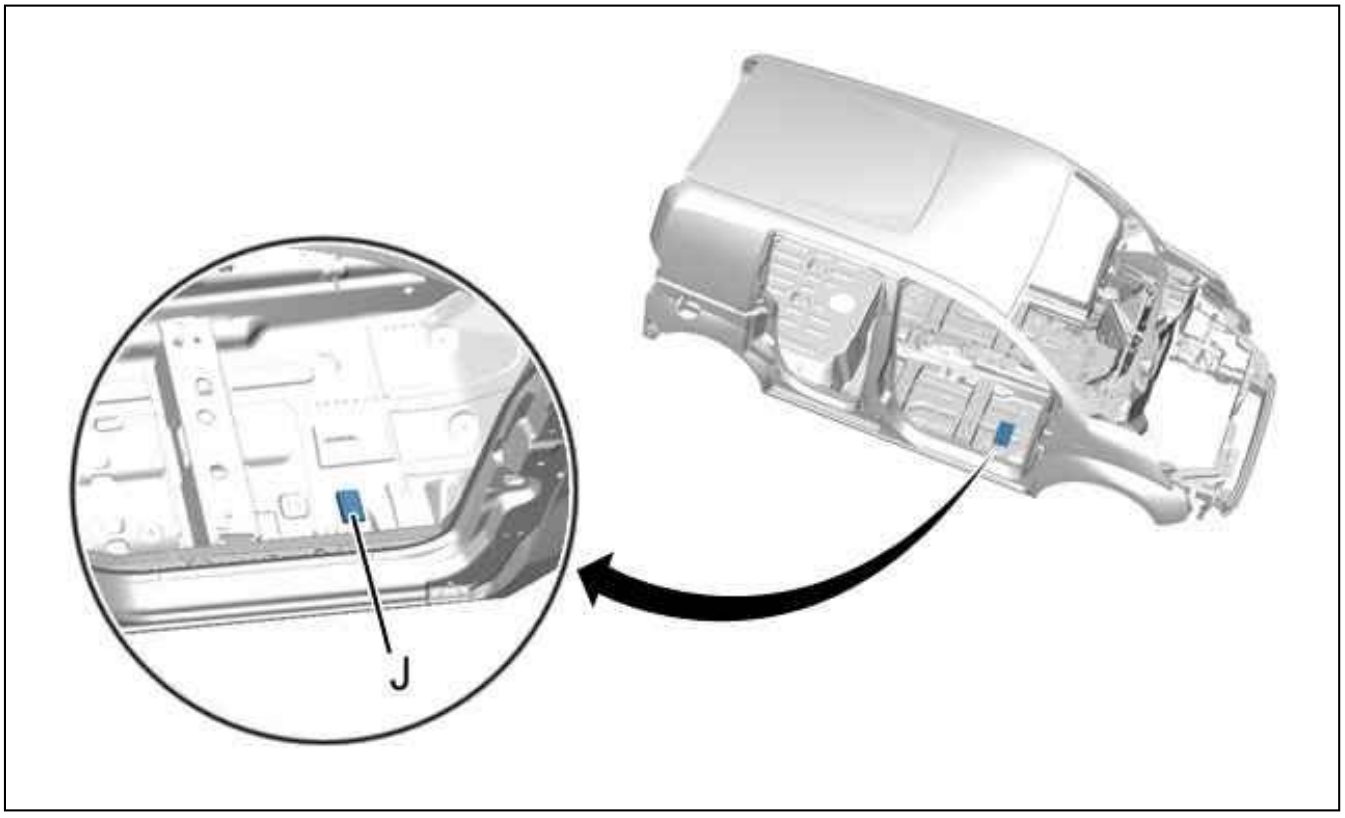

Figure : C4EB0QID

Reference	Original stamped part	vehicles	Number of lines
(J)	Front RH floor	NEMO	2

3.9. Front right seat crossmember zone location

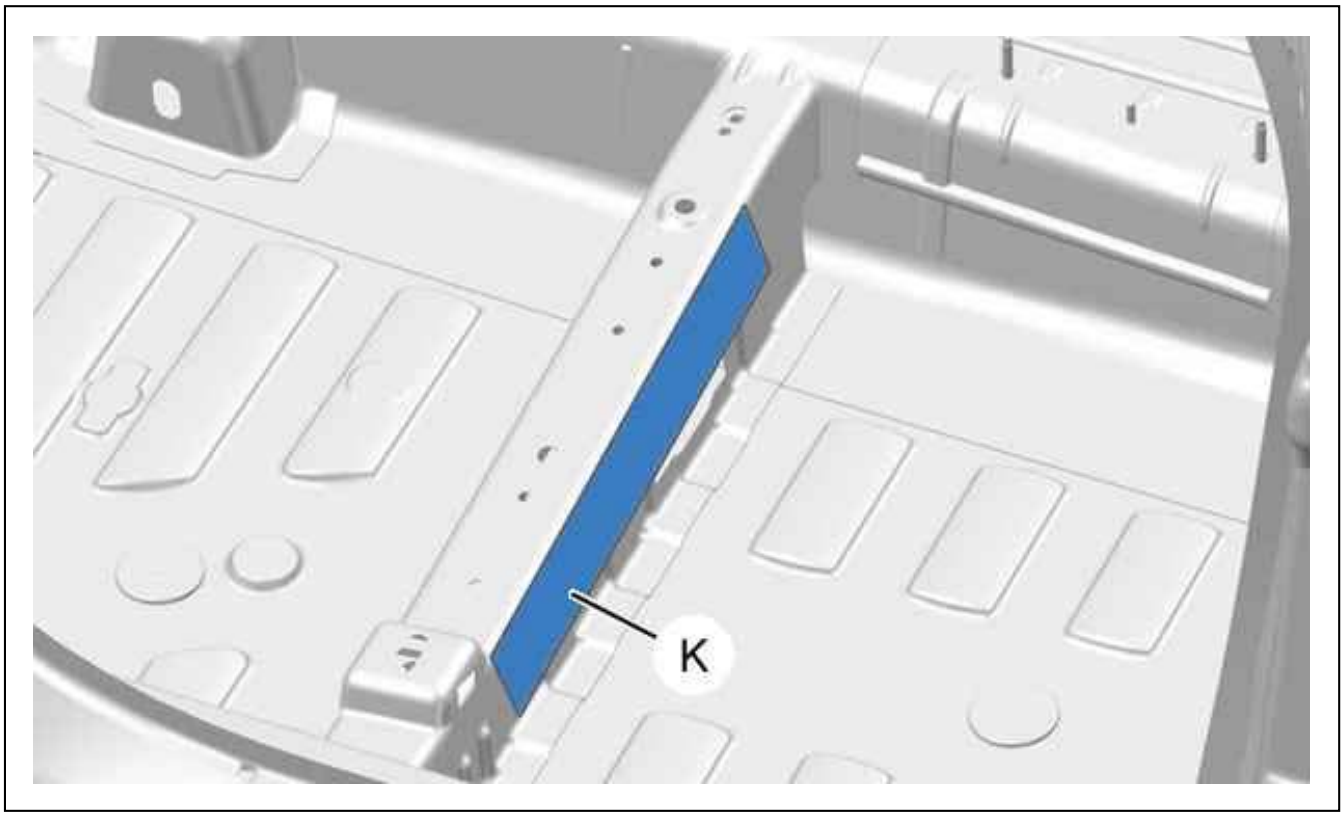

Figure : C4EB0QJD

Reference	Original stamped part	Vehicle	Number of lines
(K)	Front right seat crossmember	C1	1

3.10. Front right wheel arch

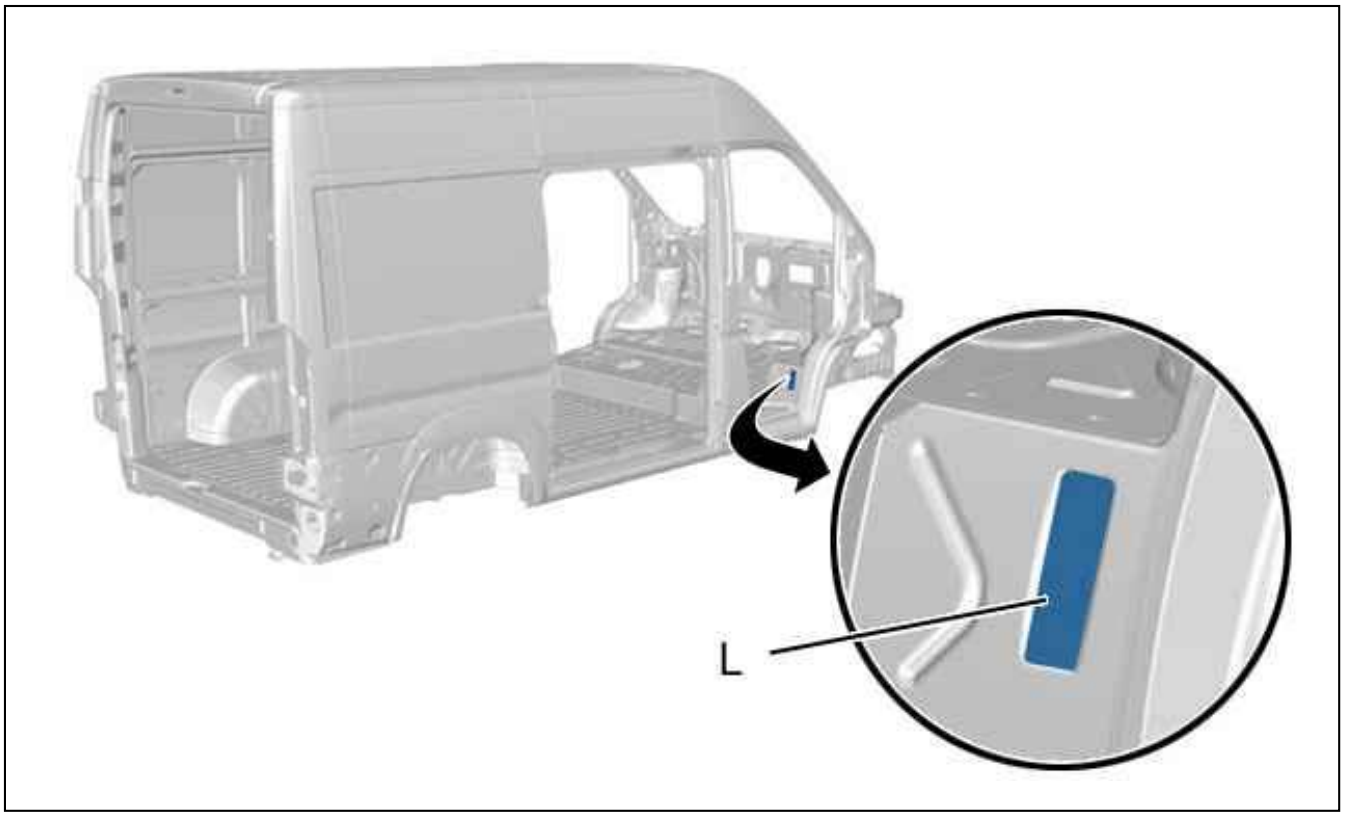

Figure : C4EB0R1D

Reference	Original stamped part	vehicles	Number of lines
"L"	Front right wheel arch	JUMPER (tous types)	2

3.11. Front right pillar

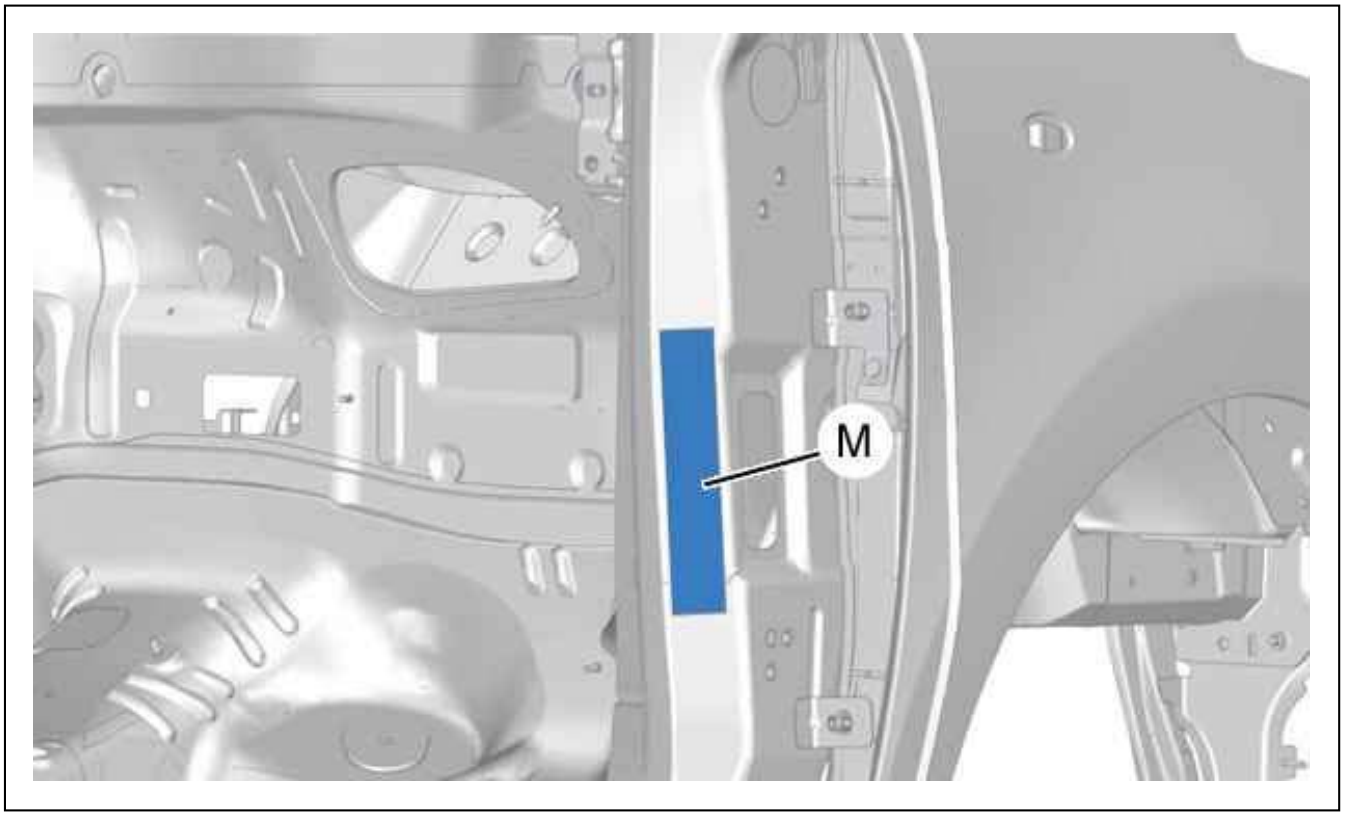

Figure : C4EB0RYD

Reference	Original stamped part	vehicles	Number of lines
(M)	Front right pillar	C3 PICASSO	1

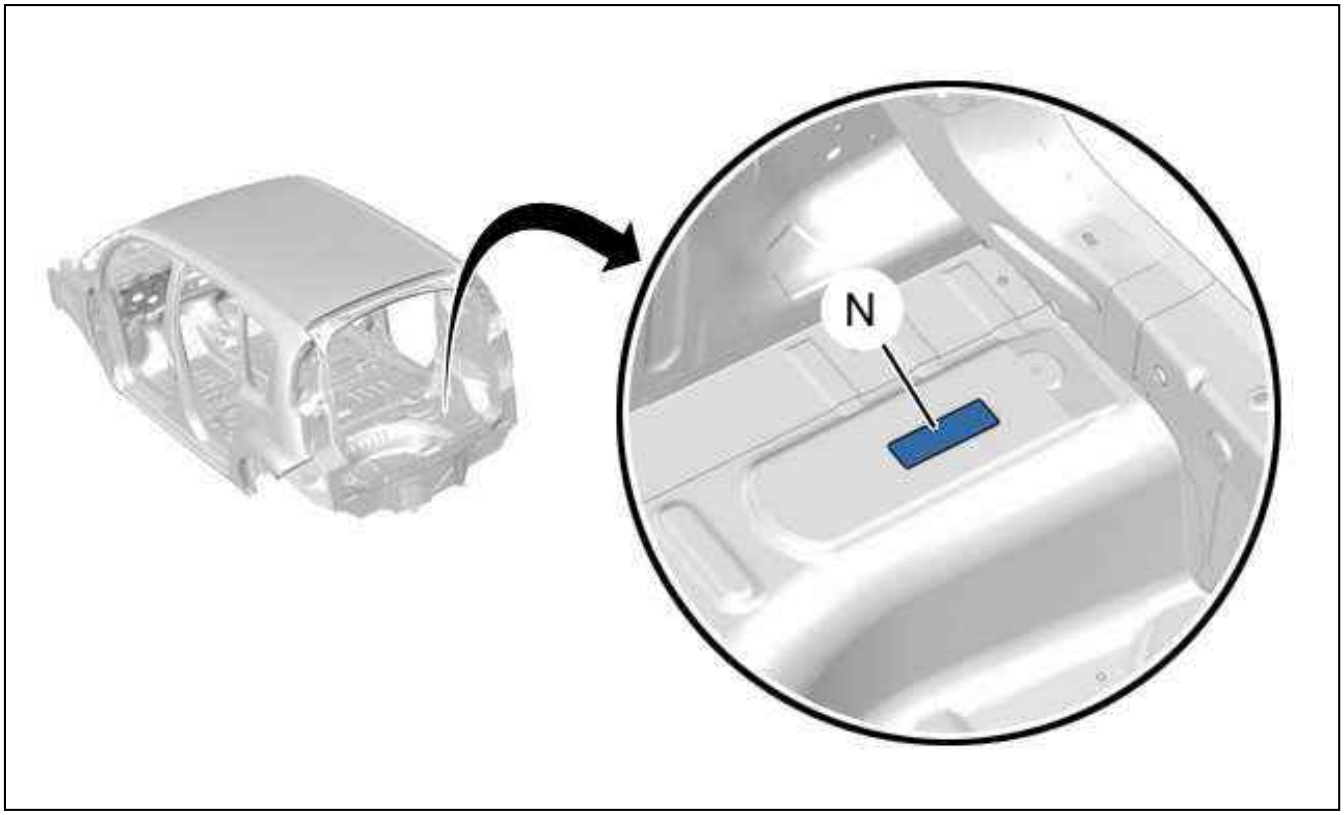

Figure : C4EB0RZD

Reference	Original stamped part	vehicles	Number of lines
(N)	Load floor	C3 PICASSO	1

N.B. : Change of location only if the front right pillar is replaced.

3.12. Lower windscreen aperture

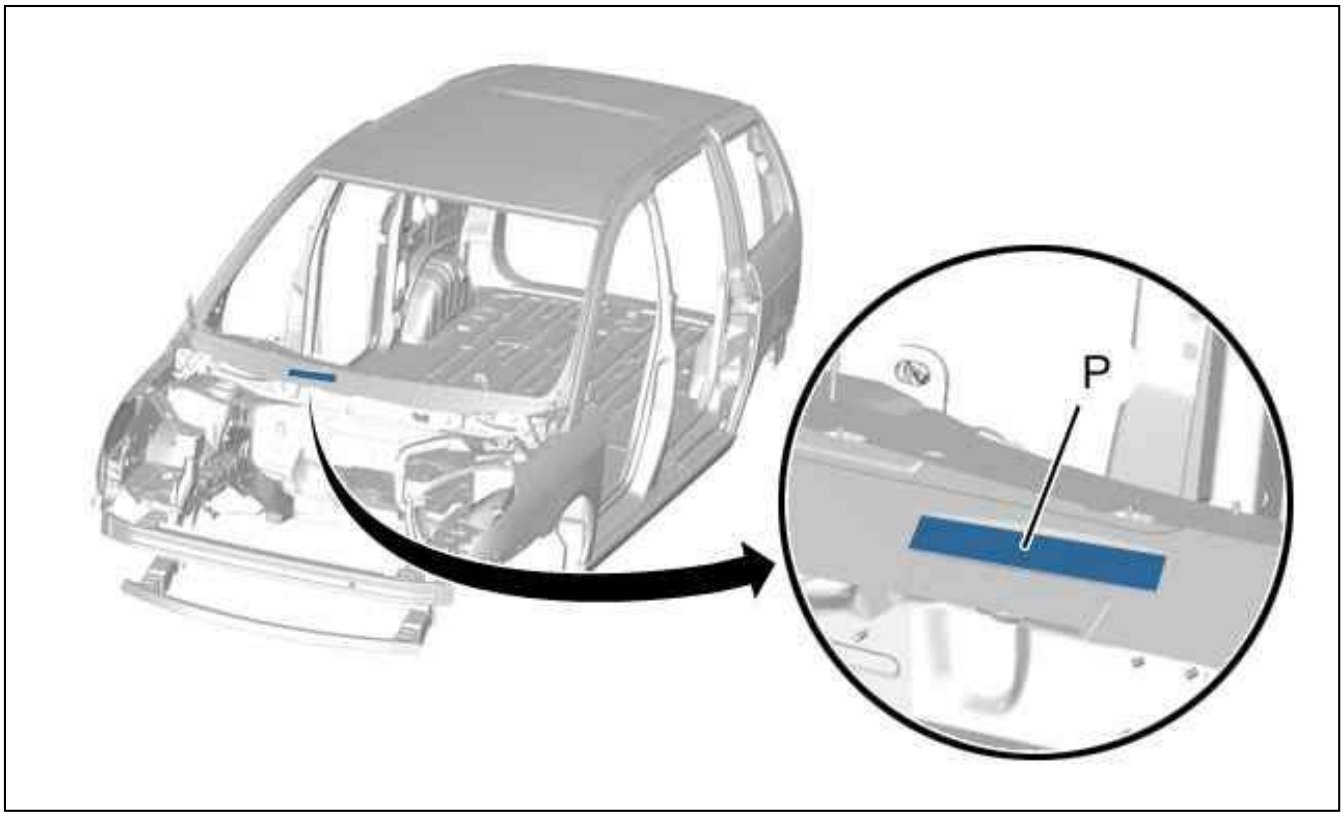

Figure : C4EB0S0D

Reference	Original stamped part	vehicles	Number of lines
"P"	Lower windscreen aperture	C8 DISPATCH 3	1

COLD STAMPED INSCRIPTION : SERIAL NUMBER (VIN) IN AFTER SALES

ESSENTIAL : Observe the safety and cleanliness recommendations .

ESSENTIAL : Observe the precautions to be taken for the pre-tensioning components .

ESSENTIAL : Before any work on the structure of a vehicle with on board electric energy (electric vehicle/hybrid vehicle), the vehicle must be isolated by an authorised technician.

CAUTION : All of the stripped surfaces must be protected by means of the approved electrolytic rezincing process .

1. Legislation

CAUTION : Refer to the regulations in force in the country.

2. Cold stamping is possible in the following cases

2.1. Case n°1

Replacement of the part bearing the cold stamped serial number.
Absence of the cold stamped serial number.

2.2. Case n°2

No visual access following modification not foreseen by the manufacturer.
Serial number illegible due to considerable corrosion.
Serial number concealed (Addition of products).
Traces of work in the serial number area (Symmetrical welding and grinding).

3. Information

3.1. Characteristics of the serial number

The regulation size of the punches for cold stamping is 7 mm.
The serial number consists of 17 characters.
The serial number is always situated on the right-hand section of the vehicle.
Depending on the vehicle, the serial number may be stamped on one or two lines.
In all cases, the serial number must be cold stamped onto a structural part.

3.2. Specifications for cold stamping of the serial number (VIN) in service

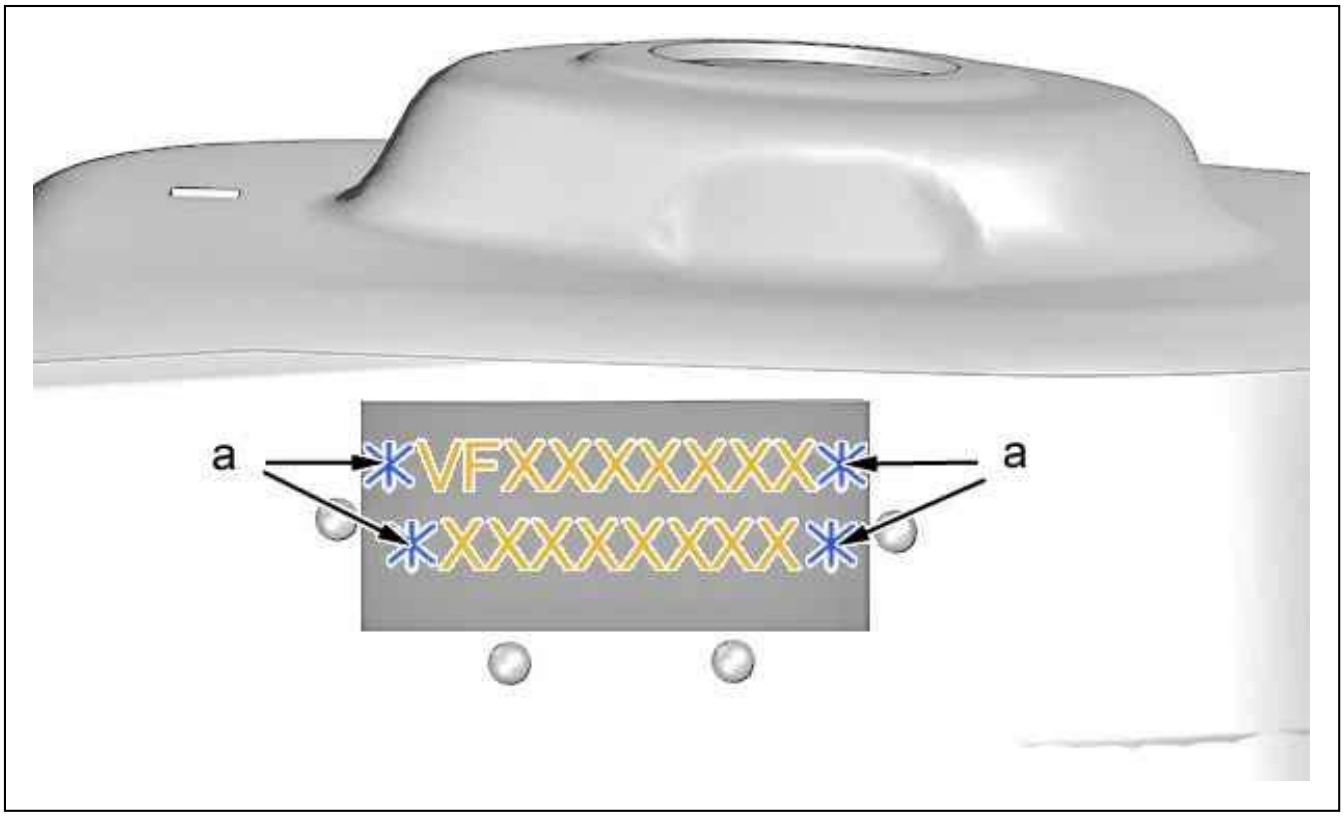

Figure : C4EB0NKD

"a" Non alphanumeric character.
When cold stamping, the marque punch mark is not compulsory.
Each line forming a serial number must have the symbol "a" at each end.

3.3. Creating the symbol

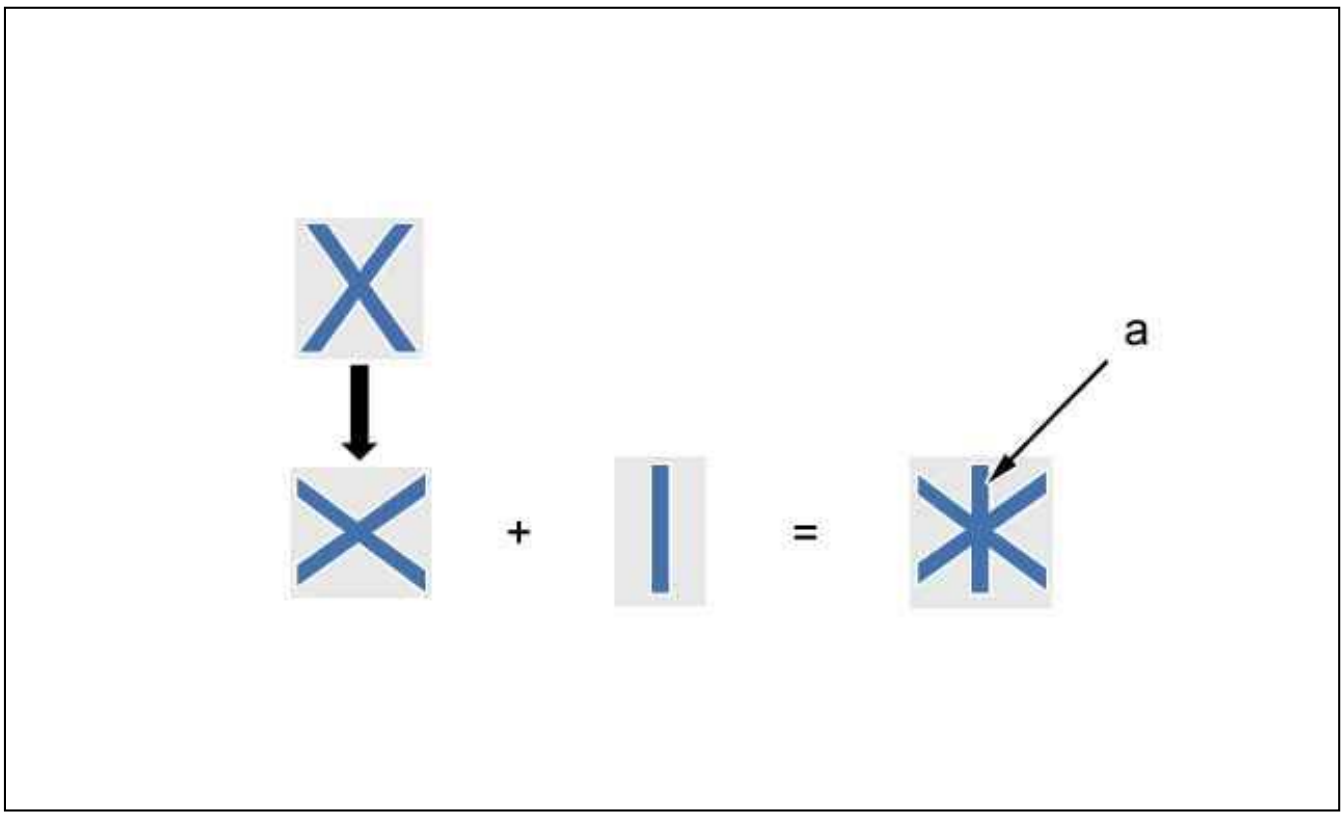

Figure : C4EB0NLD

The symbol "a" is obtained by stamping the letter "X" placed horizontally, with a second stamping of the letter "I" superimposed.
The cold stamping of a serial number must be carried out by an authorised repairer of the manufacturer’s marque.

4. Tooling

Kit of 7 mm stamping punches.
Mechanic’s hammer .

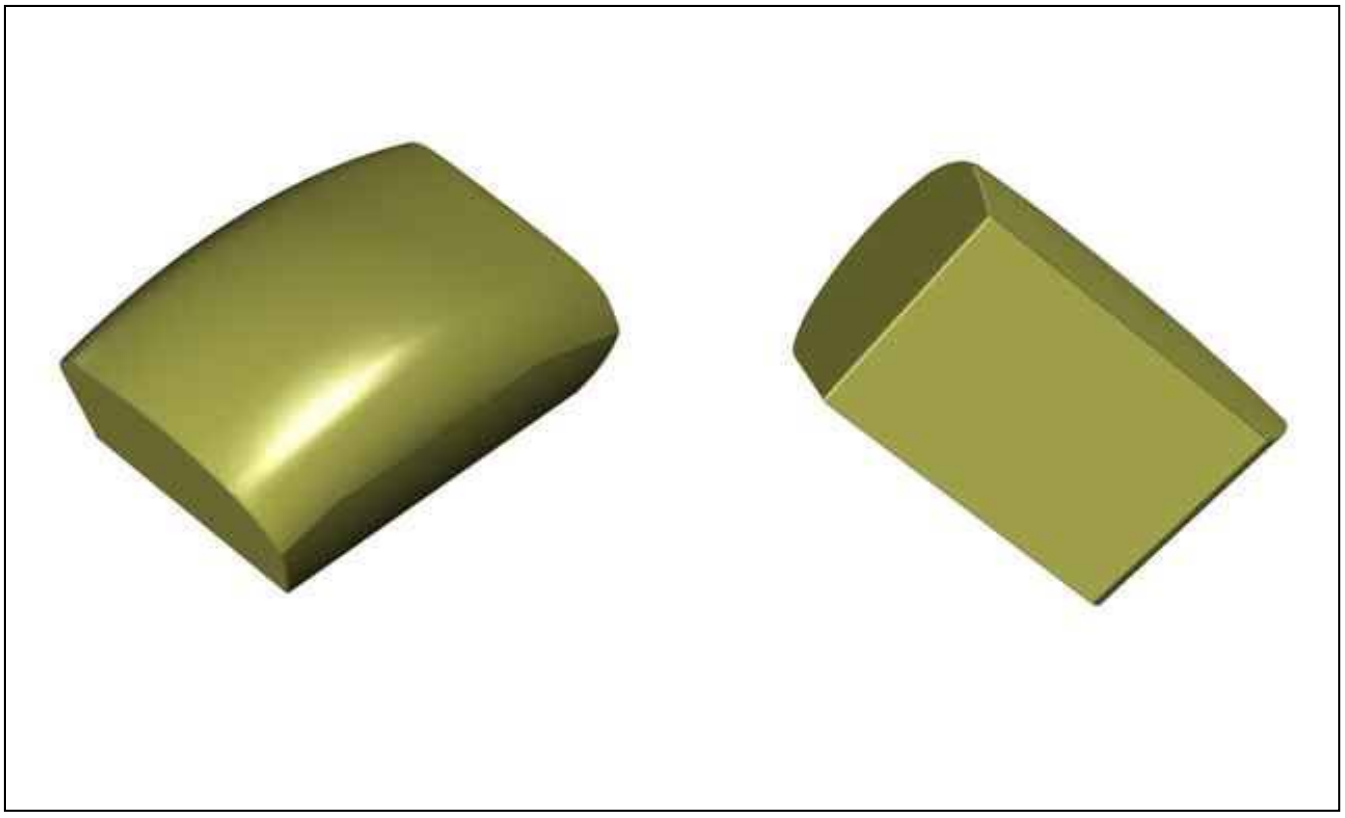

Figure : E5AB16TD

Coachbuilder’s dolly .
Use the dolly to prevent any distortion of the panel during stamping.
Position the dolly on the opposite face of the cold stamping area.

5. Preliminary operations

CAUTION : To prevent any corrosion, the cold stamping must be carried out before painting.

Remove the components necessary for positioning the coachbuilder’s dolly and the stamping punches.

6. Cold stamped inscription

N.B. : 2 operators are required for this operation.

7. Cold stamping of the serial number (VIN)

CAUTION : The serial number is always situated on the right-hand section of the vehicle.

The serial number can be stamped close to the original one, whether underneath, above or to the side.
Refer to the method : Location : Cold stamping of the serial number (VIN).
The stamping of the serial number (VIN) may require removal of a component (Windscreen, scuttle grille, bulkhead protection, etc.).

8. Protection

Apply a phosphate-print layer on the zone laid bare.
Paint as required.

9. Refitting

Refit the items removed beforehand (Windscreen, scuttle grille, bulkhead protection, etc.).

TIGHTENING TORQUES : TIPPER TRUCK HYDRAULIC CONTROL SYSTEM

1. Hydraulic unit

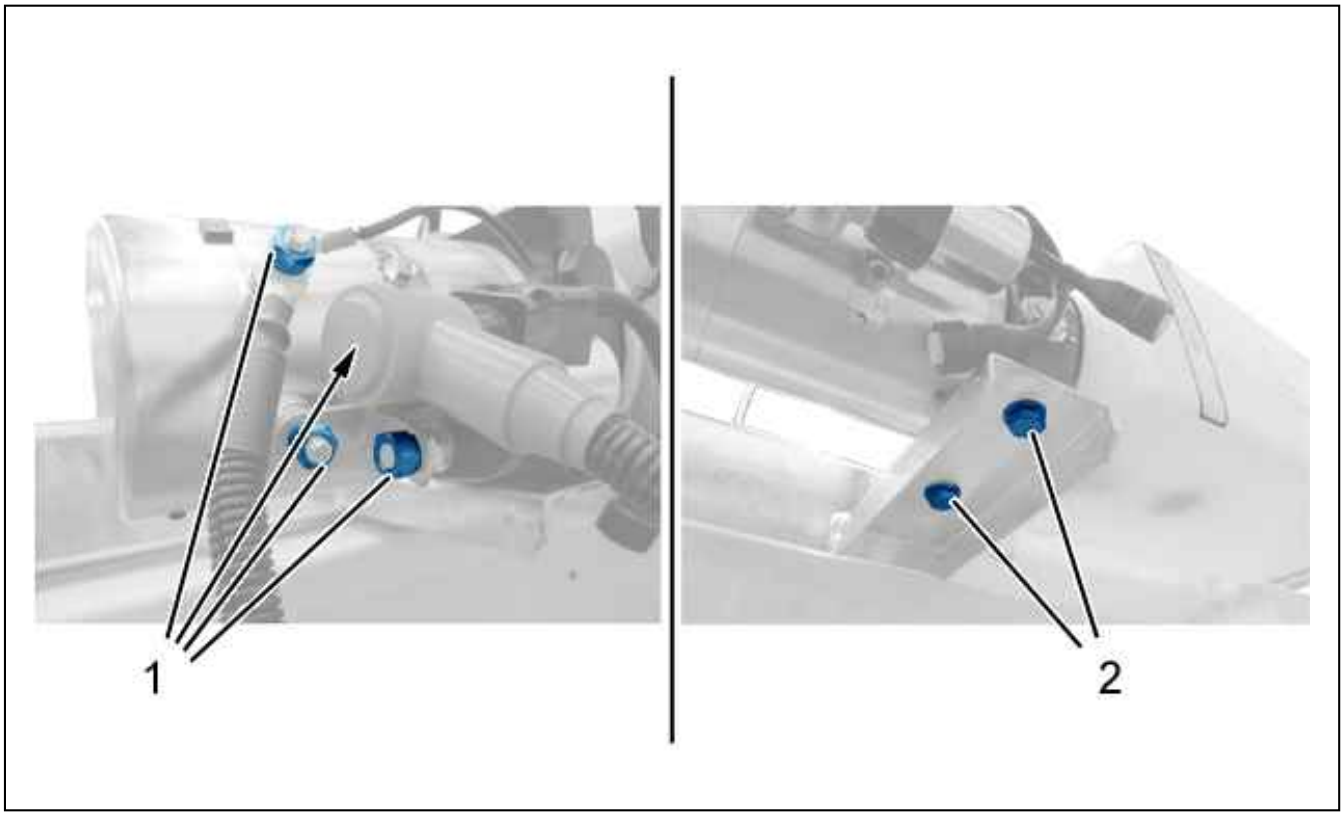

Figure : C7BB01OD

Reference	Designation	Tightening torque
(1)	Nuts (Electrical harness)	1,2 daNm
(2)	Bolt (Hydraulic unit)	4 daNm

2. Hydraulic ram

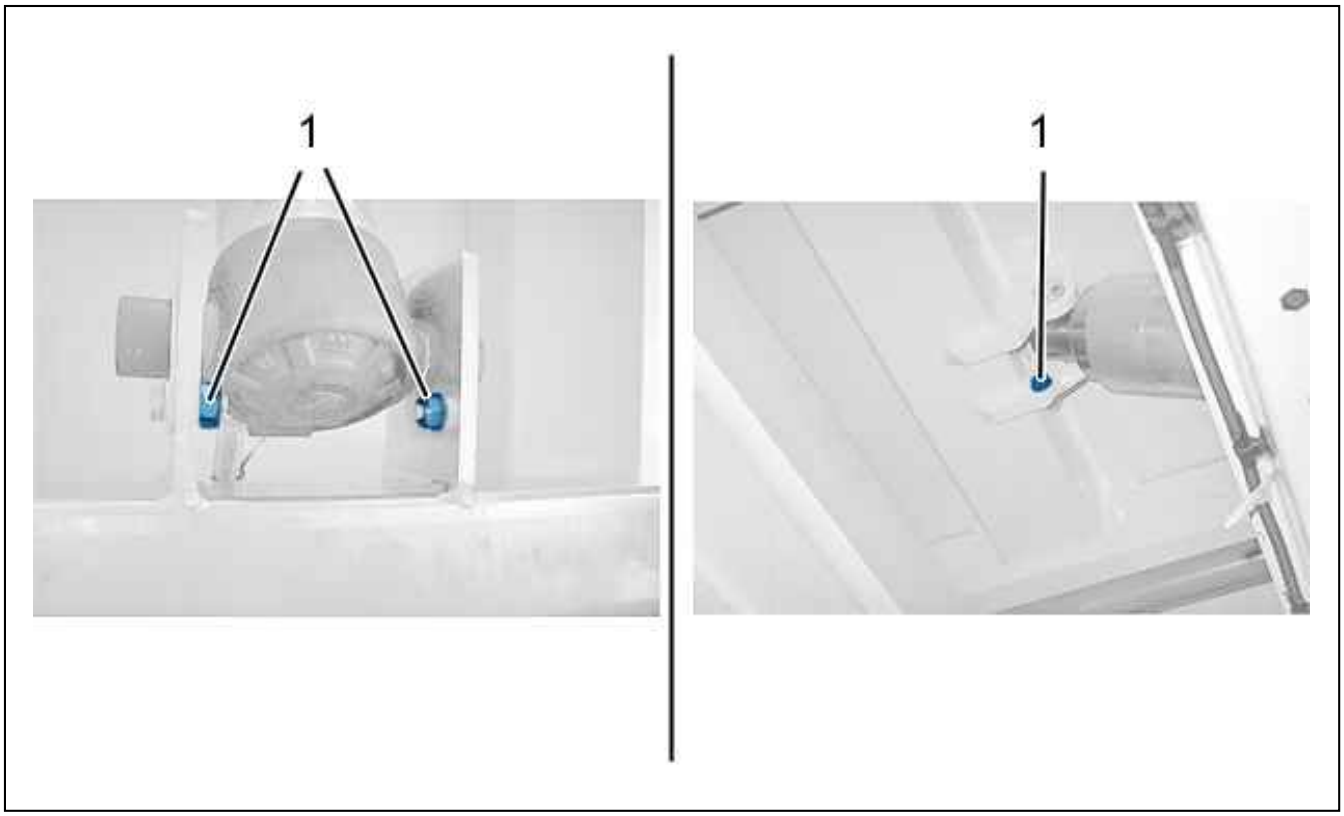

Figure : C7BB01PD

Reference	Designation	Tightening torque
(1)	Nuts (Hydraulic ram)	6 daNm

3. Circuit cut-off

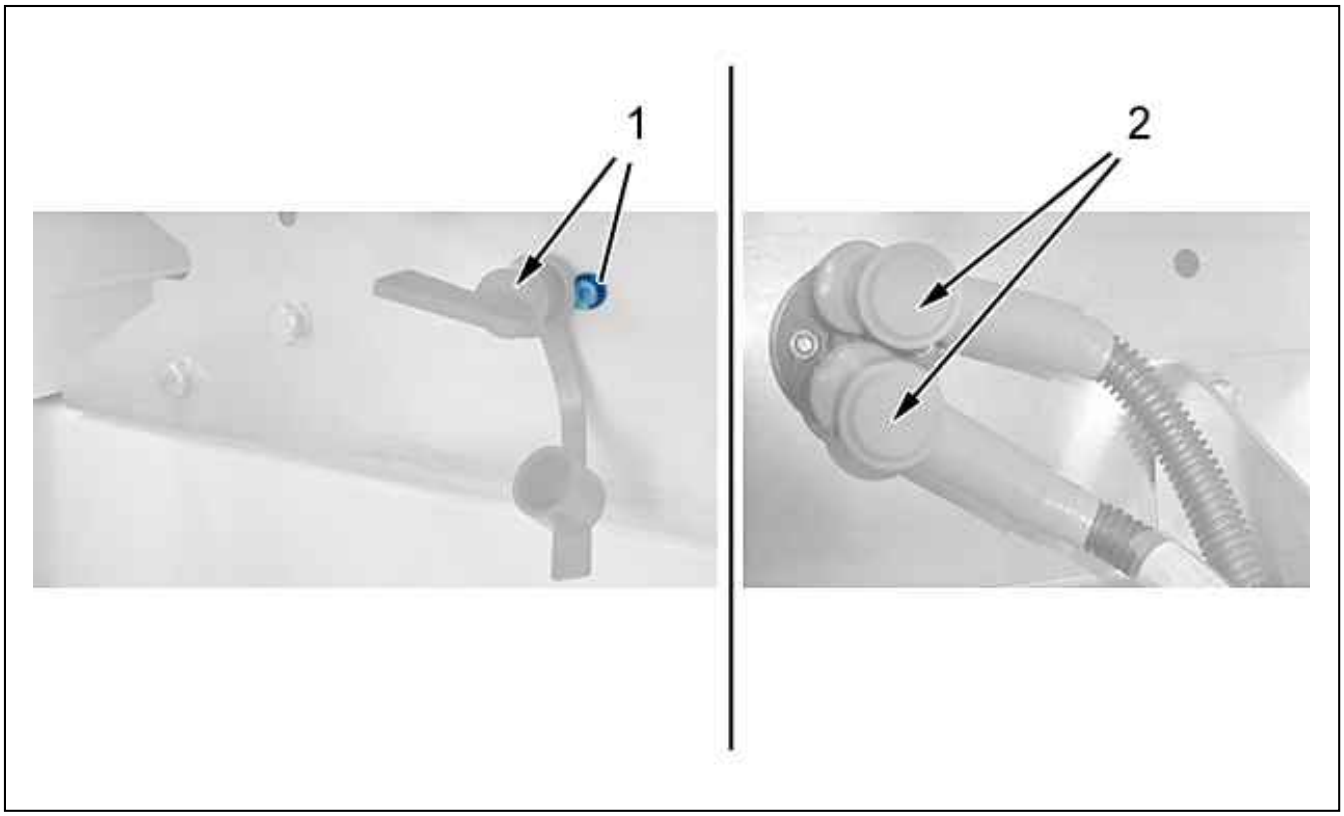

Figure : C7BB01QD

Reference	Designation	Tightening torque
(1)	Bolt / Nuts (Circuit cut-off)	0,8 daNm
(2)	Nuts (Electrical harness)	1 daNm

REMOVING - REFITTING : TIPPER TRUCK HYDRAULIC RAM AND ELECTRO-HYDRAULIC SYSTEM

ESSENTIAL : Observe the safety and cleanliness recommendations .

ESSENTIAL : Follow the safety instructions that are specific to the tipper truck .

1. Checking the level and bleeding the hydraulic circuit

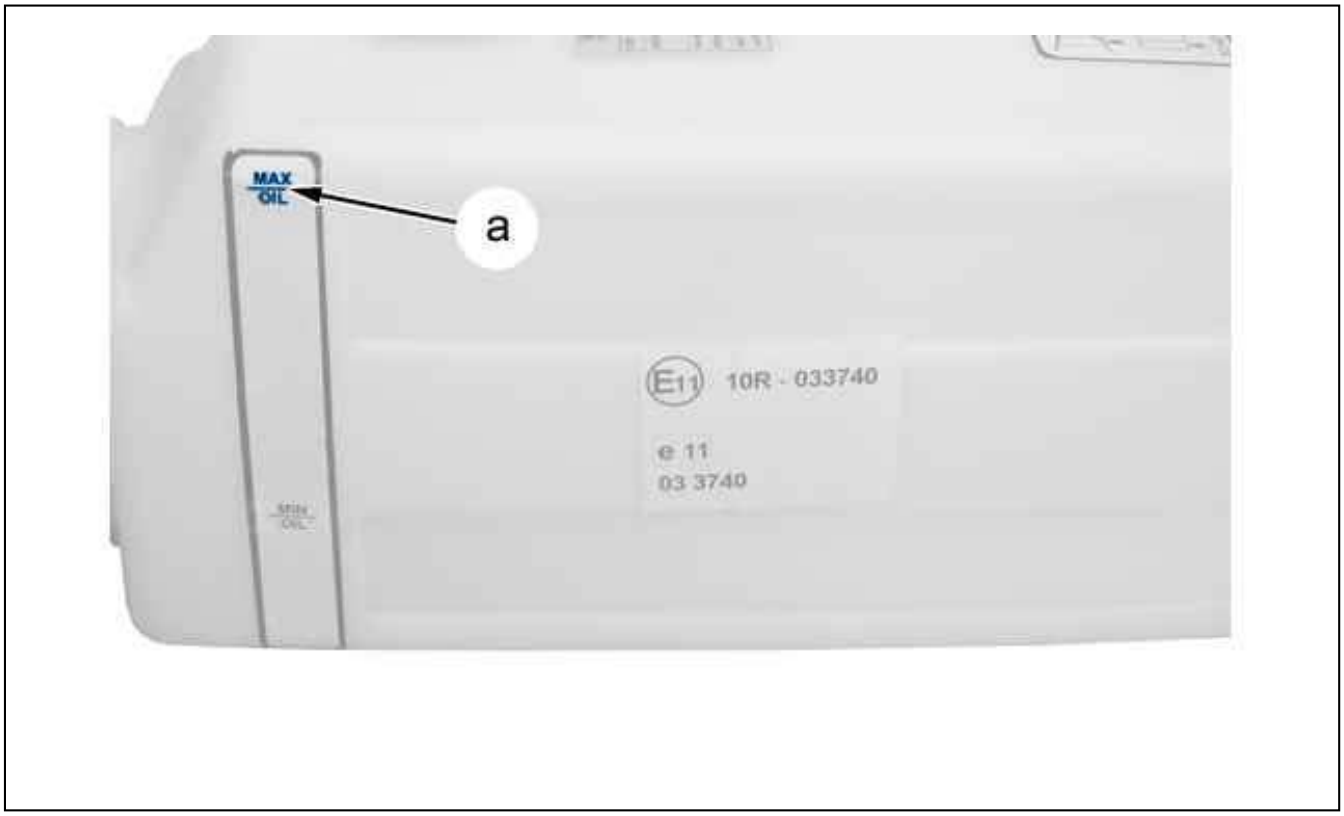

Figure : C7BG001D

Checking the oil level must be performed with the tipper truck in the horizontal position.
Max. oil level (at "a").
For bleeding the hydraulic circuit, raise and lower the tipper 5 times.

2. Hydraulic reservoir pump assembly

Put the vehicle on a hoist.
Place the tipper on the horizontal.
Disconnect the ancillaries battery.

2.1. Removing

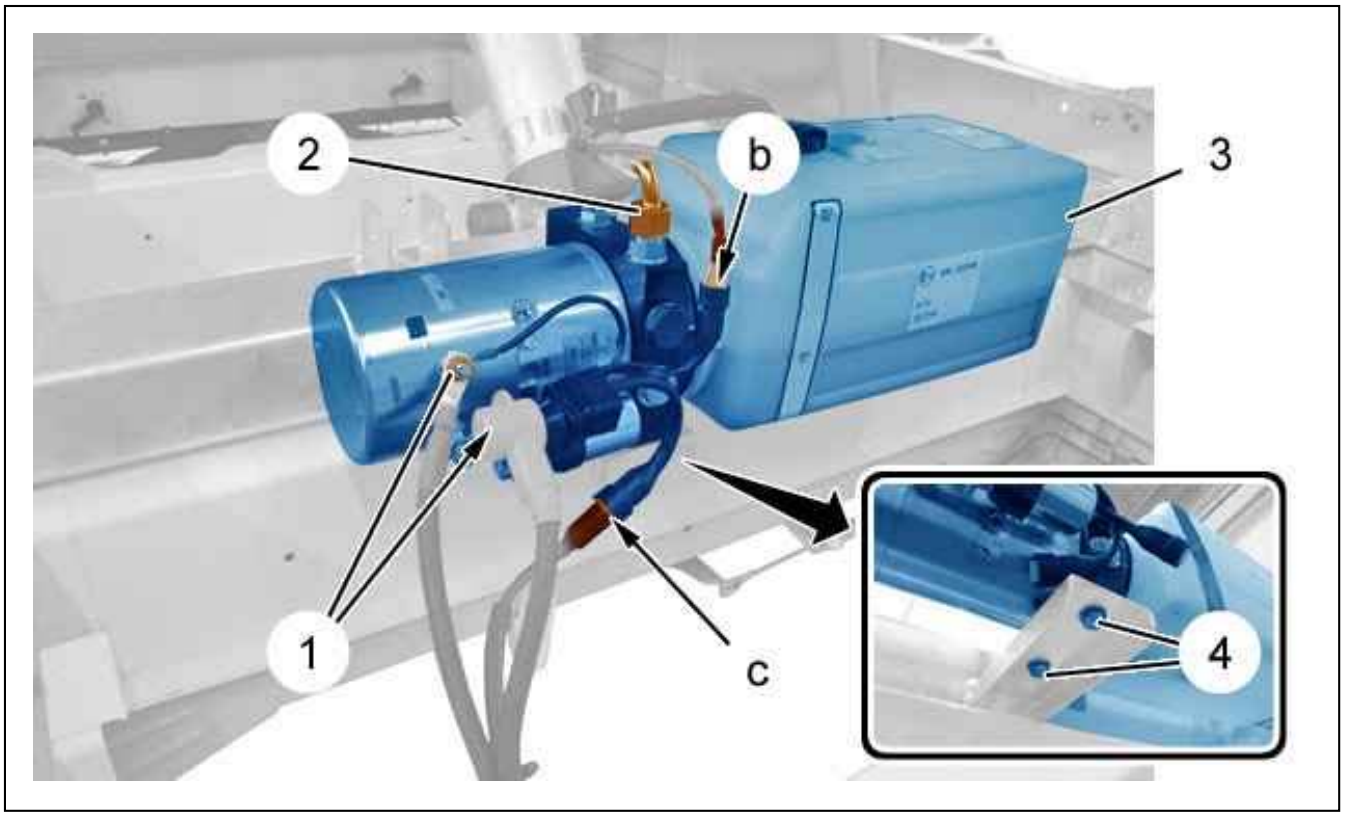

Figure : C7BG002D

Disconnect the connectors (at "b, c").
Remove :

- The nuts (1)
- Hydraulic pipe (2)
- The bolts (4)
- The hydraulic reservoir pump assembly (3)

2.2. Refitting

CAUTION : Adhere to the tightening torques .

Fill the hydraulic reservoir with new oil.
Refit :

- The hydraulic reservoir pump assembly (3)
- The bolts (4)
- Hydraulic pipe (2)
- The nuts (1)

Reconnect the connectors (at "b, c").

CAUTION : Perform the operations that are required following a reconnection of the ancillaries battery.

Reconnect the ancillaries battery.
Bleed and top up the level of the hydraulic circuit.

3. Hydraulic ram

Put the vehicle on a hoist.
Place the tipper on the horizontal.

Disconnect the ancillaries battery.

3.1. Removing

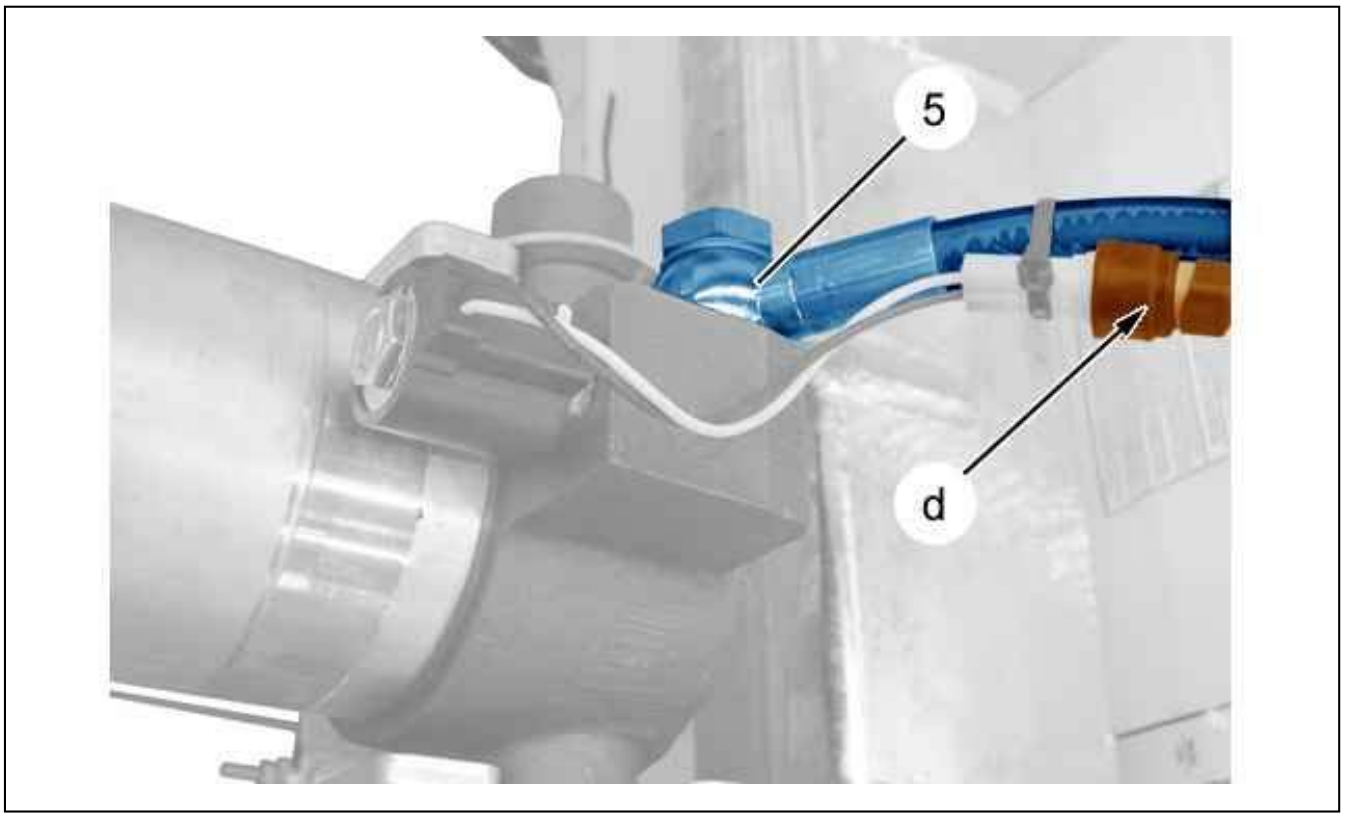

Figure : C7BG003D

Disconnect the connector (at "d").
Uncouple the hydraulic pipe (5).

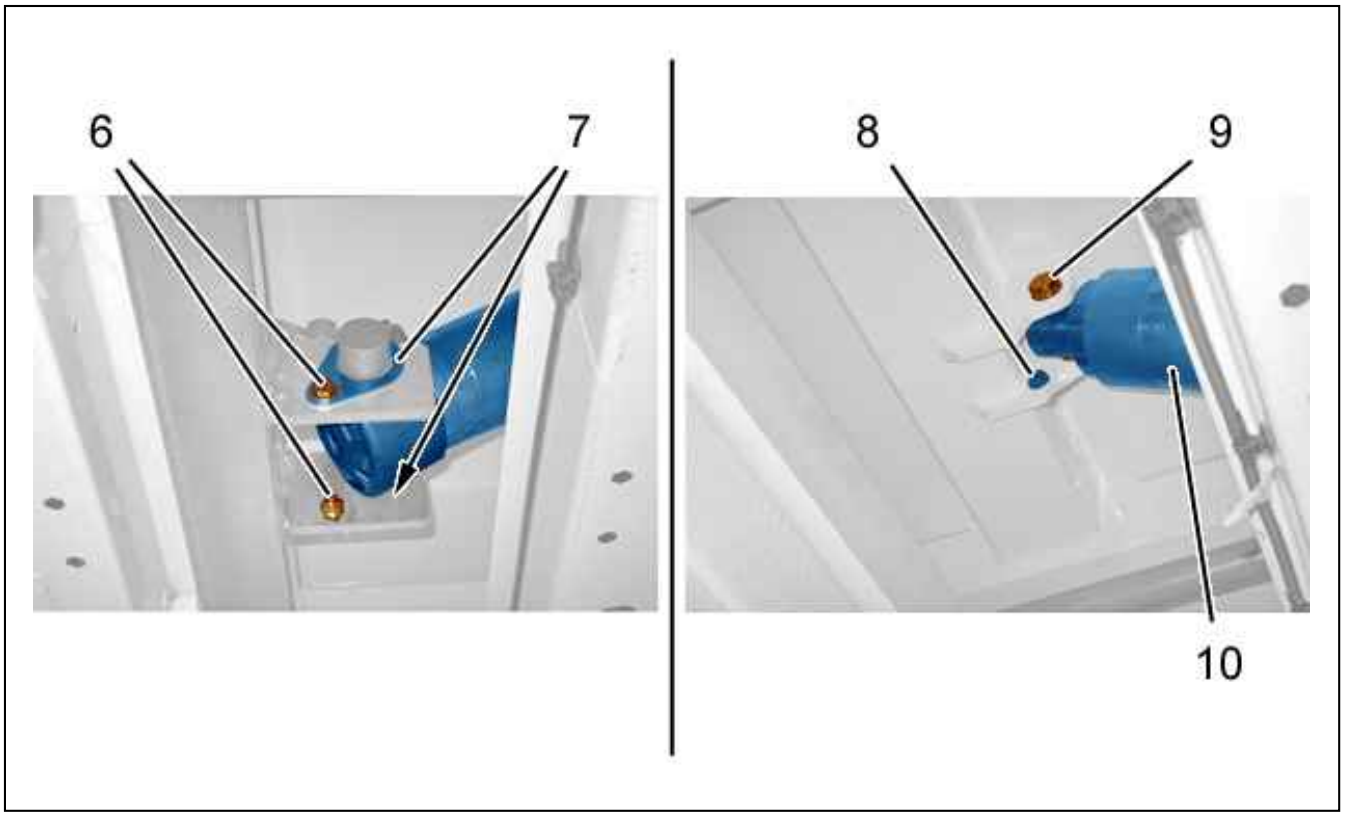

Figure : C7BG004D

Remove :

- The bolts (6)
- The shims (7)
- The bolt (8)
- The shaft (9)
- The hydraulic ram (10)

3.2. Refitting

CAUTION : Adhere to the tightening torques .

Refit :

- The hydraulic ram (10)
- The shaft (9)
- The bolt (8)
- The shims (7)
- The bolts (6)

Couple up the hydraulic pipe (5).
Reconnect the connector (at "d").

CAUTION : Perform the operations that are required following a reconnection of the ancillaries battery.

Reconnect the ancillaries battery.
Bleed and top up the level of the hydraulic circuit.

4. Electrovalve on ram

Put the vehicle on a hoist.

Place the tipper on the horizontal.
Disconnect the ancillaries battery.

4.1. Removing

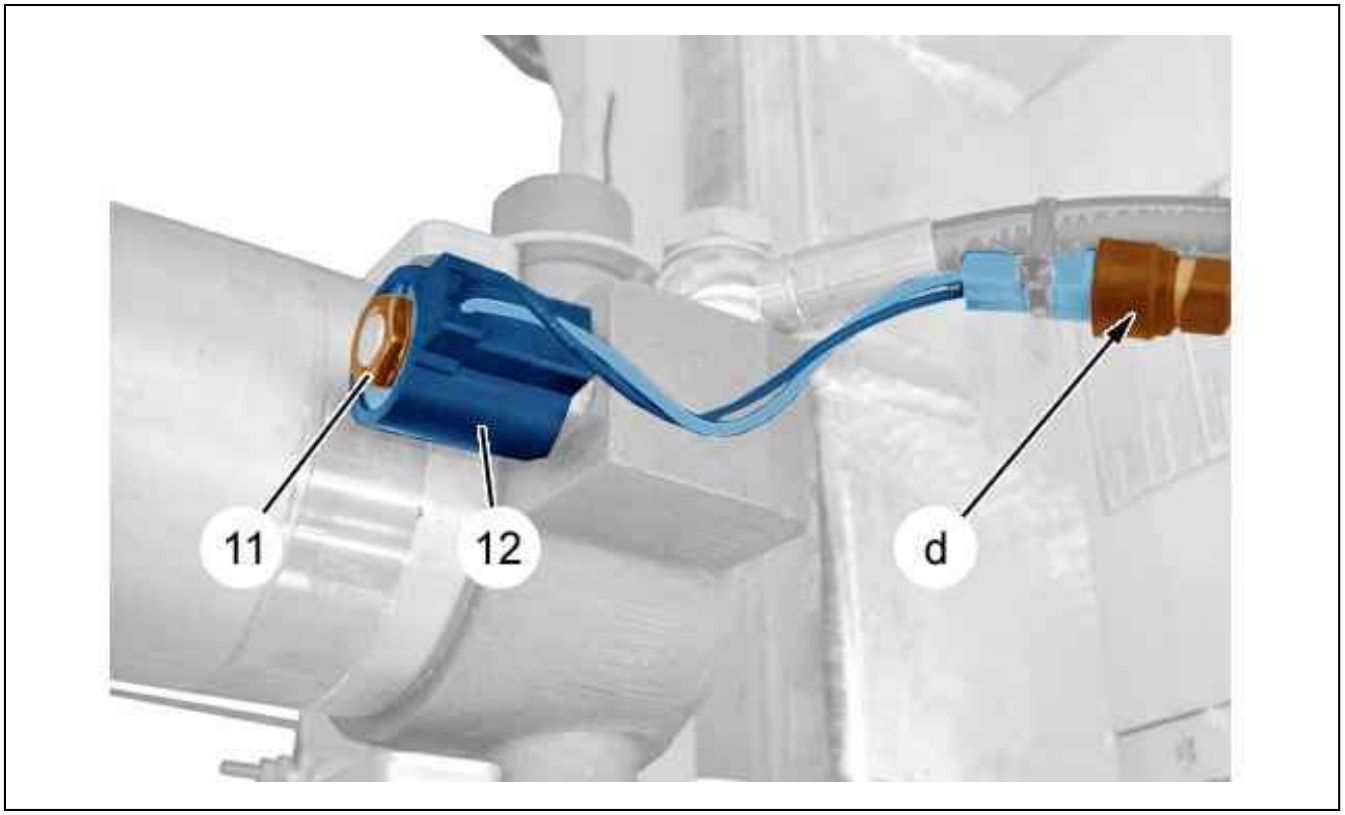

Figure : C7BG005D

Disconnect the connector (at "d").
Remove :

- The nut (11)
- The coil (12)

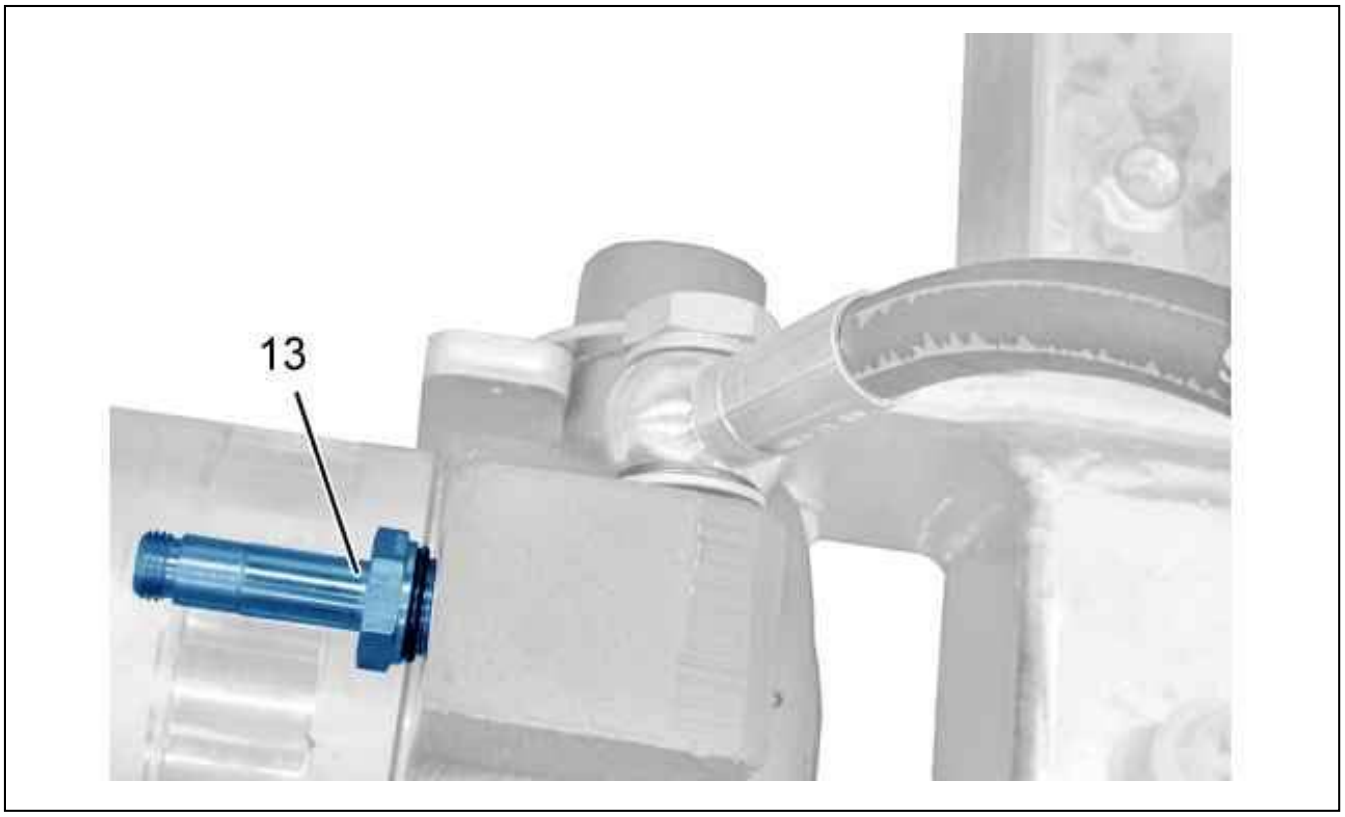

Figure : C7BG006D

Remove the solenoid valve (13).

4.2. Refitting

Refit :

- The solenoid valve (13)
- The coil (12)
- The nut (11)

Reconnect the connector "d" (at ""d"").

CAUTION : Perform the operations that are required following a reconnection of the ancillaries battery.

Reconnect the ancillaries battery.
Bleed and top up the level of the hydraulic circuit.

SAFETY RECOMMENDATIONS : OPERATIONS ON TIPPER TRUCK

ESSENTIAL : Observe the safety and cleanliness recommendations .

ESSENTIAL : Do not operate underneath the tipper while it is being raised and lowered.

ESSENTIAL : Operate with the tipper in the horizontal position.

CAUTION : The vehicle must be stationary, engine switched off.

N.B. : These precautions are compulsory for all operations performed on the hydraulic circuit.

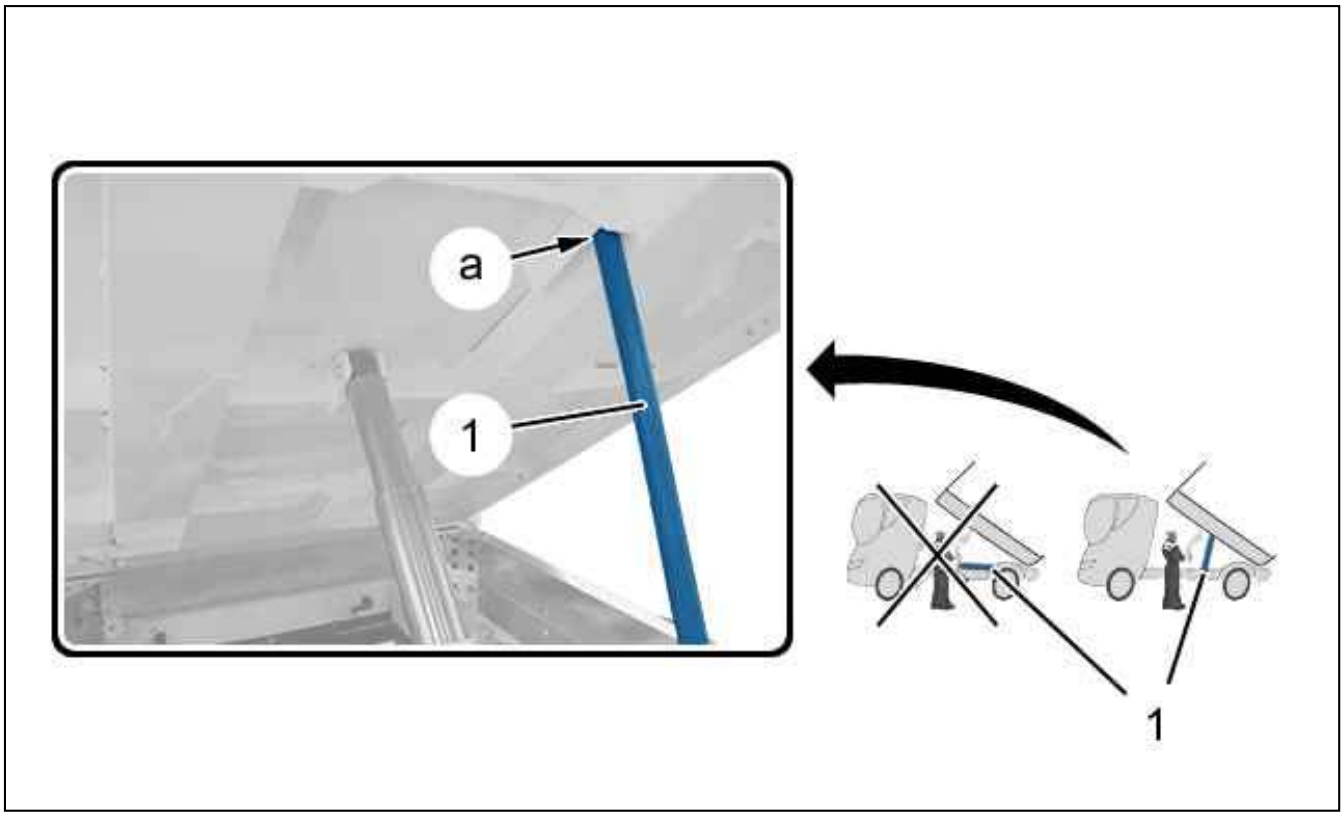

Figure : C7BK001D

Place the tipper in safety mode : Using the strut (1) (at "a").

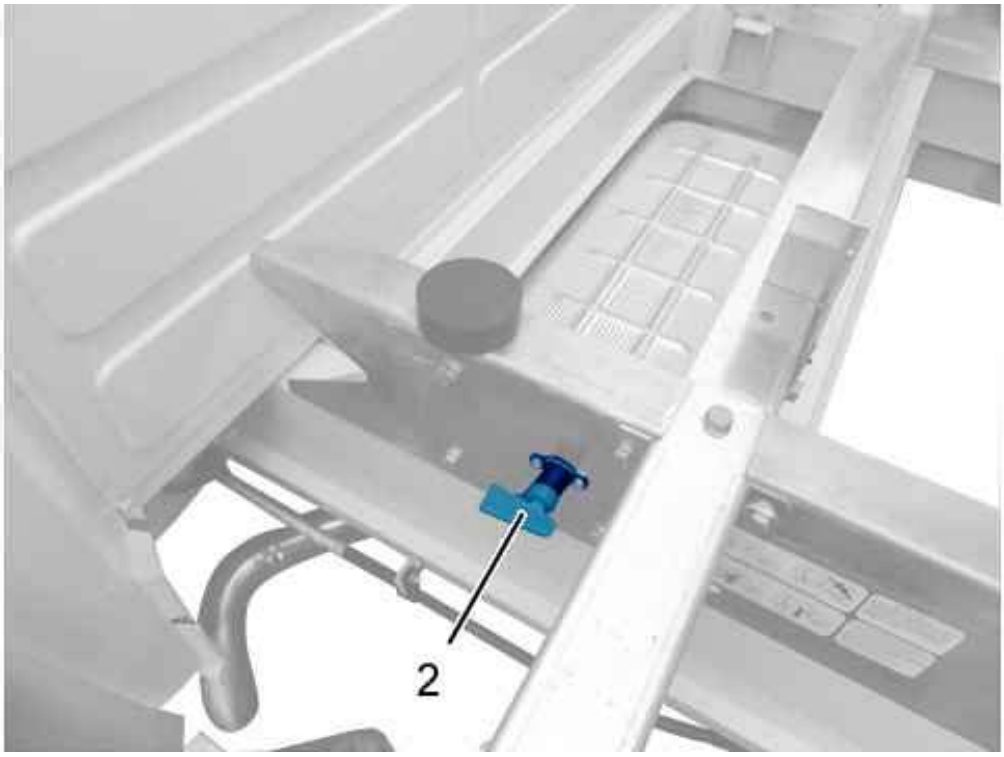

Figure : C7BK002D

Make the tipper safe by actioning the circuit-breaker (2) when removing-refitting the following components :

- Hydraulic unit
- Hydraulic ram
- Hydraulic pipe
- Hydraulic ram electrovalve

TECHNICAL NOTE : BLEEDING THE BRAKE SYSTEM

CAUTION : The use of DOT4 brake fluid for the brake circuits is compulsory.

CAUTION : During the bleeding operation : Keep the fluid topped up in the reservoir and complete it.

N.B. : Use only clean fluid free from bubbles. Avoid any introduction of impurities into the hydraulic system.

1. Bleeding the primary braking circuit

CAUTION : Do not switch on the ignition at any time during the operation.

N.B. : Bleed the primary circuit until clean, non-foaming brake fluid is obtained.

There are 2 procedures for bleeding the primary brake circuit.

1.1. Bleeding the primary braking circuit (With the bleeding device)

Bleed the circuit following the instructions for use of the equipment.

1.2. Bleeding the primary braking circuit (without brake bleeding equipment)

N.B. : Two operators are necessary.

Couple a transparent tube on the bleed screw .
Press the brake pedal slowly.
Open the bleed screw .
Hold the pedal fully down.
Close the bleed screw .
Allow the brake pedal to return naturally.
Repeat the operation until the fluid running out is clean and free from air bubbles.
Proceed in the same way for the other wheels.

N.B. : Check that the wheels rotate freely when the parking brake is released .

1.3. Checking : Bleeding the primary braking circuit

At the end of the bleed programme, check and top up, if necessary, the brake fluid level.
Check the travel of the brake pedal (no extension).
If the travel is long and spongy, repeat the bleed procedure.
Start the engine.
Check the travel of the brake pedal (no extension) ; Road test the vehicle (if necessary).
If brake pedal travel is not correct ; Bleed the secondary brake circuit.

2. Bleed the secondary brake circuit

Bleeding of the secondary braking circuit is done with a diagnostic tool.
This procedure is only carried out if the primary brake circuit has been bled.
Continue the procedure for bleeding of the hydraulic circuit as defined by the diagnostic tool.
At the end of the bleed programme, check and top up, if necessary, the brake fluid level.
Check the brake pedal travel (no extension), otherwise repeat the bleeding procedure.

CHECKING AND ADJUSTING VALUES : BRAKING SYSTEM

ESSENTIAL : Observe the safety and cleanliness recommendations .

1. Brake disc - Brake drum - Brake pads - Brake shoes

Refer to the method "Checking : Front brake disc - Rear brake disc - Rear brake drum - Brake pads - Brake shoes"

2. Vacuum pump

N.B. : Engine idling.

Vehicle	RELAY (U9)
Engine version	PUMA C P22DT
Oil temperature	80 ± 2°C

If the vacuum value is less than 900 mbars : Check :

- The vacuum pump
- The sealing of the vacuum pipe

3. Braking system compensator (Checking values)

Vehicle not affected.

4. Checking of the brake fluid

CAUTION : Brake fluid is highly corrosive to paintwork. If any is projected onto the bodywork, clean the surface immediately.

4.1. Tooling

Brake fluid tester (*)		
make	Reference	Type
SURETEST	TLF	Measures the boiling point of the brake fluid
DOW AUTOMOTIVE	BETATEST	
FACOM TOOLS	DF 16	
EBT	06.1	Measures the specific gravity of the brake fluid

(*) Non-exhaustive list, refer to the catalogue "Tools and Equipment".

4.2. Checking

Remove the brake fluid reservoir filter.

ESSENTIAL : Any contamination of the brake fluid is forbidden. The brake fluid should be clear and free from sediments or floating substances.

Check the fluid, following the instructions provided by the equipment supplier.

Checking values	
Brake fluid	Boiling point (minimum humidity)
DOT3	140 °C
DOT4	155 °C
DOT5	180 °C
DOT5.1	190 °C

N.B. : If the value checked is lower than the value for the "minimum humidity" boiling point, or within a tolerance of + 1(% of this value, replace the brake fluid (See the corresponding operation).

ESSENTIAL : Use only approved and recommended hydraulic fluids.

N.B. : The fluids DOT3, DOT4 and DOT5.1 are compatible.

CAUTION : The fluid DOT5 is not compatible with DOT3, DOT4 and DOT5.1.

TIGHTENING TORQUES : BRAKING SYSTEM

1. Front brake

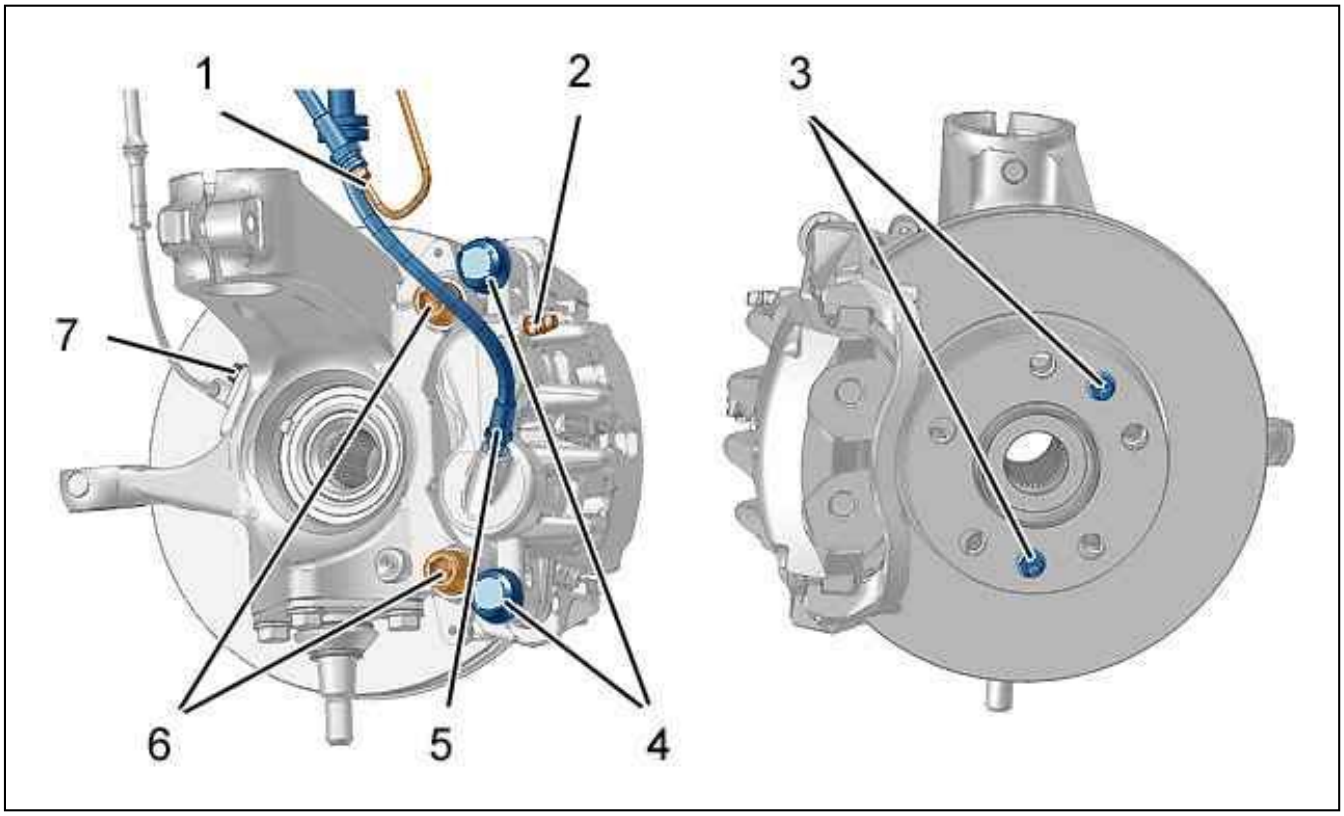

Figure : B3FP7N2D

Reference	Designation	Tightening torque
(1)	union - Brake pipe on hose	1,6 daNm
(2)	bleed screw(s)	1,8 daNm
(3)	bolts - Front brake disc	1,2 daNm
(4)	bolts - front brake caliper	3,4 daNm
(5)	union - Hose on caliper	1,6 daNm
(6)	bolts - Front brake caliper support	21 daNm
(7)	bolts - Front wheel sensor	0,8 daNm

2. Master cylinder + brake servo

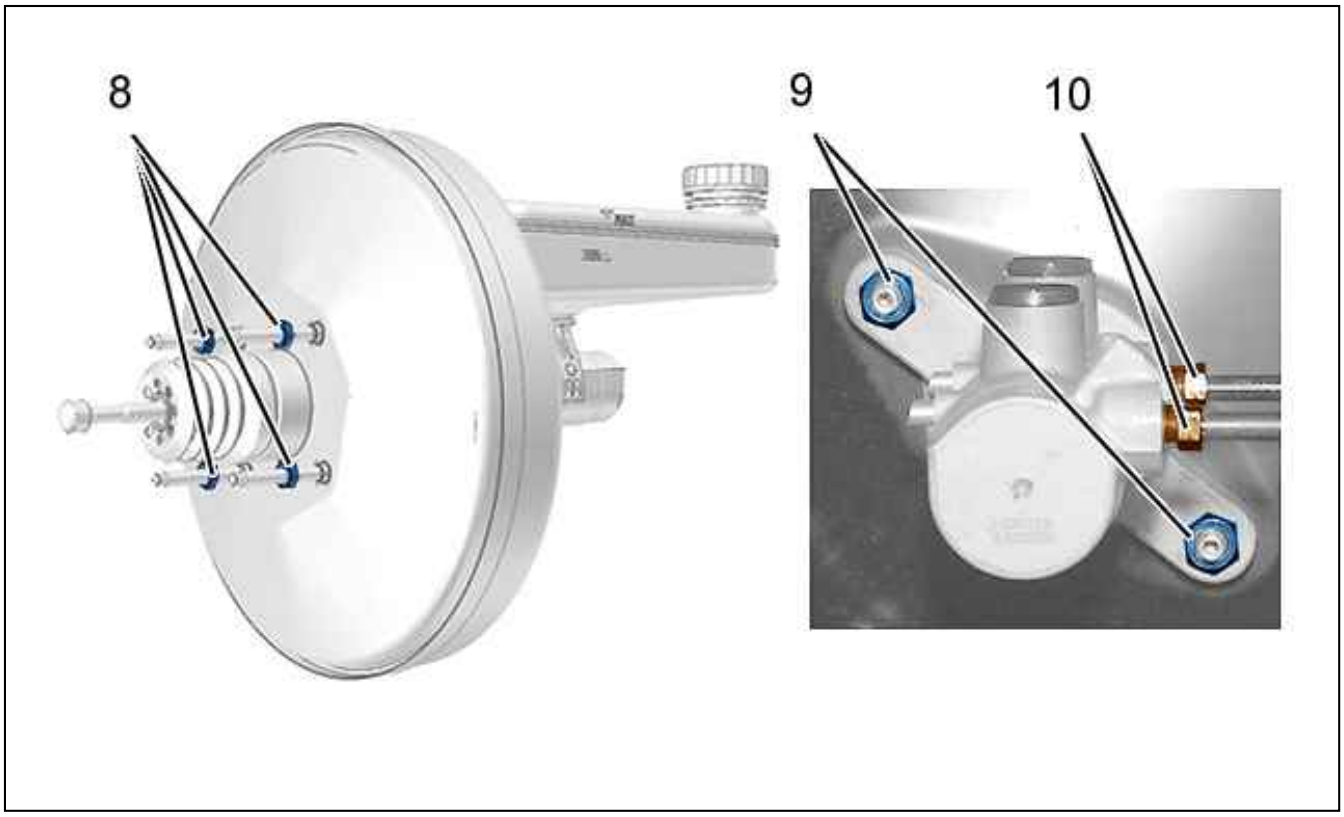

Figure : B3FP7N3D

Reference	Designation	Tightening torque
(8)	bolts - Brake servo on bulkhead	2,2 daNm
(9)	nuts - Master cylinder on brake servo	2 daNm
(10)	Connections	1,6 daNm

3. ABS/ESP hydraulic block

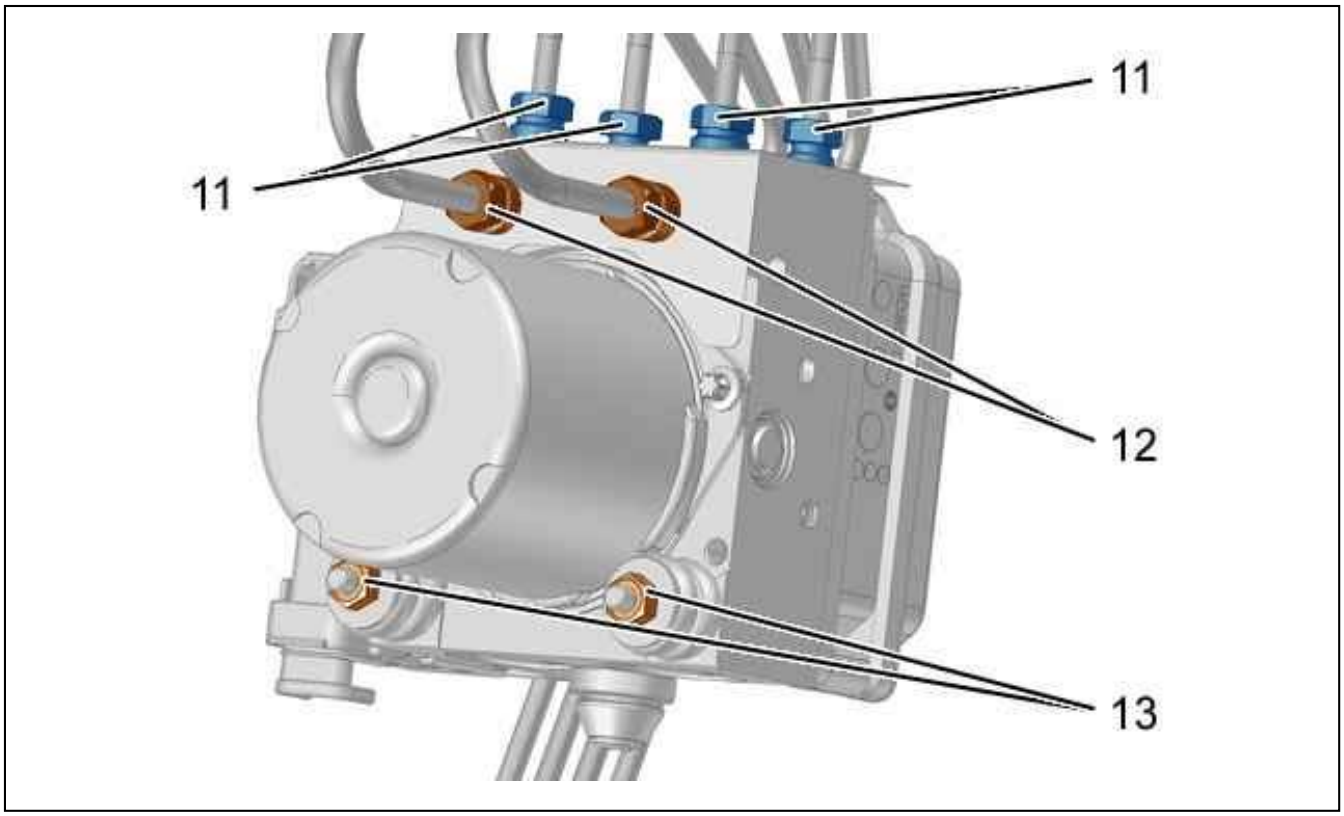

Figure : B3FP7N4D

Reference	Designation	Tightening torque
(11)	Connections	1,6 daNm
(12)	Connections	1,6 daNm
(13)	nuts - Hydraulic block on its support	0,8 daNm

4. Parking brake

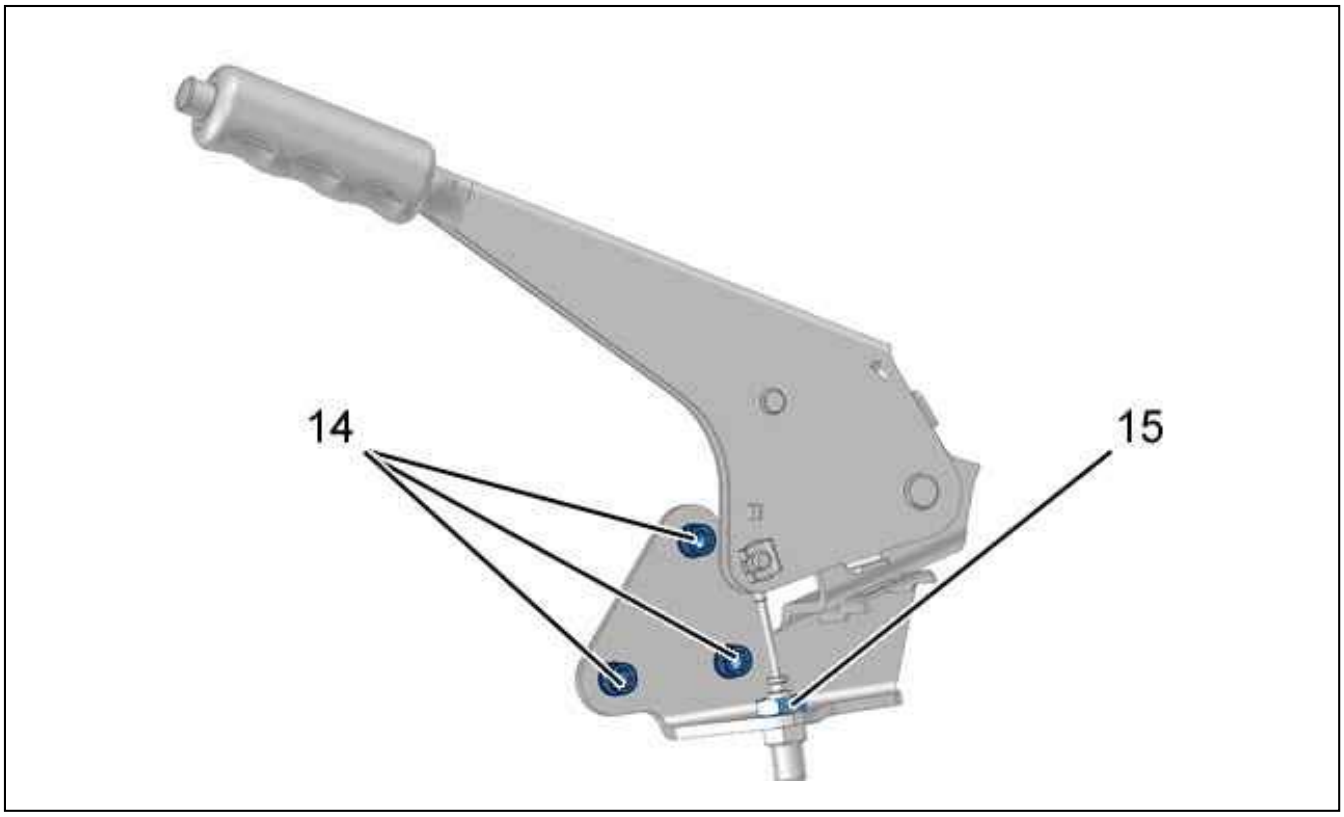

Figure : B3FP7N5D

Reference	Designation	Tightening torque
(14)	bolts - Handbrake lever	2 daNm
(15)	nut - Handbrake cable	3,5 daNm

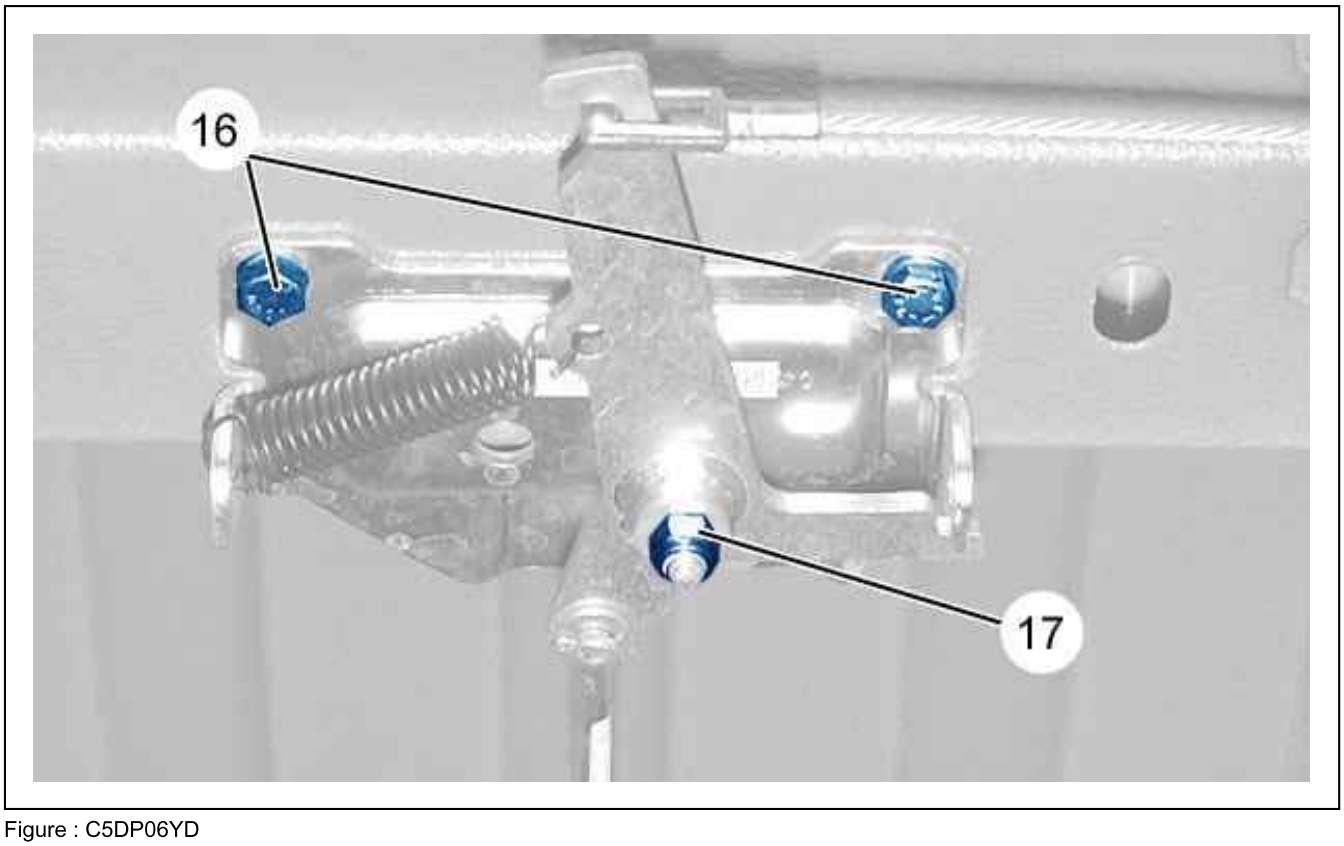

Figure : C5DP06YD

Reference	Designation	Tightening torque
(16)	bolts - Handbrake transfer plate	2 daNm
(17)	nut - Handbrake transfer lever	1,5 daNm

5. Rear brake

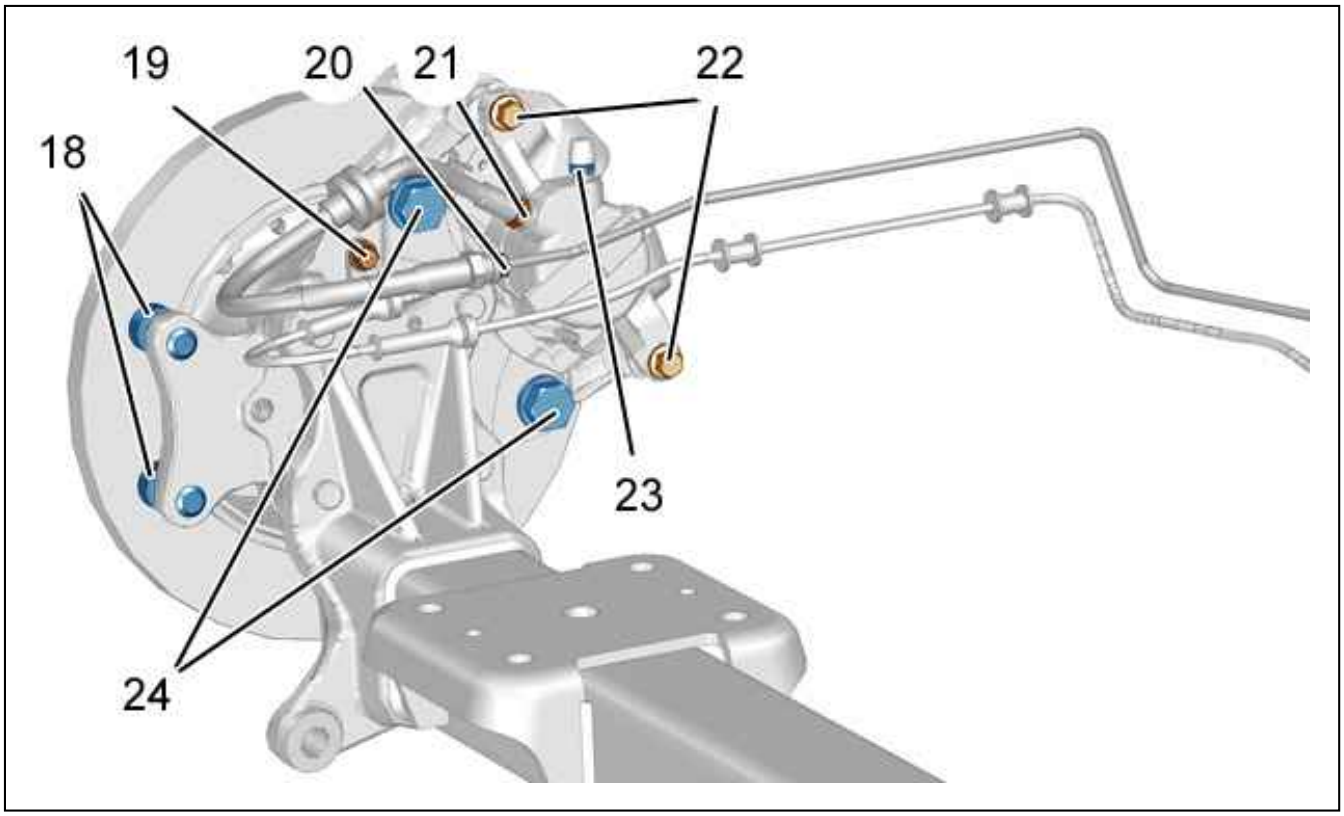

Figure : B3FP7N6D

Reference	Designation	Tightening torque
(18)	bolts - Handbrake shoes support	20 daNm
(19)	bolts - Rear wheel sensor	0,8 daNm
(20)	union - Brake pipe on hose	1,6 daNm
(21)	union - Hose on caliper	1,6 daNm
(22)	bolts - rear brake caliper	3 daNm
(23)	bleed screw(s)	1,8 daNm
(24)	bolts - Rear brake caliper yoke	16 daNm

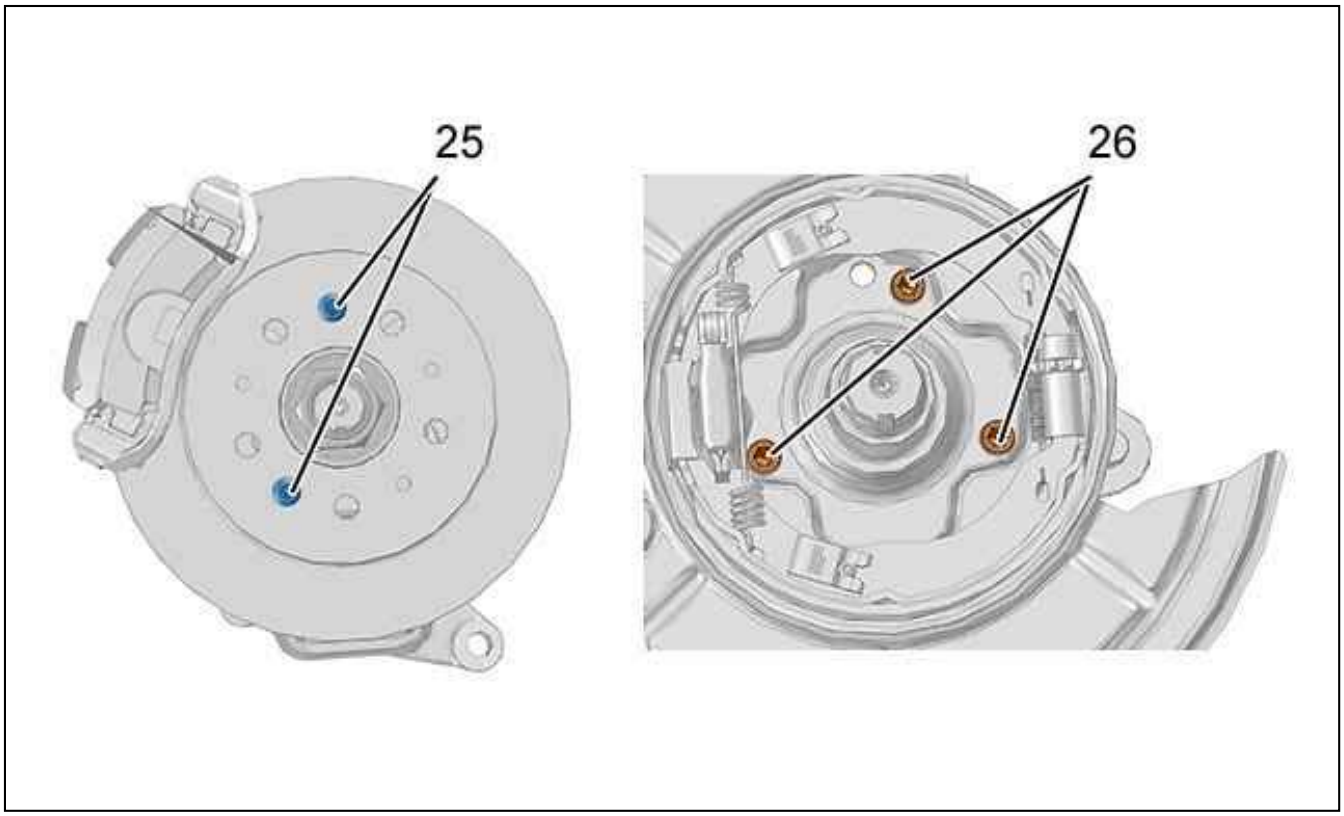

Figure : B3FP7N7D

Reference	Designation	Tightening torque
(25)	bolts - Rear brake disc	1,2 daNm
(26)	Handbrake on rear stub axle fixing	2,5 daNm

6. Gyrometer/accelerometer sensor

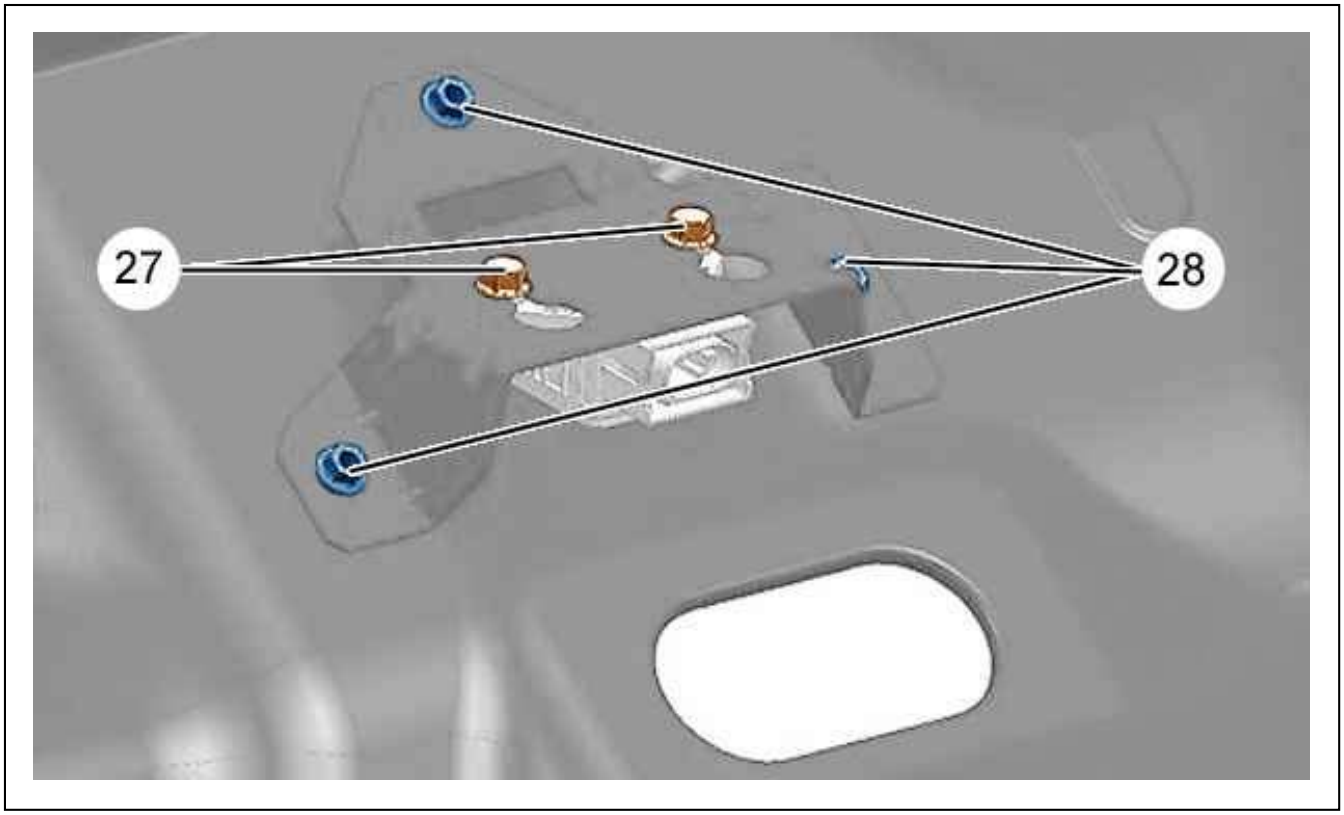

Figure : C5DP06ZD

Reference	Designation	Tightening torque
(27)	Accelerometer gyrometer sensor on support	0,6 daNm
(28)	Sensor support on body	0,6 daNm

7. Vacuum pump

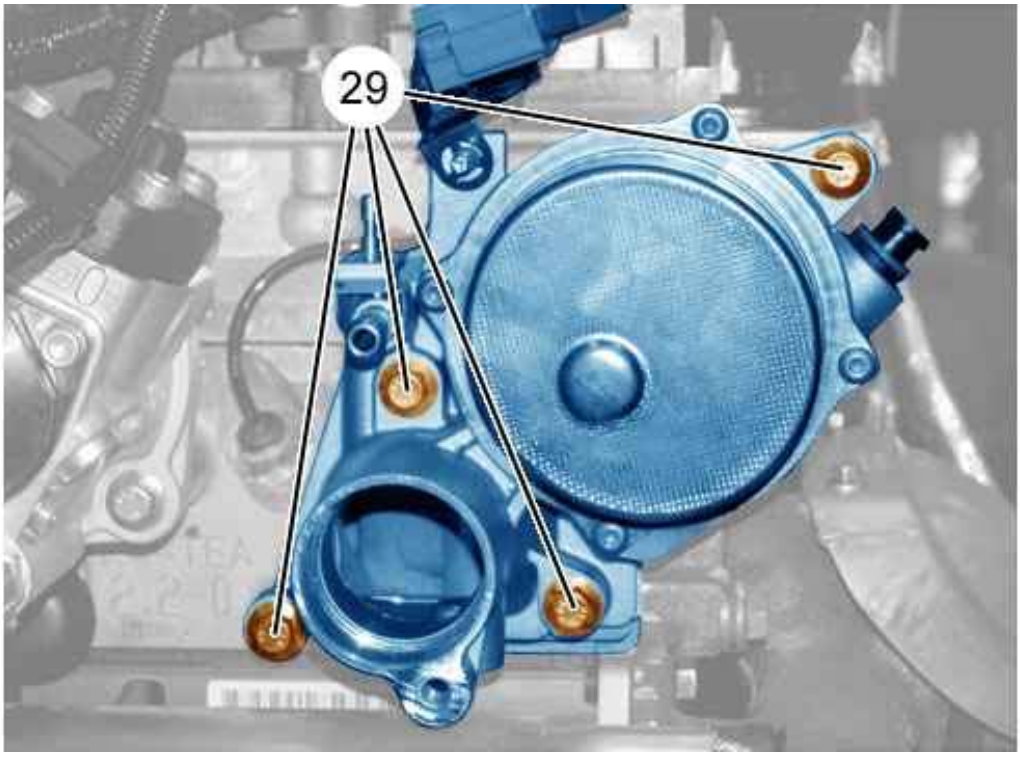

Figure : B3FB05YD

Reference	Designation	Tightening torque
(29)	Vacuum pump	2,2 daNm

CHECK : VACUUM PUMP

ESSENTIAL : Observe the safety and cleanliness recommendations .

1. Tooling

Tool	Reference	Designation
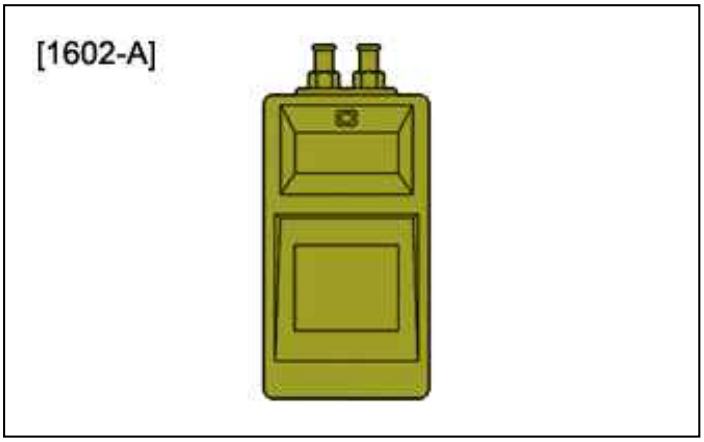 Figure : E5AB069T	[1602-A]	Pressure regulator
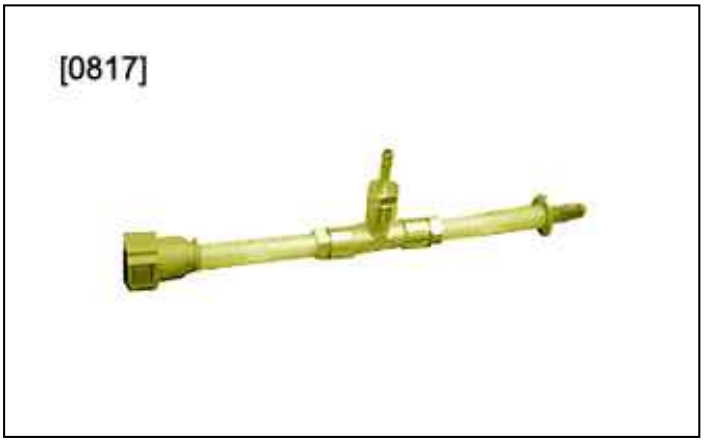 Figure : E5AD023T	[0817]	Union for checking the negative pressure of the braking assistance system
	[1604-E]	Connections

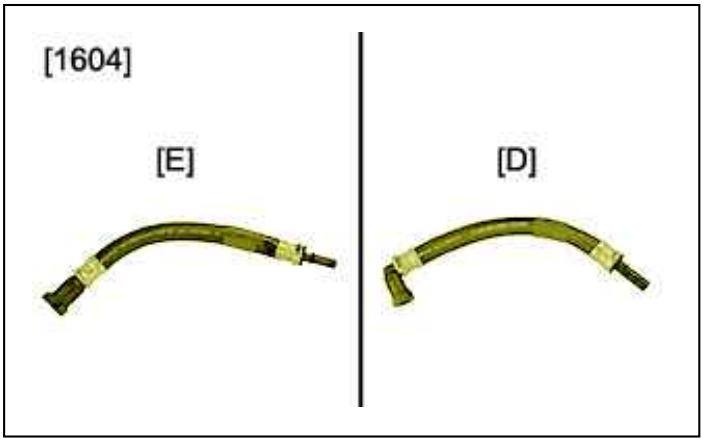

Figure : E5AD024T

[1604-D]	Connections

2. Setting up the equipment

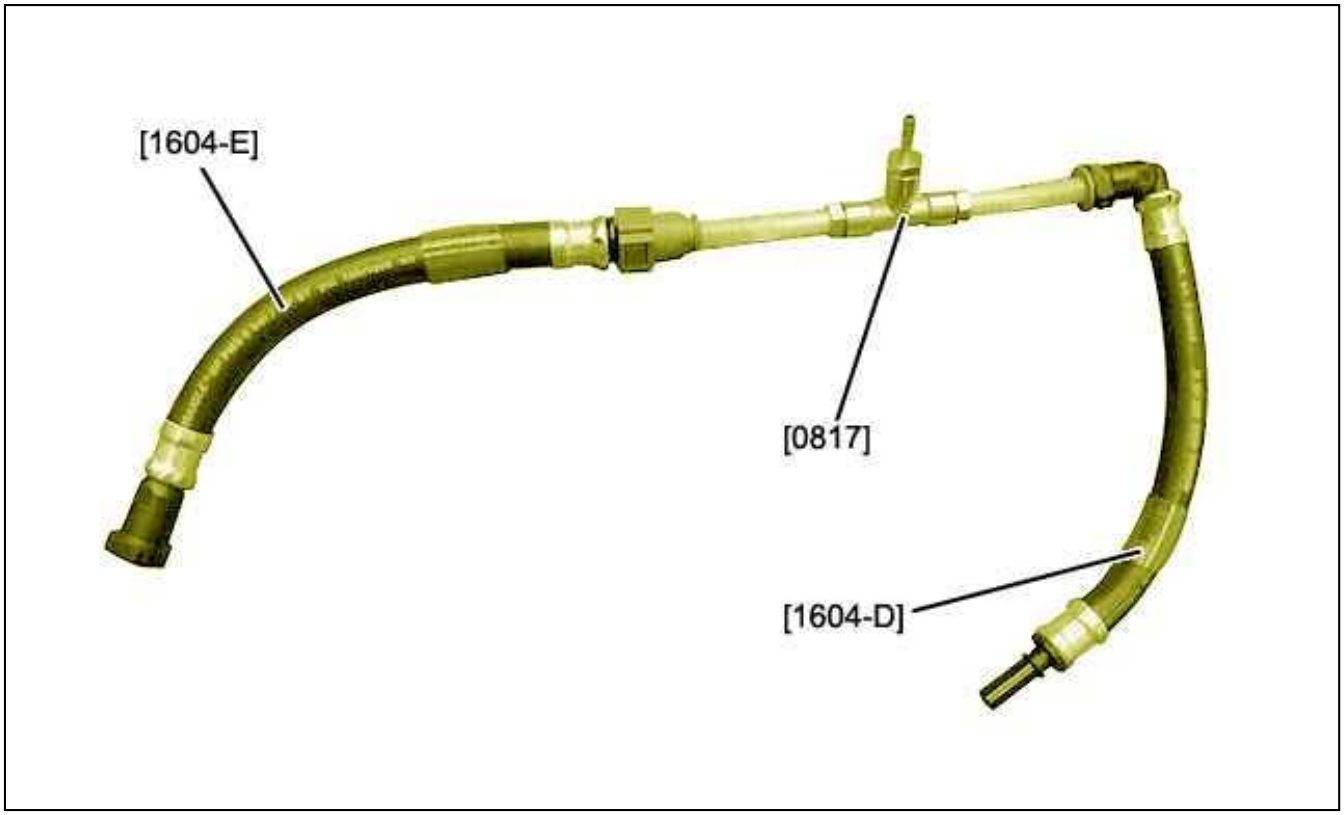

Figure : B3FD04GD

Prepare the checking assembly [0817]; [1604-D]; [1604-E].

3. Check

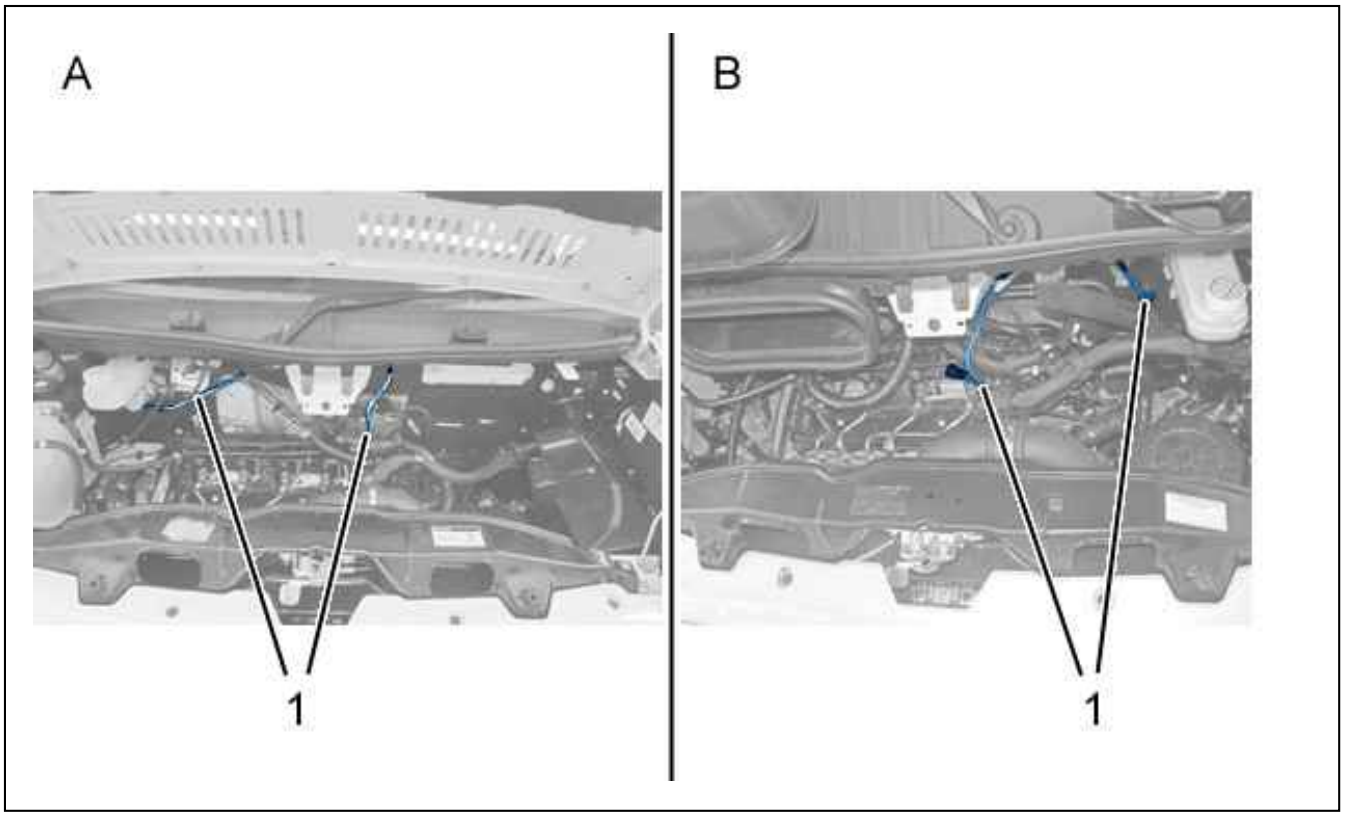

Figure : B3FD04HD

Fitting A : Right-hand drive .
Fitting B : Left-hand drive .
Locate the negative pressure pipe (1) between the vacuum pump and the brake servo.

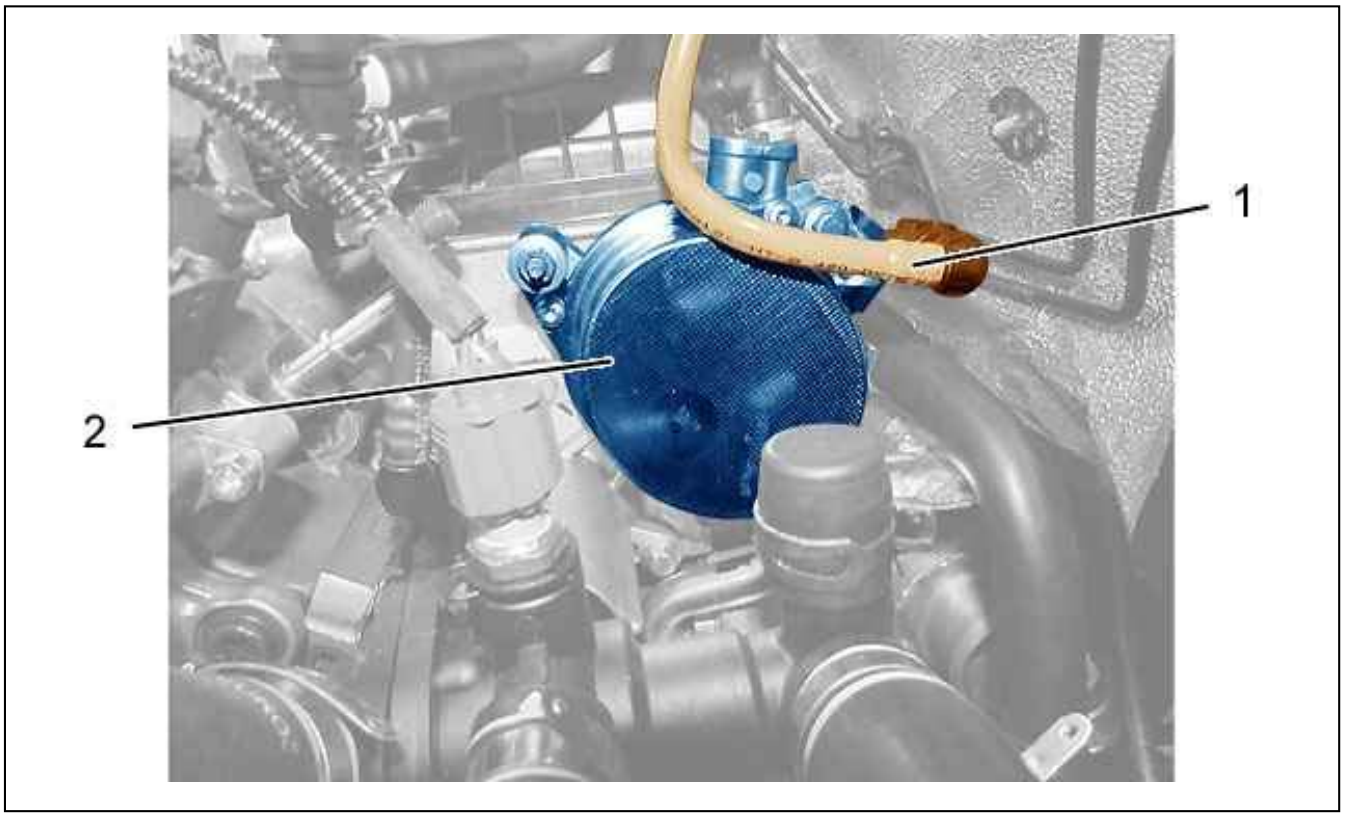

Figure : B3FD04ID

Uncouple : The vacuum pipe (1) of the vacuum pump (2).

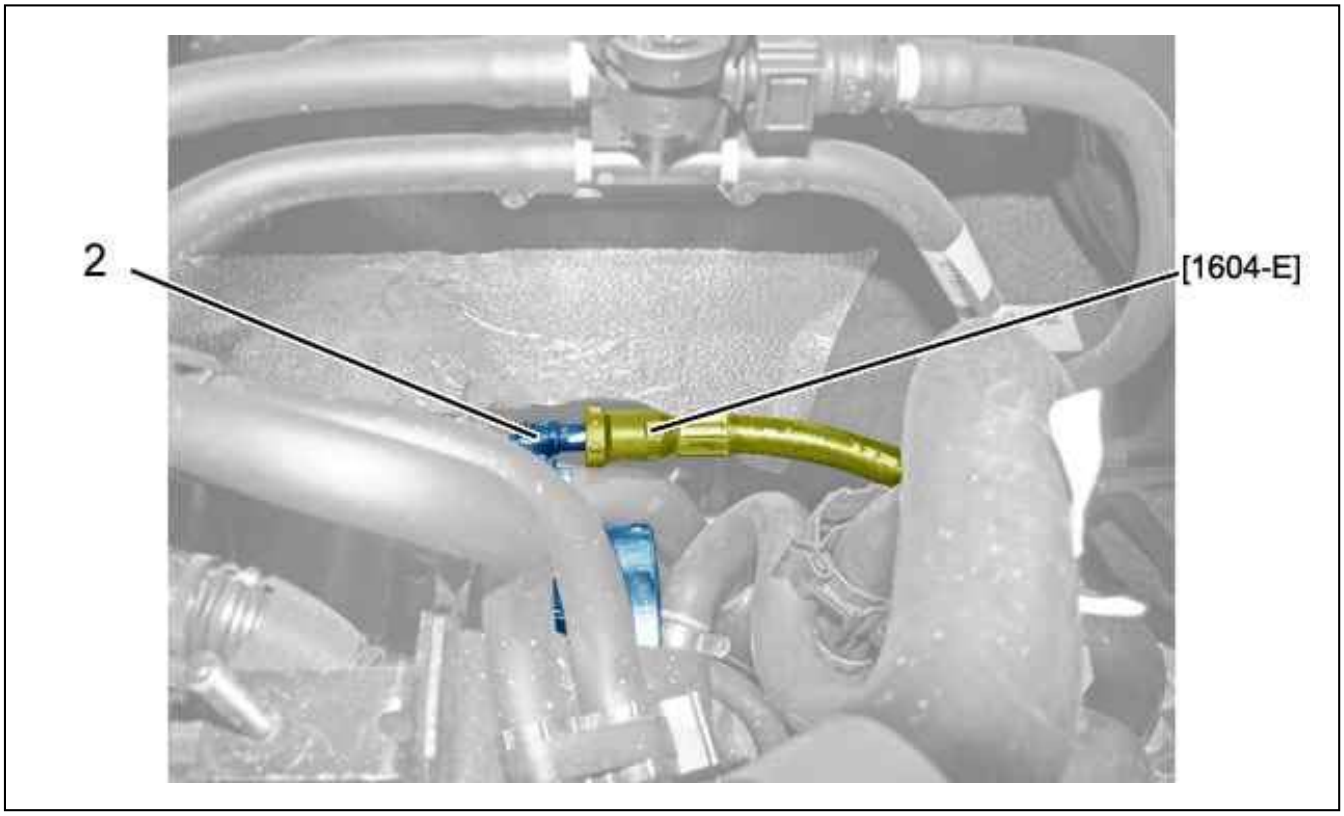

Figure : B3FD04JD

Connect the tool [1604-E] to the vacuum pump (2).

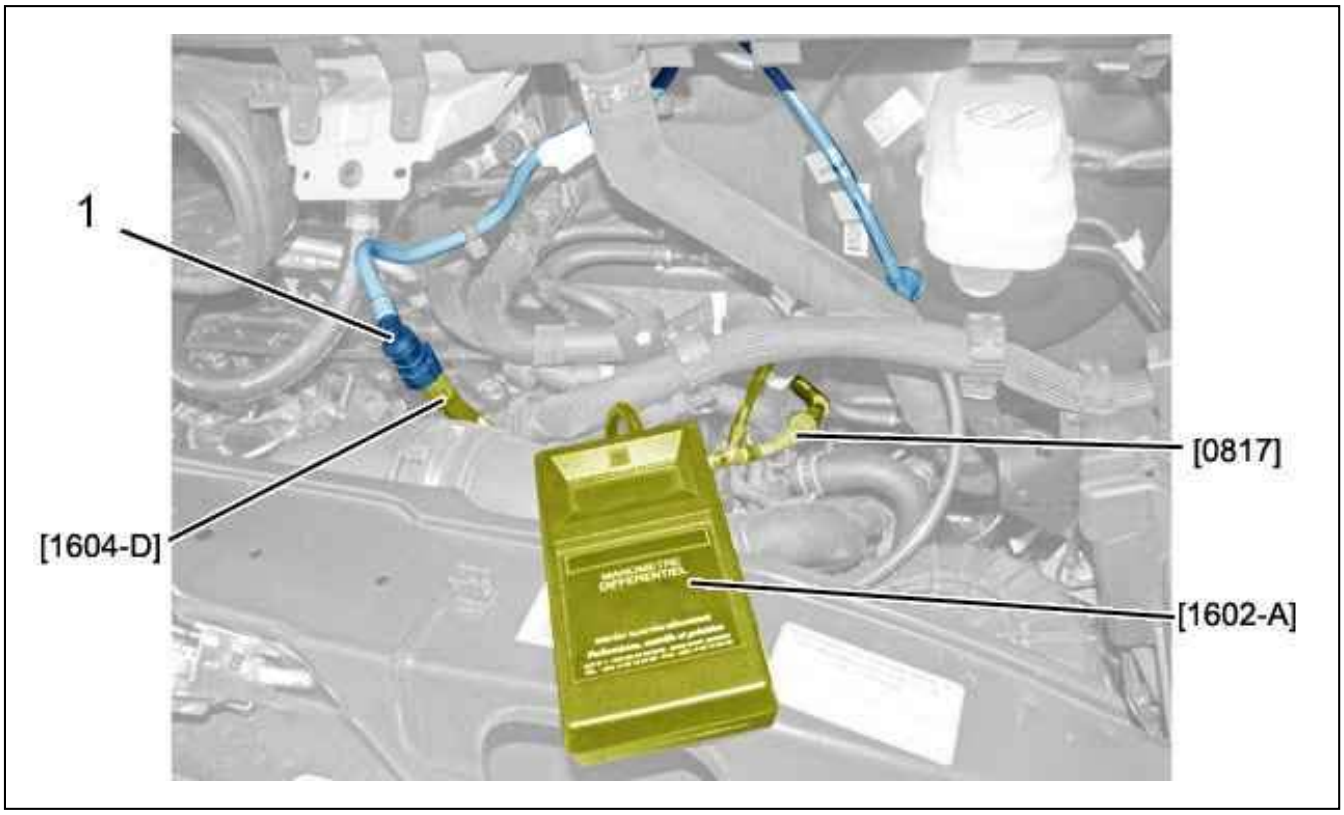

Figure : B3FD04KD

Connect tool [1604-D] to the vacuum pipe (1).
Connect tool [1602-A] to tool [0817].
Start the engine to run at idle.
Read the vacuum value.
Checking and adjusting values : Braking system .
If the value is outside the tolerance, check :

- The vacuum pump directly
- The sealing of the vacuum pipe (1)

Rectify (if necessary).
Remove the tools [1602-A], [0817], [1604-D], [1604-E].
Couple up :

- The vacuum pipe (1) on the vacuum pump (2)
- The vacuum pipe (1) on the braking amplifier

CHECKING : BRAKING SYSTEM (TECHNICAL NOTE)

ESSENTIAL : Observe the safety and cleanliness recommendations .

1. Foreword

This document describes a brake wear checking method, it can be printed, as can the associated methods, at the request of the customer.

2. Tooling

CAUTION : The kit [0805] is not available from replacement parts. As a replacement, a dial gauge magnetic suppor can be used which will guarantee the measurements.

Equipment : Dial gauge magnetic support .

Tool	Reference	Designation
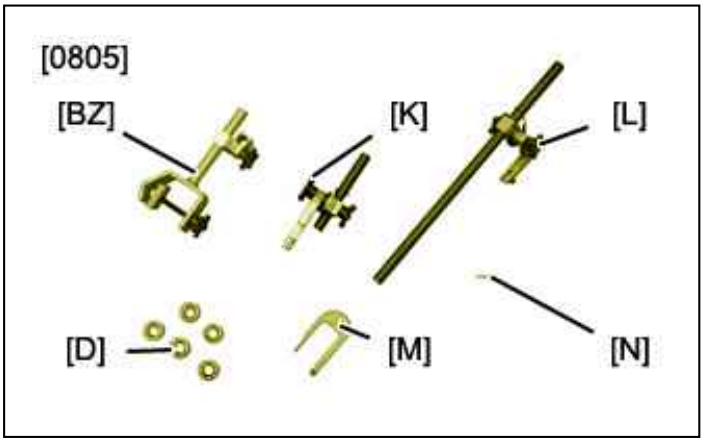 Figure : E5AB1CCT	[0805]	Disc/hub run-out checking tool
	[0805-BZ]	caliper
	[0805-K]	Disc check bracket + Ventilated disc fork
	[0805-L]	Disc check bracket
	[0805-D]	Non-ventilated disc fork
	[0805-M]	Spacer
	[0805-N]	dial gauge extension
 Figure : E5AB1CDT	[2437-T]	Dial gauge
	[0821]	Set of shims

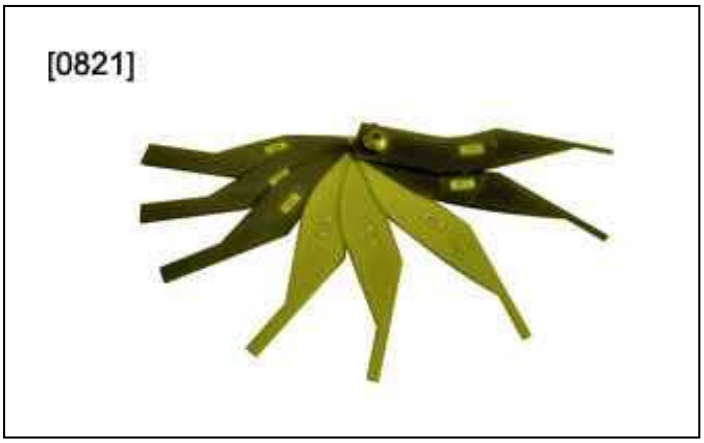

Figure : E5AB1JZT

3. Front brake disc

Check the tightening torques of the wheels.
Raise and support the vehicle on a 2 -post lift.

3.1. Checking the brake disc run-out (wheel fitted) (First possibility)

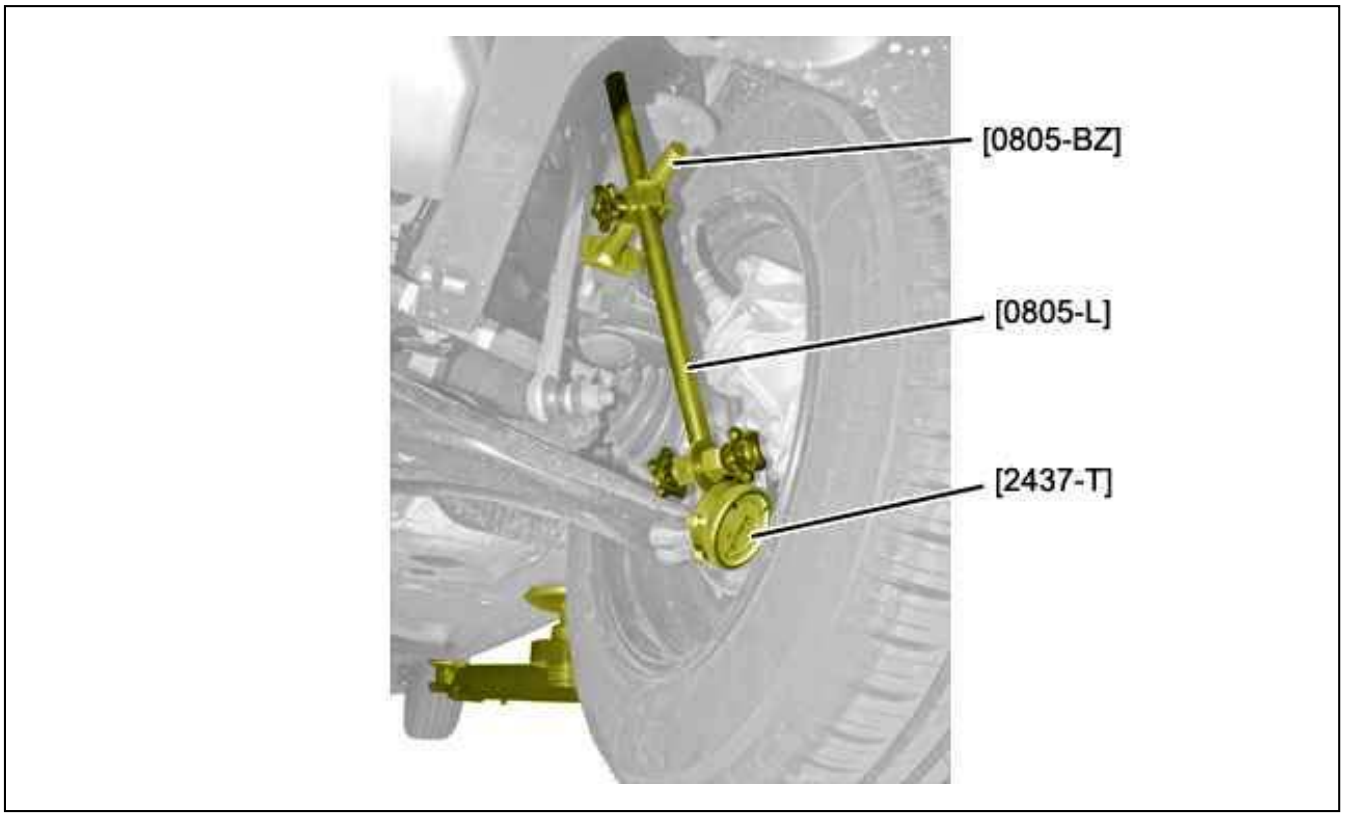

Figure : B3FD05CD

Fix :

- The assembly [0805-BZ], [0805-L] on the damper
- The dial gauge [2437-T] on the tool [0805-L]

Place the tip of the dial gauge [2437-T] in contact 10 mm from the periphery of the brake disc (the tip under the action o the spring).

CAUTION : To check the front brake disc run-out, turn the disc by means of the driveshaft.

Carry out :

- A dial gauge zero reset
- A full turn of the brake disc

Permissible brake disc assembly run-out on the hub : Less than 0,05 mm.

3.2. Checking the brake disc run-out (wheel fitted) (Second possibility)

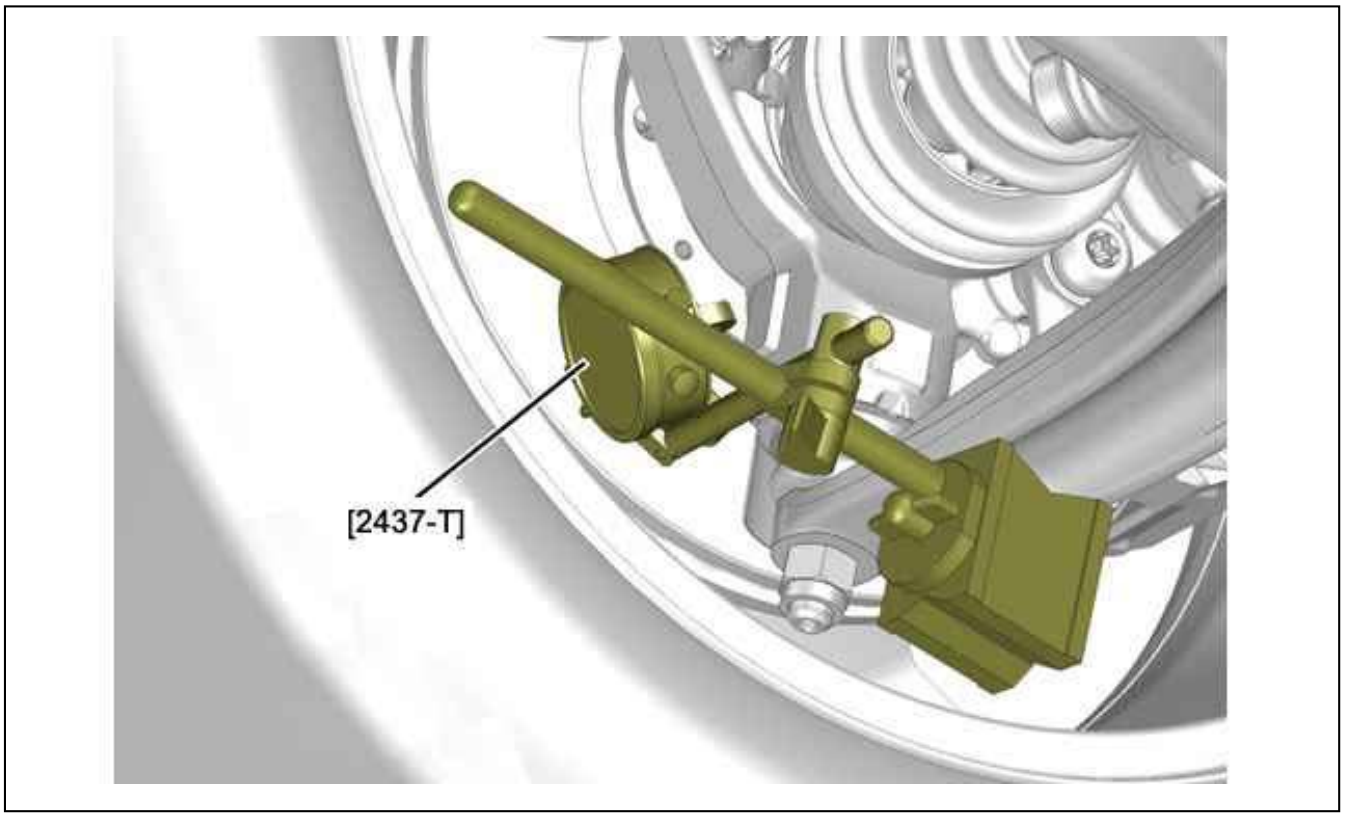

Figure : B3FD05DD

Fix the magnetic support on the lower suspension arm.
Fix the dial gauge [2437-T] on the magnetic support .
Place the tip of the dial gauge [2437-T] in contact 10 mm from the periphery of the brake disc (the tip under the action o
the spring).

CAUTION : To check the front brake disc run-out, turn the disc by means of the driveshaft.

Carry out :

- A dial gauge zero reset
- A full turn of the brake disc

Permissible brake disc assembly run-out on the hub : Less than 0,05 mm.

3.3. Checking the variation in the thickness of the brake disc (Wheel removed) (First possibility)

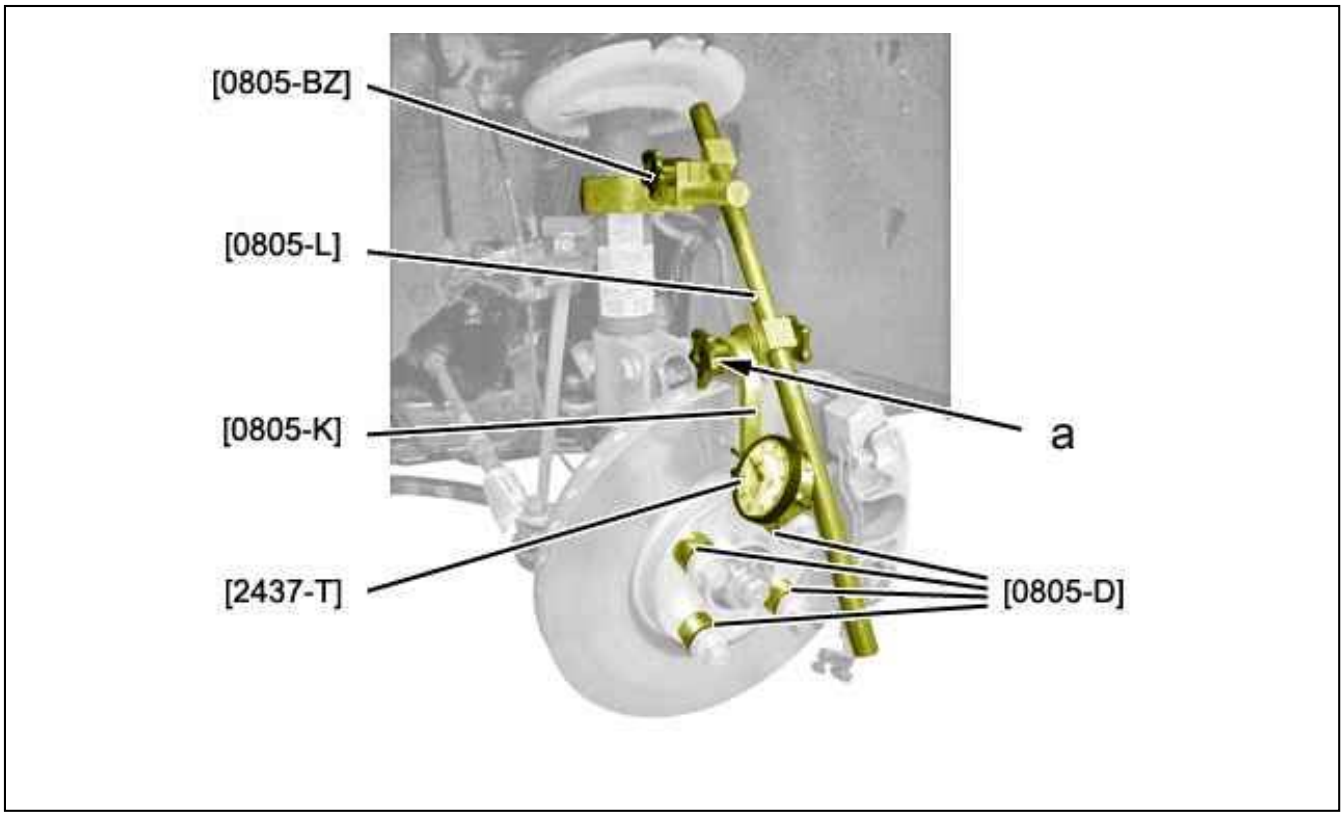

Figure : B3FD05ED

Refit and tighten the wheel bolts fitted with the tool [0805-D].
Fix :

- The assembly [0805-BZ], [0805-L] on the damper
- The dial gauge [2437-T] on the tool [0805-K]

Loosen the tool [0805-K] (at "a").
Place the tip of the dial gauge [2437-T] in contact 5 mm from the periphery of the brake disc (the tip under the action of the spring).

CAUTION : To check the variation in the thickness of the front brake disc, turn the brake disc by means of the driveshaft.

Carry out :

- A dial gauge zero reset
- A full turn of the brake disc

Permissible variation in the thickness of the brake disc over the same circumference 0,01 mm.

3.4. Checking the variation in the thickness of the brake disc (Wheel removed) (Second possibility)

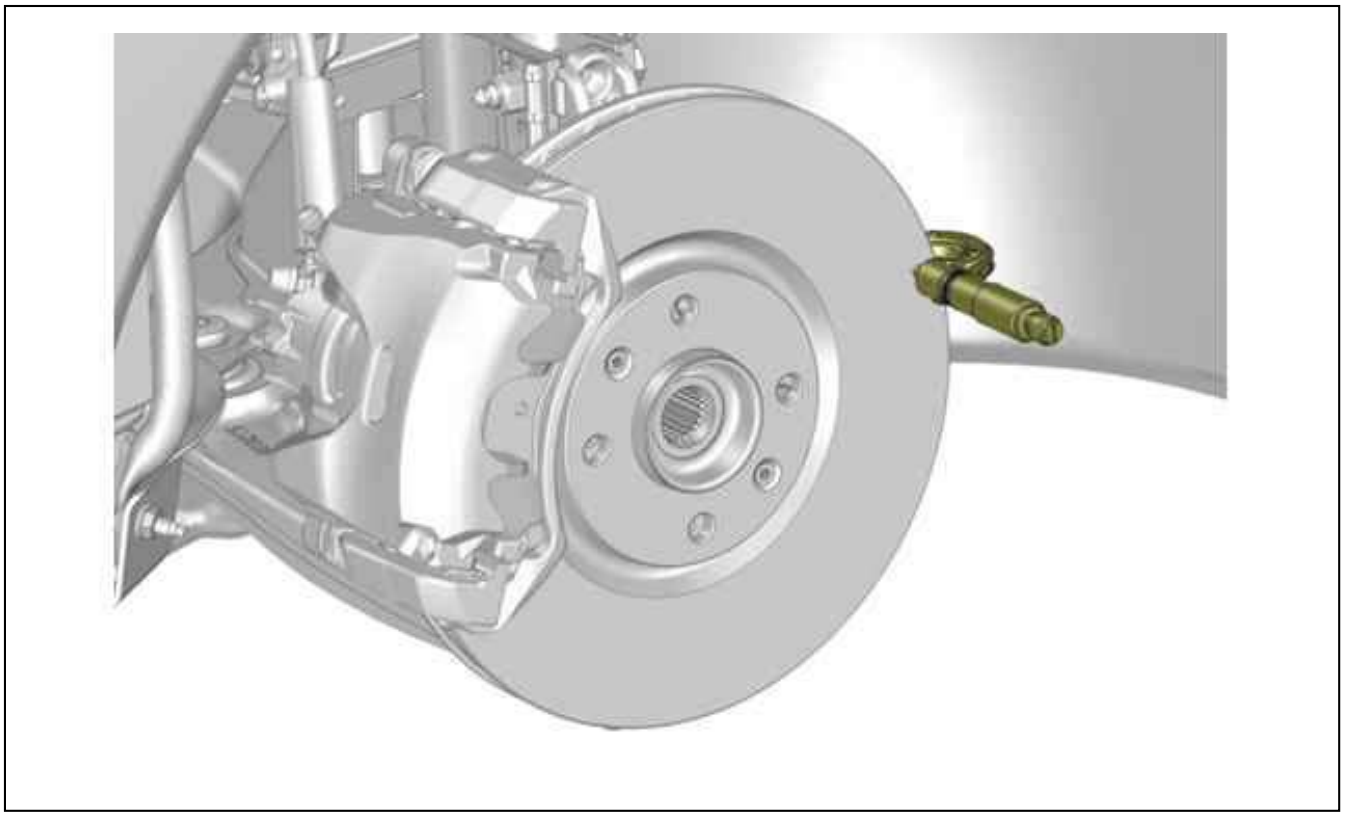

Figure : B3FD05FD

Check the variation in the thickness over the circumference of the brake disc at eight points 5 mm from the periphery of the brake disc ; Using a micrometer (Capacity: 0 - 50 mm).
Permissible variation in the thickness of the brake disc over the same circumference 0,01 mm.

3.5. Checking the thickness of the front brake disc (wheel removed)

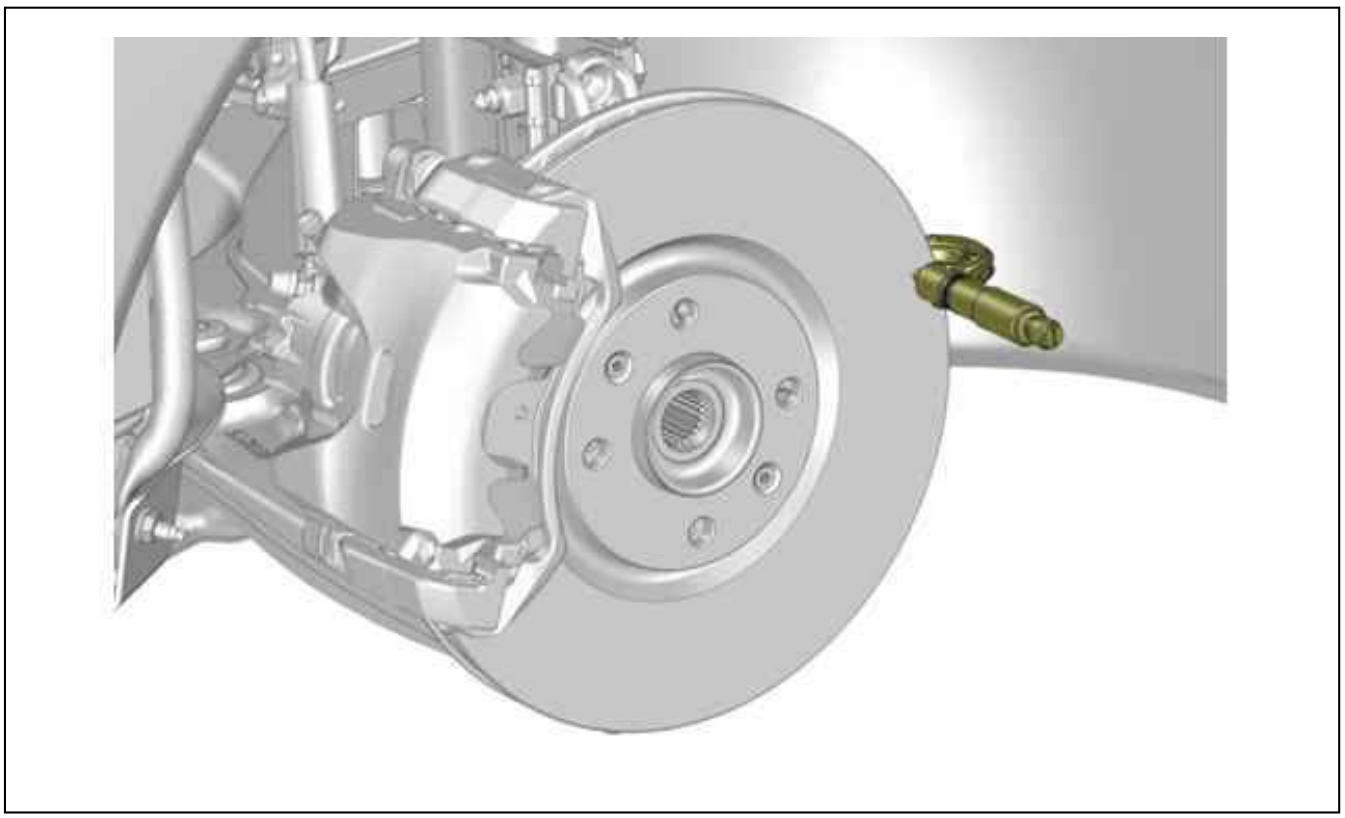

Figure : B3FD05FD

Measure the thickness of the brake discs on the friction surfaces ; Using a micrometer (Capacity: 0 - 50 mm). See the table below.

Front discs			
Special feature	Nominal diameter of a new disc	Thickness of a new disc	Minimum permitted thickness
Solid disc	247 mm	10 mm	8 mm
	247 mm	13 mm	11 mm
	266 mm	13 mm	11 mm
Ventilated disc	247 mm	20,4 mm	18,4 mm
	257 mm	20,4 mm	18,4 mm
	257 mm	22 mm	20 mm
Ventilated disc (C-Zero)	257 mm	17 mm	15,4 mm
Ventilated disc	266 mm	20,4 mm	18,4 mm
	266 mm	22 mm	20 mm
	280 mm	24 mm	22 mm
	280 mm	28 mm	26 mm
	281 mm	26 mm	24 mm
	283 mm	26 mm	24 mm
	284 mm	22 mm	20,2 mm
	285 mm	28 mm	26 mm
	288 mm	28 mm	26 mm
	294 mm	24 mm	22,4 mm
	294 mm	26 mm	24,4 mm
	300 mm	24 mm	22 mm
	300 mm	32 mm	30 mm
	302 mm	26 mm	24 mm
	304 mm	28 mm	26 mm
	309 mm	32 mm	30 mm
	310 mm	32 mm	30 mm
	330 mm	30 mm	28 mm
	340 mm	30 mm	28 mm

4. Front hub

4.1. Checking the run-out : First possibility

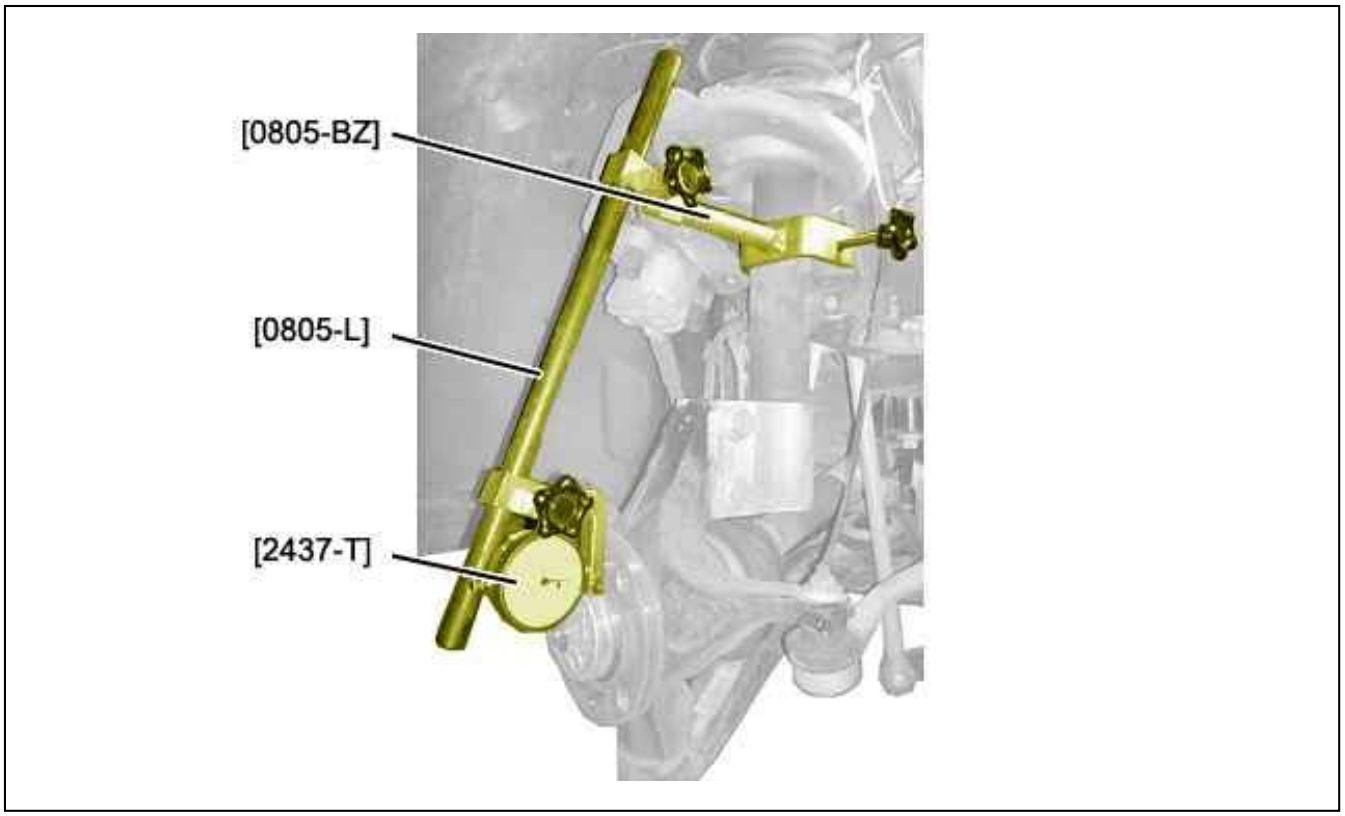

Figure : B3FD05ID

Check the tightening torque of the driveshaft nut.
Use an abrasive cloth to clean the contact surface of the brake hub/disc.
Fix :

- The assembly [0805-BZ], [0805-L] on the damper
- The dial gauge [2437-T] on the tool [0805-L]

Place the tip of the dial gauge [2437-T] in contact as close as possible to the outer edge of the front hub (the tip under the action of the spring).

CAUTION : To check the run-out of the front hub, turn the hub by means of the driveshaft.

Carry out :

- A dial gauge zero reset
- A complete revolution of the front hub

Permissible run-out of the front hub : Less than 0,013 mm.

4.2. Checking the run-out : Second possibility

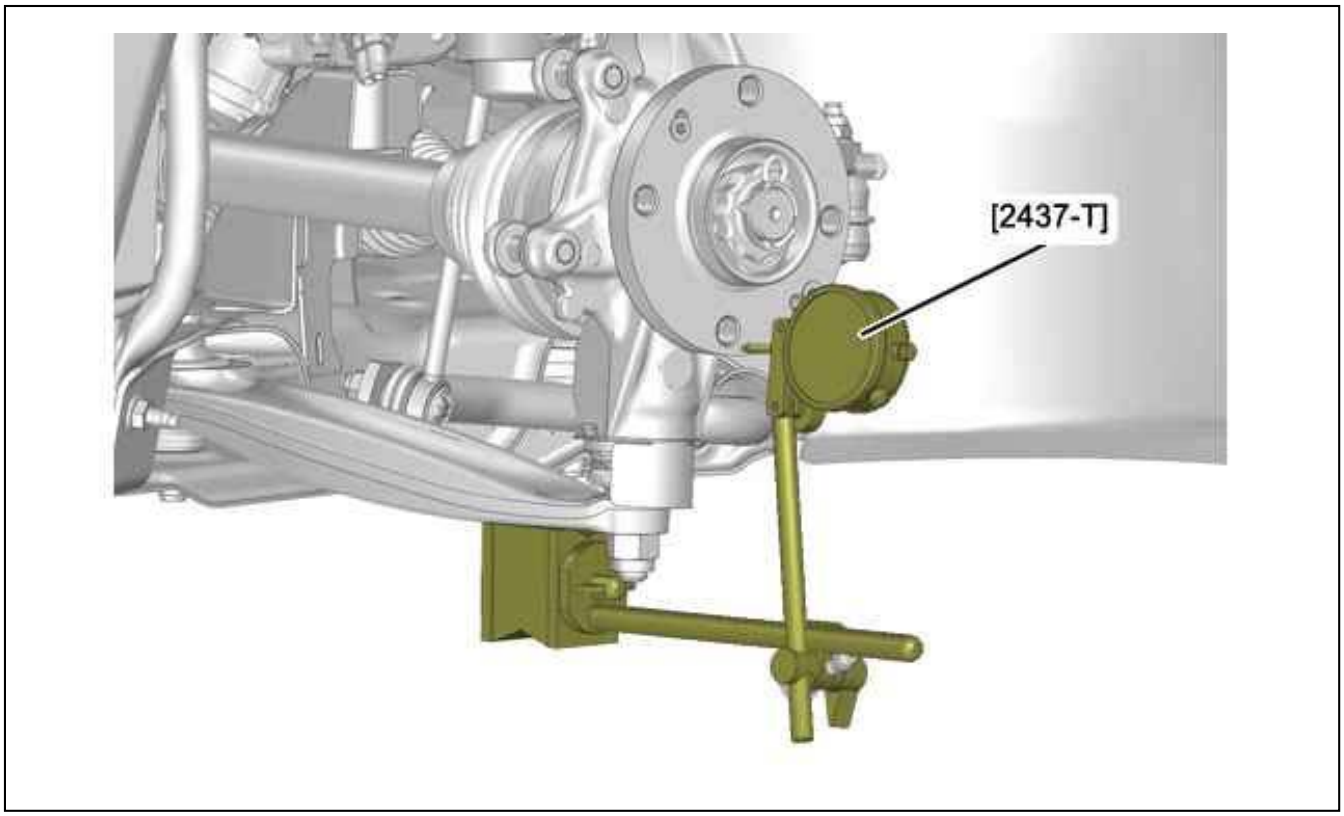

Figure : B3FD05JD

Fix :

- The magnetic support on the lower suspension arm
- The dial gauge [2437-T] on the magnetic support

Place the tip of the dial gauge [2437-T] in contact as close as possible to the outer edge of the front hub (the tip under the action of the spring).

CAUTION : To check the run-out of the front hub, turn the hub by means of the driveshaft.

Carry out :

- A dial gauge zero reset
- A complete revolution of the front hub

Permissible run-out of the front hub : Less than 0,013 mm.

5. Checking the thickness of the rear brake disc (wheel removed)

Slacken the parking brake .

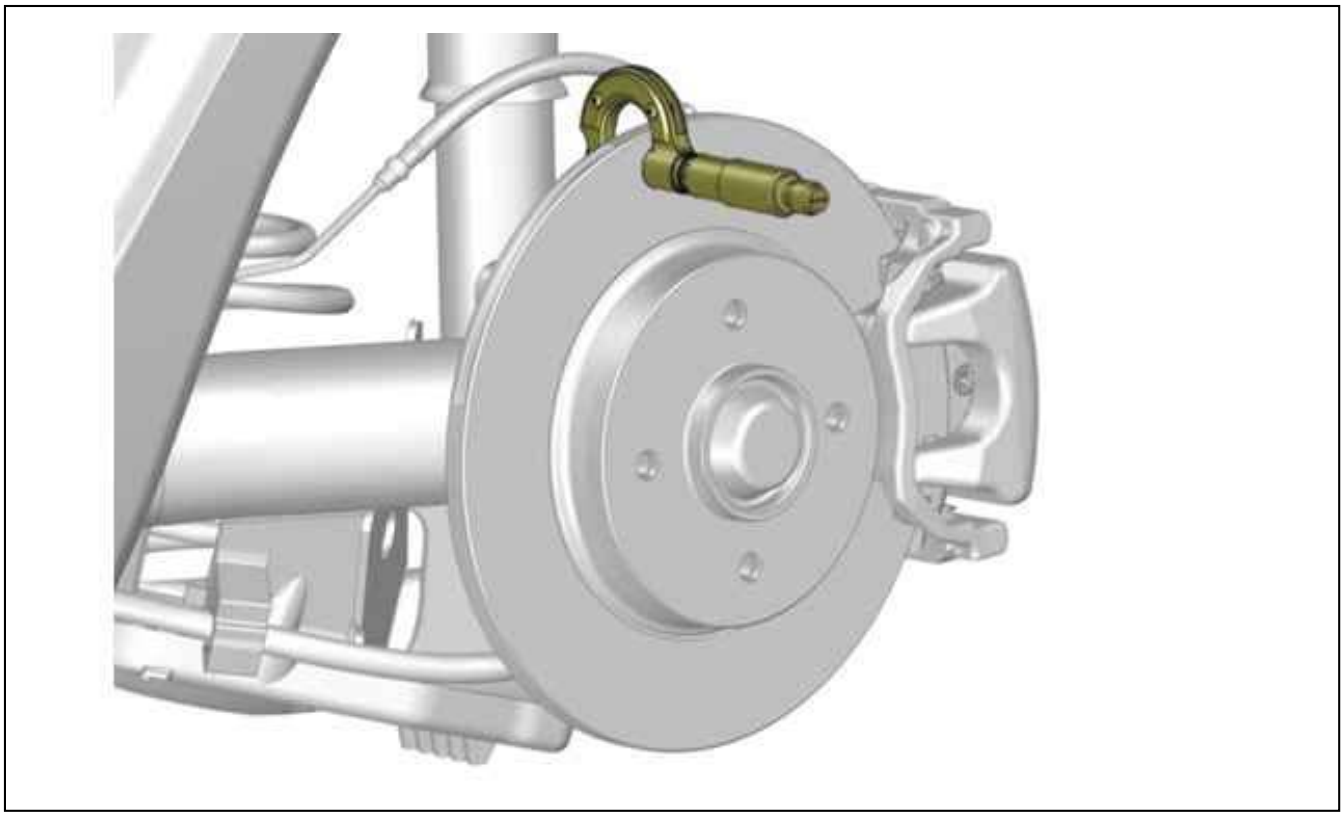

Figure : B3FD05KD

Measure the thickness of the brake discs on the friction surfaces ; Using a micrometer (Capacity: 0 - 50 mm). See the table below.

Rear discs			
Special feature	Nominal diameter of a new disc	Thickness of a new disc	Minimum permitted thickness
Solid disc	247 mm	8 mm	6 mm
Solid disc hub	249 mm	9 mm	7 mm
	268 mm	12 mm	10 mm
Solid disc	272 mm	12 mm	10 mm
	274 mm	14 mm	12 mm
	280 mm	16 mm	14 mm
	290 mm	10 mm	8 mm
	290 mm	12 mm	10 mm
	290 mm	14 mm	12 mm
	300 mm	16 mm	14 mm
	302 mm	10 mm	8,4 mm
Ventilated disc	302 mm	22 mm	20 mm

6. Rear brake drum check

Slacken the parking brake .
Remove :

- The wheel
- The brake drum

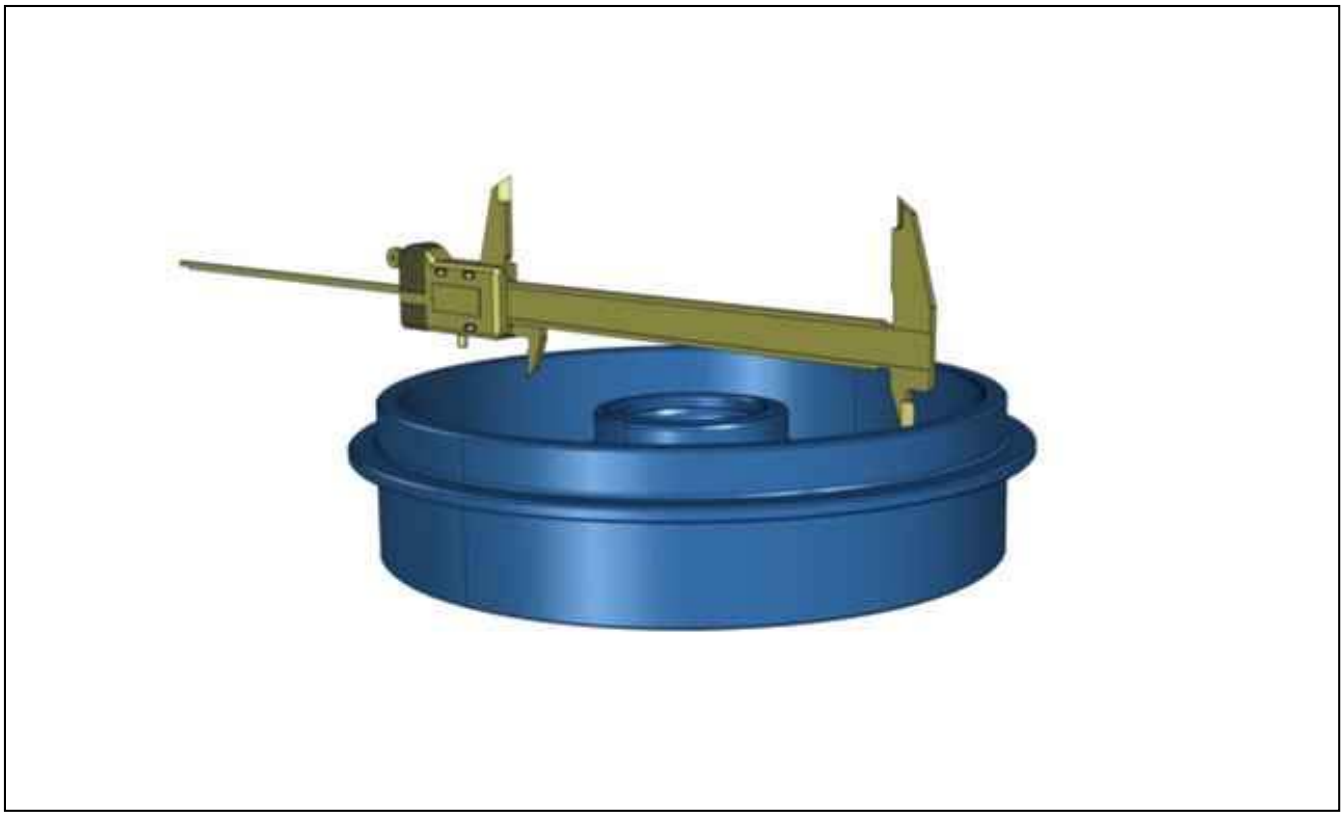

Figure : B3FD05LD

Measure the internal diameter of the brake drums on the friction surface ; Using sliding calipers .
See the table below.

Rear brake drum		
Drum	Nominal diameter of a new drum	Maximum permitted diameter
7’’	180 mm	182 mm
8’’	203 mm	204,4 mm
8" (C-Zero)	203 mm	205 mm
9’’	228,6 mm	229,8 mm
10’’	254,15 mm	256 mm

Refit :

- The brake drum
- The wheel

7. Check of the thickness of the brake pad linings and brake shoe linings

Check the wear of the brake pads : Using tool [0821].

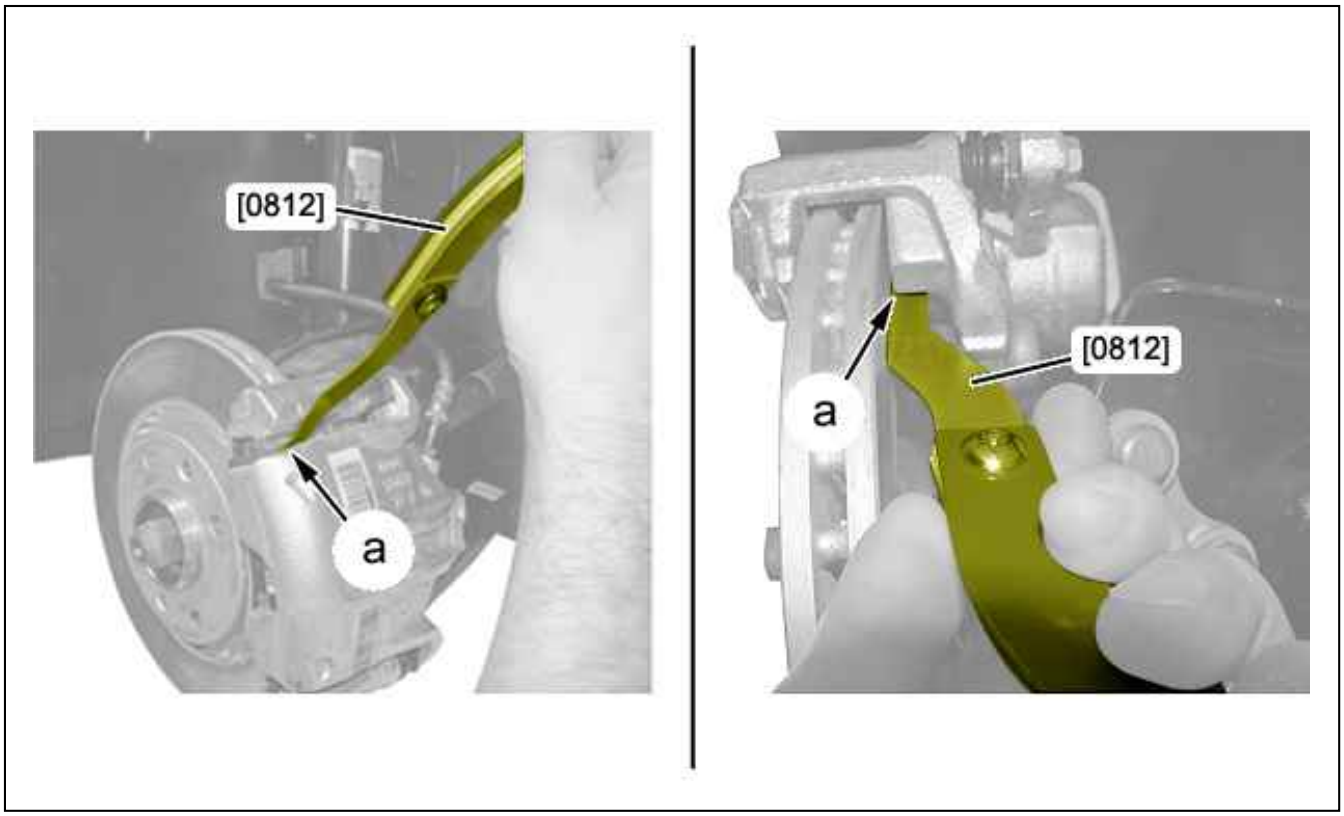

Figure : B3FD05UD

N.B. : Take several measurements at the points accessible using the tool [0821] (inside and outside) : For example a "a".

Vehicle	Minimum thickness of the brake pad linings (front)	Minimum thickness of the brake pad linings (rear)	Minimum thickness of the brake shoe linings
C-ZERO (S4)	2 mm	-	1 mm
C1 (B0)	1 mm	-	1 mm
C2 (A6)	2 mm	2 mm	1 mm
C3 (A8)			
C3 (A31)			
C3 Pluriel (A42)			
C3 (A51)			
DS3 (A55)			
C3 PICASSO (A58)	2 mm	2 mm	-
C-ELYSEE (M43)	2 mm	-	1 mm
C4 (B53)	2 mm	2 mm	-
C4 PICASSO (B58)			
C4 PICASSO B78			
C4 (B7) -DS4			
C QUATRE L Russia (B7R)			
CITROEN C5 (X3)	2 mm	2 mm	1 mm
CITROEN C5 (X4)			
CITROEN C5 (X7)	3 mm	3 mm	-

CITROEN C5 (XW)			
DS5 (B81)	2 mm	2 mm	-
C6 (X6)	2 mm	2 mm	-
C8(VV)	3 mm	2 mm	-
C4 Aircross (J4)	2 mm	2 mm	1 mm
C-Crosser (I4)	2 mm	2 mm	1 mm
NEMO (MCV)	2 mm	2 mm	1 mm
BERLINGO (M49)	2 mm	-	1 mm
BERLINGO (M59)	2 mm	-	1 mm
BERLINGO (B9)	2 mm	2 mm	1 mm
DISPATCH - SYNERGIE (U6)			
JUMPY 3 (G9)			
JUMPER 2 (U5)	2 mm	2 mm	1 mm
JUMPER 3 (U9)	2 mm	2 mm	1 mm

CHECK : REAR BRAKE DISCS

ESSENTIAL : Observe the safety and cleanliness recommendations.

1. Recommended tools

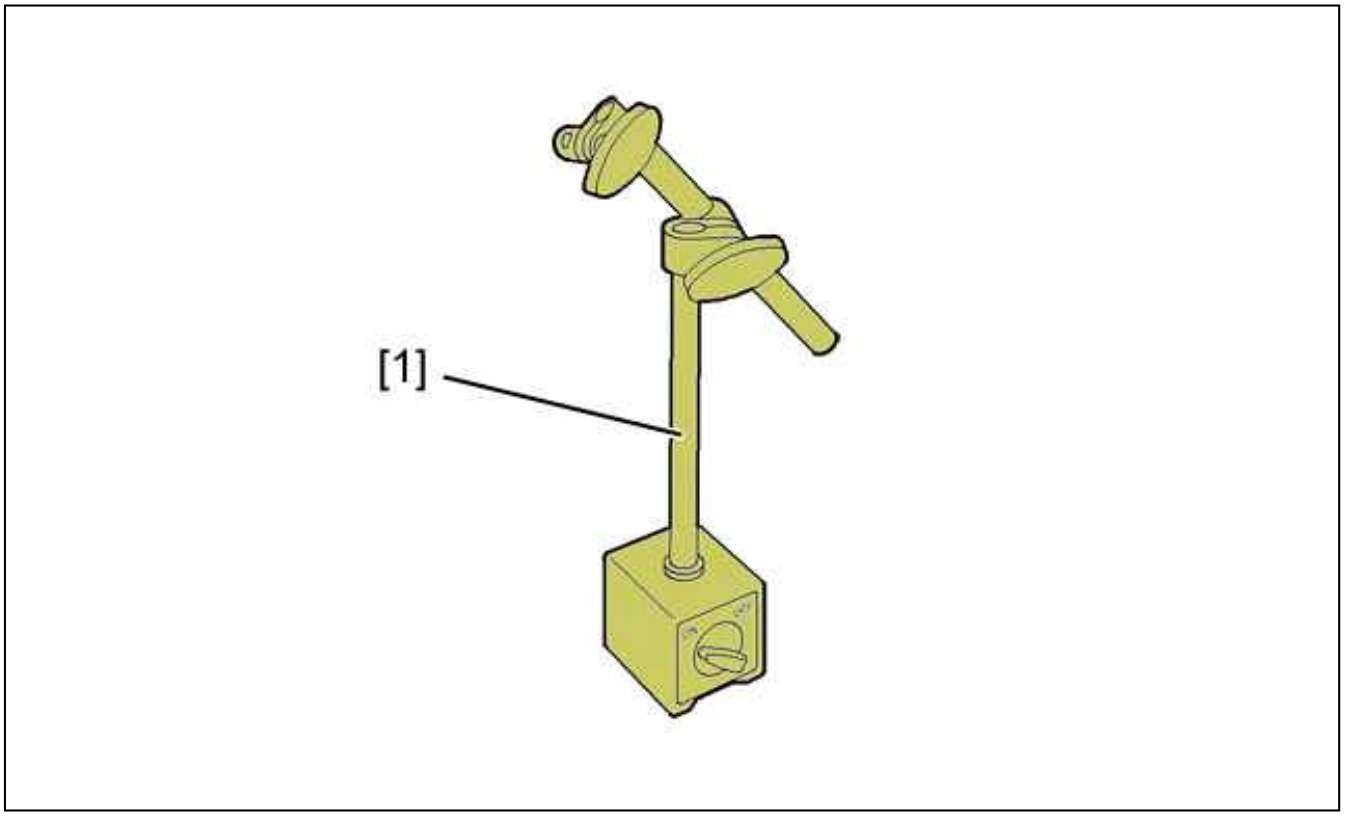

Figure : E5AP2XGD

[1] dial gauge magnetic support.

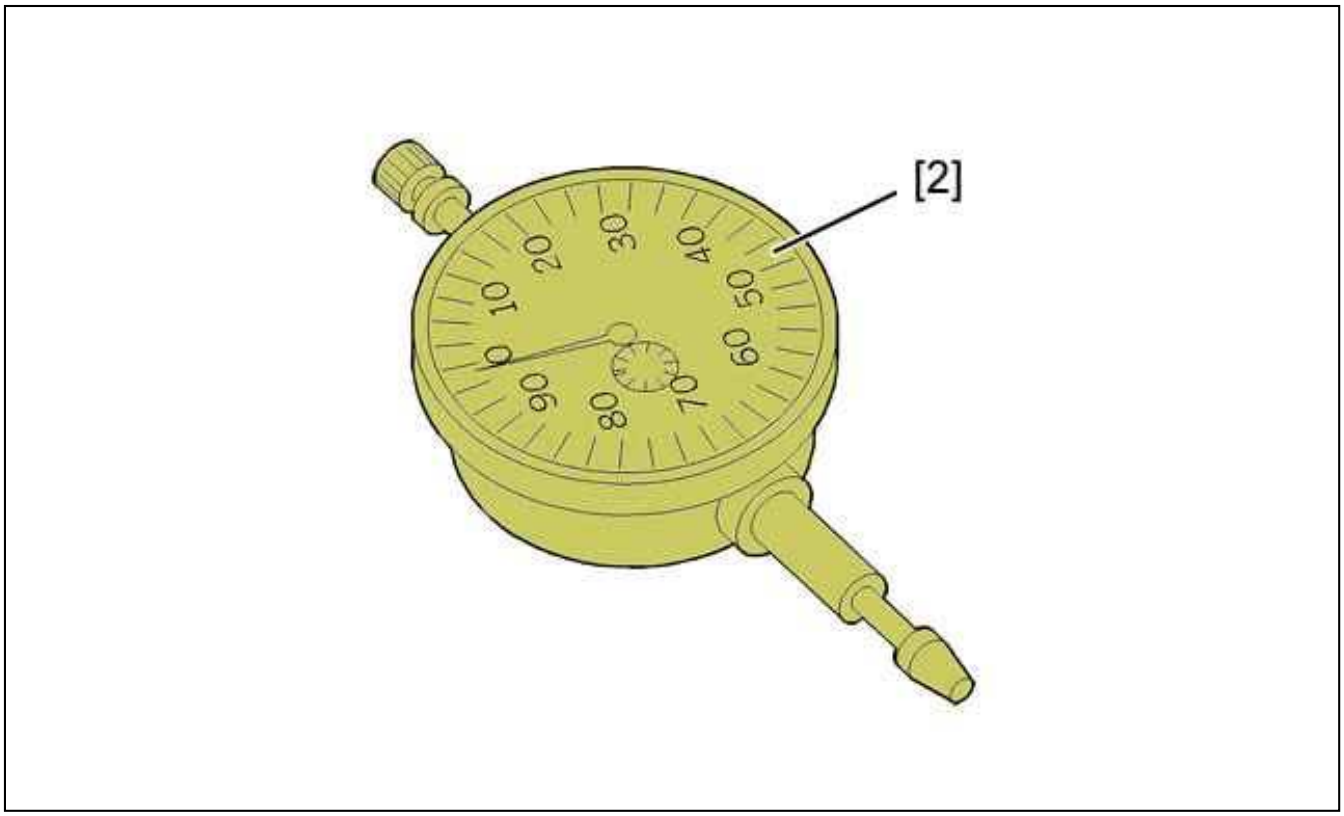

Figure : E5AP2XHD

[2] dial gauge 2437-T.

2. Preliminary operation

Untighten the rear wheel bolts.
Raise and support the vehicle, with the rear wheels hanging free.
Remove the rear wheels.

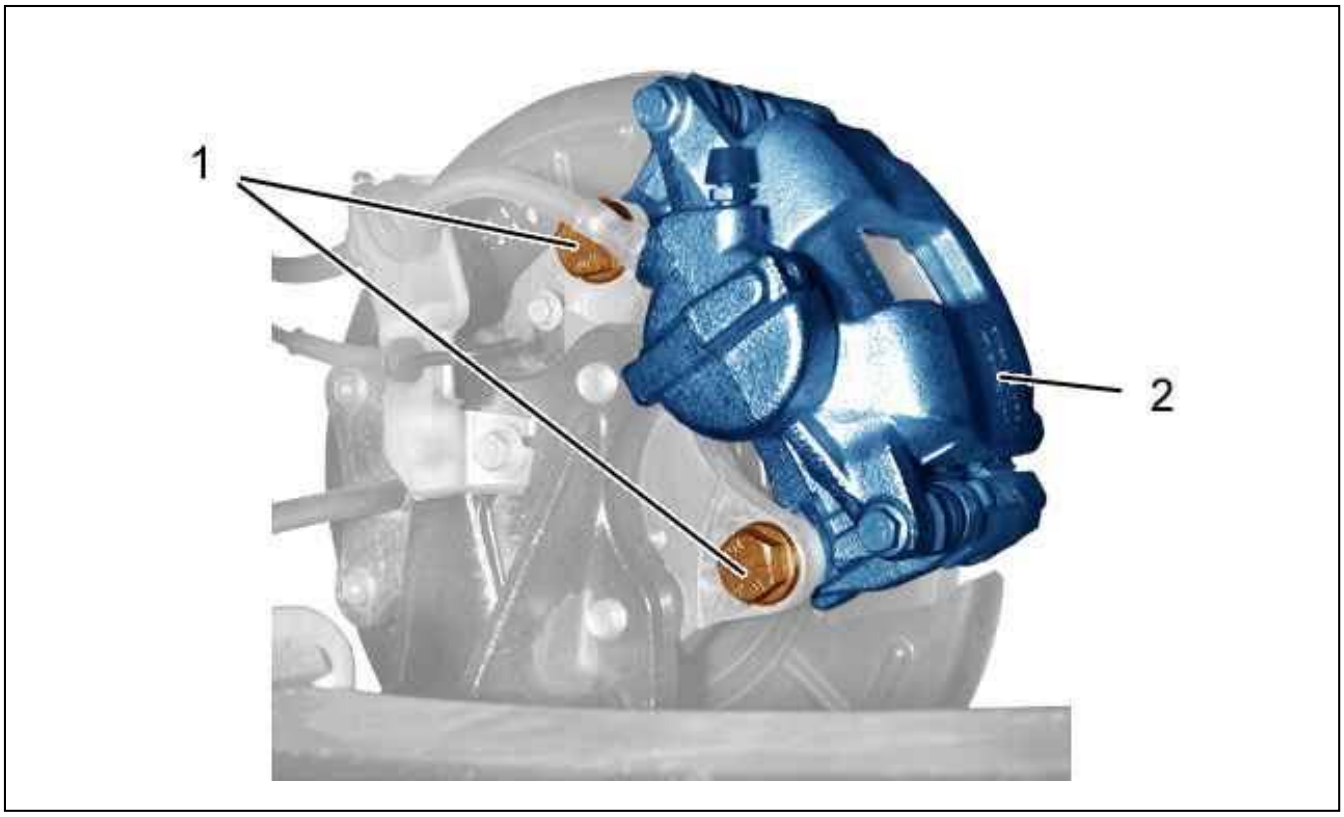

Figure : B3FP7KND

Remove :

- The rear brake pads (see the relevant operation)
- The bolts (1)

Move aside and suspend the brake caliper (2).

3. Checking the thickness

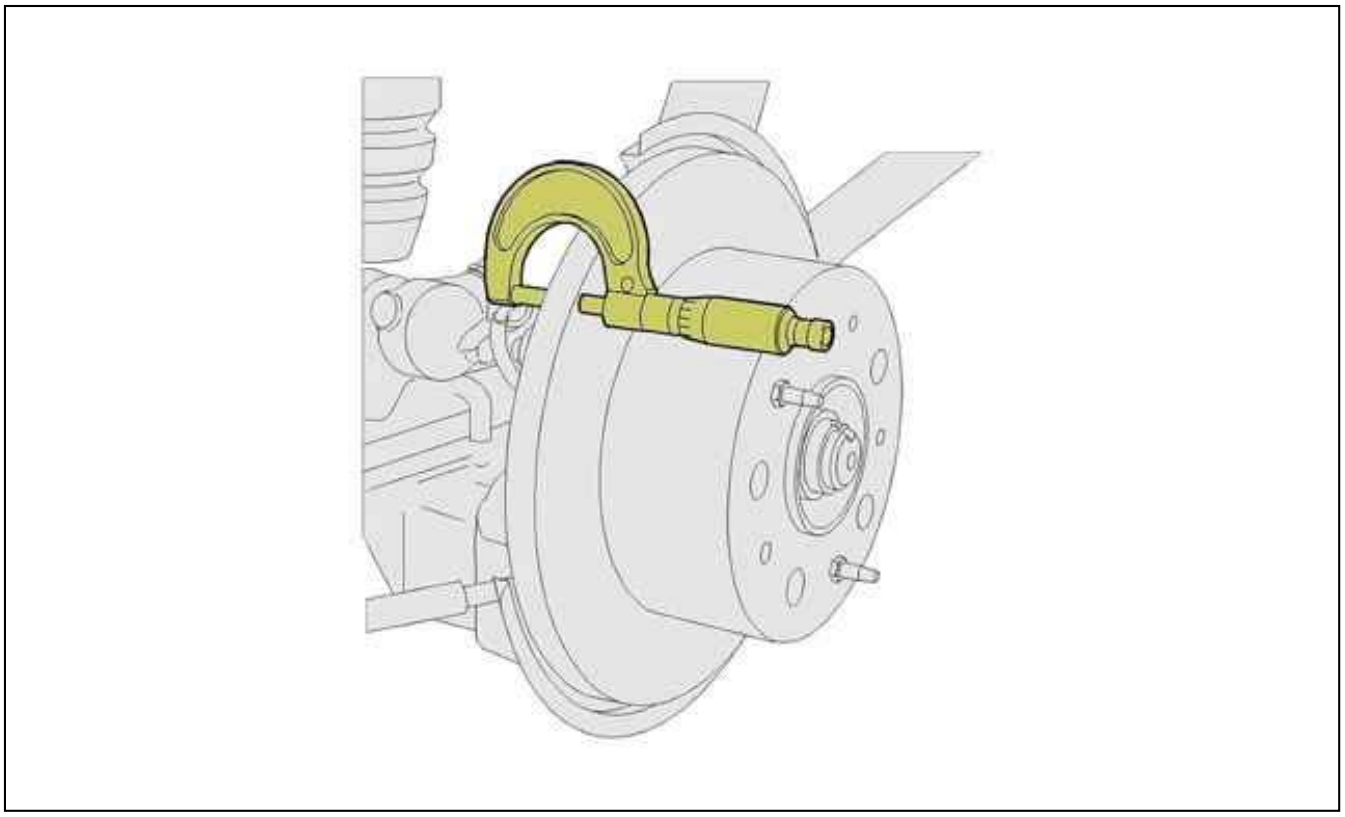

Figure : B3FP7KPD

Use a 0/50 mm micrometer.
Max. thickness variation on one circumference = 0,025 mm .
Nominal thickness : 15,9/16,2 mm .
Min. permissible thickness (wear) : 14,2 mm .
Always replace the discs that are not as thick as the value shown.
In the case of damage or deep scratches, the surfaces of the disc may be ground.
Minimum permitted thickness after grinding : 14,55 mm .

4. Checking the run-out

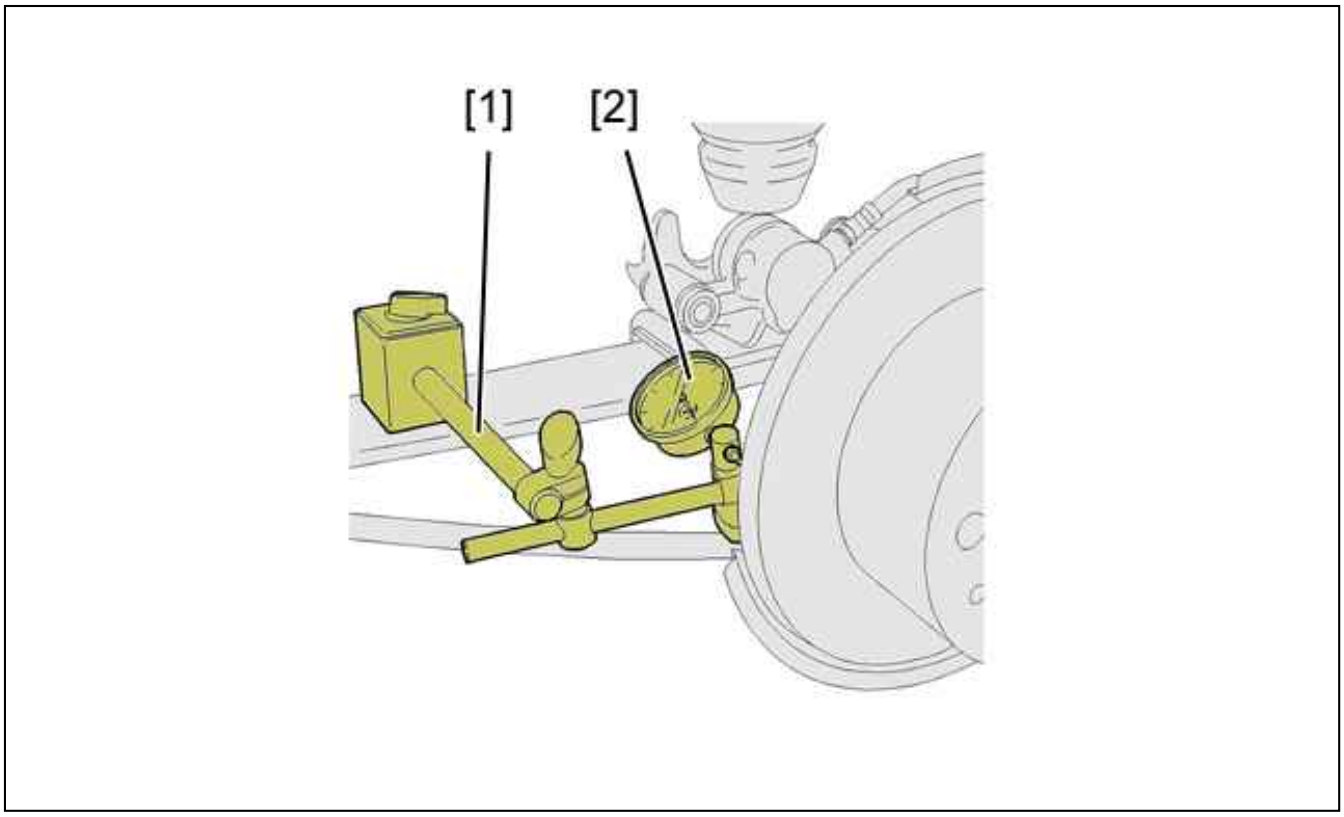

Figure : B3FP7KQD

Fix the magnetic support [1] on the spring leaf.
Attach the dial gauge [2] to the magnetic bracket [1].
The brake disc run-out check is carried out at approximately 2 mm from the outside diameter.
Turn the brake disc by a full rotation.
Maximum run-out = 0,030 mm .

5. Brake disc inside diameter check

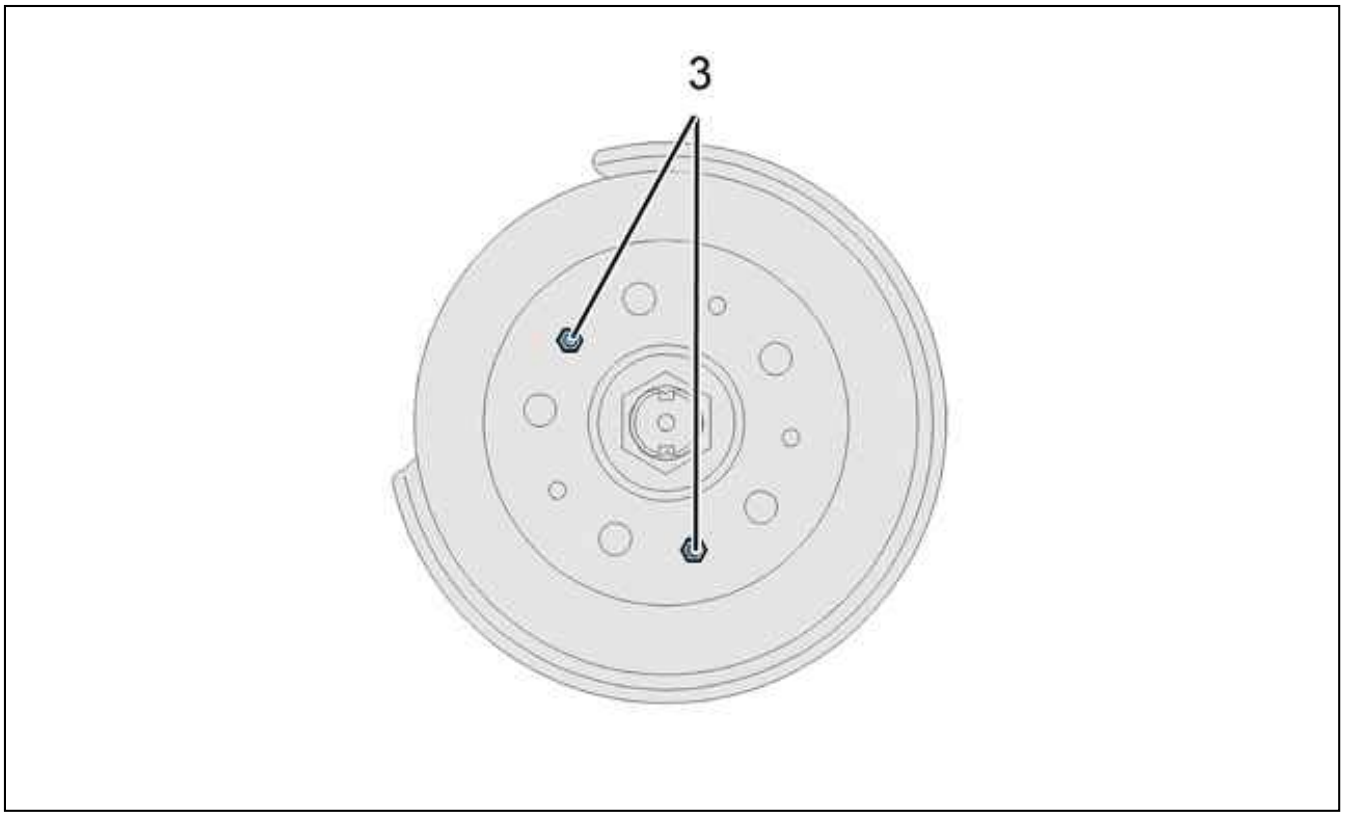

Figure : B3FP7K7D

Remove :

- The bolts (3)
- The rear brake disc

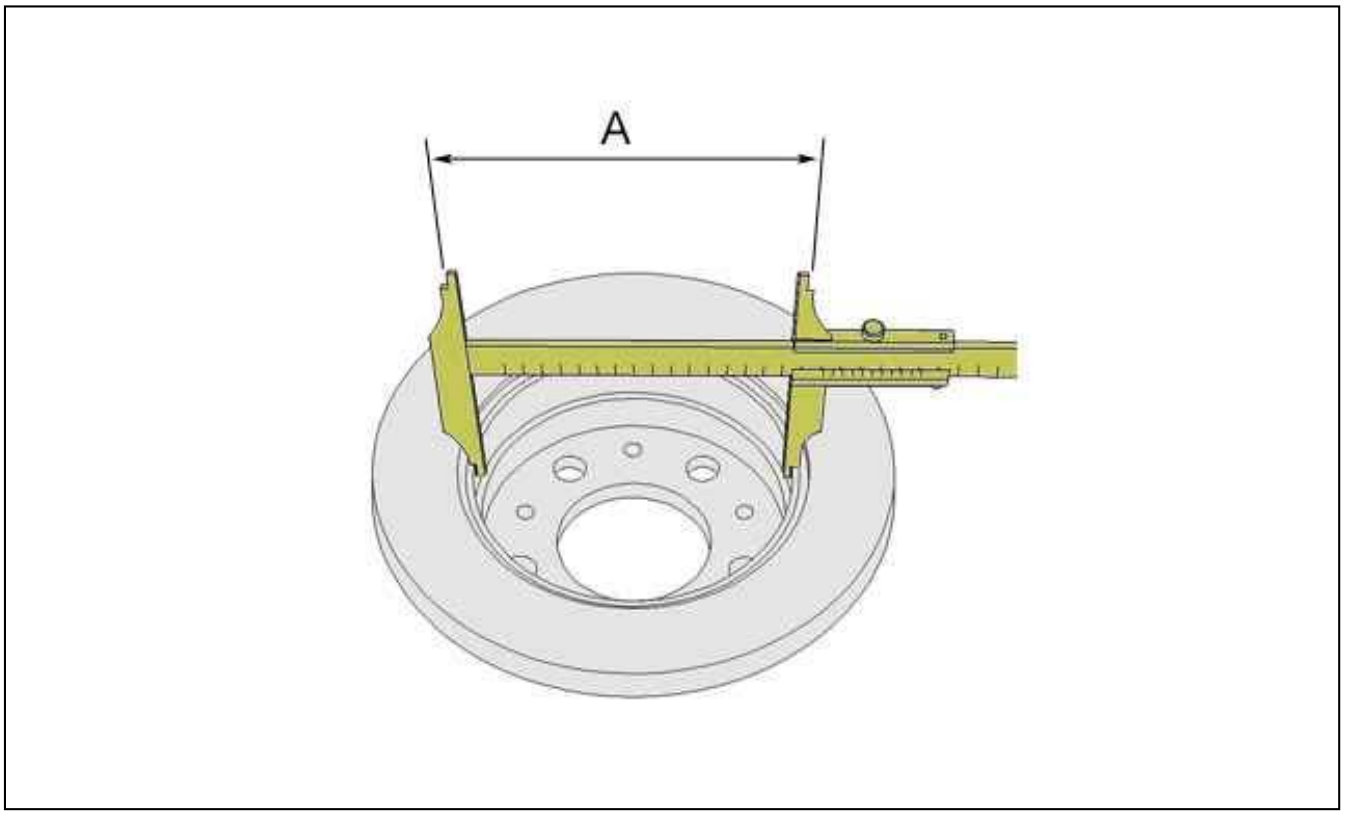

Figure : B3FP7KRD

A : Disc brake bore diameter :

- Nominal diameter : 172/172,15 mm
- Maximum permitted diameter after wear : 173 mm

Brake shoe lining : Min. permissible thickness = 1,5 mm .

6. Additional operations

Refit :

- The rear brake disc
- The bolts (3)

Tighten the bolts (3) to 1,2 ± 0,1 daN.m.
Position the brake caliper (2).
Refit the bolts (1) (new) (pre-coated with a thread locking product).
Tighten the bolts (1) to 16 ± 0,5 daN.m.
Fit the brake pads (see the relevant operation).
Apply the brakes, with the engine running, several times before driving the vehicle.
Check the operation of the brakes.
Refit the rear wheels.
Return the vehicle to its wheels.
Tighten the wheel bolts .

CHECK : FRONT BRAKE DISCS

ESSENTIAL : Observe the safety and cleanliness recommendations.

1. Recommended tools

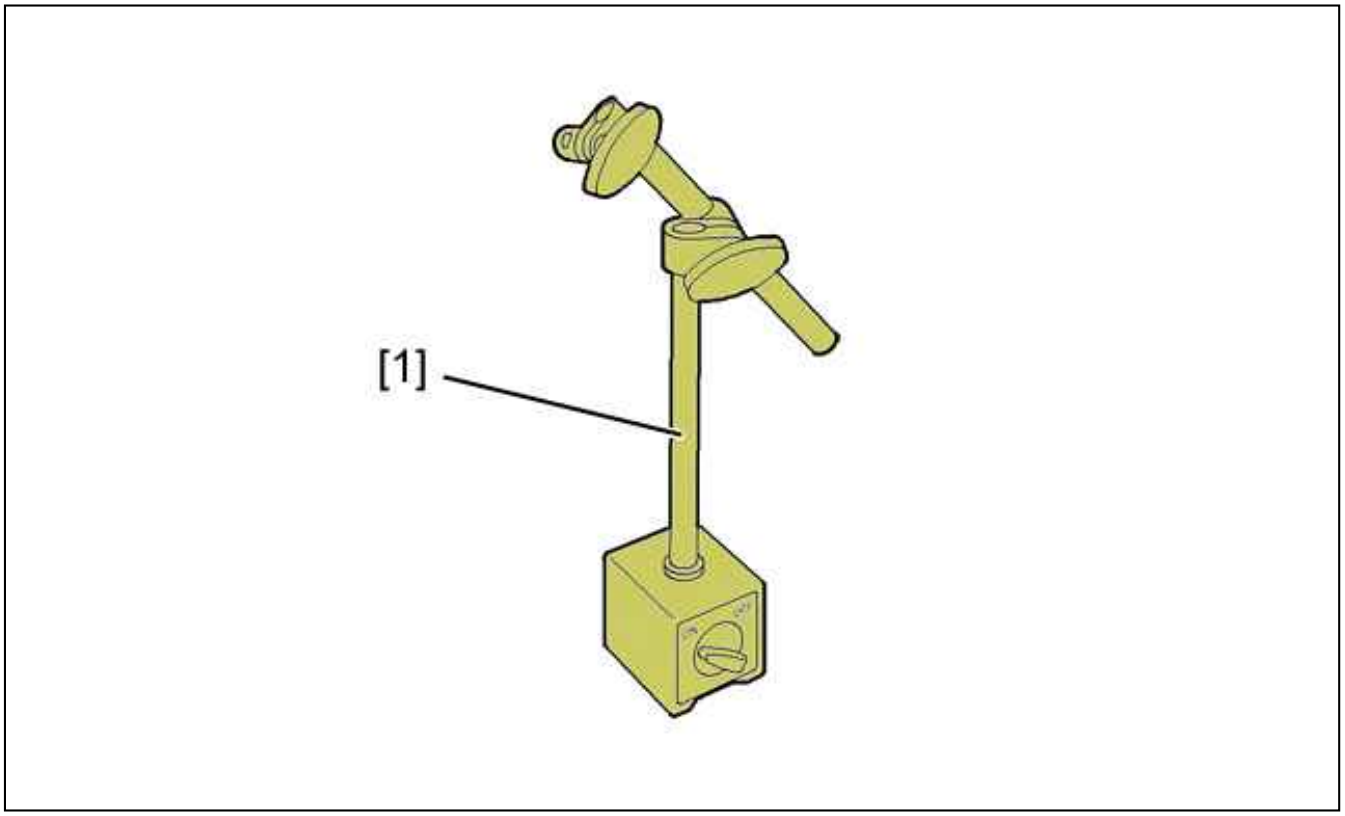

Figure : E5AP2XGD

[1] dial gauge magnetic support.

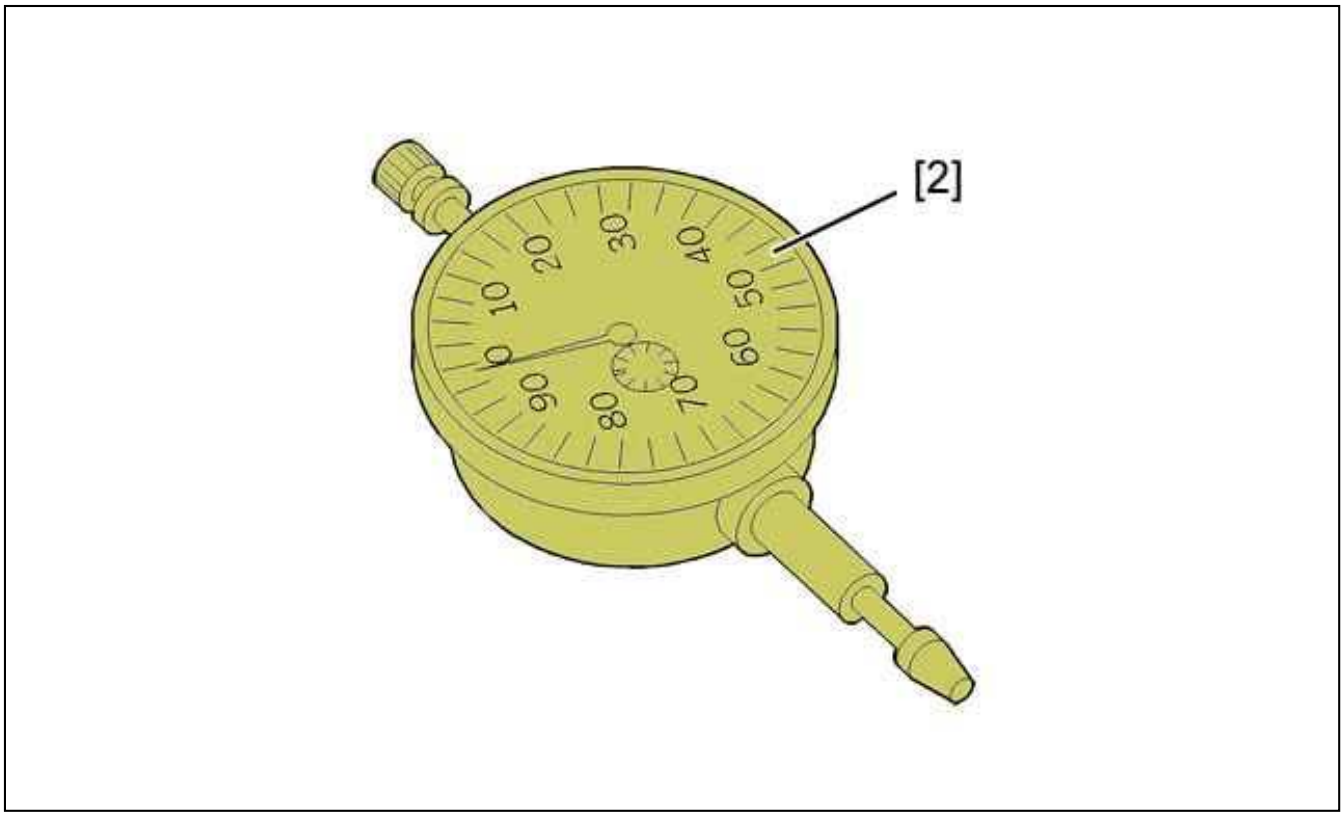

Figure : E5AP2XHD

[2] dial gauge 2437-T.

2. Preliminary operation

Untighten the wheel screws (front).
Lift and support the vehicle with front wheels suspended.
Remove the front wheels.

N.B. : The check is performed in the same way with or without brake caliper.

If need be, push the pistons back a little.

3. Checking the thickness

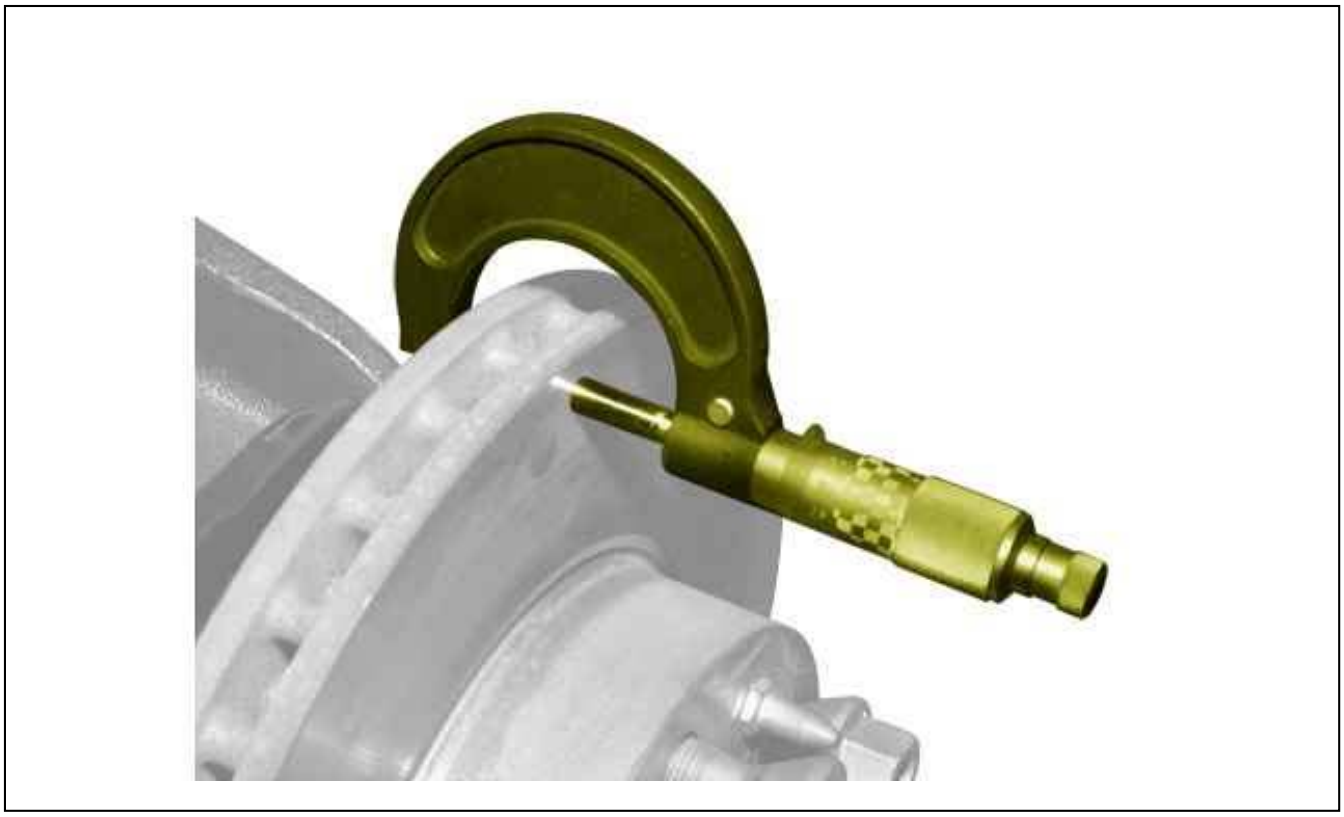

Figure : B3FP7KLD

Use a 0/50 mm micrometer.
Always replace the discs that are not as thick as the value shown.
In the case of damage or deep scratches, the surfaces of the disc may be ground.

Nominal dimensions (mm)	Nominal thickness (mm)	Min. permissible thickness (wear) (mm)	Minimum permitted thickness after grinding (mm)	Max. thickness variation on one circumference (mm)
Diameter 280 x 24	23,9 / 24,2	21,9	22,25	-
Diameter 300 x 24	-	-	-	0,015
Diameter 280 x 28	27,9 / 28,2	25,9	26,25	-
Diameter 300 x 32	31,9 / 32,2	29,9	30,25	-

4. Checking the run-out

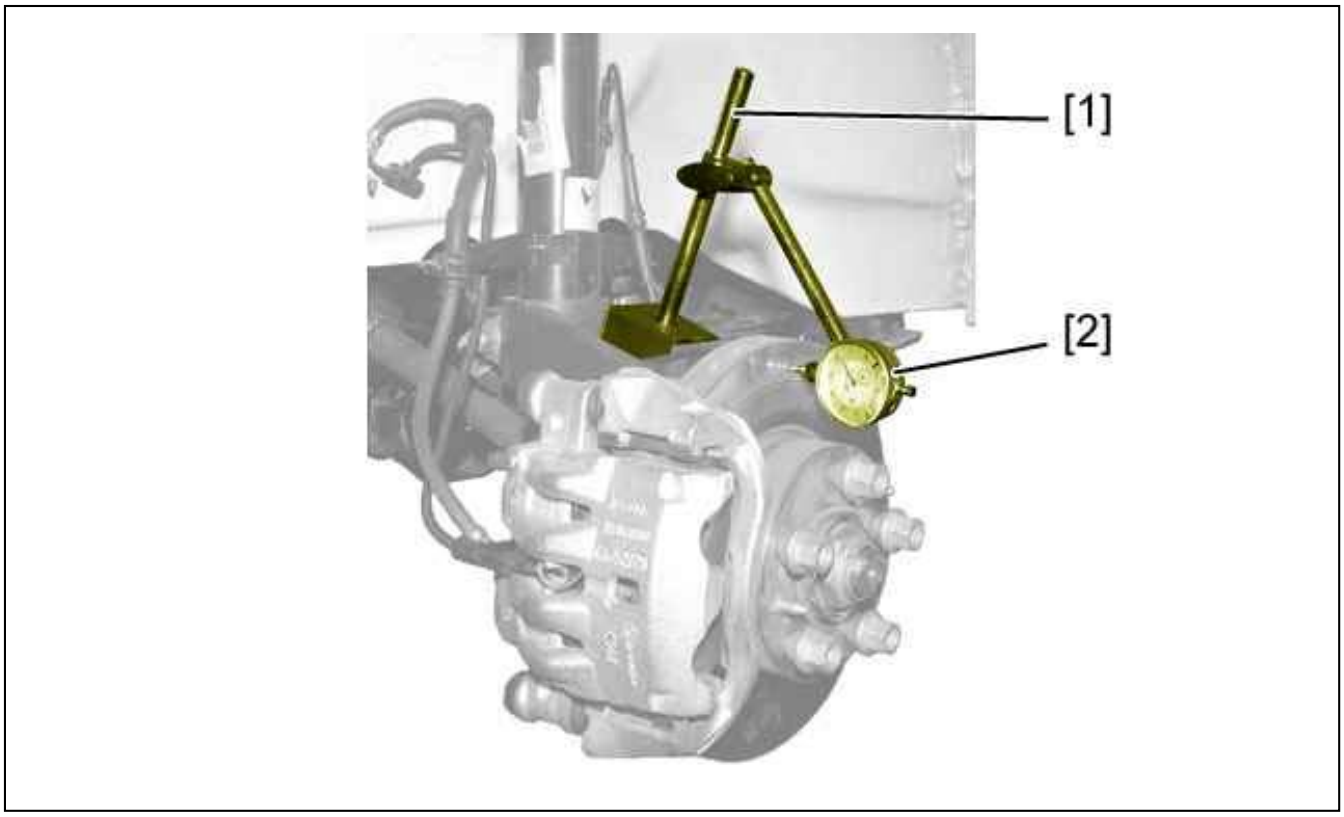

Figure : B3FP7KMD

Fix the magnetic bracket [1] onto the suspension leg.
Attach the dial gauge [2] to the magnetic bracket [1].
The brake disc run-out check is carried out at approximately 2 mm from the outside diameter.

CAUTION : To check the front brake disc run-out, turn the disc by means of the driveshaft.

Turn the brake disc by a full rotation.
Maximum run-out 0,050 mm .

5. Additional operations

Fit the wheels.
Return the vehicle to its wheels.
Tighten the wheel bolts .

CHECK : BRAKING SYSTEM

ESSENTIAL : Observe the safety and cleanliness recommendations .

1. Foreword

This document describes a brake wear checking method, it can be printed, as can the associated methods, at the request of the customer.

2. Tooling

CAUTION : The kit [0805] is not available from replacement parts. As a replacement, a dial gauge magnetic suppor can be used which will guarantee the measurements.

Equipment : Dial gauge magnetic support .

Tool	Reference	Designation
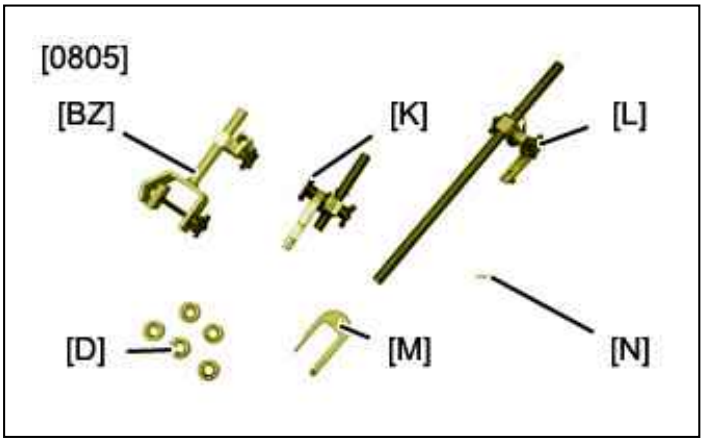 Figure : E5AB1CCT	[0805]	Disc/hub run-out checking tool
	[0805-BZ]	caliper
	[0805-K]	Disc check bracket + Ventilated disc fork
	[0805-L]	Disc check bracket
	[0805-D]	Non-ventilated disc fork
	[0805-M]	Spacer
	[0805-N]	dial gauge extension
 Figure : E5AB1CDT	[2437-T]	Dial gauge
	[0821]	Set of feeler gauges to measure the brake pad

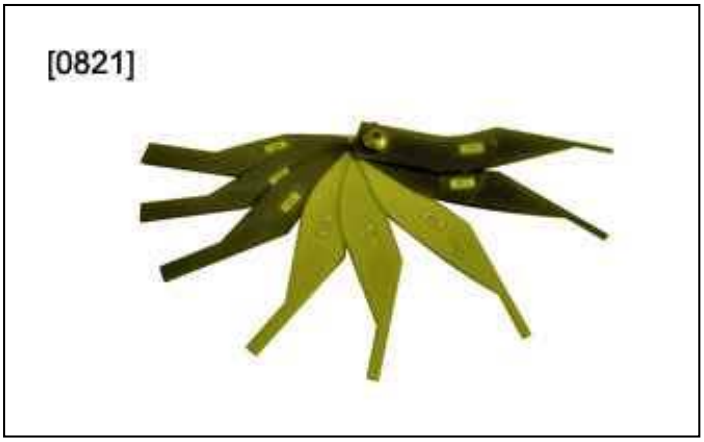 Figure : E5AB1JZT		wear

3. Front brake disc

Check the tightening torques of the wheels .

Raise and support the vehicle on a 2 -post lift.

3.1. Checking the run-out of the front brake disc (wheel fitted) (First possibility)

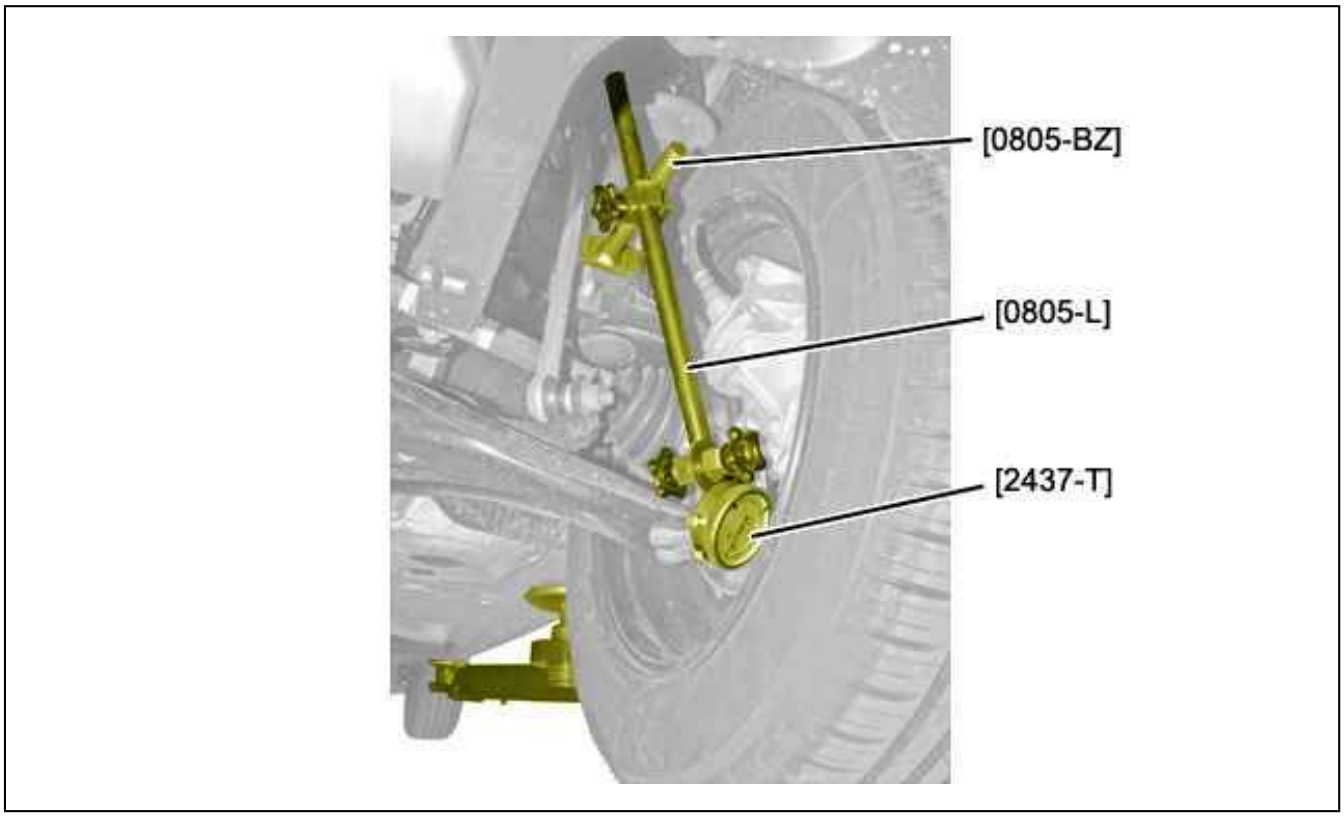

Figure : B3FD05CD

Fix :

- The assembly [0805-BZ], [0805-L] on the damper
- The dial gauge [2437-T] on the tool [0805-L]

Place the tip of the dial gauge [2437-T] in contact 10 mm from the periphery of the front brake disc (the tip under the action of the spring).

CAUTION : To check the front brake disc run-out, turn the disc by means of the driveshaft.

Carry out :

- A dial gauge zero reset
- One complete revolution of the front brake disc

Permissible run-out of the front brake disc assembled on the hub : Less than 0,05 mm.

3.2. Checking the run-out of the front brake disc (wheel fitted) (Second possibility)

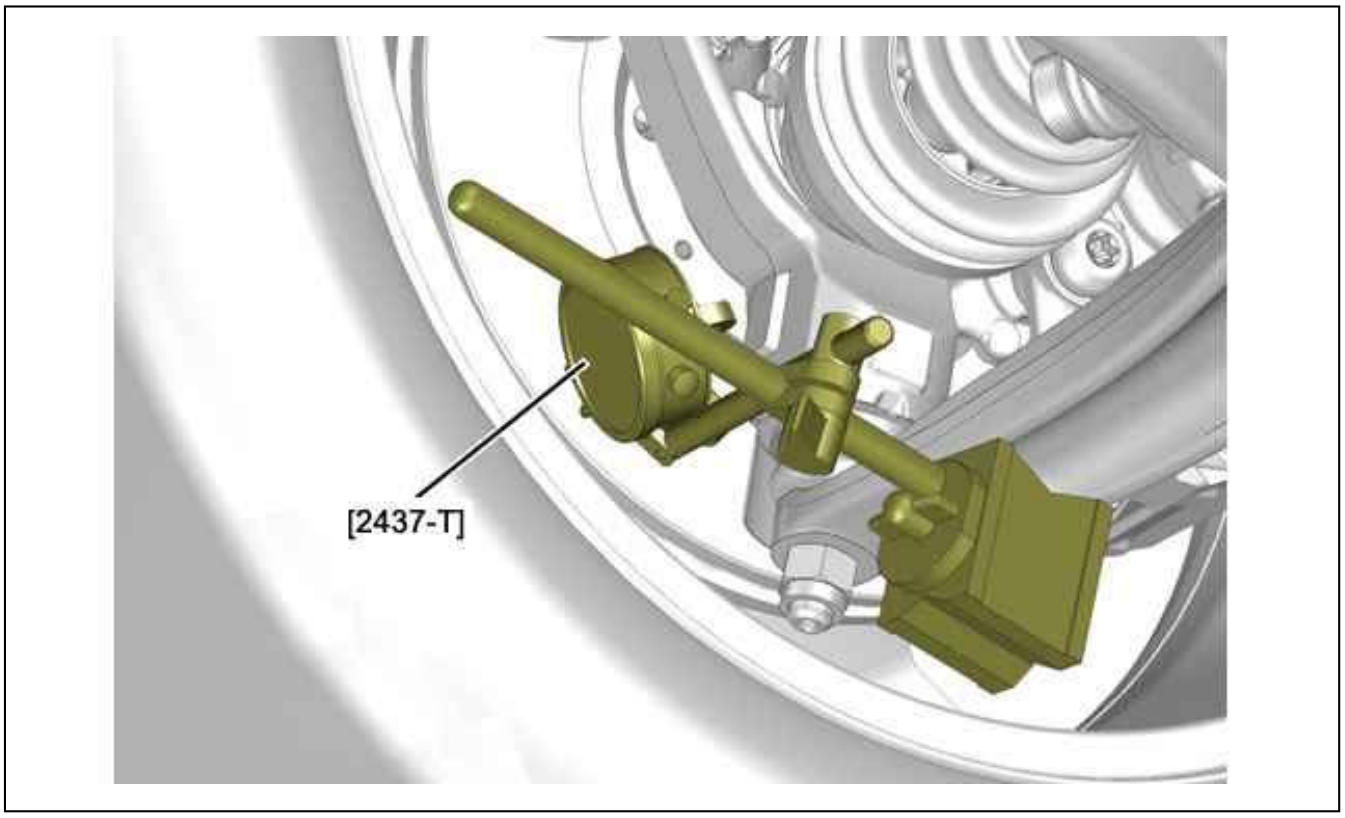

Figure : B3FD05DD

Fix the magnetic support on the lower suspension arm.
Fix the dial gauge [2437-T] on the magnetic support .
Place the tip of the dial gauge [2437-T] in contact 10 mm from the periphery of the front brake disc (the tip under the action of the spring).

CAUTION : To check the front brake disc run-out, turn the disc by means of the driveshaft.

Carry out :

- A dial gauge zero reset
- One complete revolution of the front brake disc

Permissible run-out of the front brake disc assembled on the hub : Less than 0,05 mm.

3.3. Checking the variation in the thickness of the front brake disc (Wheel removed) (First possibility)

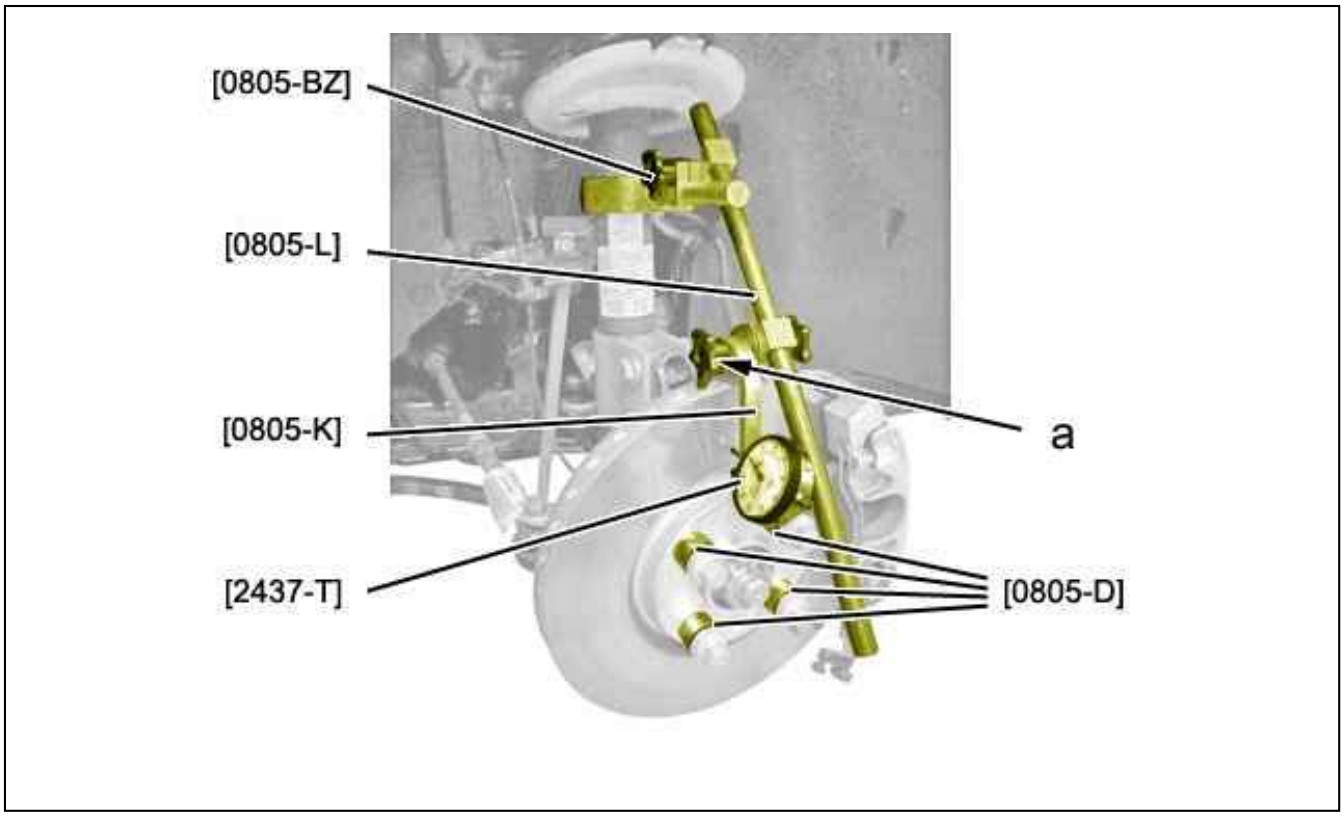

Figure : B3FD05ED

Refit and tighten the wheel bolts fitted with the tool [0805-D].
Fix :

- The assembly [0805-BZ], [0805-L] on the damper
- The dial gauge [2437-T] on the tool [0805-K]

Loosen the tool [0805-K] (at "a").
Place the tip of the dial gauge [2437-T] in contact 5 mm from the periphery of the brake disc (the tip under the action of the spring).

CAUTION : To check the variation in the thickness of the front brake disc, turn the brake disc by means of the driveshaft.

Carry out :

- A dial gauge zero reset
- One complete revolution of the front brake disc

Permissible variation in the thickness of the front brake disc over the same circumference of 0,01 mm.

3.4. Checking the variation in the thickness of the front brake disc (Wheel removed) (Second possibility)

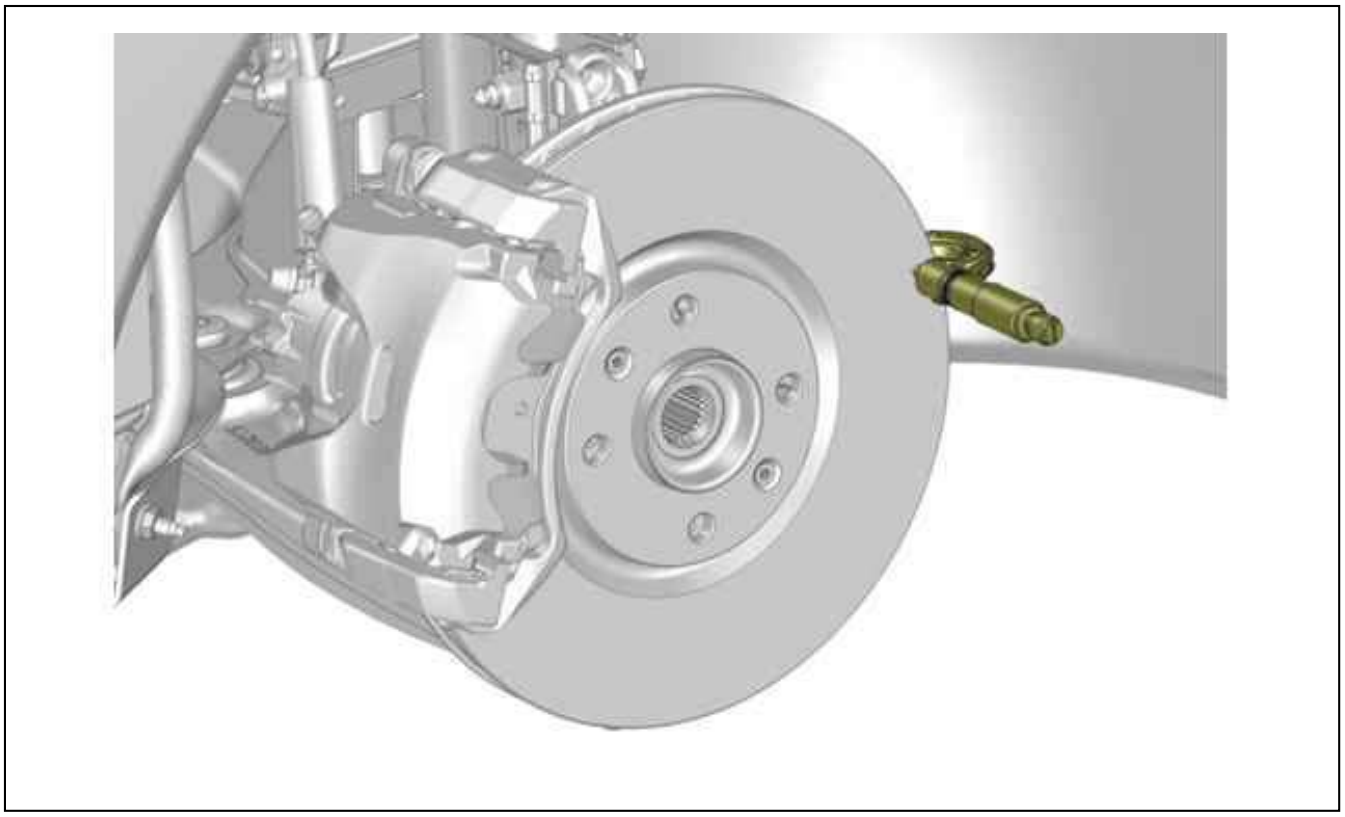

Figure : B3FD05FD

Check the variation in the thickness over the circumference at 8 points 5 mm from the periphery of the front brake disc ; Using a micrometer (Capacity: 0 - 50 mm).
Permissible variation in the thickness of the front brake disc over the same circumference of 0,01 mm.

3.5. Checking the thickness of the front brake disc (wheel removed)

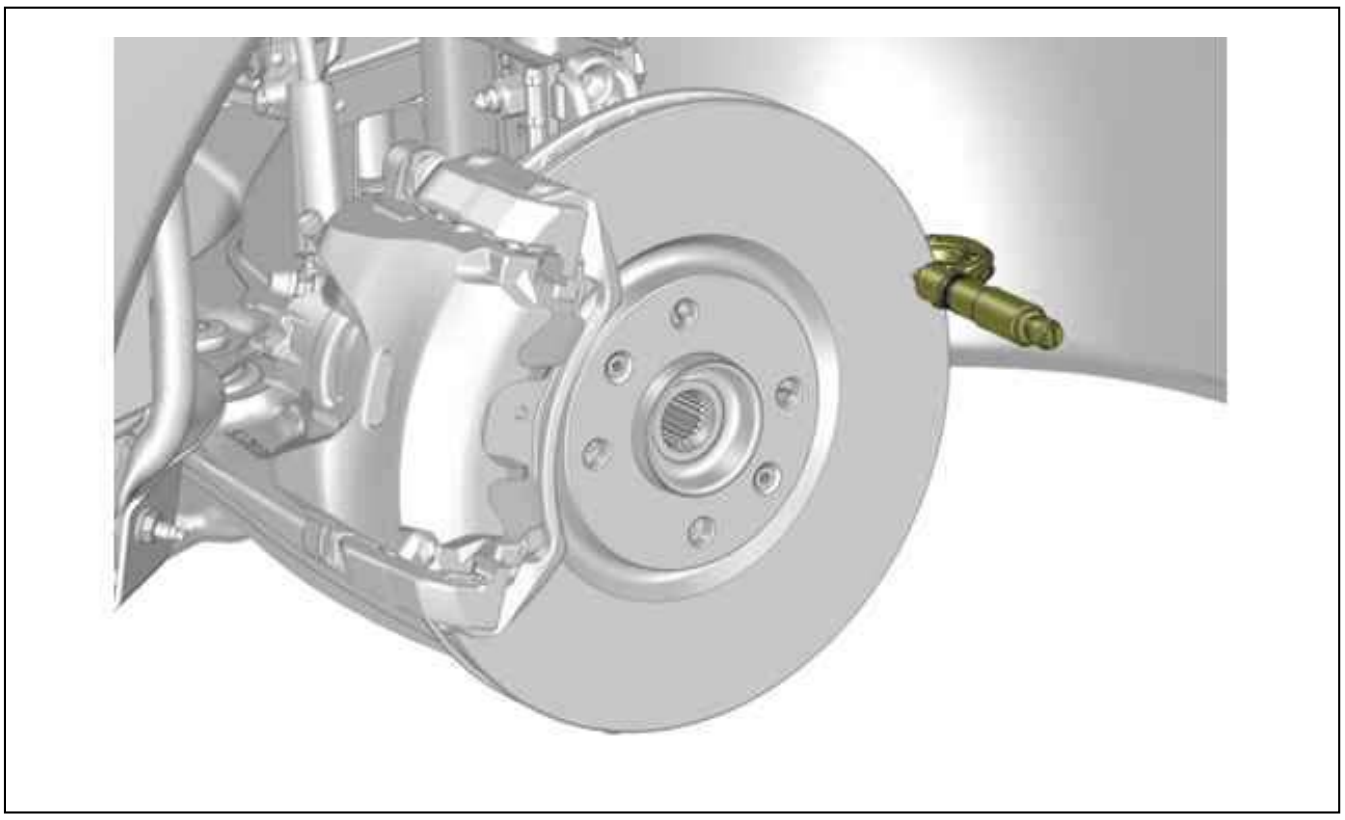

Figure : B3FD05FD

Measure the thickness of the front brake discs on the friction surfaces ; Using a micrometer (Capacity: 0 - 50 mm). See the table below.

Front discs			
Special feature	Nominal diameter of a new disc	Thickness of a new disc	Minimum permitted thickness
Solid disc	247 mm	10 mm	8 mm
	247 mm	13 mm	11 mm
	266 mm	13 mm	11 mm
Ventilated disc	247 mm	20,4 mm	18,4 mm
	257 mm	20,4 mm	18,4 mm
	257 mm	22 mm	20 mm
Ventilated disc (ION - C-Zero)	257 mm	17 mm	15,4 mm
Ventilated disc	266 mm	20,4 mm	18,4 mm
	266 mm	22 mm	20 mm
	280 mm	24 mm	22 mm
	280 mm	28 mm	26 mm
	281 mm	26 mm	24 mm
	283 mm	26 mm	24 mm
	284 mm	22 mm	20,2 mm
	285 mm	28 mm	26 mm
	288 mm	28 mm	26 mm
	294 mm	24 mm	22,4 mm
	294 mm	26 mm	24,4 mm
	300 mm	24 mm	22 mm
	300 mm	32 mm	30 mm
	302 mm	26 mm	24 mm
	304 mm	28 mm	26 mm
	309 mm	32 mm	30 mm
	310 mm	32 mm	30 mm
	330 mm	30 mm	28 mm
	340 mm	30 mm	28 mm
	380 mm	32 mm	30 mm

4. Front hub

4.1. Checking the run-out : First possibility

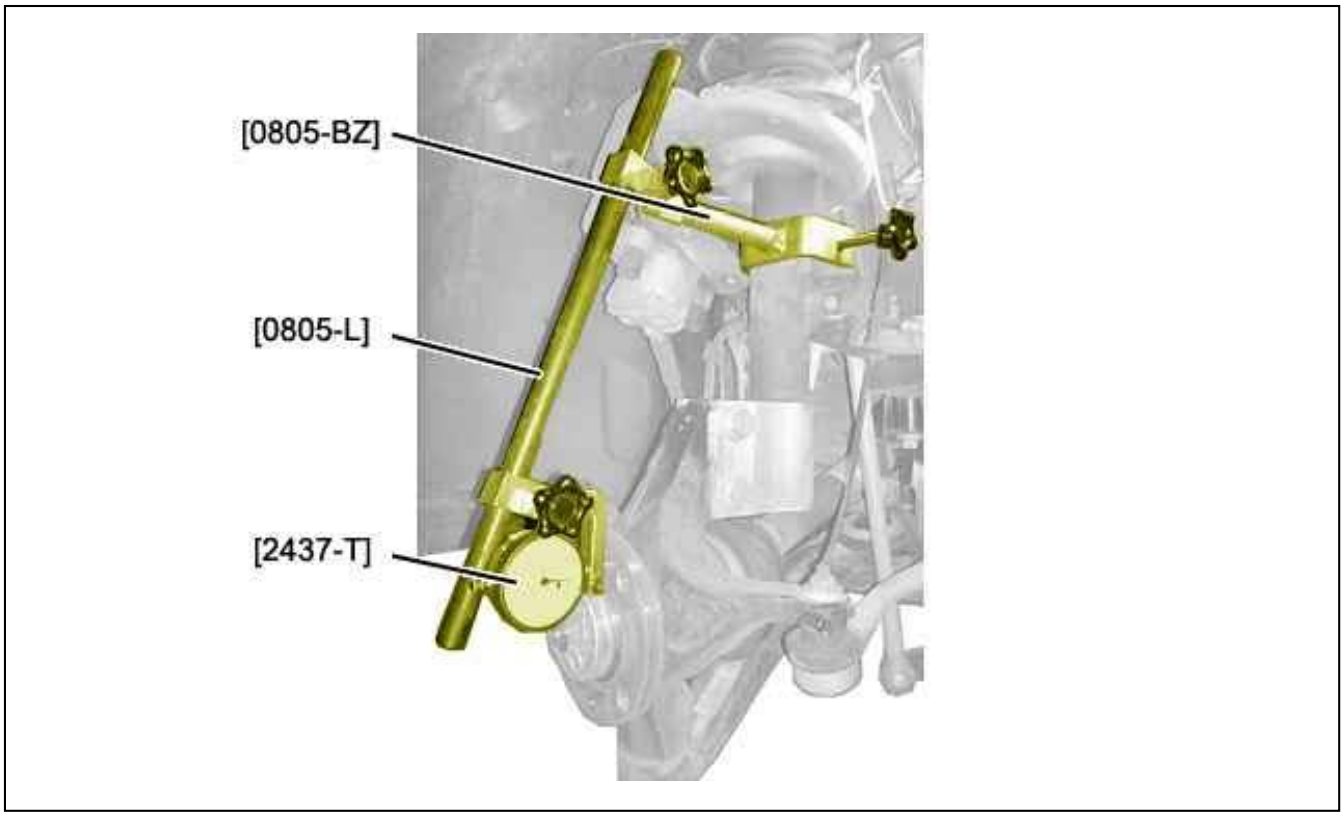

Figure : B3FD05ID

Check the tightening torque of the driveshaft nut.
Clean the hub/front brake disc contact surface ; Using an abrasive cloth.
Fix :

- The assembly [0805-BZ], [0805-L] on the damper
- The dial gauge [2437-T] on the tool [0805-L]

Place the tip of the dial gauge [2437-T] in contact as close as possible to the outer edge of the front hub (the tip under the action of the spring).

CAUTION : To check the run-out of the front hub, turn the hub by means of the driveshaft.

Carry out :

- A dial gauge zero reset
- A complete revolution of the front hub

Permissible run-out of the front hub : Less than 0,013 mm.

4.2. Checking the run-out : Second possibility

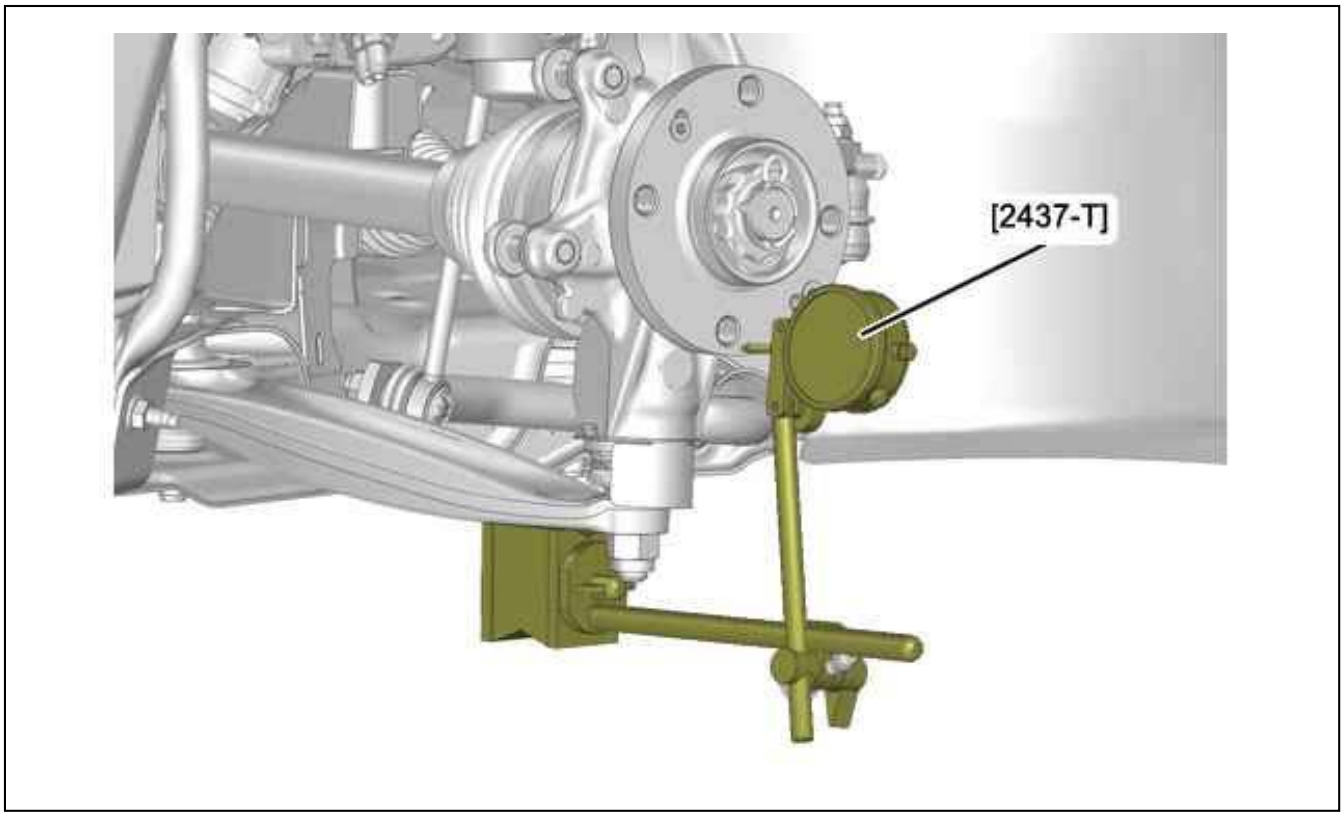

Figure : B3FD05JD

Fix :

- The magnetic support on the lower suspension arm
- The dial gauge [2437-T] on the magnetic support

Place the tip of the dial gauge [2437-T] in contact as close as possible to the outer edge of the front hub (the tip under the action of the spring).

CAUTION : To check the run-out of the front hub, turn the hub by means of the driveshaft.

Carry out :

- A dial gauge zero reset
- A complete revolution of the front hub

Permissible run-out of the front hub : Less than 0,013 mm.

5. Checking the thickness of the rear brake disc (wheel removed)

Slacken the parking brake .

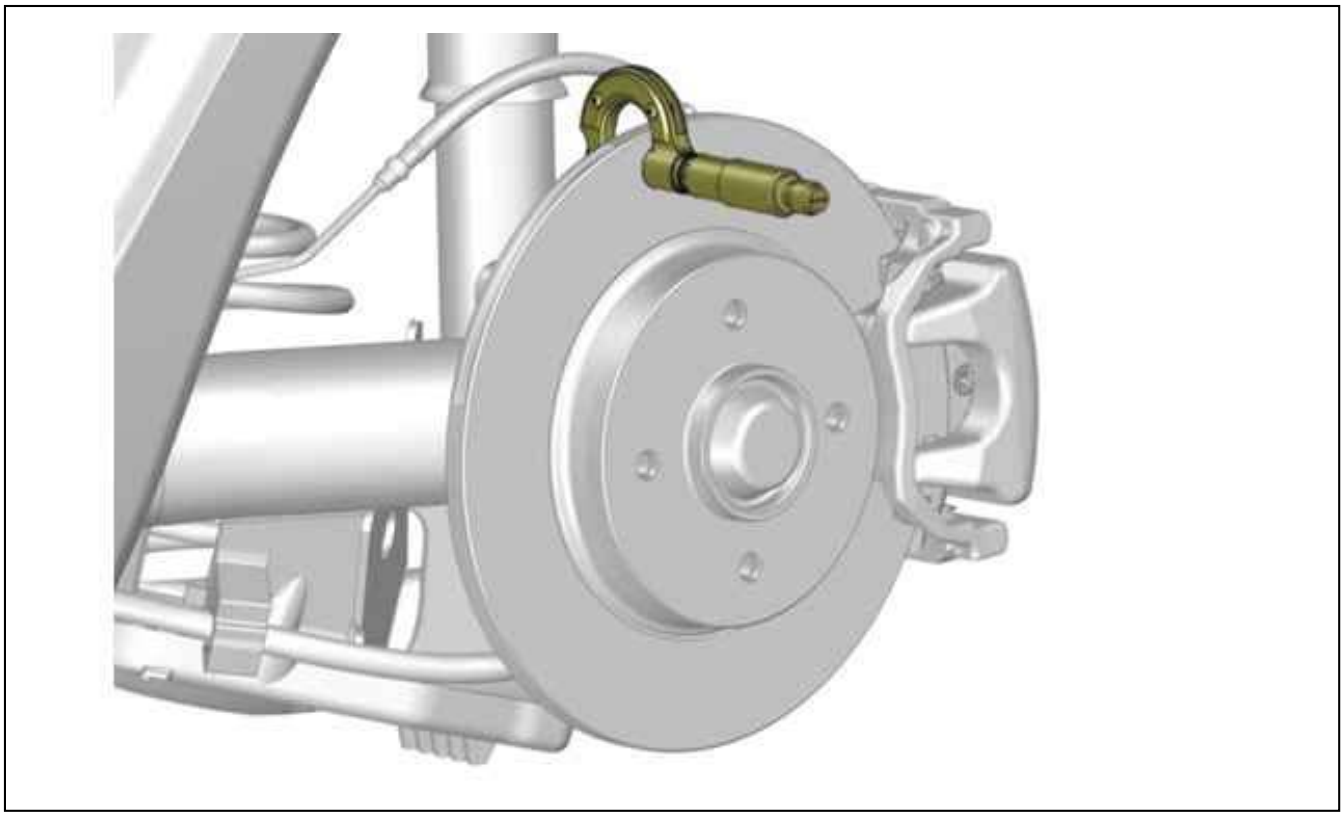

Figure : B3FD05KD

Measure the thickness of the rear brake discs on the friction surfaces ; Using a micrometer (Capacity: 0 - 50 mm). See the table below.

Rear discs			
Special feature	Nominal diameter of a new disc	Thickness of a new disc	Minimum permitted thickness
Solid disc	247 mm	8 mm	6 mm
Solid disc hub	249 mm	9 mm	7 mm
	268 mm	12 mm	10 mm
Solid disc	272 mm	12 mm	10 mm
	274 mm	14 mm	12 mm
	280 mm	16 mm	14 mm
	290 mm	10 mm	8 mm
	290 mm	12 mm	10 mm
	290 mm	14 mm	12 mm
	300 mm	16 mm	14 mm
	302 mm	10 mm	8,4 mm
Ventilated disc	302 mm	22 mm	20 mm

6. Rear brake drum check

Slacken the parking brake .
Remove :

- The wheel
- The rear brake drum

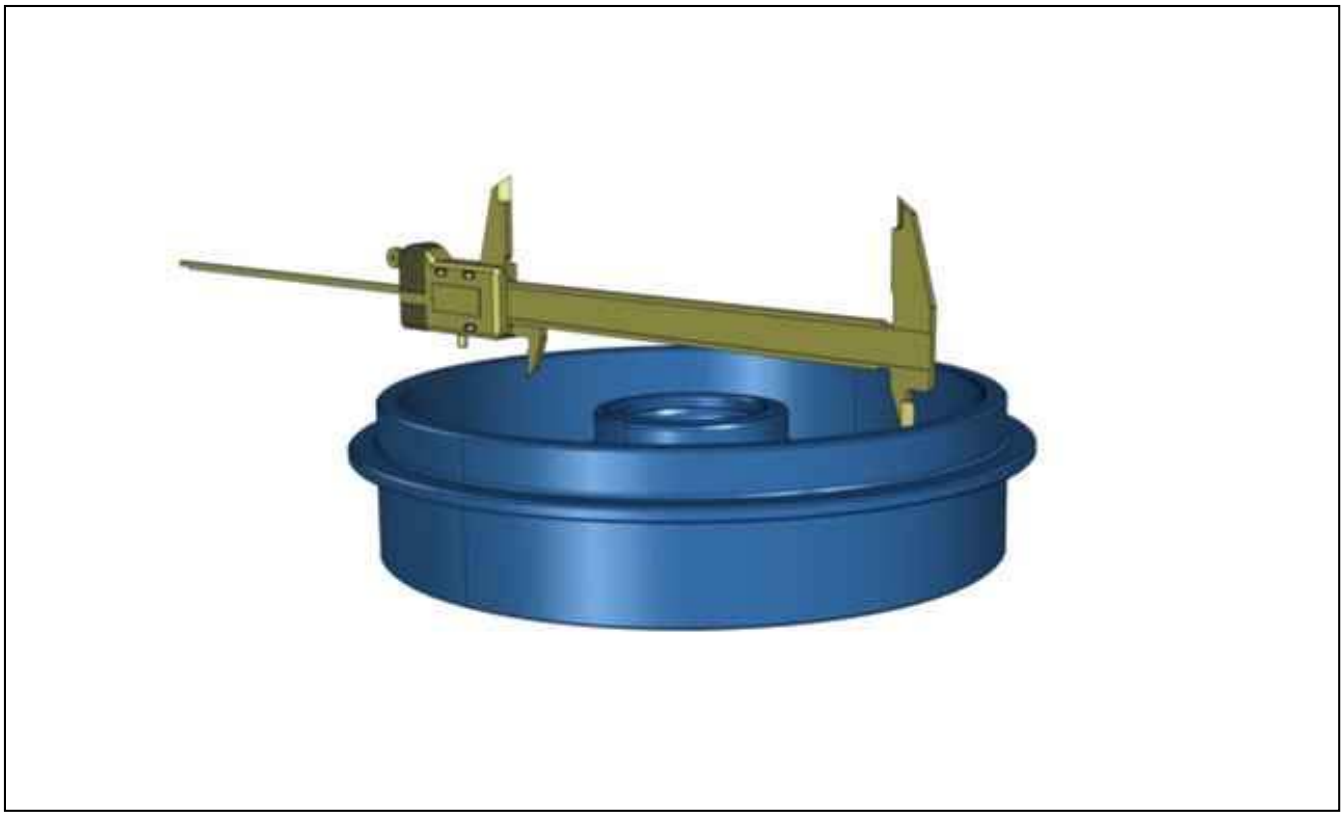

Figure : B3FD05LD

Measure the internal diameter of the rear brake drums on the friction surface ; Using sliding calipers .
See the table below.

Rear brake drum		
Drum	Nominal diameter of a new drum	Maximum permitted diameter
7’’	180 mm	182 mm
8’’	203 mm	204,4 mm
8" (ION - C-Zero)	203 mm	205 mm
9’’	228,6 mm	229,8 mm
10’’	254,15 mm	256 mm

Refit :

- The brake drum
- The wheel

7. Check of the thickness of the brake pad linings and brake shoe linings

Check the rear brake pad wear : Using tool [0821].

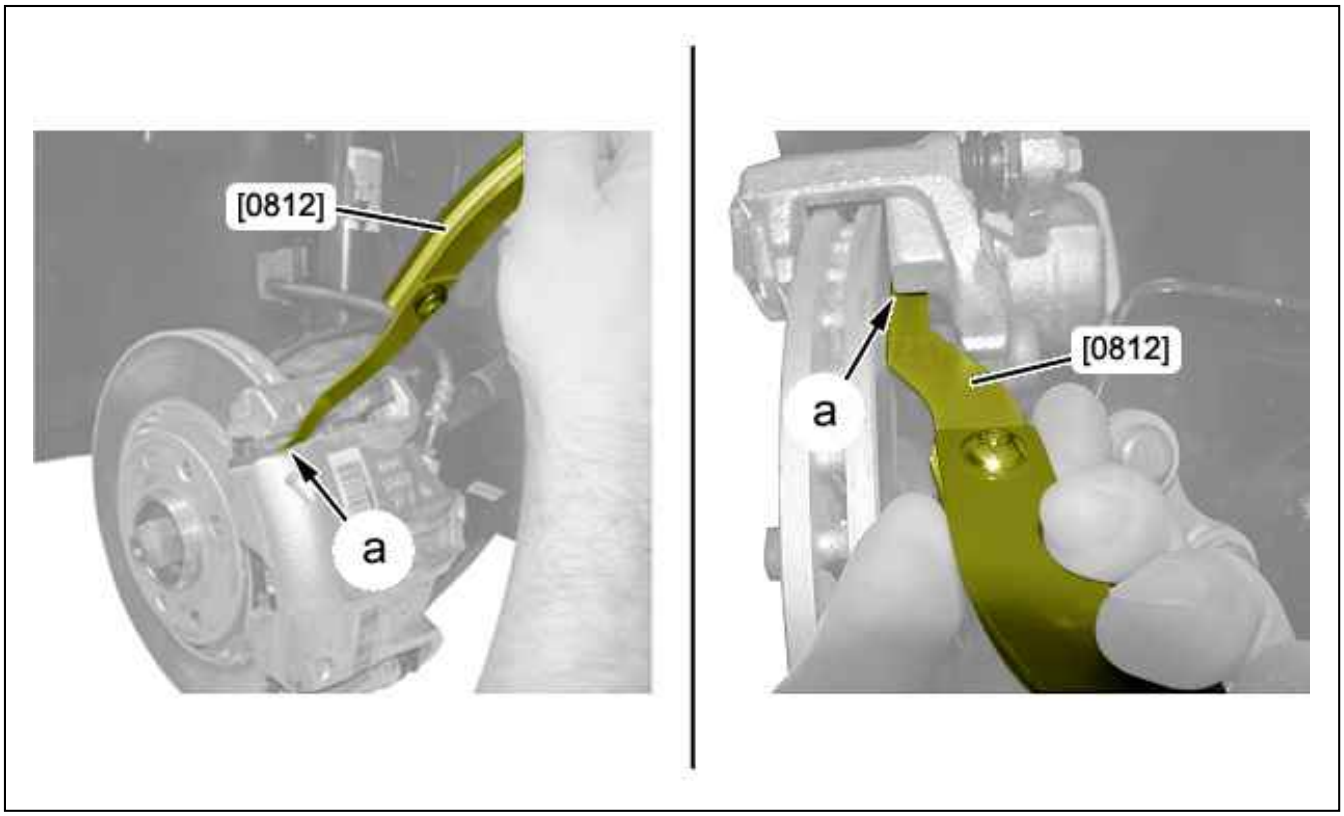

Figure : B3FD05UD

N.B. : Take several measurements at the points accessible using the tool [0821] (inside and outside) : For example a "a".

Vehicle	Minimum thickness of the brake pad linings (front)	Minimum thickness of the brake pad linings (rear)	Minimum thickness of the brake shoe linings
C-ZERO (S4)	2 mm	-	1 mm
C1 (B0)	1 mm	-	1 mm
C3 (Ai51)			
C2 (A6)	2 mm	2 mm	1 mm
C3 (A8)			
C3 (A31)			
C3 Pluriel (A42)			
C3 (A51)			
DS3 (A55)			
C3 Aircross (AI58)	2 mm	-	1 mm
C3 Picasso (A58)	2 mm	2 mm	-
C-ELYSEE (M43)	2 mm	-	1 mm
C-ELYSEE China	2 mm	2 mm	-
C4 (B53)	2 mm	2 mm	-
C4 PICASSO (B58)			
C4 PICASSO B78			
C4 (B7) -DS4			
C4 China (BX3)			
C4 L Russia (B7R)			

CITROEN C5 (X3)	2 mm	2 mm	1 mm
CITROEN C5 (X4)			
CITROEN C5 (X7)	3 mm	3 mm	-
CITROEN C5 (XW)			
DS5 (B81)	2 mm	2 mm	-
DS5 China (B8C)	2 mm	2 mm	-
C6 (X6)	2 mm	2 mm	-
C8 (VV)	3 mm	2 mm	-
C4 Aircross (J4)	2 mm	2 mm	1 mm
C-Crosser (I4)	2 mm	2 mm	1 mm
NEMO (MCV)	2 mm	2 mm	1 mm
BERLINGO (M49)	2 mm	-	1 mm
BERLINGO (M59)	2 mm	-	1 mm
BERLINGO (B9)	2 mm	2 mm	1 mm
DISPATCH - SYNERGIE (U6)			
DISPATCH 3 (G9)			
RELAY 2 (U5)	2 mm	2 mm	1 mm
RELAY 3 (U9)	2 mm	2 mm	1 mm

CHECK : BRAKE FLUID

ESSENTIAL : Observe the safety and cleanliness recommendations .

CAUTION : Brake fluid is toxic. Avoid contact with the skin and the eyes. In the event of contact with the eyes, rinse them immediately with copious amounts of water for several minutes.

CAUTION : Brake fluid is highly corrosive to paintwork. If any is projected onto the bodywork, clean the surface immediately.

1. Tooling

Brake fluid tester (*)		
make	Reference	Type
SURETEST	TLF	Measures the boiling point of the brake fluid
DOW AUTOMOTIVE	BETATEST	
FACOM TOOLS	DF.16	
EBT	06.1	Measures the specific gravity of the brake fluid

(*) Non-exhaustive list, refer to the catalogue "Tools and Equipment".

2. Check

Remove the brake fluid reservoir filter.

ESSENTIAL : Any contamination of the brake fluid is forbidden. The brake fluid should be clear and free from sediments or floating substances.

Check the fluid, following the instructions provided by the equipment supplier.

Checking values	
Brake fluid	Boiling point (minimum humidity)
DOT 3	140 °C
DOT 4	155 °C
SUPER DOT 4	180 °C
DOT 5	180 °C

N.B. : If the value checked is lower than the value for the "minimum humidity" boiling point, or within a tolerance of + 1(% of this value, replace the brake fluid (see the relevant operation).

ESSENTIAL : Use only approved and recommended hydraulic fluids.

ADJUSTMENT : PARKING BRAKE

ESSENTIAL : Observe the safety and cleanliness recommendations .

Untighten the rear wheel bolts.
Raise and support the vehicle, with the rear wheels hanging free.
Remove the rear wheels.
Depress the brake pedal several times.
Pull the parking brake lever firmly 4 to 5 times.
Slacken the parking brake .

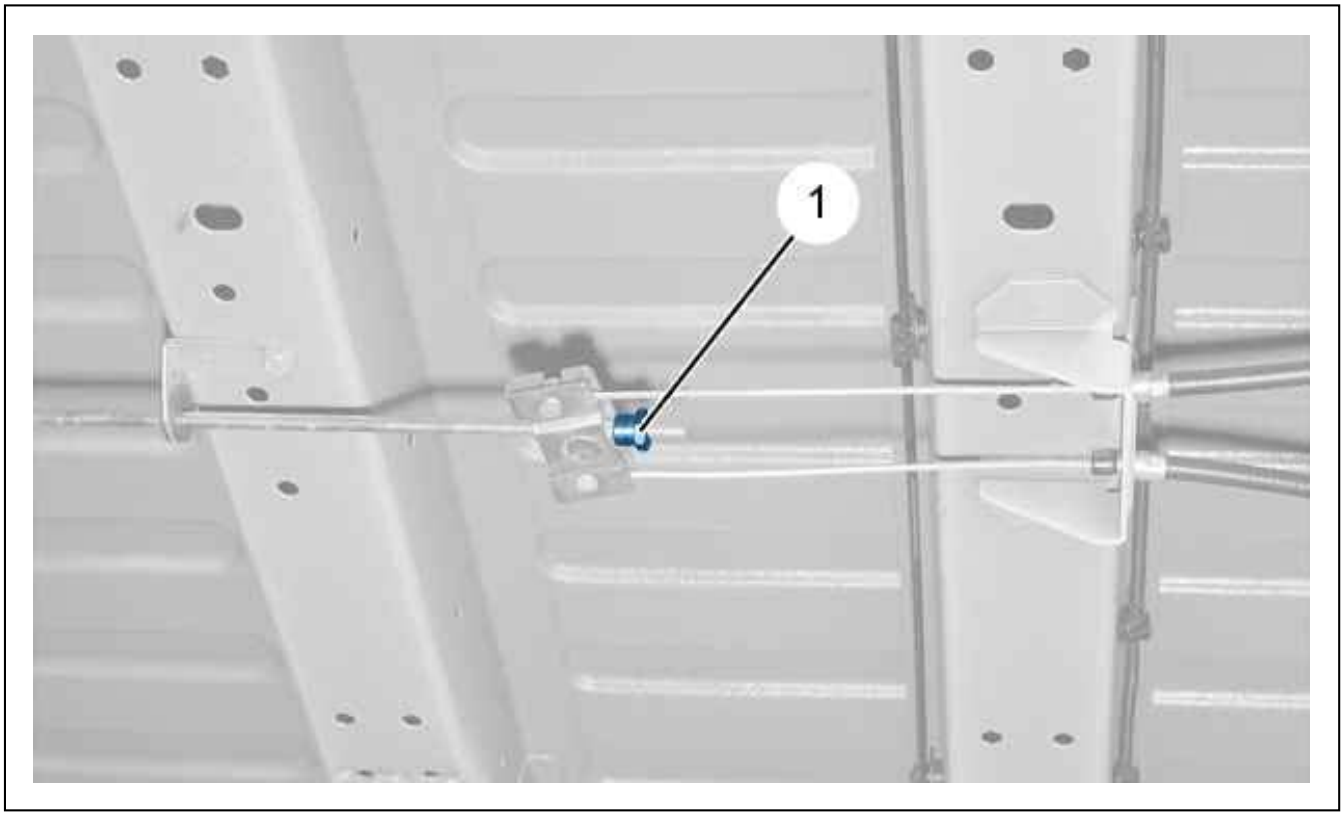

Figure : B3FP7NWD

Slacken the nut (1) in order to release the tension of the handbrake cable.

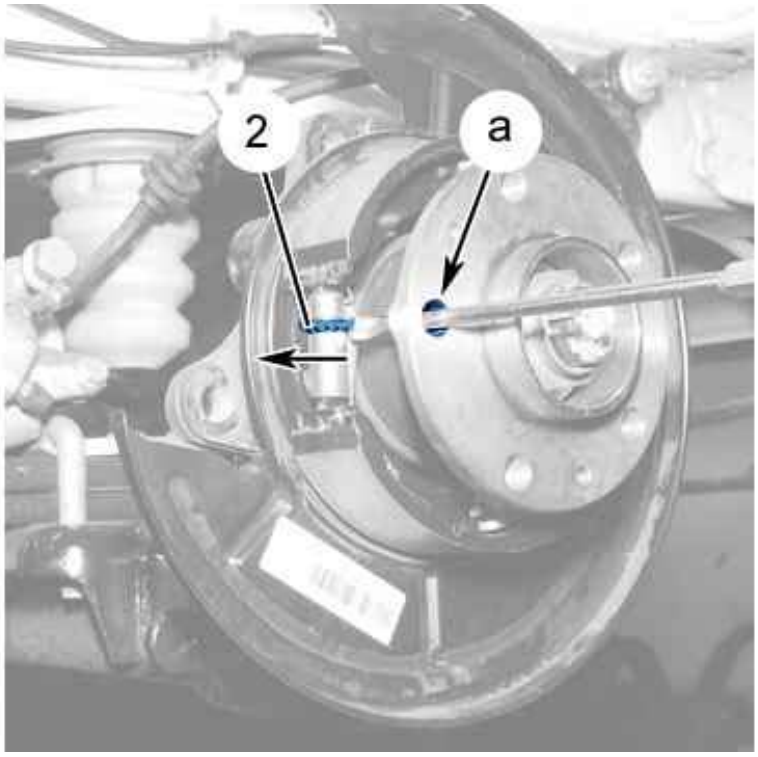

Figure : B3FP7NXD

Position the hole "a" opposite the toothed wheel (2) of the adjustment mechanism.
Turn the toothed wheel (2) to the left, to lock the rotation of the brake disc.
Release the disc by turning the toothed wheel (2) 5 ± 1 teeth in the opposite direction.

N.B. : The variation in the diameter of the shoes for 1 tooth is 0,035 mm. The clearance between the jaws and the brake drum should be 0,2 ± 0,04 mm.

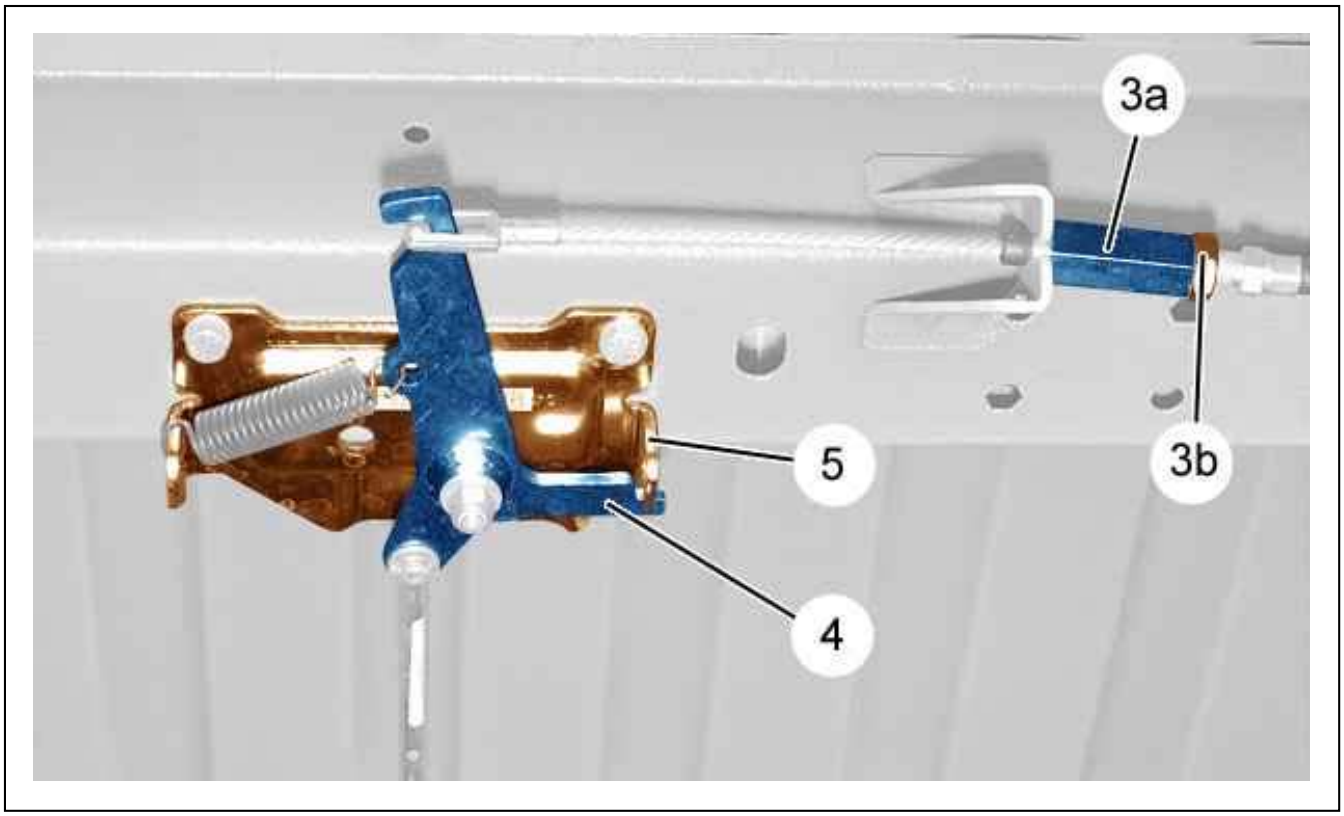

Figure : C5DP07JD

Slacken the locknut (3b).
Screw the nut (3a) until the lever (4) lifts slightly off the stop (5).
Tighten the locknut (3b).

CAUTION : Respect the tightening torque for the nut (1).

Tighten :

- The handbrake to the 6th notch
- The nut (1) to 1,5 m.daN

Pull the parking brake lever firmly 4 to 5 times.
Position the handbrake to the 6th notch.
Tighten the nut (1) to 1,5 m.daN.
Check that the rear brakes are applied.
With the handbrake released, check that the wheels can be turned freely by hand.
Refit the rear wheels.
Return the vehicle to its wheels.
Tighten the wheel bolts .

REMOVING - REFITTING : STOPLAMP SWITCH

1. Removing

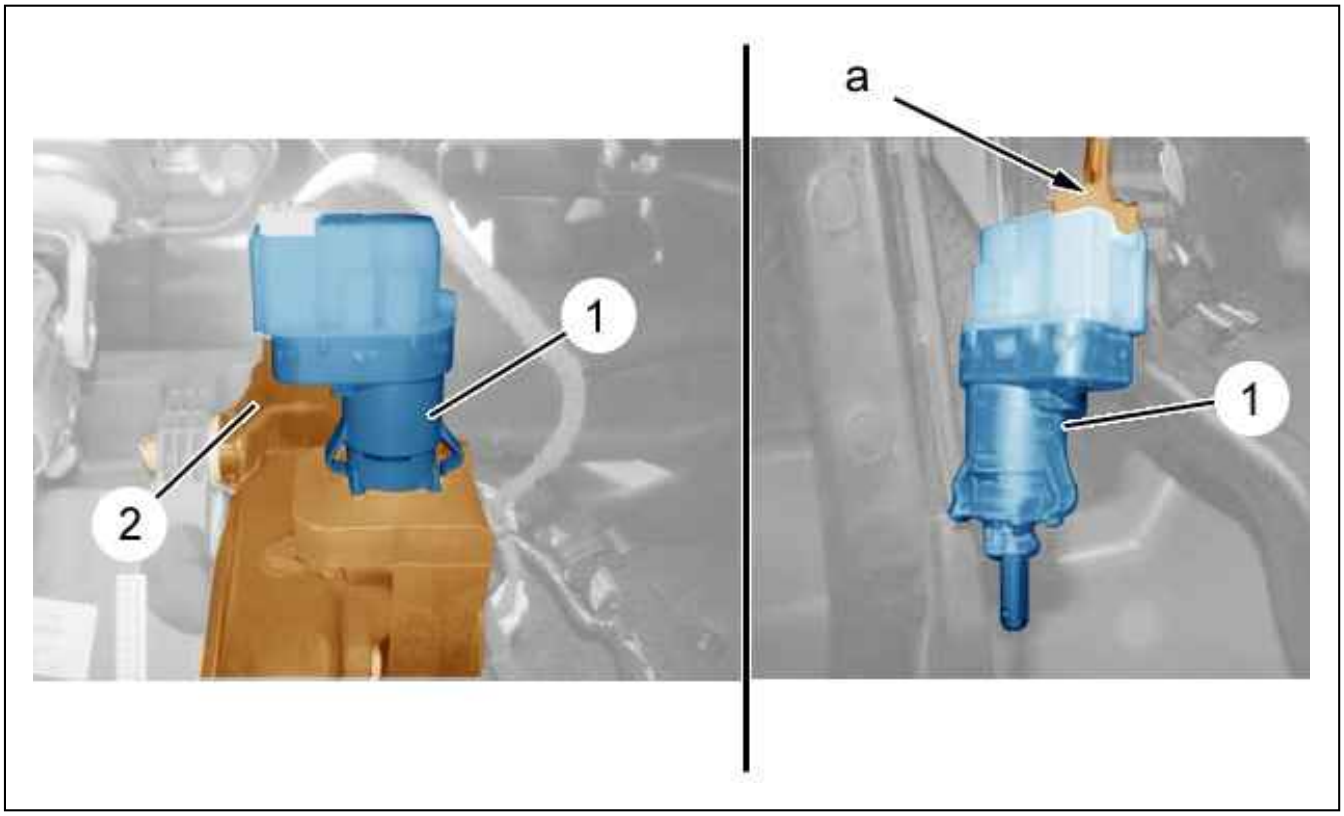

Figure : B3FG1Z0D

Turn : The stop lamp connector (1) (Clockwise).
Disengage the stoplamp switch (1) from the pedal bracket (2).
Disconnect the connector (at "a").

2. Refitting

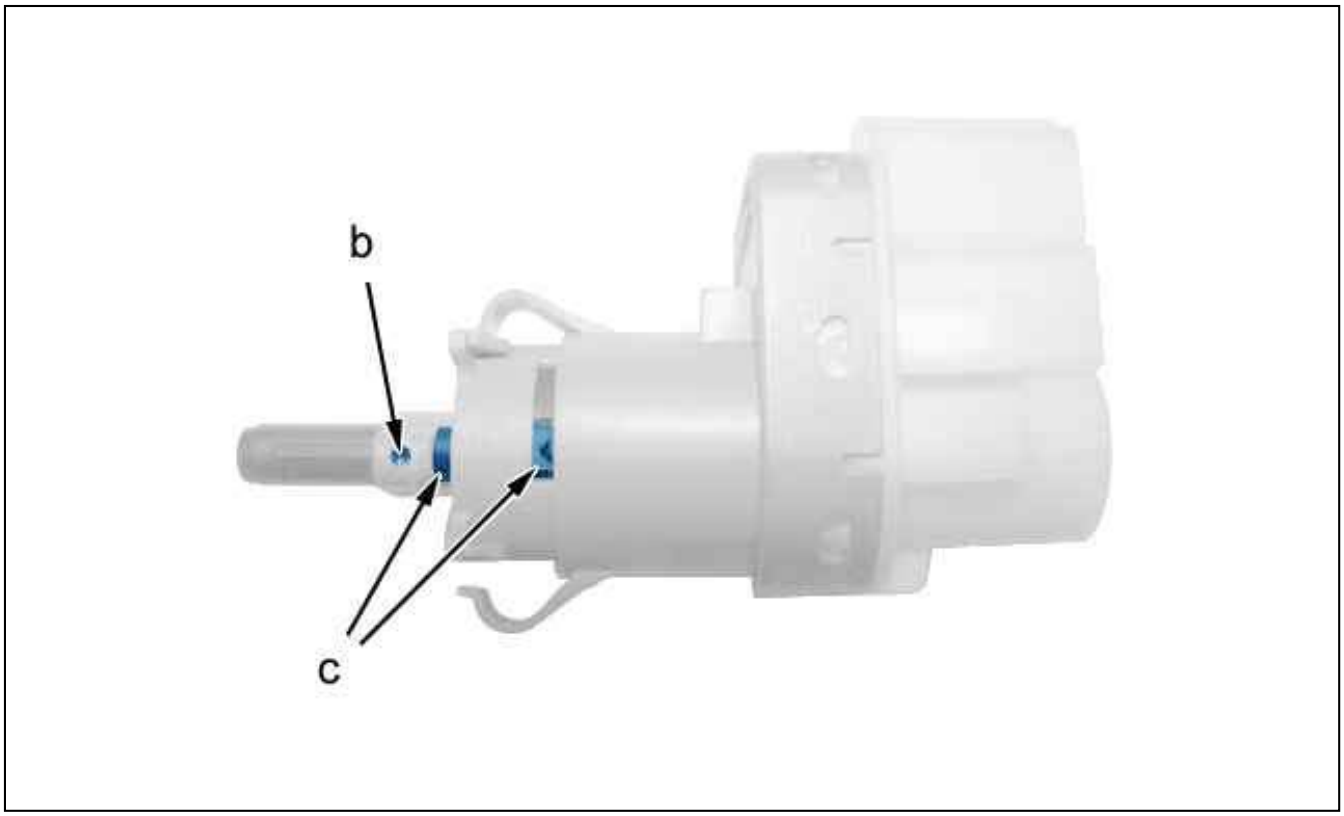

Figure : B3FG1Z3D

Line up the lug at "c" with the boss "b" on the stoplamp switch (if necessary).
Reconnect : The connector (at "a").
Engage the stoplamp switch (1) on the pedal bracket (2).
Turn : The stop lamp connector (1) (Anti-clockwise).
Verify :

- That the stoplamp switch is on securely
- The switching on of the brake lamps

REMOVING - REFITTING : VACUUM PUMP

ESSENTIAL : Observe the safety and cleanliness recommendations .

1. Tooling

tool	Reference	Designation
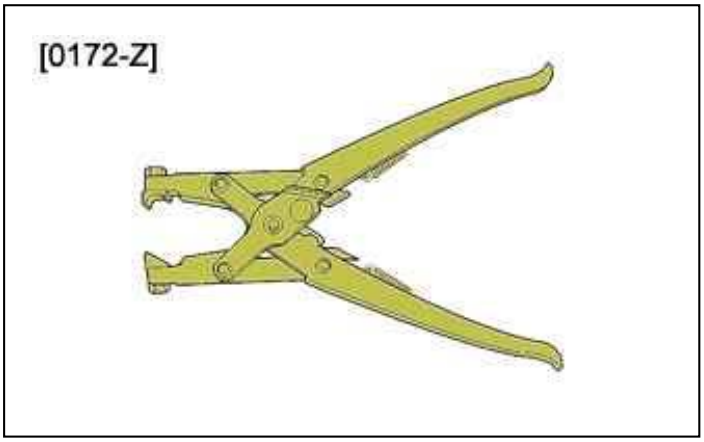 Figure : E5AI00DT	[0172-Z]	pliers for elastic clips
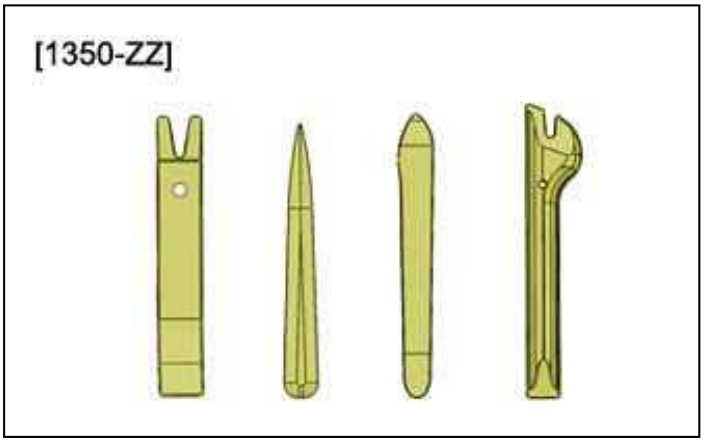 Figure : E5AG02MT	[1350-ZZ]	Stripping tools

2. Removing

Disconnect the negative terminal of the service battery.
Drain the engine cooling circuit.

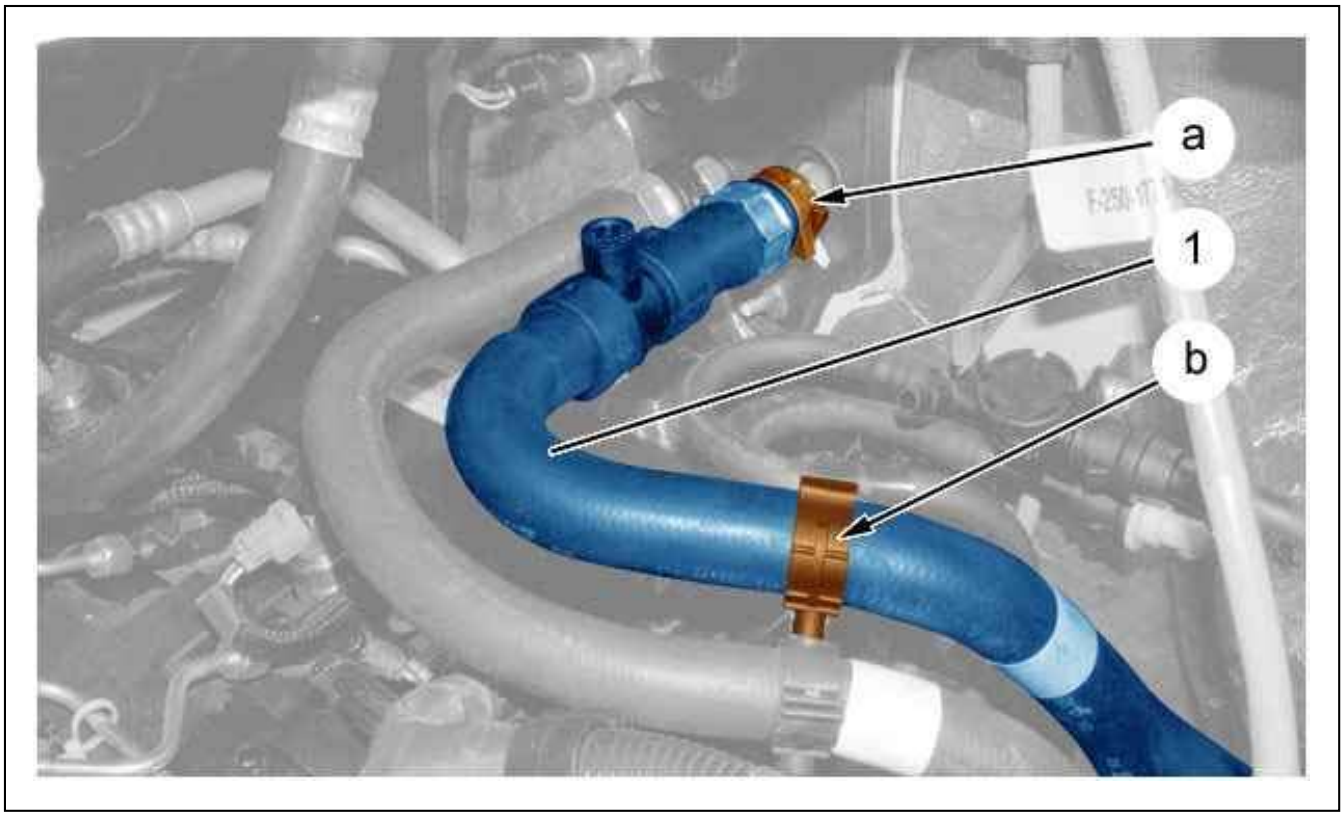

Figure : B3FG2D5D

Uncouple the pipe (1) (at "a").
Unclip the pipe (1) (at "b").

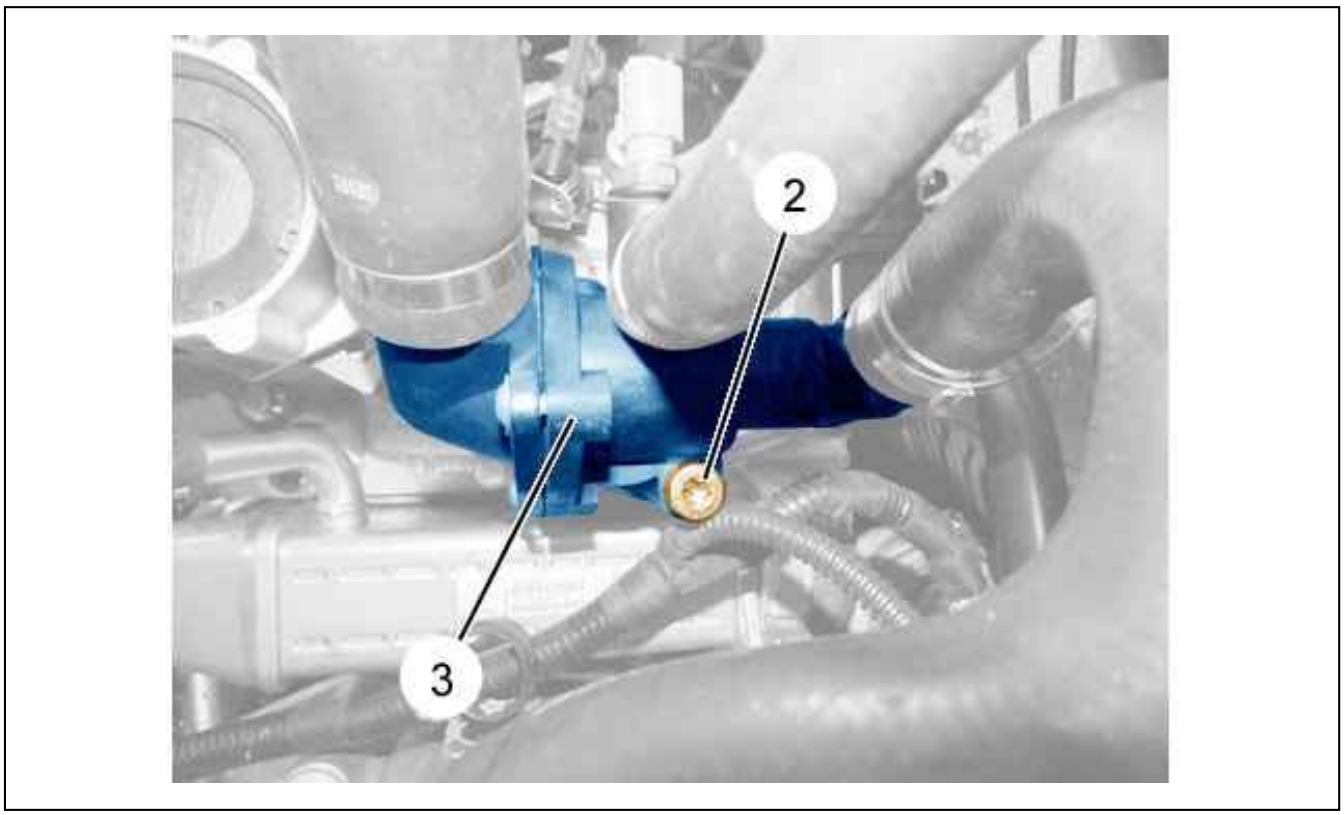

Figure : B3FG24ED

Remove the bolt (2).

Move aside the union (3).

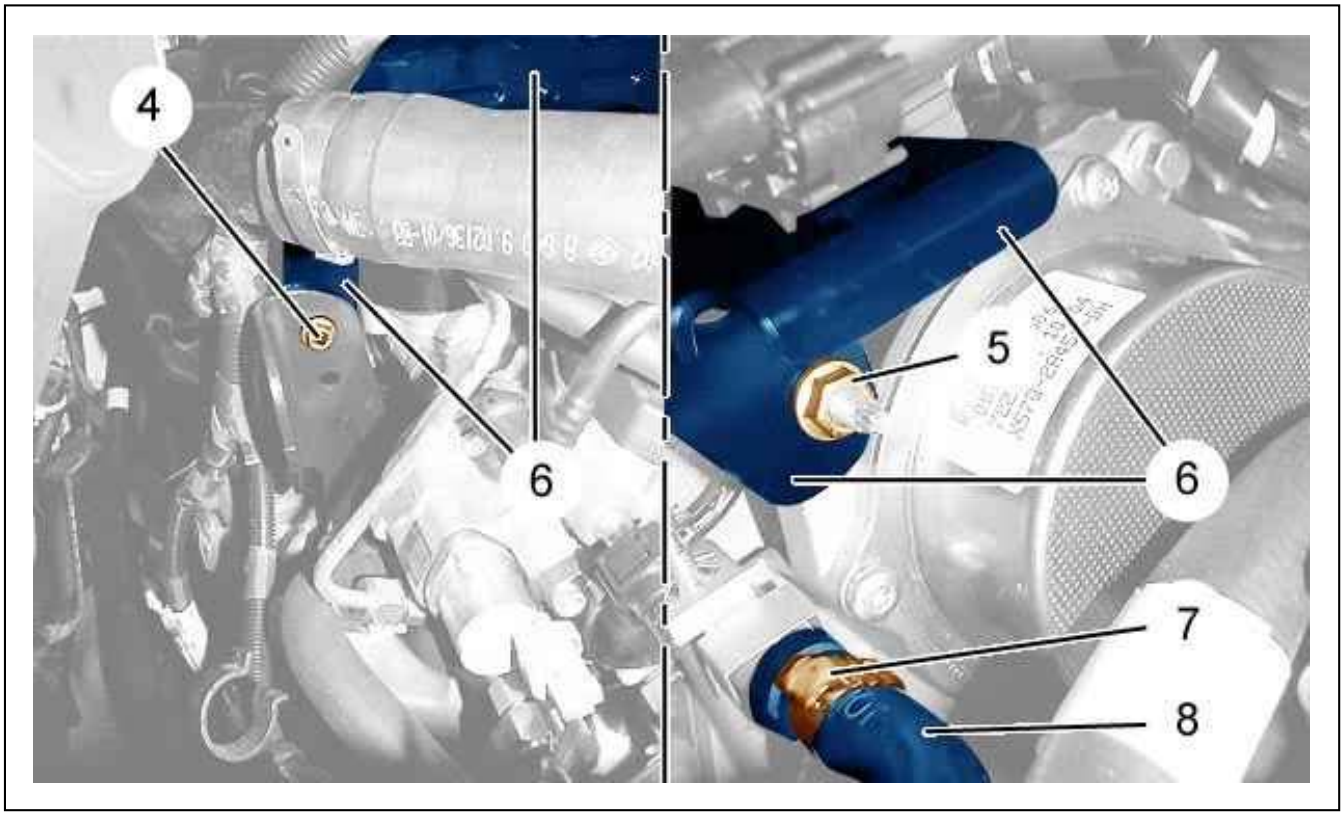

Figure : B1BPRTPD

Remove the nuts (4) and (5).
Move aside the baseplate (6).
Uncouple :

- The clip (7) ; Using tool [0172-Z]
- The pipe (8)

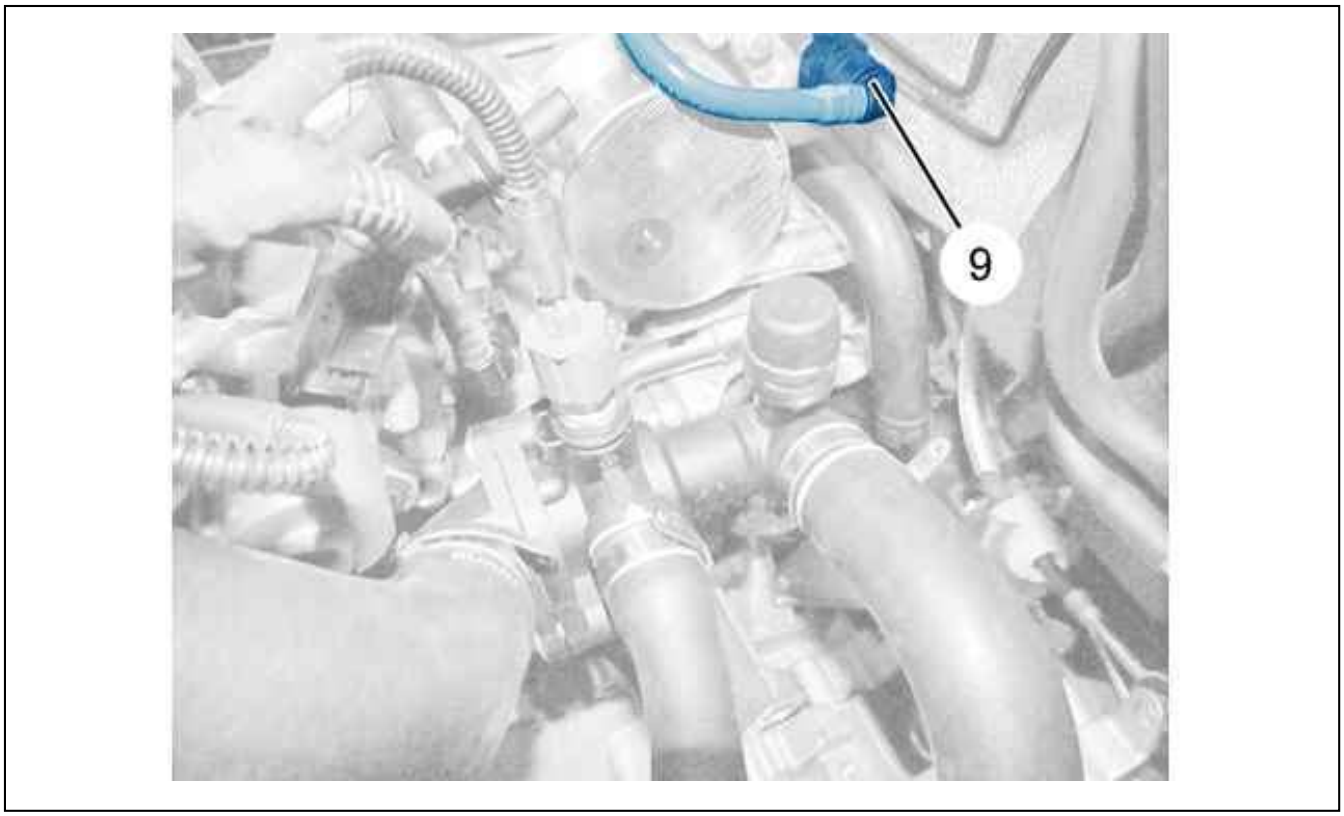

Figure : B3FG24FD

Uncouple the vacuum pipe (9).

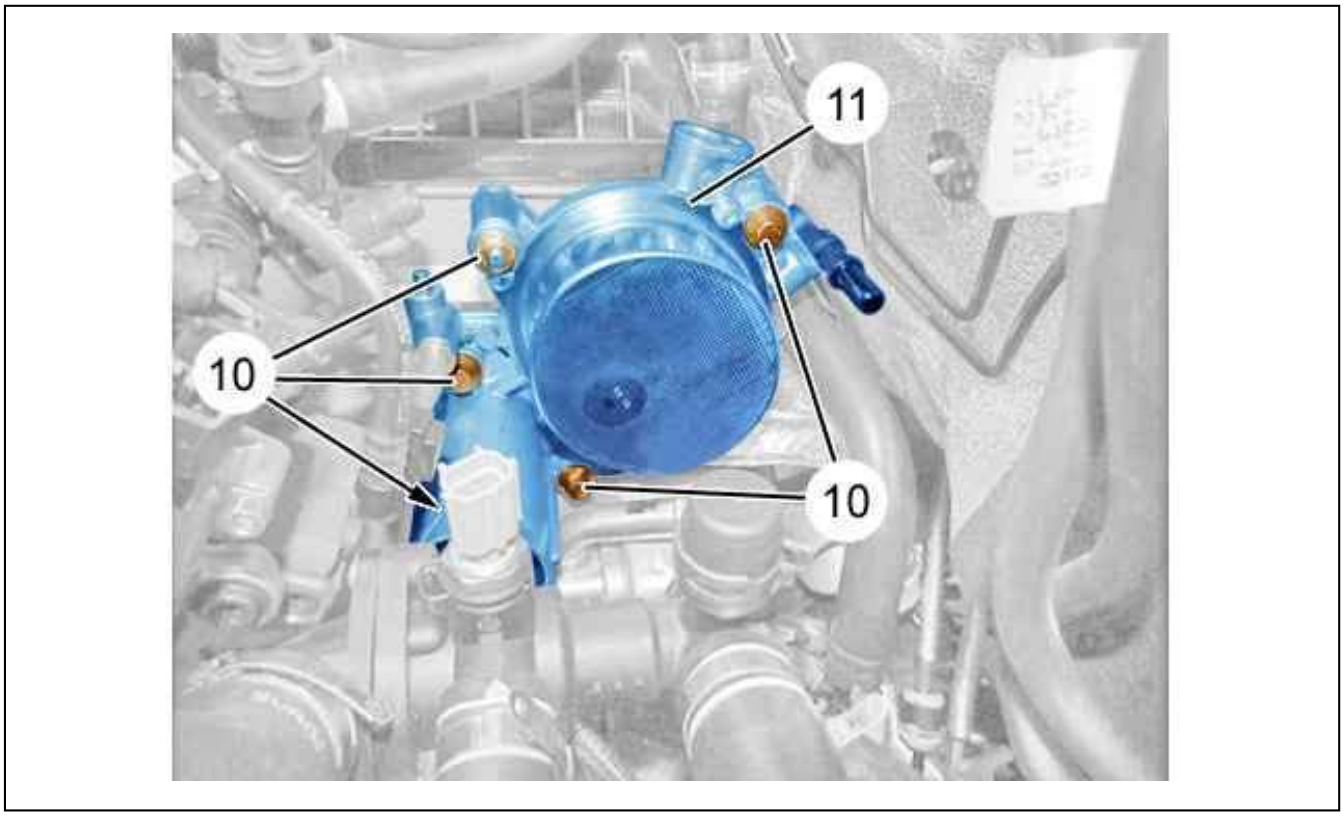

Figure : B3FG24GD

Remove :

- The 5 bolts (10)

- The vacuum pump (11)



Figure : B3FG24HD

Remove the seal (12).

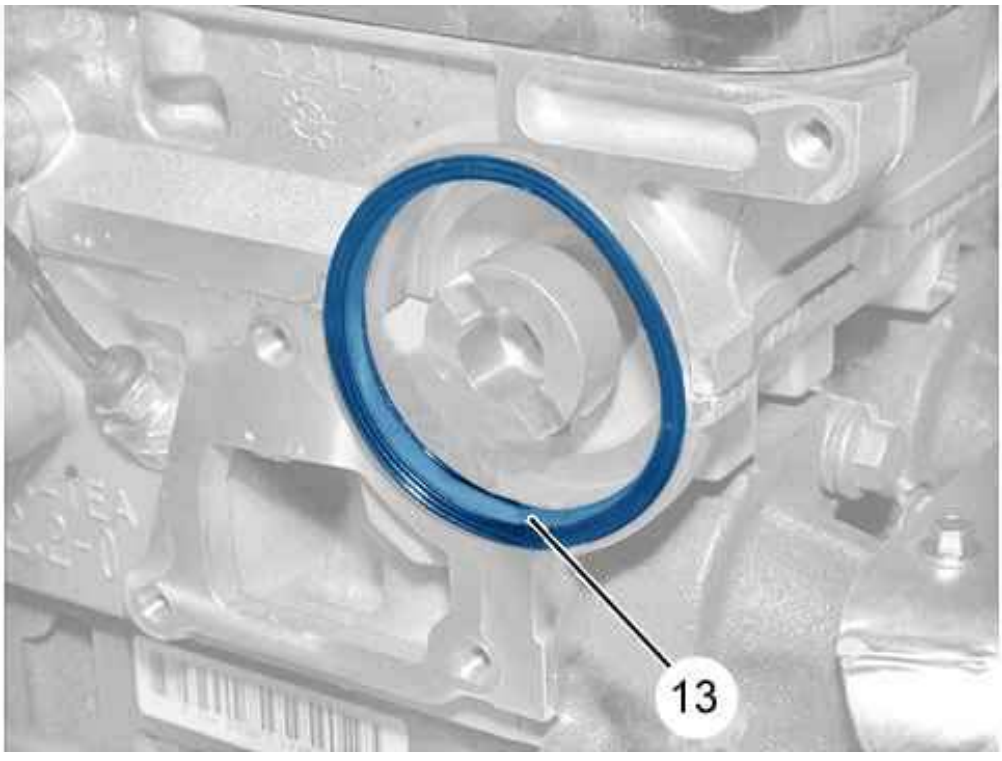

Figure : B3FG2D4D

Remove the seal (13) ; Using tool [1350-ZZ].

3. Refitting

CAUTION : Adhere to the tightening torques .

CAUTION : Systematically replace seals (13), (12).

Clean the joint faces.

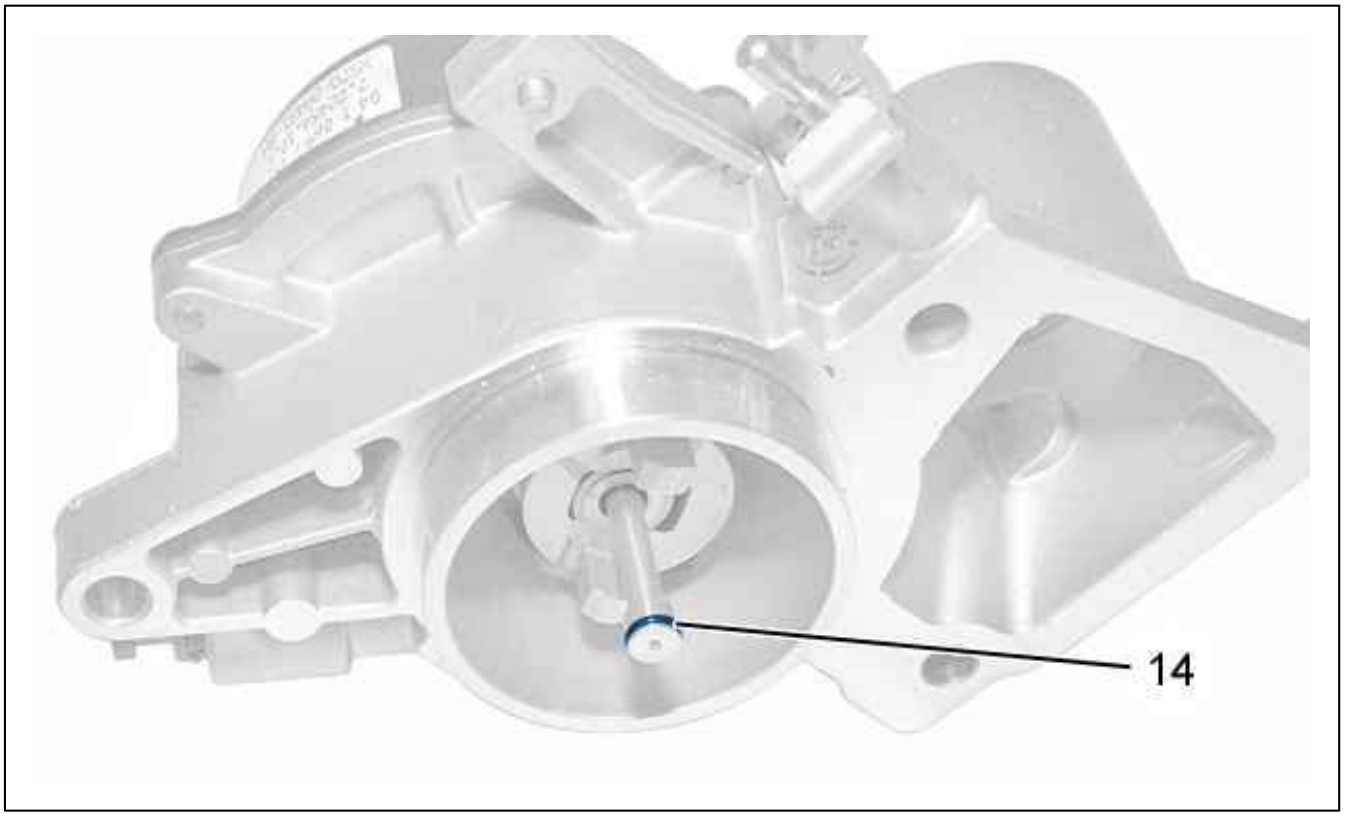

Figure : B3FG24JD

Replace the joint (14) (if necessary).
Refit :

- The seal (13) (new) ; Using a mallet
- The seal (12) (new)
- The vacuum pump (11)
- The bolts (10)

Couple up the vacuum pipe (9).
Couple up :

- The pipe (8)
- The clip (7) ; Using tool [0172-Z]

Position the retaining plate (6).
Refit :

- The nut (4)
- The nut (5)

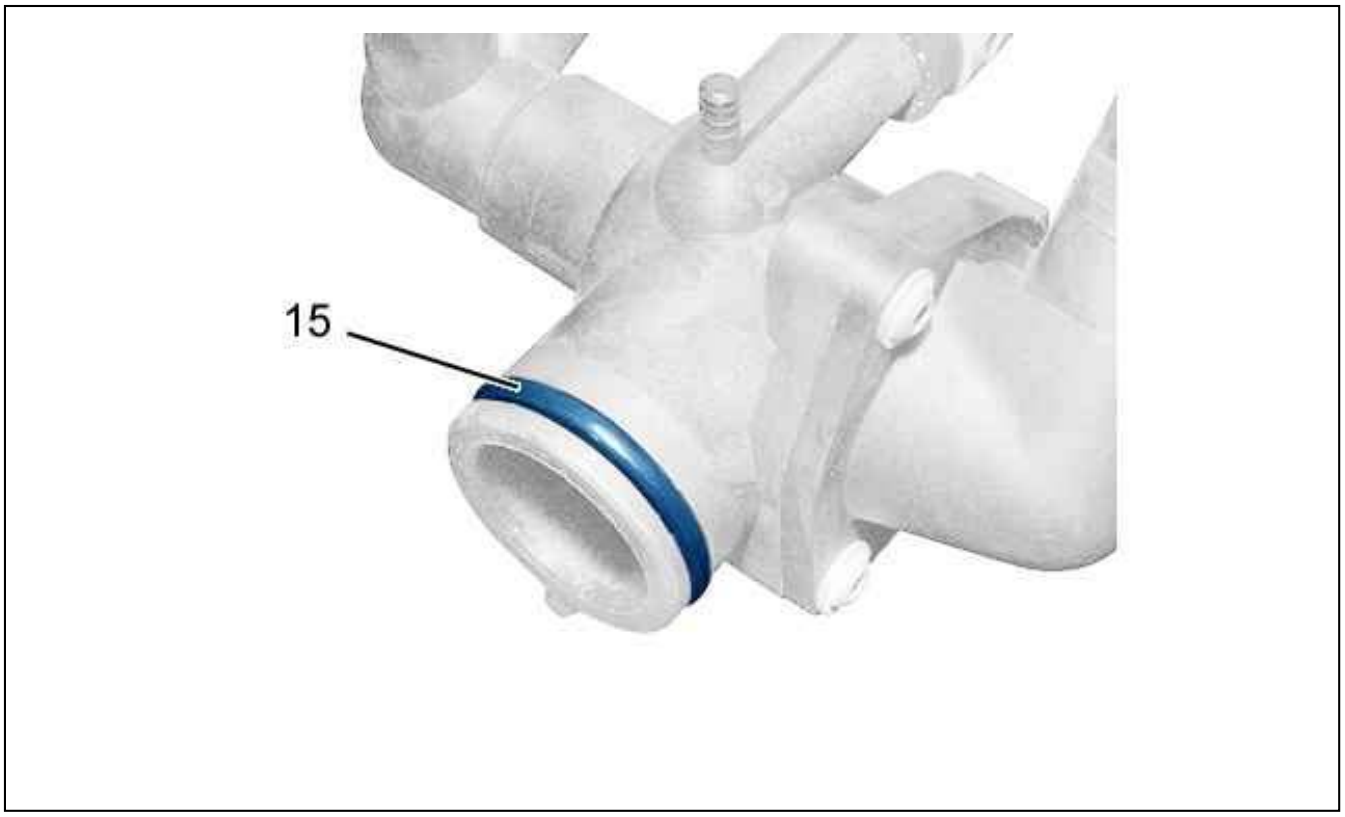

Figure : B3FG24KD

Replace the union (3) seal (15).
Position the union (3) (with its new seal (15)).
Refit bolt (2).
Connect the hose (1) (at "a").
Clip the hose (1) (at "b").
Fill and bleed the engine cooling circuit.

CAUTION : Perform the operations that are required following a reconnection of the ancillaries battery.

Reconnect the negative terminal of the ancillaries battery.

REMOVING - REFITTING : FRONT BRAKE DISC

ESSENTIAL : Observe the safety and cleanliness recommendations .

ESSENTIAL : Always replace the brake pads if replacing the discs.

1. Removing

Release the front wheel bolts.
Lift and support the vehicle with front wheels suspended.
Remove :

- The front wheels
- The brake pads (see the relevant operation)

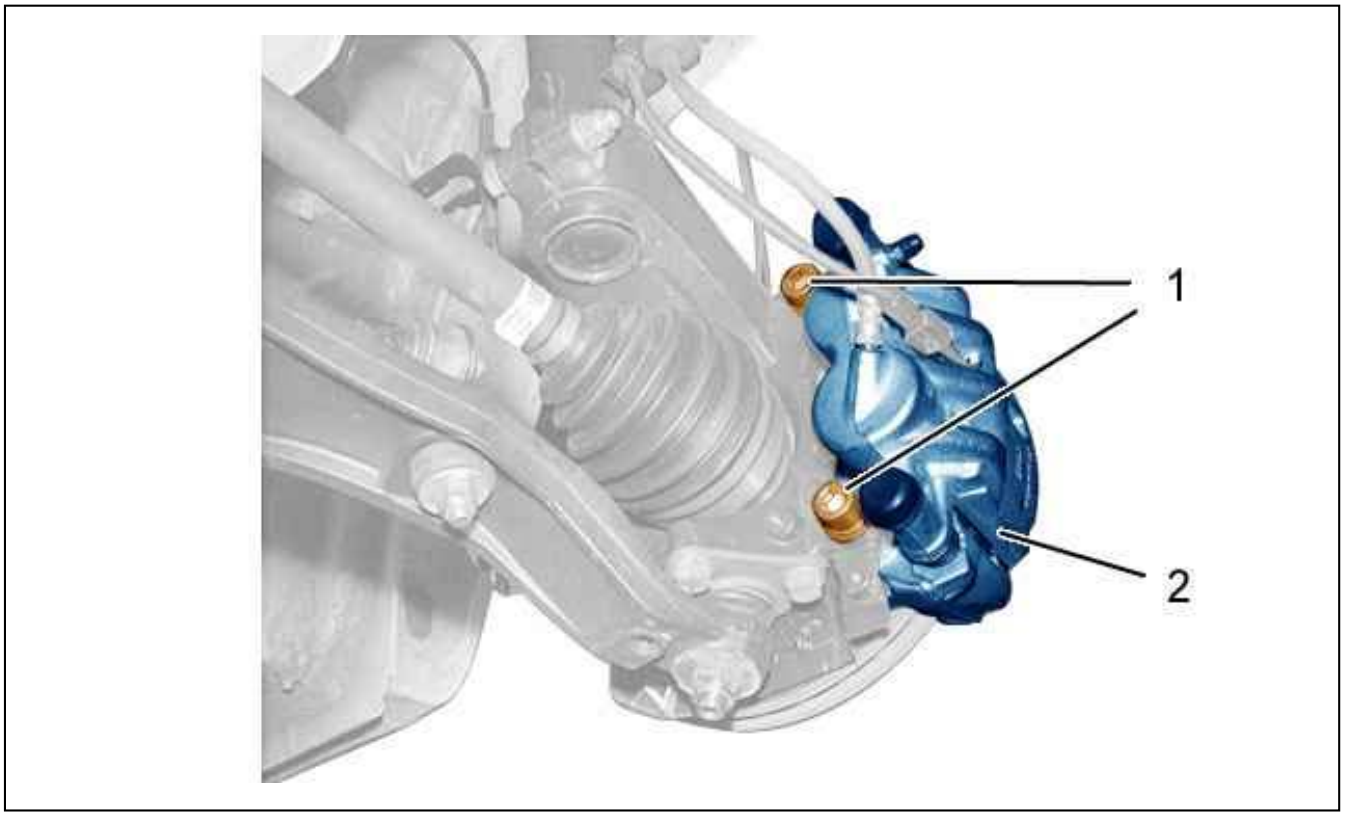

Figure : B3FG242D

Remove the bolts (1).
Disengage the brake caliper (2).
Leave the caliper hanging (2).

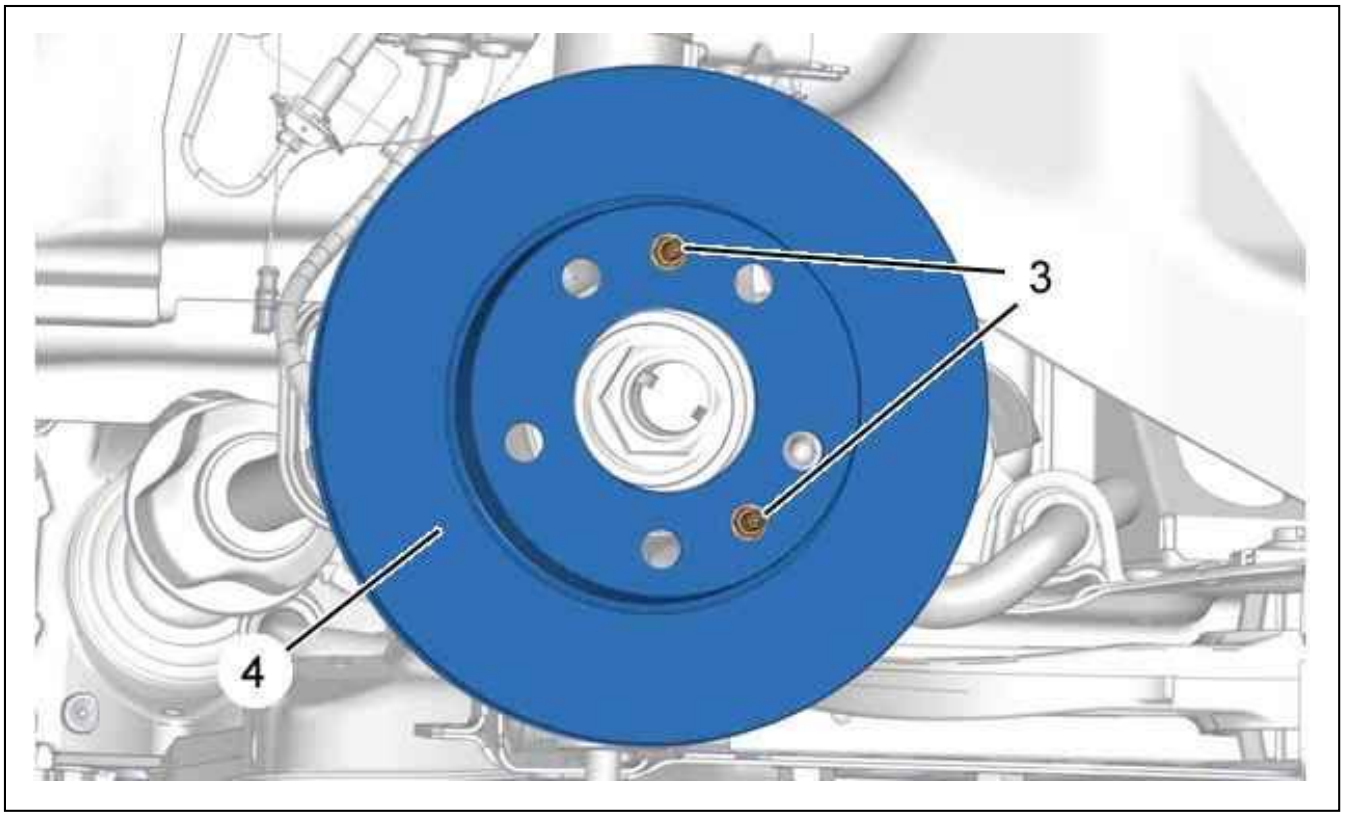

Figure : B3FG243D

Remove :

- The bolts (3)
- The brake disc (4)

2. Cleaning

ESSENTIAL : Do not use compressed air to clean the brakes.

2.1. 1st possibility

Clean the brake disc (4) and the brake caliper (2) ; With a recommended brake cleaning product.
Allow to dry and to drain.
Wipe ; Using a paper cloth.

2.2. 2nd possibility

Use an approved dedusting instrument (see tools and equipment catalogue).
Visually check :

- Around the pistons for leak
- That the protective gaiters are in good condition and correctly adjusted
- The wear of the brake disc (4)

Check the operation of the brake caliper (2).

3. Refitting

CAUTION : Adhere to the tightening torques .

Refit :

- The brake disc (4)
- The bolts (3)

Tighten the bolts (3).
Position the brake caliper (2).
Refit the bolts (1) (new) (pre-coated with a thread locking product).
Tighten the bolts (1).
Refit :

- The brake pads (see the relevant operation)
- The front wheels

Return the vehicle to its wheels.
Tighten the wheel bolts .

REMOVING - REFITTING : FRONT BRAKE PADS

ESSENTIAL : Observe the safety and cleanliness recommendations .

1. Tooling

Pliers FACOM D60A.

2. Removing

Untighten the wheel screws (front).
Lift and support the front of the vehicle.
Remove the front wheels.

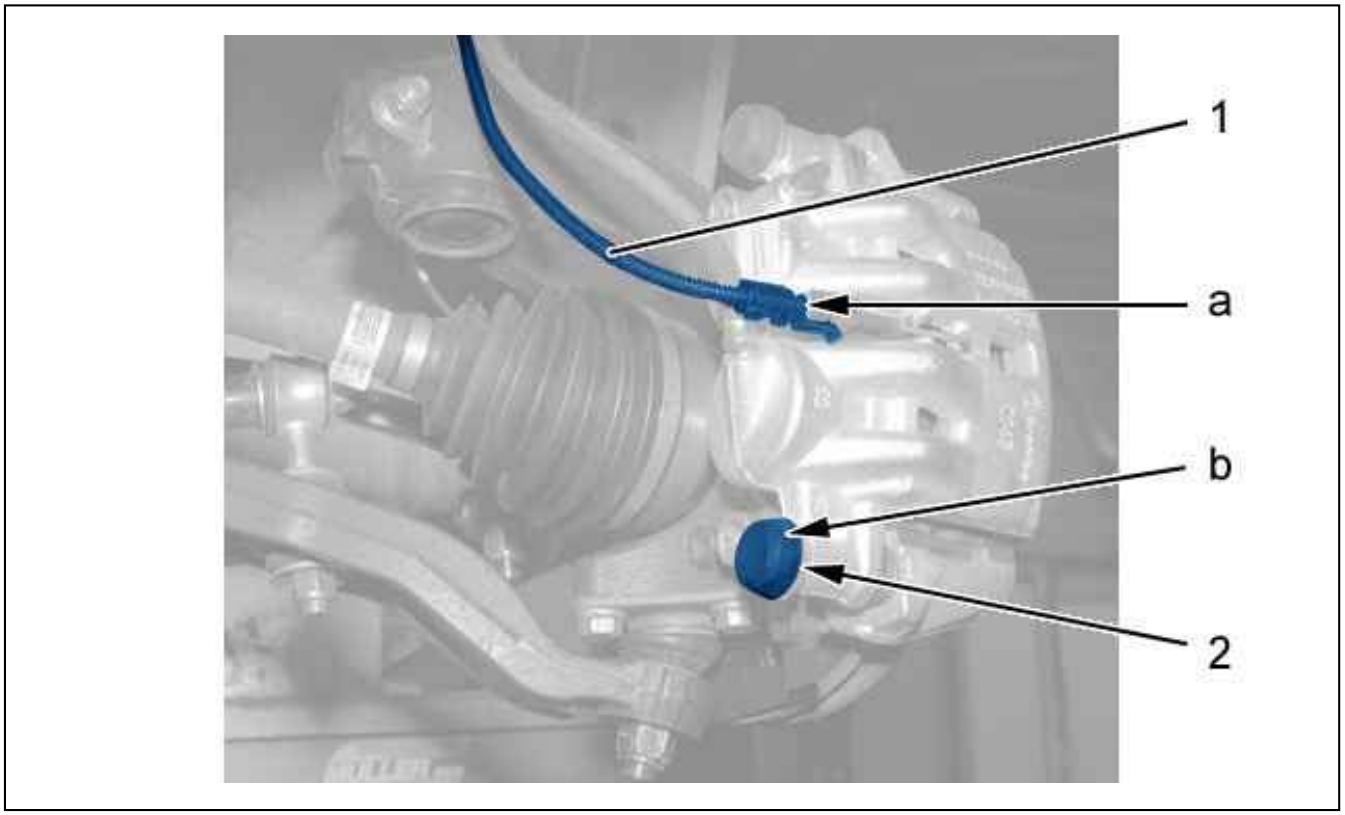

Figure : B3FP7JKD

Disconnect the electrical harness (1) (Brake pads worn warning light) (at "a").
Remove :

- The rubber gaiter (at "b")
- The pillar screw (2)

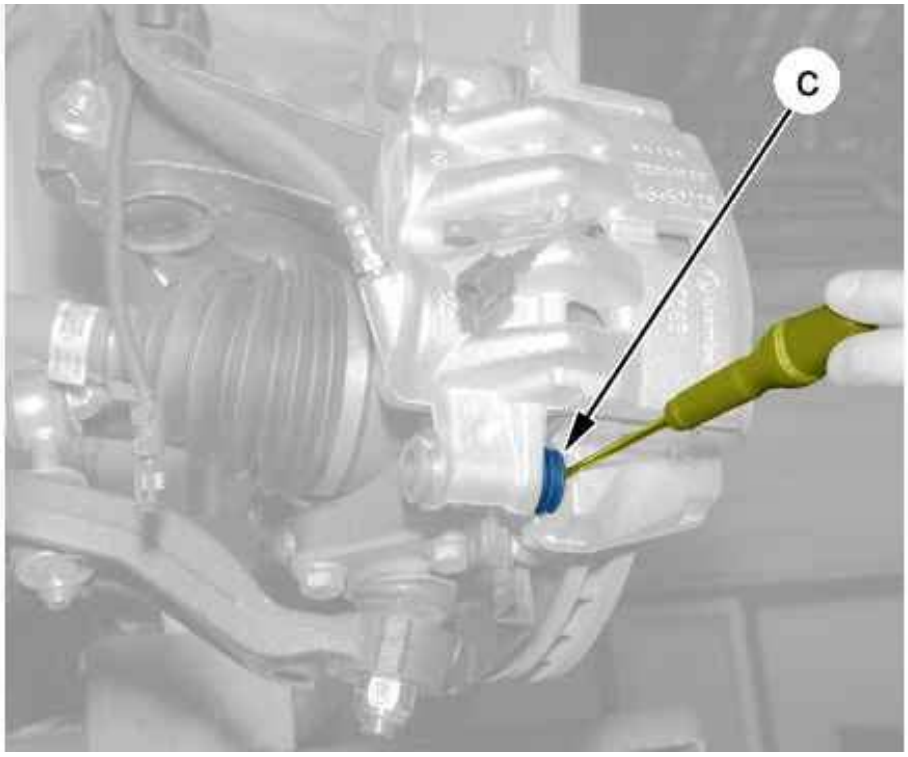

Figure : B3FP7JLD

Push back the stud (as "c") ; By means of a screwdriver.

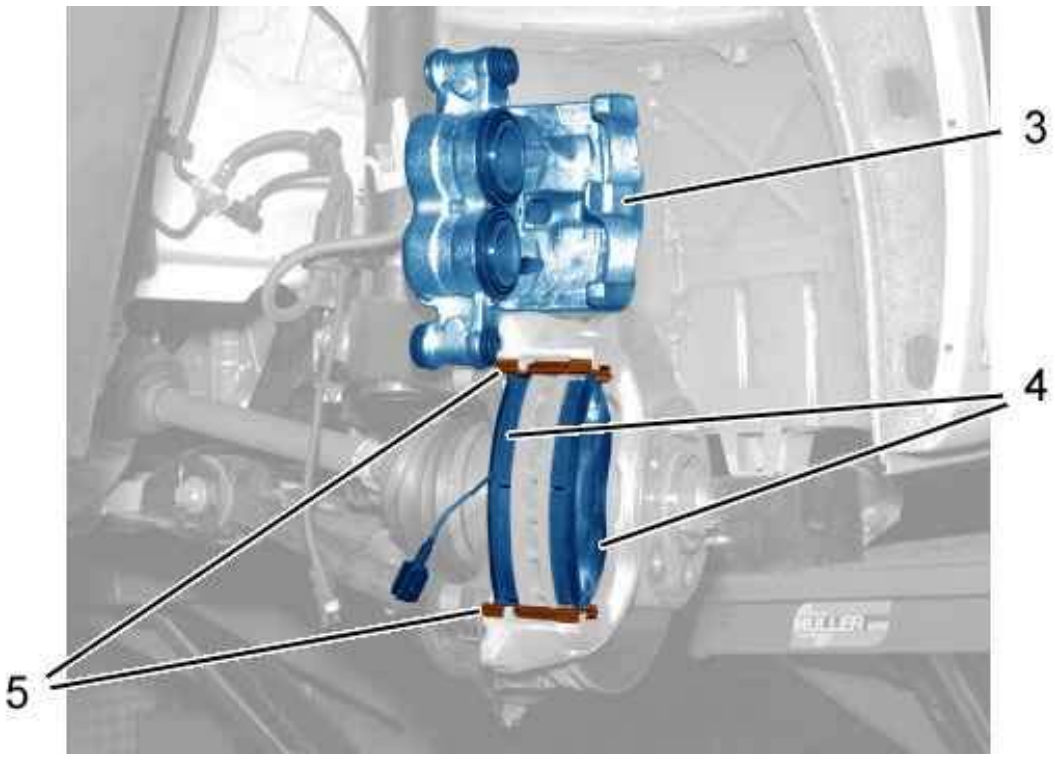

Figure : B3FP7JMD

Tilt the brake caliper (3).
Remove :

- The brake pads (4)
- The springs (5)

Push the pistons back ; Using FACOM D60A pliers.

CAUTION : Check the brake fluid level.

3. Cleaning

ESSENTIAL : Do not use compressed air to clean the brakes.

3.1. 1st possibility

Clean the brake disc and caliper (3) ; With a recommended brake cleaning product.
Allow to dry and to drain.
Wipe ; Using a paper cloth.

3.2. 2nd possibility

Use an approved dedusting instrument (see tools and equipment catalogue).
Visually check :

- Around the pistons for leak
- That the protective gaiters are in good condition and correctly adjusted
- The disc for wear

Check the sliding of the brake caliper studs (3).

4. Refitting

CAUTION : Adhere to the tightening torques .

Check the condition of the stud gaiters.
Refit :

- The springs (5)
- The brake pads (4)

Fold back the brake caliper (3).
Refit : The new stud (2) (Pre-coated with a thread-locking product).
Tighten : The pillar screw (2).
Replace the rubber protector (at "b").
Connect the electric harness (1) (Brake pads worn warning light) (at "a").

CAUTION : Apply the brakes, with the engine running, several times before driving the vehicle.

Check the operation of the brakes.
Check the brake fluid level and top up if necessary.
Fit the wheels.
Return the vehicle to its wheels.
Tighten the wheel bolts .

REMOVING - REFITTING : PARKING BRAKE CABLES

ESSENTIAL : Observe the safety and cleanliness recommendations .

1. Preliminary operation

Place the vehicle on a two-post lift.
Disconnect the battery.

2. Handbrake primary cable

2.1. Removing

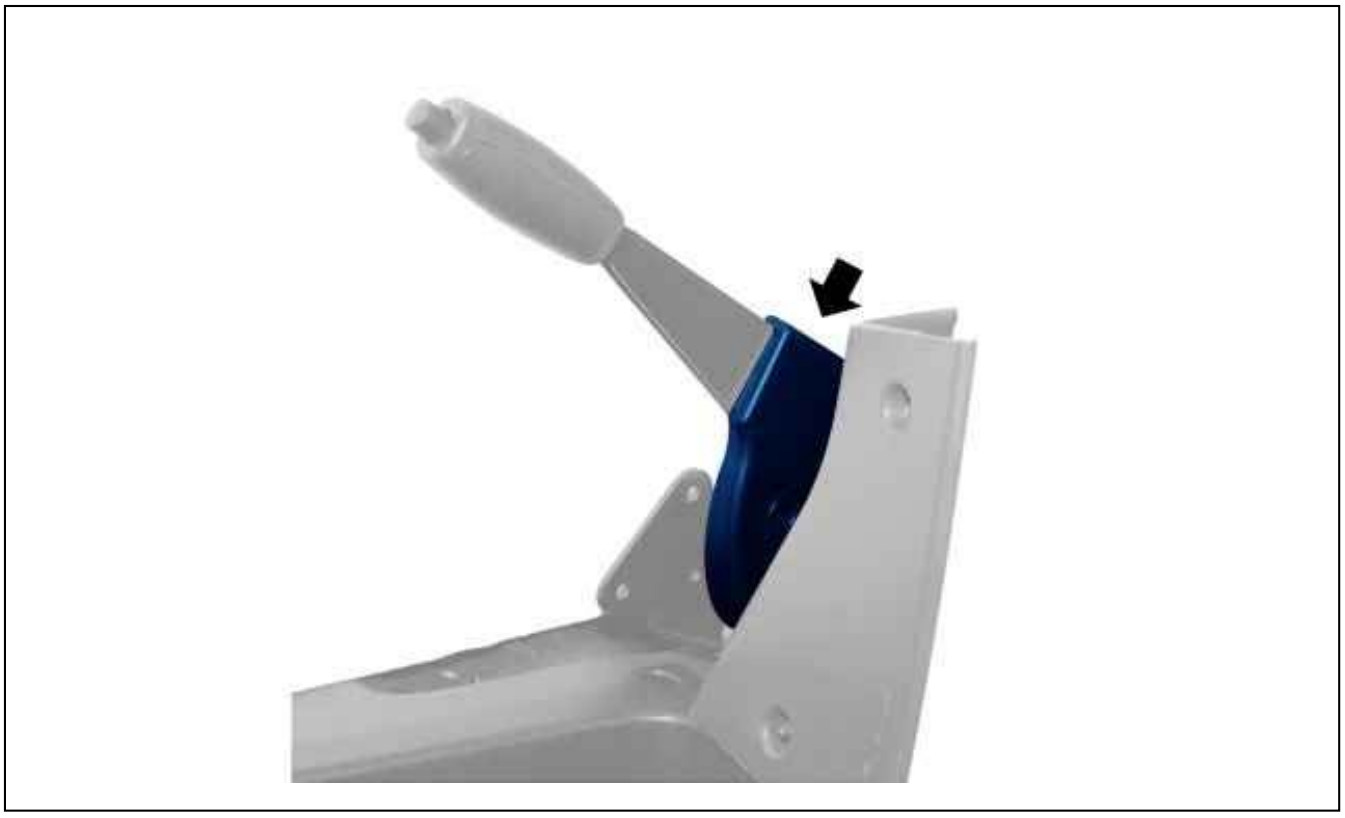

Figure : B3FP7JND

Remove the handbrake control lever trim .

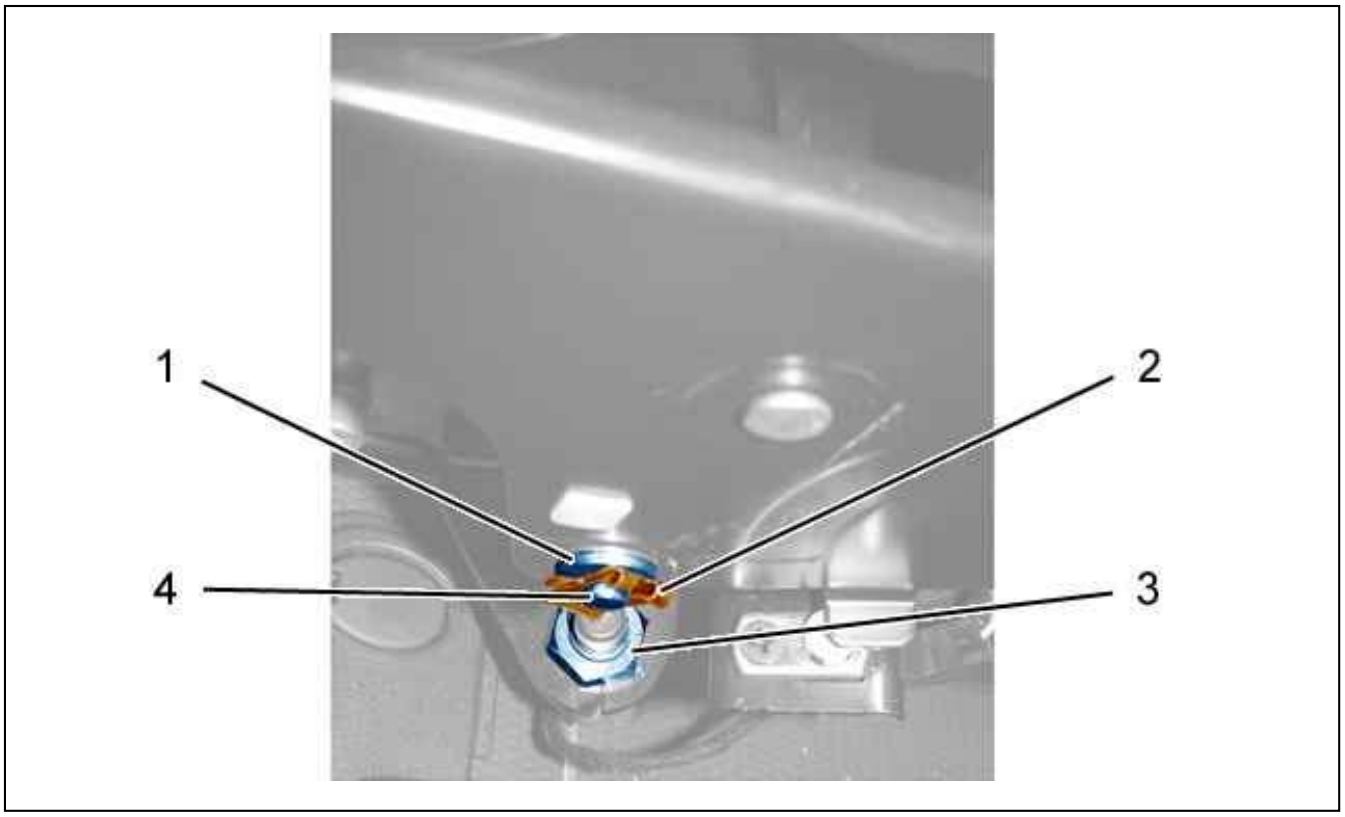

Figure : B3FG1YUD

Remove :

- Locking clip (2)
- The washer (1)
- The shaft (4)

Unscrew nut (3).
Atach the cable yoke with a thin thread.

N.B. : This is necessary to facilitate the fitment of the new cable.

Move both the yoke and nut (3) away from the base of the control lever.

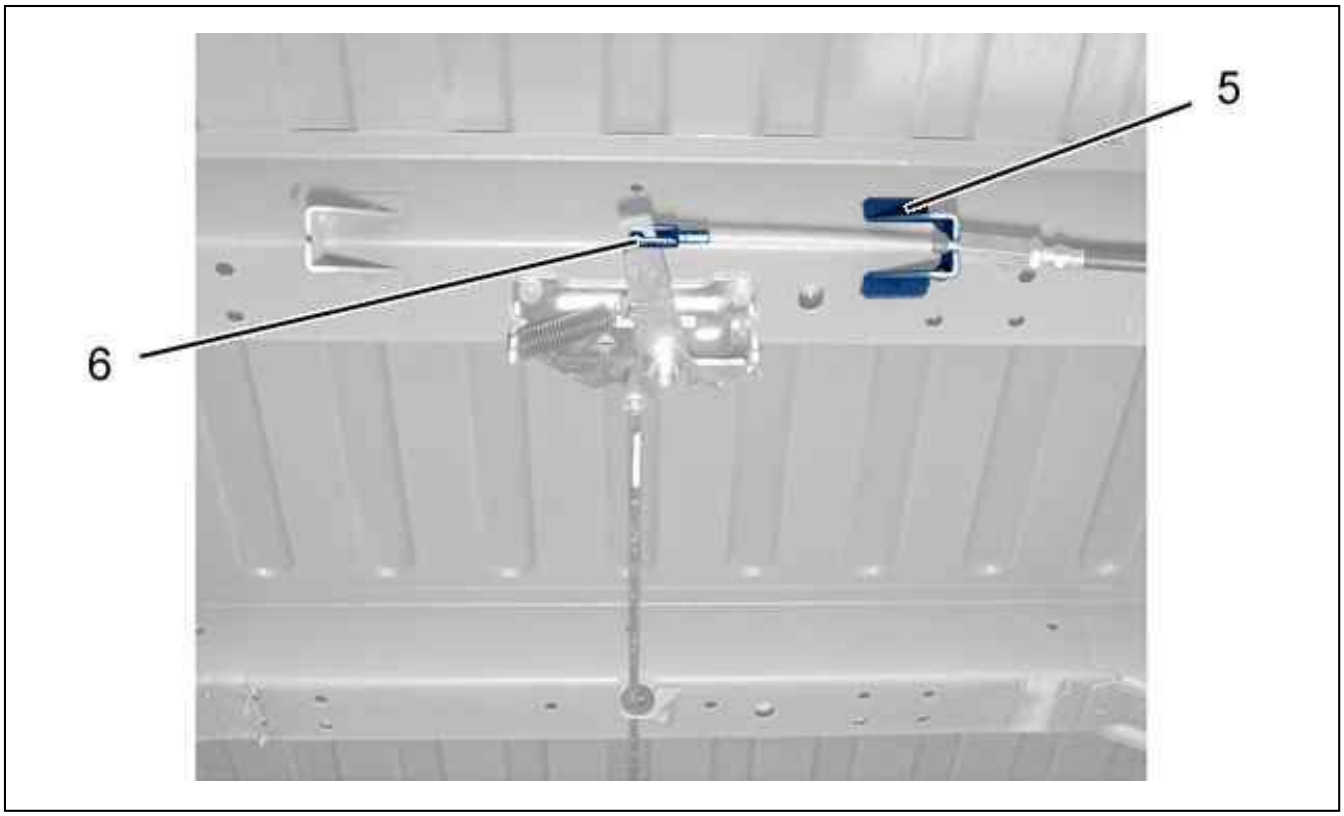

Figure : B3FG1YWD

Disengage the sheath from retaining base (5).
Uncouple yoke (6) from the balance lever.

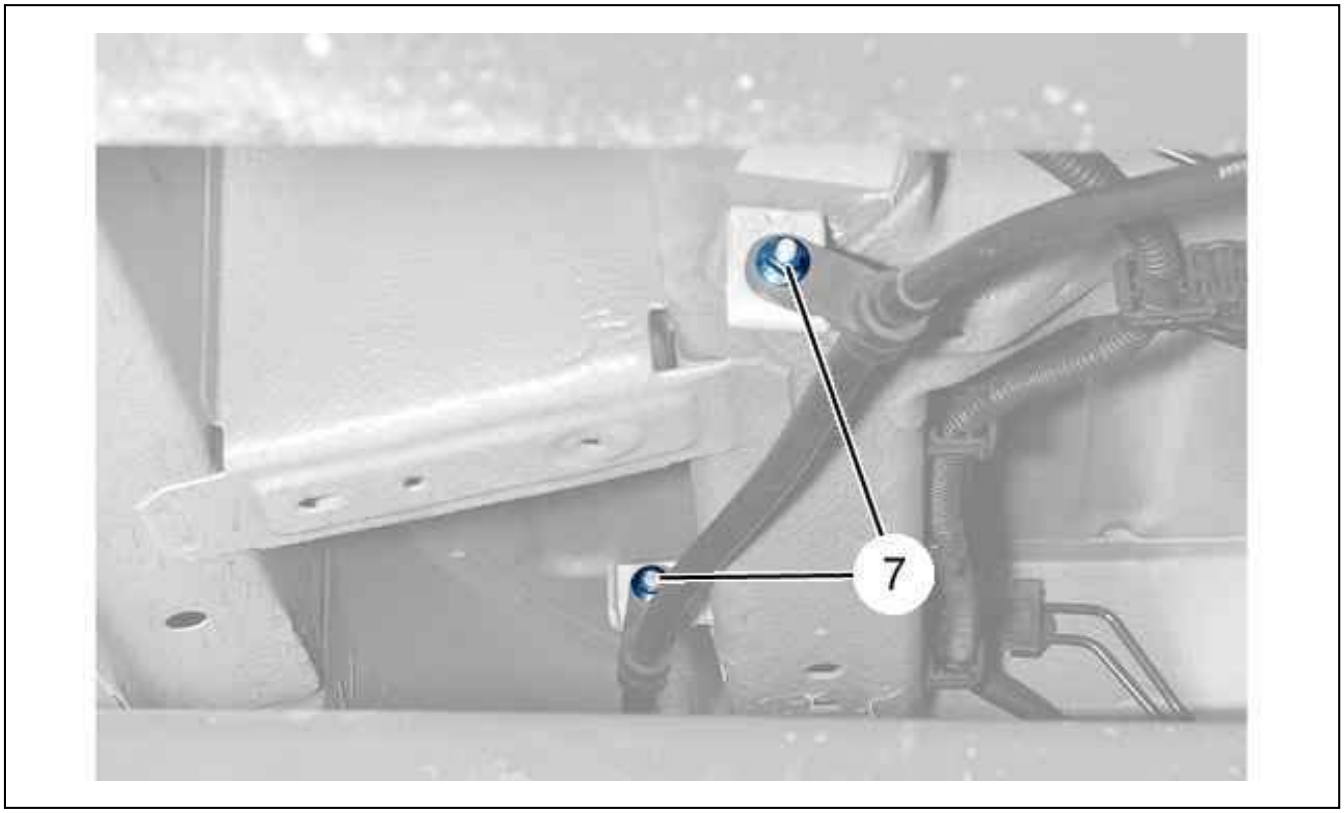

Figure : B3FG1YZD

Remove the nuts (7).

Remove the cable from under the vehicle, taking care not to cut off the thread during the operation.
As soon as the cable is entirely disengaged from the bodyshell, detach the thread from the yoke.

2.2. Refitting

CAUTION : Adhere to the tightening torques .

N.B. : Use the thin thread, utilised during the removal, to put the new cable into place more easily.

Secure the free extremity of the thread to the cable yoke.
Pull the thread moderately, seeing to it that the cable engages easily.
Fit the nuts (7).
Engage : The sheath in the retaining base (5).
Couple the brake cable on the yoke (6).
Refit the nut (3).
Engage the cable in the handbrake lever .
Refit :

- The shaft (4)
- The washer (1)
- Locking clip (2)
- The handbrake control lever trim

3. Handbrake secondary cables

3.1. Removing

Unscrew the rear wheels.
Raise the vehicle and support on axle stands, wheels free.
Remove :

- The rear wheels
- The rear brake discs
- The rear hub bearings
- The parking brake shoes (on each side)

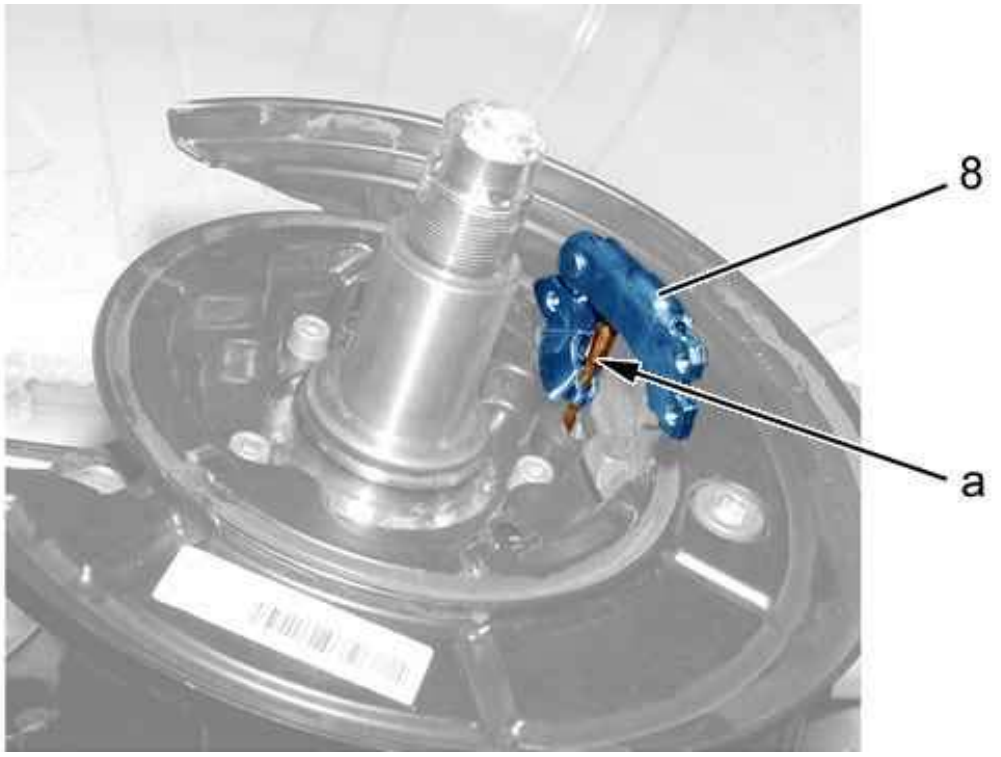

Figure : B3FP7JWD

each side :

- Disconnect the cable from the lever (8) (at "a")
- Remove : The lever (8)
- Uncouple the sheath from the support on the suspension blade

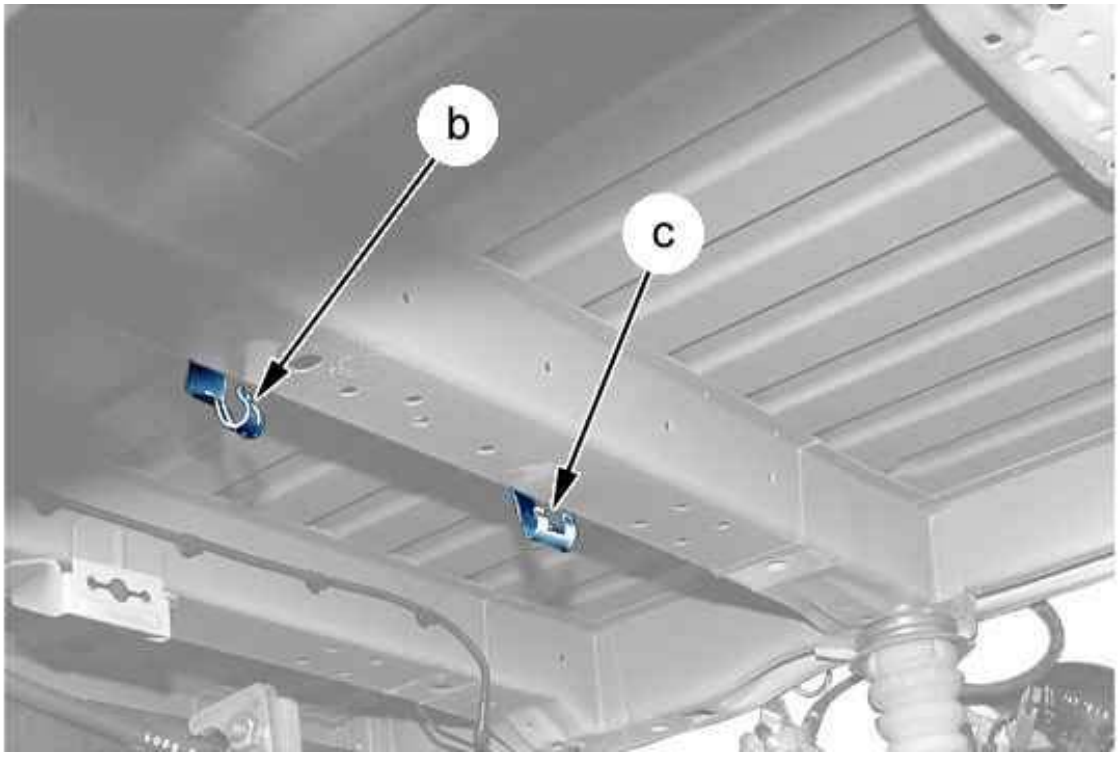

Figure : B3DP0DDD

Unclip : The handbrake sheaths on the bodyshell (at "b", "c").

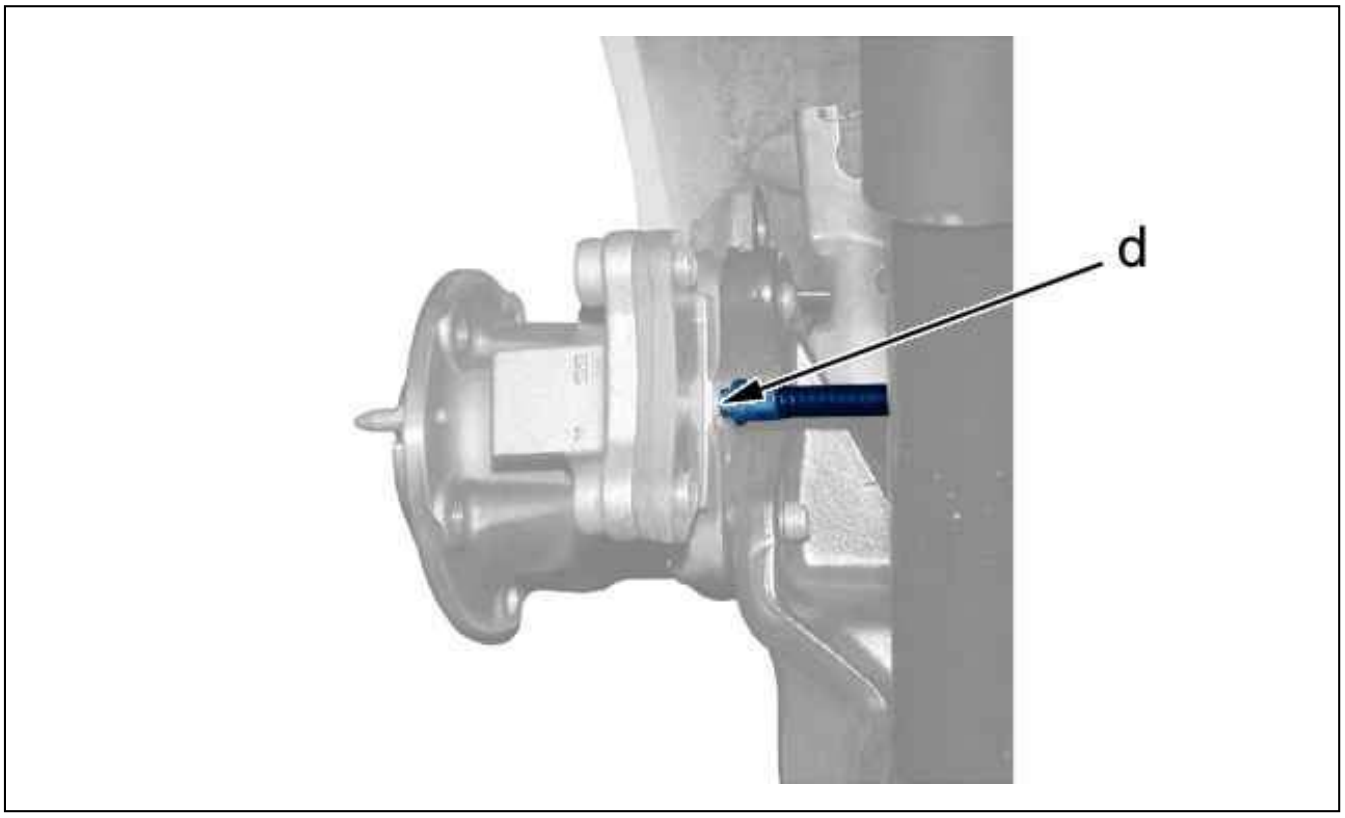

Figure : B3FP7JXD

Unclip then detach the cable sleeve (at "d").

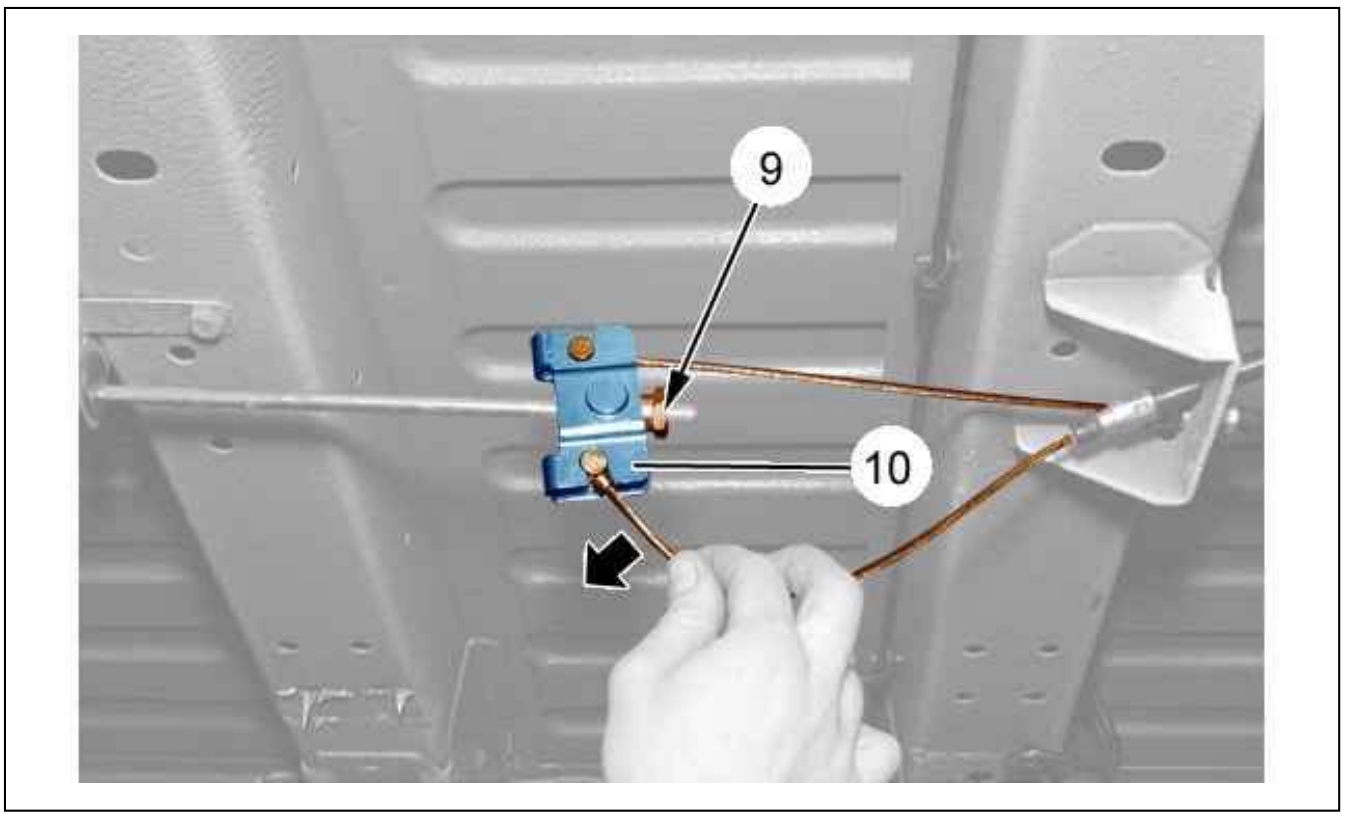

Figure : B3FP7JYD

Unscrew nut (9).
Uncouple the handbrake cables from the balance lever (10) (In the direction of the arrow).
Remove : The handbrake secondary cables.

3.2. Refitting

Couple the handbrake cables on the balance lever (10).
Tighten the nut (9).
Clip the sleeve on its bracket (at "d").
Clip : The handbrake sleeves to the body (at "b", "c").
Couple the sleeves to the supports on the suspension blades.
Refit the handbrake control lever (8) (on each side).
Connect the inner cable to the lever (8) (at "a") (on each side).

N.B. : Check that the brake cable is correctly positioned on the braking mechanism.

Refit :

- The parking brake shoes (on each side)
- The rear hub bearings
- The brake discs

Adjust the parking brake .
Refit the rear wheels.
Return the vehicle to its wheels.
Tighten the wheel bolts .

4. Common operations

CAUTION : Perform the operations to be carried out following reconnection of the battery.

Reconnect the battery.

REMOVING - REFITTING : REAR BRAKE PADS

ESSENTIAL : Observe the safety and cleanliness recommendations .

1. Tooling

Pliers FACOM D60A.

2. Removing

Untighten the rear wheel bolts.
Raise and support the vehicle, with the rear wheels hanging free.
Remove the rear wheels.

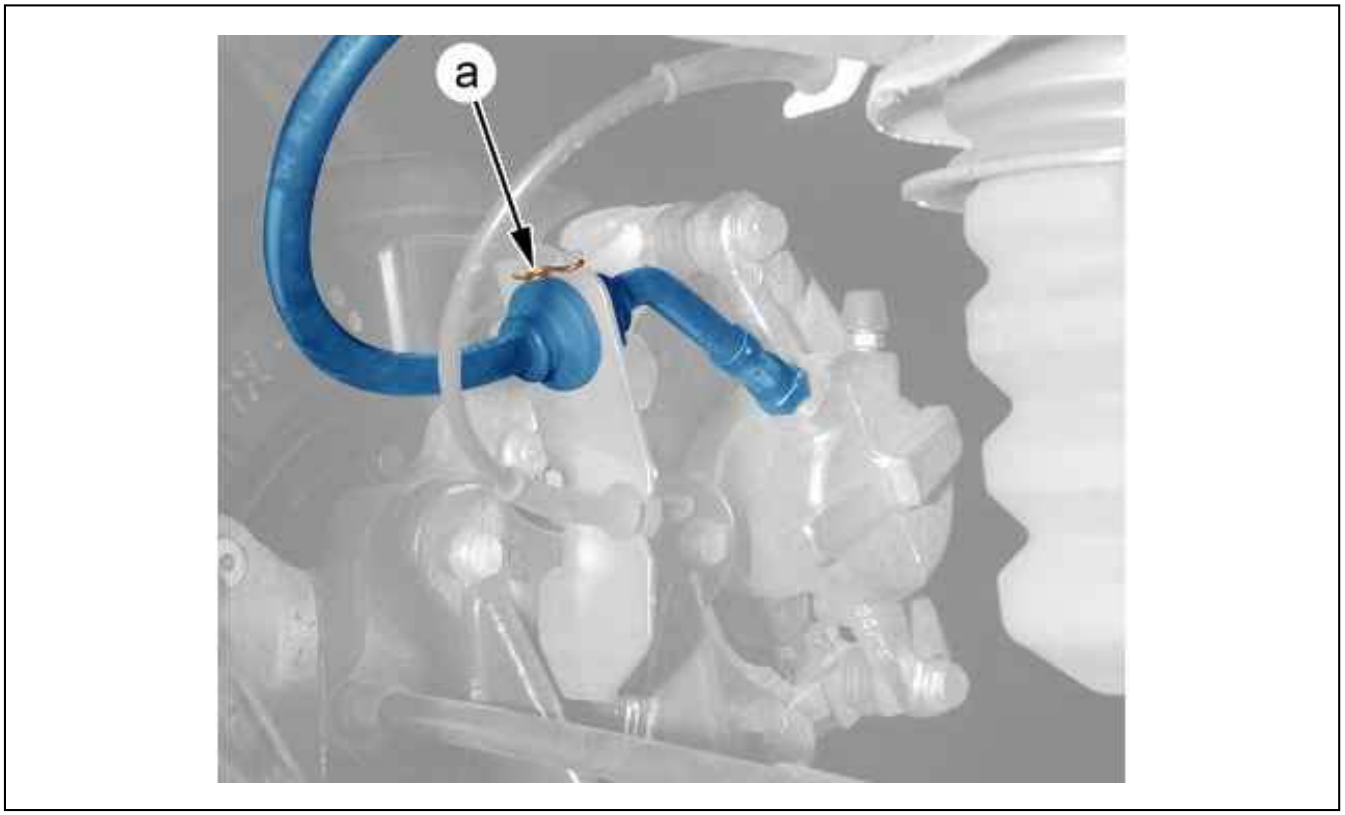

Figure : B3FP7JZD

Unclip the brake hose (at "a").
Move aside the brake hose from its support.

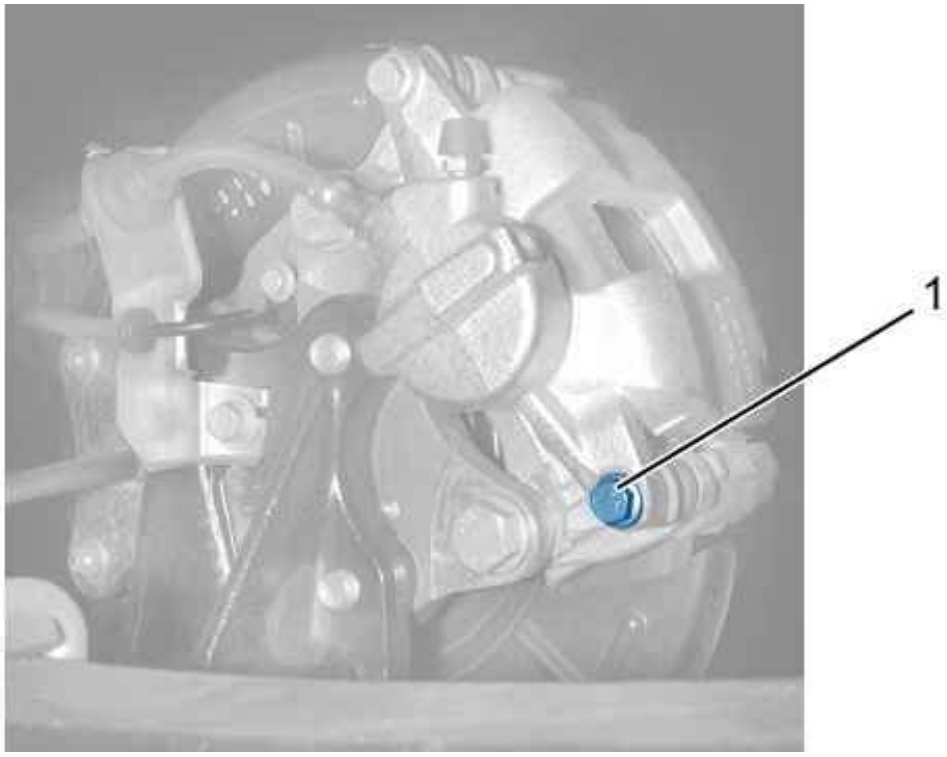

Figure : B3FP7K0D

Remove the bolt (1).

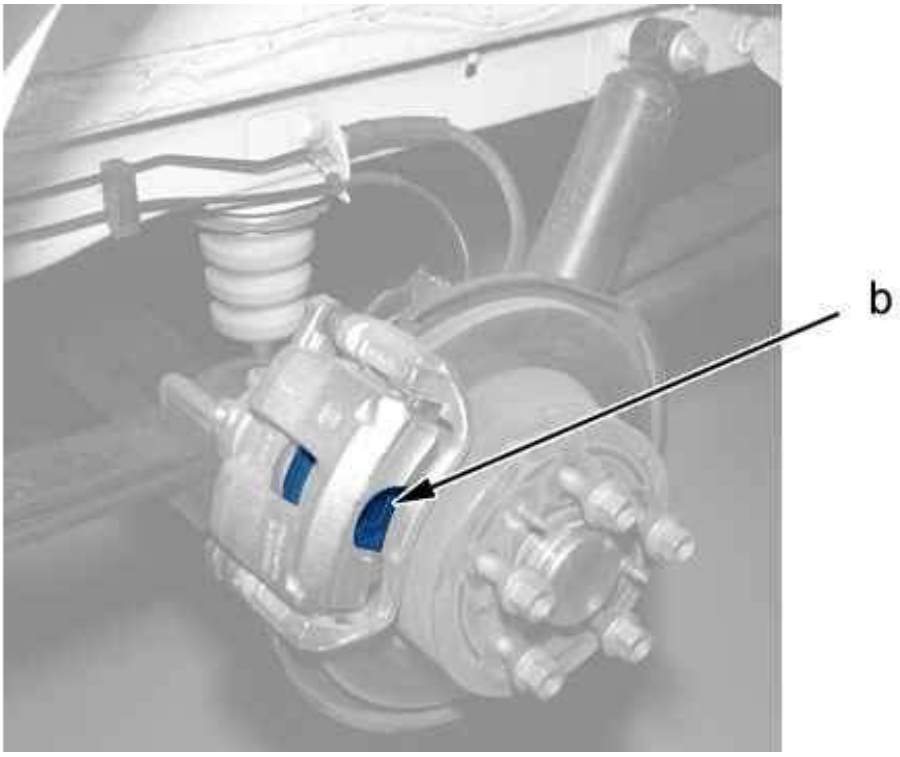

Figure : B3FP7K1D

Push the piston back (levering at b).

CAUTION : Check the brake fluid level.

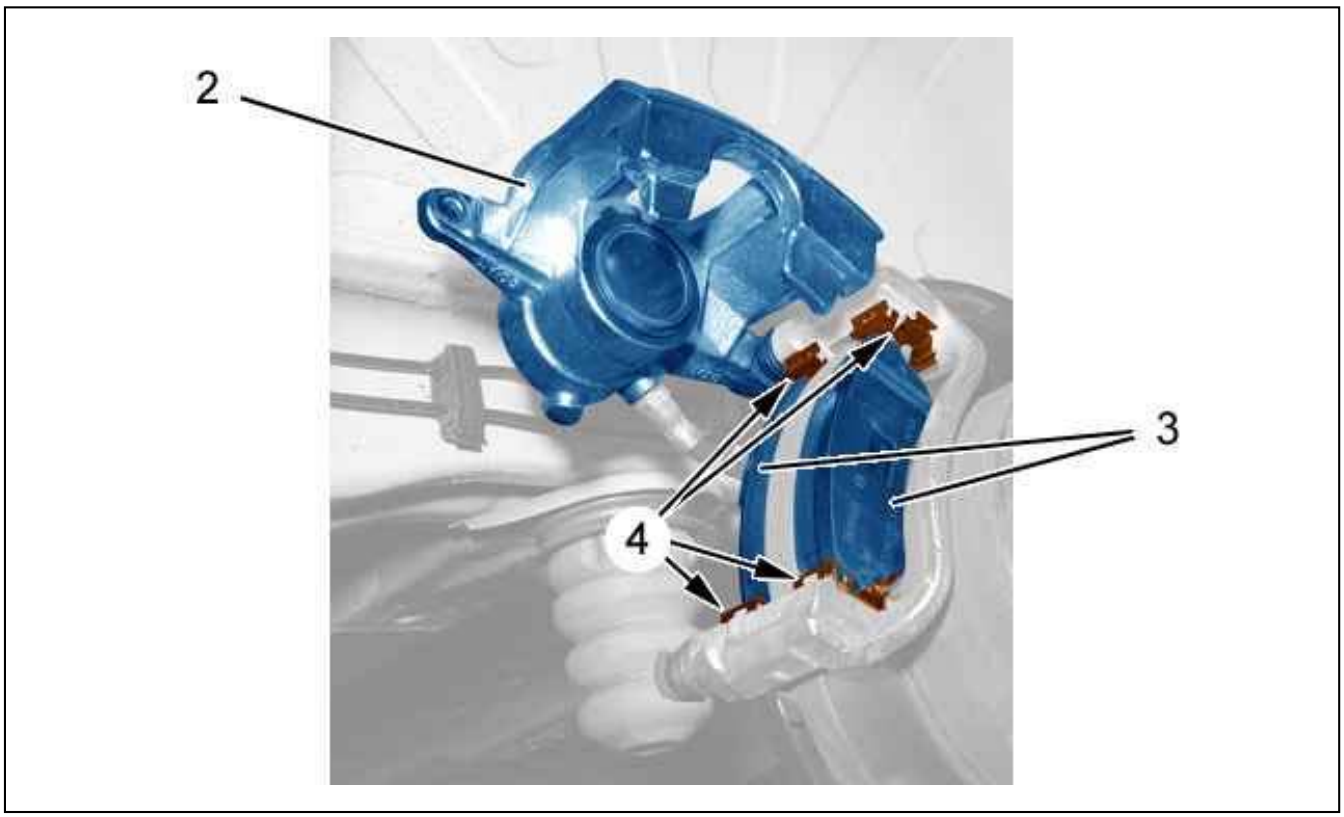

Figure : B3FP7K2D

Tilt the brake caliper (2).
Remove :

- The brake pads (3)
- The springs (4)

Push the pistons back ; Using FACOM D60A pliers.

CAUTION : Check the brake fluid level.

3. Cleaning

ESSENTIAL : Do not use compressed air to clean the brakes.

3.1. 1st possibility

Clean the brake disc and caliper (2) ; With a recommended brake cleaning product.
Allow to dry and to drain.
Wipe ; Using a paper cloth.

3.2. 2nd possibility

Use an approved dedusting instrument (see tools and equipment catalogue).
Visually check :

- Around the pistons for leak
- That the protective gaiters are in good condition and correctly adjusted
- The disc for wear

Ensure that the caliper slides correctly.

4. Refitting

CAUTION : Adhere to the tightening torques .

Refit :

- The springs (4)
- The brake pads (3)

Fold back the brake caliper (2).
Refit bolt (1) (new) (Pre-coated with a thread-locking product).
Tighten the bolt (1).
Position the brake hose on its support.
Apply the brakes, with the engine running, several times before driving the vehicle.
Check the operation of the brakes.
Check the brake fluid level and top up if necessary.
Fit the wheels.
Return the vehicle to its wheels.
Tighten the wheel bolts .

REMOVING - REFITTING : REAR BRAKE CALIPER

ESSENTIAL : Observe the safety and cleanliness recommendations .

1. Removing

Untighten the rear wheel bolts.
Raise and support the vehicle, with the rear wheels hanging free.
Remove the rear wheels.

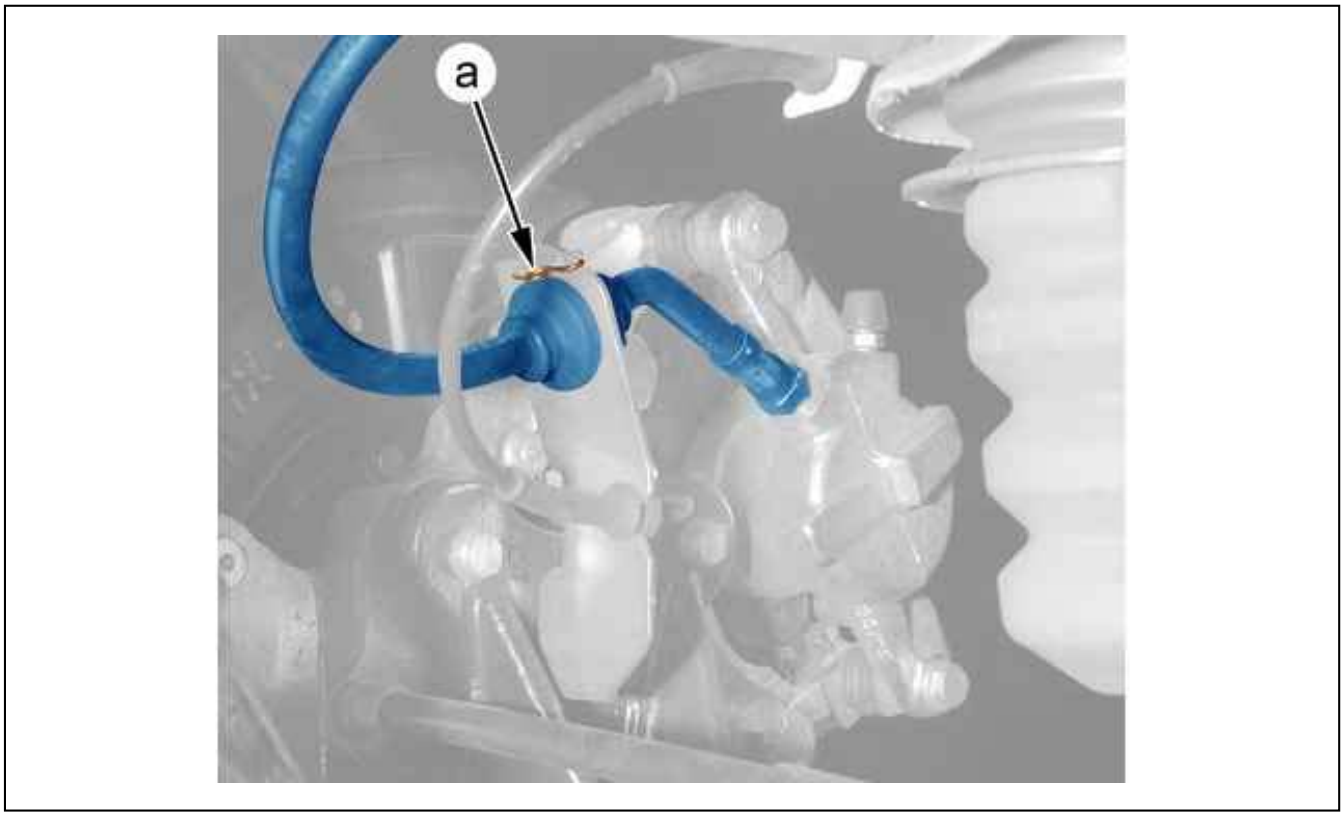

Figure : B3FP7JZD

Unclip the brake hose (at "a").
Move aside the brake hose from its support.

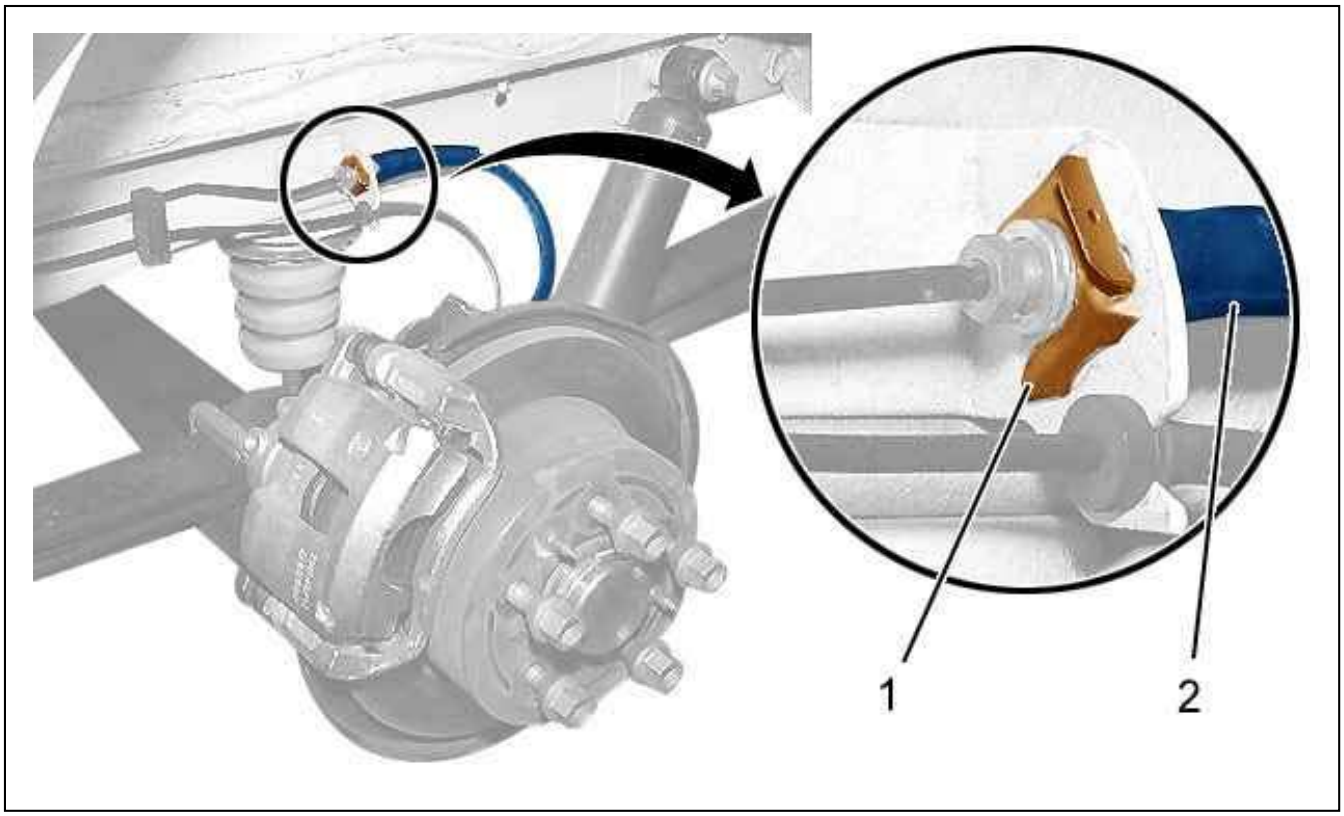

Figure : B3FG245D

Remove the clip (1).
Uncouple the flexible union (2) from the rigid brake piping.
Plug this pipe.

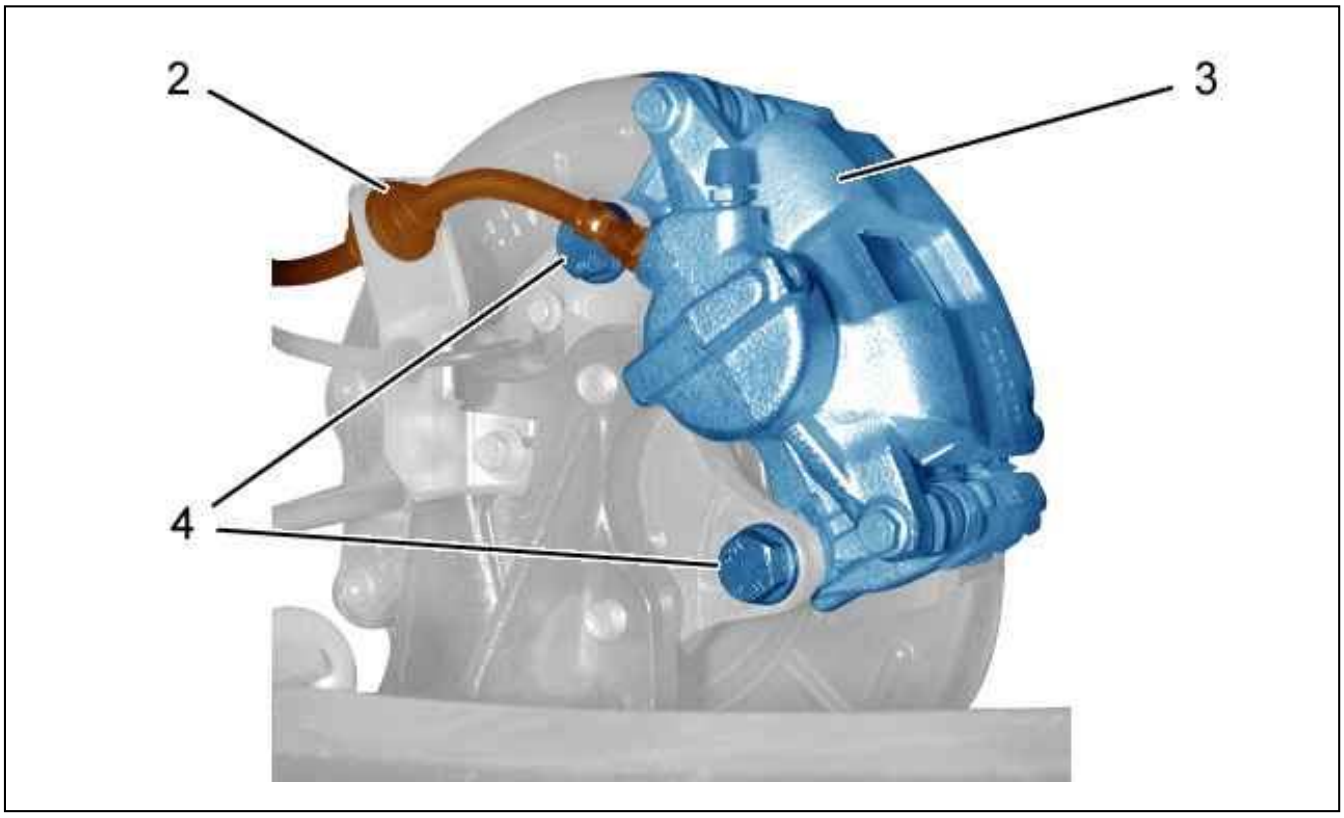

Figure : B3FG246D

Disconnect the hose union (2) from the brake caliper (3).
Close : The brake caliper (3).
Remove :

- The rear brake pads (see the relevant operation)
- The bolts (4)
- The rear brake caliper (3)

2. Cleaning

ESSENTIAL : Do not use compressed air to clean the brakes.

2.1. 1st possibility

Clean the brake disc and the brake caliper (3) ; With a recommended brake cleaning product.
Allow to dry and to drain.
Wipe ; Using a paper cloth.

2.2. 2nd possibility

Use an approved dedusting instrument (see tools and equipment catalogue).
Visually check :

- Around the pistons for leak
- That the protective gaiters are in good condition and correctly adjusted
- The disc for wear

Check the operation of the brake caliper (3).

3. Refitting

CAUTION : Adhere to the tightening torques .

Refit :

- The rear brake caliper (3)
- The bolts (4) (new) (pre-coated with a thread locking product)

Tighten the bolts (4).
Fit the brake pads (see the relevant operation).
Couple the flexible hose (2) on the brake caliper (3).
Position the hose union (2) on its support.
Couple the flexible union (2) to the rigid brake piping.
Refit the clip (1).
Bleed the brake system (see the relevant operation).
Apply the brakes, with the engine running, several times before driving the vehicle.
Check the operation of the brakes.
Fit the wheels.
Return the vehicle to its wheels.
Tighten the wheel bolts .

REMOVING - REFITTING : REAR WHEEL SENSOR

ESSENTIAL : Observe the safety and cleanliness recommendations .

1. Removing

Untighten the rear wheel bolts.
Raise and support the vehicle, with the rear wheels hanging free.

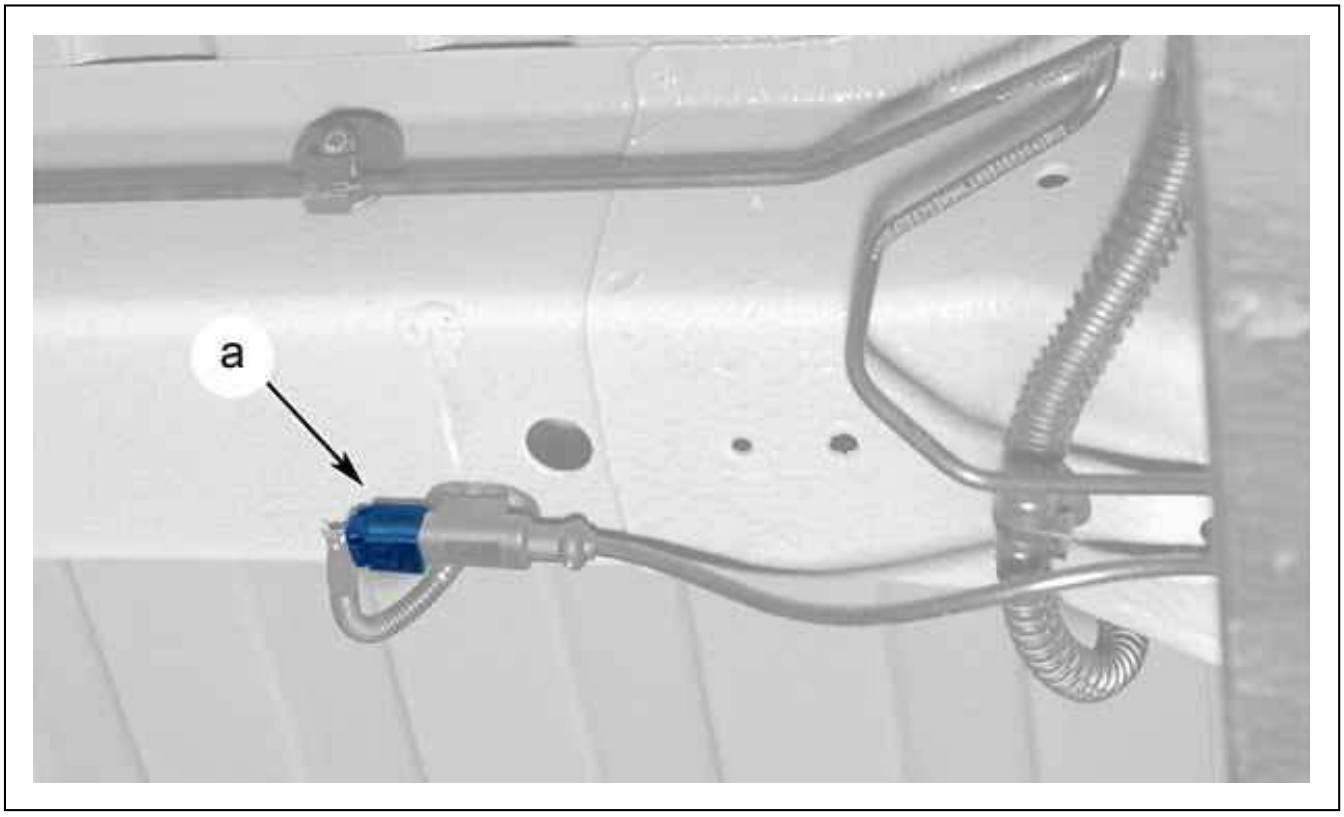

Figure : B3DP0DED

Disconnect the connector (at "a").
Unclip the electrical harness .

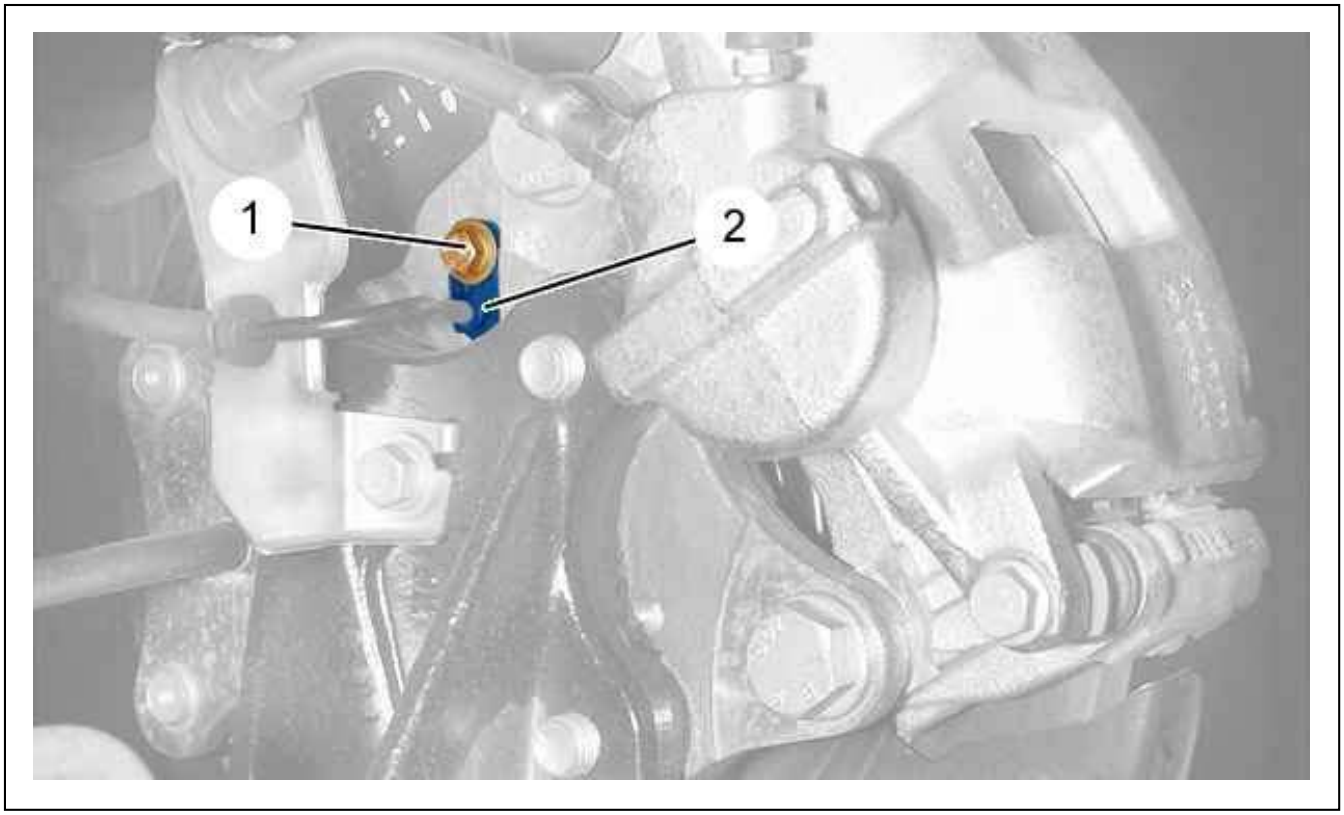

Figure : B3FG240D

Remove :

- The (1) bolt
- The sensor (2)

2. Refitting

CAUTION : Adhere to the tightening torques .

Fit the sensor (2).
Tighten the bolt (1).
Clip the harness.
Reconnect the connector (en "a").
Return the vehicle to its wheels.
Road test.
Read the fault codes.

REMOVING - REFITTING : FRONT WHEEL SENSOR

ESSENTIAL : Observe the safety and cleanliness recommendations .

1. Removing

Release the front wheel bolts.
Lift and support the front of the vehicle.
Remove the front wheels.

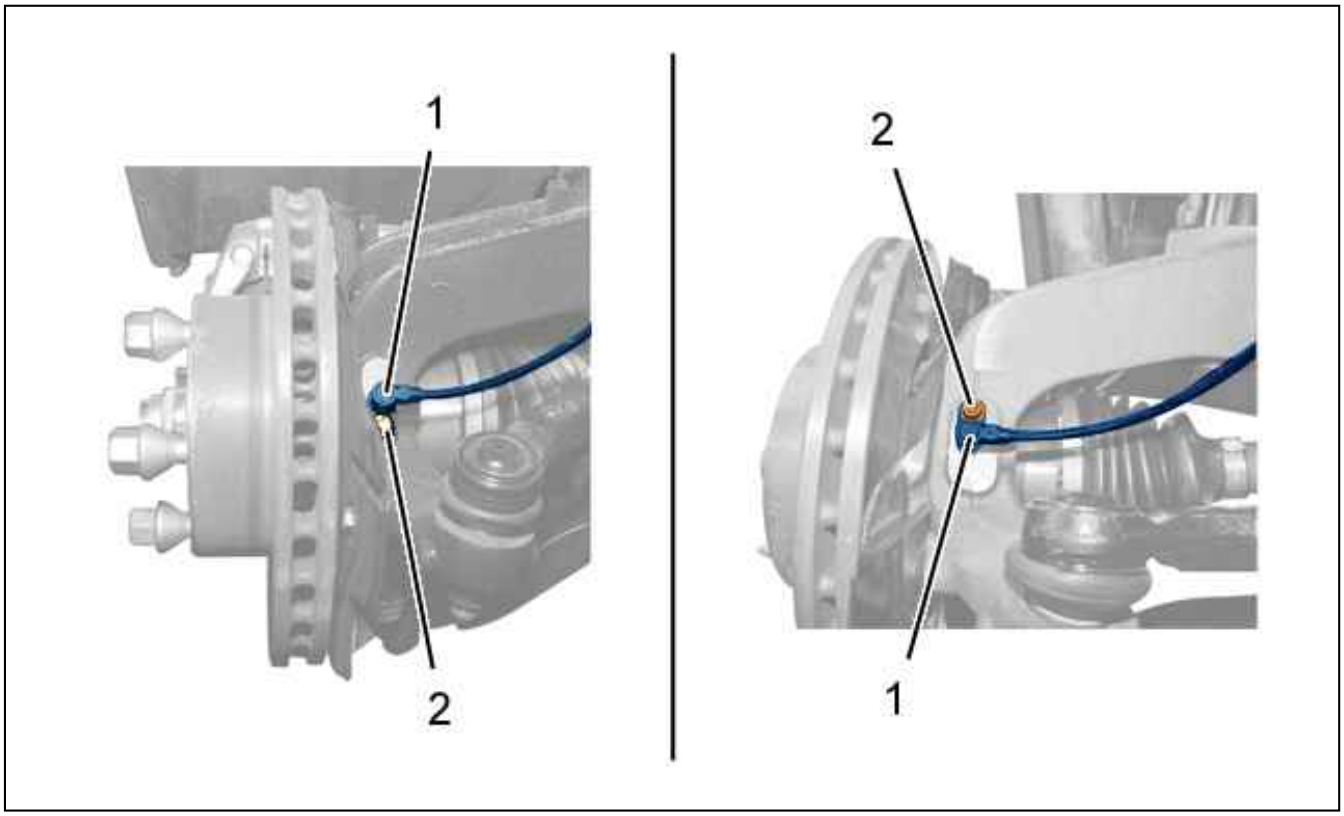

Figure : B3FG241D

Remove :

- The front splash shield
- The bolt (2) (according to assembly)
- The sensor (1) (according to assembly)

Unclip the harness .
Disconnect the wheel sensor connector.

2. Refitting

CAUTION : Adhere to the tightening torques .

Refit :

- The sensor (1)
- The bolt (2)

- The front splash shield

Clip the harness.
Reconnect the wheel sensor connector .
Fit the wheels.
Return the vehicle to its wheels.
Tighten the wheel bolts .
Road test.
Read the fault codes.

REMOVING - REFITTING : REAR BRAKE DISC

ESSENTIAL : Observe the safety and cleanliness recommendations .

ESSENTIAL : Always replace the brake pads if replacing the discs.

1. Removing

Untighten the rear wheel bolts.
Slacken the parking brake .
Raise and support the vehicle, with the rear wheels hanging free.
Remove the rear wheels.

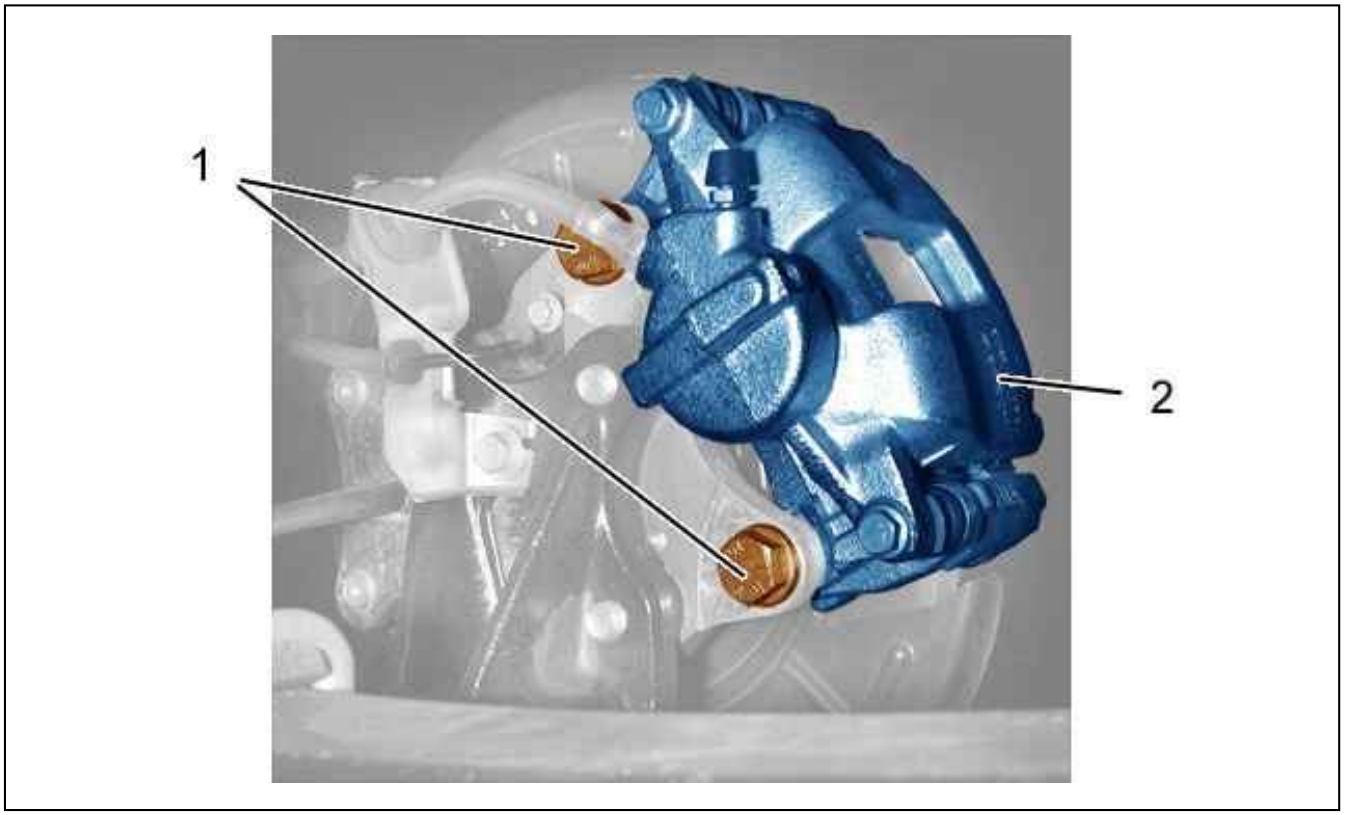

Figure : B3FP7K6D

Remove :

- The rear brake pads (see the relevant operation)
- The bolts (1)
- The rear brake caliper (2)

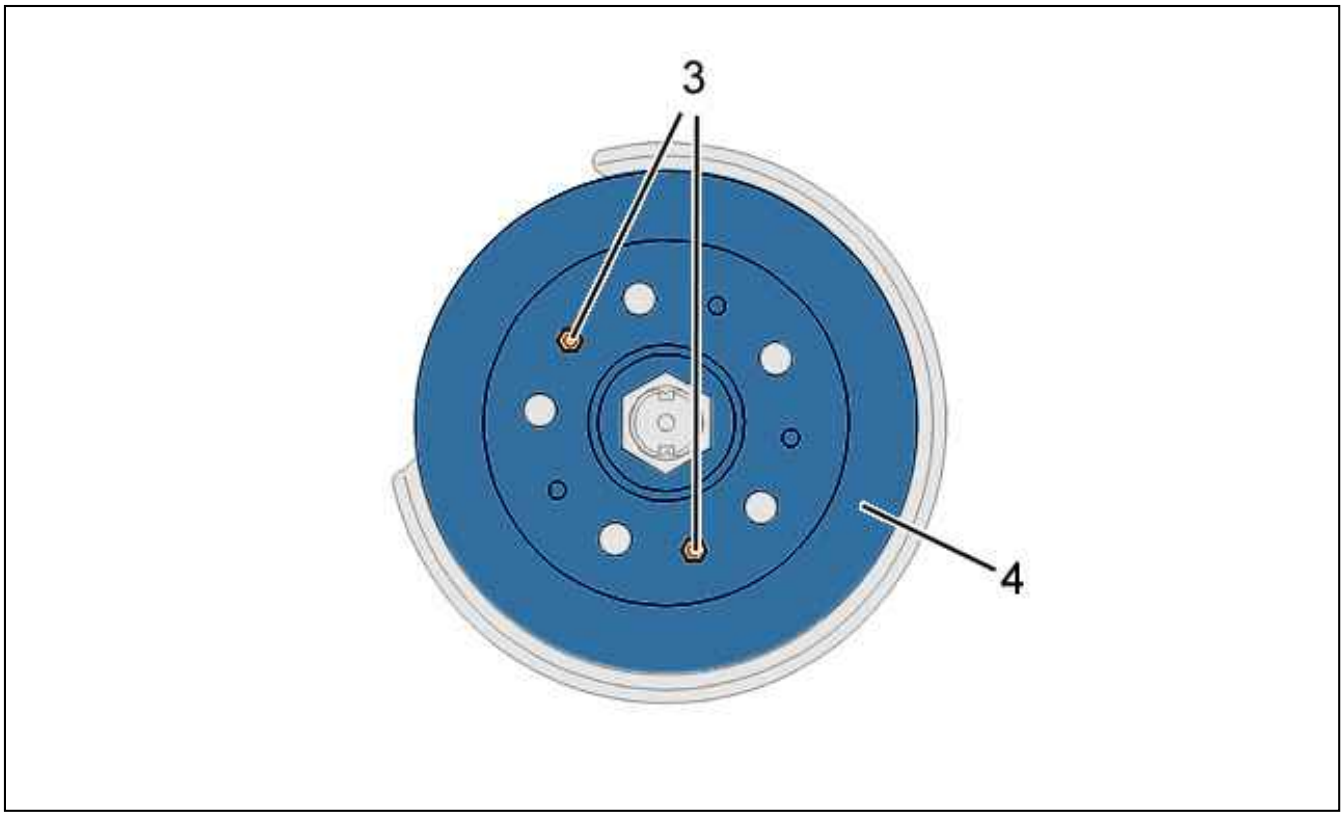

Figure : B3FG244D

Remove :

- The bolts (3)
- The rear brake disc (4)

2. Cleaning

ESSENTIAL : Do not use compressed air to clean the brakes.

2.1. 1st possibility

Clean the rear brake disc (4) and the rear brake caliper (2) ; With a recommended brake cleaning product.
Allow to dry and to drain.
Wipe with a paper towel.

2.2. 2nd possibility

Use an approved dedusting instrument (see tools and equipment catalogue).

3. Refitting

CAUTION : Adhere to the tightening torques .

Clean the rear brake disc (4)/hub contact surfaces thoroughly.
Refit :

- The rear brake disc (4)
- The bolts (3)

Tighten the bolts (3).

Refit :

- The rear brake caliper (2)
- The bolts (1) (new) (pre-coated with a thread locking product)

Tighten the bolts (1).
Refit : The rear brake pads (see the relevant operation).
Apply the brakes, with the engine running, several times before driving the vehicle.
Check the operation of the brakes.
Refit the rear wheels.
Return the vehicle to its wheels.
Tighten the wheel bolts .

REMOVING - REFITTING : FRONT BRAKE CALIPER

ESSENTIAL : Observe the safety and cleanliness recommendations .

1. Removing

Untighten the wheel screws (front).
Lift and support the vehicle with front wheels suspended.
Remove :

- The front wheels
- The brake pads (see the relevant operation)

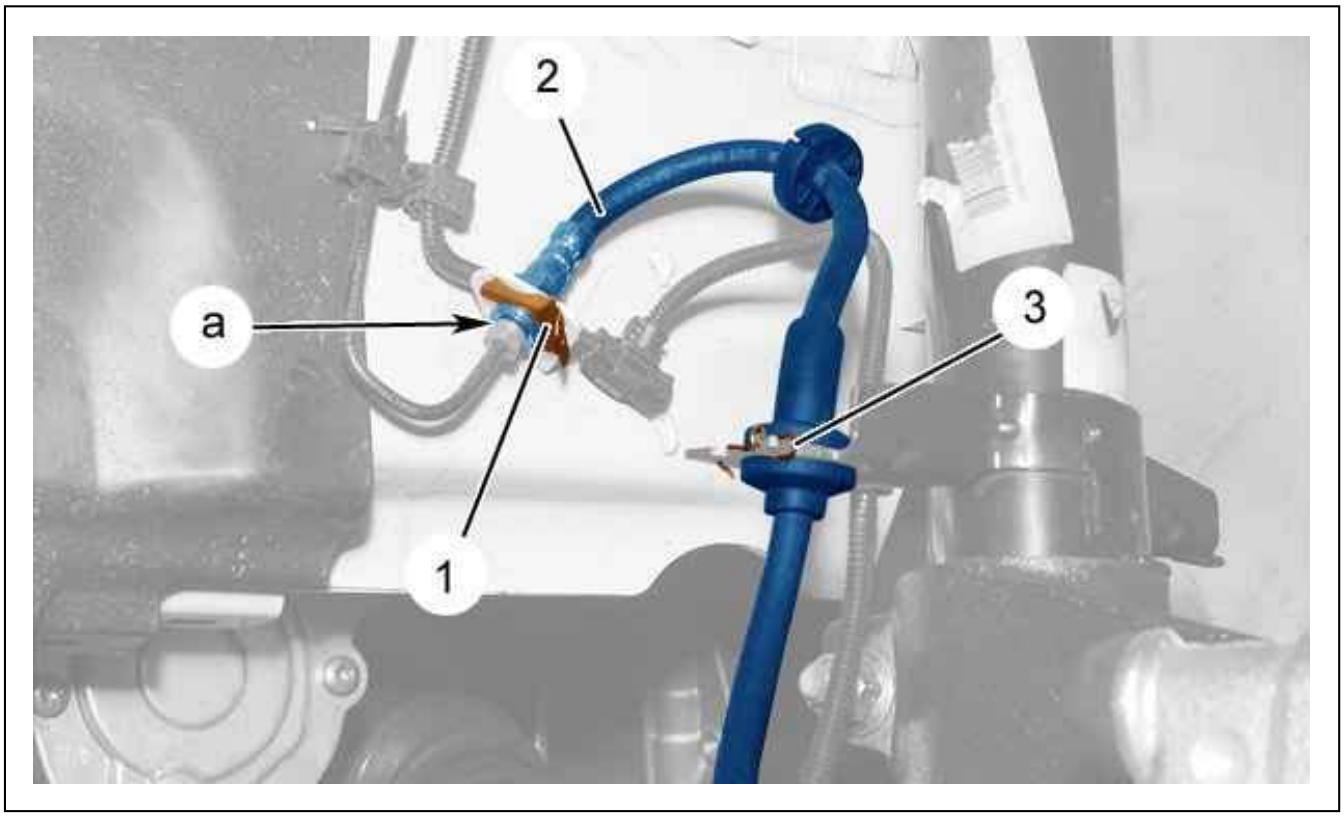

Figure : B3FP7K8D

Remove the clip (1).
Disconnect the hose union (2) (at "a").
Plug the front brake rigid pipe.
Remove the clip (3).
Move aside the hose union (2) from its support.

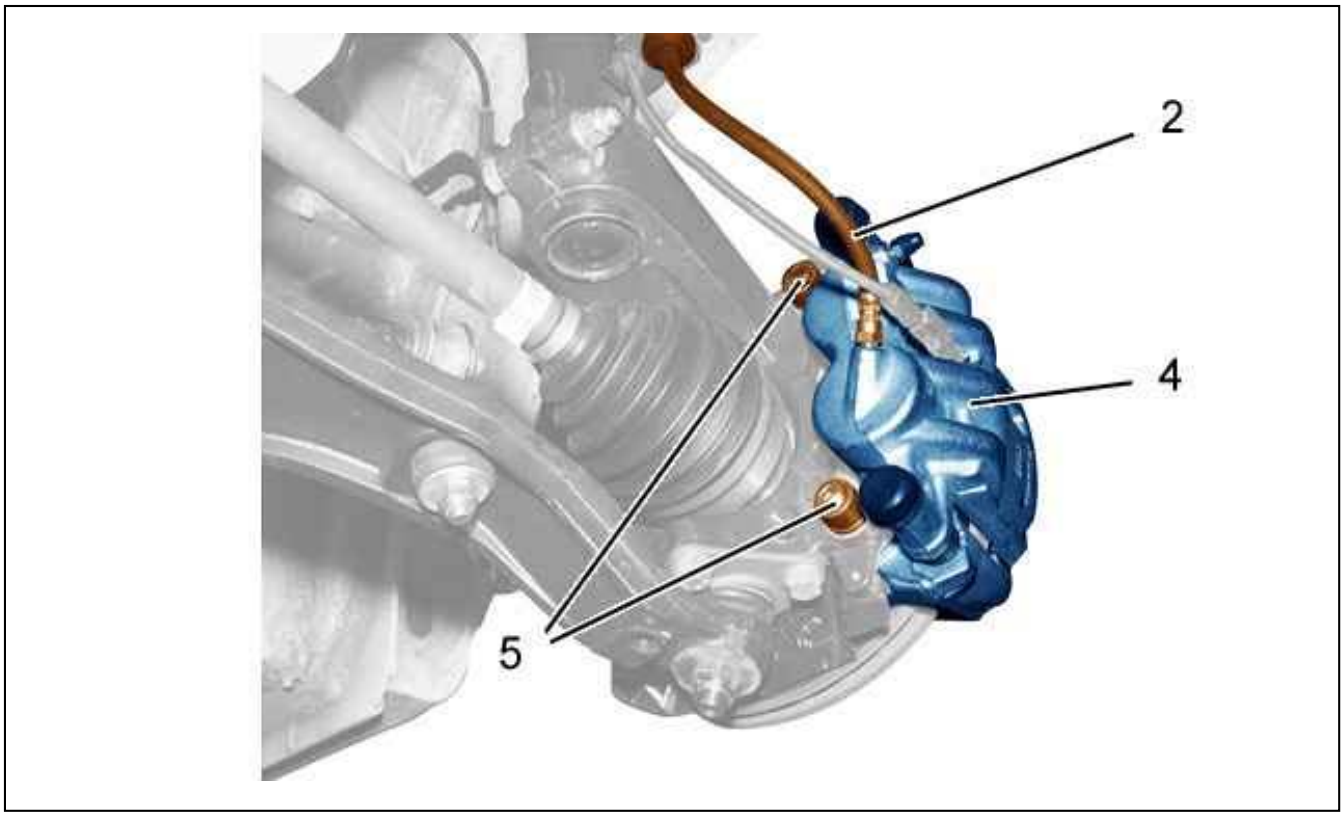

Figure : B3FP7K9D

Disconnect the hose union (2) from the brake caliper (4).
Remove and plug the hose union (2).
Blank the brake caliper (4).
Remove :

- The bolts (5)
- The brake caliper (4)

2. Cleaning

ESSENTIAL : Do not use compressed air to clean the brakes.

2.1. 1st possibility

Clean the brake disc and caliper (4) ; With a recommended brake cleaning product.
Allow to dry and to drain.
Wipe with a paper towel.

2.2. 2nd possibility

Use an approved dedusting instrument (see tools and equipment catalogue).
Visually check :

- Around the pistons for leak
- That the protective gaiters are in good condition and correctly adjusted
- The disc for wear

Check the operation of the brake caliper (4).

3. Refitting

CAUTION : Adhere to the tightening torques .

Refit :

- The brake caliper (4)
- The bolts (5) (new) (pre-coated with a thread locking product)

Tighten the bolts (5).
Couple the flexible union (2) to the brake caliper (4).
Position the hose union (2) on its support.
Couple the flexible union (2) to the rigid brake piping (front).
Refit :

- The clip (1)
- The clip (3)
- The brake pads (see the relevant operation)
- The front wheels

Bleed the brake system (see the relevant operation).
Return the vehicle to its wheels.
Tighten the wheel bolts .

REMOVING - REFITTING : ABS/ESP ECU

ESSENTIAL : Observe the safety and cleanliness recommendations .

1. Tooling

Equipment : Diagnostic station.

2. Removing

Disconnect the battery.
Remove the ABS/ESP hydraulic valve block .

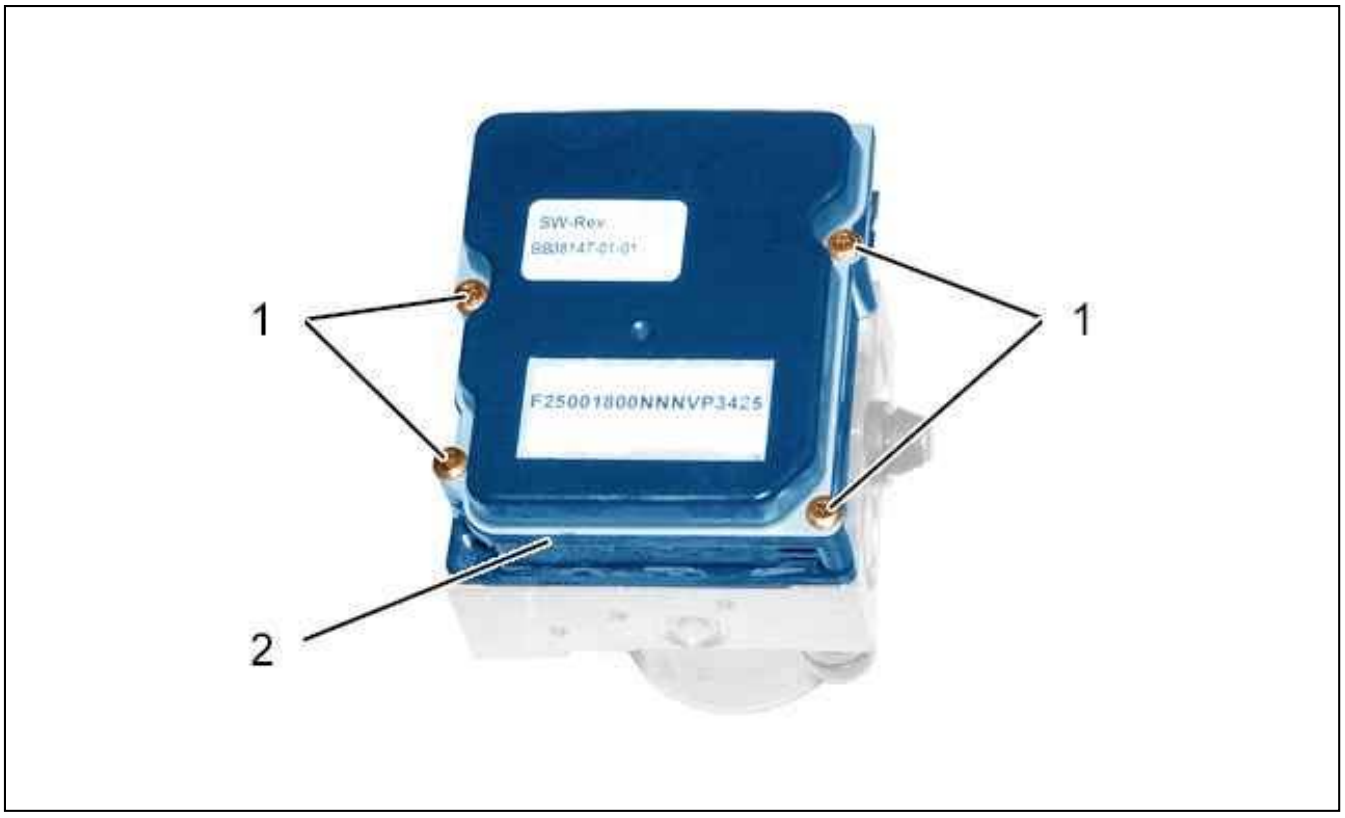

Figure : B3FP7N0D

Remove :

- The bolts (1)
- The ABS/ESP ECU (2)

3. Refitting

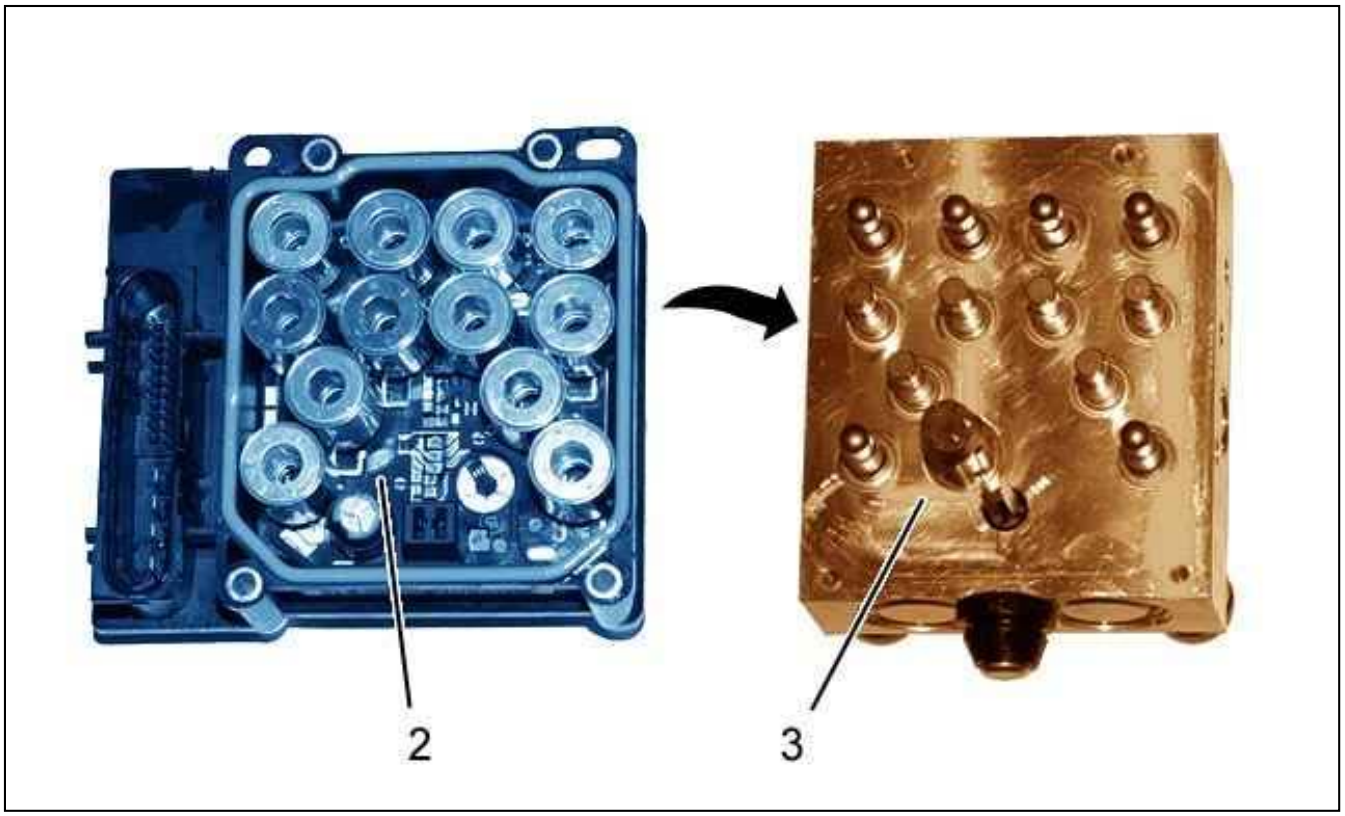

Figure : B3FP7N1D

Refit :

- The ABS/ESP ECU (2) (on the hydraulic valve block (3))
- The bolts (1)

Pre-tighten to 1,75 ± 0,25 N.m.
Tighten to 3 ± 0,3 N.m.
Refit : The ABS/ESP hydraulic block .

CAUTION : Perform the operations to be carried out following reconnection of the battery.

Reconnect the battery.
Bleed the brake system .

3.1. ESP ECU

Connect the diagnostic tool to the vehicle’s diagnostic socket.
Carry out an global test.
Start communication by ECU.
To calibrate the steering wheel angle sensor, go to the replacement parts menu, longitudinal acceleration sensor, calibration of the longitudinal acceleration sensor.
To calibrate the longitudinal acceleration sensor, go to the replacement parts menu, switch module at the steering whee calibration of the steering wheel angle sensor (CAV).

3.2. Refitting (continued)

Carry out :

- Perform a road test
- Reading of the fault codes

REMOVING - REFITTING : HYDRAULIC VALVE BLOCK (ABS/ESP)

ESSENTIAL : Observe the safety and cleanliness recommendations .

1. Tooling

Pedal press.
Diagnostic tool.

2. Removing

Disconnect the battery.
Position the pedal press on the brake pedal in order to stem the flow of brake fluid when disconnecting the brake lines.
Remove :

- The front LH headlamp
- The rubber protection (according to equipment)

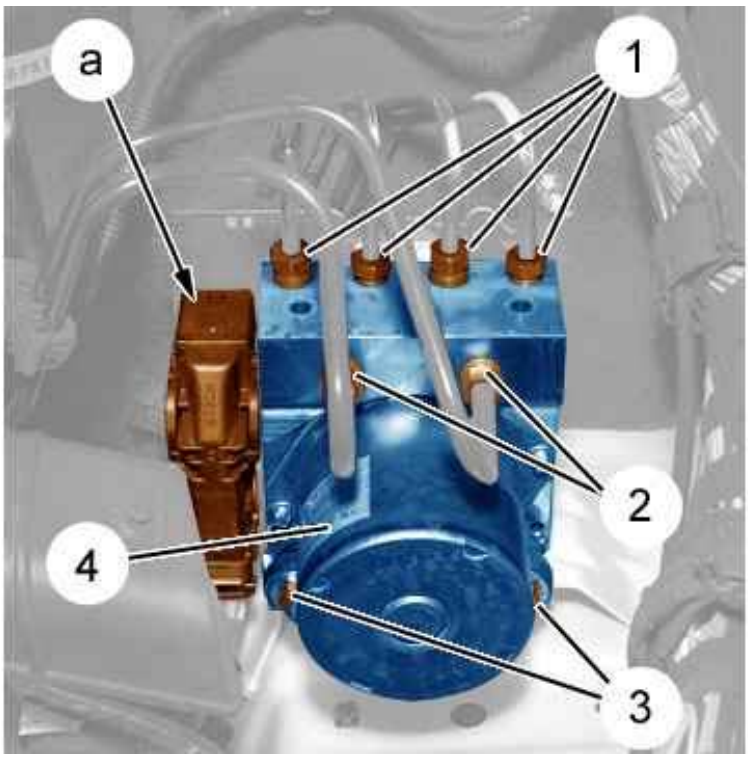

Figure : B3FG1YLD

Disconnect the connector (at "a").
Disconnect the connectors (1) and (2) (beware of escaping fluid).

N.B. : Do not apply force to the hydraulic pipes.

Unscrew the nuts (3).
Remove the hydraulic valve block (4).

CAUTION : Plug the inlets and outlets of the hydraulic valve block (4) to prevent any foreign bodies getting in.

3. Refitting

CAUTION : Remove the plugs from the apertures of the hydraulic valve block before fitting the brake pipes.

N.B. : The hydraulic valve block (4) is delivered full of brake fluid .

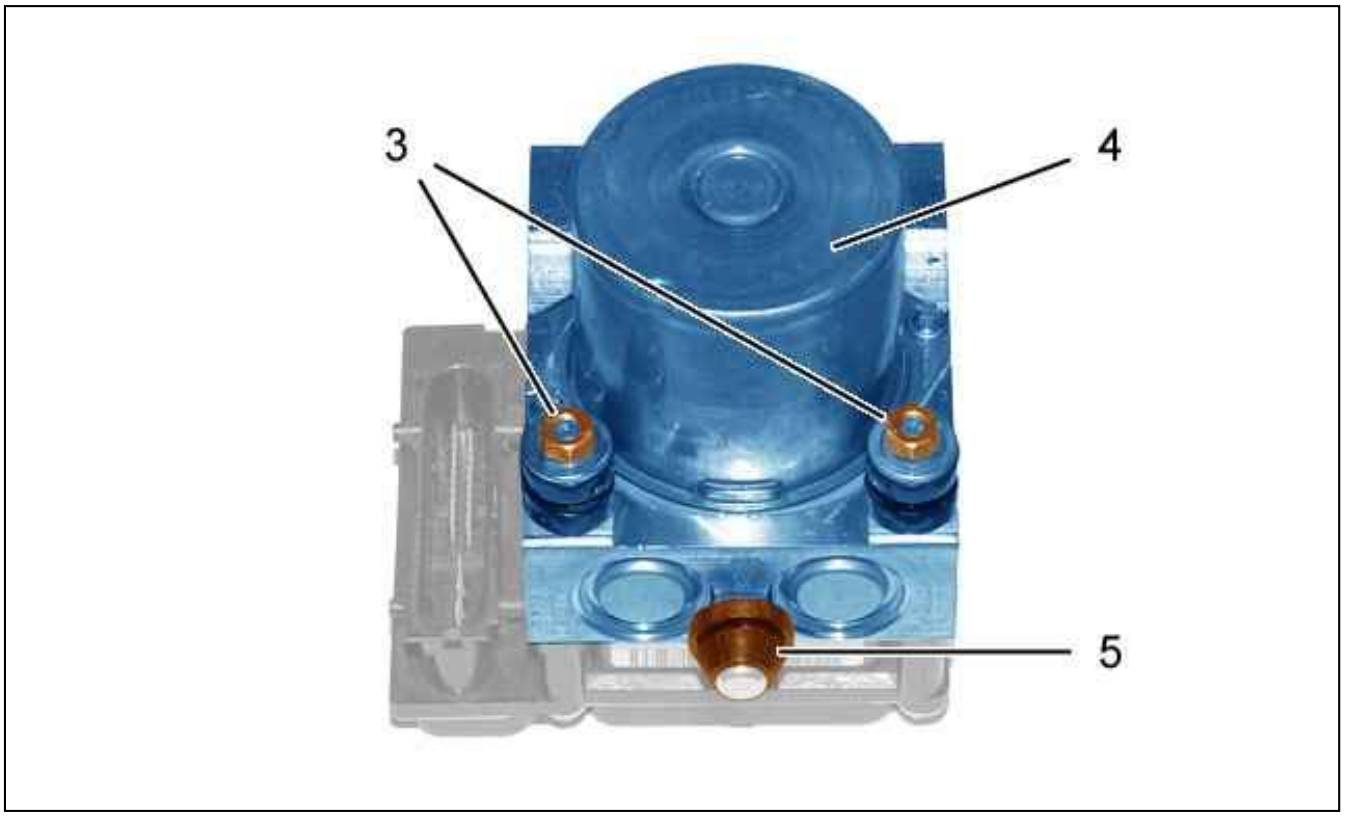

Figure : B3FP7MZD

Check that the rubber pad (5) is present (according to equipment).
Refit the hydraulic valve block (4) onto its support.
Engage the rubber pad (5) in its support (according to equipment).

CAUTION : Adhere to the tightening torques .

Tighten the nuts (3).
Recouple unions (2) and (1).
Connect the connector (at "a").
Refit :

- The rubber protection (according to equipment)
- The front LH headlamp

Remove the pedal push .

CAUTION : Perform the operations to be carried out following reconnection of the battery.

Reconnect the battery.
Bleed the brake system .

3.1. Vehicle with ESP

Connect the diagnostic tool to the vehicle’s diagnostic socket.
Carry out an global test.
Start communication by ECU.
To calibrate the steering wheel angle sensor, go to the replacement parts menu, longitudinal acceleration sensor, calibration of the longitudinal acceleration sensor.
To calibrate the longitudinal acceleration sensor, go to the replacement parts menu, switch module at the steering whee calibration of the steering wheel angle sensor (CAV).

3.2. Refitting (continued)

Carry out :

- Perform a road test
- Reading of the fault codes

REMOVING - REFITTING : STOP LAMP SWITCH

ESSENTIAL : Observe the safety and cleanliness recommendations .

CAUTION : According to vehicle, there may be two types of brake switch assembly : Either a brake switch assembly with manual adjustment, or a brake switch assembly with automatic adjustment.

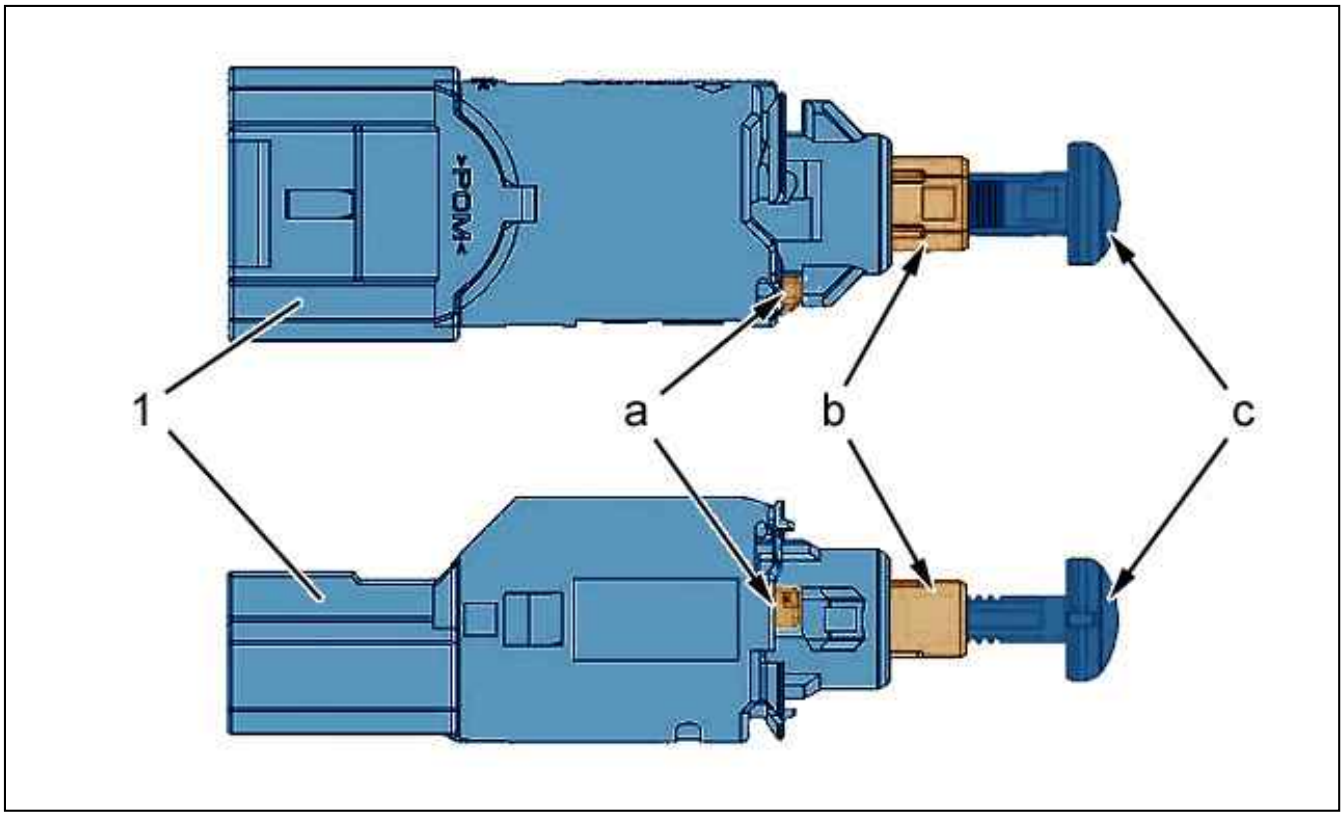

Figure : B3FG247D

(1) Stop lamp switch .
"a" Locking key.
"b" Push rod support .
"c" Thrust pad .

1. Stop lamp switch (With manual adjustment)

1.1. Removing

Disconnect the connector of the stop lamp switch (1).
Rotate the stop lamp switch (1) a quarter turn to the left to unlock it.
Take out the stop lamp switch (1).

1.2. Refitting

CAUTION : Make sure that the brake pedal is in the rest position and that it remains so throughout the operation.

Make sure that the locking latch "a" on the push rod support "b" is inside the extension of the stop lamp switch centring lug (1).

If this is so, the travel of the plunger support "b" within the brake light switch (1) is limited.
Present the stop lamp switch (1) to its support, with the thrust pad "c" against the brake pedal.
Press firmly on the brake light switch (1) in the centreline to set the piston "c" in the plunger support "b" until the base of the brake light switch (1) is in contact with its support.
Rotate the stop lamp switch (1) a good quarter turn to the right to lock it.
Reconnect the connector of the stop lamp switch (1).
Switch on the ignition.
Check that the brake lights come on.

1.3. Check the adjustment : Stop lamp switch (Brake pedal at rest)

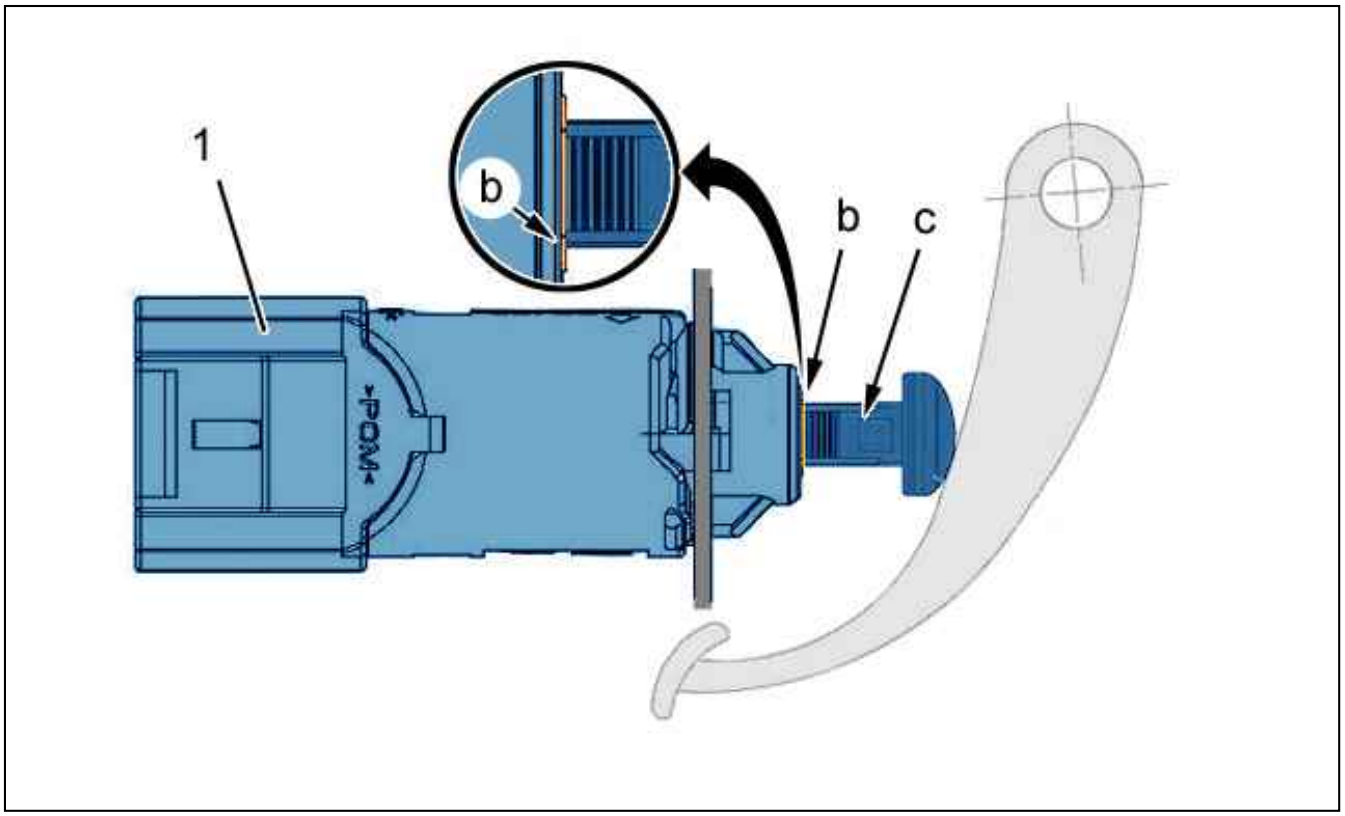

Figure : B3FG248D

Check the position of the plunger support "b" in the brake light switch (1).
The plunger support "b" should be flush with the body of the brake light switch (1) and the plunger "c" should be in contact with the brake pedal.

N.B. : The brake light switch (1) must not be used as a stop for the brake pedal.

1.4. Check the adjustment : Stop lamp switch (Brake pedal pressed down)

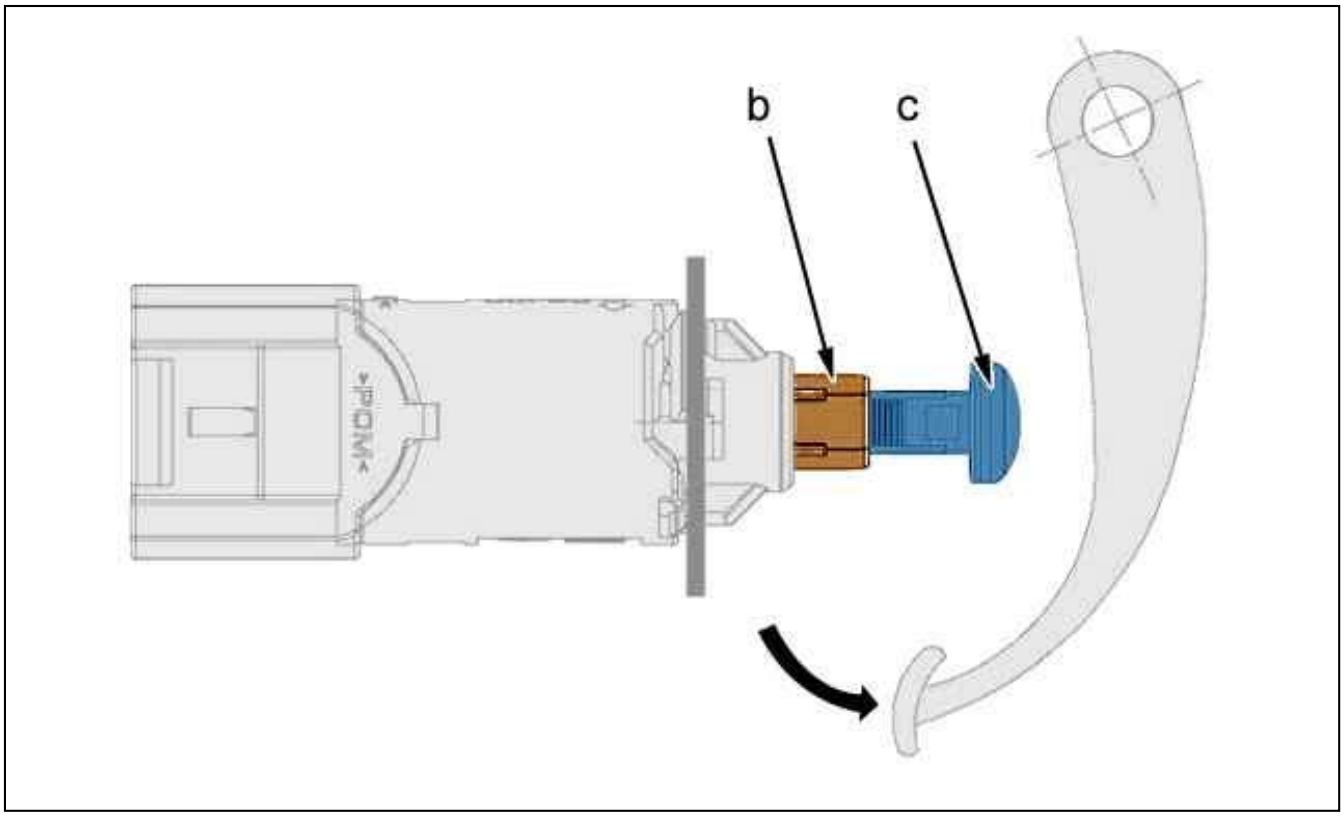

Figure : B3FG249D

The push rod support "b" is free and the push rod "c" is no longer is contact with the brake pedal .

2. Stop lamp switch (With automatic adjustment)

2.1. Removing

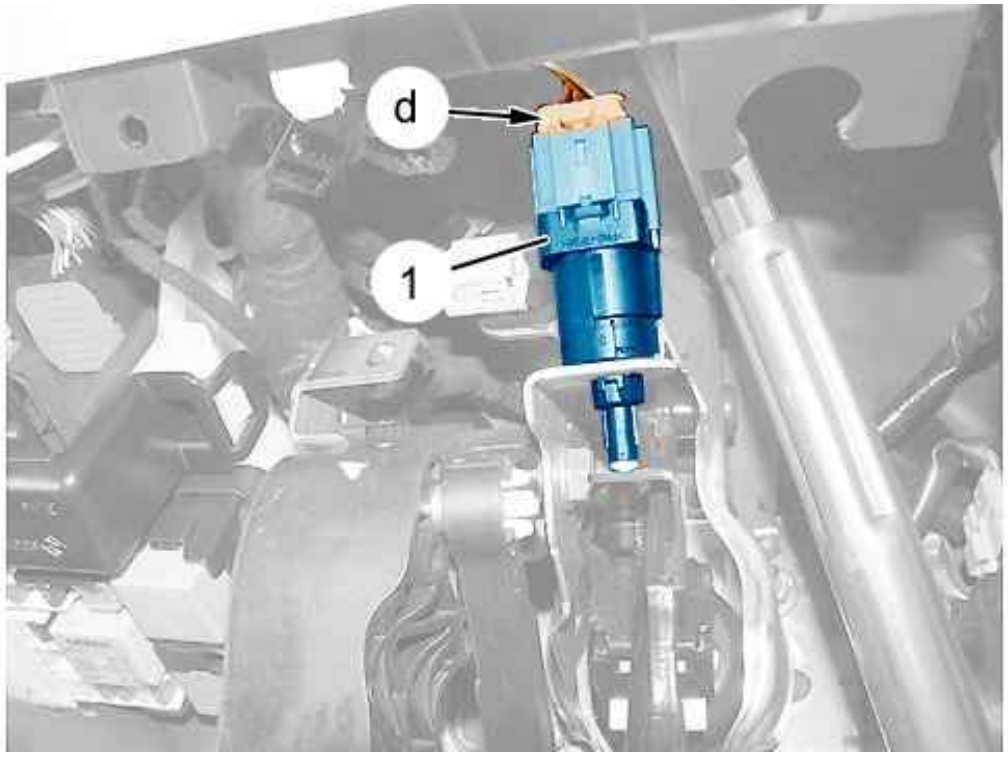

Figure : B3FG24AD

Disconnect the connector of the stop lamp switch (1) (at "d").
Rotate the stop lamp switch (1) a quarter turn anti-clockwise to unlock it.
Remove the stoplamp switch (1).

2.2. Refitting

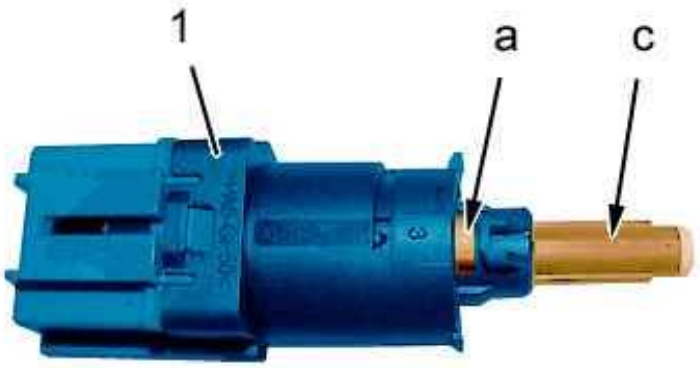

Figure : B3FG24BD

(1) Stop lamp switch .
"a" Locking key.
"c" Thrust pad .

CAUTION : Make sure that the brake pedal is in the rest position and that it remains so throughout the operation. Do not support the brake pedal while fitting the brake light switch (1), risk of incorrect setting.

Check that the locking key "a" is inside the extension of the stoplamp switch centring lug (1).
Present the stop lamp switch (1) to its support, with the thrust pad "c" against the brake pedal.
Turn the brake light switch (1) one quarter of a turn clockwise to the stop.

N.B. : Adjustment of the stoplamp switch (1) is automatic once it is locked.

Re-connect the connector (at "d").
Check that the brake lights come on.

REMOVING - REFITTING : PARKING BRAKE SHOES

1. Recommended tools

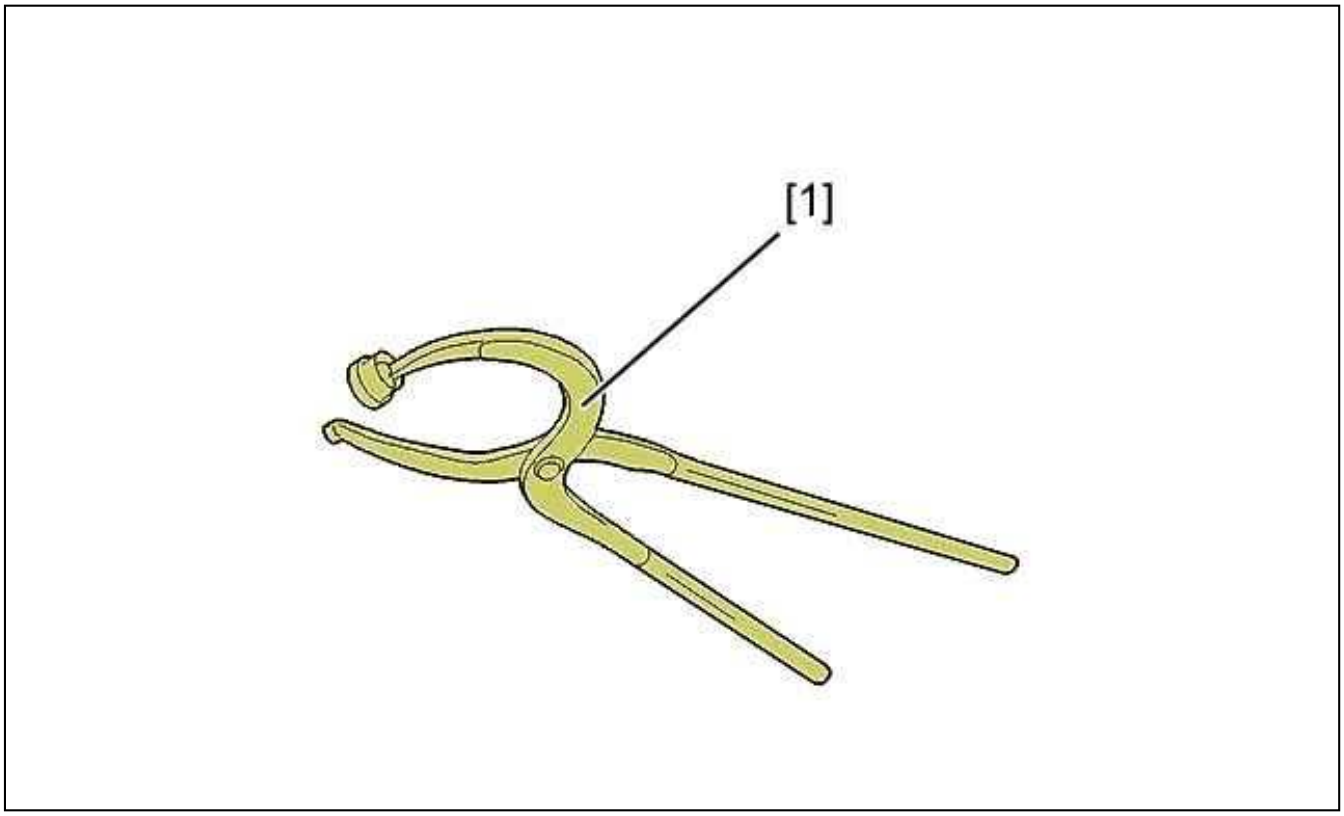

Figure : E5AP2XRD

[1] pliers for the removal and fitting of FACOM 196 TS 2110-T brake shoe springs.

2. Removing

Untighten the wheel screws (rear).
Slacken the parking brake .
Raise and support the vehicle, with the rear wheels hanging free.
Remove :

- The rear wheels
- The rear brake disc (see the relevant operation)
- The rear hub (see the relevant operation)

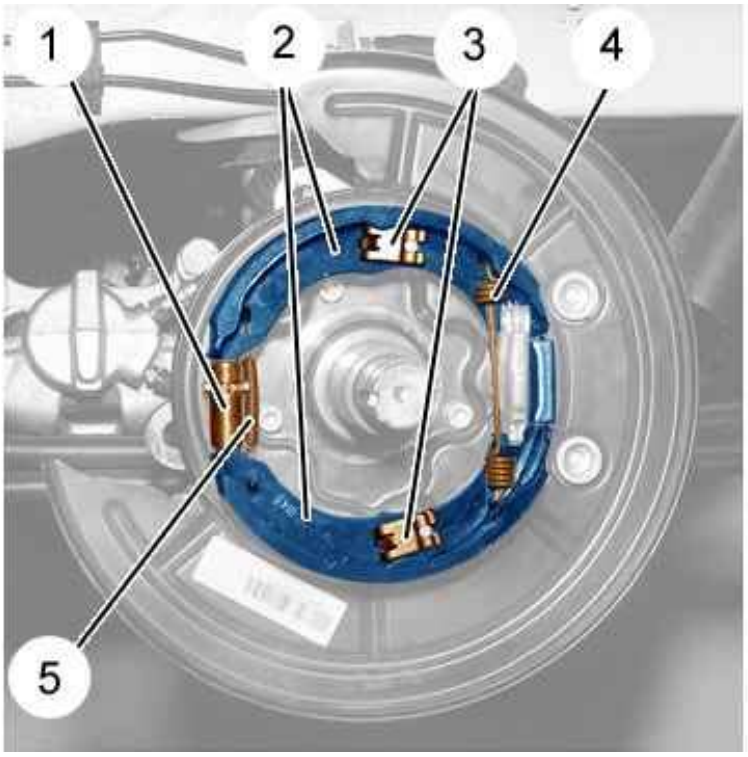

Figure : B3FP7KUD

Remove :

- The adjusting mechanism (1)
- The spring (5)
- The retaining clips (3)
- The brake pads (2)
- The spring (4) ; Using tool [1]

3. Cleaning

ESSENTIAL : Do not use compressed air to clean the brakes.

3.1. 1st possibility

Clean the brake disc and the brake caliper, using an approved brake cleaning product.
Allow to dry and to drain.
Wipe with a paper towel.

3.2. 2nd possibility

Use an approved dedusting instrument (refer to the Material and Equipment Catalogue).

4. Refitting

Refit :

- The brake pads (2)
- The retaining clips (3)
- The spring (4) ; Using tool [1]
- The spring (5)
- The adjusting mechanism (1)

Thoroughly clean the disc/hub bearings.
Refit :

- The rear hub (see the relevant operation)
- The rear brake disc (see the relevant operation)

Adjust the parking brake (see the relevant operation).
Apply the brakes, with the engine running, several times before driving the vehicle.
Check the operation of the brakes.
Refit the rear wheels.
Return the vehicle to its wheels.
Tighten the wheel bolts .

REMOVING - REFITTING : PEDAL BRACKET

ESSENTIAL : Observe the safety and cleanliness recommendations .

1. Tooling

Tool	Reference	Designation
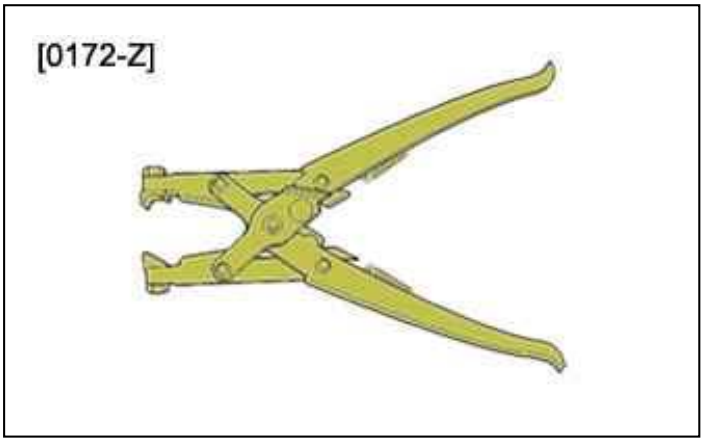 Figure : E5AB0PPT	[0172-Z]	pliers for elastic clips

2. Removing

Disconnect the ancillaries battery.
Remove :

- The fascia lower cover
- The built-in systems interface (if necessary)
- The stop lamp connector
- The steering column

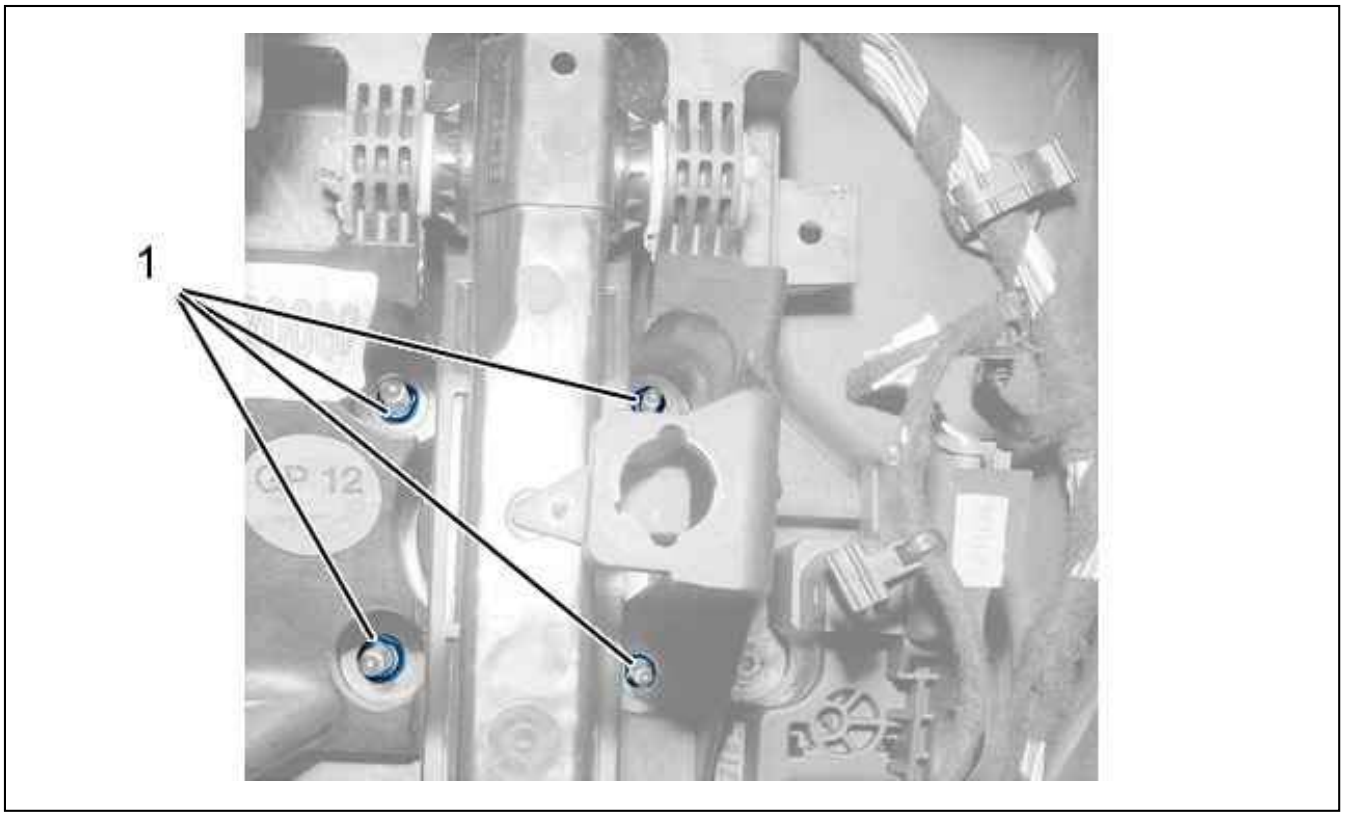

Figure : B3FP7MGD

Remove the nuts (1).

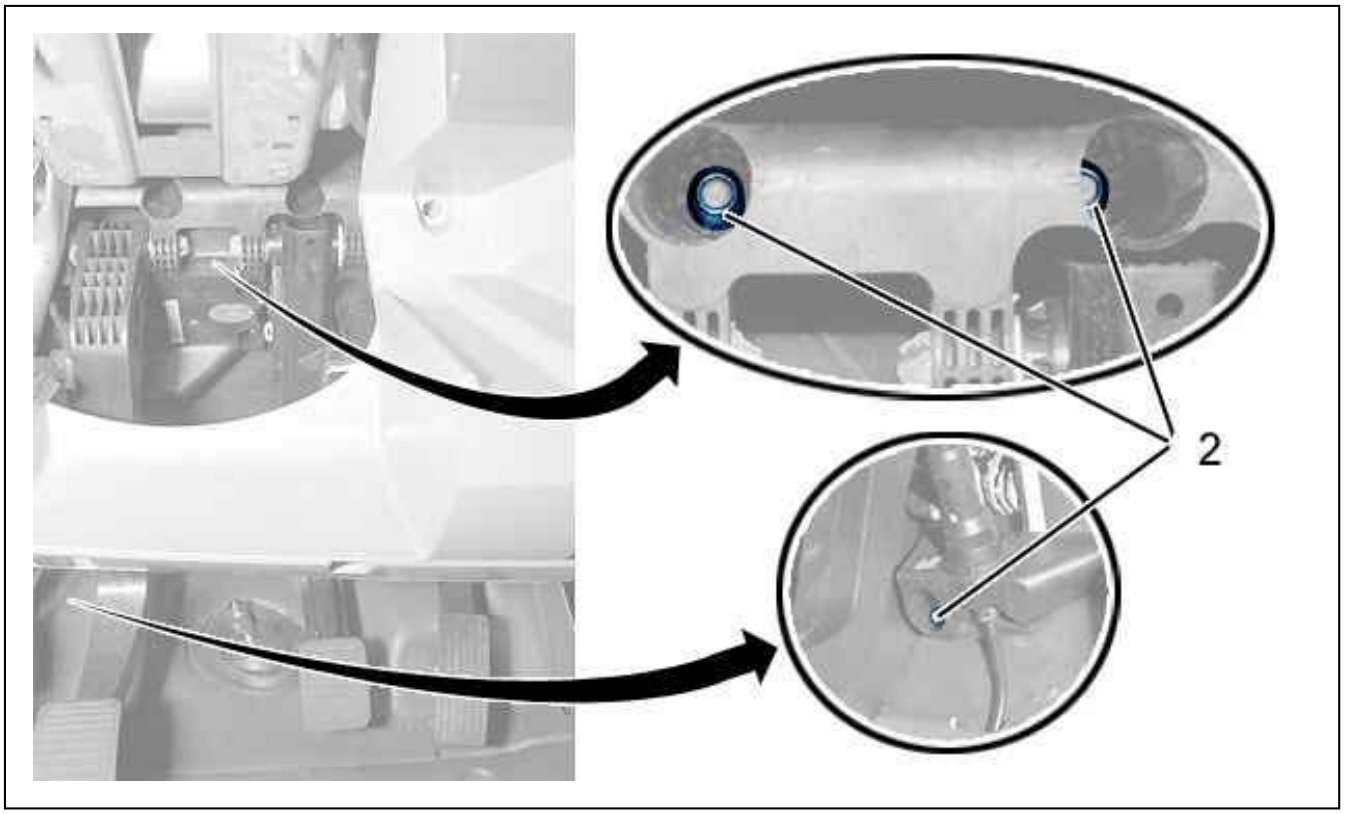

Figure : B3FP7MHD

Remove the nuts (2).

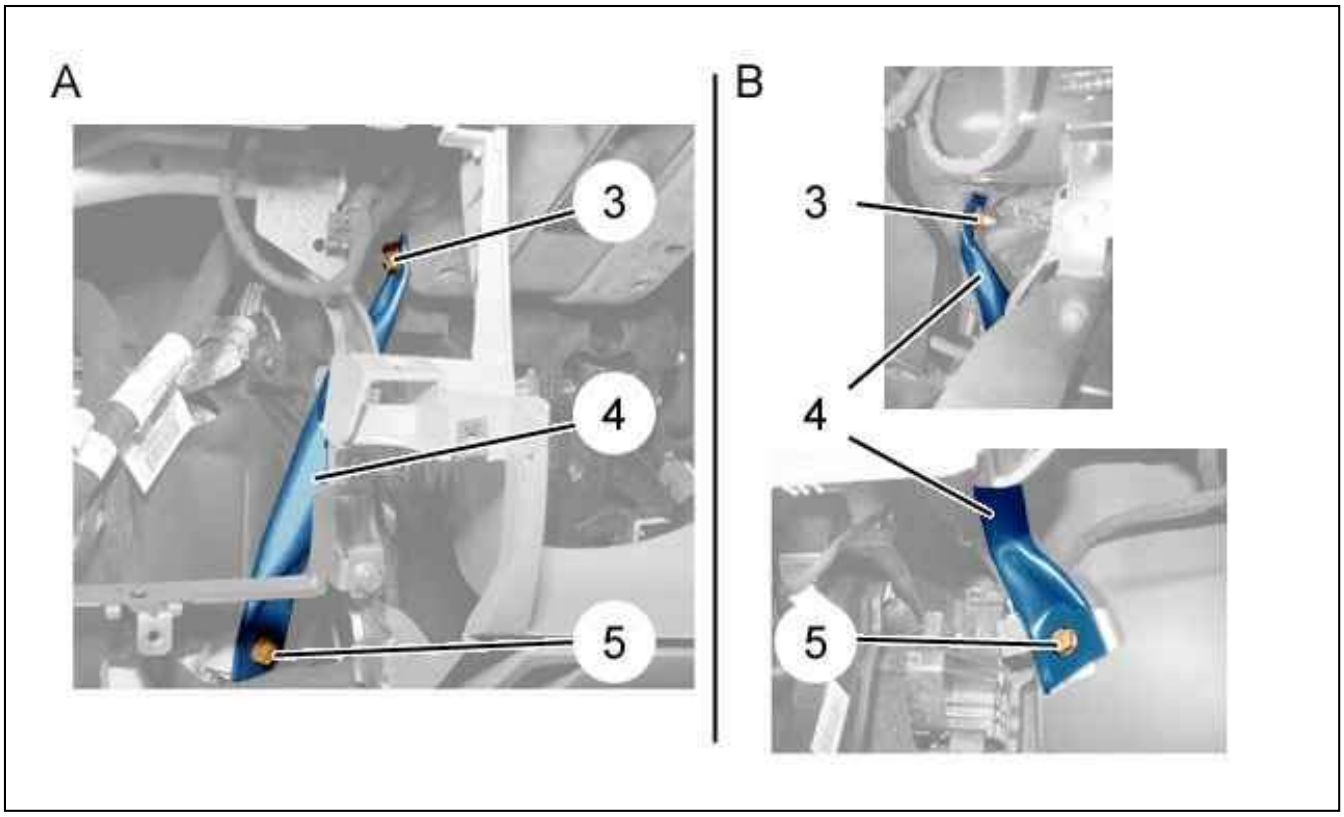

Figure : B3FG29DD

Fitting A : Left-hand drive .
Fitting B : Right-hand drive .
Remove :

- The nut (3)
- The (5) bolt
- The strengthening tube (4)

Disconnect the connectors .

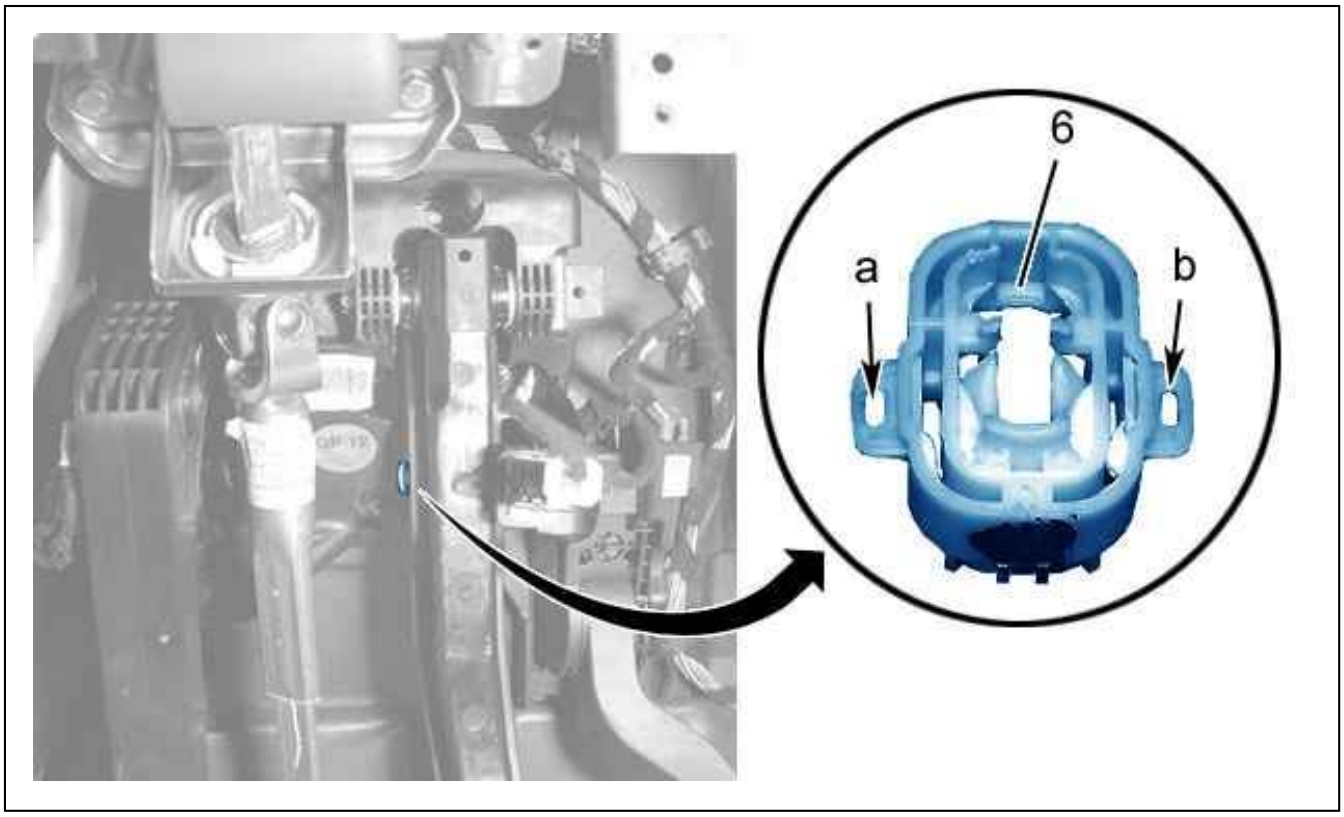

Figure : B3FP7MKD

Uncouple the retaining clip (6) (at "a" and "b") ; Supporting the pedal at the rear.

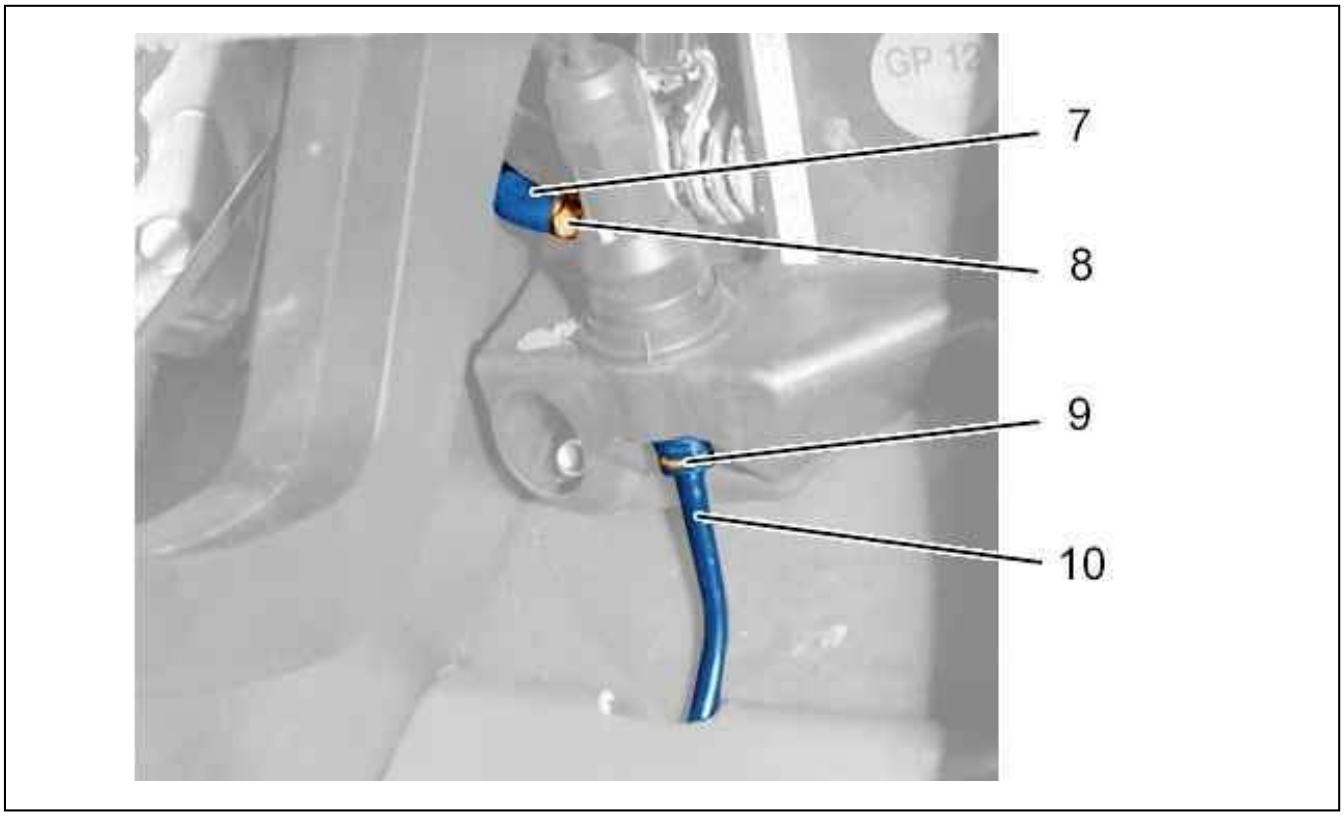

Figure : B3FP7MLD

Uncouple :

- The clip (8) ; Using tool [0172-Z]

- The supply pipe (7) of the master cylinder

Plug the clutch master cylinder supply pipe (7).
Remove the clutch control pipe retaining clip (9).
Uncouple the clutch control pipe (10).
Remove the pedal bracket.

3. Refitting

Position the pedal bracket .
Couple the clutch control pipe (10).
Refit the clutch control pipe retaining clip (9).
Couple up :

- The supply pipe (7) of the master cylinder
- The clip (8) ; Using tool [0172-Z]
- The retaining clip (6)

Reconnect the connectors .
Refit the strengthening tube (4).
Refit and tighten :

- The (5) bolt
- The nut (3)

Refit :

- The nuts (2) ; Tighten to 2,2 daN.m
- The nuts (1) ; Tighten to 2,2 daN.m
- The steering column
- The stop lamp connector
- The built-in systems interface (if necessary)
- The fascia lower cover

Bleed the hydraulic clutch control .

CAUTION : Perform the operations that are required following a reconnection of the ancillaries battery.

Reconnect the ancillaries battery.

REMOVING - REFITTING : MASTER CYLINDER

ESSENTIAL : Observe the safety and cleanliness recommendations .

1. Tooling

tool	Reference	Description
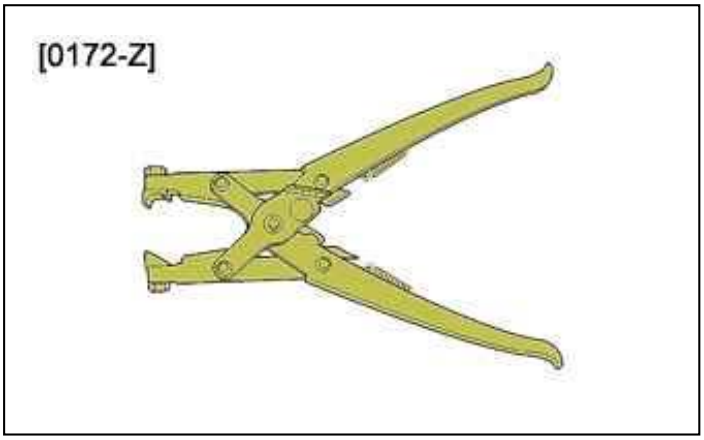 Figure : E5AB09UT	[0172-Z]	pliers for elastic clips

2. Removing

Drain the brake fluid reservoir ; Using a syringe.

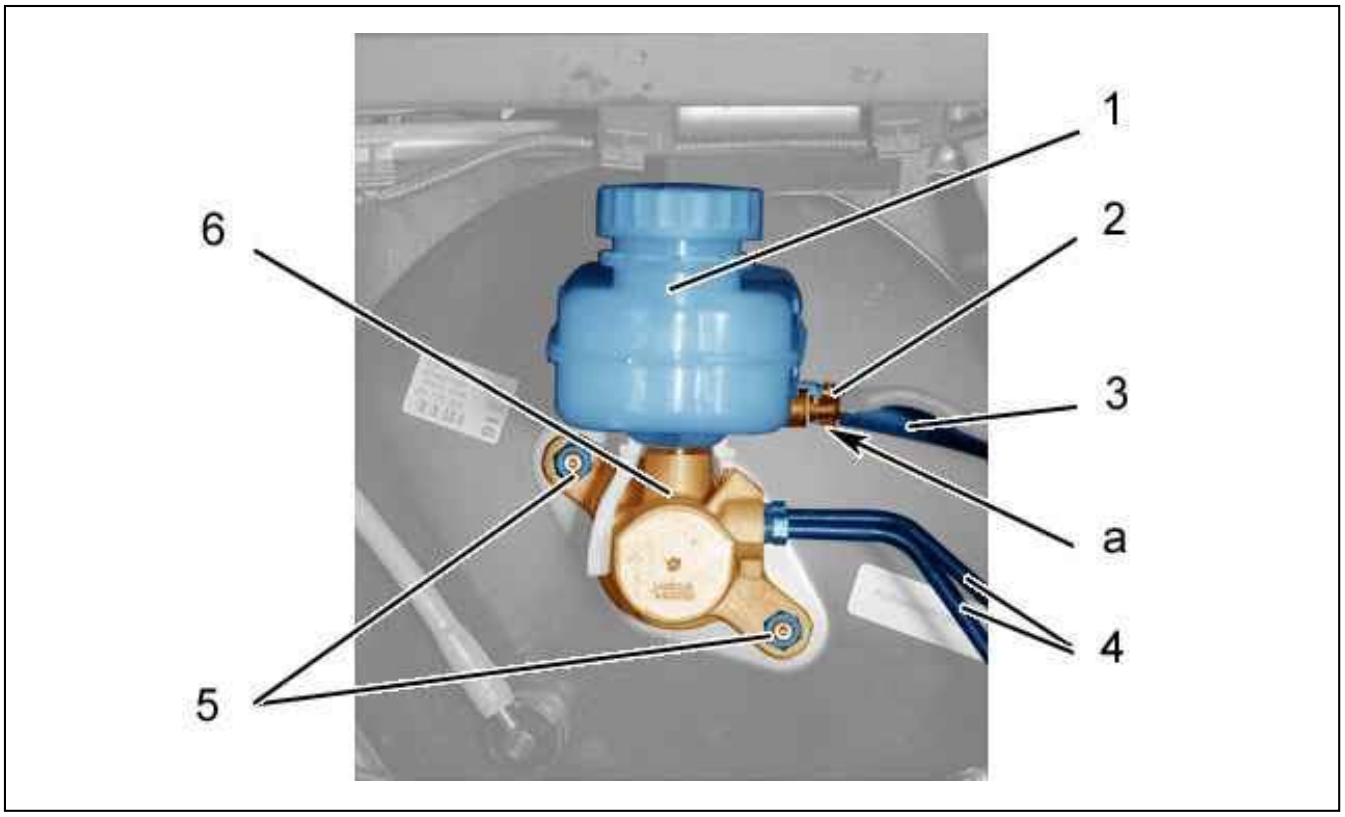

Figure : B3FP7MPD

Disconnect the connector (as "a").
Uncouple :

- The clip (2) ; Using tool [0172-Z]
- The supply pipe (3) of the master cylinder
- The brake pipes (4) (beware of escaping fluid)

Close ; Using plugs :

- The openings of the hydraulic components
- The supply pipe (3) of the master cylinder

Remove :

- The brake fluid reservoir (1)
- The nuts (5)
- The master brake cylinder (6)

3. Refitting

CAUTION : Adhere to the tightening torques .

N.B. : Check the set back of the brake servo thrust rod.

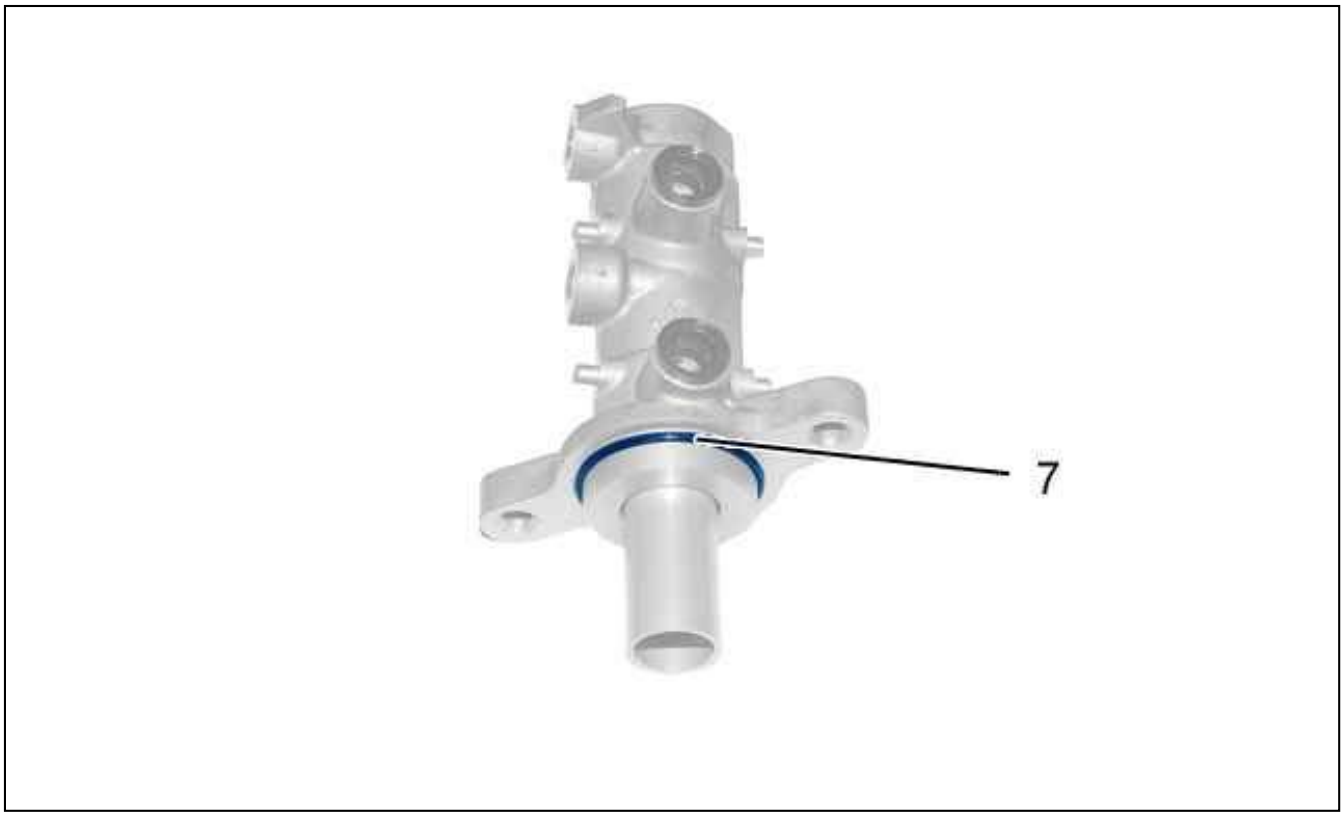

Figure : B3FP7MQD

Fit a new seal (7).
Refit :

- The master brake cylinder (6)
- The nuts (5)
- The brake fluid reservoir (1)

Remove the closers .
Couple up :

- The brake pipes (4)
- The supply pipe (3) of the master cylinder
- The clip (2) ; Using tool [0172-Z]

Reconnect the connector (as "a").
Fill and bleed the braking system .

REMOVING - REFITTING : BRAKE SERVO

ESSENTIAL : Observe the safety and cleanliness recommendations .

1. Removing

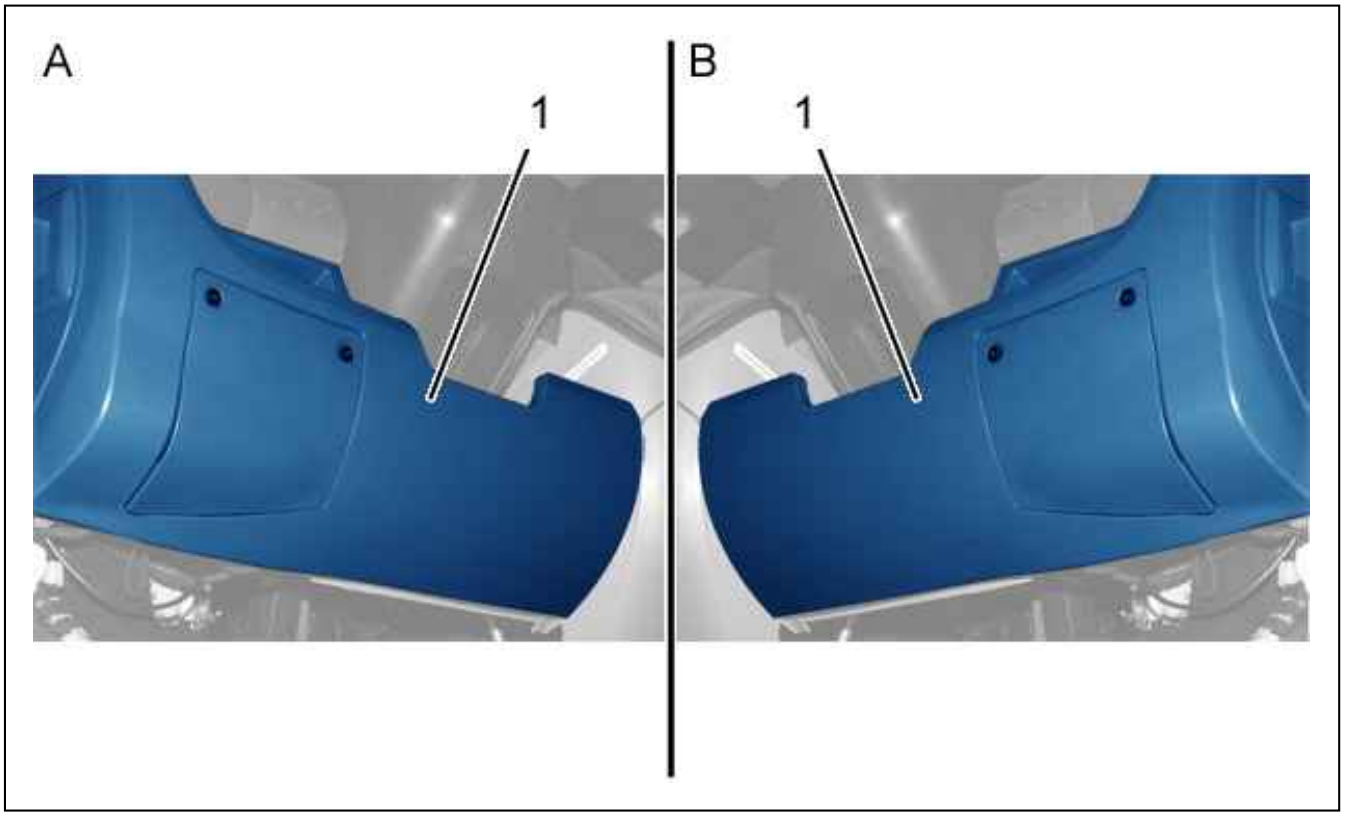

Figure : C5FG1GND

"A" assembly : Left-hand drive .
"B" assembly : Right-hand drive .
Remove the lower lining (1).

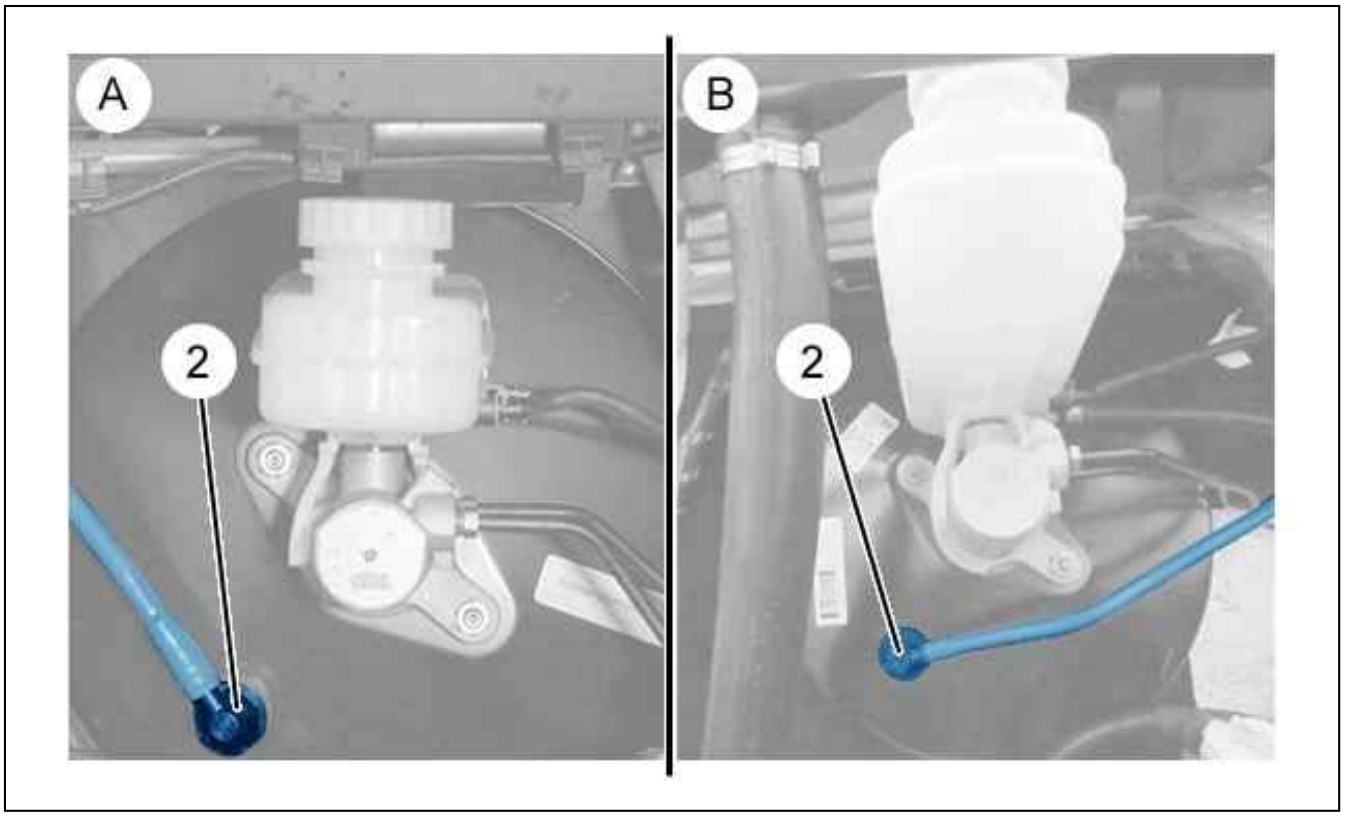

Figure : C5FG1GOD

"A" assembly : Left-hand drive .
"B" assembly : Right-hand drive .
Uncouple :

- The vacuum pipe (2) (according to equipment)
- The vacuum pipe (2) and vacuum sensor assembly (according to equipment)

Remove :

- The master-cylinder
- The stop lamp connector

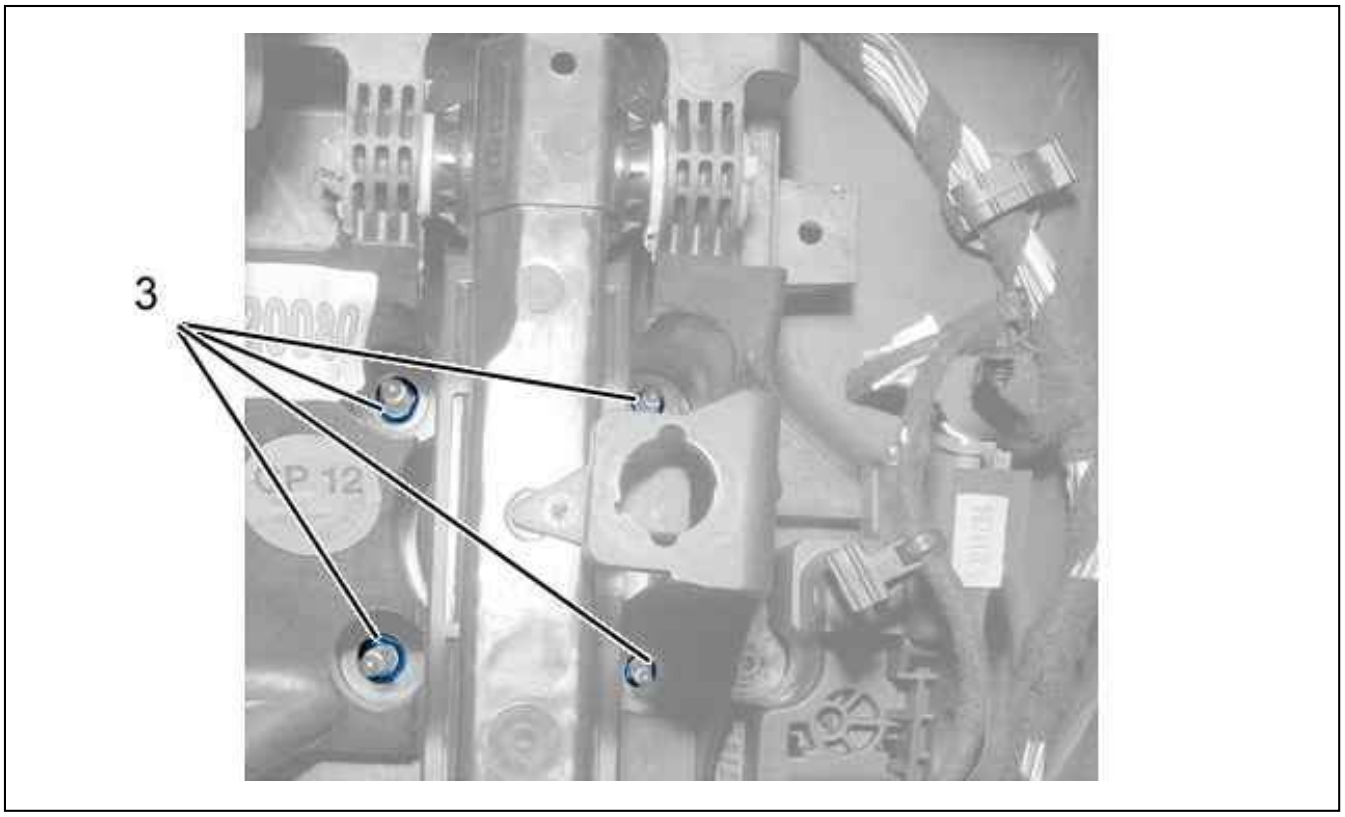

Figure : B3FP7MSD

Remove the nuts (3).

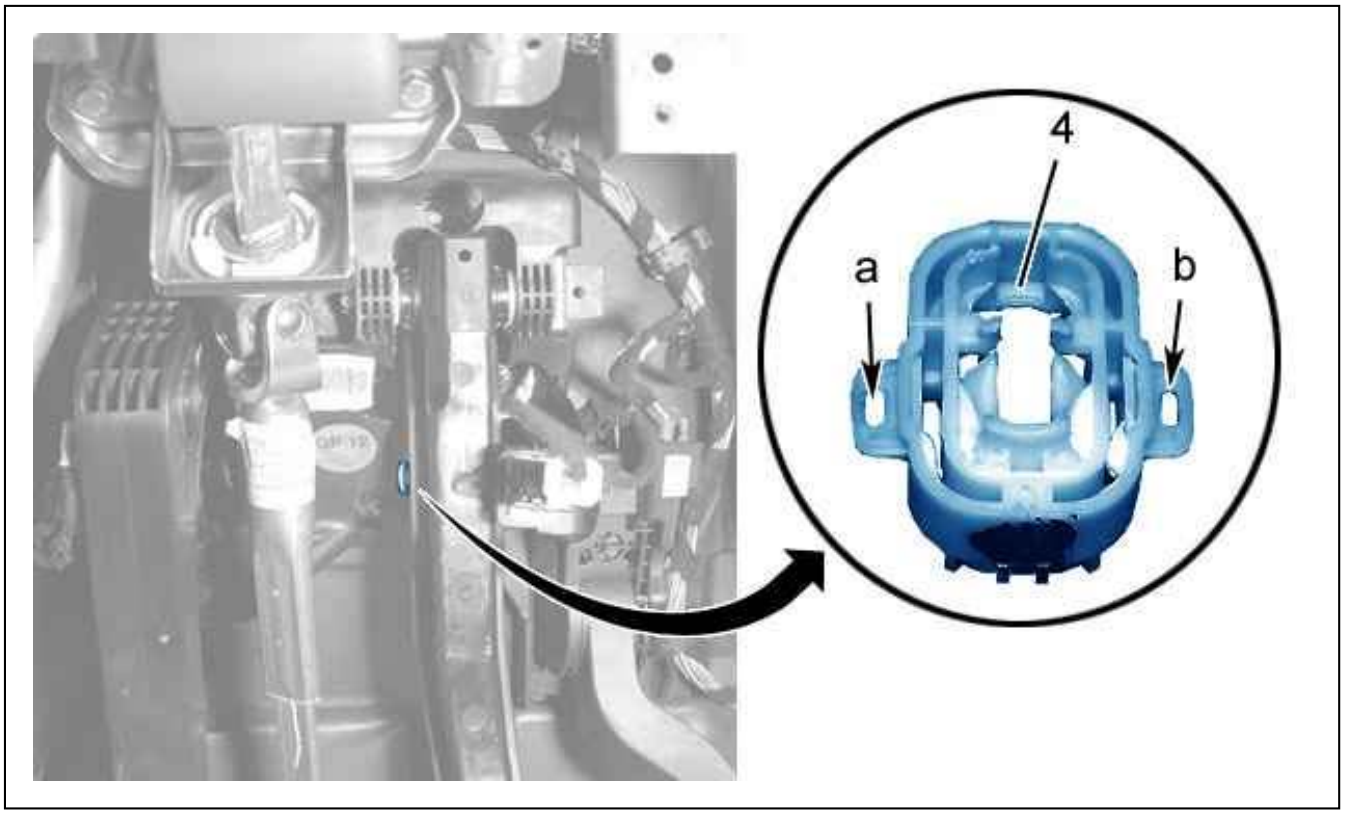

Figure : B3FP7MTD

While holding the brake pedal rearwards, release the retaining clip (4) (at "a", "b").
Remove the brake servo unit.

2. Refitting

CAUTION : Adhere to the tightening torques .

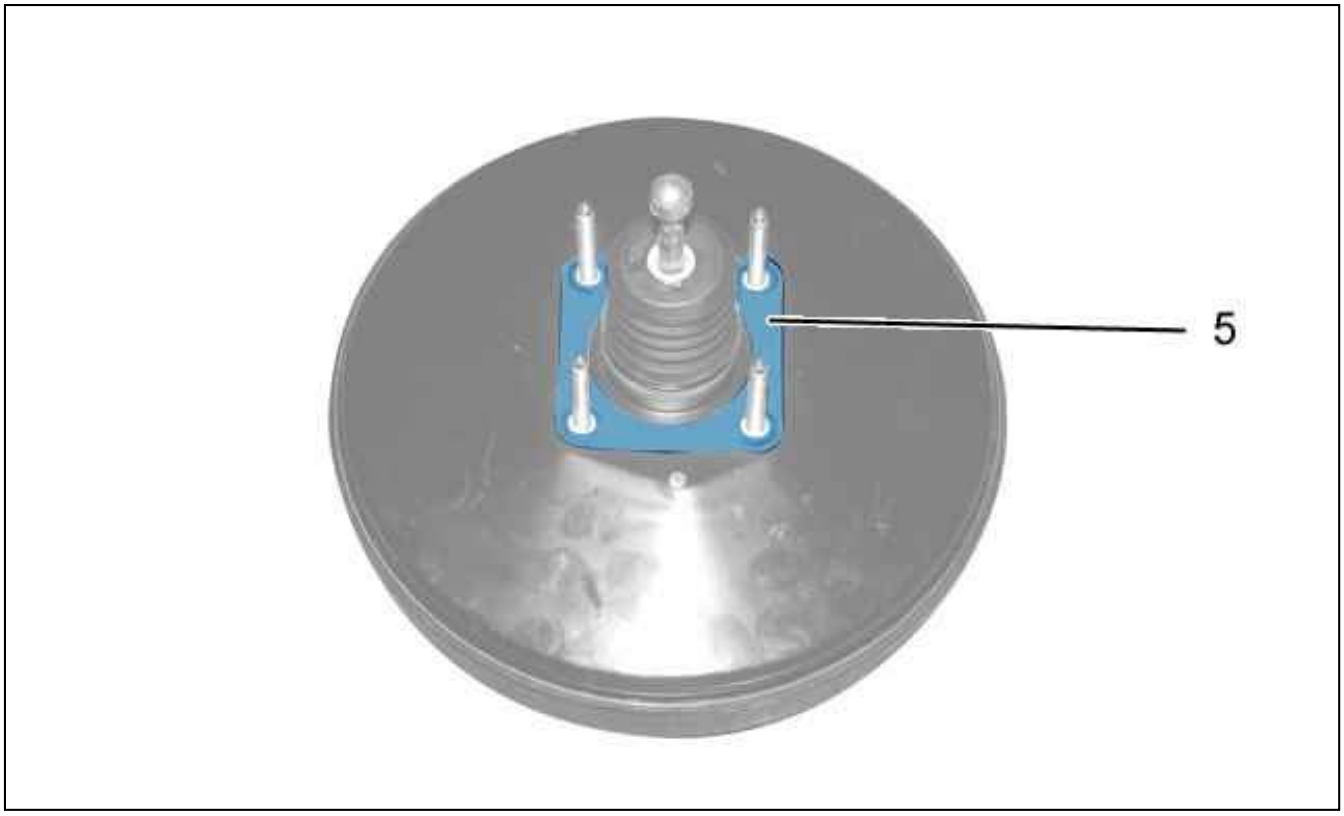

Figure : B3FP7MUD

Fit a new seal (5).

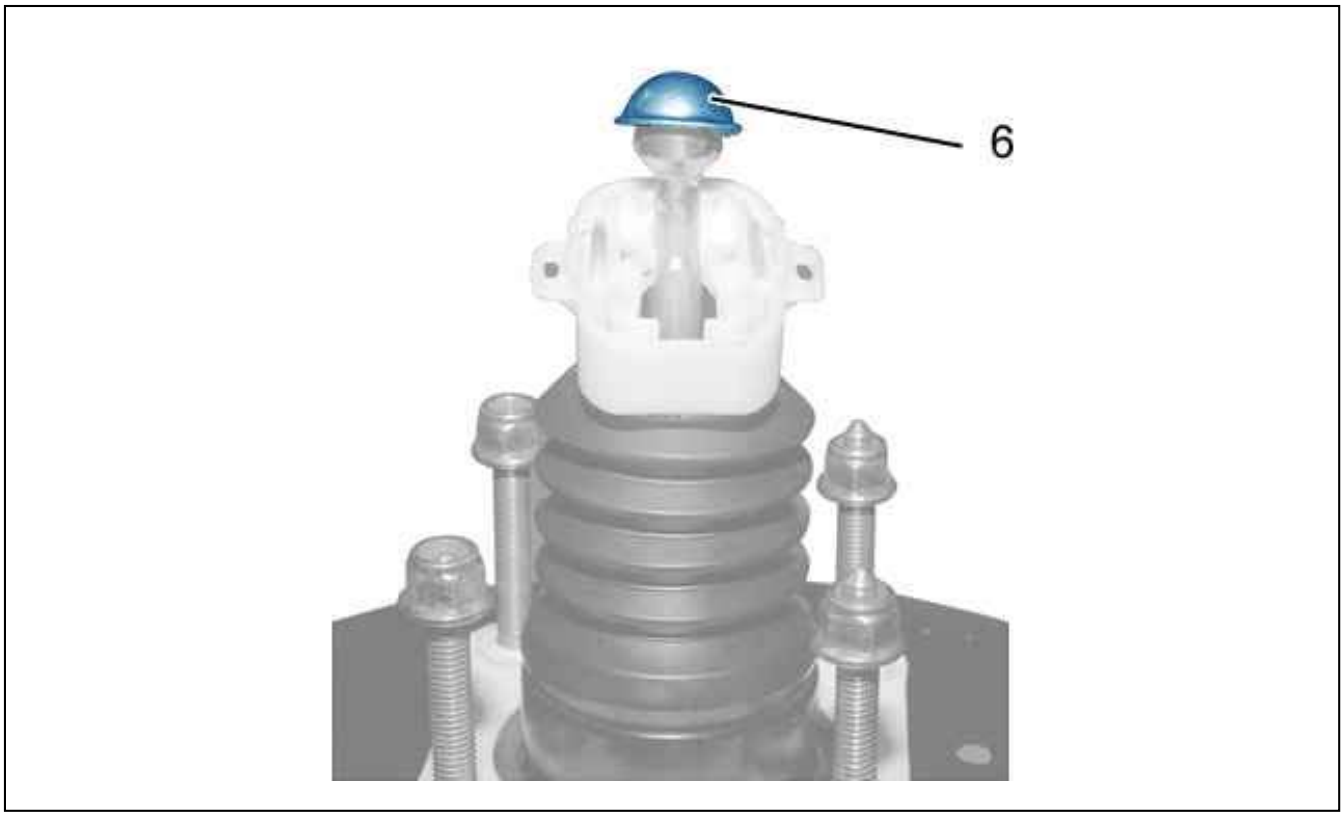

Figure : B3FP7MVD

Grease and position the ball-joint cover (6).
Refit the brake servo .
Couple the retaining clip (4).
Refit :

- The nuts (3)
- The stop lamp connector
- The master-cylinder

Couple up :

- The vacuum pipe (2) (according to equipment)
- The vacuum pipe (2) and vacuum sensor assembly (according to equipment)

Refit lower trim panel (1).

ESSENTIAL : Fill and bleed the braking system .

DRAINING - FILLING - BLEEDING : BRAKE CIRCUIT

ESSENTIAL : Observe the safety and cleanliness recommendations .

1. Tooling

A bleed unit approved by the manufacturer.
A diagnostic tool.

2. Drain - refill

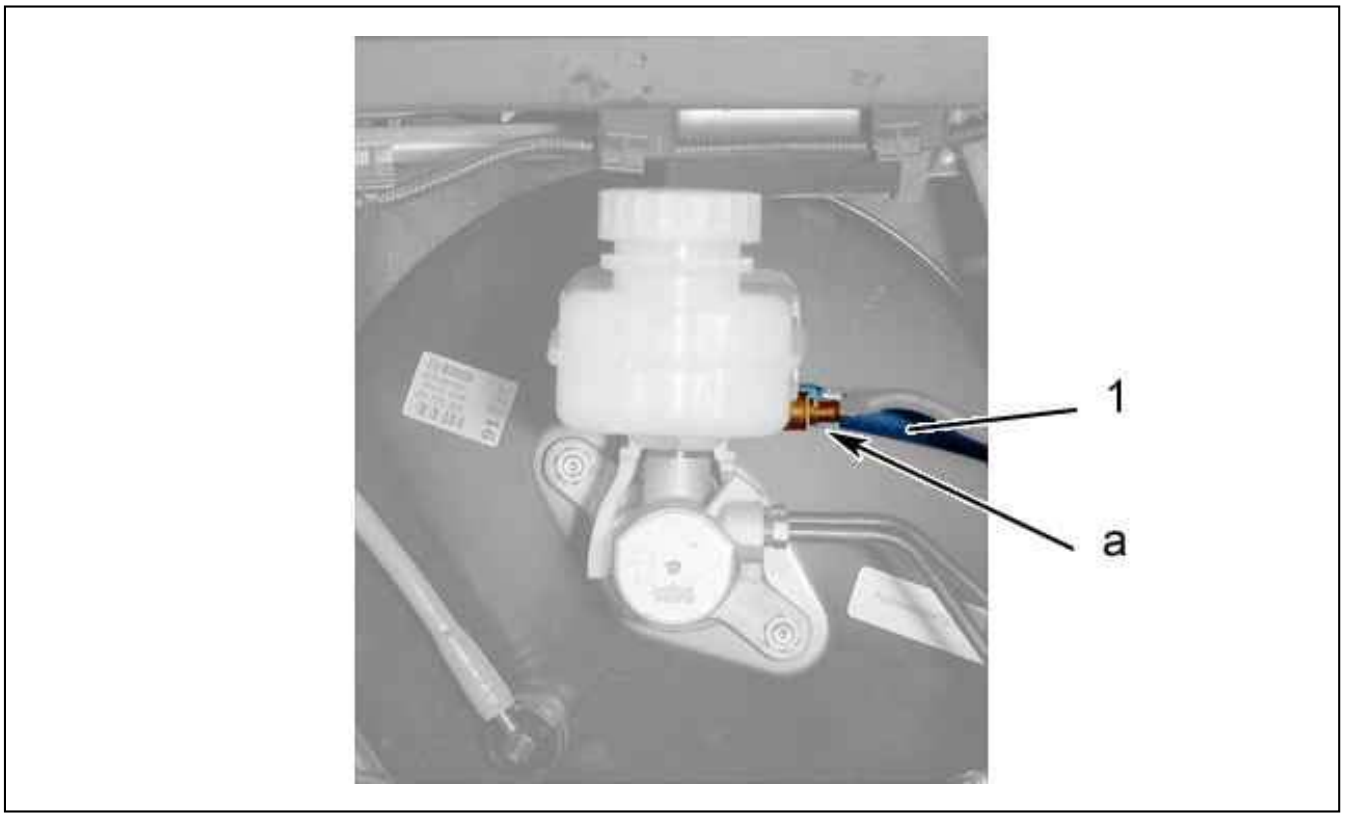

Figure : B3FP7N8D

Disconnect the connector (at "a").
Uncouple the pipe (1).
Remove :

- The brake fluid reservoir cap
- The brake fluid reservoir filter

Drain the brake fluid reservoir as completely as possible ; Using a syringe.
Withdraw the reservoir from its two outlets by pulling upwards.
Empty the brake fluid reservoir .
Clean the brake fluid reservoir.
Refit the brake fluid reservoir.
Couple the pipe (1).

N.B. : Fit a new clic clip .

Reconnect the connector (at "a").

CAUTION : Use only approved and recommended hydraulic fluids.

Fill the brake system reservoir.
Bleed the brake system.

3. Bleeding the brake system

CAUTION : During the bleeding operation : Keep the fluid topped up in the reservoir and complete it. Use new brake fluid only.

Bleed the primary brake circuit during a conventional operation.
Bleed the secondary brake circuit in the following cases :

- Venting the secondary brake circuit
- Starting the pump
- supply to the electrovalves

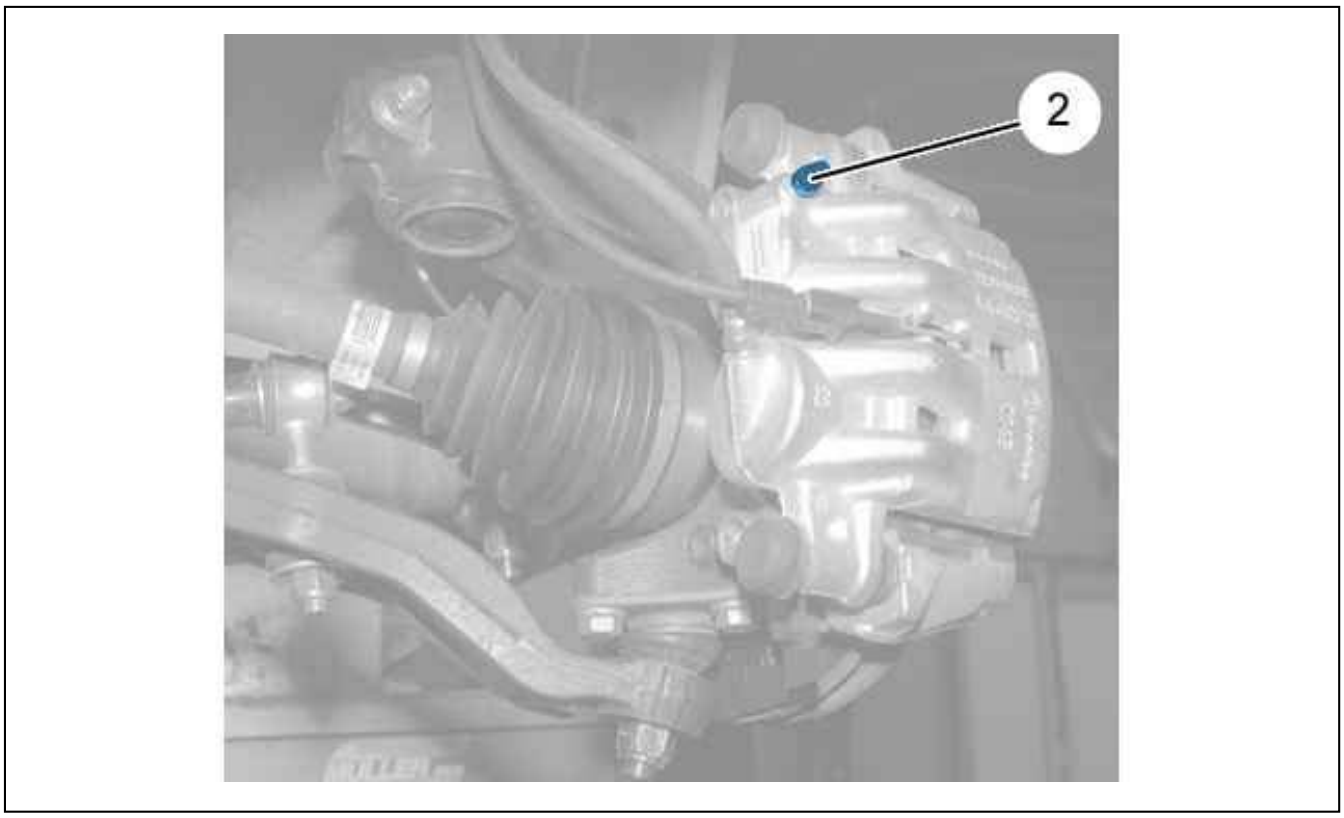

Figure : B3FP7N9D

front brake caliper : bleed screw(s) (2).

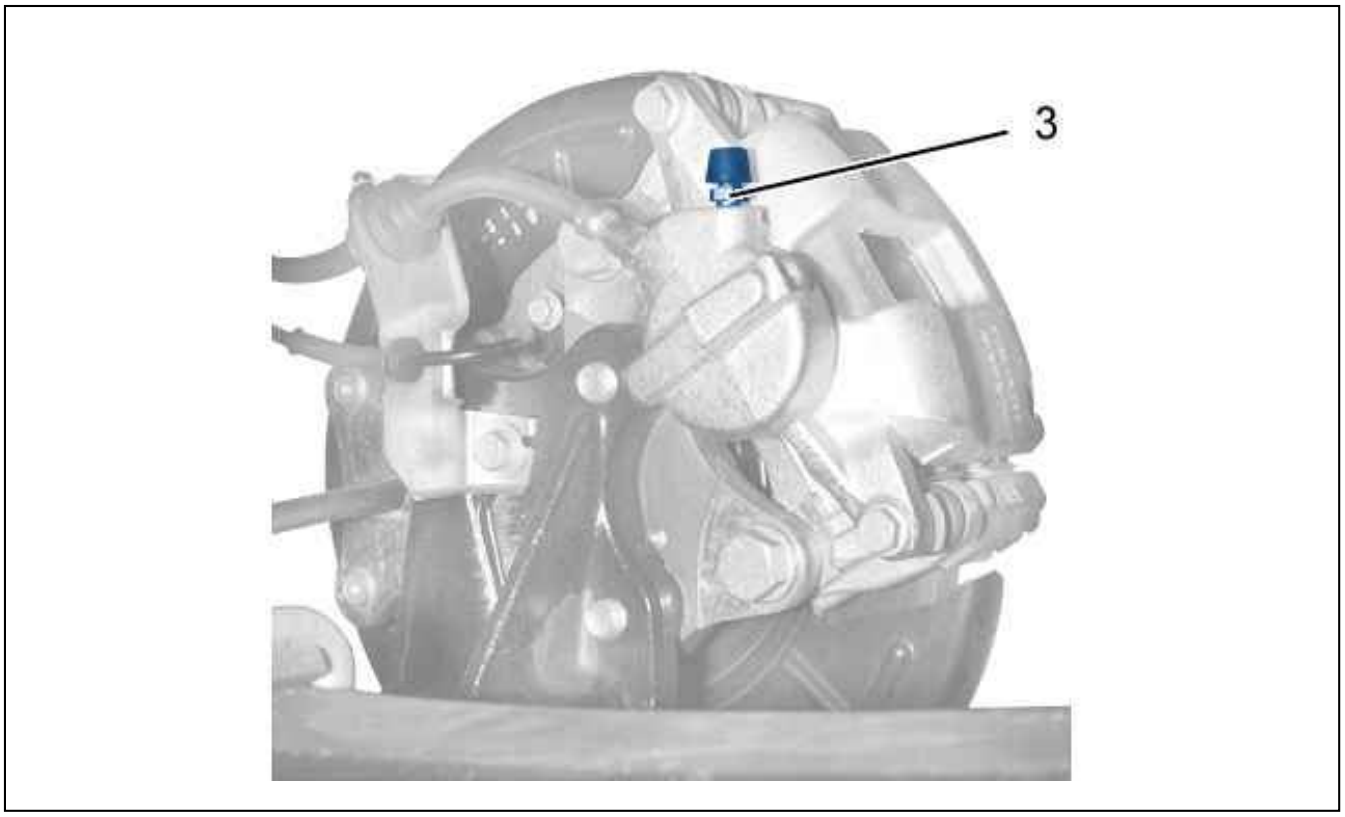

Figure : B3FP7NAD

rear brake caliper : bleed screw(s) (3).

3.1. Bleeding the primary braking circuit

CAUTION : The ABS system must not be in operation during the bleeding procedure.

Use a bleed tool approved by the manufacturer.

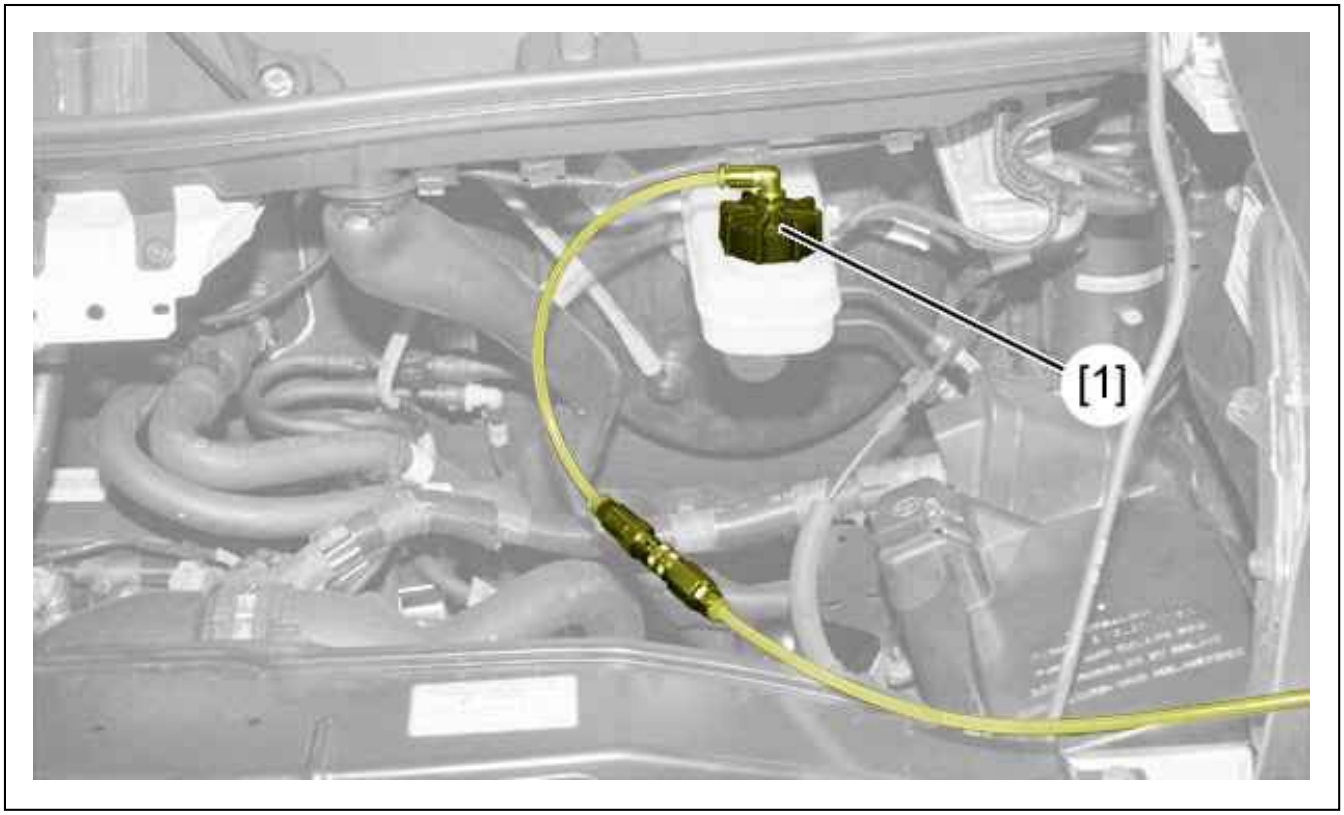

Figure : B1BPRWAD

Connect the bleeding apparatus [/] on the brake fluid reservoir .
Set the pressure of the equipment to 2 bars.
Bleeding order :

- RH rear
- Left hand front
- Left hand rear
- Right hand front

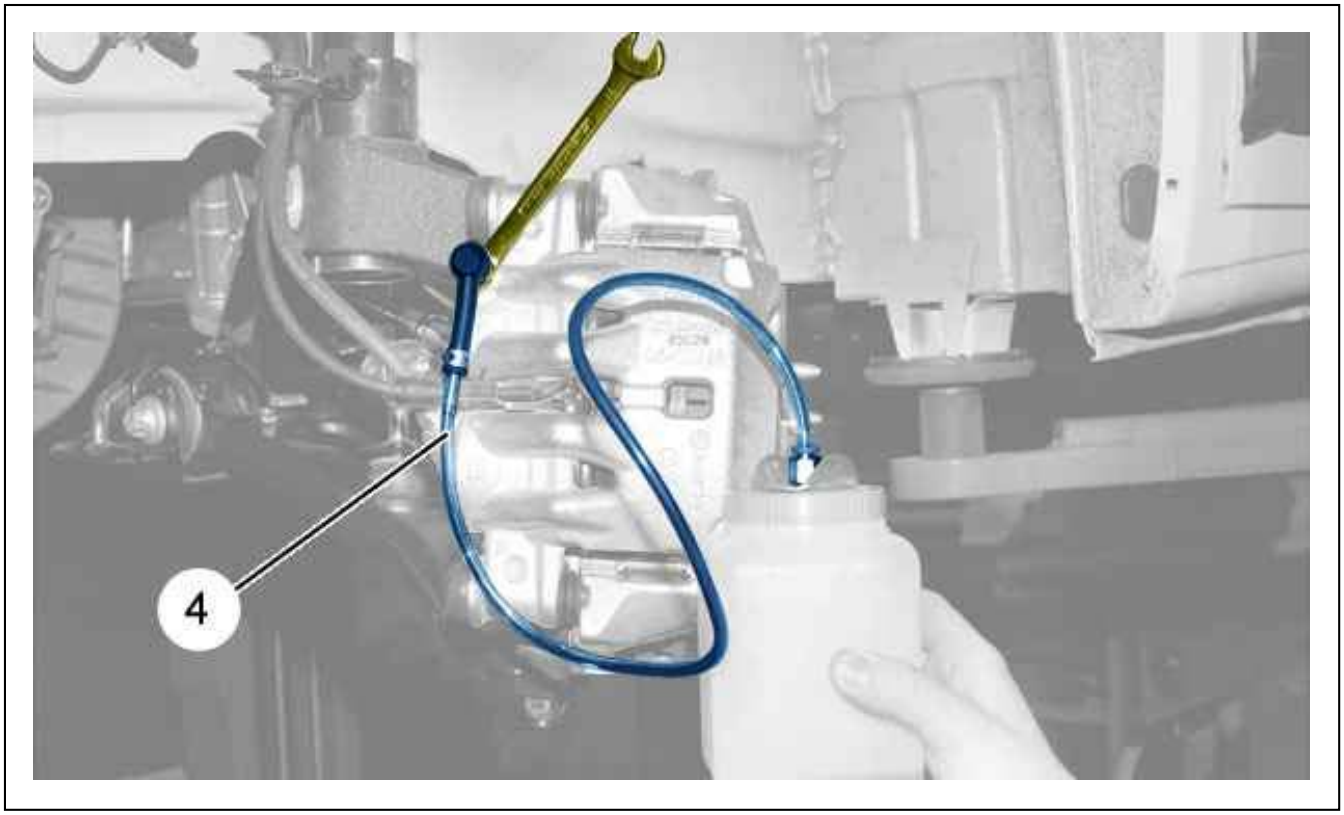

Figure : B3FP7NBD

CAUTION : Proceed bolt by bolt in the order shown.

Perform the following operations :

- Couple a transparent pipe (4) to the bleed screw
- Submerge the other end of the tube into a clean receptacle
- Open the bleed screw
- Wait for the liquid to flow without air bubbles
- Close the bleed screw

Remove the bleeding equipment .
Check the brake fluid level (between the "MIN" level and the "MAX" level).
If necessary, fill with approved and recommended synthetic brake fluid.

CAUTION : Any operation which may cause the pump to start or energize electrovalves is to be avoided (the system has been pre-filled and bled).

3.2. Bleed the secondary brake circuit (ABS/ESP hydraulic block)

N.B. : The equipment to be bled is always connected to the brake fluid reservoir.

Select a diagnostic tool.
Connect the diagnostic tool.
From the screen of the diagnostic tool, select the menu : "ABS PURGE".
Follow the instructions on the diagnostic tool.
Bleed the brakes observing the order indicated (ABS type bleeding operation).
At the end of the bleed programme, check and top up, if necessary, the brake fluid level.
Check the brake pedal travel (no extension), otherwise repeat the bleeding procedure.
Remove the tools.

Vehicle

JUMPER

Data

New

Domain

Comfort And Convenience

Function

Additional Under-Seat Heating

Function Diagram

Principle

Wiring

Installation

9C- 06/10/2013

SVG Viewer

Tools

History

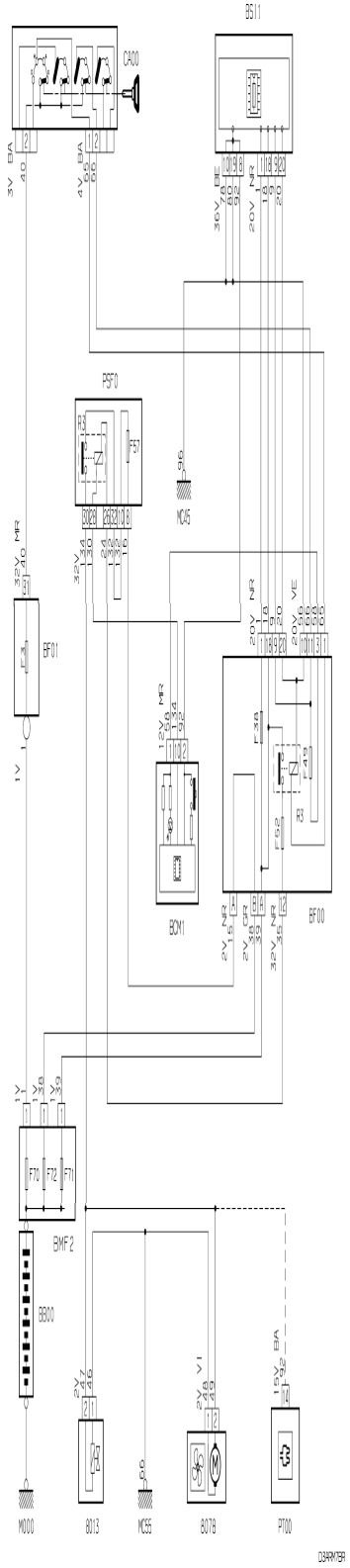
BS11
CA00
PSF0
MC45
BF01
BCM1
BF00
BMF2
BB00
M000
8013
MC35
8078
PT00
D3ARM7BR

Vehicle

JUMPER

Data

New

Domain

Comfort And Convenience

Function

Additional Under-Seat Heating

Function Diagram

Principle

Wiring

Installation

9C- 06/10/2013

SVG Viewer

Tools

History

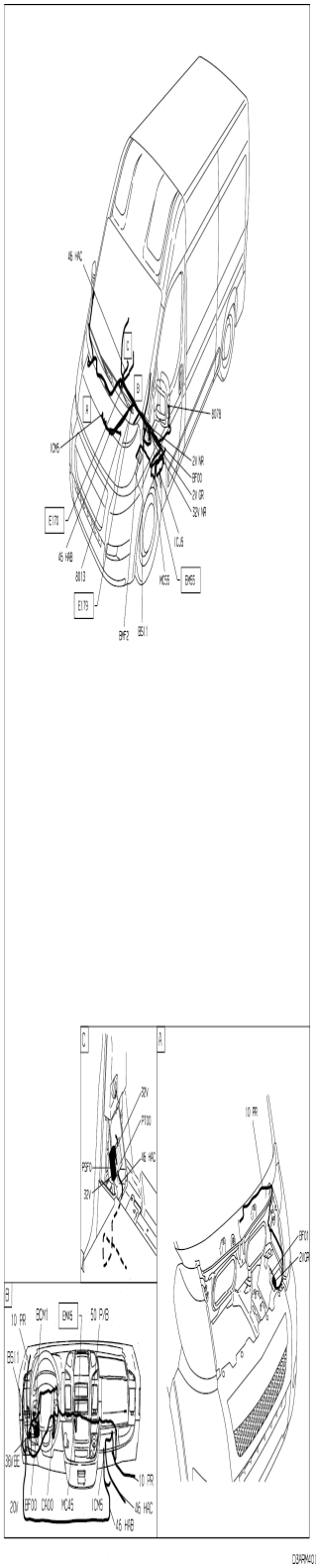
45 HAC
C
B
A
BD70
1CM5
2V NR
BF00
2V GR
32V NR
E170
1CL5
45 HAB
BD13
MC55
BM55
E179
BMF2
BS11
C
A
32V
PT00
45 HAC
BF00
32V
10 PR
BF00
2V GR
B
10 PR
BCM1
BM5
50 PVB
BS11
36V BE
10 PR
20V
BF00
CA00
MC45
1CM5
45 HAC
45 HAB

DIAGRAM01

Vehicle

JUMPER

Data

New

Domain

Comfort And Convenience

Function

Additional Heating Unit

Function Diagram

Principle

Wiring

Installation

9C- 06/10/2013

SVG Viewer

Tools

History

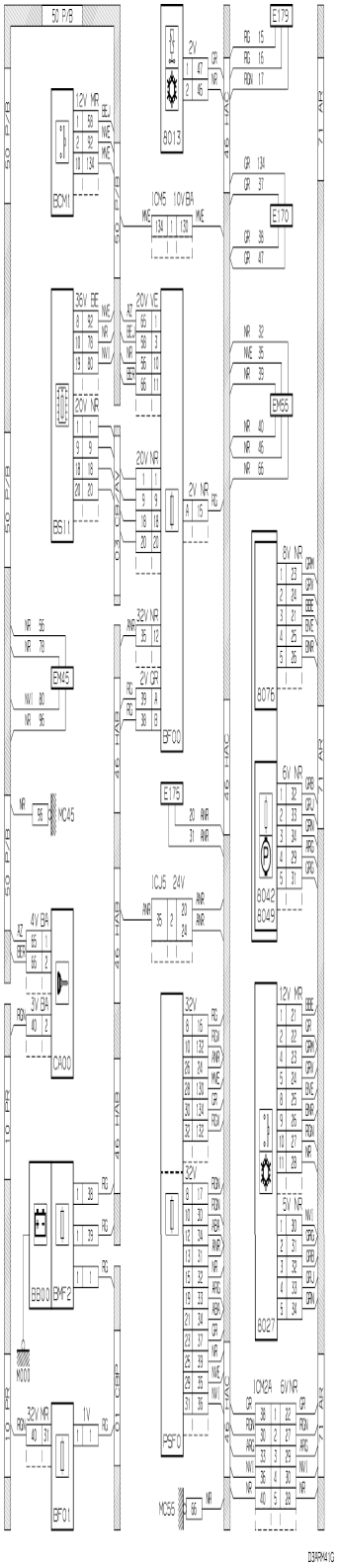
50 P/B
BCM1
BS11
EM45
MC45
CA00
BB00
BMF2
M100
BF01
8013
ICM5 10V BA
BF00
E175
ICJ5 24V
PSF0
MC55
E179
E170
EM55
8076
8042
8049
8027
ICM2A 6V NR
D3ARM41G

Vehicle

JUMPER

Data

New

Domain

Comfort And Convenience

Function

Additional Heating Unit

Function Diagram

Principle

Wiring

Installation

9C- 06/10/2013

SVG Viewer

Tools

History

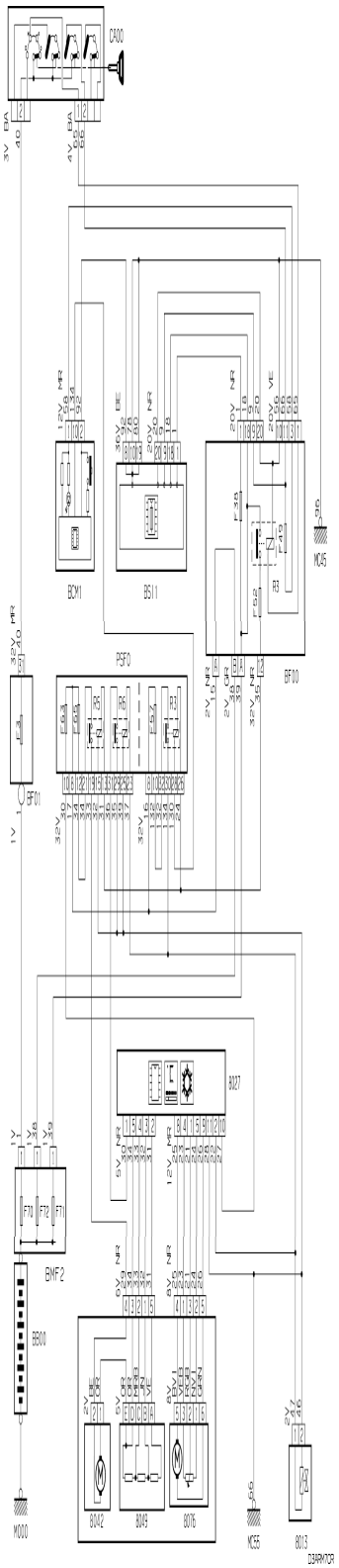
CA00
BCM1
BSI1
BF00
PSF0
BF01
BMF2
BB00
MC45
MC55
MC00
8027
8042
8049
8076
8013
DIARMTCR

Vehicle

JUMPER

Data

New

Domain

Comfort And Convenience

Function

Air Conditioning

Function Diagram

Principle

Wiring

Installation

9C- 06/10/2013

SVG Viewer

Tools

History

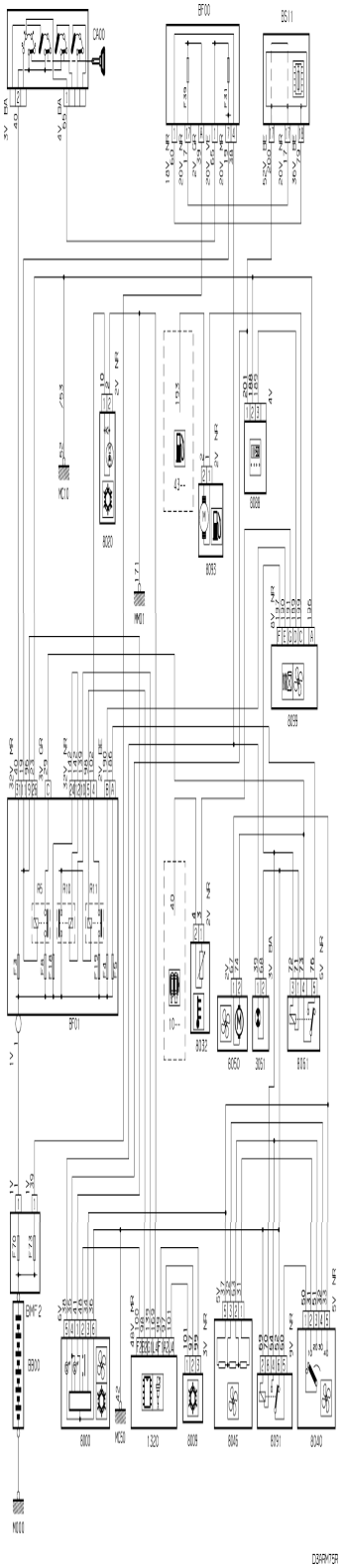

Vehicle

JUMPER

Data

New

Domain

Protections And Doors

Function

Alarm

Function Diagram

Principle

Synopsis

Wiring

Installation

9C- 06/10/2013

SVG Viewer

Tools

History

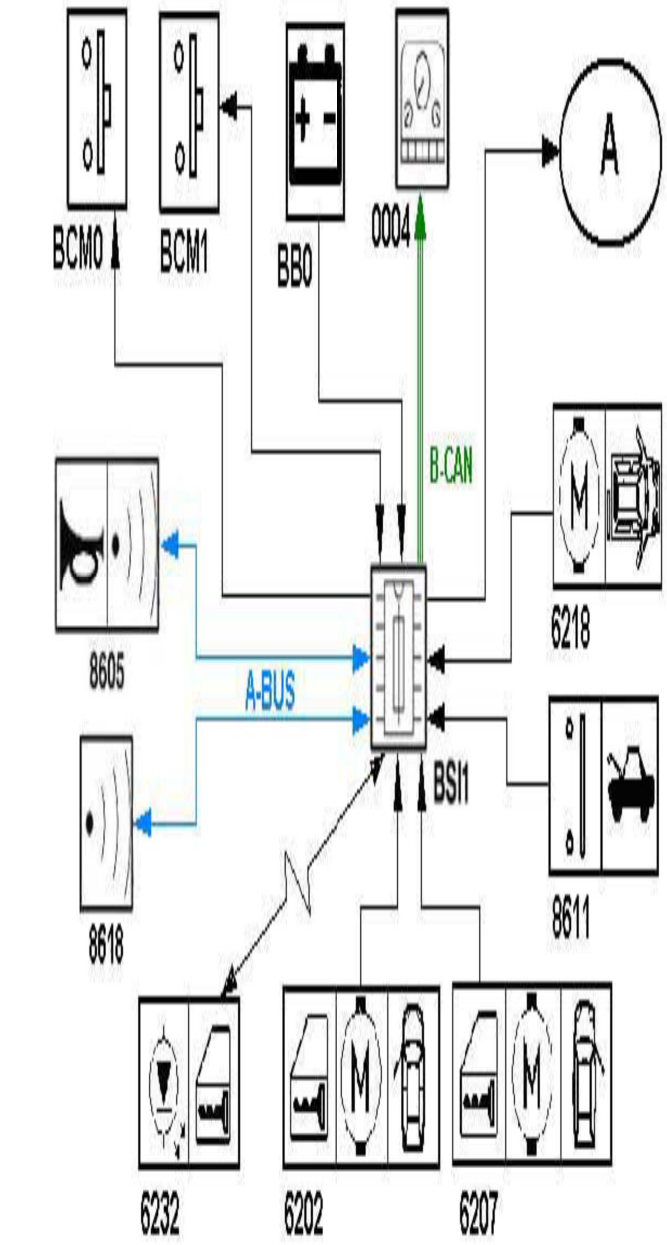
BCM0
BCM1
BB0
0004
A
B-CAN
8605
A-BUS
6218
BSI1
8618
8611
6232
6202
6207

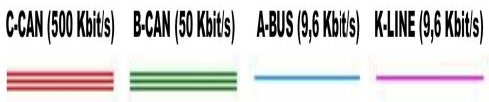
C-CAN (500 Kbit/s)
B-CAN (50 Kbit/s)
A-BUS (9,6 Kbit/s)
K-LINE (9,6 Kbit/s)

Vehicle

JUMPER

Data

New

Domain

Protections And Doors

Function

Alarm

Function Diagram

Principle

Synopsis

Wiring

Installation

9C- 06/10/2013

SVG Viewer

Tools

History

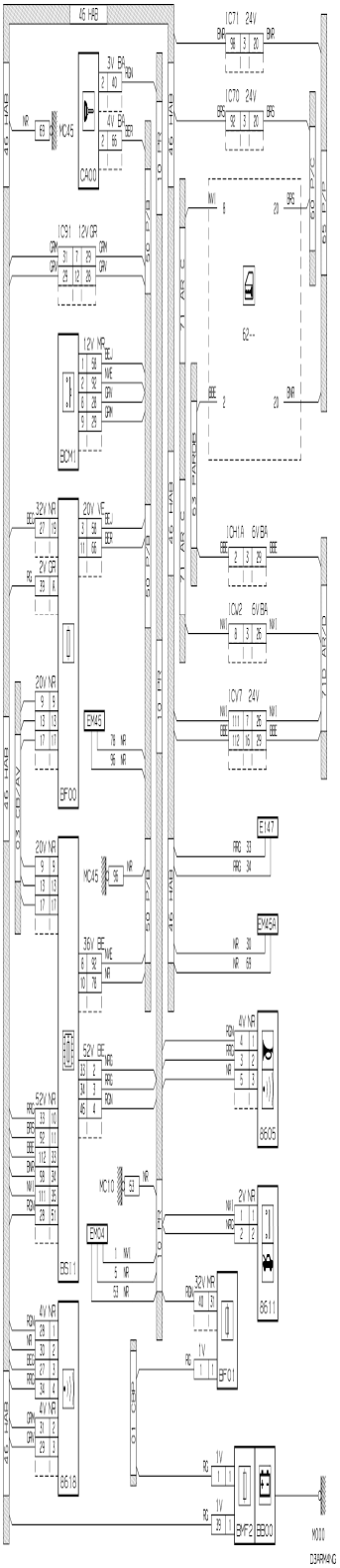
45 MR
BAT 36
BAT 36 CB 20 A
BAT 36 CB 5 A
BAT 36 CB 10 A
BAT 36 CB 7.5 A
BAT 36 CB 15 A
BAT 36 CB 30 A
BAT 36 CB 40 A
BAT 36 CB 50 A
BAT 36 CB 60 A
BAT 36 CB 70 A
BAT 36 CB 80 A
BAT 36 CB 100 A
BAT 36 CB 125 A
BAT 36 CB 150 A
BAT 36 CB 200 A
BAT 36 CB 250 A
BAT 36 CB 300 A
BAT 36 CB 400 A
BAT 36 CB 500 A
BAT 36 CB 600 A
BAT 36 CB 800 A
BAT 36 CB 1000 A
BAT 36 CB 1250 A
BAT 36 CB 1500 A
BAT 36 CB 2000 A
BAT 36 CB 2500 A
BAT 36 CB 3000 A
BAT 36 CB 4000 A
BAT 36 CB 5000 A
BAT 36 CB 6000 A
BAT 36 CB 8000 A
BAT 36 CB 10000 A
BAT 36 CB 12500 A
BAT 36 CB 15000 A
BAT 36 CB 20000 A
BAT 36 CB 25000 A
BAT 36 CB 30000 A
BAT 36 CB 40000 A
BAT 36 CB 50000 A
BAT 36 CB 60000 A
BAT 36 CB 80000 A
BAT 36 CB 100000 A
BAT 36 CB 125000 A
BAT 36 CB 150000 A
BAT 36 CB 200000 A
BAT 36 CB 250000 A
BAT 36 CB 300000 A
BAT 36 CB 400000 A
BAT 36 CB 500000 A
BAT 36 CB 600000 A
BAT 36 CB 800000 A
BAT 36 CB 1000000 A
BAT 36 CB 1250000 A
BAT 36 CB 1500000 A
BAT 36 CB 2000000 A
BAT 36 CB 2500000 A
BAT 36 CB 3000000 A
BAT 36 CB 4000000 A
BAT 36 CB 5000000 A
BAT 36 CB 6000000 A
BAT 36 CB 8000000 A
BAT 36 CB 10000000 A
BAT 36 CB 12500000 A
BAT 36 CB 15000000 A
BAT 36 CB 20000000 A
BAT 36 CB 25000000 A
BAT 36 CB 30000000 A
BAT 36 CB 40000000 A
BAT 36 CB 50000000 A
BAT 36 CB 60000000 A
BAT 36 CB 80000000 A
BAT 36 CB 100000000 A
BAT 36 CB 125000000 A
BAT 36 CB 150000000 A
BAT 36 CB 200000000 A
BAT 36 CB 250000000 A
BAT 36 CB 300000000 A
BAT 36 CB 400000000 A
BAT 36 CB 500000000 A
BAT 36 CB 600000000 A
BAT 36 CB 800000000 A
BAT 36 CB 1000000000 A
BAT 36 CB 1250000000 A
BAT 36 CB 1500000000 A
BAT 36 CB 2000000000 A
BAT 36 CB 2500000000 A
BAT 36 CB 3000000000 A
BAT 36 CB 4000000000 A
BAT 36 CB 5000000000 A
BAT 36 CB 6000000000 A
BAT 36 CB 8000000000 A
BAT 36 CB 10000000000 A
BAT 36 CB 12500000000 A
BAT 36 CB 15000000000 A
BAT 36 CB 20000000000 A
BAT 36 CB 25000000000 A
BAT 36 CB 30000000000 A
BAT 36 CB 40000000000 A
BAT 36 CB 50000000000 A
BAT 36 CB 60000000000 A
BAT 36 CB 80000000000 A
BAT 36 CB 100000000000 A
BAT 36 CB 125000000000 A
BAT 36 CB 150000000000 A
BAT 36 CB 200000000000 A
BAT 36 CB 250000000000 A
BAT 36 CB 300000000000 A
BAT 36 CB 400000000000 A
BAT 36 CB 500000000000 A
BAT 36 CB 600000000000 A
BAT 36 CB 800000000000 A
BAT 36 CB 1000000000000 A
BAT 36 CB 1250000000000 A
BAT 36 CB 1500000000000 A
BAT 36 CB 2000000000000 A
BAT 36 CB 2500000000000 A
BAT 36 CB 3000000000000 A
BAT 36 CB 4000000000000 A
BAT 36 CB 5000000000000 A
BAT 36 CB 6000000000000 A
BAT 36 CB 8000000000000 A
BAT 36 CB 10000000000000 A
BAT 36 CB 12500000000000 A
BAT 36 CB 15000000000000 A
BAT 36 CB 20000000000000 A
BAT 36 CB 25000000000000 A
BAT 36 CB 30000000000000 A
BAT 36 CB 40000000000000 A
BAT 36 CB 50000000000000 A
BAT 36 CB 60000000000000 A
BAT 36 CB 80000000000000 A
BAT 36 CB 100000000000000 A
BAT 36 CB 125000000000000 A
BAT 36 CB 150000000000000 A
BAT 36 CB 200000000000000 A
BAT 36 CB 250000000000000 A
BAT 36 CB 300000000000000 A
BAT 36 CB 400000000000000 A
BAT 36 CB 500000000000000 A
BAT 36 CB 600000000000000 A
BAT 36 CB 800000000000000 A
BAT 36 CB 1000000000000000 A
BAT 36 CB 1250000000000000 A
BAT 36 CB 1500000000000000 A
BAT 36 CB 2000000000000000 A
BAT 36 CB 2500000000000000 A
BAT 36 CB 3000000000000000 A
BAT 36 CB 4000000000000000 A
BAT 36 CB 5000000000000000 A
BAT 36 CB 6000000000000000 A
BAT 36 CB 8000000000000000 A
BAT 36 CB 10000000000000000 A
BAT 36 CB 12500000000000000 A
BAT 36 CB 15000000000000000 A
BAT 36 CB 20000000000000000 A
BAT 36 CB 25000000000000000 A
BAT 36 CB 30000000000000000 A
BAT 36 CB 40000000000000000 A
BAT 36 CB 50000000000000000 A
BAT 36 CB 60000000000000000 A
BAT 36 CB 80000000000000000 A
BAT 36 CB 100000000000000000 A
BAT 36 CB 125000000000000000 A
BAT 36 CB 150000000000000000 A
BAT 36 CB 200000000000000000 A
BAT 36 CB 250000000000000000 A
BAT 36 CB 300000000000000000 A
BAT 36 CB 400000000000000000 A
BAT 36 CB 500000000000000000 A
BAT 36 CB 600000000000000000 A
BAT 36 CB 800000000000000000 A
BAT 36 CB 1000000000000000000 A
BAT 36 CB 1250000000000000000 A
BAT 36 CB 1500000000000000000 A
BAT 36 CB 2000000000000000000 A
BAT 36 CB 2500000000000000000 A
BAT 36 CB 3000000000000000000 A
BAT 36 CB 4000000000000000000 A
BAT 36 CB 5000000000000000000 A
BAT 36 CB 6000000000000000000 A
BAT 36 CB 8000000000000000000 A
BAT 36 CB 10000000000000000000 A
BAT 36 CB 12500000000000000000 A
BAT 36 CB 15000000000000000000 A
BAT 36 CB 20000000000000000000 A
BAT 36 CB 25000000000000000000 A
BAT 36 CB 30000000000000000000 A
BAT 36 CB 40000000000000000000 A
BAT 36 CB 50000000000000000000 A
BAT 36 CB 60000000000000000000 A
BAT 36 CB 80000000000000000000 A
BAT 36 CB 100000000000000000000 A
BAT 36 CB 125000000000000000000 A
BAT 36 CB 150000000000000000000 A
BAT 36 CB 200000000000000000000 A
BAT 36 CB 250000000000000000000 A
BAT 36 CB 300000000000000000000 A
BAT 36 CB 400000000000000000000 A
BAT 36 CB 500000000000000000000 A
BAT 36 CB 600000000000000000000 A
BAT 36 CB 800000000000000000000 A
BAT 36 CB 1000000000000000000000 A
BAT 36 CB 1250000000000000000000 A
BAT 36 CB 1500000000000000000000 A
BAT 36 CB 2000000000000000000000 A
BAT 36 CB 2500000000000000000000 A
BAT 36 CB 3000000000000000000000 A
BAT 36 CB 4000000000000000000000 A
BAT 36 CB 5000000000000000000000 A
BAT 36 CB 6000000000000000000000 A
BAT 36 CB 8000000000000000000000 A
BAT 36 CB 10000000000000000000000 A
BAT 36 CB 12500000000000000000000 A
BAT 36 CB 15000000000000000000000 A
BAT 36 CB 20000000000000000000000 A
BAT 36 CB 25000000000000000000000 A
BAT 36 CB 30000000000000000000000 A
BAT 36 CB 40000000000000000000000 A
BAT 36 CB 50000000000000000000000 A
BAT 36 CB 60000000000000000000000 A
BAT 36 CB 80000000000000000000000 A
BAT 36 CB 100000000000000000000000 A
BAT 36 CB 125000000000000000000000 A
BAT 36 CB 150000000000000000000000 A
BAT 36 CB 200000000000000000000000 A
BAT 36 CB 250000000000000000000000 A
BAT 36 CB 300000000000000000000000 A
BAT 36 CB 400000000000000000000000 A
BAT 36 CB 500000000000000000000000 A
BAT 36 CB 600000000000000000000000 A
BAT 36 CB 800000000000000000000000 A
BAT 36 CB 1000000000000000000000000 A
BAT 36 CB 1250000000000000000000000 A
BAT 36 CB 1500000000000000000000000 A
BAT 36 CB 2000000000000000000000000 A
BAT 36 CB 2500000000000000000000000 A
BAT 36 CB 3000000000000000000000000 A
BAT 36 CB 4000000000000000000000000 A
BAT 36 CB 5000000000000000000000000 A
BAT 36 CB 6000000000000000000000000 A
BAT 36 CB 8000000000000000000000000 A
BAT 36 CB 10000000000000000000000000 A
BAT 36 CB 12500000000000000000000000 A
BAT 36 CB 15000000000000000000000000 A
BAT 36 CB 20000000000000000000000000 A
BAT 36 CB 25000000000000000000000000 A
BAT 36 CB 30000000000000000000000000 A
BAT 36 CB 40000000000000000000000000 A
BAT 36 CB 50000000000000000000000000 A
BAT 36 CB 60000000000000000000000000 A
BAT 36 CB 80000000000000000000000000 A
BAT 36 CB 100000000000000000000000000 A
BAT 36 CB 125000000000000000000000000 A
BAT 36 CB 150000000000000000000000000 A
BAT 36 CB 200000000000000000000000000 A
BAT 36 CB 250000000000000000000000000 A
BAT 36 CB 300000000000000000000000000 A
BAT 36 CB 400000000000000000000000000 A
BAT 36 CB 500000000000000000000000000 A
BAT 36 CB 600000000000000000000000000 A
BAT 36 CB 800000000000000000000000000 A
BAT 36 CB 1000000000000000000000000000 A
BAT 36 CB 1250000000000000000000000000 A
BAT 36 CB 1500000000000000000000000000 A
BAT 36 CB 2000000000000000000000000000 A
BAT 36 CB 2500000000000000000000000000 A
BAT 36 CB 3000000000000000000000000000 A
BAT 36 CB 4000000000000000000000000000 A
BAT 36 CB 5000000000000000000000000000 A
BAT 36 CB 6000000000000000000000000000 A
BAT 36 CB 8000000000000000000000000000 A
BAT 36 CB 10000000000000000000000000000 A
BAT 36 CB 12500000000000000000000000000 A
BAT 36 CB 15000000000000000000000000000 A
BAT 36 CB 20000000000000000000000000000 A
BAT 36 CB 25000000000000000000000000000 A
BAT 36 CB 30000000000000000000000000000 A
BAT 36 CB 40000000000000000000000000000 A
BAT 36 CB 50000000000000000000000000000 A
BAT 36 CB 60000000000000000000000000000 A
BAT 36 CB 80000000000000000000000000000 A
BAT 36 CB 100000000000000000000000000000 A
BAT 36 CB 125000000000000000000000000000 A
BAT 36 CB 150000000000000000000000000000 A
BAT 36 CB 200000000000000000000000000000 A
BAT 36 CB 250000000000000000000000000000 A
BAT 36 CB 300000000000000000000000000000 A
BAT 36 CB 400000000000000000000000000000 A
BAT 36 CB 500000000000000000000000000000 A
BAT 36 CB 600000000000000000000000000000 A
BAT 36 CB 800000000000000000000000000000 A
BAT 36 CB 1000000000000000000000000000000 A
BAT 36 CB 1250000000000000000000000000000 A
BAT 36 CB 1500000000000000000000000000000 A
BAT 36 CB 2000000000000000000000000000000 A
BAT 36 CB 2500000000000000000000000000000 A
BAT 36 CB 3000000000000000000000000000000 A
BAT 36 CB 4000000000000000000000000000000 A
BAT 36 CB 5000000000000000000000000000000 A
BAT 36 CB 6000000000000000000000000000000 A
BAT 36 CB 8000000000000000000000000000000 A
BAT 36 CB 10000000000000000000000000000000 A
BAT 36 CB 12500000000000000000000000000000 A
BAT 36 CB 15000000000000000000000000000000 A
BAT 36 CB 20000000000000000000000000000000 A
BAT 36 CB 25000000000000000000000000000000 A
BAT 36 CB 30000000000000000000000000000000 A
BAT 36 CB 40000000000000000000000000000000 A
BAT 36 CB 50000000000000000000000000000000 A
BAT 36 CB 60000000000000000000000000000000 A
BAT 36 CB 80000000000000000000000000000000 A
BAT 36 CB 100000000000000000000000000000000 A
BAT 36 CB 125000000000000000000000000000000 A
BAT 36 CB 150000000000000000000000000000000 A
BAT 36 CB 200000000000000000000000000000000 A
BAT 36 CB 250000000000000000000000000000000 A
BAT 36 CB 300000000000000000000000000000000 A
BAT 36 CB 400000000000000000000000000000000 A
BAT 36 CB 500000000000000000000000000000000 A
BAT 36 CB 600000000000000000000000000000000 A
BAT 36 CB 800000000000000000000000000000000 A
BAT 36 CB 1000000000000000000000000000000000 A
BAT 36 CB 1250000000000000000000000000000000 A
BAT 36 CB 1500000000000000000000000000000000 A
BAT 36 CB 2000000000000000000000000000000000 A
BAT 36 CB 2500000000000000000000000000000000 A
BAT 36 CB 3000000000000000000000000000000000 A
BAT 36 CB 4000000000000000000000000000000000 A
BAT 36 CB 5000000000000000000000000000000000 A
BAT 36 CB 6000000000000000000000000000000000 A
BAT 36 CB 8000000000000000000000000000000000 A
BAT 36 CB 10000000000000000000000000000000000 A
BAT 36 CB 12500000000000000000000000000000000 A
BAT 36 CB 15000000000000000000000000000000000 A
BAT 36 CB 20000000000000000000000000000000000 A
BAT 36 CB 25000000000000000000000000000000000 A
BAT 36 CB 30000000000000000000000000000000000 A
BAT 36 CB 40000000000000000000000000000000000 A
BAT 36 CB 50000000000000000000000000000000000 A
BAT 36 CB 60000000000000000000000000000000000 A
BAT 36 CB 80000000000000000000000000000000000 A
BAT 36 CB 100000000000000000000000000000000000 A
BAT 36 CB 125000000000000000000000000000000000 A
BAT 36 CB 150000000000000000000000000000000000 A
BAT 36 CB 200000000000000000000000000000000000 A
BAT 36 CB 250000000000000000000000000000000000 A
BAT 36 CB 300000000000000000000000000000000000 A
BAT 36 CB 400000000000000000000000000000000000 A
BAT 36 CB 500000000000000000000000000000000000 A
BAT 36 CB 600000000000000000000000000000000000 A
BAT 36 CB 800000000000000000000000000000000000 A
BAT 36 CB 1000000000000000000000000000000000000 A
BAT 36 CB 1250000000000000000000000000000000000 A
BAT 36 CB 1500000000000000000000000000000000000 A
BAT 36 CB 2000000000000000000000000000000000000 A
BAT 36 CB 2500000000000000000000000000000000000 A
BAT 36 CB 3000000000000000000000000000000000000 A
BAT 36 CB 4000000000000000000000000000000000000 A
BAT 36 CB 5000000000000000000000000000000000000 A
BAT 36 CB 6000000000000000000000000000000000000 A
BAT 36 CB 8000000000000000000000000000000000000 A
BAT 36 CB 10000000000000000000000000000000000000 A
BAT 36 CB 12500000000000000000000000000000000000 A
BAT 36 CB 15000000000000000000000000000000000000 A
BAT 36 CB 20000000000000000000000000000000000000 A
BAT 36 CB 25000000000000000000000000000000000000 A
BAT 36 CB 30000000000000000000000000000000000000 A
BAT 36 CB 40000000000000000000000000000000000000 A
BAT 36 CB 50000000000000000000000000000000000000 A
BAT 36 CB 60000000000000000000000000000000000000 A
BAT 36 CB 80000000000000000000000000000000000000 A
BAT 36 CB 100000000000000000000000000000000000000 A
BAT 36 CB 125000000000000000000000000000000000000 A
BAT 36 CB 150000000000000000000000000000000000000 A
BAT 36 CB 200000000000000000000000000000000000000 A
BAT 36 CB 250000000000000000000000000000000000000 A
BAT 36 CB 300000000000000000000000000000000000000 A
BAT 36 CB 400000000000000000000000000000000000000 A
BAT 36 CB 500000000000000000000000000000000000000 A
BAT 36 CB 600000000000000000000000000000000000000 A
BAT 36 CB 800000000000000000000000000000000000000 A
BAT 36 CB 1000000000000000000000000000000000000000 A
BAT 36 CB 1250000000000000000000000000000000000000 A
BAT 36 CB 1500000000000000000000000000000000000000 A
BAT 36 CB 2000000000000000000000000000000000000000 A
BAT 36 CB 2500000000000000000000000000000000000000 A
BAT 36 CB 3000000000000000000000000000000000000000 A
BAT 36 CB 4000000000000000000000000000000000000000 A
BAT 36 CB 5000000000000000000000000000000000000000 A
BAT 36 CB 6000000000000000000000000000000000000000 A
BAT 36 CB 8000000000000000000000000000000000000000 A
BAT 36 CB 10000000000000000000000000000000000000000 A
BAT 36 CB 12500000000000000000000000000000000000000 A
BAT 36 CB 15000000000000000000000000000000000000000 A
BAT 36 CB 20000000000000000000000000000000000000000 A
BAT 36 CB 25000000000000000000000000000000000000000 A
BAT 36 CB 30000000000000000000000000000000000000000 A
BAT 36 CB 40000000000000000000000000000000000000000 A
BAT 36 CB 50000000000000000000000000000000000000000 A
BAT 36 CB 60000000000000000000000000000000000000000 A
BAT 36 CB 80000000000000000000000000000000000000000 A
BAT 36 CB 100000000000000000000000000000000000000000 A
BAT 36 CB 125000000000000000000000000000000000000000 A
BAT 36 CB 150000000000000000000000000000000000000000 A
BAT 36 CB 200000000000000000000000000000000000000000 A
BAT 36 CB 250000000000000000000000000000000000000000 A
BAT 36 CB 300000000000000000000000000000000000000000 A
BAT 36 CB 400000000000000000000000000000000000000000 A
BAT 36 CB 500000000000000000000000000000000000000000 A
BAT 36 CB 600000000000000000000000000000000000000000 A
BAT 36 CB 800000000000000000000000000000000000000000 A
BAT 36 CB 1000000000000000000000000000000000000000000 A
BAT 36 CB 1250000000000000000000000000000000000000000 A
BAT 36 CB 1500000000000000000000000000000000000000000 A
BAT 36 CB 2000000000000000000000000000000000000000000 A
BAT 36 CB 2500000000000000000000000000000000000000000 A
BAT 36 CB 3000000000000000000000000000000000000000000 A
BAT 36 CB 4000000000000000000000000000000000000000000 A
BAT 36 CB 5000000000000000000000000000000000000000000 A
BAT 36 CB 6000000000000000000000000000000000000000000 A
BAT 36 CB 8000000000000000000000000000000000000000000 A
BAT 36 CB 10000000000000000000000000000000000000000000 A
BAT 36 CB 12500000000000000000000000000000000000000000 A
BAT 36 CB 15000000000000000000000000000000000000000000 A
BAT 36 CB 20000000000000000000000000000000000000000000 A
BAT 36 CB 25000000000000000000000000000000000000000000 A
BAT 36 CB 30000000000000000000000000000000000000000000 A
BAT 36 CB 40000000000000000000000000000000000000000000 A
BAT 36 CB 50000000000000000000000000000000000000000000 A
BAT 36 CB 60000000000000000000000000000000000000000000 A
BAT 36 CB 80000000000000000000000000000000000000000000 A
BAT 36 CB 100000000000000000000000000000000000000000000 A
BAT 36 CB 125000000000000000000000000000000000000000000 A
BAT 36 CB 150000000000000000000000000000000000000000000 A
BAT 36 CB 200000000000000000000000000000000000000000000 A
BAT 36 CB 250000000000000000000000000000000000000000000 A
BAT 36 CB 300000000000000000000000000000000000000000000 A
BAT 36 CB 400000000000000000000000000000000000000000000 A
BAT 36 CB 500000000000000000000000000000000000000000000 A
BAT 36 CB 600000000000000000000000000000000000000000000 A
BAT 36 CB 800000000000000000000000000000000000000000000 A
BAT 36 CB 1000000000000000000000000000000000000000000000 A
BAT 36 CB 1250000000000000000000000000000000000000000000 A
BAT 36 CB 1500000000000000000000000000000000000000000000 A
BAT 36 CB 2000000000000000000000000000000000000000000000 A
BAT 36 CB 2500000000000000000000000000000000000000000000 A
BAT 36 CB 3000000000000000000000000000000000000000000000 A
BAT 36 CB 4000000000000000000000000000000000000000000000 A
BAT 36 CB 5000000000000000000000000000000000000000000000 A
BAT 36 CB 6000000000000000000000000000000000000000000000 A
BAT 36 CB 8000000000000000000000000000000000000000000000 A
BAT 36 CB 10000000000000000000000000000000000000000000000 A
BAT 36 CB 12500000000000000000000000000000000000000000000 A
BAT 36 CB 15000000000000000000000000000000000000000000000 A
BAT 36 CB 20000000000000000000000000000000000000000000000 A
BAT 36 CB 25000000000000000000000000000000000000000000000 A
BAT 36 CB 30000000000000000000000000000000000000000000000 A
BAT 36 CB 40000000000000000000000000000000000000000000000 A
BAT 36 CB 50000000000000000000000000000000000000000000000 A
BAT 36 CB 60000000000000000000000000000000000000000000000 A
BAT 36 CB 80000000000000000000000000000000000000000000000 A
BAT 36 CB 100000000000000000000000000000000000000000000000 A
BAT 36 CB 125000000000000000000000000000000000000000000000 A
BAT 36 CB 150000000000000000000000000000000000000000000000 A
BAT 36 CB 200000000000000000000000000000000000000000000000 A
BAT 36 CB 250000000000000000000000000000000000000000000000 A
BAT 36 CB 300000000000000000000000000000000000000000000000 A
BAT 36 CB 400000000000000000000000000000000000000000000000 A
BAT 36 CB 500000000000000000000000000000000000000000000000 A
BAT 36 CB 600000000000000000000000000000000000000000000000 A
BAT 36 CB 800000000000000000000000000000000000000000000000 A
BAT 36 CB 1000000000000000000000000000000000000000000000000 A
BAT 36 CB 1250000000000000000000000000000000000000000000000 A
BAT 36 CB 1500000000000000000000000000000000000000000000000 A
BAT 36 CB 2000000000000000000000000000000000000000000000000 A
BAT 36 CB 2500000000000000000000000000000000000000000000000 A
BAT 36 CB 3000000000000000000000000000000000000000000000000 A
BAT 36 CB 4000000000000000000000000000000000000000000000000 A
BAT 36 CB 5000000000000000000000000000000000000000000000000 A
BAT 36 CB 6000000000000000000000000000000000000000000000000 A
BAT 36 CB 8000000000000000000000000000000000000000000000000 A
BAT 36 CB 10000000000000000000000000000000000000000000000000 A
BAT 36 CB 12500000000000000000000000000000000000000000000000 A
BAT 36 CB 15000000000000000000000000000000000000000000000000 A
BAT 36 CB 20000000000000000000000000000000000000000000000000 A
BAT 36 CB 25000000000000000000000000000000000000000000000000 A
BAT 36 CB 30000000000000000000000000000000000000000000000000 A
BAT 36 CB 40000000000000000000000000000000000000000000000000 A
BAT 36 CB 50000000000000000000000000000000000000000000000000 A
BAT 36 CB 60000000000000000000000000000000000000000000000000 A
BAT 36 CB 80000000000000000000000000000000000000000000000000 A
BAT 36 CB 100000000000000000000000000000000000000000000000000 A
BAT 36 CB 125000000000000000000000000000000000000000000000000 A
BAT 36 CB 150000000000000000000000000000000000000000000000000 A
BAT 36 CB 200000000000000000000000000000000000000000000000000 A
BAT 36 CB 250000000000000000000000000000000000000000000000000 A
BAT 36 CB 300000000000000000000000000000000000000000000000000 A
BAT 36 CB 400000000000000000000000000000000000000000000000000 A
BAT 36 CB 500000000000000000000000000000000000000000000000000 A
BAT 36 CB 600000000000000000000000000000000000000000000000000 A
BAT 36 CB 800000000000000000000000000000000000000000000000000 A
BAT 36 CB 1000000000000000000000000000000000000000000000000000 A
BAT 36 CB 1250000000000000000000000000000000000000000000000000 A
BAT 36 CB 1500000000000000000000000000000000000000000000000000 A
BAT 36 CB 2000000000000000000000000000000000000000000000000000 A
BAT 36 CB 2500000000000000000000000000000000000000000000000000 A
BAT 36 CB 3000000000000000000000000000000000000000000000000000 A
BAT 36 CB 4000000000000000000000000000000000000000000000000000 A
BAT 36 CB 5000000000000000000000000000000000000000000000000000 A
BAT 36 CB 6000000000000000000000000000000000000000000000000000 A
BAT 36 CB 8000000000000000000000000000000000000000000000000000 A
BAT 36 CB 10000000000000000000000000000000000000000000000000000 A
BAT 36 CB 12500000000000000000000000000000000000000000000000000 A
BAT 36 CB 15000000000000000000000000000000000000000000000000000 A
BAT 36 CB 20000000000000000000000000000000000000000000000000000 A
BAT 36 CB 25000000000000000000000000000000000000000000000000000 A
BAT 36 CB 30000000000000000000000000000000000000000000000000000 A
BAT 36 CB 40000000000000000000000000000000000000000000000000000 A
BAT 36 CB 50000000000000000000000000000000000000000000000000000 A
BAT 36 CB 60000000000000000000000000000000000000000000000000000 A
BAT 36 CB 80000000000000000000000000000000000000000000000000000 A
BAT 36 CB 100000000000000000000000000000000000000000000000000000 A
BAT 36 CB 125000000000000000000000000000000000000000000000000000 A
BAT 36 CB 150000000000000000000000000000000000000000000000000000 A
BAT 36 CB 200000000000000000000000000000000000000000000000000000 A
BAT 36 CB 250000000000000000000000000000000000000000000000000000 A
BAT 36 CB 300000000000000000000000000000000000000000000000000000 A
BAT 36 CB 400000000000000000000000000000000000000000000000000000 A
BAT 36 CB 500000000000000000000000000000000000000000000000000000 A
BAT 36 CB 600000000000000000000000000000000000000000000000000000 A
BAT 36 CB 800000000000000000000000000000000000000000000000000000 A
BAT 36 CB 1000000000000000000000000000000000000000000000000000000 A
BAT 36 CB 1250000000000000000000000000000000000000000000000000000 A
BAT 36 CB 1500000000000000000000000000000000000000000000000000000 A
BAT 36 CB 2000000000000000000000000000000000000000000000000000000 A
BAT 36 CB 2500000000000000000000000000000000000000000000000000000 A
BAT 36 CB 3000000000000000000000000000000000000000000000000000000 A
BAT 36 CB 4000000000000000000000000000000000000000000000000000000 A
BAT 36 CB 5000000000000000000000000000000000000000000000000000000 A
BAT 36 CB 6000000000000000000000000000000000000000000000000000000 A
BAT 36 CB 8000000000000000000000000000000000000000000000000000000 A
BAT 36 CB 10000000000000000000000000000000000000000000000000000000 A
BAT 36 CB 12500000000000000000000000000000000000000000000000000000 A
BAT 36 CB 15000000000000000000000000000000000000000000000000000000 A
BAT 36 CB 20000000000000000000000000000000000000000000000000000000 A
BAT 36 CB 25000000000000000000000000000000000000000000000000000000 A
BAT 36 CB 30000000000000000000000000000000000000000000000000000000 A
BAT 36 CB 40000000000000000000000000000000000000000000000000000000 A
BAT 36 CB 50000000000000000000000000000000000000000000000000000000 A
BAT 36 CB 60000000000000000000000000000000000000000000000000000000 A
BAT 36 CB 80000000000000000000000000000000000000000000000000000000 A
BAT 36 CB 100000000000000000000000000000000000000000000000000000000 A
BAT 36 CB 125000000000000000000000000000000000000000000000000000000 A
BAT 36 CB 150000000000000000000000000000000000000000000000000000000 A
BAT 36 CB 200000000000000000000000000000000000000000000000000000000 A
BAT 36 CB 250000000000000000000000000000000000000000000000000000000 A
BAT 36 CB 300000000000000000000000000000000000000000000000000000000 A
BAT 36 CB 400000000000000000000000000000000000000000000000000000000 A
BAT 36 CB 500000000000000000000000000000000000000000000000000000000 A
BAT 36 CB 600000000000000000000000000000000000000000000000000000000 A
BAT 36 CB 800000000000000000000000000000000000000000000000000000000 A
BAT 36 CB 1000000000000000000000000000000000000000000000000000000000 A
BAT 36 CB 1250000000000000000000000000000000000000000000000000000000 A
BAT 36 CB 1500000000000000000000000000000000000000000000000000000000 A
BAT 36 CB 2000000000000000000000000000000000000000000000000000000000 A
BAT 36 CB 2500000000000000000000000000000000000000000000000000000000 A
BAT 36 CB 3000000000000000000000000000000000000000000000000000000000 A
BAT 36 CB 4000000000000000000000000000000000000000000000000000000000 A
BAT 36 CB 5000000000000000000000000000000000000000000000000000000000 A
BAT 36 CB 6000000000000000000000000000000000000000000000000000000000 A
BAT 36 CB 8000000000000000000000000000000000000000000000000000000000 A
BAT 36 CB 10000000000000000000000000000000000000000000000000000000000 A
BAT 36 CB 12500000000000000000000000000000000000000000000000000000000 A
BAT 36 CB 15000000000000000000000000000000000000000000000000000000000 A
BAT 36 CB 20000000000000000000000000000000000000000000000000000000000 A
BAT 36 CB 25000000000000000000000000000000000000000000000000000000000 A
BAT 36 CB 30000000000000000000000000000000000000000000000000000000000 A
BAT 36 CB 40000000000000000000000000000000000000000000000000000000000 A
BAT 36 CB 50000000000000000000000000000000000000000000000000000000000 A
BAT 36 CB 60000000000000000000000000000000000000000000000000000000000 A
BAT 36 CB 80000000000000000000000000000000000000000000000000000000000 A
BAT 36 CB 100000000000000000000000000000000000000000000000000000000000 A
BAT 36 CB 125000000000000000000000000000000000000000000000000000000000 A
BAT 36 CB 150000000000000000000000000000000000000000000000000000000000 A
BAT 36 CB 200000000000000000000000000000000000000000000000000000000000 A
BAT 36 CB 250000000000000000000000000000000000000000000000000000000000 A
BAT 36 CB 300000000000000000000000000000000000000000000000000000000000 A
BAT 36 CB 400000000000000000000000000000000000000000000000000000000000 A
BAT 36 CB 500000000000000000000000000000000000000000000000000000000000 A
BAT 36 CB 600000000000000000000000000000000000000000000000000000000000 A
BAT 36 CB 800000000000000000000000000000000000000000000000000000000000 A
BAT 36 CB 1000000000000000000000000000000000000000000000000000000000000 A
BAT 36 CB 1250000000000000000000000000000000000000000000000000000000000 A
BAT 36 CB 1500000000000000000000000000000000000000000000000000000000000 A
BAT 36 CB 2000000000000000000000000000000000000000000000000000000000000 A
BAT 36 CB 2500000000000000000000000000000000000000000000000000000000000 A
BAT 36 CB 3000000000000000000000000000000000000000000000000000000000000 A
BAT 36 CB 4000000000000000000000000000000000000000000000000000000000000 A
BAT 36 CB 5000000000000000000000000000000000000000000000000000000000000 A
BAT 36 CB 6000000000000000000000000000000000000000000000000000000000000 A
BAT 36 CB 8000000000000000000000000000000000000000000000000000000000000 A
BAT 36 CB 10000000000000000000000000000000000000000000000000000000000000 A
BAT 36 CB 12500000000000000000000000000000000000000000000000000000000000 A
BAT 36 CB 15000000000000000000000000000000000000000000000000000000000000 A
BAT 36 CB 20000000000000000000000000000000000000000000000000000000000000 A
BAT 36 CB 25000000000000000000000000000000000000000000000000000000000000 A
BAT 36 CB 30000000000000000000000000000000000000000000000000000000000000 A
BAT 36 CB 40000000000000000000000000000000000000000000000000000000000000 A
BAT 36 CB 50000000000000000000000000000000000000000000000000000000000000 A
BAT 36 CB 60000000000000000000000000000000000000000000000000000000000000 A
BAT 36 CB 80000000000000000000000000000000000000000000000000000000000000 A
BAT 36 CB 100000000000000000000000000000000000000000000000000000000000000 A
BAT 36 CB 125000000000000000000000000000000000000000000000000000000000000 A
BAT 36 CB 150000000000000000000000000000000000000000000000000000000000000 A
BAT 36 CB 200000000000000000000000000000000000000000000000000000000000000 A
BAT 36 CB 250000000000000000000000000000000000000000000000000000000000000 A
BAT 36 CB 300000000000000000000000000000000000000000000000000000000000000 A
BAT 36 CB 400000000000000000000000000000000000000000000000000000000000000 A
BAT 36 CB 500000000000000000000000000000000000000000000000000000000000000 A
BAT 36 CB 600000000000000000000000000000000000000000000000000000000000000 A
BAT 36 CB 800000000000000000000000000000000000000000000000000000000000000 A
BAT 36 CB 1000000000000000000000000000000000000000000000000000000000000000 A
BAT 36 CB 1250000000000000000000000000000000000000000000000000000000000000 A
BAT 36 CB 1500000000000000000000000000000000000000000000000000000000000000 A
BAT 36 CB 2000000000000000000000000000000000000000000000000000000000000000 A
BAT 36 CB 2500000000000000000000000000000000000000000000000000000000000000 A
BAT 36 CB 3000000000000000000000000000000000000000000000000000000000000000 A
BAT 36 CB 4000000000000000000000000000000000000000000000000000000000000000 A
BAT 36 CB 5000000000000000000000000000000000000000000000000000000000000000 A
BAT 36 CB 6000000000000000000000000000000000000000000000000000000000000000 A
BAT 36 CB 8000000000000000000000000000000000000000000000000000000000000000 A
BAT 36 CB 10000000000000000000000000000000000000000000000000000000000000000 A
BAT 36 CB 12500000000000000000000000000000000000000000000000000000000000000 A
BAT 36 CB 15000000000000000000000000000000000000000000000000000000000000000 A
BAT 36 CB 20000000000000000000000000000000000000000000000000000000000000000 A
BAT 36 CB 25000000000000000000000000000000000000000000000000000000000000000 A
BAT 36 CB 30000000000000000000000000000000000000000000000000000000000000000 A
BAT 36 CB 40000000000000000000000000000000000000000000000000000000000000000 A
BAT 36 CB 50000000000000000000000000000000000000000000000000000000000000000 A
BAT 36 CB 60000000000000000000000000000000000000000000000000000000000000000 A
BAT 36 CB 80000000000000000000000000000000000000000000000000000000000000000 A
BAT 36 CB 100000000000000000000000000000000000000000000000000000000000000000 A
BAT 36 CB 125000000000000000000000000000000000000000000000000000000000000000 A
BAT 36 CB 150000000000000000000000000000000000000000000000000000000000000000 A
BAT 36 CB 200000000000000000000000000000000000000000000000000000000000000000 A
BAT 36 CB 250000000000000000000000000000000000000000000000000000000000000000 A
BAT 36 CB 300000000000000000000000000000000000000000000000000000000000000000 A
BAT 36 CB 400000000000000000000000000000000000000000000000000000000000000000 A
BAT 36 CB 500000000000000000000000000000000000000000000000000000000000000000 A
BAT 36 CB 600000000000000000000000000000000000000000000000000000000000000000 A
BAT 36 CB 800000000000000000000000000000000000000000000000000000000000000000 A
BAT 36 CB 1000000000000000000000000000000000000000000000000000000000000000000 A
BAT 36 CB 1250000000000000000000000000000000000000000000000000000000000000000 A
BAT 36 CB 1500000000000000000000000000000000000000000000000000000000000000000 A
BAT 36 CB 2000000000000000000000000000000000000000000000000000000000000000000 A
BAT 36 CB 2500000000000000000000000000000000000000000000000000000000000000000 A
BAT 36 CB 3000000000000000000000000000000000000000000000000000000000000000000 A
BAT 36 CB 4000000000000000000000000000000000000000000000000000000000000000000 A
BAT 36 CB 5000000000000000000000000000000000000000000000000000000000000000000 A
BAT 36 CB 6000000000000000000000000000000000000000000000000000000000000000000 A
BAT 36 CB 8000000000000000000000000000000000000000000000000000000000000000000 A
BAT 36 CB 10000000000000000000000000000000000000000000000000000000000000000000 A
BAT 36 CB 12500000000000000000000000000000000000000000000000000000000000000000 A
BAT 36 CB 15000000000000000000000000000000000000000000000000000000000000000000 A
BAT 36 CB 20000000000000000000000000000000000000000000000000000000000000000000 A
BAT 36 CB

Vehicle

JUMPER

Data

New

Domain

Protections And Doors

Function

Alarm

Function Diagram

Principle

Synopsis

Wiring

Installation

9C- 06/10/2013

SVG Viewer

Tools

History

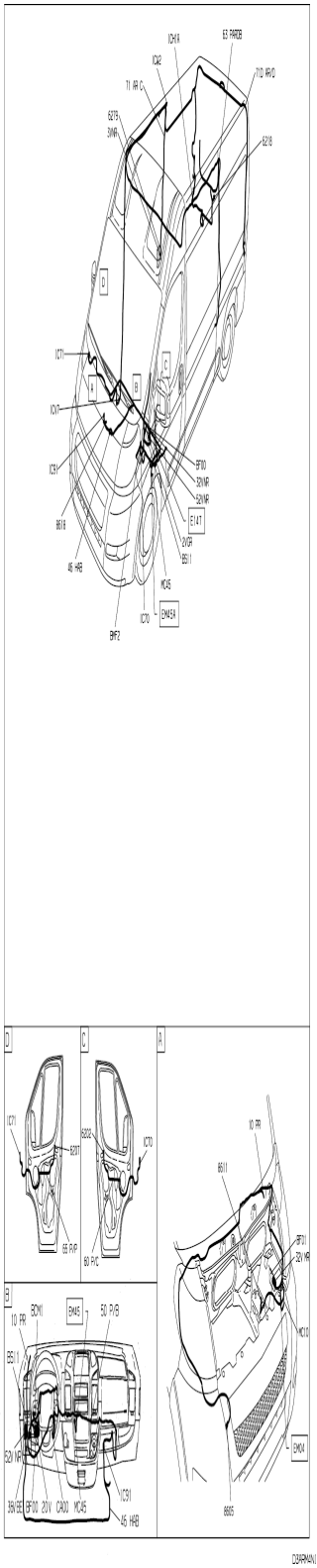

DIAGRAM(1)

vehicle : RELAY III		OPR : 12937717	
domain	protections and doors	function	alarm
component			

principle

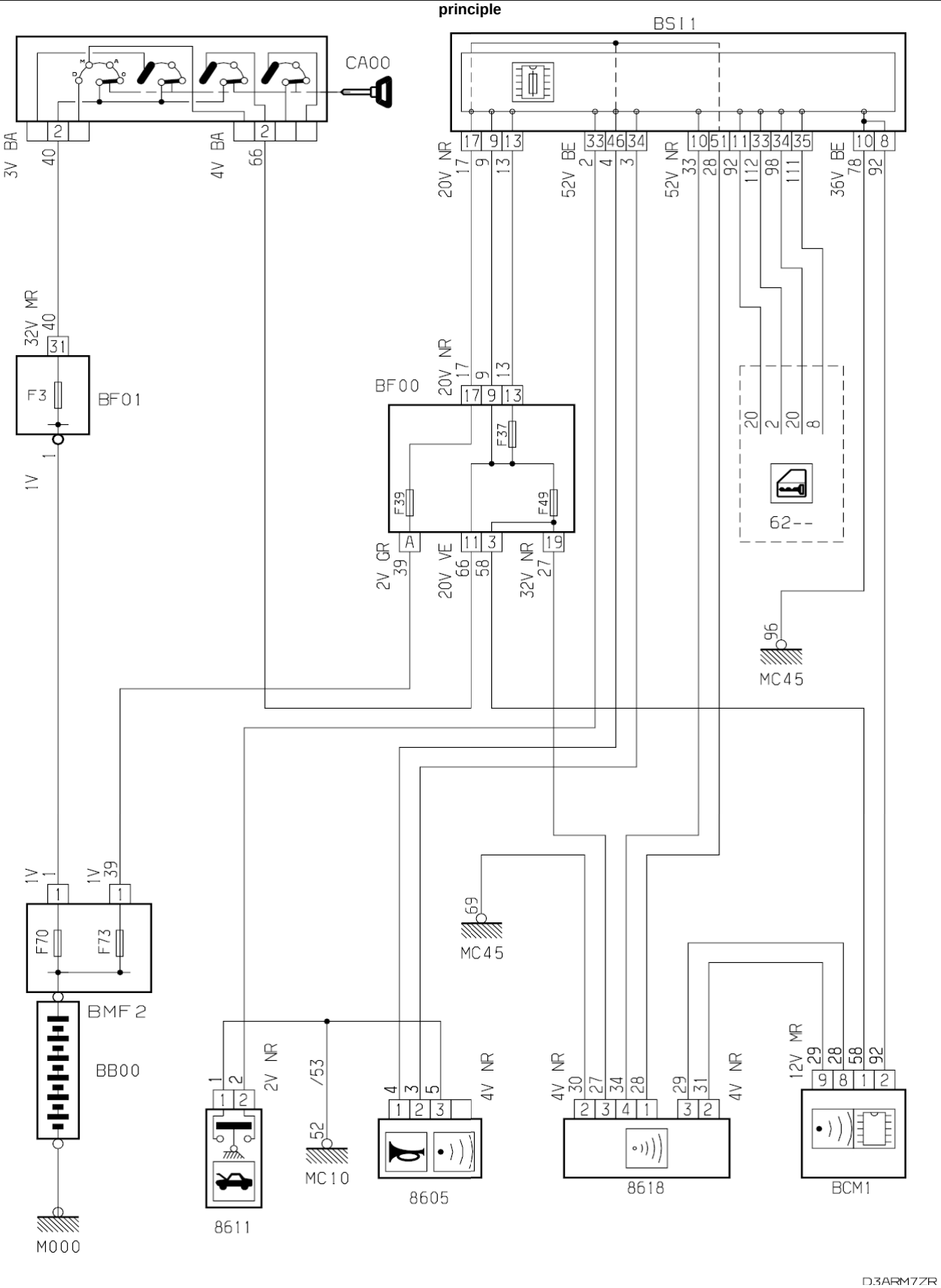

D3ARM7ZR

wiring

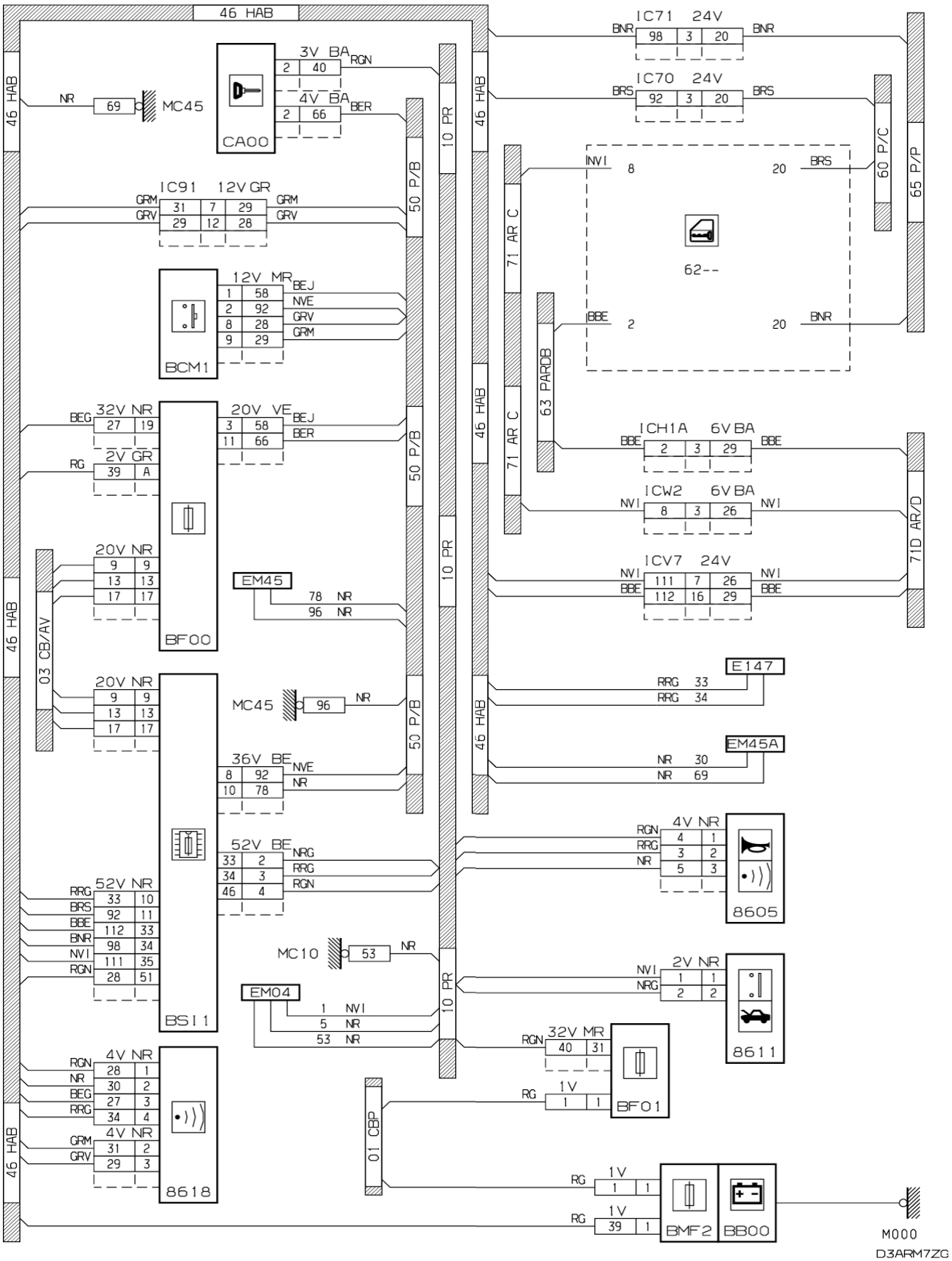
46 HAB
IC71 24V
IC70 24V
3V BA
4V BA
CA00
MC45
IC91 12V GR
12V MR
BCM1
32V NR
2V GR
20V VE
BF00
EM45
MC45
36V BE
52V BE
52V NR
BSI1
MC10
EM04
4V NR
8618
50 P/B
10 PR
71 AR C
63 PARDB
60 P/C
65 P/P
62--
ICH1A 6V BA
ICW2 6V BA
ICV7 24V
71D AR/D
E147
EM45A
8605
8611
32V MR
BF01
01 CBP
BMF2
BB00
M000
D3ARM7ZG

null

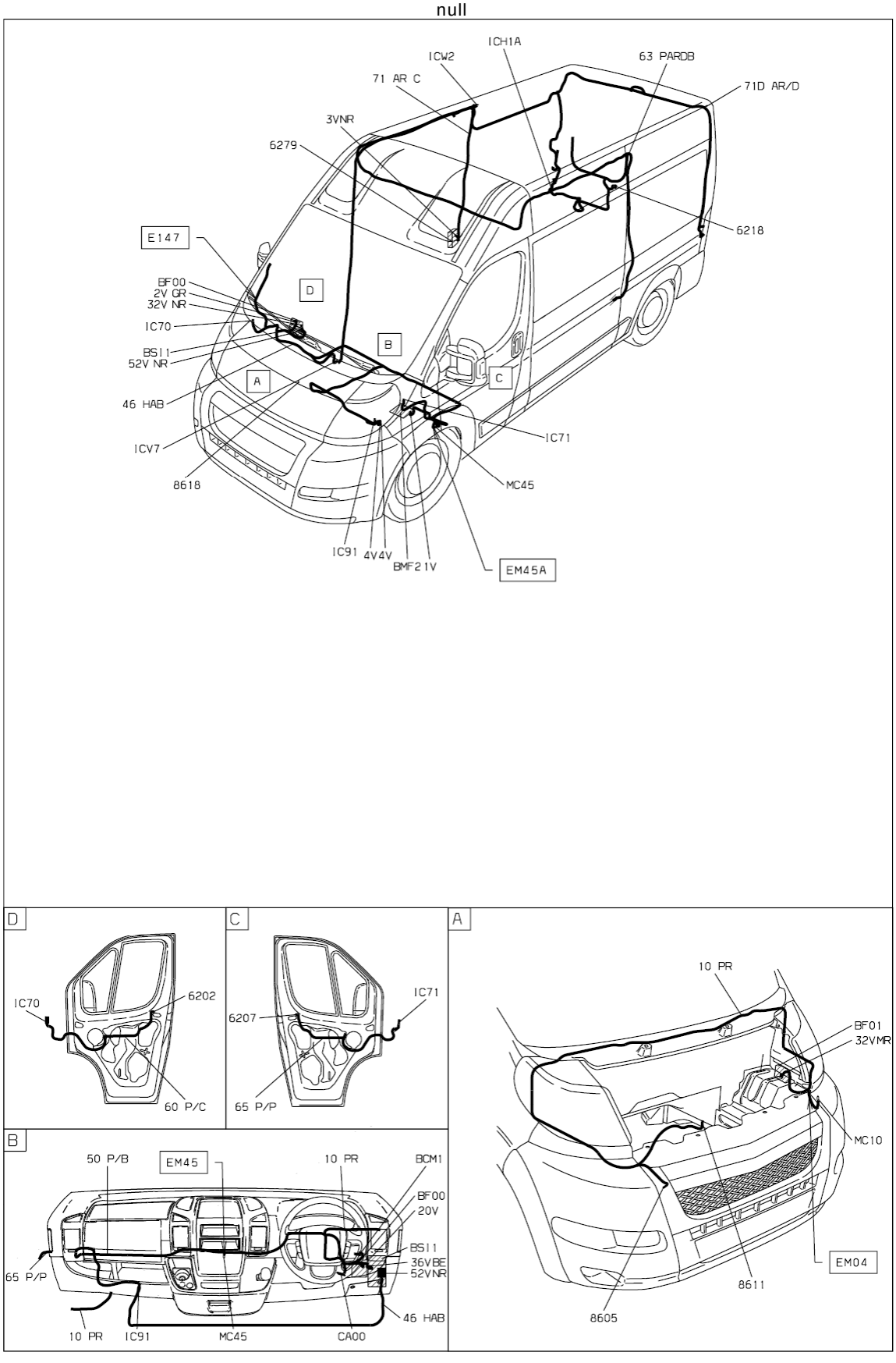

D3ARM7ZI

property of PSA Peugeot Citroën

23/12/2015

Vehicle

JUMPER
Data
New

Domain

General Points

Function

Allocation Of PSF0 Fuses

Function Diagram

General

9C- 06/10/2013

SVG Viewer
Tools
History

U9PSF002	ALLOCATION OF PSF0 FUSES

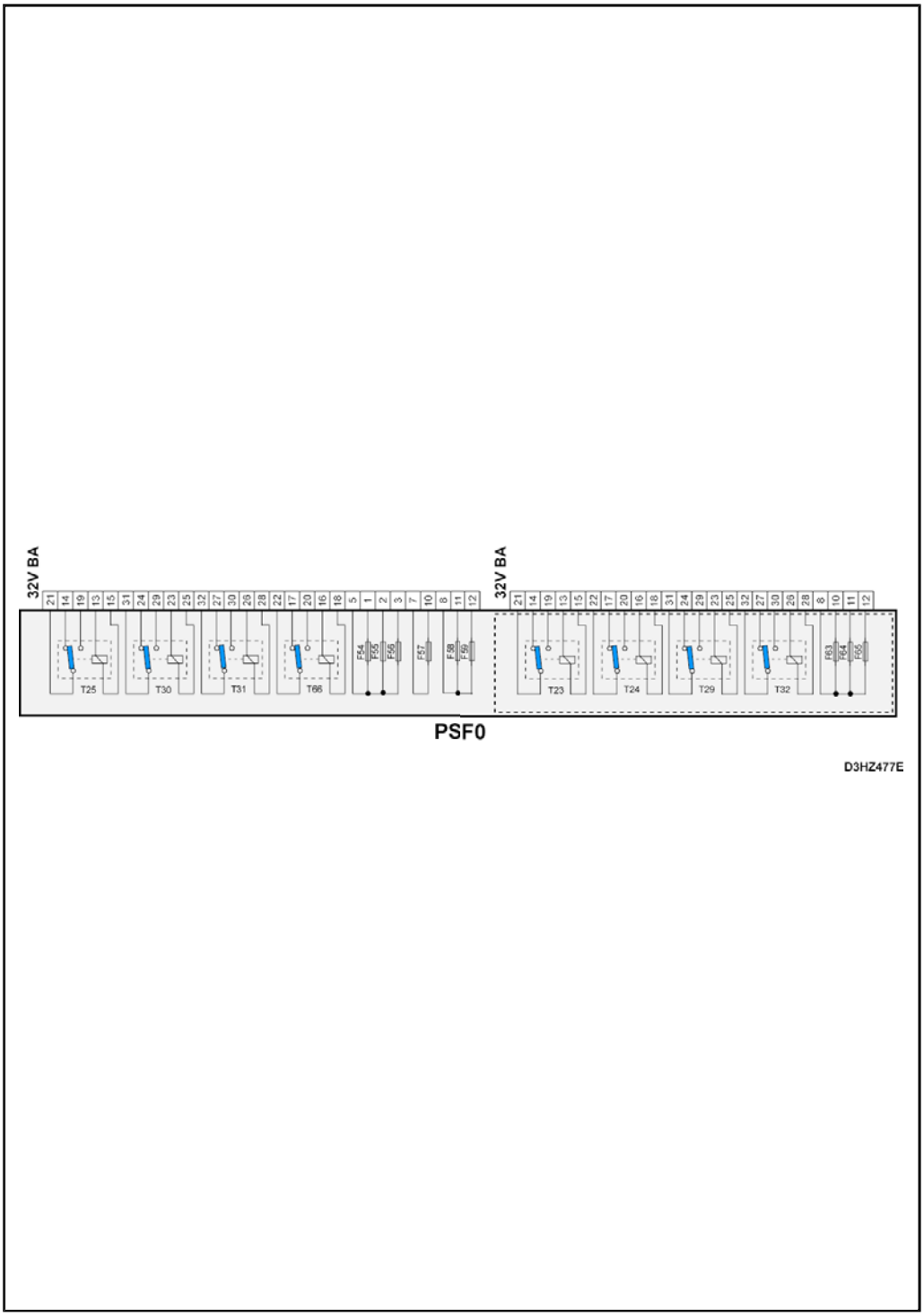

fig. U9PSF0PR

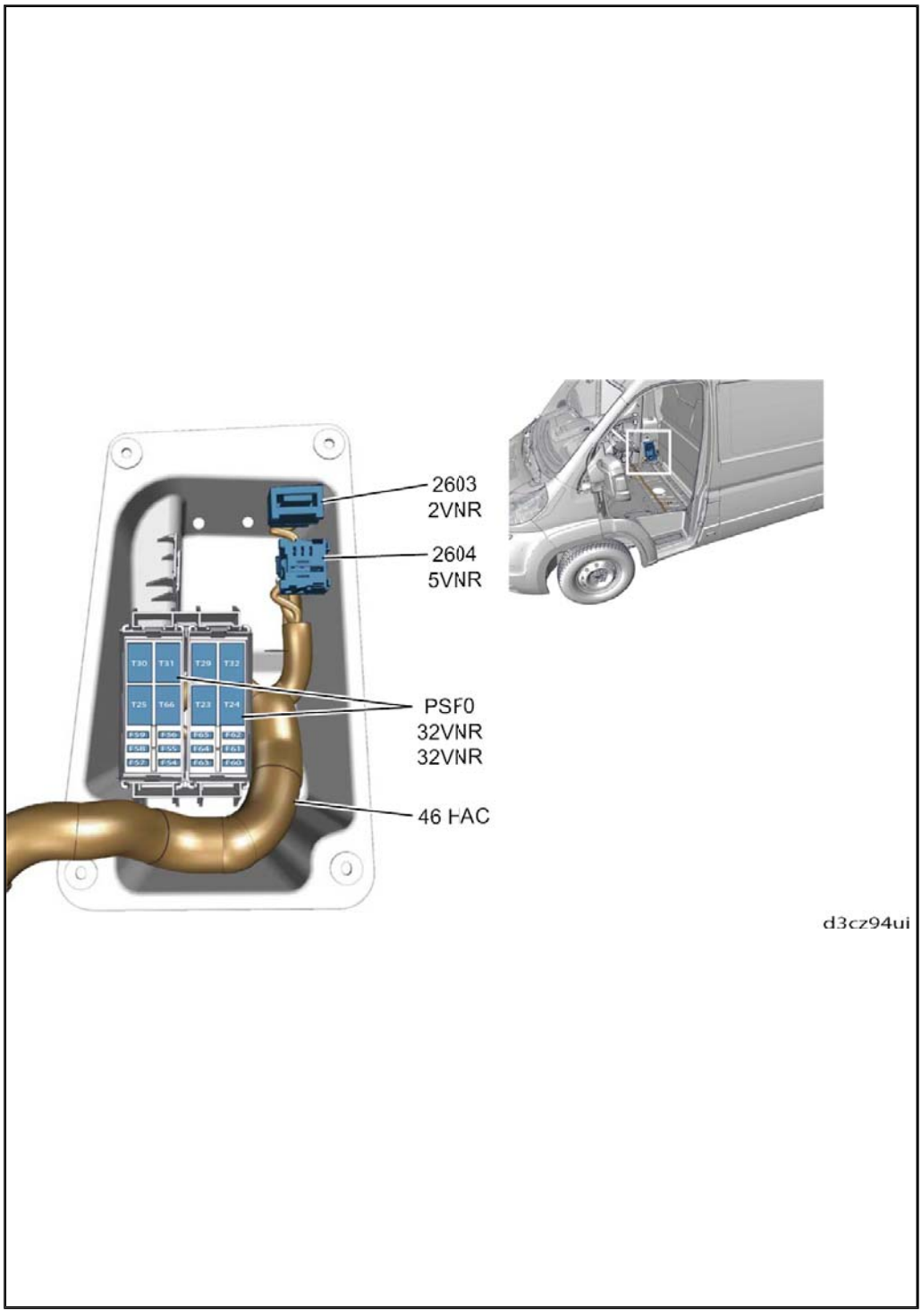

fig. D3CZ94UI

allocation of PSF0 fuses			
fuse	A	supply	matching
T25	-	-	Minibus interior lighting
T30	-	-	heated screens
T31	-	-	

T66	-	-	heated seats
T23	-	-	rear additional heating/air conditioning
T24	-	-	rear additional heating/air conditioning
T29	-	-	rear additional heating/air conditioning
T32	-	-	not used
F54	15A	+BATT	minibus ventilation
F55	15A	+BATT	heated seats
F56	15A	+BATT	prise 12 v arriere
F57	10A	+BATT	under-seat heating, rear additional heating/air conditioning
F58	15A	+BATT	LH heated rear screen
F59	15A	+BATT	RH heated rear screen
F60	-	+BATT	libre
F61	-	+BATT	libre
F62	-	+BATT	libre
F63	10A	+BATT	rear additional heating/air conditioning
F64	-	+BATT	libre
F65	30A	+BATT	rear additional heating/air conditioning

Vehicle

JUMPER
Data
New

Domain

General Points

Function

Allocation Of PSF0 Fuses

Function Diagram

General

9C- 06/10/2013

SVG Viewer
Tools
History

U9PSF001	ALLOCATION OF PSF0 FUSES

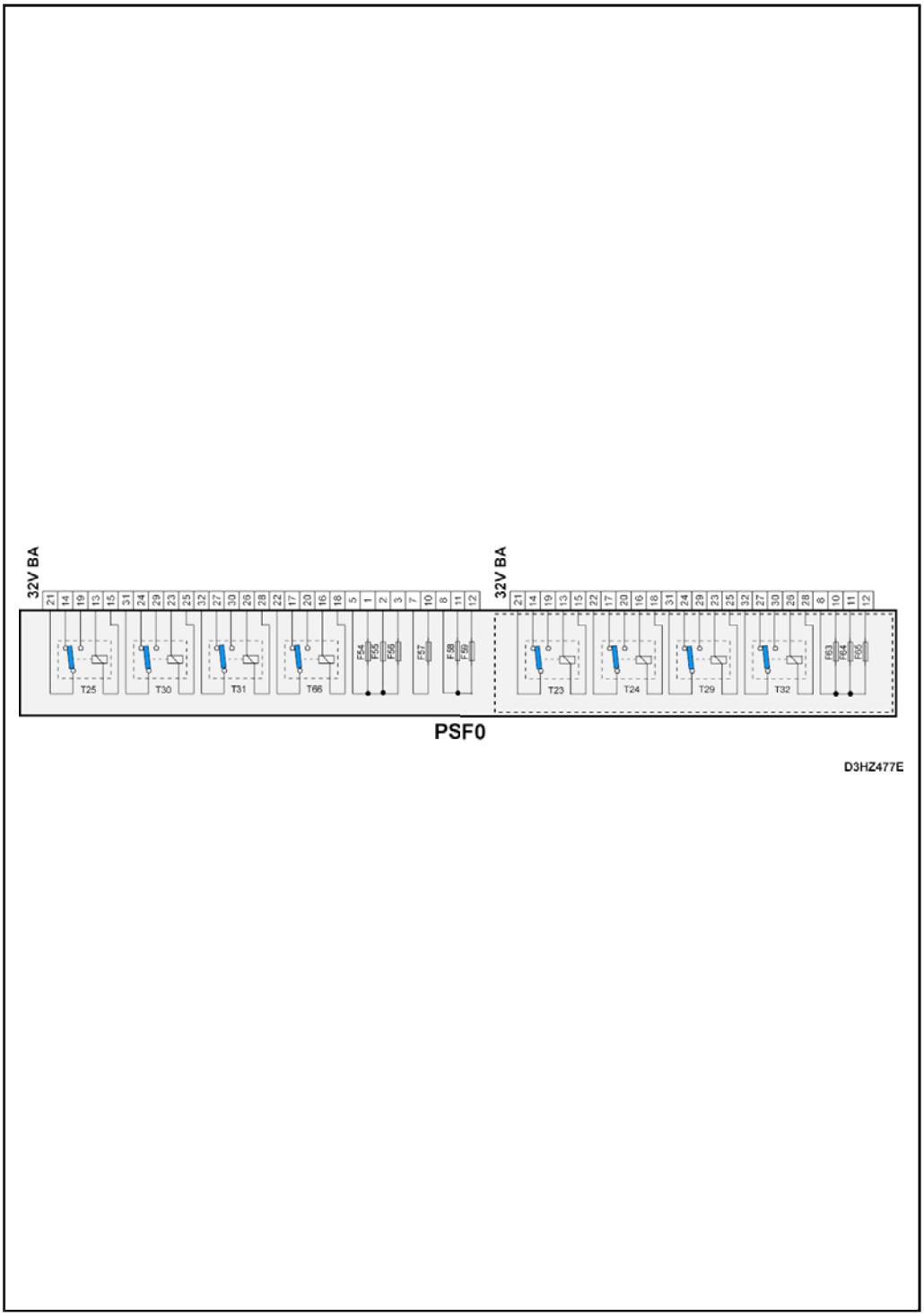

fig. U9PSF0PR

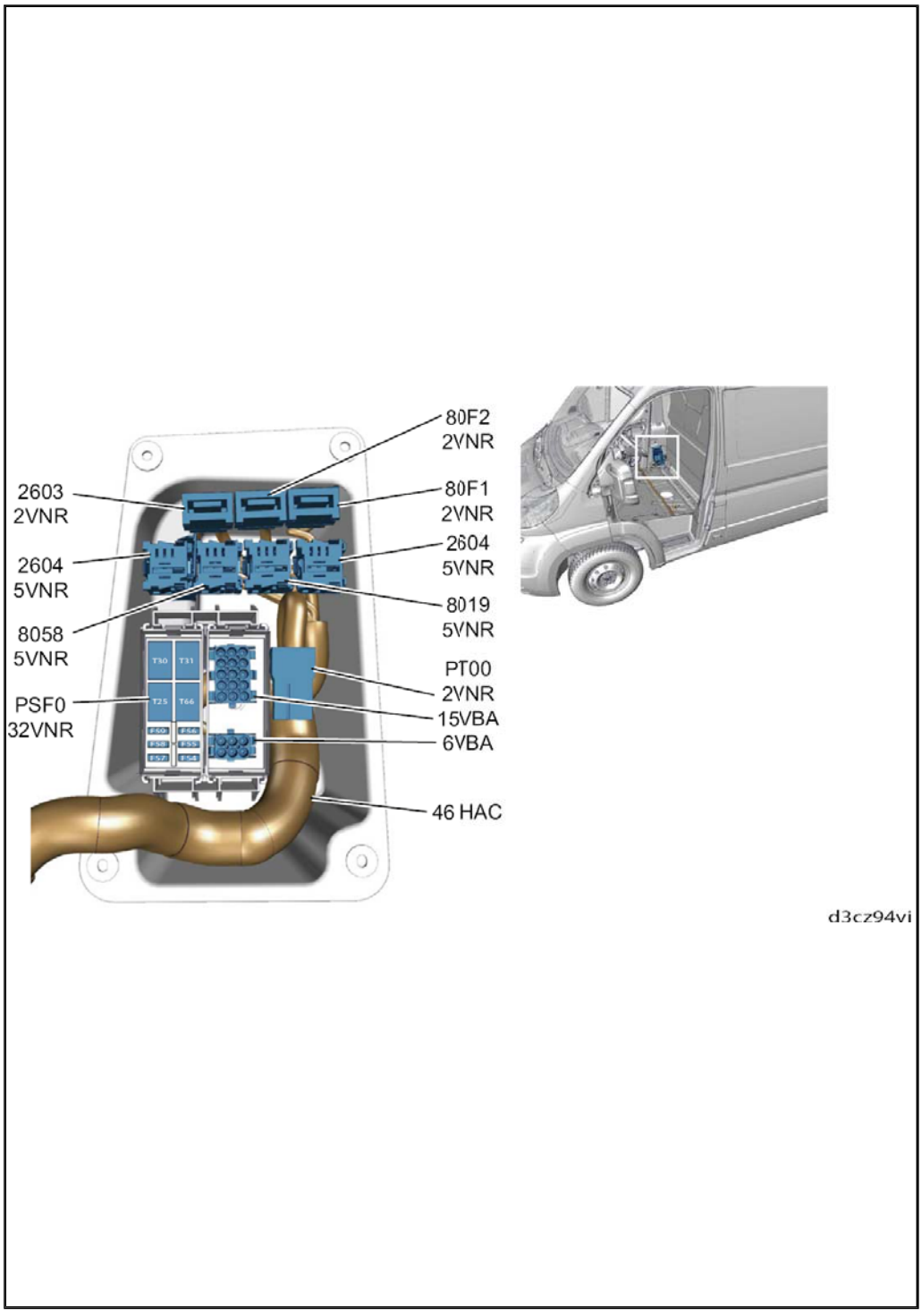

fig. D3CZ94VI

allocation of PSF0 fuses			
fuse	A	supply	matching
T25	-	-	Minibus interior lighting
T30	-	-	heated screens
T31	-	-	under-seat heating, rear additional heating/air conditioning

T66	-	-	heated seats
F54	15A	+BATT	minibus ventilation
F55	15A	+BATT	heated seats
F56	15A	+BATT	prise 12 v arriere
F57	10A	+BATT	under-seat heating, rear additional heating/air conditioning
F58	15A	+BATT	LH heated rear screen
F59	15A	+BATT	RH heated rear screen

Vehicle

JUMPER

Data

New

Domain

Comfort And Convenience

Function

Audio System

Function Diagram

Principle

Synopsis

Wiring

Installation

9C- 06/10/2013

SVG Viewer

Tools

History

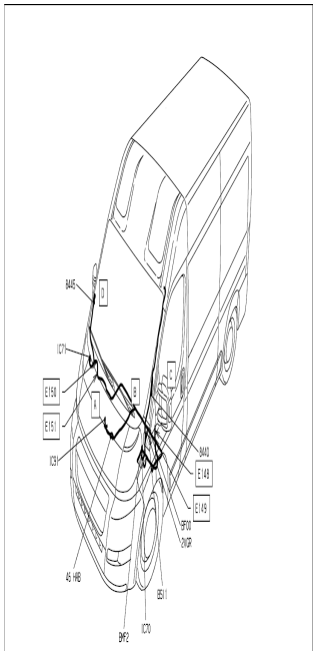
BA45
C1
IC71
E158
E151
IC51
BA43
E149
E145
BF00
2WGP
45 HAB
BS51
IC70
BH2

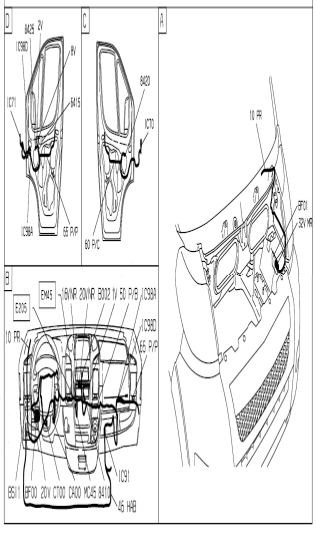
D
BA25 2V
IC58D
4V
IC71
BA15
IC58A
65 PVP
C
BA20
IC70
60 PVC
A
10 PP
BF01
22V HR
B
EM43
E2205
10 PP
16NVR 20NVR EB02 1V 50 PVB IC58A
IC58D
65 PVP
BS51
BF00 20V CT00 CA00 HC45 BA13
IC51
45 HAB

D0WPAMX1

Vehicle

JUMPER

Data

New

Domain

Comfort And Convenience

Function

Audio System

Function Diagram

Principle

Synopsis

Wiring

Installation

9C- 06/10/2013

SVG Viewer

Tools

History

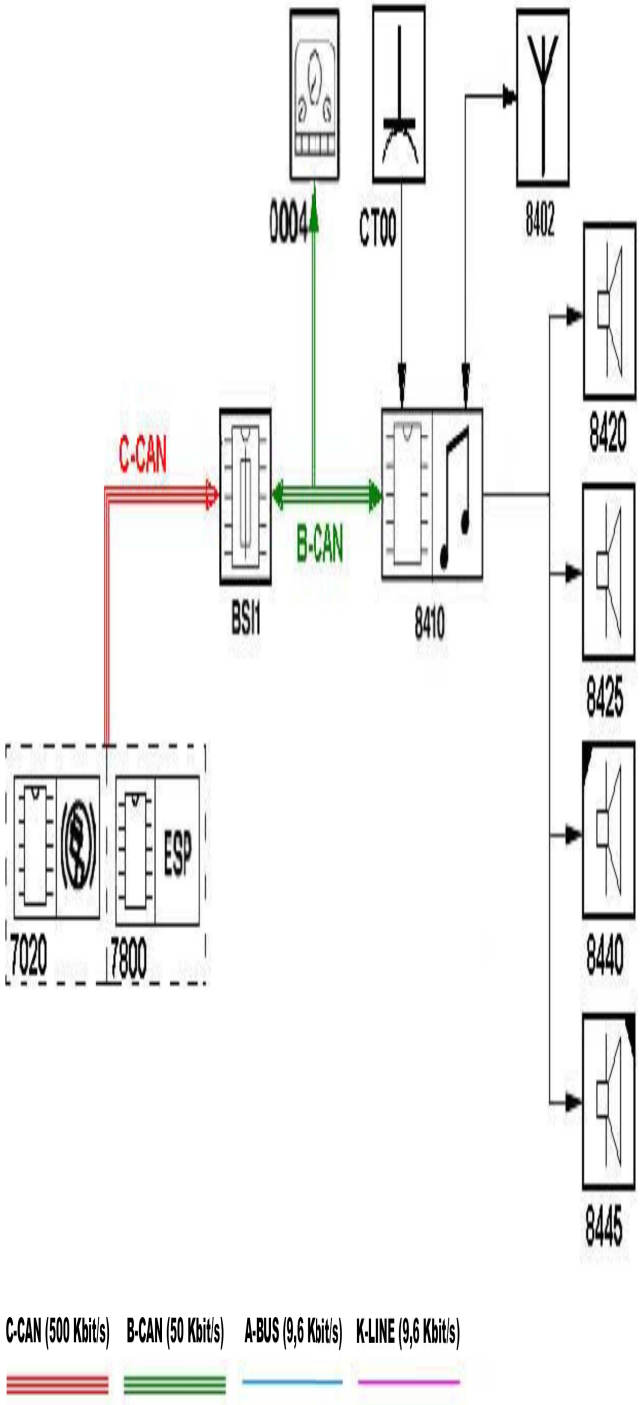
0004
CT00
8402
8420
C-CAN
B-CAN
BSI1
8410
8425
8440
8445
ESP
7020
7800
C-CAN (500 Kbit/s)
B-CAN (50 Kbit/s)
A-BUS (9,6 Kbit/s)
K-LINE (9,6 Kbit/s)

Vehicle

JUMPER

Data

New

Domain

Comfort And Convenience

Function

Audio System

Function Diagram

Principle

Synopsis

Wiring

Installation

9C- 06/10/2013

SVG Viewer

Tools

History

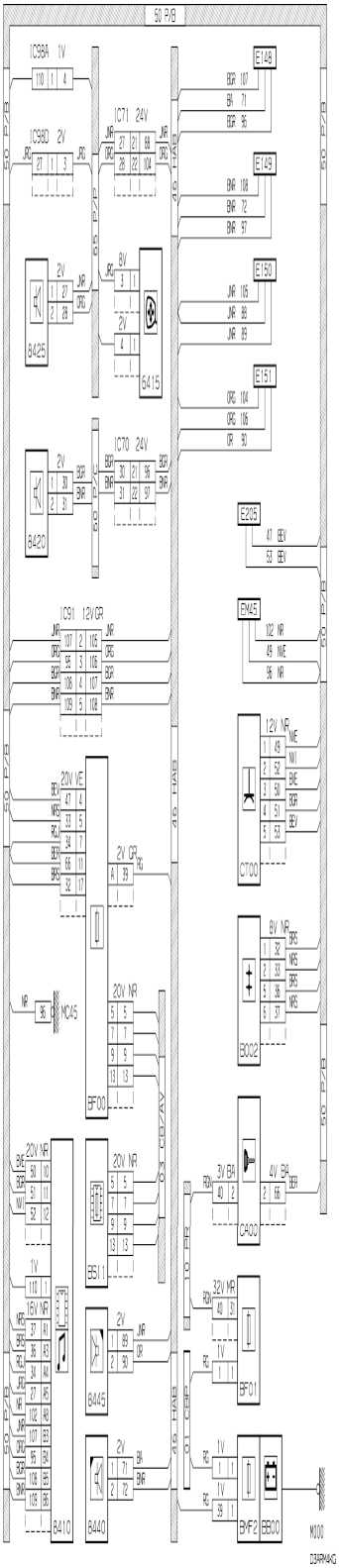
50 P/B
IC98A 1V
IC98D 2V
IC71 24V
IC70 24V
IC91 12V GR
E148
E149
E150
E151
E205
EM45
8425
8415
8420
CT00
B002
MC45
BF00
BS11
CA00
BF01
8445
8410
8440
BMF2
BB00
M000
D3ARMAG

Vehicle

JUMPER

Data

New

Domain

Comfort And Convenience

Function

Audio System

Function Diagram

Principle

Synopsis

Wiring

Installation

9C- 06/10/2013

SVG Viewer

Tools

History

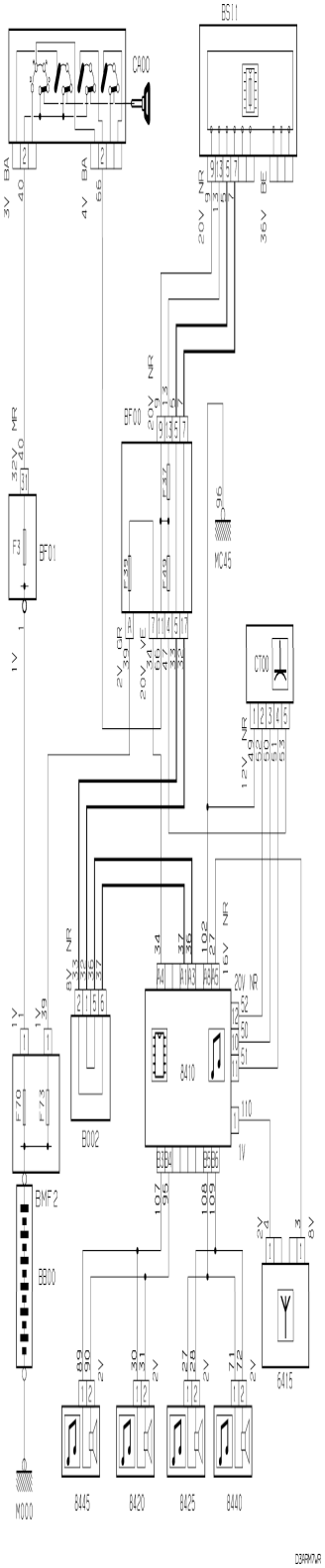
BS11
C900
BF00
BF01
MC45
CT00
B002
8410
BMF2
BB00
6415
M000
8445
8420
8425
8440

Vehicle

JUMPER

Data

New

Domain

Lighting - Signalling

Function

Dipped Beam / Main Beam Headlamps

Function Diagram

Principle

Wiring

Installation

9C- 06/10/2013

SVG Viewer

Tools

History

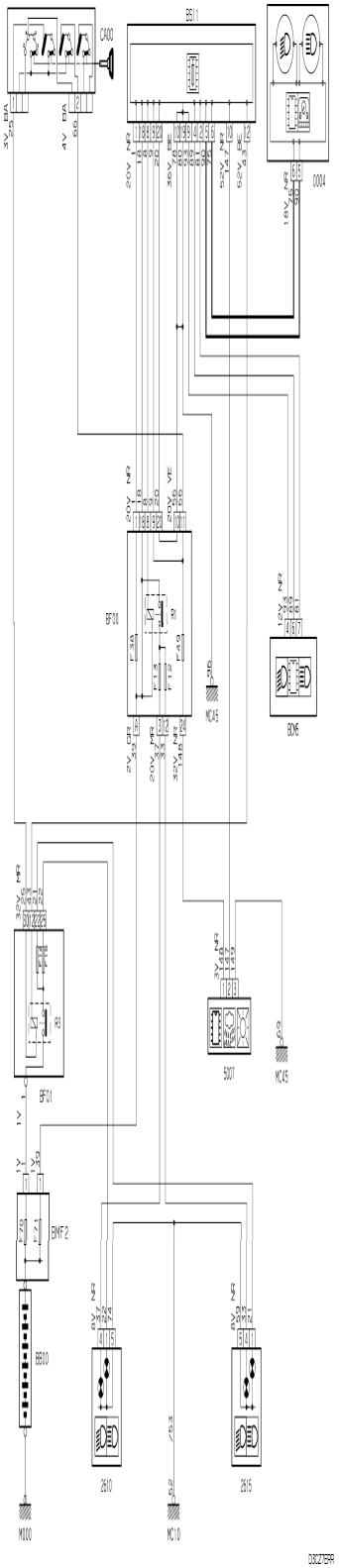
CA00
BS11
0004
BF00
MC45
BD06
BF01
BMF2
BB00
M100
MC10
2610
2615
D3027E9A

Vehicle

JUMPER

Data

New

Domain

Driver Information

Function

Brake Information

Function Diagram

Principle

Wiring

Installation

9C- 06/10/2013

SVG Viewer

Tools

History

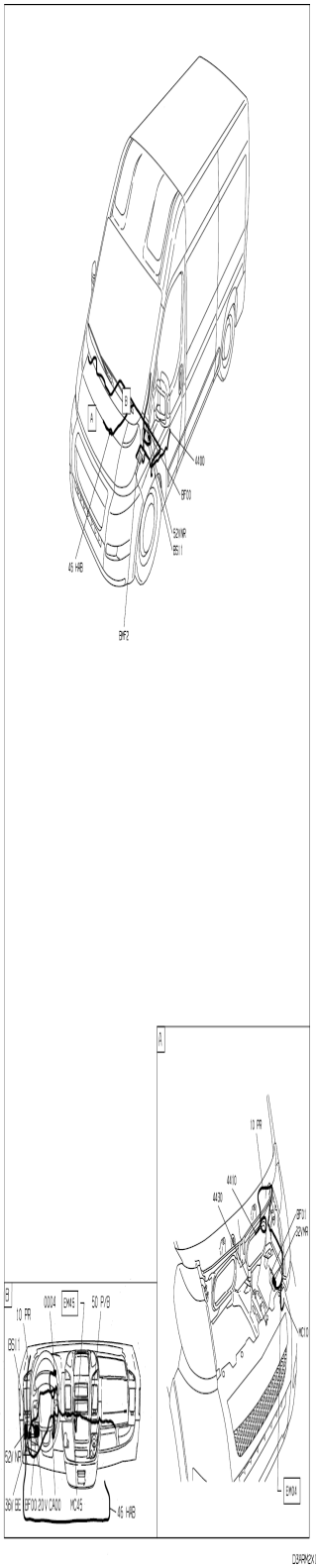
A
4400
BF00
52VNR
BS11
45 HRB
BHF2
A
10 PR
4410
4430
BF01
22VNR
MC10
EM04
B
10 PR
0004
EM45
50 PVB
BS11
52VNR
36V GE
BF00 20V CA00
MC45
45 HRB

D3ARM2K1

Vehicle

JUMPER

Data

New

Domain

Driver Information

Function

Brake Information

Function Diagram

Principle

Wiring

Installation

9C- 06/10/2013

SVG Viewer

Tools

History

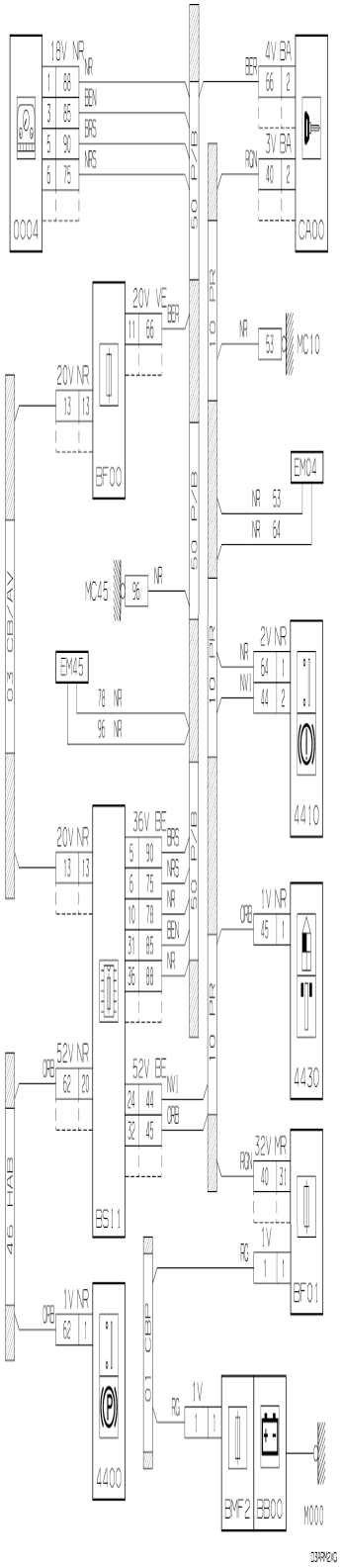
0004
18V NR
NR
BEN
BRS
NRS
CA00
4V BA
BER
3V BA
RGN
50 P/B
10 PR
BF00
20V VE
BER
20V NR
MC10
EM04
NR 53
NR 64
MC45
96 NR
EM45
78 NR
96 NR
03 CB/AV
4410
2V NR
NR
NW1
4430
1V NR
ORB
BS11
36V BE
BRS
NRS
NR
BEN
NR
52V NR
ORB
52V BE
NW1
ORB
46 HAB
BF01
32V MR
RGN
1V
RG
4400
1V NR
ORB
01 CBP
1V
RG
BMF2
BB00
M000
D3ARM2XG

vehicle : RELAY III		OPR : 12937717	
domain	driver information	function	brake information
component			

principle

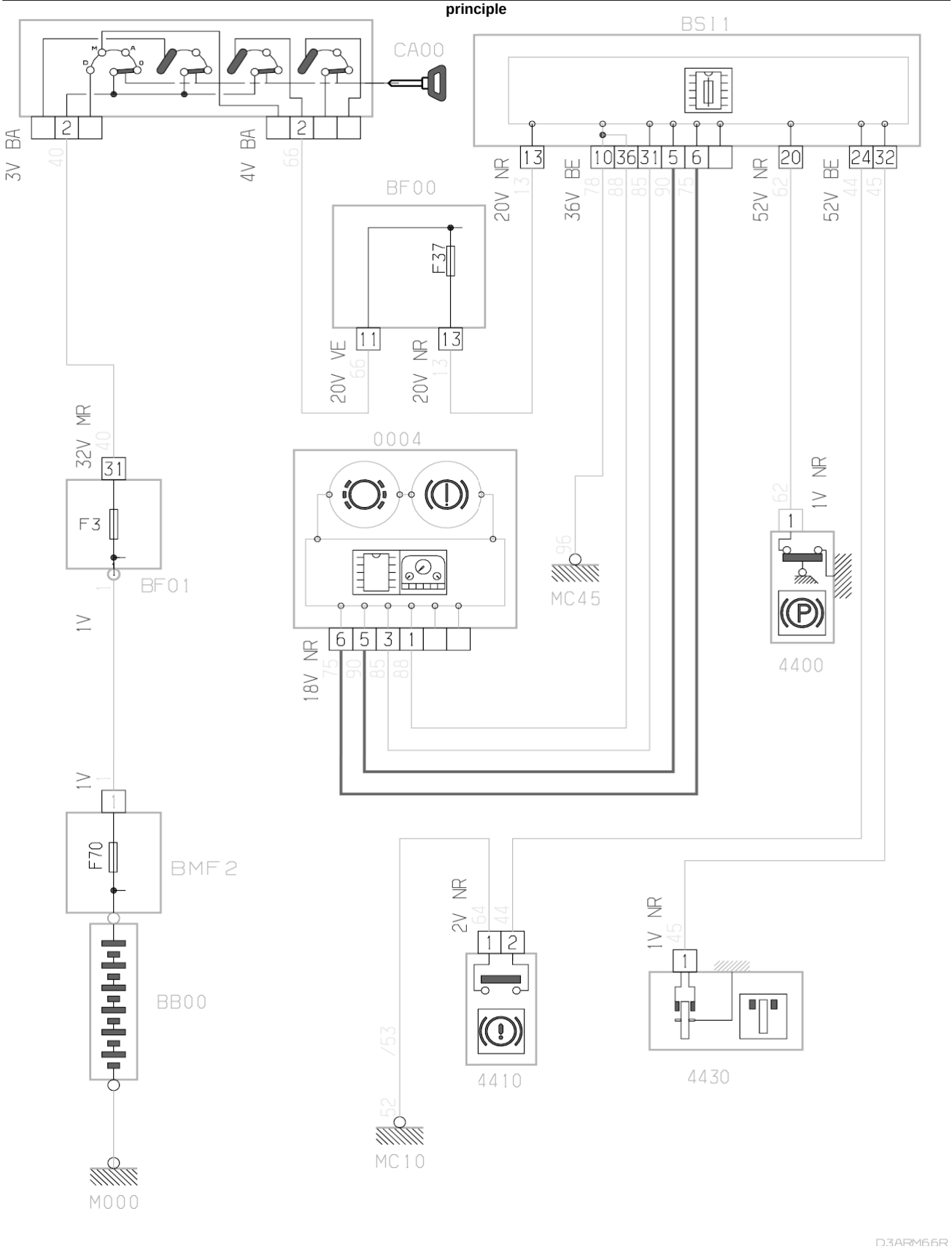

wiring

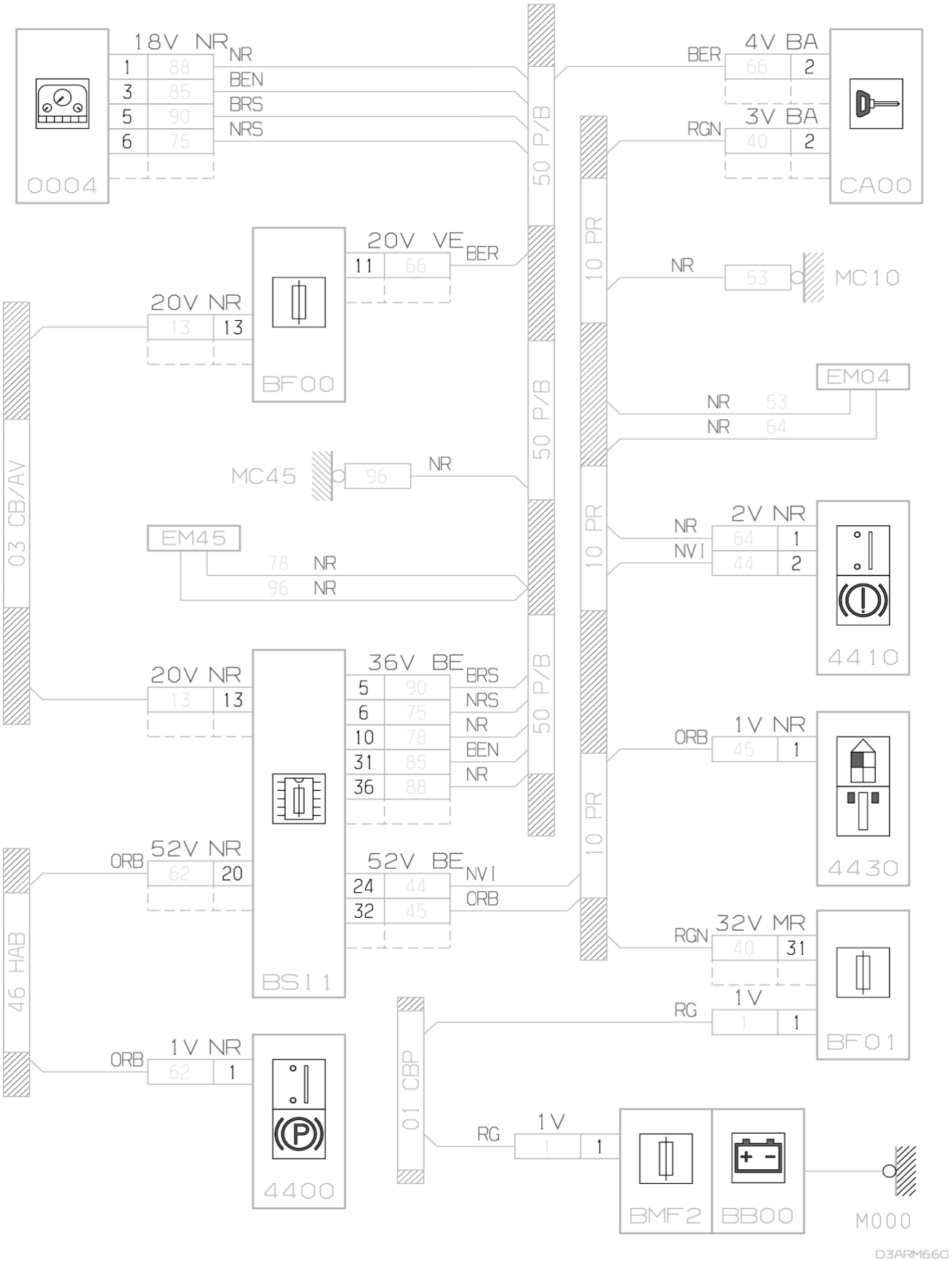
0004
18V NR
1 88 NR
3 85 BEN
5 90 BRS
6 75 NRS
50 P/B
BER 4V BA 66 2
RGN 3V BA 40 2
CA00
10 PR
NR 53 MC10
EM04
NR 53
NR 64
BF00
20V VE 11 66 BER
20V NR 13 13
03 CB/AV
MC45 96 NR
EM45
78 NR
96 NR
NR 2V NR 64 1
NVI 44 2
4410
BSI1
20V NR 13 13
36V BE
5 90 BRS
6 75 NRS
10 78 NR
31 85 BEN
36 88 NR
ORB 1V NR 45 1
4430
46 HAB
ORB 52V NR 62 20
52V BE
24 44 NVI
32 45 ORB
RGN 32V MR 40 31
RG 1V 1 1
BF01
01 CBP
ORB 1V NR 62 1
4400
RG 1V 1 1
BMF2
BB00
M000
D3ARM66G

null

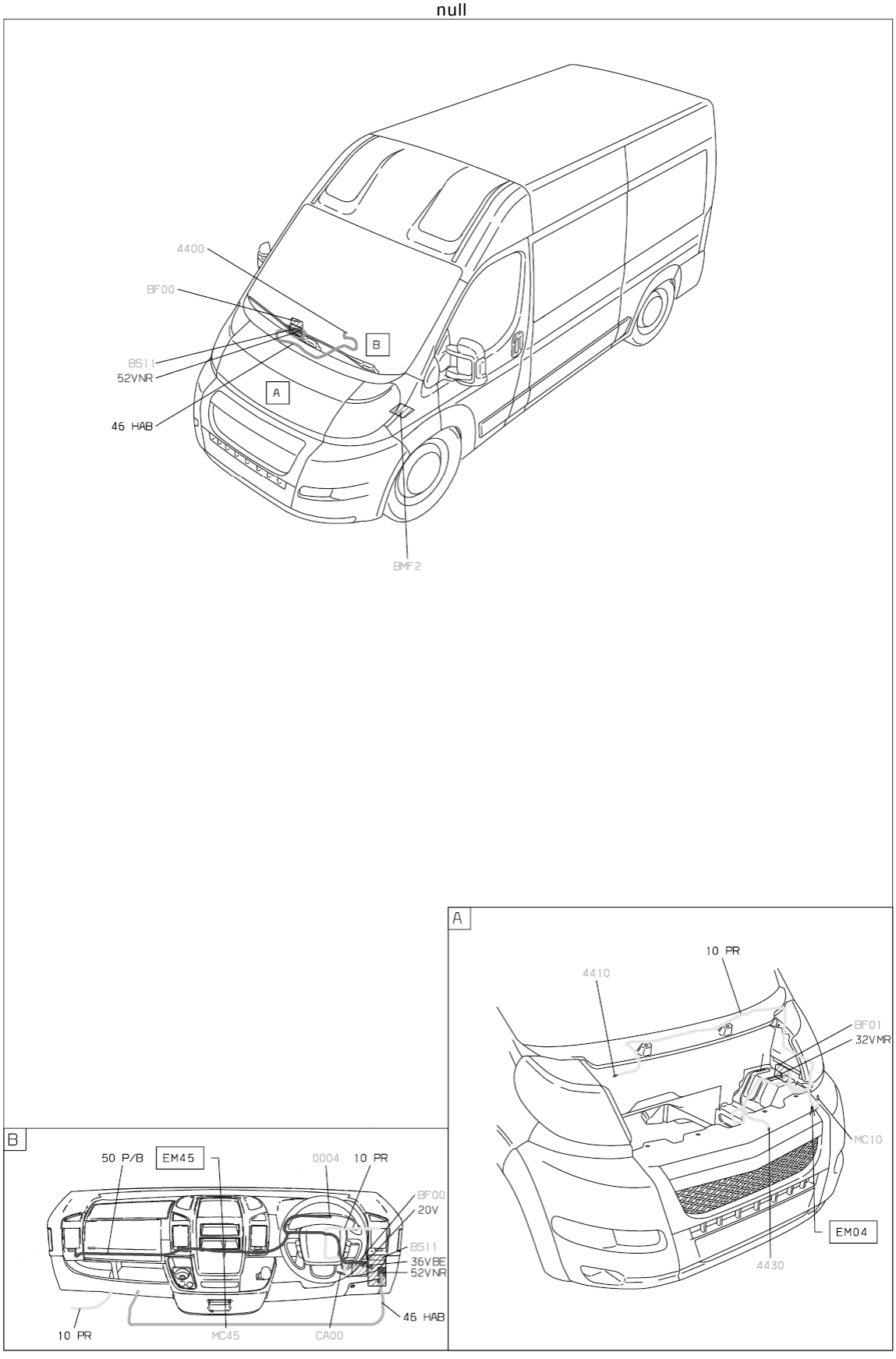

D3ARM66I

property of PSA Peugeot Citroën

23/12/2015

Vehicle

JUMPER

Data

New

Domain

Lighting - Signalling

Function

Brake Lamps

Function Diagram

Principle

Wiring

Installation

9C- 06/10/2013

SVG Viewer

Tools

History

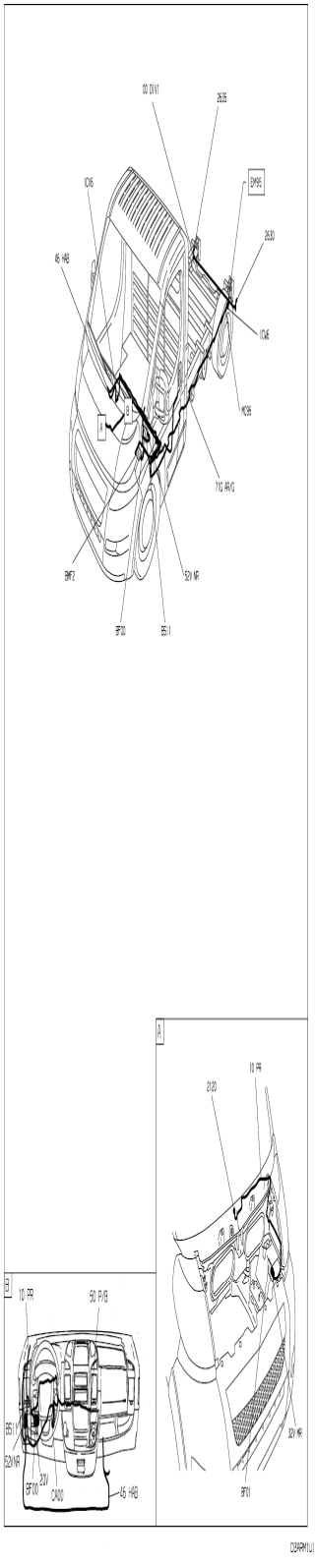
00 DIV1
2635
BM95
2630
1C45
45 HAB
1C45
1C95
71G ARVG
BMF2
52V MR
BF00
BS11
A
10 PR
2120
32V MR
BF01
B
10 PR
50 PVB
BS11
52V MR
20V
BF00
CA00
45 HAB

DIAGRAM1U1

Vehicle

JUMPER

Data

New

Domain

Lighting - Signalling

Function

Brake Lamps

Function Diagram

Principle

Wiring

Installation

9C- 06/10/2013

SVG Viewer

Tools

History

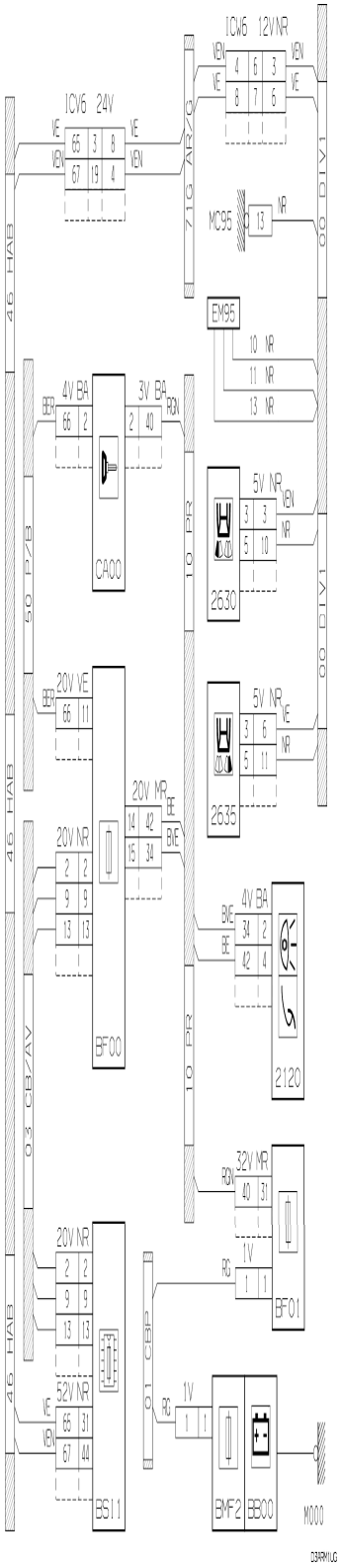
ICV6 24V
ICW6 12V NR
MC95
EM95
4V BA
3V BA
CA00
5V NR
2630
20V VE
20V MR
20V NR
BF00
2635
4V BA
2120
32V NR
1V
BF01
52V NR
BS11
BMF2
BB00
M000
46 HAB
50 P/B
03 CB/AV
10 PR
01 CBP
00 DIV1
D3ARM1LG

Vehicle

JUMPER

Data

New

Domain

Lighting - Signalling

Function

Brake Lamps

Function Diagram

Principle

Wiring

Installation

9C- 06/10/2013

SVG Viewer

Tools

History

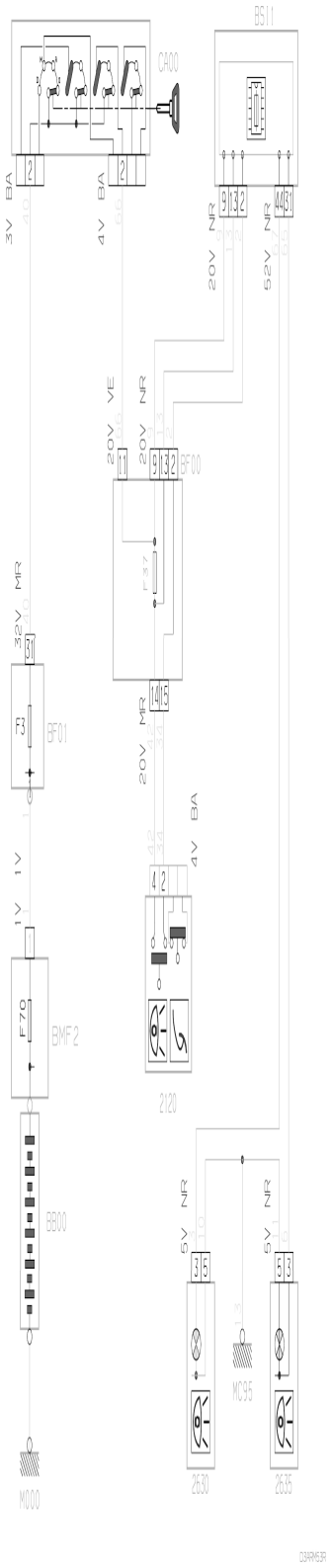
BS11
CA00
3V BA
4V BA
20V NR
52V NR
20V VE
20V NR
BF00
F37
32V MR
F3
BF01
20V MR
4V BA
1V
1V
F70
BMF2
2120
BB00
5V NR
5V NR
MC95
M000
2630
2635

Vehicle

JUMPER

Data

New

Domain

Protections And Doors

Function

Central Locking

Function Diagram

Principle

Synopsis

Wiring

Installation

9C- 06/10/2013

SVG Viewer

Tools

History

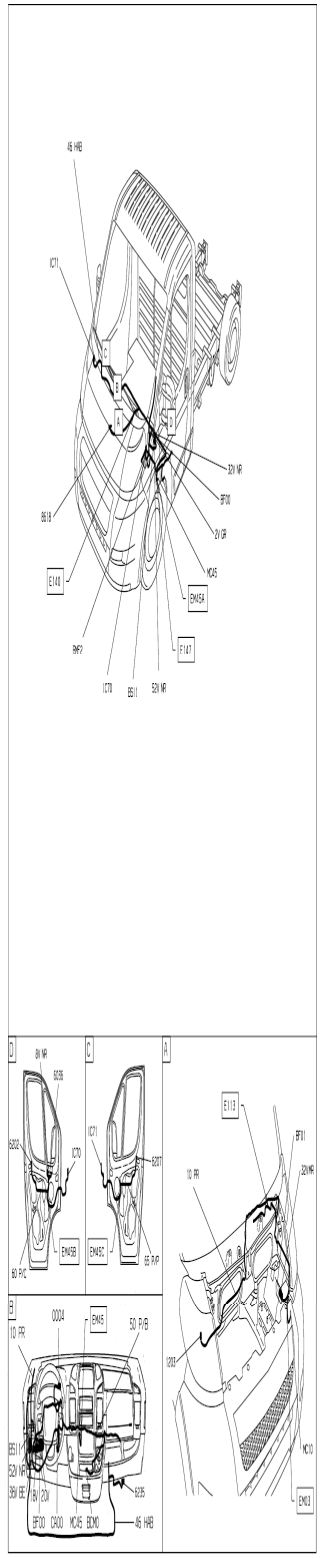
45 HAB
1C71
32V MR
BF00
2V GR
MC45
EM45A
E140
BS18
BMF2
1C70
BS11
52V MR
E147
D
8V MR
6S36
6S22
1C70
EM45B
60 PVC
C
1C71
6S37
EM45C
65 PVP
A
E113
BF01
32V MR
10 PR
1203
MC10
EM03
B
10 PR
0004
EM45
50 PVB
BS11
52V MR
36V GE
8V
20V
6S35
BF00
CA00
MC45
BD00
45 HAB

D3ARM3A1

Vehicle

JUMPER

Data

New

Domain

Protections And Doors

Function

Central Locking

Function Diagram

Principle

Synopsis

Wiring

Installation

9C- 06/10/2013

SVG Viewer

Tools

History

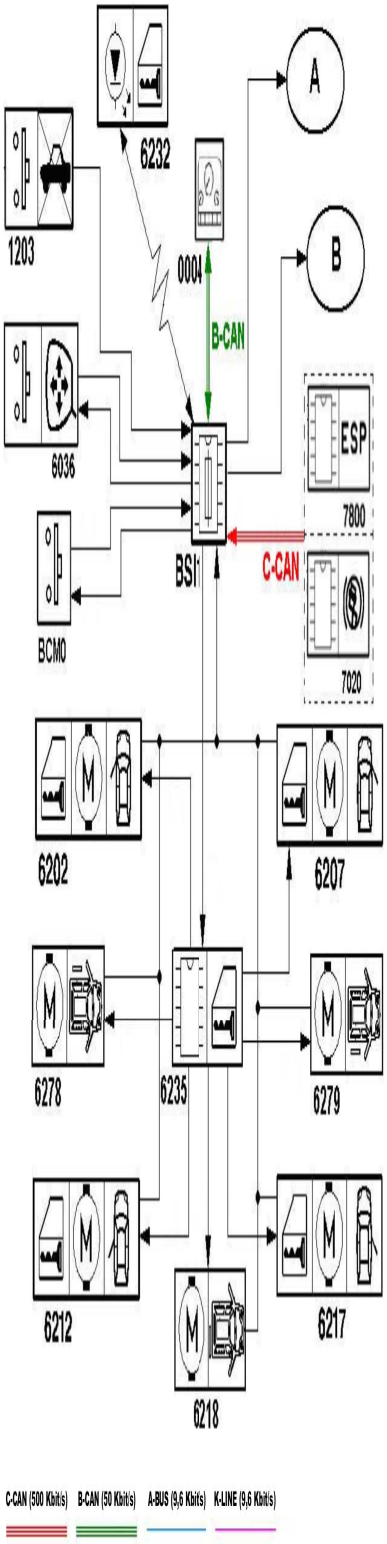
A
B
6232
1203
0004
B-CAN
6036
ESP
7800
C-CAN
BSI
BCM0
7020
6202
6207
6278
6235
6279
6212
6217
6218
C-CAN (500 Kbit/s)
B-CAN (50 Kbit/s)
A-BUS (9,6 Kbit/s)
K-LINE (9,6 Kbit/s)

Vehicle

JUMPER

Data

New

Domain

Lighting - Signalling

Function

Central Storage Compartment

Function Diagram

Principle

Wiring

Installation

9C- 06/10/2013

SVG Viewer

Tools

History

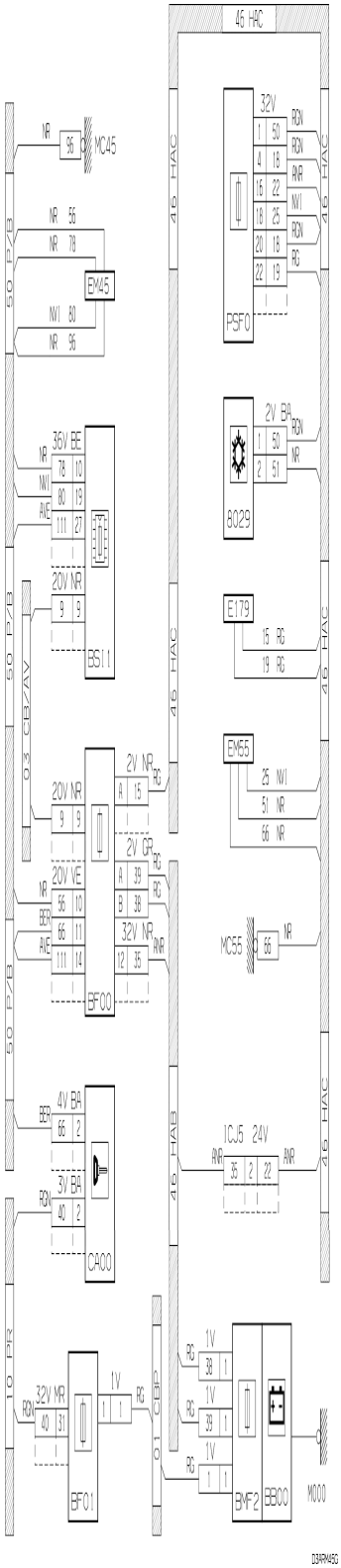
46 HAC
MC45
EM45
PSF0
8029
E179
EM55
MC55
BS11
BF00
CA00
BF01
BMF2
BB00
M000
D3ARM45G

Vehicle

JUMPER

Data

New

Domain

Protections And Doors

Function

Central Locking

Function Diagram

Principle

Synopsis

Wiring

Installation

9C- 06/10/2013

SVG Viewer

Tools

History

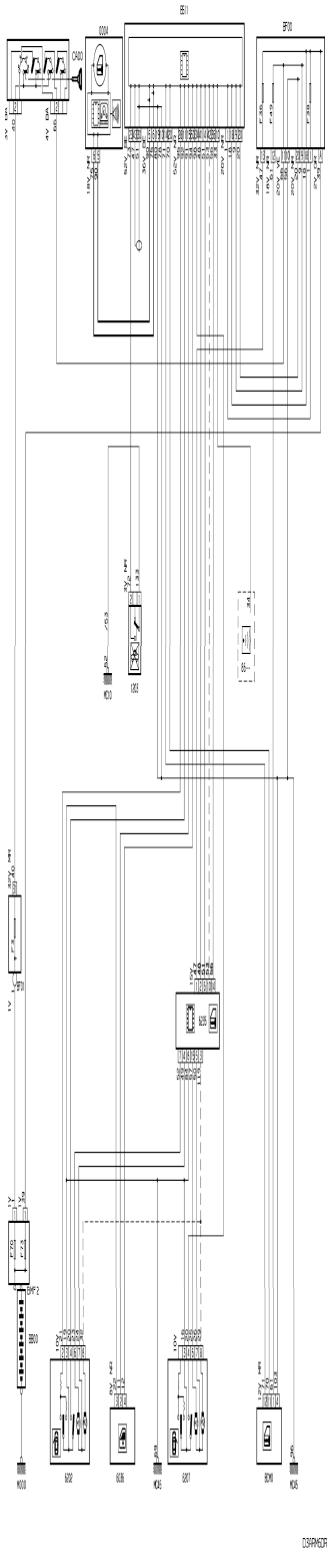

Vehicle

JUMPER

Data

New

Domain

Lighting - Signalling

Function

Central Storage Compartment

Function Diagram

Principle

Wiring

Installation

9C- 06/10/2013

SVG Viewer

Tools

History

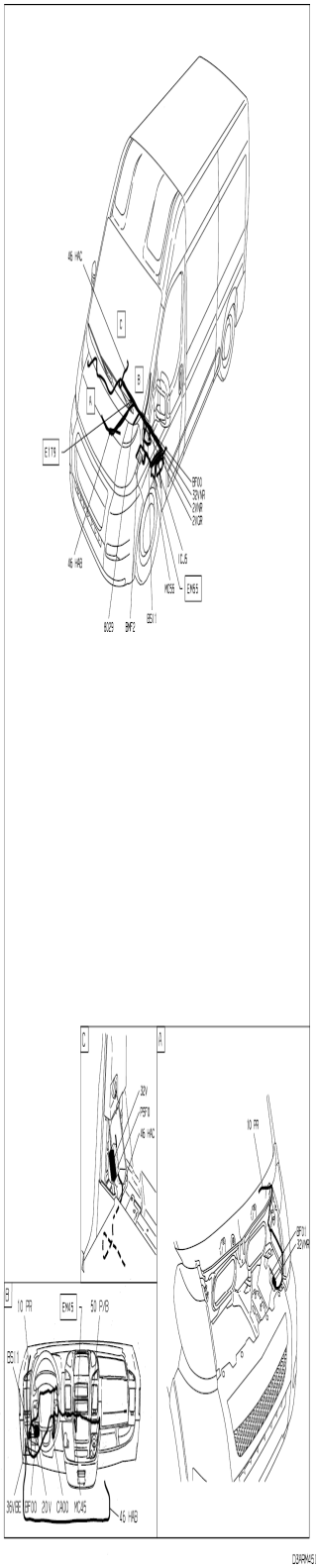
45 HAC
C
B
A
E178
BF00
32VAR
2VAR
2VGR
45 HAB
IC.5
MC55
EM55
B029
BMF2
BS11
C
32V
PSF0
45 HAC
A
10 PR
BF01
32VAR
B
10 PR
EM45
50 PXB
BS11
36VBE
BF00
20V
CA00
MC45
45 HAB

DIAGRAM51

Vehicle

JUMPER

Data

New

Domain

Lighting - Signalling

Function

Central Storage Compartment

Function Diagram

Principle

Wiring

Installation

9C- 06/10/2013

SVG Viewer

Tools

History

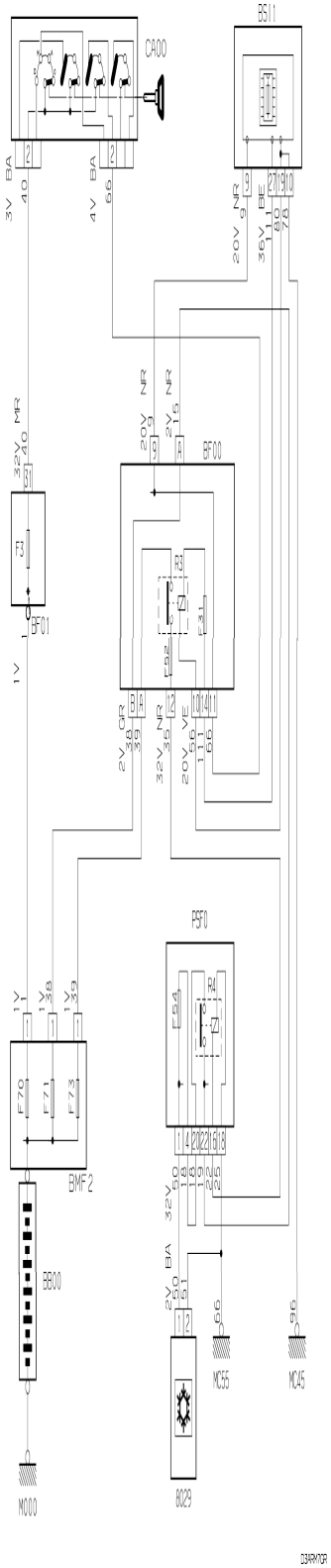
CA00
BS11
BF00
BF01
F3
F5F0
BMF2
BB00
MC55
MC45
M000
B029

Vehicle

JUMPER

Data

New

Domain

Comfort And Convenience

Function

Lighter And 12V Socket

Function Diagram

Principle

Wiring

Installation

9C- 06/10/2013

SVG Viewer

Tools

History

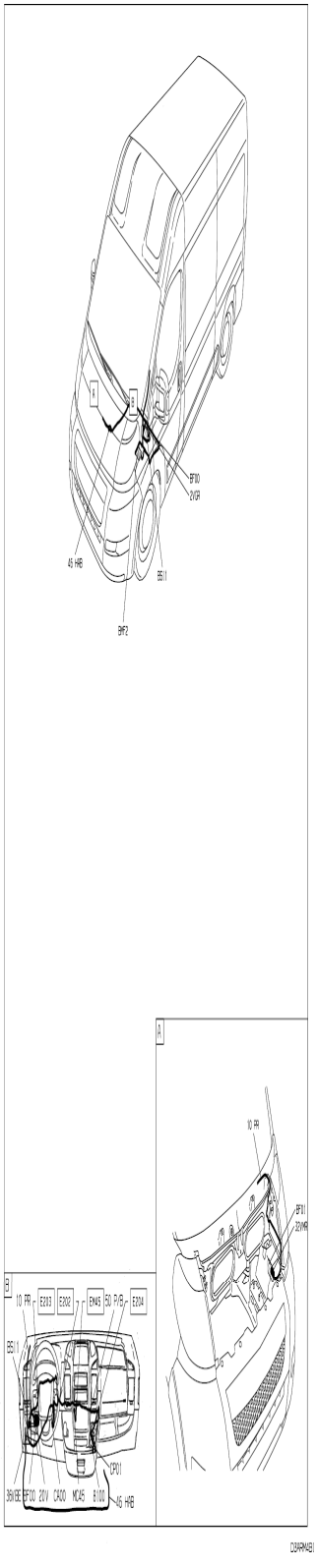
BF00
2VGR
45 HRB
BS11
BHF2
10 PR
BF01
32VHR
10 PR
E203
E202
EM45
50 PVB
E204
BS11
CP01
36VBE
BF00
20V
CA00
MC45
B100
45 HRB

DIAGRAM3

Vehicle

JUMPER

Data

New

Domain

Comfort And Convenience

Function

Lighter And 12V Socket

Function Diagram

Principle

Wiring

Installation

9C- 06/10/2013

SVG Viewer

Tools

History

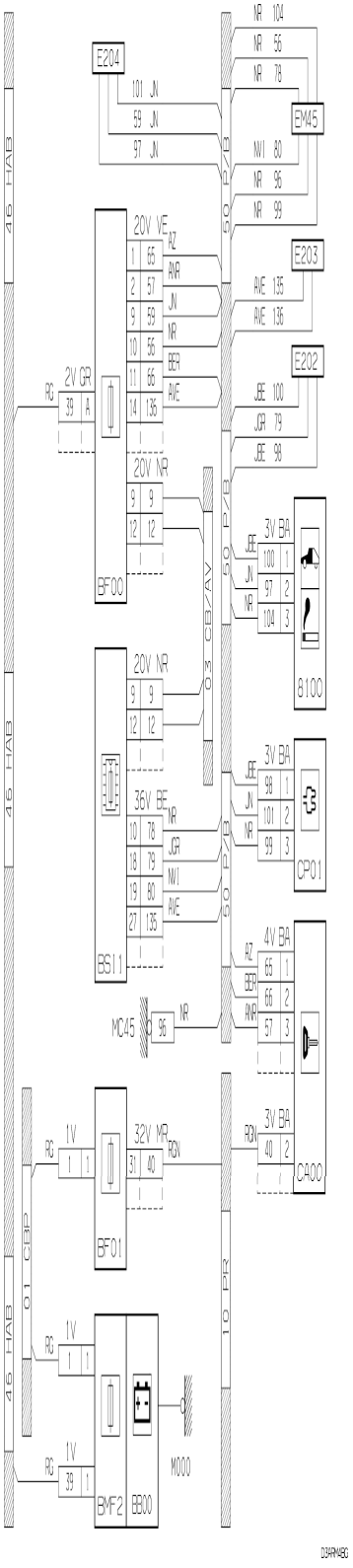
E204
EM45
E203
E202
BF00
BS11
BF01
BMF2
BB00
M000
MC45
CP01
CA00
8100
46 HAB
50 P/B
03 CB/AV
01 CBP
10 PR
20V VE
20V NR
36V BE
32V MR
2V GR
3V BA
4V BA
1V
D3AR4BG

Vehicle

JUMPER

Data

New

Domain

Comfort And Convenience

Function

Rear Additional Aircon

Function Diagram

Principle

Wiring

Installation

9C- 06/10/2013

SVG Viewer

Tools

History


12V HR
R227
5V HR
45 HAC
C
A
D
B
8049
8076
E340
10M5
10M5
E170
71 AR
10MBA
10MBB
IC45
32V HR
45 HAB
E175
8013
BMF2
2V GR
2V HR
BF00
BS11
MC55
EM55
E179
D
E231
8000
IC25A
C
32V
PBF0
45 HAC
55 CLM
A
10 PR
BF01
2V GR
IC26A
B
10 PR
EM45
50 P/B
BDM
BS11
35V BE
20V
BF00
CA00
MC45
10 PR
10M5
45 HAC
45 HAB

D3HRM431

Vehicle

JUMPER

Data

New

Domain

Comfort And Convenience

Function

Rear Additional Aircon

Function Diagram

Principle

Wiring

Installation

9C- 06/10/2013

SVG Viewer

Tools

History

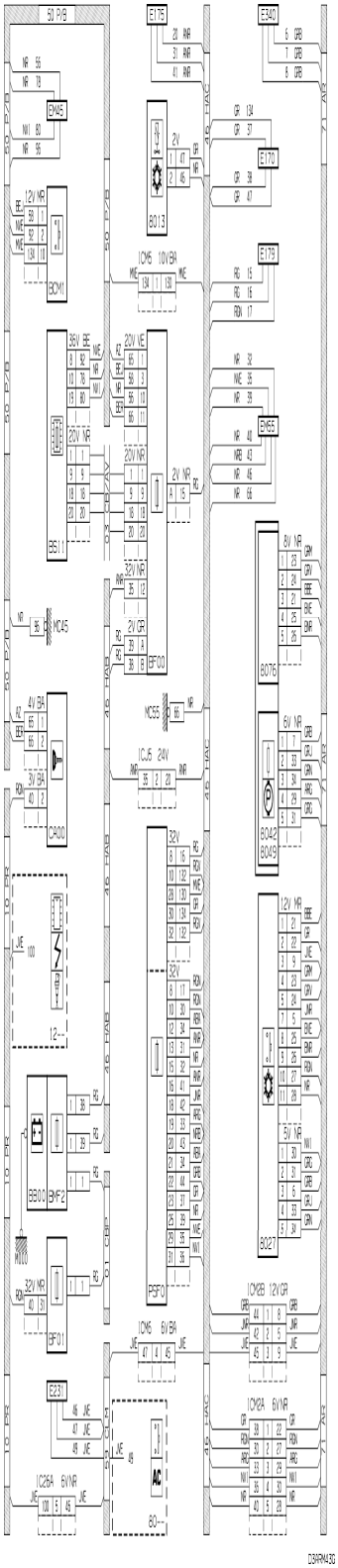

Vehicle

JUMPER

Data

New

Domain

Driving Assistance

Function

Cruise Control

Function Diagram

Principle

Wiring

Installation

9C- 06/10/2013

SVG Viewer

Tools

History

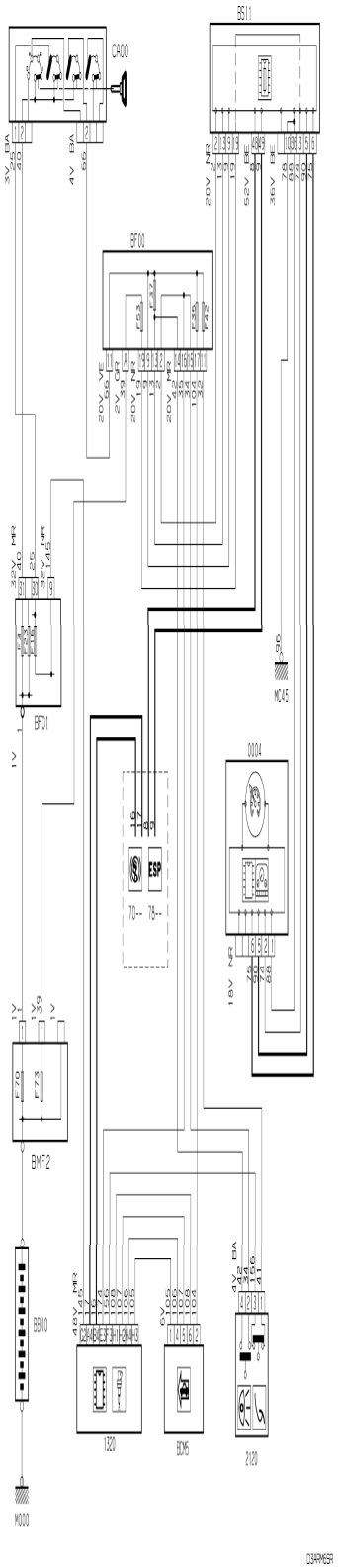
BS11
CA00
BF00
BF01
MC45
0004
ESP
70-- 78--
BMF2
BB00
1320
BCM5
2120
M000
D3ARM65R

Vehicle

JUMPER
Data
New

Domain

General Points

Function

Diagnostic Socket

Function Diagram

General

9C- 06/10/2013

SVG Viewer
Tools
History

U9DIAG01	DIAGNOSTIC SOCKET

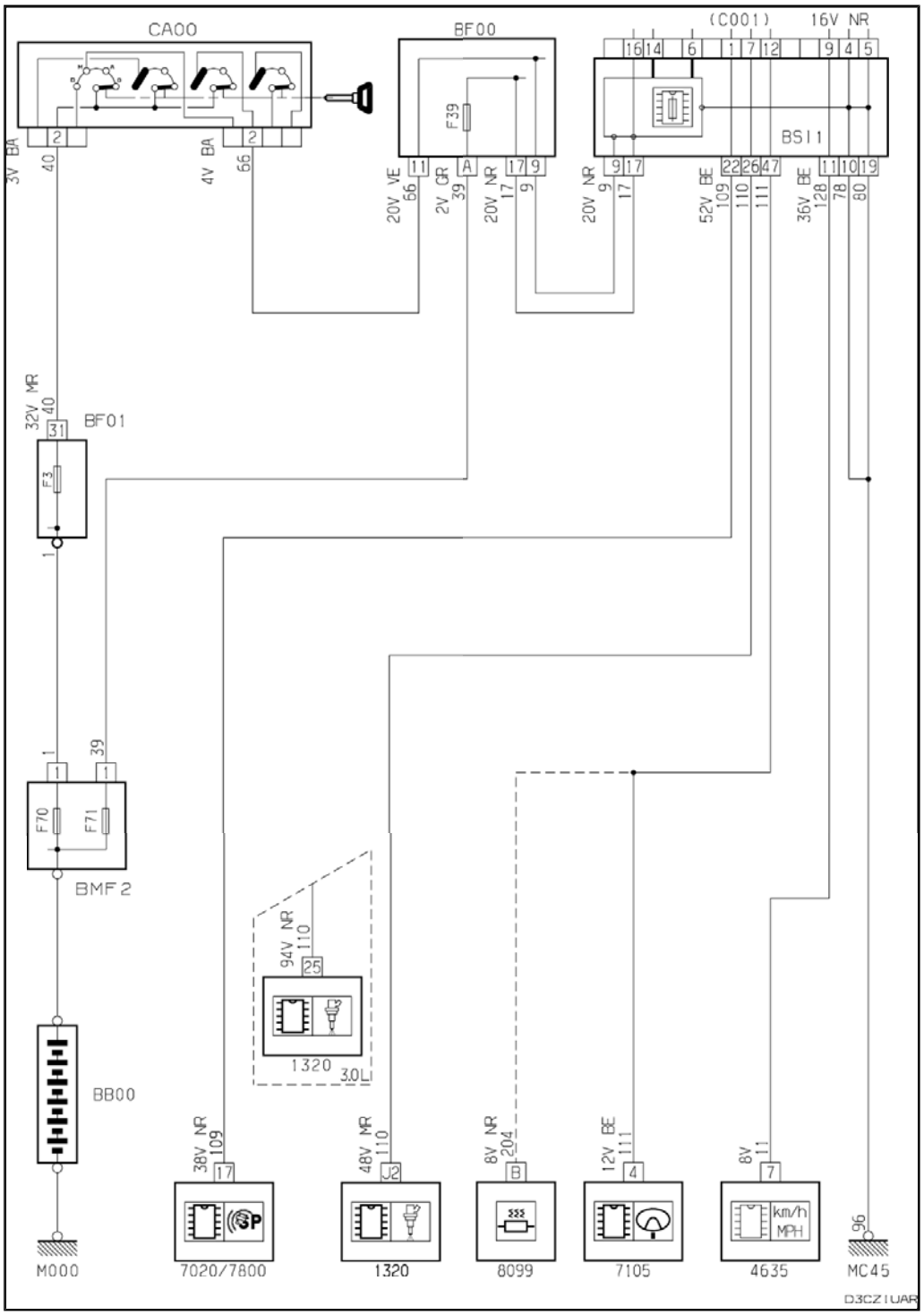

fig. d3cziuar

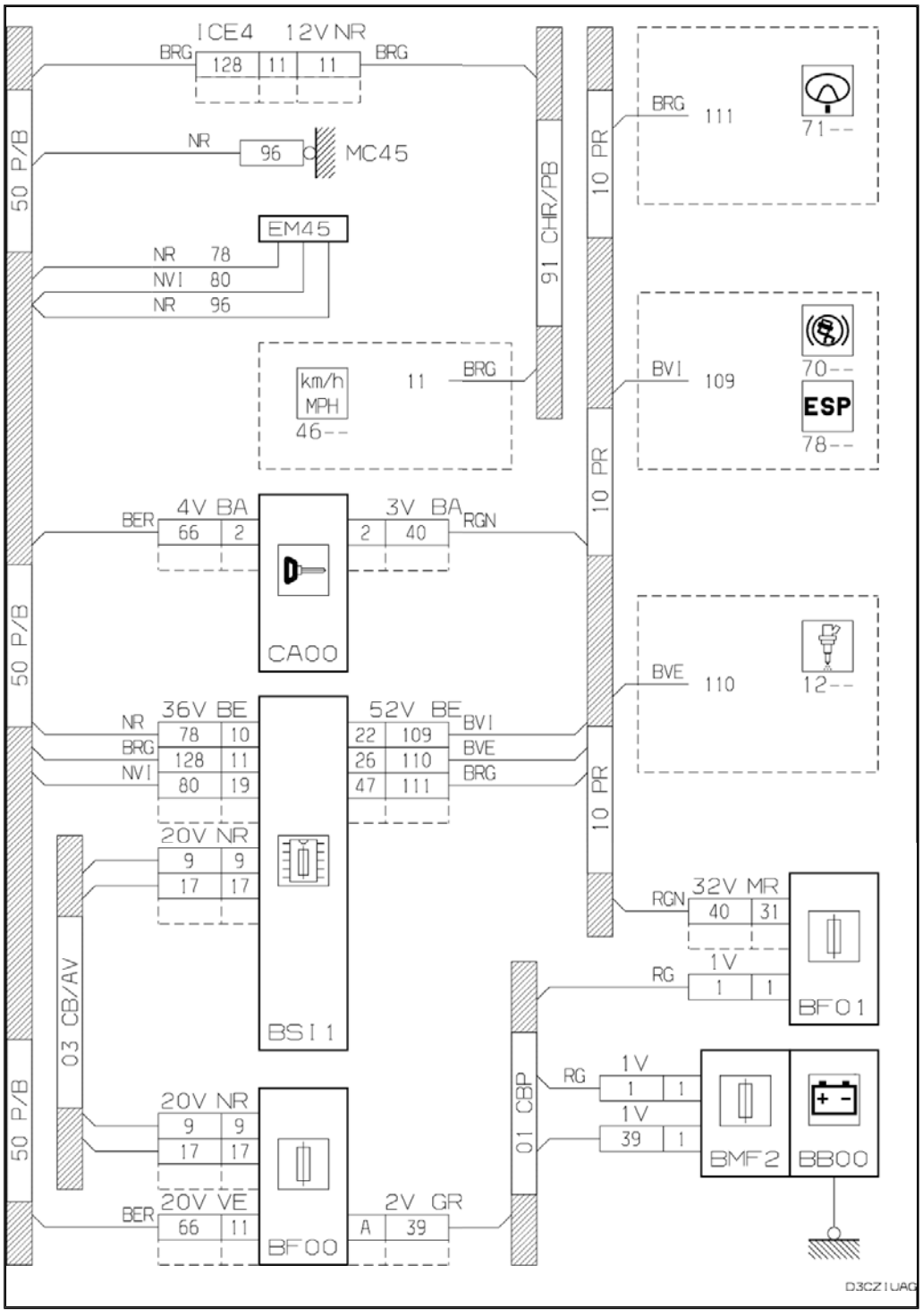

fig. d3cziuag

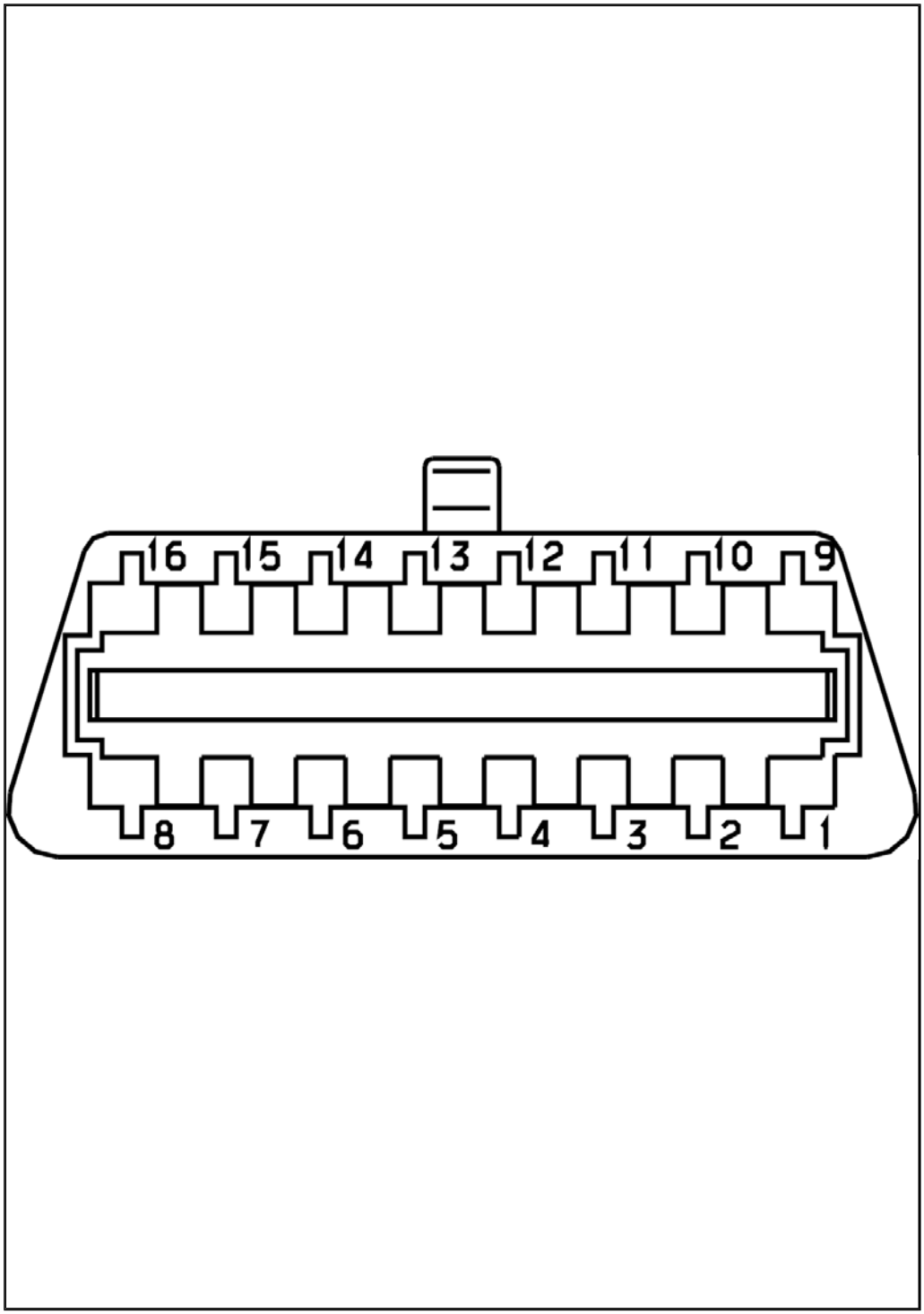

fig. prdiagu9

diagnostic socket	
channel	matching
1	diagnosis of line K . ABS - ESP
2	C - CAN H
3	diagnosis of line K
4	earth

5	earth
6	B - CAN B
7	engine ECU . ISO bus line K
8	unused
9	diagnosis of line K
10	C - CAN L
11	unused
12	diagnosis of line K
13	diagnosis of line K
14	B - CAN A
15	unused
16	battery +

Vehicle

JUMPER

Data

New

Domain

Lighting - Signalling

Function

Dipped Beam / Main Beam Headlamps

Function Diagram

Principle

Wiring

Installation

9C- 06/10/2013

SVG Viewer

Tools

History

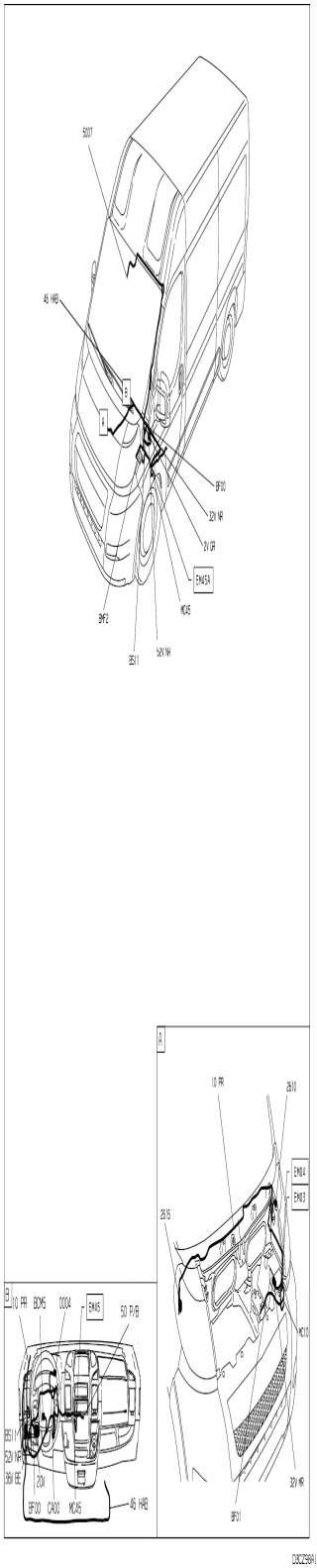
5007
46 HAB
B
A
BF00
32V MR
2V GR
EM05A
MC45
BMF2
BS11
52V MR
A
10 PR
2610
EM04
EM03
2615
MC10
32V MR
BF01
B
10 PR
BCM5
C004
EM45
50 PVB
BS11
52V MR
36V BE
20V
BF00
CA00
MC45
46 HAB

D3CZ98A1

Vehicle

JUMPER

Data

New

Domain

Lighting - Signalling

Function

Dipped Beam / Main Beam Headlamps

Function Diagram

Principle

Wiring

Installation

9C- 06/10/2013

SVG Viewer

Tools

History

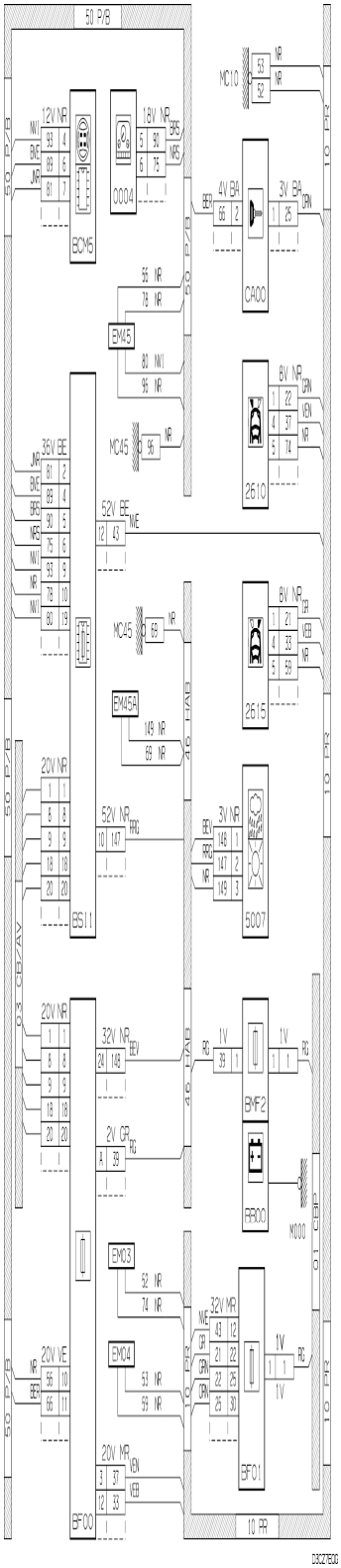
50 P/B
MC10
53 NR
52 NR
12V NR
NW1
BE1
NR
93 4
89 6
81 7
BSM5
18V NR
BB6
5 20
6 75
0004
4V BA
BE1
55 2
3V BA
BR1
1 25
CA00
55 NR
78 NR
EM45
80 NW1
96 NR
MC45
96
8V NR
GR1
1 22
4 37
5 74
2610
36V BE1
NR
BE1
BR1
NW1
81 2
89 4
30 5
75 6
93 9
78 10
80 19
52V BE1
NE
12 43
MC45
53 NR
8V NR
GR1
1 21
4 33
5 59
2615
EM45A
49 NR
69 NR
20V NR
1 1
8 8
9 9
18 18
20 20
BS11
52V NR
RR1
10 147
3V NR
BE1
RR1
NR
148 1
147 2
148 3
5007
20V NR
32V NR
BE1
24 149
1V
RR
39 1
BMF2
2V GR
RR
4 38
BR00
M000
EM03
52 NR
74 NR
EM04
53 NR
93 NR
32V NR
NE
NW1
NR
NR
43 12
21 22
22 25
25 30
1V
RR
BF01
20V NR
NR
BE1
55 10
66 11
20V NR
NW
NE
3 37
12 33
BF00
10 PR
D3CB/AV
50 P/B
10 PR
D3CB/AV
50 P/B
10 PR
D3CB/AV
50 P/B

Vehicle

JUMPER

Data

New

Domain

Lighting - Signalling

Function

Direction Indicators /
Side Repeaters / Hazard
Warning Lamps

Function Diagram

Principle

Wiring

Installation

9C- 06/10/2013

SVG Viewer

Tools

History

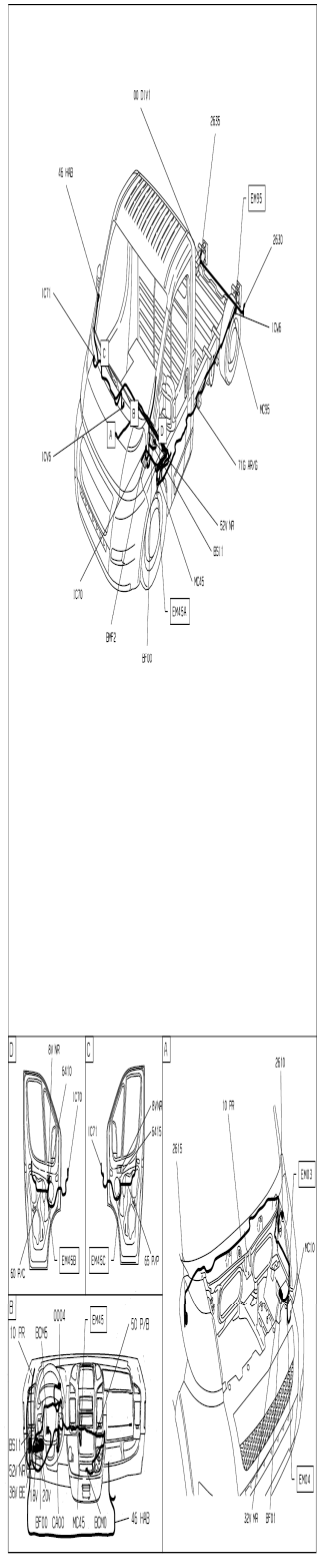
00 DIV1
2635
45 HRB
EM95
2630
1C71
1C46
MC95
1C45
71G WR/G
52N WR
BS11
MC45
1C70
EM45A
BMF2
BF00
D
8W WR
6A10
1C70
EM45B
50 P/C
C
8W WR
6A15
1C71
EM45C
65 P/P
A
2610
10 PR
2615
EM03
MC10
EM04
32N WR
BF01
B
0004
10 PR
BCM5
EM45
50 P/B
BS11
52N WR
36V BE
18V
20V
BF00
CA00
MC45
BCM0
45 HRB

D2C296D1

Vehicle

JUMPER

Data

New

Domain

Lighting - Signalling

Function

Direction Indicators /
Side Repeaters / Hazard
Warning Lamps

Function Diagram

Principle

Wiring

Installation

9C- 06/10/2013

SVG Viewer

Tools

History

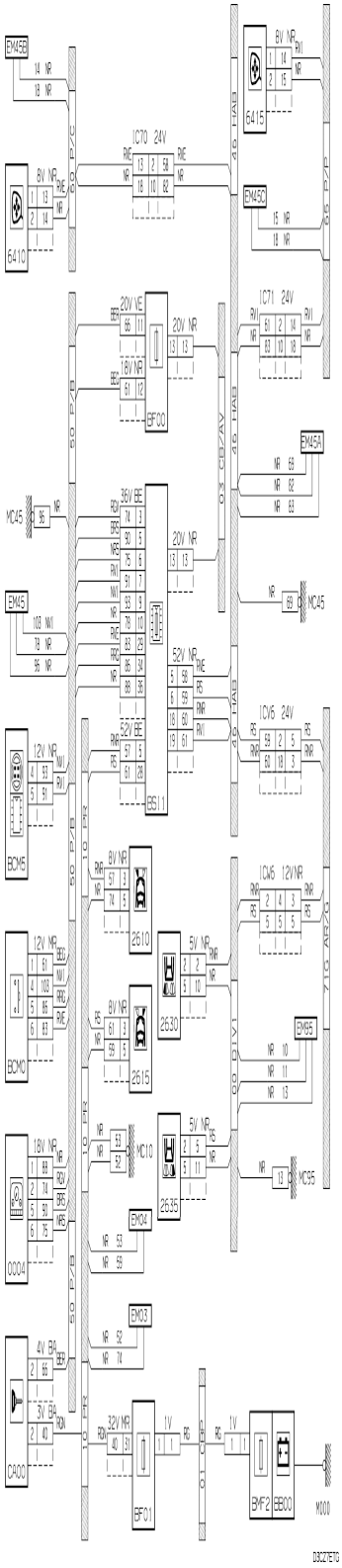
EM45B
14 NR
13 NR
8V NR
6410
1C70 24V
RAE
13 2 58
18 10 62
RAE
NR
46 TIAB
8V NR
6415
RAI
EM45B
15 NR
18 NR
1C71 24V
RAI
63 2 14
63 10 18
RAI
NR
EM45A
NR 63
NR 62
NR 63
20V NE
20V NR
13 12
18V NR
BF00
36V BE
20V NR
13 12
MC45
95
NR
EM5
103 WI
73 NR
95 NR
52V NR
RAE
RS
RAR
RAI
52V BE
EB11
MC45
69
NR
1C16 24V
RS
RAR
63 18 3
12V NR
BDM5
8V NR
2610
1C45 12V NR
RAR
RS
5V NR
2630
8V NR
2615
EM55
NR 10
NR 11
NR 13
12V NR
BDM7
18V NR
0004
NR
MC10
5V NR
2635
MC95
NR 13
EM04
NR 53
NR 52
EM03
NR 52
NR 74
4V BA
3V BA
CP00
32V NR
BF01
1V
RS
1V
BMF2
EB00
M100
D82FE7G

Vehicle

JUMPER

Data

New

Domain

Lighting - Signalling

Function

Direction Indicators /
Side Repeaters / Hazard
Warning Lamps

Function Diagram

Principle

Wiring

Installation

9C- 06/10/2013

SVG Viewer

Tools

History

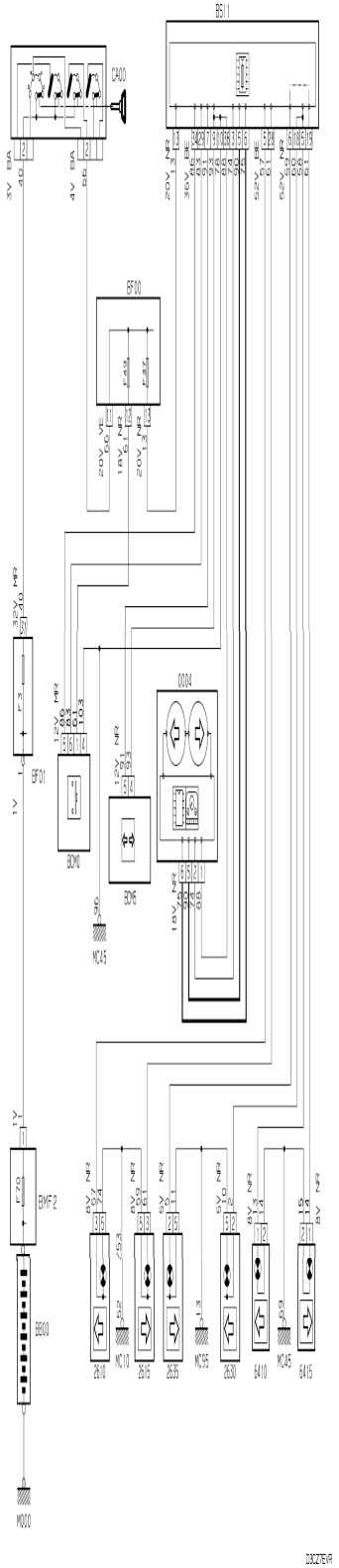
BS11
CA00
BF00
BF01
BCM0
BCM5
0004
MC45
BMF2
BB00
M000
MC10
MC95
MC45
D3C27EVR

Vehicle

JUMPER

Data

New

Domain

Driver Information

Function

Exterior Temperature Information

Function Diagram

Principle

Installation

9C- 06/10/2013

SVG Viewer

Tools

History

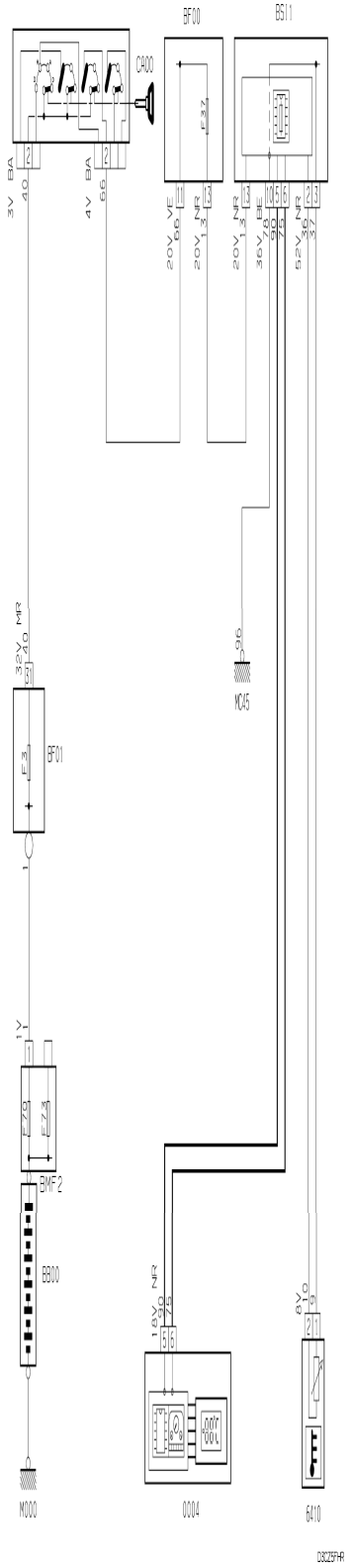
BF00
BS11
CA00
3V BA
4V BA
20V VE
20V NR
20V NR
36V BE
52V NR
32V MR
MC45
BF01
1V
BMF2
BB00
M000
0004
6410
D3C25FHR

Vehicle

JUMPER

Data

New

Domain

Instruments And Controls

Function

Electrically Controlled Mirrors

Function Diagram

Principle

Wiring

Installation

9C- 06/10/2013

SVG Viewer

Tools

History

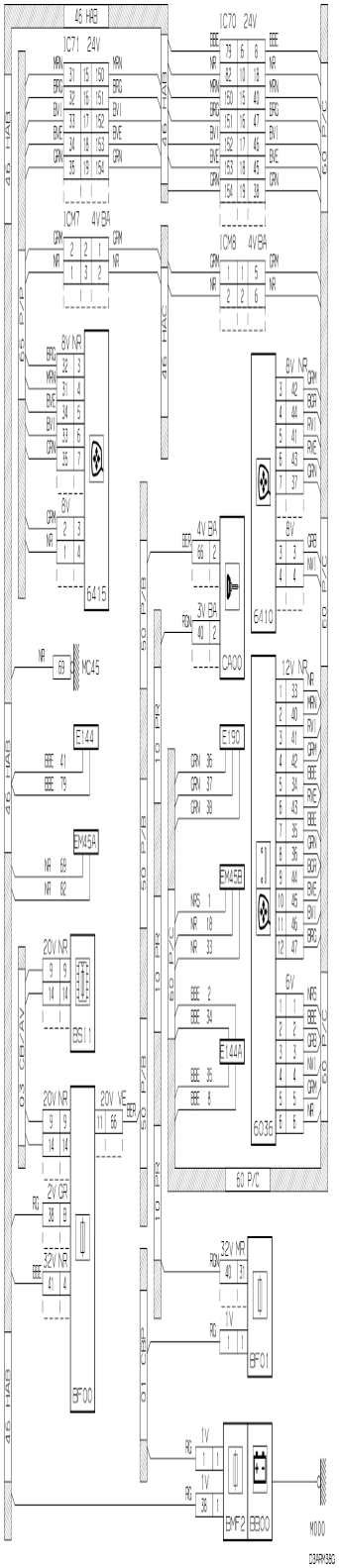
45 HAB
IC71 24V
IC70 24V
ICM7 4VBA
ICM8 4VBA
6415
6410
6036
MC45
E144
EM45A
EM45B
E190
E144A
BS11
BF00
BF01
BMF2
BB00
M000
60 P/C
D3ARM38G

Vehicle

JUMPER

Data

New

Domain

Protections And Doors

Function

Electric Window

Function Diagram

Principle

Wiring

Installation

9C- 06/10/2013

SVG Viewer

Tools

History

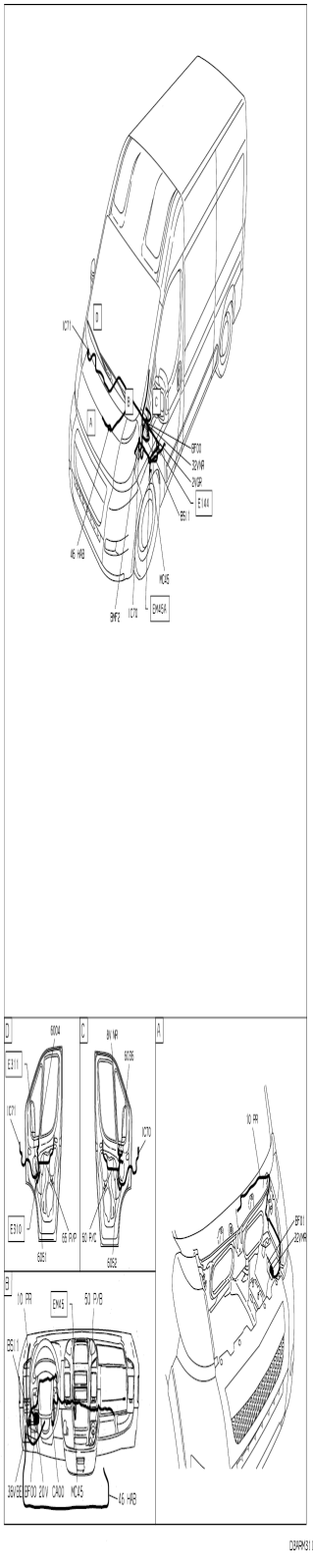
D
C
A
B
E11
E10
E144
EM54
EM43
IC71
IC70
BSC1
BSC2
BSC3
BF01
BF02
20VAR
20VEP
MC45
4S 4WB
10 PR
5V PVB
5V PVC
5V PVP
5V PVR
5V PVS
5V PVT
5V PVU
5V PVV
5V PVW
5V PVX
5V PVY
5V PVZ
5V PW0
5V PW1
5V PW2
5V PW3
5V PW4
5V PW5
5V PW6
5V PW7
5V PW8
5V PW9
5V PWA
5V PWB
5V PWC
5V PWD
5V PWE
5V PWF
5V PWG
5V PWH
5V PWJ
5V PWK
5V PWL
5V PWM
5V PWN
5V PWP
5V PWR
5V PWS
5V PWT
5V PWU
5V PWV
5V PWW
5V PWX
5V PWY
5V PWZ
5V PX0
5V PX1
5V PX2
5V PX3
5V PX4
5V PX5
5V PX6
5V PX7
5V PX8
5V PX9
5V PXA
5V PXB
5V PXC
5V PXD
5V PXE
5V PXF
5V PXG
5V PXH
5V PXJ
5V PXK
5V PXL
5V PXM
5V PXN
5V PXP
5V PXR
5V PXS
5V PXT
5V PXU
5V PXV
5V PXW
5V PXX
5V PXY
5V PXZ
5V PY0
5V PY1
5V PY2
5V PY3
5V PY4
5V PY5
5V PY6
5V PY7
5V PY8
5V PY9
5V PYA
5V PYB
5V PYC
5V PYD
5V PYE
5V PYF
5V PYG
5V PYH
5V PYJ
5V PYK
5V PYL
5V PYM
5V PYN
5V PYP
5V PYR
5V PYS
5V PYT
5V PYU
5V PYV
5V PYW
5V PYX
5V PYY
5V PYZ
5V PZ0
5V PZ1
5V PZ2
5V PZ3
5V PZ4
5V PZ5
5V PZ6
5V PZ7
5V PZ8
5V PZ9
5V PZA
5V PZB
5V PZC
5V PZD
5V PZE
5V PZF
5V PZG
5V PZH
5V PZJ
5V PZK
5V PZL
5V PZM
5V PZN
5V PZP
5V PZR
5V PZS
5V PZT
5V PZU
5V PZV
5V PZW
5V PZX
5V PZY
5V PZZ
5V P10
5V P11
5V P12
5V P13
5V P14
5V P15
5V P16
5V P17
5V P18
5V P19
5V P1A
5V P1B
5V P1C
5V P1D
5V P1E
5V P1F
5V P1G
5V P1H
5V P1J
5V P1K
5V P1L
5V P1M
5V P1N
5V P1P
5V P1R
5V P1S
5V P1T
5V P1U
5V P1V
5V P1W
5V P1X
5V P1Y
5V P1Z
5V P20
5V P21
5V P22
5V P23
5V P24
5V P25
5V P26
5V P27
5V P28
5V P29
5V P2A
5V P2B
5V P2C
5V P2D
5V P2E
5V P2F
5V P2G
5V P2H
5V P2J
5V P2K
5V P2L
5V P2M
5V P2N
5V P2P
5V P2R
5V P2S
5V P2T
5V P2U
5V P2V
5V P2W
5V P2X
5V P2Y
5V P2Z
5V P30
5V P31
5V P32
5V P33
5V P34
5V P35
5V P36
5V P37
5V P38
5V P39
5V P3A
5V P3B
5V P3C
5V P3D
5V P3E
5V P3F
5V P3G
5V P3H
5V P3J
5V P3K
5V P3L
5V P3M
5V P3N
5V P3P
5V P3R
5V P3S
5V P3T
5V P3U
5V P3V
5V P3W
5V P3X
5V P3Y
5V P3Z
5V P40
5V P41
5V P42
5V P43
5V P44
5V P45
5V P46
5V P47
5V P48
5V P49
5V P4A
5V P4B
5V P4C
5V P4D
5V P4E
5V P4F
5V P4G
5V P4H
5V P4J
5V P4K
5V P4L
5V P4M
5V P4N
5V P4P
5V P4R
5V P4S
5V P4T
5V P4U
5V P4V
5V P4W
5V P4X
5V P4Y
5V P4Z
5V P50
5V P51
5V P52
5V P53
5V P54
5V P55
5V P56
5V P57
5V P58
5V P59
5V P5A
5V P5B
5V P5C
5V P5D
5V P5E
5V P5F
5V P5G
5V P5H
5V P5J
5V P5K
5V P5L
5V P5M
5V P5N
5V P5P
5V P5R
5V P5S
5V P5T
5V P5U
5V P5V
5V P5W
5V P5X
5V P5Y
5V P5Z
5V P60
5V P61
5V P62
5V P63
5V P64
5V P65
5V P66
5V P67
5V P68
5V P69
5V P6A
5V P6B
5V P6C
5V P6D
5V P6E
5V P6F
5V P6G
5V P6H
5V P6J
5V P6K
5V P6L
5V P6M
5V P6N
5V P6P
5V P6R
5V P6S
5V P6T
5V P6U
5V P6V
5V P6W
5V P6X
5V P6Y
5V P6Z
5V P70
5V P71
5V P72
5V P73
5V P74
5V P75
5V P76
5V P77
5V P78
5V P79
5V P7A
5V P7B
5V P7C
5V P7D
5V P7E
5V P7F
5V P7G
5V P7H
5V P7J
5V P7K
5V P7L
5V P7M
5V P7N
5V P7P
5V P7R
5V P7S
5V P7T
5V P7U
5V P7V
5V P7W
5V P7X
5V P7Y
5V P7Z
5V P80
5V P81
5V P82
5V P83
5V P84
5V P85
5V P86
5V P87
5V P88
5V P89
5V P8A
5V P8B
5V P8C
5V P8D
5V P8E
5V P8F
5V P8G
5V P8H
5V P8J
5V P8K
5V P8L
5V P8M
5V P8N
5V P8P
5V P8R
5V P8S
5V P8T
5V P8U
5V P8V
5V P8W
5V P8X
5V P8Y
5V P8Z
5V P90
5V P91
5V P92
5V P93
5V P94
5V P95
5V P96
5V P97
5V P98
5V P99
5V P9A
5V P9B
5V P9C
5V P9D
5V P9E
5V P9F
5V P9G
5V P9H
5V P9J
5V P9K
5V P9L
5V P9M
5V P9N
5V P9P
5V P9R
5V P9S
5V P9T
5V P9U
5V P9V
5V P9W
5V P9X
5V P9Y
5V P9Z
5V PA0
5V PA1
5V PA2
5V PA3
5V PA4
5V PA5
5V PA6
5V PA7
5V PA8
5V PA9
5V PAA
5V PAB
5V PAC
5V PAD
5V PAE
5V PAF
5V PAG
5V PAH
5V PAJ
5V PAK
5V PAL
5V PAM
5V PAN
5V PAP
5V PAR
5V PAS
5V PAT
5V PAU
5V PAV
5V PAW
5V PAX
5V PAY
5V PAZ
5V PB0
5V PB1
5V PB2
5V PB3
5V PB4
5V PB5
5V PB6
5V PB7
5V PB8
5V PB9
5V PBA
5V PBB
5V PBC
5V PBD
5V PBE
5V PBF
5V PBG
5V PBH
5V PBJ
5V PBK
5V PBL
5V PBM
5V PBN
5V PBP
5V PBR
5V PBS
5V PBT
5V PBU
5V PBV
5V PBW
5V PBX
5V PBY
5V PBZ
5V PC0
5V PC1
5V PC2
5V PC3
5V PC4
5V PC5
5V PC6
5V PC7
5V PC8
5V PC9
5V PCA
5V PCB
5V PCC
5V PCD
5V PCE
5V PCF
5V PCG
5V PCH
5V PCJ
5V PCK
5V PCL
5V PCM
5V PCN
5V PCP
5V PCR
5V PCS
5V PCT
5V PCU
5V PCV
5V PCW
5V PCX
5V PCY
5V PCZ
5V PD0
5V PD1
5V PD2
5V PD3
5V PD4
5V PD5
5V PD6
5V PD7
5V PD8
5V PD9
5V PDA
5V PDB
5V PDC
5V PDD
5V PDE
5V PDF
5V PDG
5V PDH
5V PDJ
5V PDK
5V PDL
5V PDM
5V PDN
5V PDP
5V PDR
5V PDS
5V PDT
5V PDU
5V PDV
5V PDW
5V PDX
5V PDY
5V PDZ
5V PE0
5V PE1
5V PE2
5V PE3
5V PE4
5V PE5
5V PE6
5V PE7
5V PE8
5V PE9
5V PEA
5V PEB
5V PEC
5V PED
5V PEE
5V PEF
5V PEG
5V PEH
5V PEJ
5V PEK
5V PEL
5V PEM
5V PEN
5V PEP
5V PER
5V PES
5V PET
5V PEU
5V PEV
5V PEW
5V PEX
5V PEY
5V PEZ
5V PF0
5V PF1
5V PF2
5V PF3
5V PF4
5V PF5
5V PF6
5V PF7
5V PF8
5V PF9
5V PFA
5V PFB
5V PFC
5V PFD
5V PFE
5V PFF
5V PFG
5V PFH
5V PFJ
5V PFK
5V PFL
5V PFM
5V PFN
5V PFP
5V PFR
5V PFS
5V PFT
5V PFU
5V PFV
5V PFW
5V PFX
5V PFY
5V PFZ
5V PG0
5V PG1
5V PG2
5V PG3
5V PG4
5V PG5
5V PG6
5V PG7
5V PG8
5V PG9
5V PGA
5V PGB
5V PGC
5V PGD
5V PGE
5V PGF
5V PGG
5V PGH
5V PGJ
5V PGK
5V PGL
5V PGM
5V PGN
5V PGP
5V PGR
5V PGS
5V PGT
5V PGU
5V PGV
5V PGW
5V PGX
5V PGY
5V PGZ
5V PH0
5V PH1
5V PH2
5V PH3
5V PH4
5V PH5
5V PH6
5V PH7
5V PH8
5V PH9
5V PHA
5V PHB
5V PHC
5V PHD
5V PHE
5V PHF
5V PHG
5V PHH
5V PHJ
5V PHK
5V PHL
5V PHM
5V PHN
5V PHP
5V PHR
5V PHS
5V PHT
5V PHU
5V PHV
5V PHW
5V PHX
5V PHY
5V PHZ
5V PJ0
5V PJ1
5V PJ2
5V PJ3
5V PJ4
5V PJ5
5V PJ6
5V PJ7
5V PJ8
5V PJ9
5V PJA
5V PJB
5V PJC
5V PJD
5V PJE
5V PJF
5V PJG
5V PJH
5V PJJ
5V PJK
5V PJL
5V PJM
5V PJN
5V PJP
5V PJR
5V PJS
5V PJT
5V PJU
5V PJV
5V PJW
5V PJX
5V PJY
5V PJZ
5V PK0
5V PK1
5V PK2
5V PK3
5V PK4
5V PK5
5V PK6
5V PK7
5V PK8
5V PK9
5V PKA
5V PKB
5V PKC
5V PKD
5V PKE
5V PKF
5V PKG
5V PKH
5V PKJ
5V PKK
5V PKL
5V PKM
5V PKN
5V PKP
5V PKR
5V PKS
5V PKT
5V PKU
5V PKV
5V PKW
5V PKX
5V PKY
5V PKZ
5V PL0
5V PL1
5V PL2
5V PL3
5V PL4
5V PL5
5V PL6
5V PL7
5V PL8
5V PL9
5V PLA
5V PLB
5V PLC
5V PLD
5V PLE
5V PLF
5V PLG
5V PLH
5V PLJ
5V PLK
5V PLL
5V PLM
5V PLN
5V PLP
5V PLR
5V PLS
5V PLT
5V PLU
5V PLV
5V PLW
5V PLX
5V PLY
5V PLZ
5V PM0
5V PM1
5V PM2
5V PM3
5V PM4
5V PM5
5V PM6
5V PM7
5V PM8
5V PM9
5V PMA
5V PMB
5V PMC
5V PMD
5V PME
5V PMF
5V PMG
5V PMH
5V PMJ
5V PMK
5V PML
5V PMM
5V PMN
5V PMP
5V PMR
5V PMS
5V PMT
5V PMU
5V PMV
5V PMW
5V PMX
5V PMY
5V PMZ
5V PN0
5V PN1
5V PN2
5V PN3
5V PN4
5V PN5
5V PN6
5V PN7
5V PN8
5V PN9
5V PNA
5V PNB
5V PNC
5V PND
5V PNE
5V PNF
5V PNG
5V PNH
5V PNJ
5V PNK
5V PNL
5V PNM
5V PNN
5V PNP
5V PNR
5V PNS
5V PNT
5V PNU
5V PNV
5V PNW
5V PNX
5V PNY
5V PNZ
5V PP0
5V PP1
5V PP2
5V PP3
5V PP4
5V PP5
5V PP6
5V PP7
5V PP8
5V PP9
5V PPA
5V PPB
5V PPC
5V PPD
5V PPE
5V PPF
5V PPG
5V PPH
5V PPJ
5V PPK
5V PPL
5V PPM
5V PPN
5V PPP
5V PPR
5V PPS
5V PPT
5V PPU
5V PPV
5V PPW
5V PPX
5V PPY
5V PPZ
5V PR0
5V PR1
5V PR2
5V PR3
5V PR4
5V PR5
5V PR6
5V PR7
5V PR8
5V PR9
5V PRA
5V PRB
5V PRC
5V PRD
5V PRE
5V PRF
5V PRG
5V PRH
5V PRJ
5V PRK
5V PRL
5V PRM
5V PRN
5V PRP
5V PRR
5V PRS
5V PRT
5V PRU
5V PRV
5V PRW
5V PRX
5V PRY
5V PRZ
5V PS0
5V PS1
5V PS2
5V PS3
5V PS4
5V PS5
5V PS6
5V PS7
5V PS8
5V PS9
5V PSA
5V PSB
5V PSC
5V PSD
5V PSE
5V PSF
5V PSG
5V PSH
5V PSJ
5V PSK
5V PSL
5V PSM
5V PSN
5V PSP
5V PSR
5V PSS
5V PST
5V PSU
5V PSV
5V PSW
5V PSX
5V PSY
5V PSZ
5V PT0
5V PT1
5V PT2
5V PT3
5V PT4
5V PT5
5V PT6
5V PT7
5V PT8
5V PT9
5V PTA
5V PTB
5V PTC
5V PTD
5V PTE
5V PTF
5V PTG
5V PTH
5V PTJ
5V PTK
5V PTL
5V PTM
5V PTN
5V PTP
5V PTR
5V PTS
5V PTT
5V PTU
5V PTV
5V PTW
5V PTX
5V PTY
5V PTZ
5V PU0
5V PU1
5V PU2
5V PU3
5V PU4
5V PU5
5V PU6
5V PU7
5V PU8
5V PU9
5V PUA
5V PUB
5V PUC
5V PUD
5V PUE
5V PUF
5V PUG
5V PUH
5V PUJ
5V PUK
5V PUL
5V PUM
5V PUN
5V PUP
5V PUR
5V PUS
5V PUT
5V PUU
5V PUV
5V PUW
5V PUX
5V PUY
5V PUZ
5V PV0
5V PV1
5V PV2
5V PV3
5V PV4
5V PV5
5V PV6
5V PV7
5V PV8
5V PV9
5V PVA
5V PVB
5V PVC
5V PVD
5V PVE
5V PVF
5V PVG
5V PVH
5V PVJ
5V PVK
5V PVL
5V PVM
5V PVN
5V PVP
5V PVR
5V PVS
5V PVT
5V PVU
5V PVV
5V PVW
5V PVX
5V PVY
5V PVZ
5V PW0
5V PW1
5V PW2
5V PW3
5V PW4
5V PW5
5V PW6
5V PW7
5V PW8
5V PW9
5V PWA
5V PWB
5V PWC
5V PWD
5V PWE
5V PWF
5V PWG
5V PWH
5V PWJ
5V PWK
5V PWL
5V PWM
5V PWN
5V PWP
5V PWR
5V PWS
5V PWT
5V PWU
5V PWV
5V PWW
5V PWX
5V PWY
5V PWZ
5V PX0
5V PX1
5V PX2
5V PX3
5V PX4
5V PX5
5V PX6
5V PX7
5V PX8
5V PX9
5V PXA
5V PXB
5V PXC
5V PXD
5V PXE
5V PXF
5V PXG
5V PXH
5V PXJ
5V PXK
5V PXL
5V PXM
5V PXN
5V PXP
5V PXR
5V PXS
5V PXT
5V PXU
5V PXV
5V PXW
5V PXX
5V PXY
5V PXZ
5V PY0
5V PY1
5V PY2
5V PY3
5V PY4
5V PY5
5V PY6
5V PY7
5V PY8
5V PY9
5V PYA
5V PYB
5V PYC
5V PYD
5V PYE
5V PYF
5V PYG
5V PYH
5V PYJ
5V PYK
5V PYL
5V PYM
5V PYN
5V PYP
5V PYR
5V PYS
5V PYT
5V PYU
5V PYV
5V PYW
5V PYX
5V PYY
5V PYZ
5V PZ0
5V PZ1
5V PZ2
5V PZ3
5V PZ4
5V PZ5
5V PZ6
5V PZ7
5V PZ8
5V PZ9
5V PZA
5V PZB
5V PZC
5V PZD
5V PZE
5V PZF
5V PZG
5V PZH
5V PZJ
5V PZK
5V PZL
5V PZM
5V PZN
5V PZP
5V PZR
5V PZS
5V PZT
5V PZU
5V PZV
5V PZW
5V PZX
5V PZY
5V PZZ
5V P10
5V P11
5V P12
5V P13
5V P14
5V P15
5V P16
5V P17
5V P18
5V P19
5V P1A
5V P1B
5V P1C
5V P1D
5V P1E
5V P1F
5V P1G
5V P1H
5V P1J
5V P1K
5V P1L
5V P1M
5V P1N
5V P1P
5V P1R
5V P1S
5V P1T
5V P1U
5V P1V
5V P1W
5V P1X
5V P1Y
5V P1Z
5V P20
5V P21
5V P22
5V P23
5V P24
5V P25
5V P26
5V P27
5V P28
5V P29
5V P2A
5V P2B
5V P2C
5V P2D
5V P2E
5V P2F
5V P2G
5V P2H
5V P2J
5V P2K
5V P2L
5V P2M
5V P2N
5V P2P
5V P2R
5V P2S
5V P2T
5V P2U
5V P2V
5V P2W
5V P2X
5V P2Y
5V P2Z
5V P30
5V P31
5V P32
5V P33
5V P34
5V P35
5V P36
5V P37
5V P38
5V P39
5V P3A
5V P3B
5V P3C
5V P3D
5V P3E
5V P3F
5V P3G
5V P3H
5V P3J
5V P3K
5V P3L
5V P3M
5V P3N
5V P3P
5V P3R
5V P3S
5V P3T
5V P3U
5V P3V
5V P3W
5V P3X
5V P3Y
5V P3Z
5V P40
5V P41
5V P42
5V P43
5V P44
5V P45
5V P46
5V P47
5V P48
5V P49
5V P4A
5V P4B
5V P4C
5V P4D
5V P4E
5V P4F
5V P4G
5V P4H
5V P4J
5V P4K
5V P4L
5V P4M
5V P4N
5V P4P
5V P4R
5V P4S
5V P4T
5V P4U
5V P4V
5V P4W
5V P4X
5V P4Y
5V P4Z
5V P50
5V P51
5V P52
5V P53
5V P54
5V P55
5V P56
5V P57
5V P58
5V P59
5V P5A
5V P5B
5V P5C
5V P5D
5V P5E
5V P5F
5V P5G
5V P5H
5V P5J
5V P5K
5V P5L
5V P5M
5V P5N
5V P5P
5V P5R
5V P5S
5V P5T
5V P5U
5V P5V
5V P5W
5V P5X
5V P5Y
5V P5Z
5V P60
5V P61
5V P62
5V P63
5V P64
5V P65
5V P66
5V P67
5V P68
5V P69
5V P6A
5V P6B
5V P6C
5V P6D
5V P6E
5V P6F
5V P6G
5V P6H
5V P6J
5V P6K
5V P6L
5V P6M
5V P6N
5V P6P
5V P6R
5V P6S
5V P6T
5V P6U
5V P6V
5V P6W
5V P6X
5V P6Y
5V P6Z
5V P70
5V P71
5V P72
5V P73
5V P74
5V P75
5V P76
5V P77
5V P78
5V P79
5V P7A
5V P7B
5V P7C
5V P7D
5V P7E
5V P7F
5V P7G
5V P7H
5V P7J
5V P7K
5V P7L
5V P7M
5V P7N
5V P7P
5V P7R
5V P7S
5V P7T
5V P7U
5V P7V
5V P7W
5V P7X
5V P7Y
5V P7Z
5V P80
5V P81
5V P82
5V P83
5V P84
5V P85
5V P86
5V P87
5V P88
5V P89
5V P8A
5V P8B
5V P8C
5V P8D
5V P8E
5V P8F
5V P8G
5V P8H
5V P8J
5V P8K
5V P8L
5V P8M
5V P8N
5V P8P
5V P8R
5V P8S
5V P8T
5V P8U
5V P8V
5V P8W
5V P8X
5V P8Y
5V P8Z
5V P90
5V P91
5V P92
5V P93
5V P94
5V P95
5V P96
5V P97
5V P98
5V P99
5V P9A
5V P9B
5V P9C
5V P9D
5V P9E
5V P9F
5V P9G
5V P9H
5V P9J
5V P9K
5V P9L
5V P9M
5V P9N
5V P9P
5V P9R
5V P9S
5V P9T
5V P9U
5V P9V
5V P9W
5V P9X
5V P9Y
5V P9Z
5V PA0
5V PA1
5V PA2
5V PA3
5V PA4
5V PA5
5V PA6
5V PA7
5V PA8
5V PA9
5V PAA
5V PAB
5V PAC
5V PAD
5V PAE
5V PAF
5V PAG
5V PAH
5V PAJ
5V PAK
5V PAL
5V PAM
5V PAN
5V PAP
5V PAR
5V PAS
5V PAT
5V PAU
5V PAV
5V PAW
5V PAX
5V PAY
5V PAZ
5V PB0
5V PB1
5V PB2
5V PB3
5V PB4
5V PB5
5V PB6
5V PB7
5V PB8
5V PB9
5V PBA
5V PBB
5V PBC
5V PBD
5V PBE
5V PBF
5V PBG
5V PBH
5V PBJ
5V PBK
5V PBL
5V PBM
5V PBN
5V PBP
5V PBR
5V PBS
5V PBT
5V PBU
5V PBV
5V PBW
5V PBX
5V PBY
5V PBZ
5V PC0
5V PC1
5V PC2
5V PC3
5V PC4
5V PC5
5V PC6
5V PC7
5V PC8
5V PC9
5V PCA
5V PCB
5V PCC
5V PCD
5V PCE
5V PCF
5V PCG
5V PCH
5V PCJ
5V PCK
5V PCL
5V PCM
5V PCN
5V PCP
5V PCR
5V PCS
5V PCT
5V PCU
5V PCV
5V PCW
5V PCX
5V PCY
5V PCZ
5V PD0
5V PD1
5V PD2
5V PD3
5V PD4
5V PD5
5V PD6
5V PD7
5V PD8
5V PD9
5V PDA
5V PDB
5V PDC
5V PDD
5V PDE
5V PDF
5V PDG
5V PDH
5V PDJ
5V PDK
5V PDL
5V PDM
5V PDN
5V PDP
5V PDR
5V PDS
5V PDT
5V PDU
5V PDV
5V PDW
5V PDX
5V PDY
5V PDZ
5V PE0
5V PE1
5V PE2
5V PE3
5V PE4
5V PE5
5V PE6
5V PE7
5V PE8
5V PE9
5V PEA
5V PEB
5V PEC
5V PED
5V PEE
5V PEF
5V PEG
5V PEH
5V PEJ
5V PEK
5V PEL
5V PEM
5V PEN
5V PEP
5V PER
5V PES
5V PET
5V PEU
5V PEV
5V PEW
5V PEX
5V PEY
5V PEZ
5V PF0
5V PF1
5V PF2
5V PF3
5V PF4
5V PF5
5V PF6
5V PF7
5V PF8
5V PF9
5V PFA
5V PFB
5V PFC
5V PFD
5V PFE
5V PFF
5V PFG
5V PFH
5V PFJ
5V PFK
5V PFL
5V PFM
5V PFN
5V PFP
5V PFR
5V PFS
5V PFT
5V PFU
5V PFV
5V PFW
5V PFX
5V PFY
5V PFZ
5V PG0
5V PG1
5V PG2
5V PG3
5V PG4
5V PG5
5V PG6
5V PG7
5V PG8
5V PG9
5V PGA
5V PGB
5V PGC
5V PGD
5V PGE
5V PGF
5V PGG
5V PGH
5V PGJ
5V PGK
5V PGL
5V PGM
5V PGN
5V PGP
5V PGR
5V PGS
5V PGT
5V PGU
5V PGV
5V PGW
5V PGX
5V PGY
5V PGZ
5V PH0
5V PH1
5V PH2
5V PH3
5V PH4
5V PH5
5V PH6
5V PH7
5V PH8
5V PH9
5V PHA
5V PHB
5V PHC
5V PHD
5V PHE
5V PHF
5V PHG
5V PHH
5V PHJ
5V PHK
5V PHL
5V PHM
5V PHN
5V PHP
5V PHR
5V PHS
5V PHT
5V PHU
5V PHV
5V PHW
5V PHX
5V PHY
5V PHZ
5V PJ0
5V PJ1
5V PJ2
5V PJ3
5V PJ4
5V PJ5
5V PJ6
5V PJ7
5V PJ8
5V PJ9
5V PJA
5V PJB
5V PJC
5V PJD
5V PJE
5V PJF
5V PJG
5V PJH
5V PJJ
5V PJK
5V PJL
5V PJM
5V PJN
5V PJP
5V PJR
5V PJS
5V PJT
5V PJU
5V PJV
5V PJW
5V PJX
5V PJY
5V PJZ
5V PK0
5V PK1
5V PK2
5V PK3
5V PK4
5V PK5
5V PK6
5V PK7
5V PK8
5V PK9
5V PKA
5V PKB
5V PKC
5V PKD
5V PKE
5V PKF
5V PKG
5V PKH
5V PKJ
5V PKK
5V PKL
5V PKM
5V PKN
5V PKP
5V PKR
5V PKS
5V PKT
5V PKU
5V PKV
5V PKW
5V PKX
5V PKY
5V PKZ
5V PL0
5V PL1
5V PL2
5V PL3
5V PL4
5V PL5
5V PL6
5V PL7
5V PL8
5V PL9
5V PLA
5V PLB
5V PLC
5V PLD
5V PLE
5V PLF
5V PLG
5V PLH
5V PLJ
5V PLK
5V PLL
5V PLM
5V PLN
5V PLP
5V PLR
5V PLS
5V PLT
5V PLU
5V PLV
5V PLW
5V PLX
5V PLY
5V PLZ
5V PM0
5V PM1
5V PM2
5V PM3
5V PM4
5V PM5
5V PM6
5V PM7
5V PM8
5V PM9
5V PMA
5V PMB
5V PMC
5V PMD
5V PME
5V PMF
5V PMG
5V PMH
5V PMJ
5V PMK
5V PML
5V PMM
5V PMN
5V PMP
5V PMR
5V PMS
5V PMT
5V PMU
5V PMV
5V PMW
5V PMX
5V PMY
5V PMZ
5V PN0
5V PN1
5V PN2
5V PN3
5V PN4
5V PN5
5V PN6
5V PN7
5V PN8
5V PN9
5V PNA
5V PNB
5V PNC
5V PND
5V PNE
5V PNF
5V PNG
5V PNH
5V PNJ
5V PNK
5V PNL
5V PNM
5V PNN
5V PNP
5V PNR
5V PNS
5V PNT
5V PNU
5V PNV
5V PNW
5V PNX
5V PNY
5V PNZ
5V PP0
5V PP1
5V PP2
5V PP3
5V PP4
5V PP5
5V PP6
5V PP7
5V PP8
5V PP9
5V PPA
5V PPB
5V PPC
5V PPD
5V PPE
5V PPF
5V PPG
5V PPH
5V PPJ
5V PPK
5V PPL
5V PPM
5V PPN
5V PPP
5V PPR
5V PPS
5V PPT
5V PPU
5V PPV
5V PPW
5V PPX
5V PPY
5V PPZ
5V PR0
5V PR1
5V PR2
5V PR3
5V PR4
5V PR5
5V PR6
5V PR7
5V PR8
5V PR9
5V PRA
5V PRB
5V PRC
5V PRD
5V PRE
5V PRF
5V PRG
5V PRH
5V PRJ
5V PRK
5V PRL
5V PRM
5V PRN
5V PRP
5V PRR
5V PRS
5V PRT
5V PRU
5V PRV
5V PRW
5V PRX
5V PRY
5V PRZ
5V PS0
5V PS1
5V PS2
5V PS3
5V PS4
5V PS5
5V PS6
5V PS7
5V PS8
5V PS9
5V PSA
5V PSB
5V PSC
5V PSD
5V PSE
5V PSF
5V PSG
5V PSH
5V PSJ
5V PSK
5V PSL
5V PSM
5V PSN
5V PSP
5V PSR
5V PSS
5V PST
5V PSU
5V PSV
5V PSW
5V PSX
5V PSY
5V PSZ
5V PT0
5V PT1
5V PT2
5V PT3
5V PT4
5V PT5
5V PT6
5V PT7
5V PT8
5V PT9
5V PTA
5V PTB
5V PTC
5V PTD
5V PTE
5V PTF
5V PTG
5V PTH
5V PTJ
5V PTK
5V PTL
5V PTM
5V PTN
5V PTP
5V PTR
5V PTS
5V PTT
5V PTU
5V PTV
5V PTW
5V PTX
5V PTY
5V PTZ
5V PU0
5V PU1
5V PU2
5V PU3
5V PU4
5V PU5
5V PU6
5V PU7
5V PU8
5V PU9
5V PUA
5V PUB
5V PUC
5V PUD
5V PUE
5V PUF
5V PUG
5V PUH
5V PUJ
5V PUK
5V PUL
5V PUM
5V PUN
5V PUP
5V PUR
5V PUS
5V PUT
5V PUU
5V PUV
5V PUW
5V PUX
5V PUY
5V PUZ
5V PV0
5V PV1
5V PV2
5V PV3
5V PV4
5V PV5
5V PV6
5V PV7
5V PV8
5V PV9
5V PVA
5V PVB
5V PVC
5V PVD
5V PVE
5V PVF
5V PVG
5V PVH
5V PVJ
5V PVK
5V PVL
5V PVM
5V PVN
5V PVP
5V PVR
5V PVS
5V PVT
5V PVU
5V PVV
5V PVW
5V PVX
5V PVY
5V PVZ
5V PW0
5V PW1
5V PW2
5V PW3
5V PW4
5V PW5
5V PW6
5V PW7
5V PW8
5V PW9
5V PWA
5V PWB
5V PWC
5V PWD
5V PWE
5V PWF
5V PWG
5V PWH
5V PWJ
5V PWK
5V PWL
5V PWM
5V PWN
5V PWP
5V PWR
5V PWS
5V PWT
5V PWU
5V PWV
5V PWW
5V PWX
5V PWY
5V PWZ
5V PX0
5V PX1
5V PX2
5V PX3
5V PX4
5V PX5
5V PX6
5V PX7
5V PX8
5V PX9
5V PXA
5V PXB
5V PXC
5V PXD
5V PXE
5V PXF
5V PXG
5V PXH
5V PXJ
5V PXK
5V PXL
5V PXM
5V PXN
5V PXP
5V PXR
5V PXS
5V PXT
5V PXU
5V PXV
5V PXW
5V PXX
5V PXY
5V PXZ
5V PY0
5V PY1
5V PY2
5V PY3
5V PY4
5V PY5
5V PY6
5V PY7
5V PY8
5V PY9
5V PYA
5V PYB
5V PYC
5V PYD
5V PYE
5V PYF
5V PYG
5V PYH
5V PYJ
5V PYK
5V PYL
5V PYM
5V PYN
5V PYP
5V PYR
5V PYS
5V PYT
5V PYU
5V PYV
5V PYW
5V PYX
5V PYY
5V PYZ
5V PZ0
5V PZ1
5V PZ2
5V PZ3
5V PZ4
5V PZ5
5V PZ6
5V PZ7
5V PZ8
5V PZ9
5V PZA
5V PZB
5V PZC
5V PZD
5V PZE
5V PZF
5V PZG
5V PZH
5V PZJ
5V PZK
5V PZL
5V PZM
5V PZN
5V PZP
5V PZR
5V PZS
5V PZT
5V PZU
5V PZV
5V PZW
5V PZX
5V PZY
5V PZZ
5V P10
5V P11
5V P12
5V P13
5V P14
5V P15
5V P16
5V P17
5V P18
5V P19
5V P1A
5V P1B
5V P1C
5V P1D
5V P1E
5V P1F
5V P1G
5V P1H
5V P1J
5V P1K
5V P1L
5V P1M
5V P1N
5V P1P
5V P1R
5V P1S
5V P1T
5V P1U
5V P1V
5V P1W
5V P1X
5V P1Y
5V P1Z
5V P20
5V P21
5V P22
5V P23
5V P24
5V P25
5V P26
5V P27
5V P28
5V P29
5V P2A
5V P2B
5V P2C
5V P2D
5V P2E
5V P2F
5V P2G
5V P2H
5V P2J
5V P2K
5V P2L
5V P2M
5V P2N
5V P2P
5V P2R
5V P2S
5V P2T
5V P2U
5V P2V
5V P2W
5V P2X
5V P2Y
5V P2Z
5V P30
5V P31
5V P32
5V P33
5V P34
5V P35
5V P36
5V P37
5V P38
5V P39
5V P3A
5V P3B
5V P3C
5V P3D
5V P3E
5V P3F
5V P3G
5V P3H
5V P3J
5V P3K
5V P3L
5V P3M
5V P3N
5V P3P
5V P3R
5V P3S
5V P3T
5V P3U
5V P3V
5V P3W
5V P3X
5V P3Y
5V P3Z
5V P40
5V P41
5V P42
5V P43
5V P44
5V P45
5V P46
5V P47
5V P48
5V P49
5V P4A
5V P4B
5V P4C
5V P4D
5V P4E
5V P4F
5V P4G
5V P4H
5V P4J
5V P4K
5V P4L
5V P4M
5V P4N
5V P4P
5V P4R
5V P4S
5V P4T
5V P4U
5V P4V
5V P4W
5V P4X
5V P4Y
5V P4Z
5V P50
5V P51
5V P52
5V P53
5V P54
5V P55
5V P56
5V P57
5V P58
5V P59
5V P5A
5V P5B
5V P5C
5V P5D
5V P5E
5V P5F
5V P5G
5V P5H
5V P5J
5V P5K
5V P5L
5V P5M
5V P5N
5V P5P
5V P5R
5V P5S
5V P5T
5V P5U
5V P5V
5V P5W
5V P5X
5V P5Y
5V P5Z
5V P60
5V P61
5V P62
5V P63
5V P64
5V P65
5V P66
5V P67
5V P68
5V P69
5V P6A
5V P6B
5V P6C
5V P6D
5V P6E
5V P6F
5V P6G
5V P6H
5V P6J
5V P6K
5V P6L
5V P6M
5V P6N
5V P6P
5V P6R
5V P6S
5V P6T
5V P6U
5V P6V
5V P6W
5V P6X
5V P6Y
5V P6Z
5V P70
5V P71
5V P72
5V P73
5V P74
5V P75
5V P76
5V P77
5V P78
5V P79
5V P7A
5V P7B
5V P7C
5V P7D
5V P7E
5V P7F
5V P7G
5V P7H
5V P7J
5V P7K
5V P7L
5V P7M
5V P7N
5V P7P
5V P7R
5V P7S
5V P7T
5V P7U
5V P7V
5V P7W
5V P7X
5V P7Y
5V P7Z
5V P80
5V P81
5V P82
5V P83
5V P84
5V P85
5V P86
5V P87
5V P88
5V P89
5V P8A
5V P8B
5V P8C
5V P8D
5V P8E
5V P8F
5V P8G
5V P8H
5V P8J
5V P8K
5V P8L
5V P8M
5V P8N
5V P8P
5V P8R
5V P8S
5V P8T
5V P8U
5V P8V
5V P8W
5V P8X
5V P8Y
5V P8Z
5V P90
5V P91
5V P92
5V P93
5V P94
5V P95
5V P96
5V P97
5V P98
5V P99
5V P9A
5V P9B
5V P9C
5V P9D
5V P9E
5V P9F
5V P9G
5V P9H
5V P9J
5V P9K
5V P9L
5V P9M
5V P9N
5V P9P
5V P9R
5V P9S
5V P9T
5V P9U
5V P9V
5V P9W
5V P9X
5V P9Y
5V P9Z
5V PA0
5V PA1
5V PA2
5V PA3
5V PA4
5V PA5
5V PA6
5V PA7
5V PA8
5V PA9
5V PAA
5V PAB
5V PAC
5V PAD
5V PAE
5V PAF
5V PAG
5V PAH
5V PAJ
5V PAK
5V PAL
5V PAM
5V PAN
5V PAP
5V PAR
5V PAS
5V PAT
5V PAU
5V PAV
5V PAW
5V PAX
5V PAY
5V PAZ
5V PB0
5V PB1
5V PB2
5V PB3
5V PB4
5V PB5
5V PB6
5V PB7
5V PB8
5V PB9
5V PBA
5V PBB
5V PBC
5V PBD
5V PBE
5V PBF
5V PBG
5V PBH
5V PBJ
5V PBK
5V PBL
5V PBM
5V PBN
5V PBP
5V PBR
5V PBS
5V PBT
5V PBU
5V PBV
5V PBW
5V PBX
5V PBY
5V PBZ
5V PC0
5V PC1
5V PC2
5V PC3
5V PC4
5V PC5
5V PC6
5V PC7
5V PC8
5V PC9
5V PCA
5V PCB
5V PCC
5V PCD
5V PCE
5V PCF
5V PCG
5V PCH
5V PCJ
5V PCK
5V PCL
5V PCM
5V PCN
5V PCP
5V PCR
5V PCS
5V PCT
5V PCU
5V PCV
5V PCW
5V PC

Vehicle

JUMPER

Data

New

Domain

Protections And Doors

Function

Electric Window

Function Diagram

Principle

Wiring

Installation

9C- 06/10/2013

SVG Viewer

Tools

History

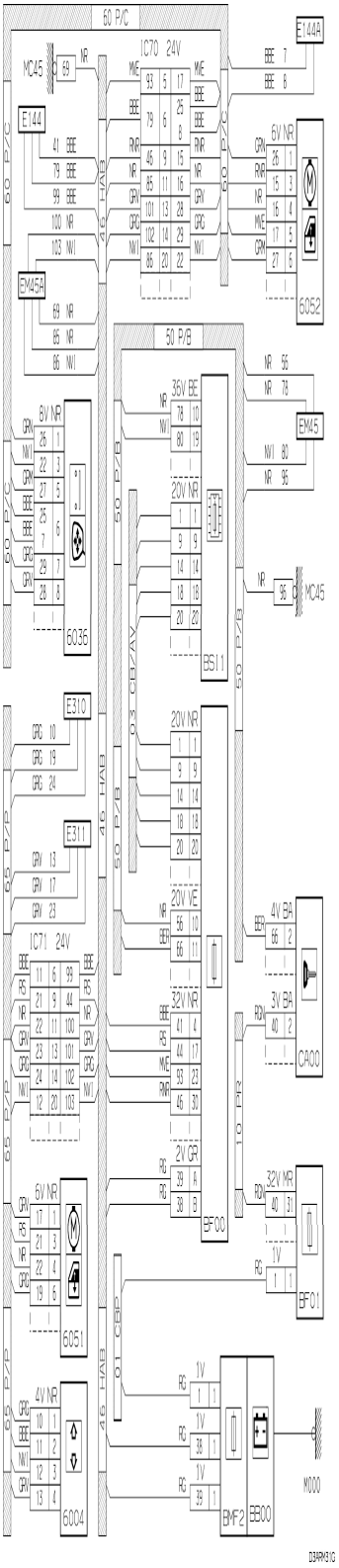
60 P/C
IC70 24V
E144A
MC45
E144
EM45A
6052
50 P/B
EM45
6036
BS11
E310
E311
IC71 24V
CA00
BF00
BF01
6051
6004
BMF2
BB00
M000
D3ARM31G

Vehicle

JUMPER

Data

New

Domain

Protections And Doors

Function

Electric Window

Function Diagram

Principle

Wiring

Installation

9C- 06/10/2013

SVG Viewer

Tools

History

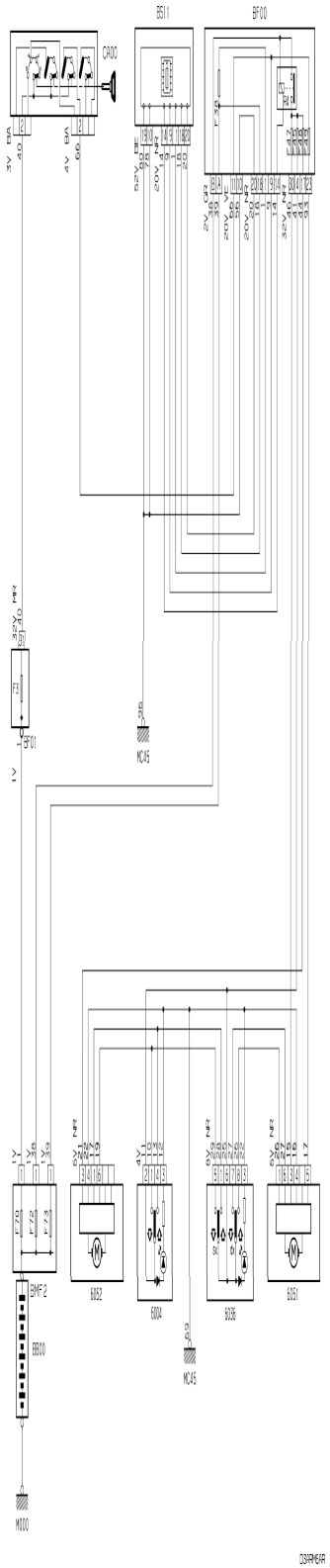
BS11
BF00
CA00
BF01
MC45
BMF2
BB00
MC45
M000

Vehicle

JUMPER

Data

New

Domain

Driving Assistance

Function

Electronically Managed Suspension

Function Diagram

Principle

Wiring

Installation

9C- 06/10/2013

SVG Viewer

Tools

History


32 SUSP
45 HAC
7713
71G ARVG
7714
1C45A
1D45B
15VAR
7715
2V
EM61
BF00
32VAR
2VAR
2VGR
1D45A
1C45
EM55
MC51
MC55
BS11
7772
BMF2
6V BA
5V BA
8V BA
BCM2
45 HAB
E172
E179
C
A
B
10 PR
50 PVS
BS11
BF00 20V CA00
45 HAB
10 PR
BF01
32VAR
C
A
B

D3ARKSL1

Vehicle

JUMPER

Data

New

Domain

Driving Assistance

Function

Electronically Managed Suspension

Function Diagram

Principle

Wiring

Installation

9C- 06/10/2013

SVG Viewer

Tools

History

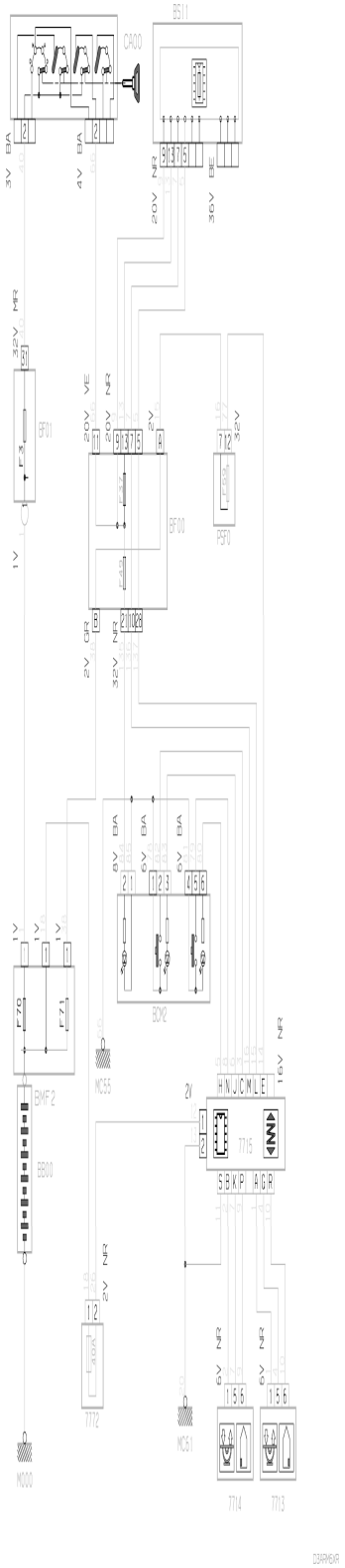
BS11
CA00
BF01
BF00
PSF0
BCM2
BMF2
BB00
MC55
MC61
MC00
7715
7714
7713
7772
D3ARM6AR

Vehicle

JUMPER

Data

New

Domain

Instruments And Controls

Function

Electrically Controlled Mirrors

Function Diagram

Principle

Wiring

Installation

9C- 06/10/2013

SVG Viewer

Tools

History

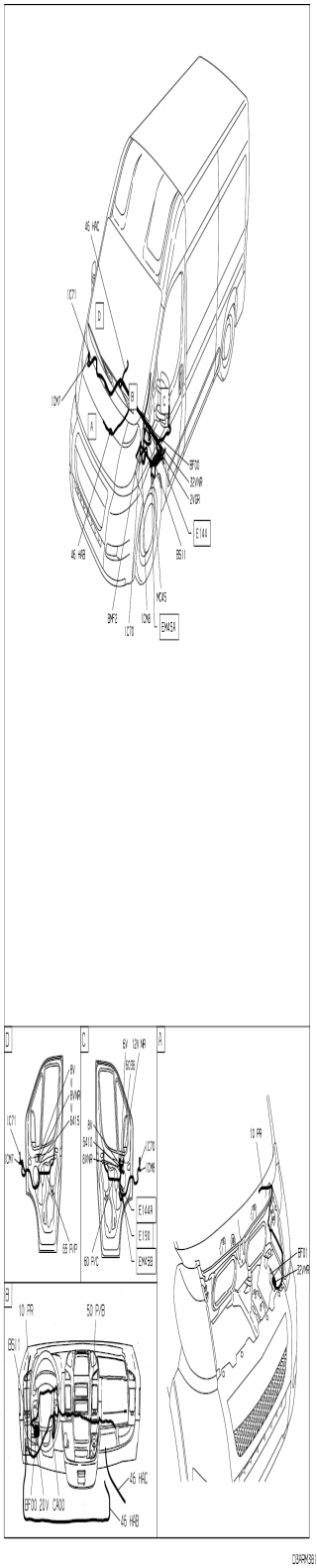
45 HAC
1C71
D
1CN7
B
A
BF00
32VNR
2VGR
E144
BS11
45 HAB
MCA5
BMF2
1C70
1CN8
EM45A
D
C
A
6V 12V NR
1C71
1CN7
65 PVP
60 PVC
E144A
E150
EM45B
10 PR
BF01
32VNR
B
10 PR
50 PVB
BS11
45 HAC
BF00 20V CA00
45 HAB

D3ARM381

Vehicle

JUMPER

Data

New

Domain

Driving Assistance

Function

Electronically Managed Suspension

Function Diagram

Principle

Wiring

Installation

9C- 06/10/2013

SVG Viewer

Tools

History

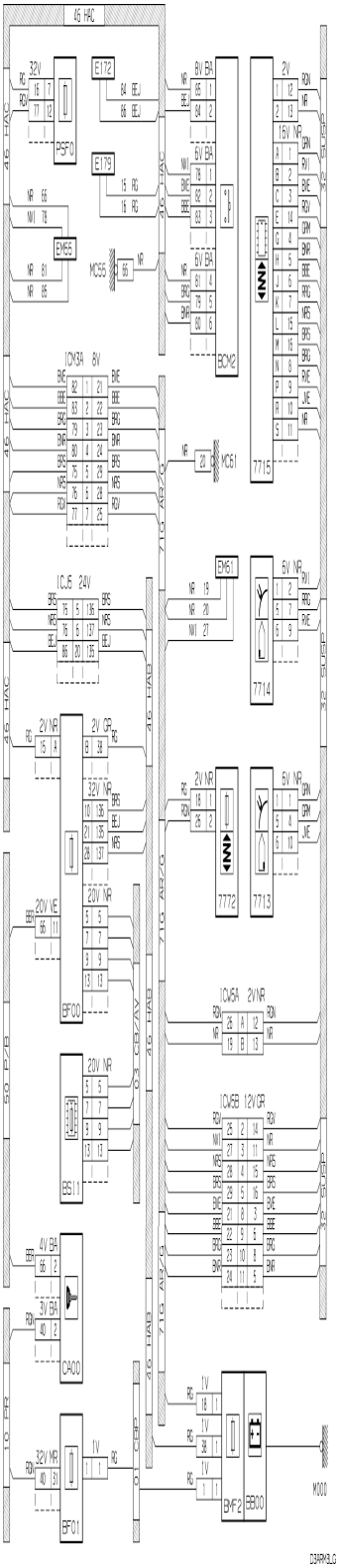
45 HAC
32V
PSF0
E172
E179
EM65
MC55
8V BA
6V BA
BCM2
2V
16V NR
7715
ICM3A 8V
MC61
ICJ5 24V
EM61
5V NR
7714
2V NR
2V GR
32V NR
20V NR
BF00
7772
7713
ICM5A 2V NR
ICM5B 12V GR
BSI1
4V BA
3V BA
CA00
1V
32V NR
BF01
BMF2
BB00
M000
D3ARM3LG

Vehicle

JUMPER
Data
New

Domain

General Points

Function

Allocation Of BF01 Fuses

Function Diagram

General

9C- 06/10/2013

SVG Viewer
Tools
History

D3B0I9P0	ENGINE COMPARTMENT FUSE BOX (BF01)

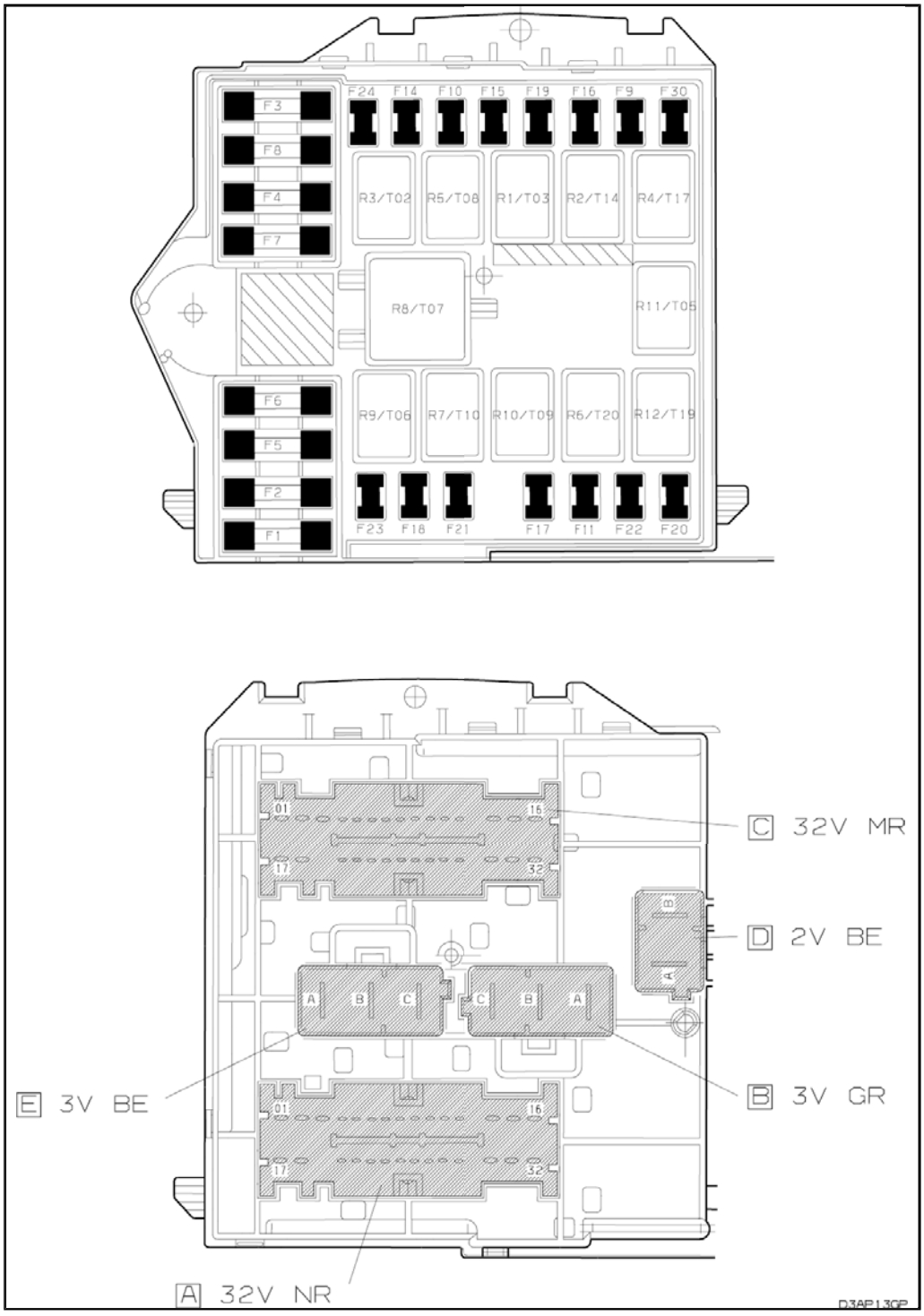

fig. d3ap13gp

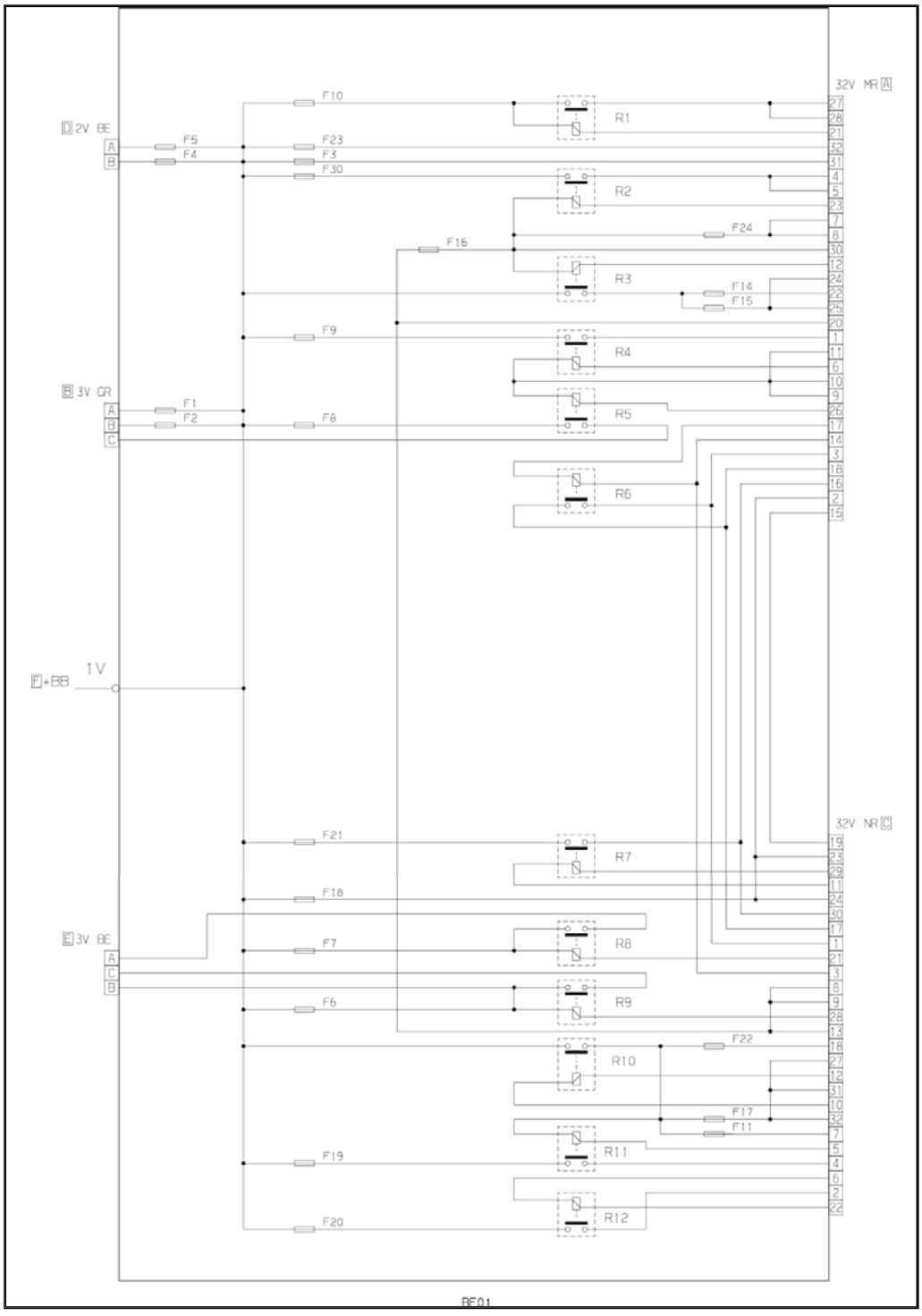

fig. d3ap27cp

23 fuse box (BF01)		
fuses	A	matching
F1	40A	ABS hydraulic pump supply - ESP hydraulic pump supply
F2	50A	pre-postheating control unit
F3	30A	ignition switch

F4	20A	additional/autonomous heating burner
F5		additional/autonomous heating control relay
F6	40/60A	fast speed cooling fan control
F7	40/50A	slow speed cooling fan control
F8	40A	air conditioning system
F9	20A	windscreen wash pump
F10	15A	horn
F11		pre-postheating control unit - diesel heater relay
F14	7,5A	RH main beam
F15		LH main beam
F16	7,5A	Engine management ECU (15/54)
F17	10A	Engine management ECU
F18	7,5A	Engine management ECU
F19		air conditioning compressor
F20	30A	headlamp wash pump
F21	15A	fuel pump supply
F22	20A	Engine management ECU
F23	30A	supply of ABS hydraulic valve block electrovalve - supply of ESP hydraulic valve block electrovalve
F24	15A	free
F30		rear fog lamps

location of relays in passenger compartment (BF01)	
reference	matching
R1	horn relay
R2	front fog lamp relay
R3	main beam relay
R4	windscreen wash pump relay
R5	refrigerated air system relay
R6	free
R7	fuel pump relay
R8	low speed fan supply relay
R9	high speed fan supply relay
R10	engine ECU relay
R11	air conditioning compressor relay
R12	headlamp wash pump relay

Vehicle

JUMPER

Data

New

Domain

Power Unit

Function

Engine Speed Information

Function Diagram

Principle

Wiring

Installation

9C- 06/10/2013

SVG Viewer

Tools

History

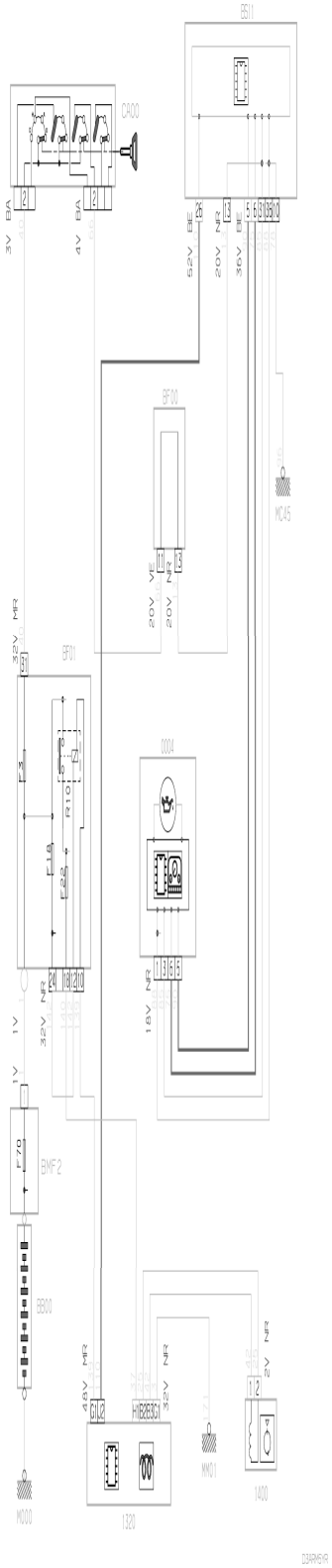

Vehicle

JUMPER

Data

New

Domain

Driver Information

Function

Engine Coolant And
Other Information

Function Diagram

Principle

Principle

Principle

Wiring

Wiring

Wiring

Installation

Installation

Installation

9C- 06/10/2013

SVG Viewer

Tools

History

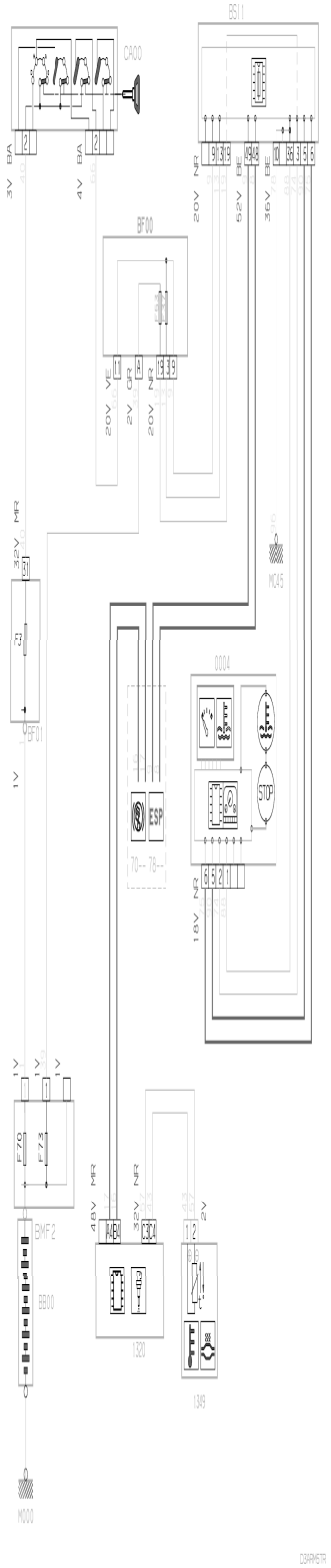
BS11
CA00
BF00
MC45
0004
ESP
STOP
BF01
BMF2
BB00
1320
1349
M000

Vehicle

JUMPER

Data

New

Domain

Power Unit

Function

Engine Cooling

Function Diagram

Principle

Principle

Principle

Wiring

Wiring

Wiring

Installation

Installation

Installation

9C- 06/10/2013

SVG Viewer

Tools

History

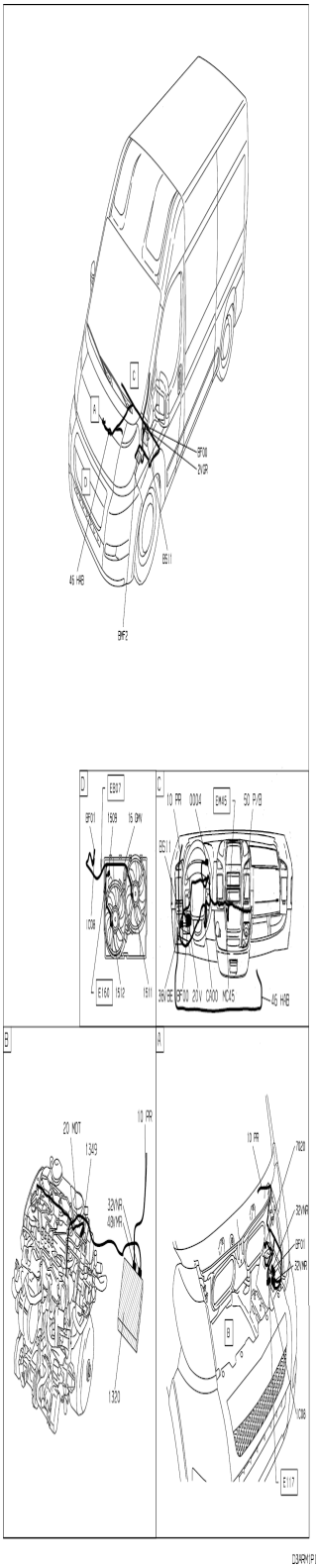
C
A
D
BF00
2VGR
BS11
45 HAB
BHF2
D
EB07
BF01
1509
15 GRN
1C08
E160
1512
1511
C
10 PR
0004
EM45
50 P/B
BS11
38VBE
BF00
20V
CA00
NC45
45 HAB
B
20 MOT
1349
10 PR
32VNR
48VNR
1320
A
10 PR
7020
32VNR
BF01
32VNR
B
1C08
E117

D3ARM1P1

Vehicle

JUMPER

Data

New

Domain

Power Unit

Function

Engine Cooling

Function Diagram

Principle

Principle

Principle

Wiring

Wiring

Wiring

Installation

Installation

Installation

9C- 06/10/2013

SVG Viewer

Tools

History

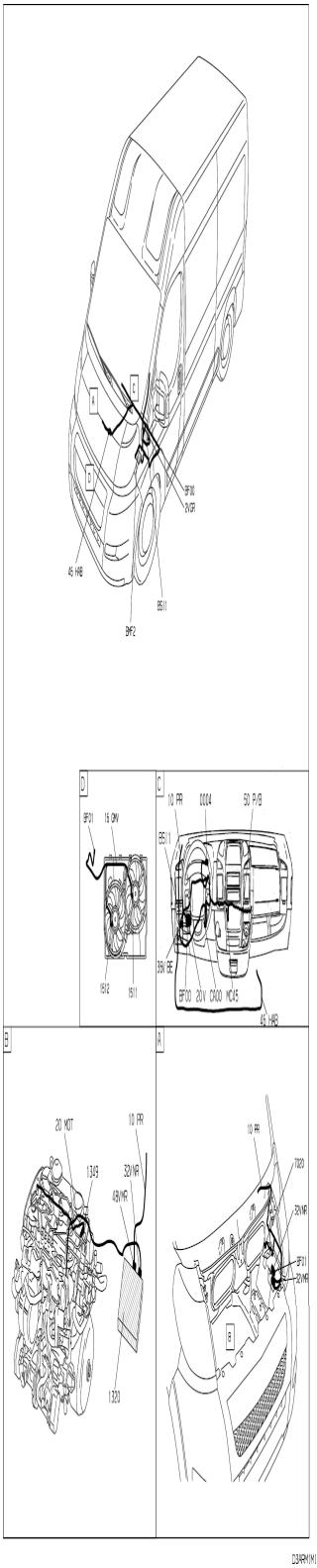
A
B
C
D
BF00
2VGR
45 HAB
B511
BMF2
BF01
15 OMV
1512
1511
10 PR
0004
50 P/B
B511
35N BE
BF00
20V
CR00
MC45
45 HAB
20 MOT
10 PR
1349
32VNR
48VNR
1320
10 PR
7020
32VNR
BF01
32VNR

D3ARM1M1

Vehicle

JUMPER

Data

New

Domain

Power Unit

Function

Engine Cooling

Function Diagram

Principle

Principle

Principle

Wiring

Wiring

Wiring

Installation

Installation

Installation

9C- 06/10/2013

SVG Viewer

Tools

History

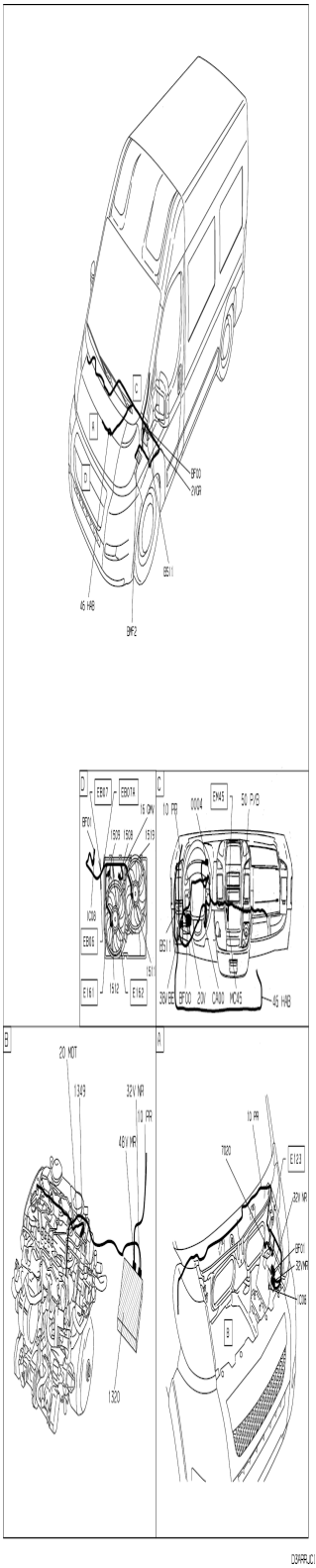
BF00
2VGR
BS11
45 HAB
BMF2
EB07
EB07A
15 GMV
BF01
1509
1508
1519
1C08
EB06
1511
E161
1512
E162
10 PR
0004
EM45
50 PVB
BS11
38VBE
BF00
20V
CA00
MC45
45 HAB
20 MOT
1349
32V NR
10 PR
48V NR
1320
10 PR
7020
E123
22V NR
BF01
32VNR
1C08

D3APRJC1

Vehicle

JUMPER

Data

New

Domain

Power Unit

Function

Engine Starting

Function Diagram

Principle

Wiring

Installation

9C- 06/10/2013

SVG Viewer

Tools

History

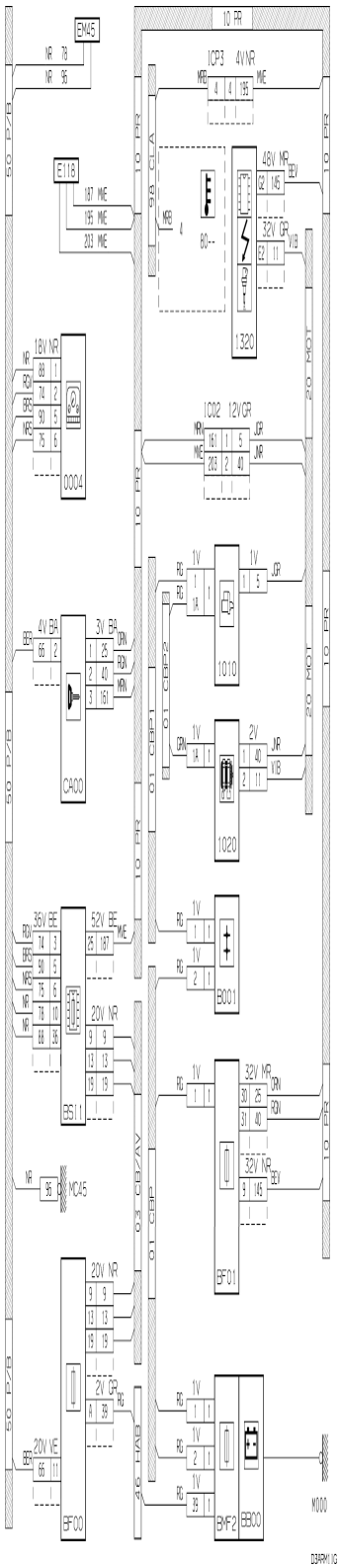
10 PR
EM45
NR 78
NR 96
ICP3 4VNR
E118
187 MVE
195 MVE
203 MVE
48V NR
32V GR
1320
18V NR
0004
IC02 12VGR
4V BA
3V BA
CA00
1010
1020
36V BE
52V BE
20V NR
BS11
B001
32V NR
BF01
MC45
20V NR
2V GR
20V VE
BF00
BMF2
BB00
M000
50 P/R
10 PR
20 MOT
03 CB/AV
46 HAB
D3ARM1.IG

Vehicle

JUMPER

Data

New

Domain

Power Unit

Function

Engine Starting

Function Diagram

Principle

Wiring

Installation

9C- 06/10/2013

SVG Viewer

Tools

History

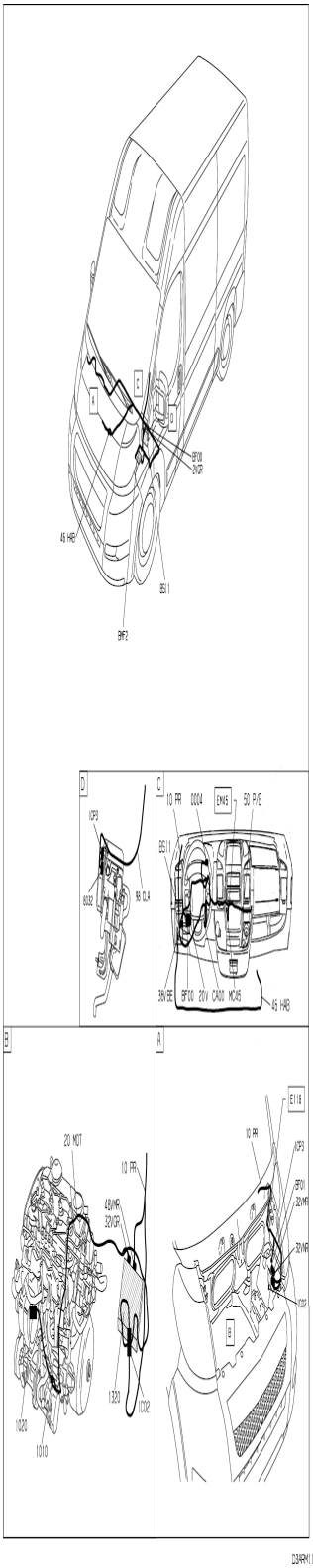
A
C
D
BF00
20VGR
45 HRB
BS11
BMF2
D
VCP3
8032
96 CLA
C
10 PR
0004
EM45
50 P/B
BS11
3BA/BE
BF00
20V
CA00
MCA5
45 HRB
B
20 MOT
10 PR
48VMR
32VGR
1320
1C02
1020
1010
A
E116
10 PR
VCP3
BF01
32VMR
32VMR
1C02
B

D3ARM111

Vehicle

JUMPER

Data

New

Domain

Driver Information

Function

Engine Coolant And
Other Information

Function Diagram

Principle

Principle

Principle

Wiring

Wiring

Wiring

Installation

Installation

Installation

9C- 06/10/2013

SVG Viewer

Tools

History

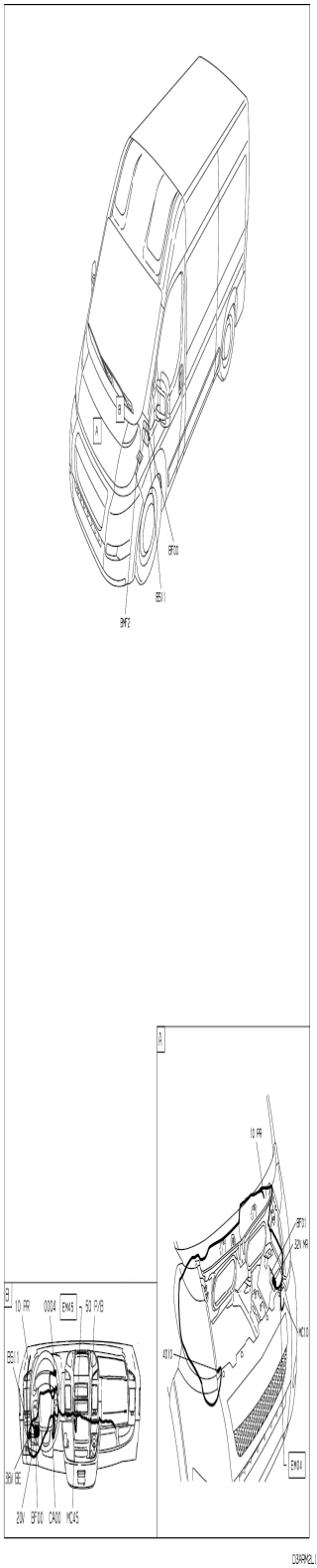
BF00
BS11
BMF2
10 PR
BF01
32N MR
MC10
4010
EM04
10 PR
0004
EM45
50 PVB
BS11
36V BE
20V
BF00
CA00
MC45

DIAGRAM2.1

Vehicle

JUMPER

Data

New

Domain

Driver Information

Function

Engine Coolant And
Other Information

Function Diagram

Principle

Principle

Principle

Wiring

Wiring

Wiring

Installation

Installation

Installation

9C- 06/10/2013

SVG Viewer

Tools

History

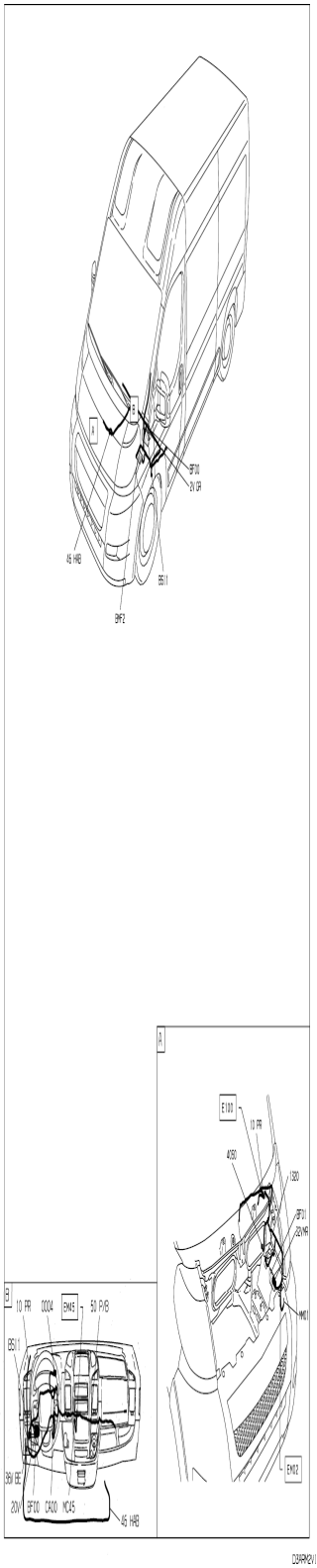
A
B
BF00
21 GR
45 HAB
BS11
BMF2
E100
10 PR
4050
1320
BF01
22 VR
MM01
EM02
10 PR
0004
EM45
50 PYB
BS11
36V GE
20V
BF00
CA00
MC45
45 HAB

D3ARM2V1

Vehicle

JUMPER

Data

New

Domain

Driver Information

Function

Engine Coolant And
Other Information

Function Diagram

Principle

Principle

Principle

Wiring

Wiring

Wiring

Installation

Installation

Installation

9C- 06/10/2013

SVG Viewer

Tools

History

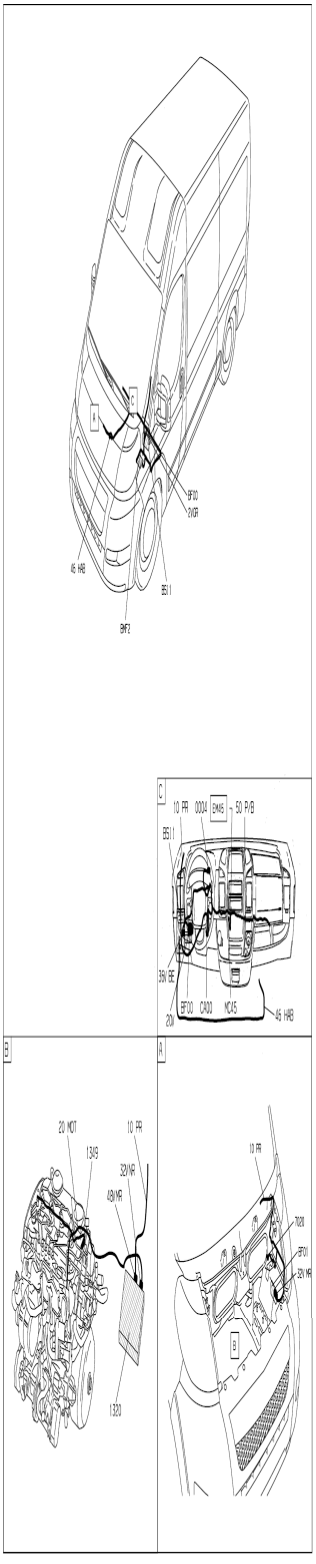
BF00
2VGR
45 HRB
B511
BMF2
C
10 PR
0004
EM45
50 P/B
B511
35N BE
20N
BF00
CA00
NC45
45 HRB
B
20 MOT
1349
10 PR
32VNR
48VNR
1320
A
10 PR
7020
BF01
32VNR
B

D3ARN2J1

Vehicle

JUMPER

Data

New

Domain

Driver Information

Function

Engine Coolant And
Other Information

Function Diagram

Principle

Principle

Principle

Wiring

Wiring

Wiring

Installation

Installation

Installation

9C- 06/10/2013

SVG Viewer

Tools

History

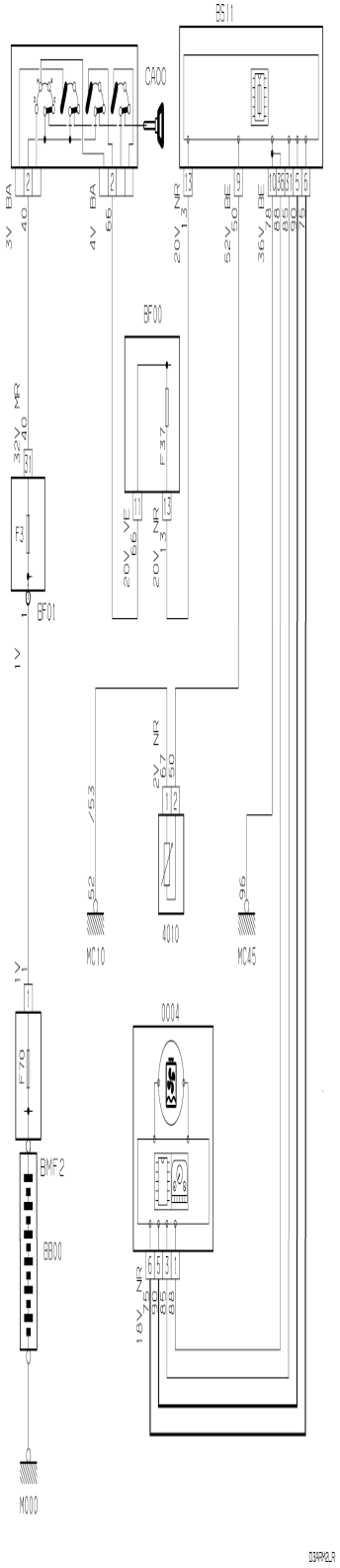
BS11
CH00
BF00
BF01
MC10
MC45
4010
0004
BMF2
BB00
MC00

Vehicle

JUMPER

Data

New

Domain

Driver Information

Function

Engine Coolant And
Other Information

Function Diagram

Principle

Principle

Principle

Wiring

Wiring

Wiring

Installation

Installation

Installation

9C- 06/10/2013

SVG Viewer

Tools

History

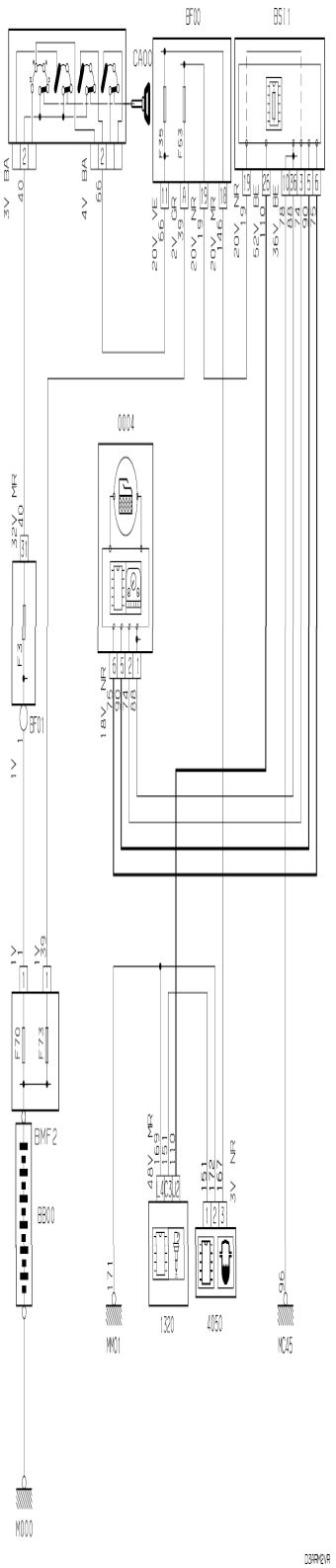
BF00
BS11
CA00
0004
BF01
BMF2
BB00
1320
4050
MM01
MC45
M000

Vehicle

JUMPER

Data

New

Domain

Driver Information

Function

Engine Coolant And
Other Information

Function Diagram

Principle

Principle

Principle

Wiring

Wiring

Wiring

Installation

Installation

Installation

9C- 06/10/2013

SVG Viewer

Tools

History

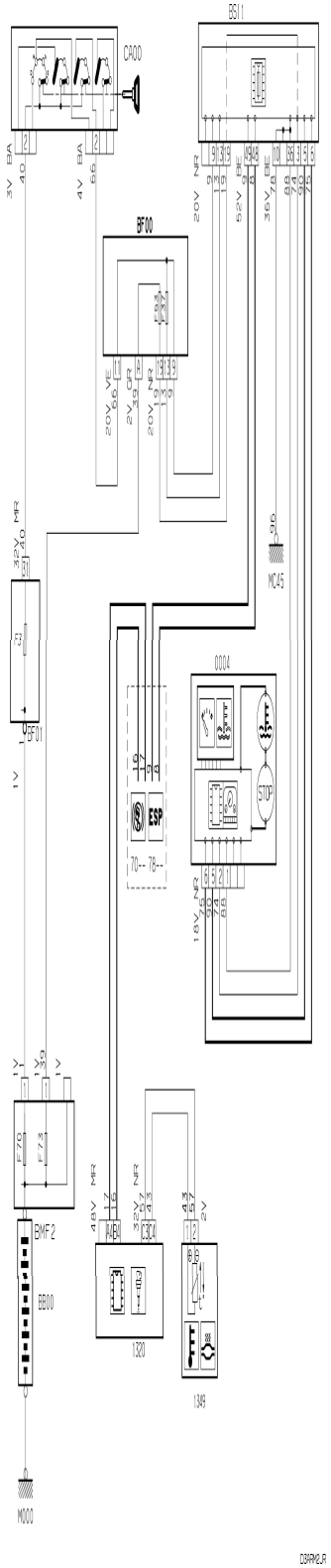
BS11
CA00
BF00
BF01
MC45
0004
STOP
ESP
BMF2
BB00
1320
1349
M000
D3FM2.R

Vehicle

JUMPER

Data

New

Domain

Power Unit

Function

Engine Cooling

Function Diagram

Principle

Principle

Principle

Wiring

Wiring

Wiring

Installation

Installation

Installation

9C- 06/10/2013

SVG Viewer

Tools

History

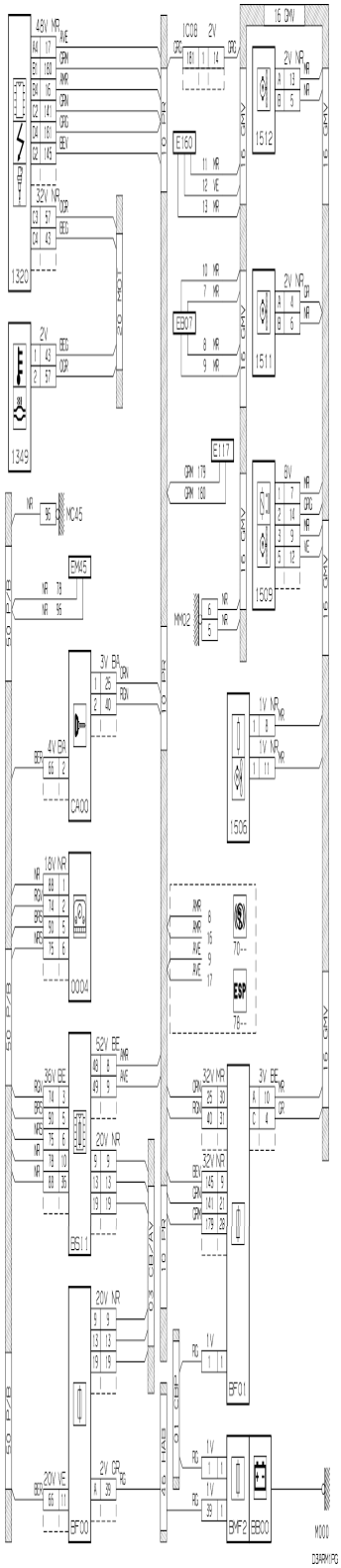

Vehicle

JUMPER

Data

New

Domain

Power Unit

Function

Engine Cooling

Function Diagram

Principle

Principle

Principle

Wiring

Wiring

Wiring

Installation

Installation

Installation

9C- 06/10/2013

SVG Viewer

Tools

History

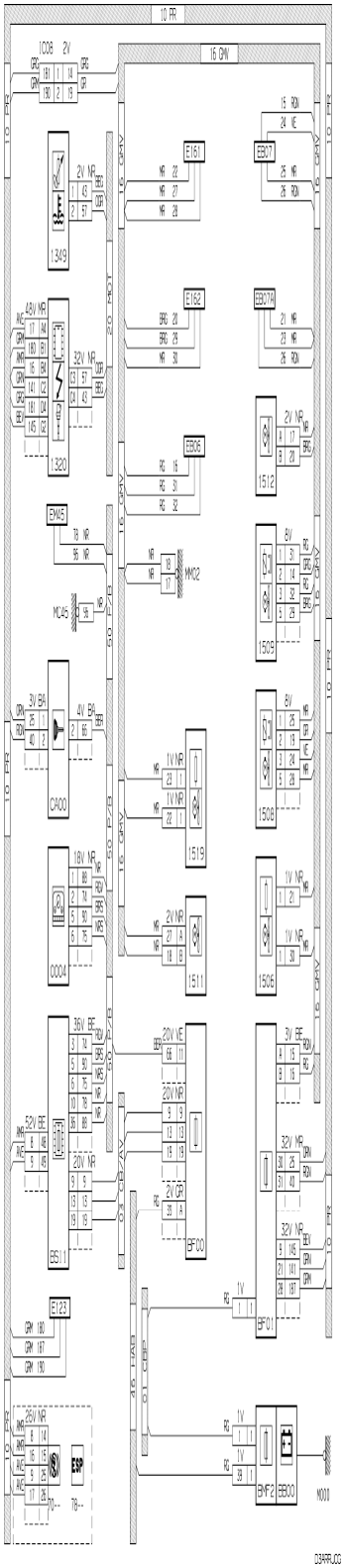

Vehicle

JUMPER

Data

New

Domain

Driver Information

Function

Engine Coolant And
Other Information

Function Diagram

Principle

Principle

Principle

Wiring

Wiring

Wiring

Installation

Installation

Installation

9C- 06/10/2013

SVG Viewer

Tools

History

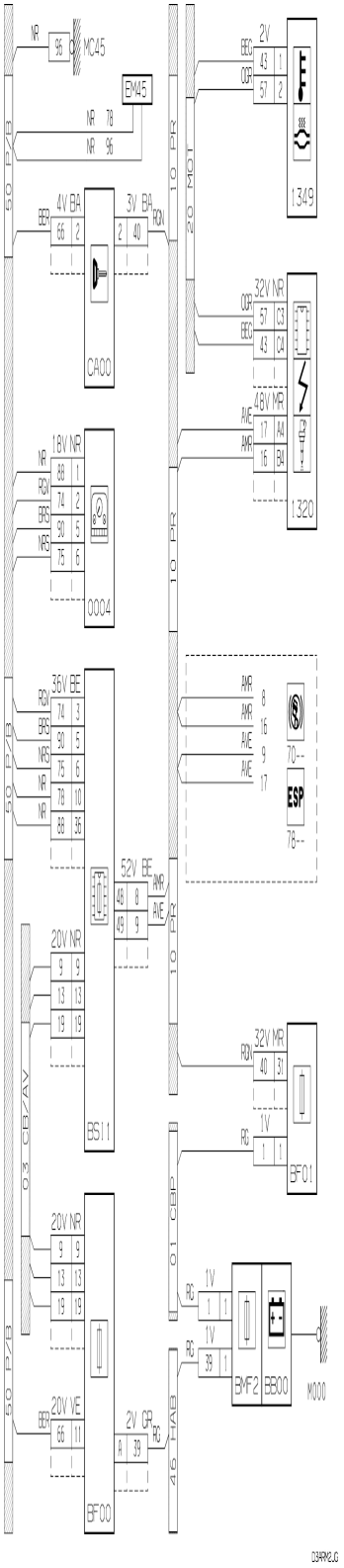
MC45
EM45
CA00
0004
BS11
BF00
BF01
BMF2
BB00
M000
1349
1320
ESP
50 P/B
10 PR
20 MOT
03 CB/AV
01 CBP
46 HAB
D3ARM2.G

Vehicle

JUMPER

Data

New

Domain

Driver Information

Function

Engine Coolant And
Other Information

Function Diagram

Principle

Principle

Principle

Wiring

Wiring

Wiring

Installation

Installation

Installation

9C- 06/10/2013

SVG Viewer

Tools

History

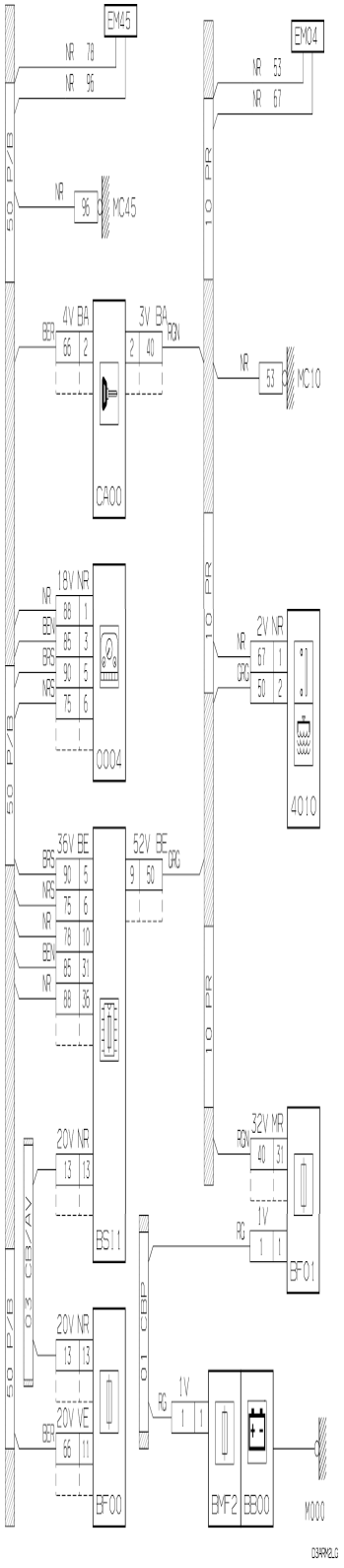
EM45
EM04
NR 78
NR 96
NR 53
NR 67
50 P/B
10 PR
MC45
4V BA
3V BA
BER
RGN
MC10
CA00
18V NR
2V NR
0004
4010
36V BE
52V BE
20V NR
32V MR
BSI1
BF01
03 CB/AV
01 CBP
20V VE
BF00
BMF2
BB00
M000
D3ARM2.G

Vehicle

JUMPER

Data

New

Domain

Power Unit

Function

Engine Cooling

Function Diagram

Principle

Principle

Principle

Wiring

Wiring

Wiring

Installation

Installation

Installation

9C- 06/10/2013

SVG Viewer

Tools

History

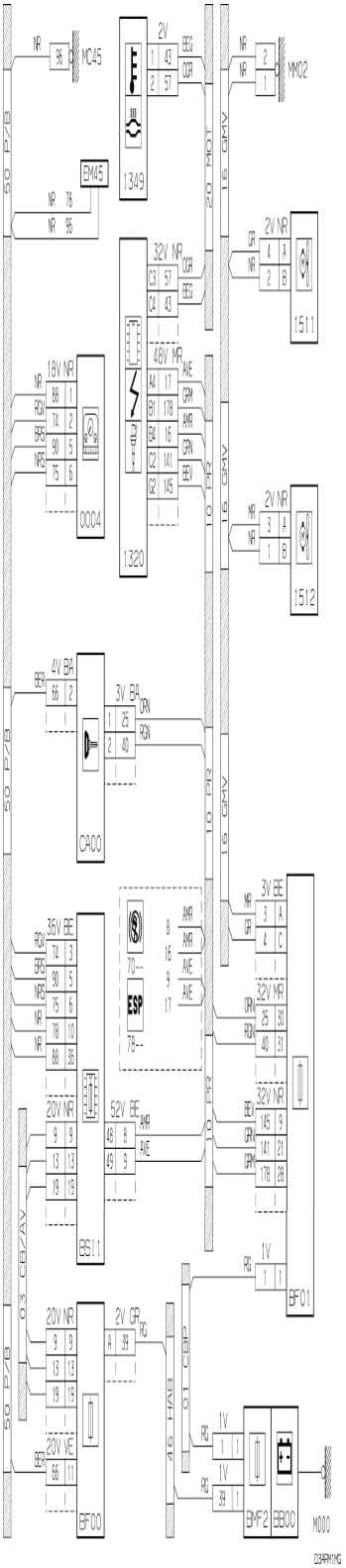
MC45
MM02
EM45
1349
1320
1511
1512
0004
CA00
BSI1
BF00
BF01
BMF2
BB00
M000
ESP
50 P/B
20 MOT
16 GMV
10 PR
03 CB/AV
46 HAB
01 CBP
03ARM1MG

Vehicle

JUMPER

Data

New

Domain

Driver Information

Function

Engine Coolant And
Other Information

Function Diagram

Principle

Principle

Principle

Wiring

Wiring

Wiring

Installation

Installation

Installation

9C- 06/10/2013

SVG Viewer

Tools

History

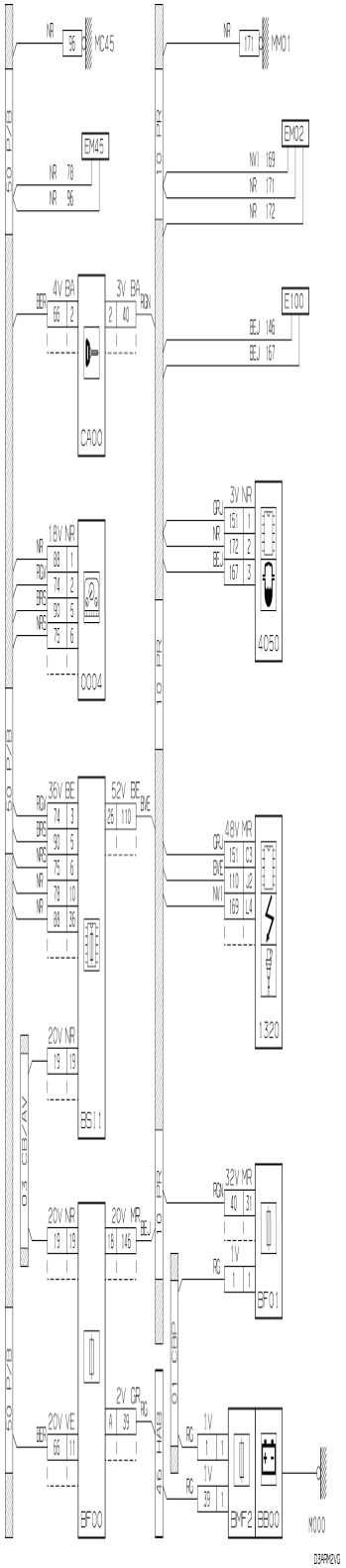
MC45
MM01
EM45
EM02
E100
CA00
0004
4050
BS11
1320
BF00
BF01
BMF2
BB00
M000
D3ARM2VG

Vehicle

JUMPER

Data

New

Domain

Power Unit

Function

Engine Cooling

Function Diagram

Principle

Principle

Principle

Wiring

Wiring

Wiring

Installation

Installation

Installation

9C- 06/10/2013

SVG Viewer

Tools

History

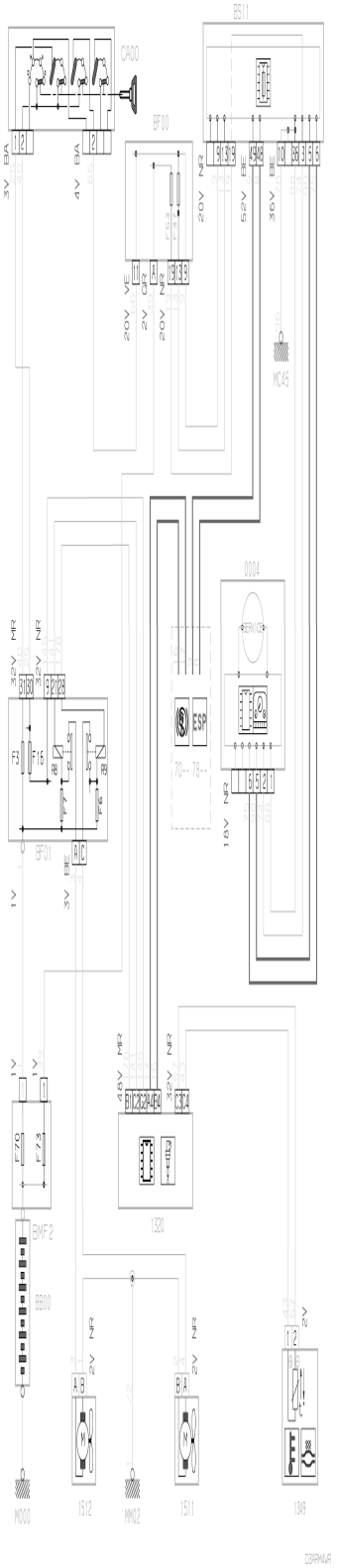
BS11
CA00
BF00
MC45
0004
ESP
BF01
BMF2
BB00
1320
1512
1511
1349
MC00
MM02

Vehicle

JUMPER

Data

New

Domain

Power Unit

Function

Electronic Injection

Function Diagram

Principle

Wiring

Installation

9C- 06/10/2013

SVG Viewer

Tools

History

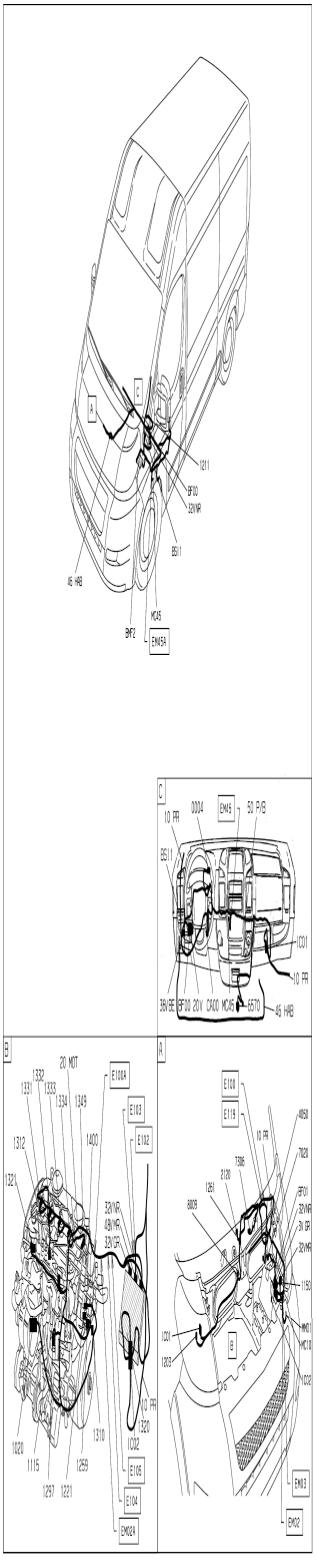
A
C
1211
BF00
32VAR
BS11
45 HAB
BMF2
MC45
EM45A
C
10 PR
0004
EM45
50 PVB
BS11
1C01
10 PR
3BA/BE
BF00
20V
CA00
MC45
6570
45 HAB
B
20 MOT
1332
1331
1333
1334
1349
1400
1312
1321
E100A
E103
E102
32VAR
4BVAR
32VGR
10 PR
1320
1C02
1020
1115
1297
1221
1259
1310
E105
E104
EM024
A
E100
E119
10 PR
7305
2120
1261
8009
4050
7020
BF01
32VAR
3V GR
32VAR
1150
1C01
1203
B
MM01
MC10
1C02
EM03
EM02
D3C257K1

Vehicle

JUMPER

Data

New

Domain

Power Unit

Function

Electronic Injection

Function Diagram

Principle

Wiring

Installation

9C- 06/10/2013

SVG Viewer

Tools

History

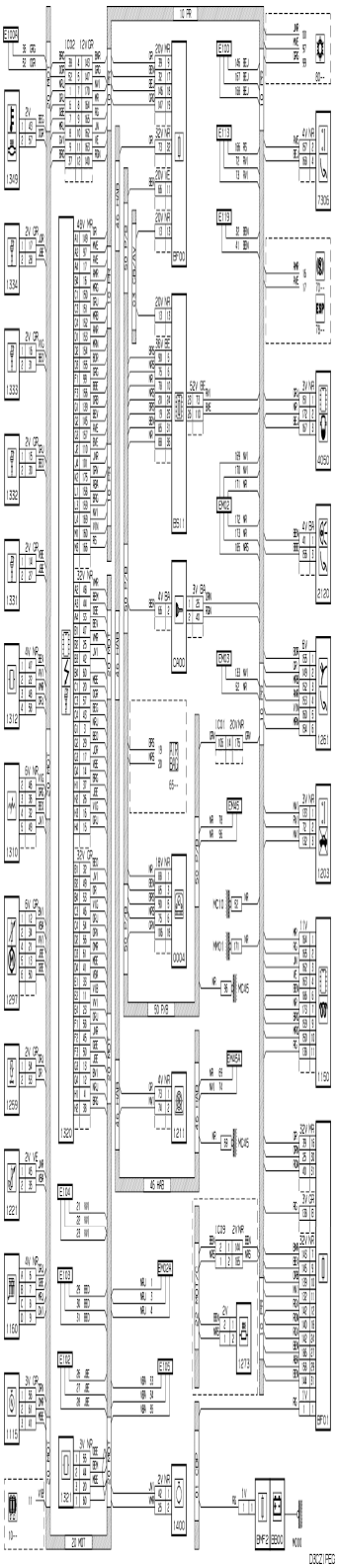

Vehicle

JUMPER

Data

New

Domain

Power Unit

Function

Electronic Injection

Function Diagram

Principle

Wiring

Installation

9C- 06/10/2013

SVG Viewer

Tools

History

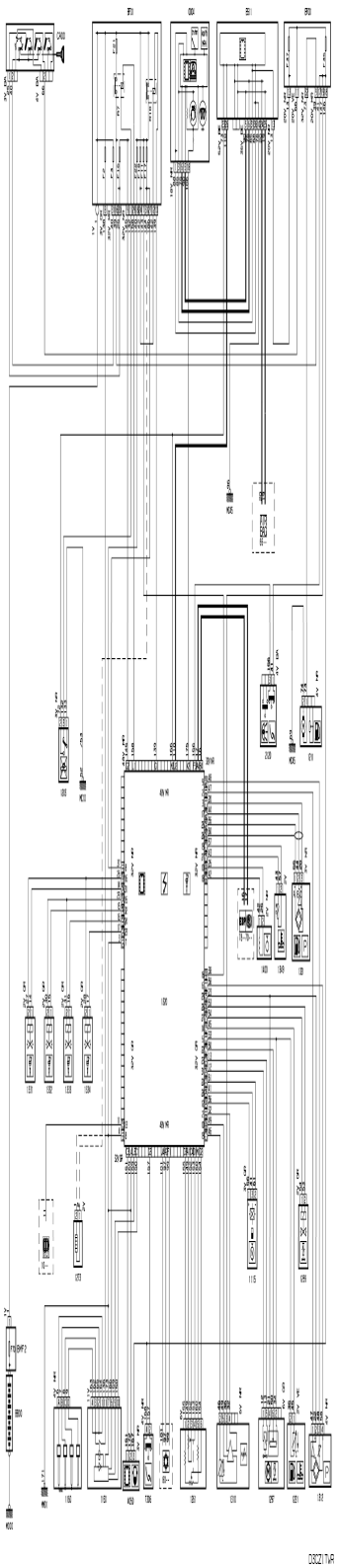

Vehicle

JUMPER

Data

New

Domain

Driver Information

Function

Engine Oil Information

Function Diagram

Principle

Wiring

Installation

9C- 06/10/2013

SVG Viewer

Tools

History

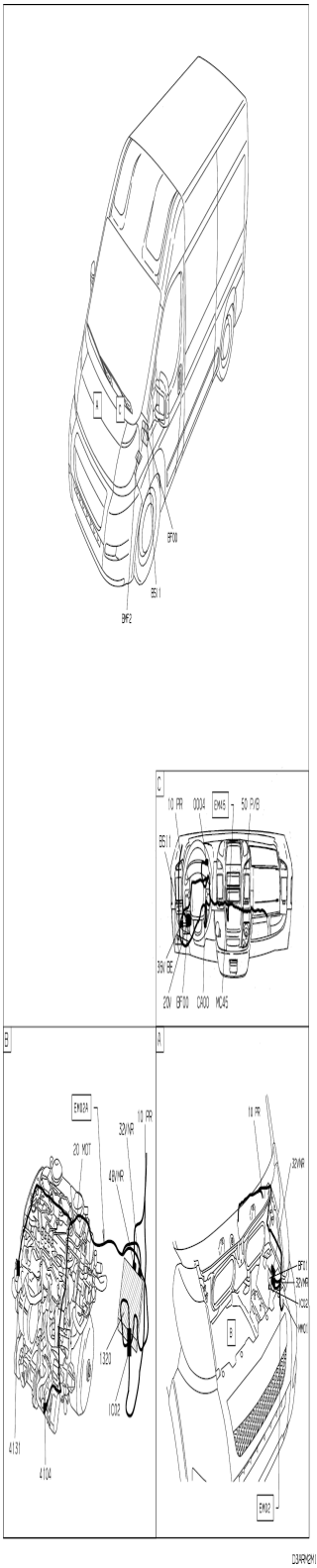
BF00
BS11
BMF2
C
10 PR
0004
EM45
50 PVB
BS11
35N BE
20V
BF00
CA00
MC45
B
EM02A
20 MOT
32VNR
10 PR
48VNR
1320
1002
4131
4104
A
10 PR
32VNR
BF01
32VNR
1002
MM01
B
EM02

D3ARM2M1

Vehicle

JUMPER

Data

New

Domain

Driver Information

Function

Engine Oil Information

Function Diagram

Principle

Wiring

Installation

9C- 06/10/2013

SVG Viewer

Tools

History

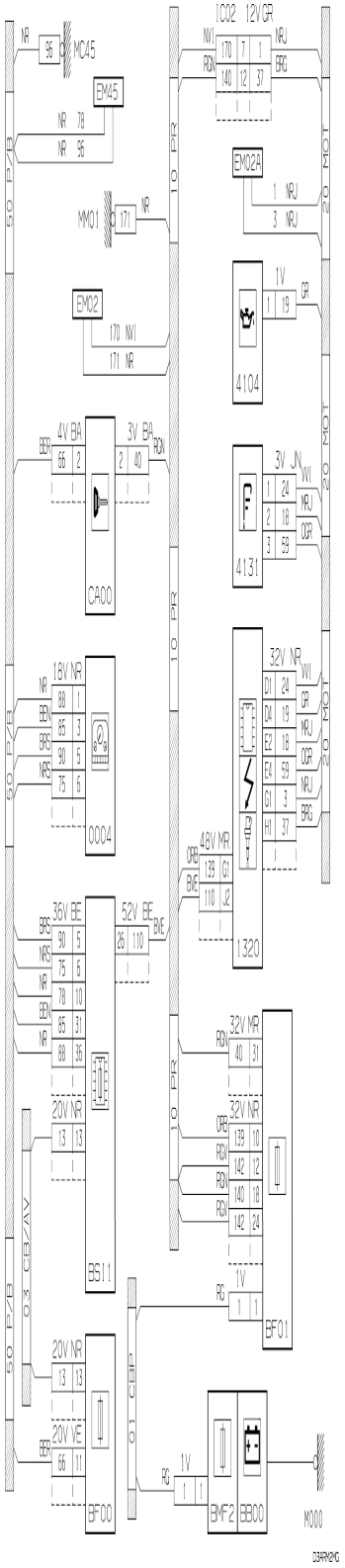
MC45
EM45
MM01
EM02
CA00
0004
BS11
BF00
BF01
BMF2
BB00
M000
4104
4131
1320
EM02A
IC02 12V GR
4V BA
3V BA
18V NR
36V BE
52V BE
20V NR
20V VE
32V NR
48V MR
1V
50 P/B
10 PR
20 MOT
03 CB/AV
01 CBP
D3ARM2MG

Vehicle

JUMPER

Data

New

Domain

Driver Information

Function

Engine Oil Information

Function Diagram

Principle

Wiring

Installation

9C- 06/10/2013

SVG Viewer

Tools

History

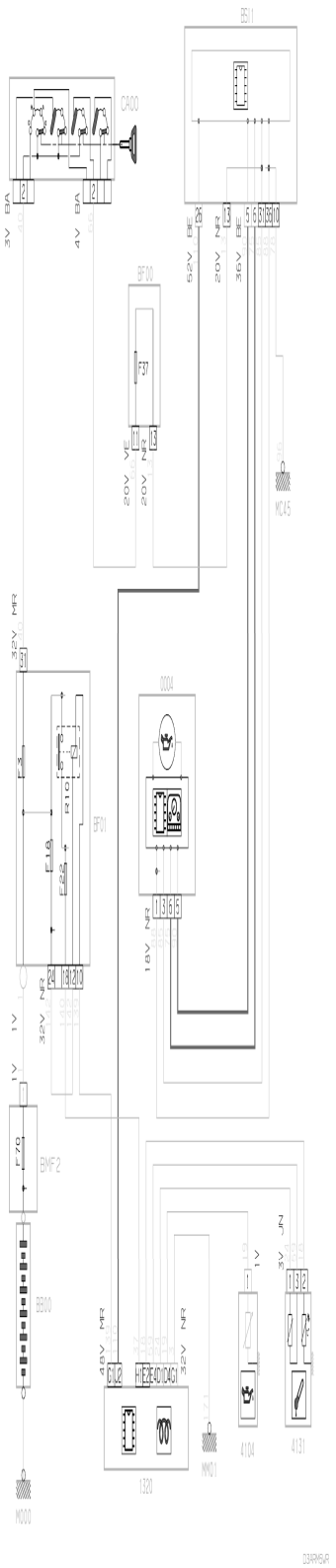

Vehicle

JUMPER

Data

New

Domain

Power Unit

Function

Engine Speed Information

Function Diagram

Principle

Wiring

Installation

9C- 06/10/2013

SVG Viewer

Tools

History

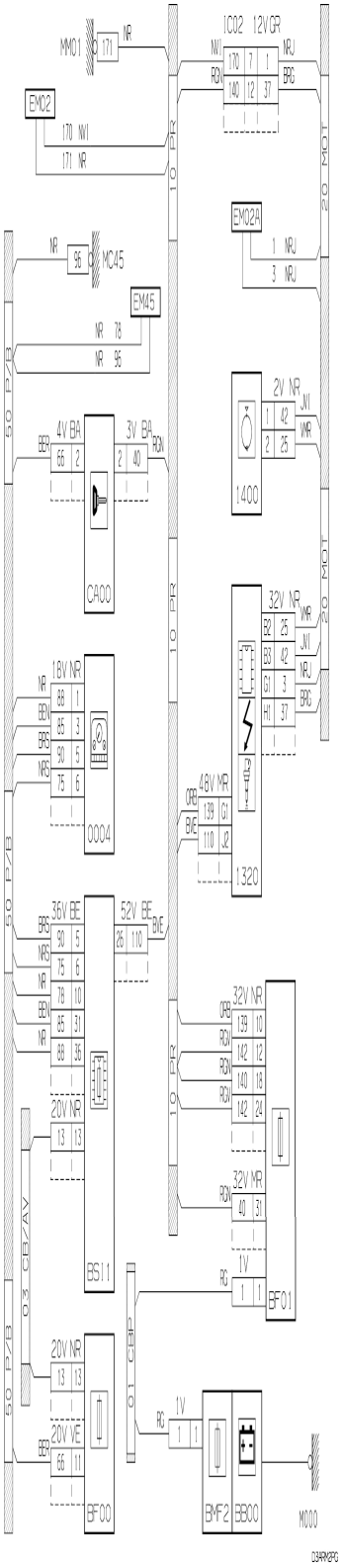
MM01
171
NR
IC02 12V GR
NI
RGN
170 7 1
140 12 37
NRJ
BRG
EM02
170 NI
171 NR
10 PR
20 MOT
EM02A
1 NRJ
3 NRJ
NR
96
MC45
EM45
NR 78
NR 96
50 P/B
2V NR
JVI
WMR
1 42
2 25
1400
4V BA
3V BA
BER
RGN
66 2
2 40
CA00
32V NR
B2 25
B3 42
G1 3
H1 37
18V NR
88 1
85 3
90 5
75 6
0004
48V MR
ORB
BVE
139 G1
110 J2
1320
36V BE
52V BE
BVE
26 110
78 10
85 31
88 36
32V NR
139 10
142 12
140 18
142 24
20V NR
13 13
32V MR
40 31
1V
BF01
03 CB/AV
01 CBP
20V NR
13 13
20V VE
66 11
BF00
BMF2
BB00
M000
D3ARM2PG

Vehicle

JUMPER

Data

New

Domain

Power Unit

Function

Engine Speed Information

Function Diagram

Principle

Wiring

Installation

9C- 06/10/2013

SVG Viewer

Tools

History

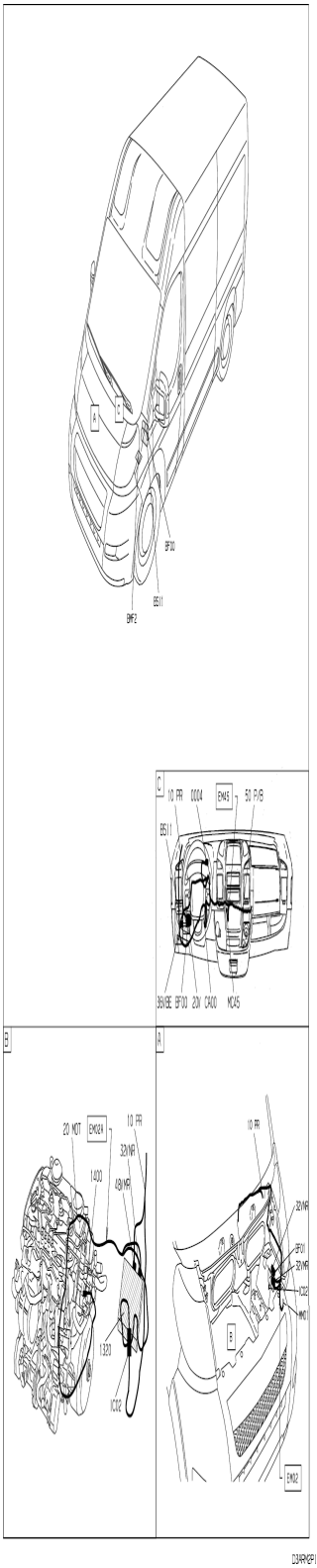
A
C
BF00
BS11
BMF2
C
10 PR
0004
EM45
50 P/B
BS11
BS1BE
BF00
20V
CA00
MCA5
B
20 MOT
EM02A
10 PR
32VNR
1400
48VNR
1320
1C02
A
10 PR
32VNR
BF01
32VNR
1C02
MM01
B
EM02

D3ARM2P1

Vehicle

JUMPER

Data

New

Domain

Power Unit

Function

Engine Starting

Function Diagram

Principle

Wiring

Installation

9C- 06/10/2013

SVG Viewer

Tools

History

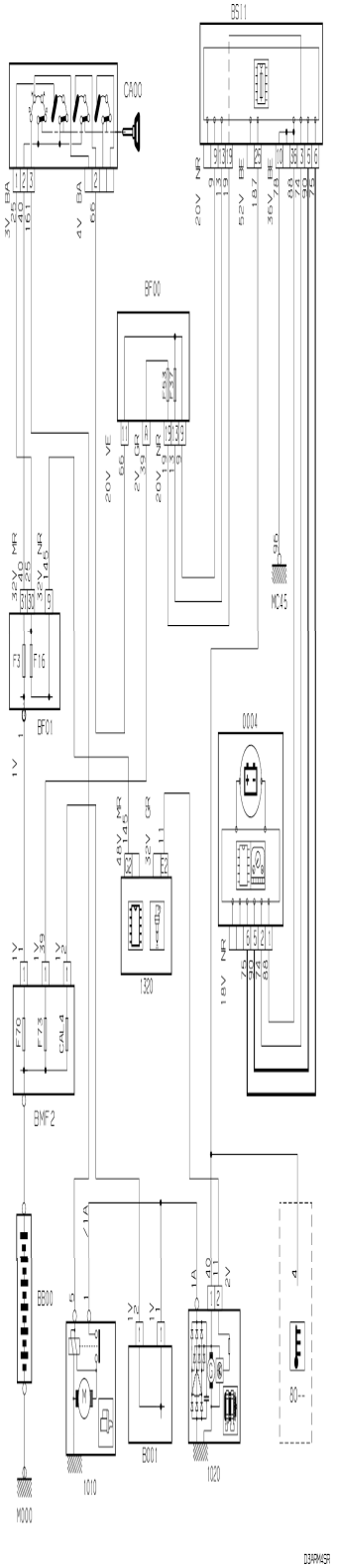
BS11
CH00
BF00
MC45
BF01
0004
1320
BMF2
BB00
B001
1010
1020
M000

Vehicle

JUMPER

Data

New

Domain

Driver Information

Function

Exterior Temperature Information

Function Diagram

Principle

Principle

Wiring

9C- 06/10/2013

SVG Viewer

Tools

History

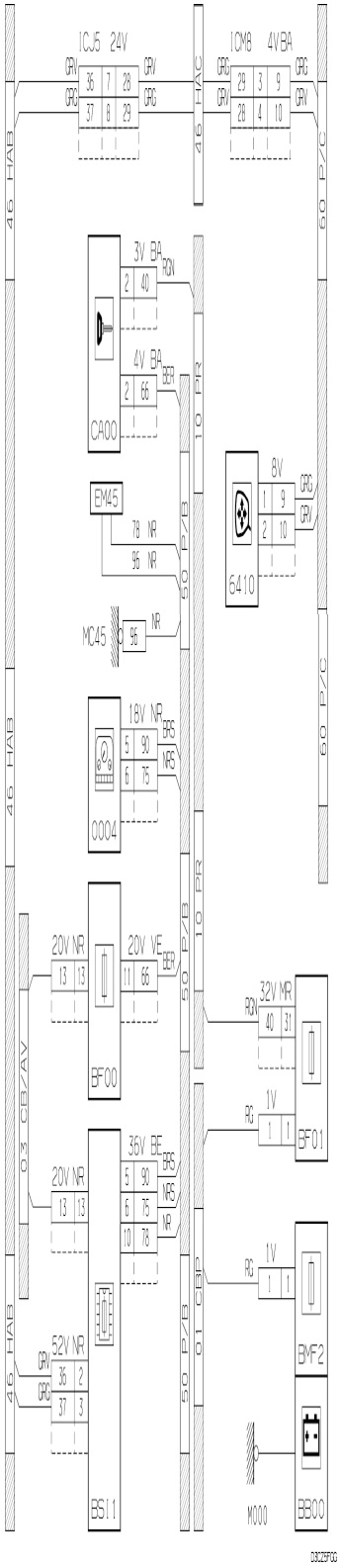
ICJ5 24V
ICM8 4VBA
46 HAB
46 HAC
60 P/C
3V BA
4V BA
CA00
EM45
MC45
18V NR
0004
20V NR
20V VE
BF00
36V BE
52V NR
BS11
8V
6410
32V MR
1V
BF01
BMF2
M000
BB00
50 P/B
10 PR
01 CBP
03 CB/AV
DBCBPG0

vehicle : RELAY III		OPR : 12937717	
domain	driver information	function	exterior temperature information
component			

principle

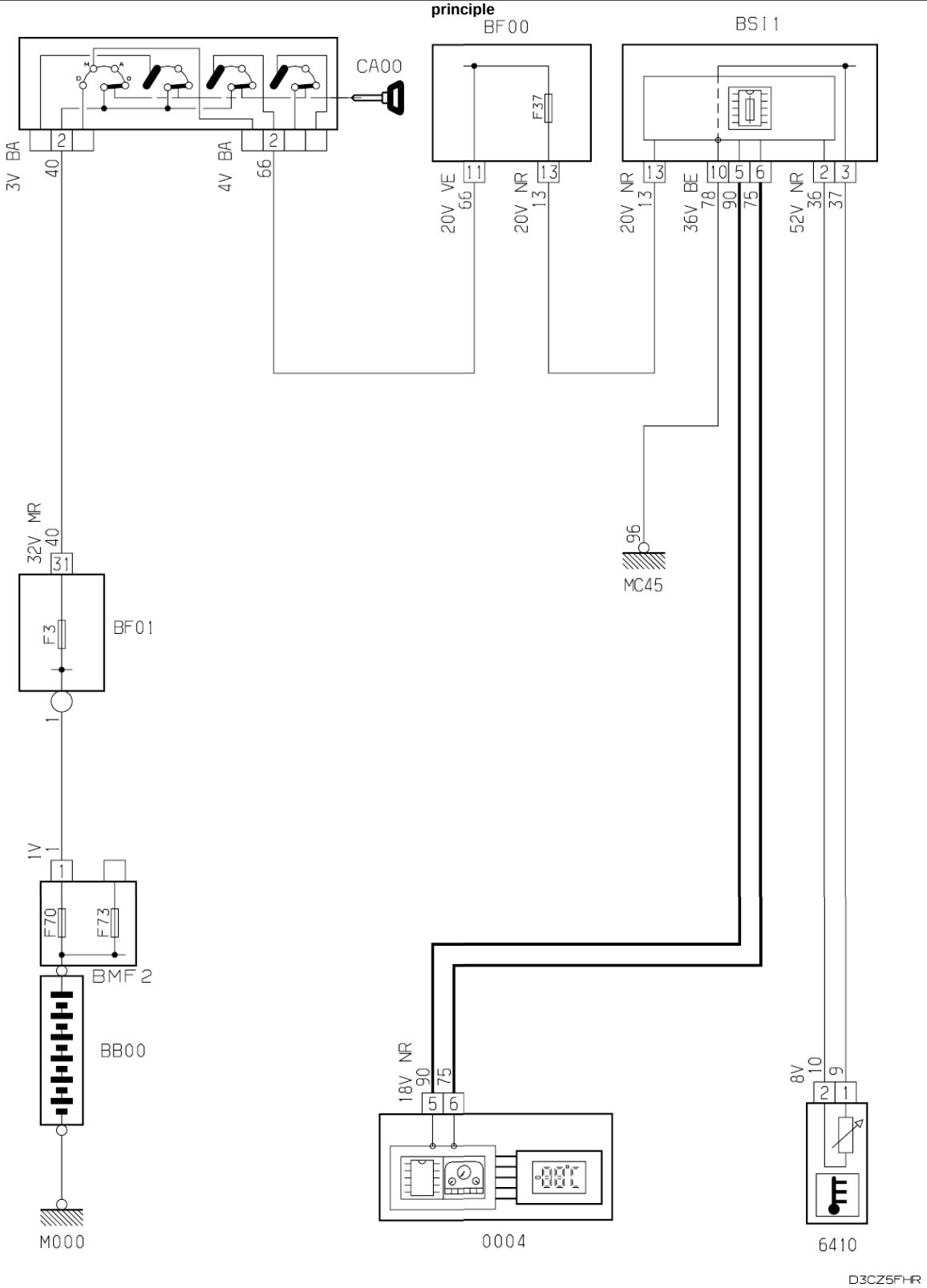

property of PSA Peugeot Citroën

23/12/2015

Vehicle

JUMPER

Data

New

Domain

Driver Information

Function

Exterior Temperature Information

Function Diagram

Principle

Principle

Wiring

9C- 06/10/2013

SVG Viewer

Tools

History

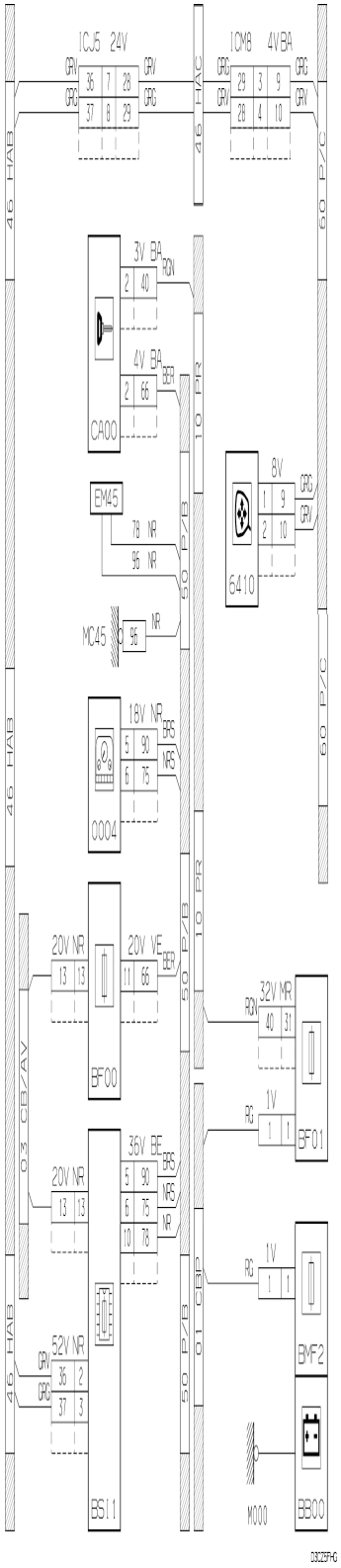
1CJ5 24V
1CM8 4VBA
46 HAB
46 HVC
60 P/C
3V BA
4V BA
CA00
EM45
78 NR
96 NR
MC45
8V
6410
18V NR
0004
20V NR
20V VE
BF00
32V NR
1V
BF01
35V BE
52V NR
BS11
BMF2
M000
BB00
03 CB/AV
60 P/B
10 FR
01 CBP

Vehicle

JUMPER

Data

New

Domain

Lighting - Signalling

Function

Fog Lamps

Function Diagram

Principle

Wiring

Installation

9C- 06/10/2013

SVG Viewer

Tools

History

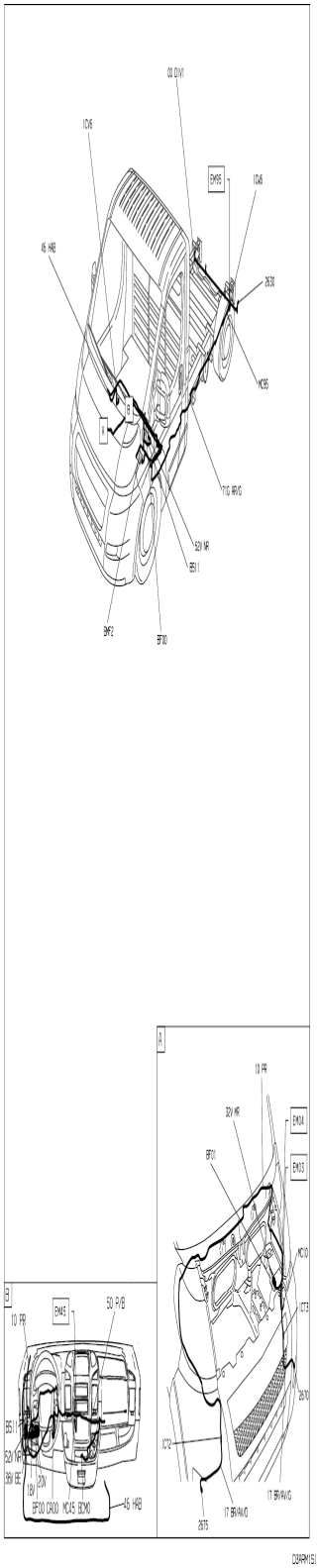
00 DIV1
1C16
EM95
1C16
45 HAB
26S0
MC95
71G AVIG
52V MR
BS11
BMP2
BF00
A
10 PR
32V MR
EM04
EM03
BF01
MC10
1C16
26S0
1C12
26S5
17 BRAVIG
71G AVIG
B
10 PR
EM45
50 PVB
BS11
52V MR
36V BE
28V
MC21
10
BF00 C5A00 MC45 BCM0
45 HAB

DIAPARIS1

Vehicle

JUMPER

Data

New

Domain

Lighting - Signalling

Function

Fog Lamps

Function Diagram

Principle

Wiring

Installation

9C- 06/10/2013

SVG Viewer

Tools

History

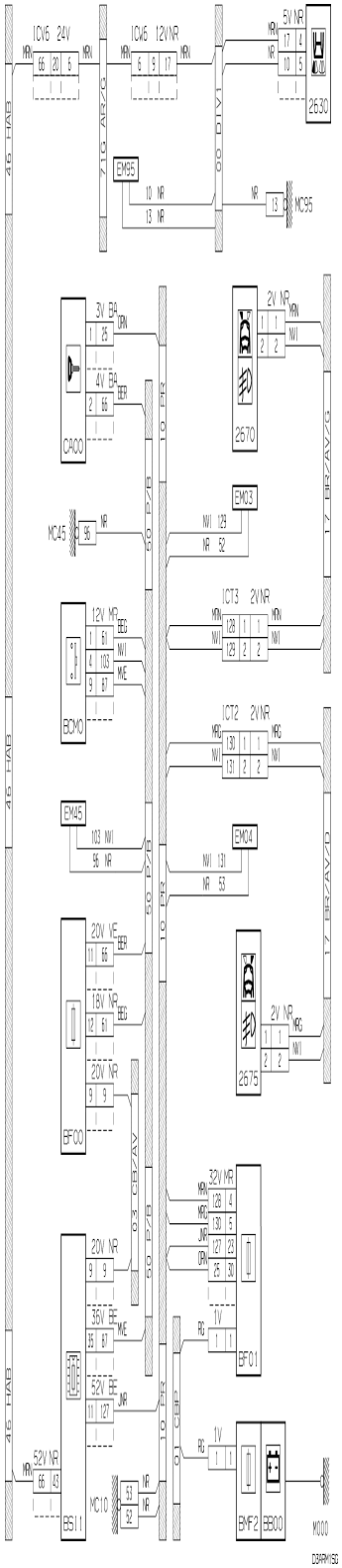
ICW6 24V
ICW6 12VNR
5V NR
2630
EM95
MC95
3V BA
4V BA
CA00
2V NR
2670
EM03
MC45
ICT3 2VNR
12V NR
BCM0
ICT2 2VNR
EM45
EM04
20V VE
18V NR
20V NR
BF00
2V NR
2675
32V NR
20V NR
36V BE
52V BE
BF01
52V NR
BSI1
MC10
BMF2
BB00
M000
D3ARM1SG

Vehicle

JUMPER

Data

New

Domain

Lighting - Signalling

Function

Fog Lamps

Function Diagram

Principle

Wiring

Installation

9C- 06/10/2013

SVG Viewer

Tools

History

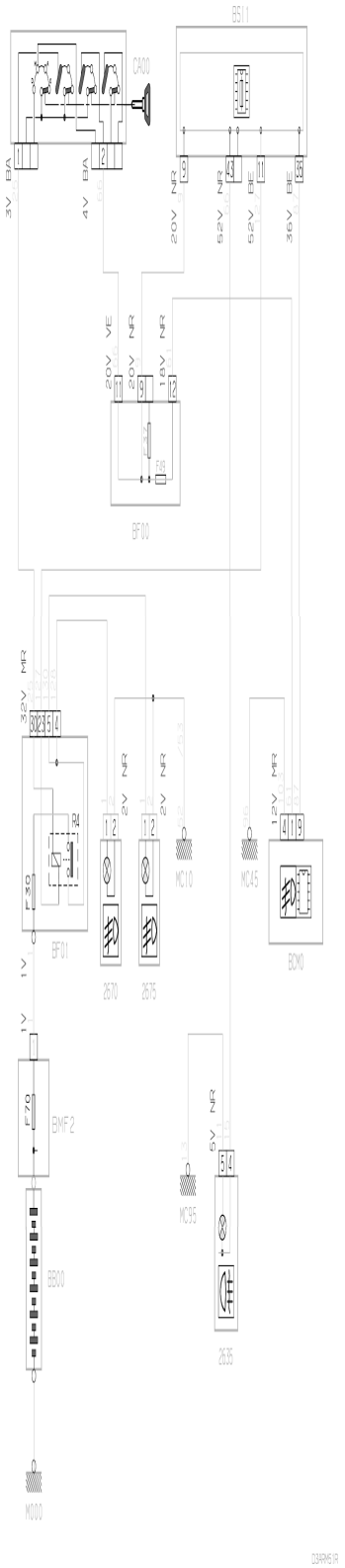
BS11
CA00
3V BA
4V BA
20V NR
52V NR
52V BE
36V BE
20V VE
20V NR
18V NR
F49
BF00
32V MR
F30
R4
BF01
2V NR
2V NR
MC10
2670
2675
12V MR
MC45
BCM0
1V
1V
F70
BMF2
BB00
5V NR
MC95
2635
M000
D3ARM51R

Vehicle

JUMPER

Data

New

Domain

Driver Information

Function

Fuel Level Information

Function Diagram

Principle

Wiring

Installation

9C- 06/10/2013

SVG Viewer

Tools

History

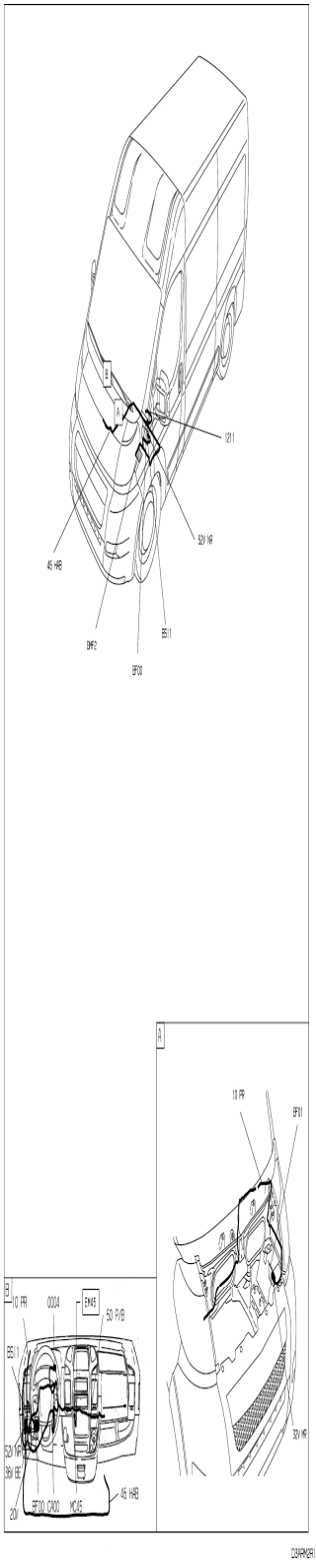
B
A
121.1
52V WR
45 HAB
BMF2
BS11
BF00
10 PR
BF01
36V WR
B
10 PR
0004
EM45
50 PVB
BS11
52V WR
36V BE
20V
BF00
CA00
MC45
45 HAB

D3ARM2R1

Vehicle

JUMPER

Data

New

Domain

Driver Information

Function

Fuel Level Information

Function Diagram

Principle

Wiring

Installation

9C- 06/10/2013

SVG Viewer

Tools

History

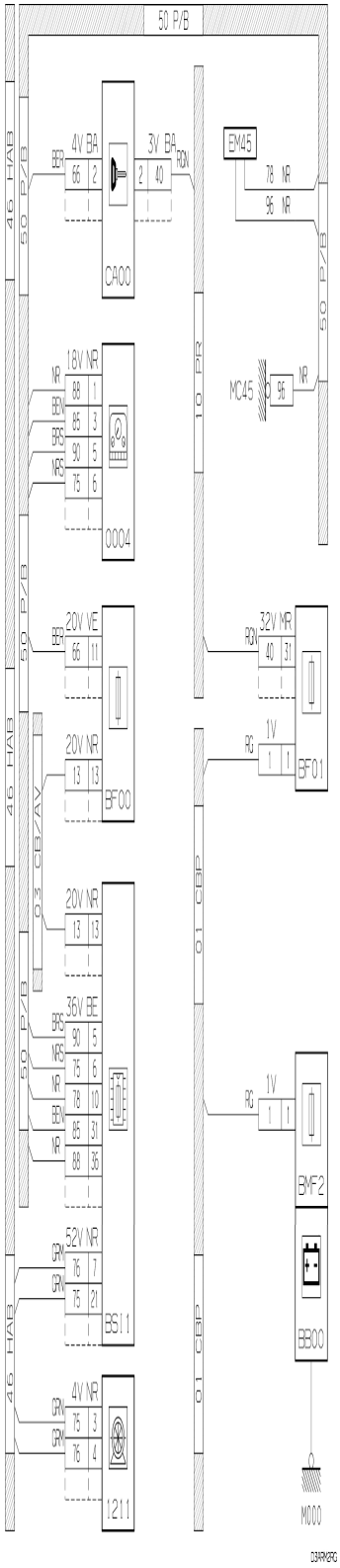
50 P/B
46 HAB
50 P/B
4V BA
BER
66 2
3V BA
2 40
RGN
CA00
EM45
78 NR
96 NR
50 P/B
18V NR
NR
BEN
BRS
NRS
88 1
85 3
90 5
75 6
0004
10 PR
MC45
96
NR
50 P/B
20V VE
BER
66 11
32V MR
RGN
40 31
1V
RG
BF01
46 HAB
20V NR
13 13
BF00
03 CB/AV
20V NR
13 13
01 CBP
36V BE
BRS
NRS
NR
BEN
NR
90 5
75 6
78 10
85 31
88 36
1V
RG
BMF2
52V NR
GRN
GRN
76 7
75 21
BS11
BB00
46 HAB
4V NR
GRN
GRN
75 3
76 4
1211
01 CBP
M000
D3ARMGRG

Vehicle

JUMPER

Data

New

Domain

Driver Information

Function

Fuel Level Information

Function Diagram

Principle

Wiring

Installation

9C- 06/10/2013

SVG Viewer

Tools

History

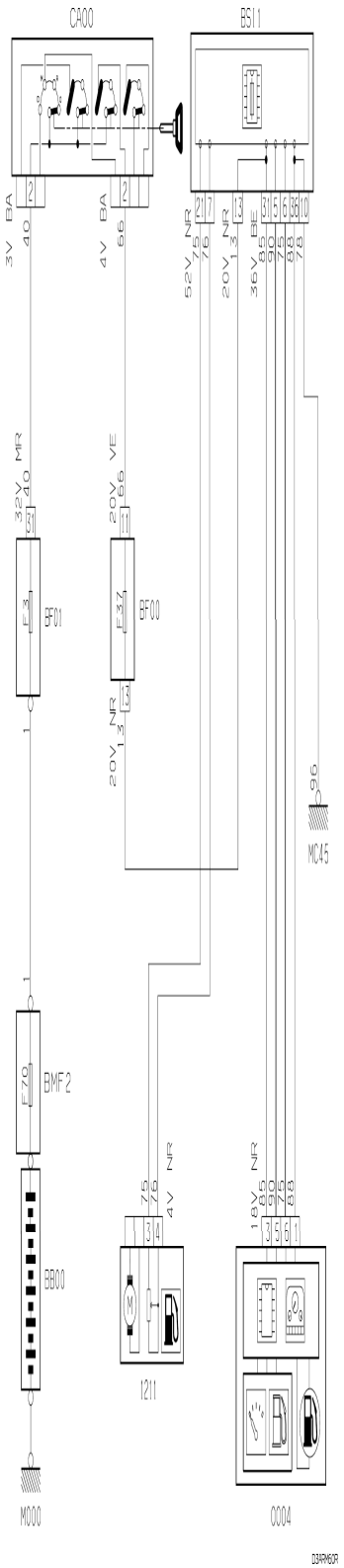
CA00
BS11
3V BA
40
4V BA
66
52V NR
75
76
20V NR
13
36V BE
85
90
75
88
78
32V MR
40
20V VE
66
BF01
BF00
20V NR
13
MC45
BMF2
BB00
4V NR
75
76
18V NR
85
90
75
88
1211
M000
C004
D3ARM60R

Vehicle

JUMPER
Data
New

Domain

General Points

Function

General Layout Of ECUs

Function Diagram

General

9C- 06/10/2013

SVG Viewer
Tools
History

D3B0M3P0	GENERAL LAYOUT OF ECUS

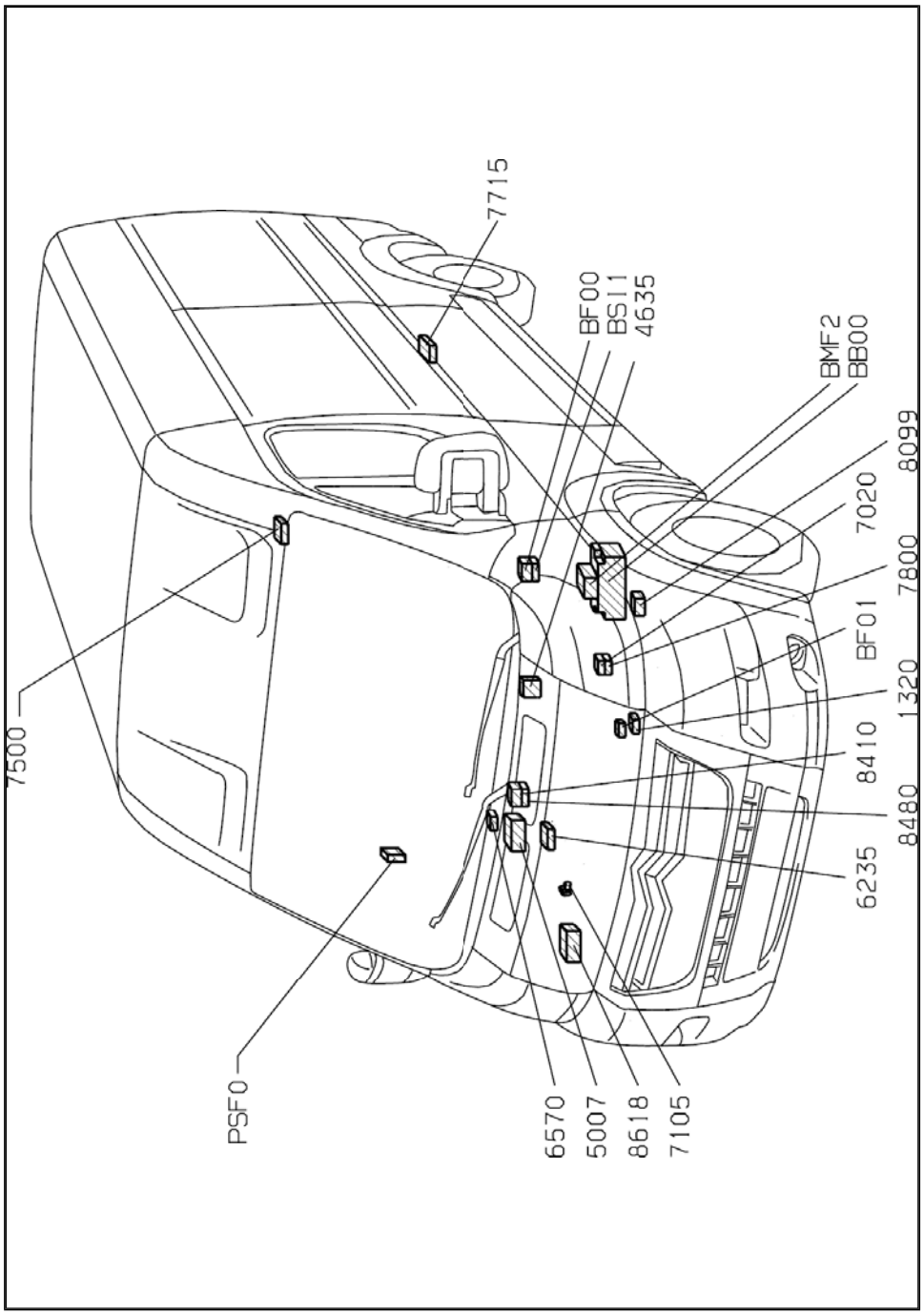

fig. d3ap27yp

Vehicle

JUMPER
Data
New

Domain

General Points

Function

General Location Of Interconnections

Function Diagram

General

9C- 06/10/2013

SVG Viewer
Tools
History

D3B0M0P0	GENERAL LOCATION OF INTERCONNECTIONS (CAB)

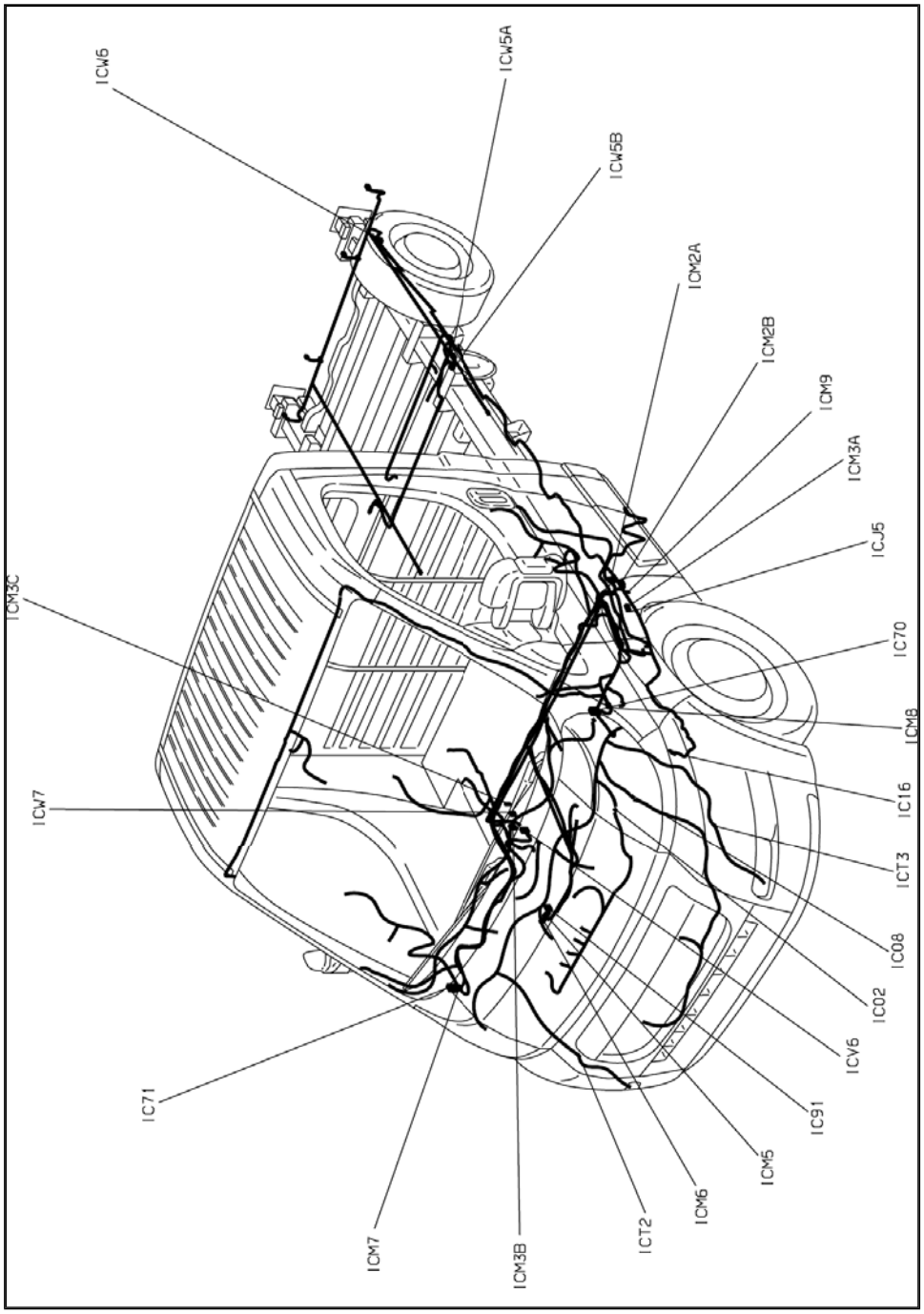

fig. d3ap27xp

Vehicle

JUMPER
Data
New

Domain

General Points

Function

General Location Of Harness Labels

Function Diagram

General

9C- 06/10/2013

SVG Viewer
Tools
History

D3B0LWP0	HARNESS INSTALLATION DIAGRAMS (CAB)

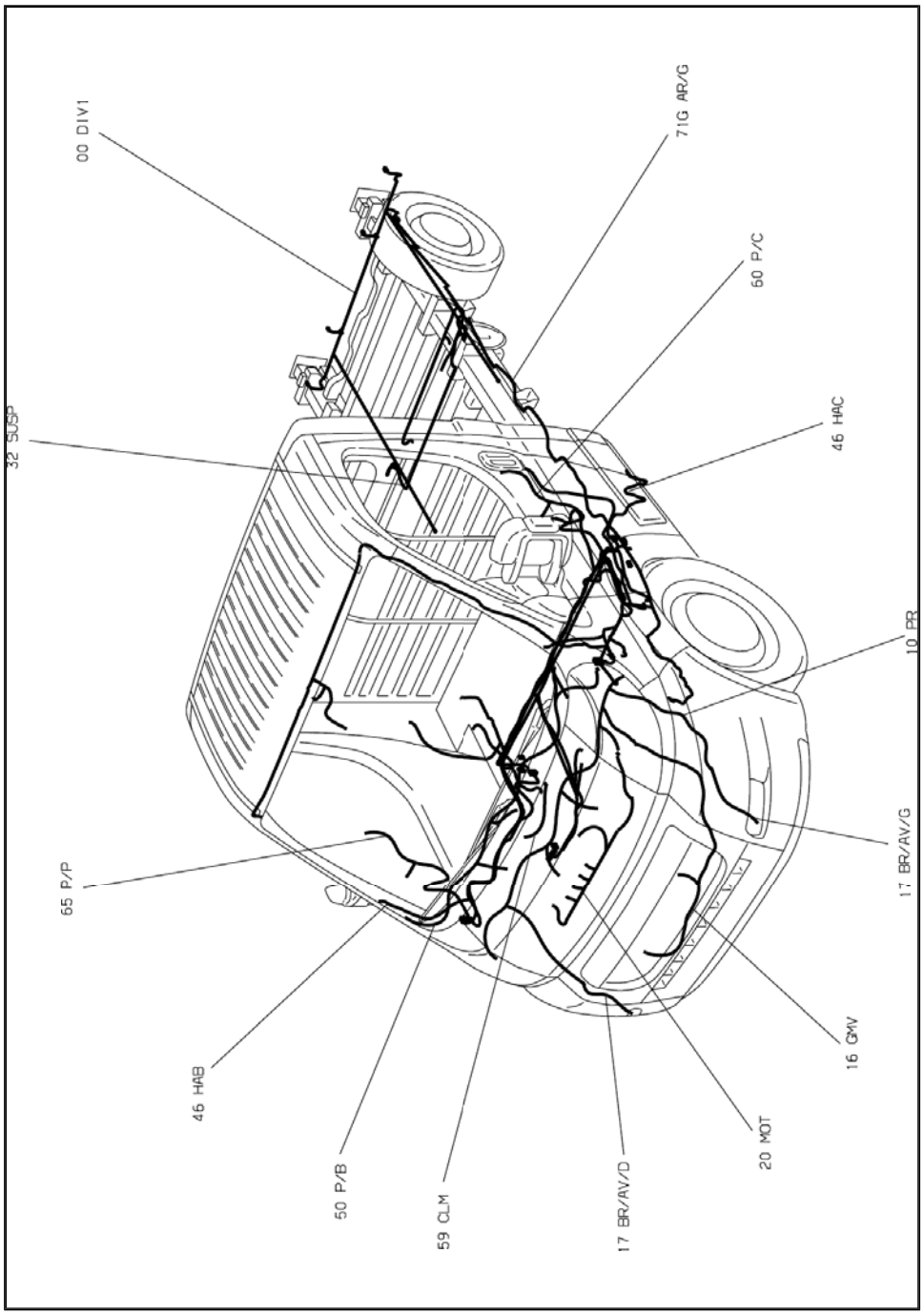

fig. d3ap280p

Vehicle

JUMPER

Data

New

Domain

Washing And Wiping

Function

Headlamp Wash

Function Diagram

Principle

Wiring

Installation

9C- 06/10/2013

SVG Viewer

Tools

History

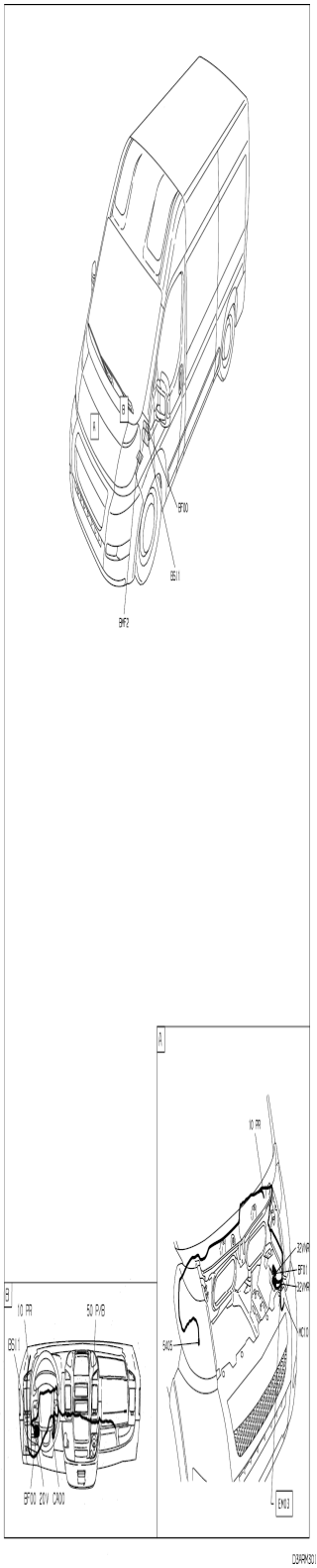
BF00
BS11
BF12
10 PR
32VWR
BF01
32VWR
MC10
5405
EM03
10 PR
50 PVB
BS11
BF00 20V CA00

DRAWS01

Vehicle

JUMPER

Data

New

Domain

Washing And Wiping

Function

Headlamp Wash

Function Diagram

Principle

Wiring

Installation

9C- 06/10/2013

SVG Viewer

Tools

History

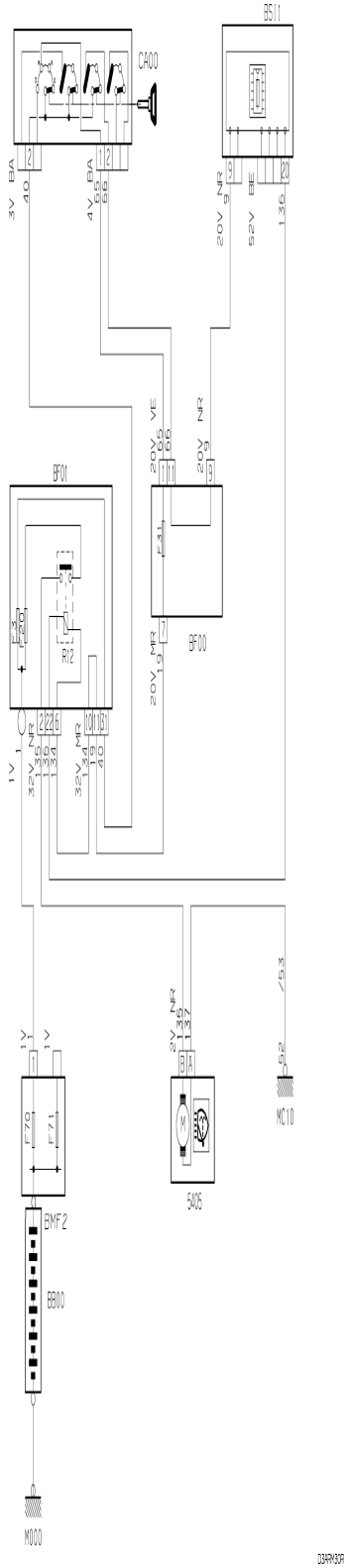
B511
C400
BF01
BF00
R12
F31
F70
F71
BMF2
BB00
M000
5405
MC10

Vehicle

JUMPER

Data

New

Domain

Washing And Wiping

Function

Headlamp Wash

Function Diagram

Principle

Wiring

Installation

9C- 06/10/2013

SVG Viewer

Tools

History

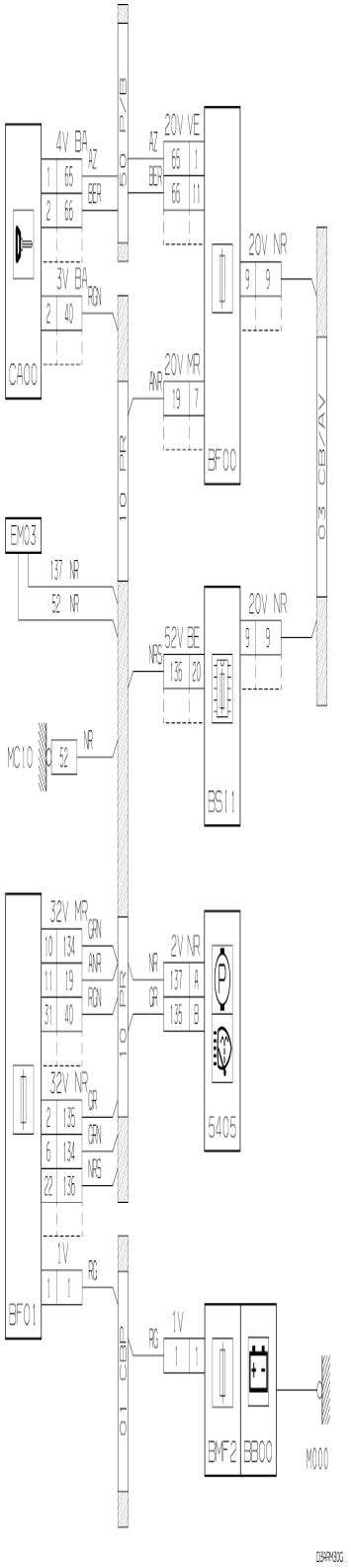
CA00
4V BA
3V BA
AZ
BER
RGN
50 P/B
20V VE
20V NR
20V MR
BF00
10 PR
03 CB/AV
EM03
137 NR
52 NR
52V BE
NRS
BS11
MC10
NR
32V MR
32V NR
GRN
ANR
2V NR
GR
5405
BF01
1V
RG
01 CBP
BMF2
BB00
M000
D3RM30G

vehicle : RELAY III		OPR : 12937717	
domain	washing and wiping	function	headlamp wash
component			

principle

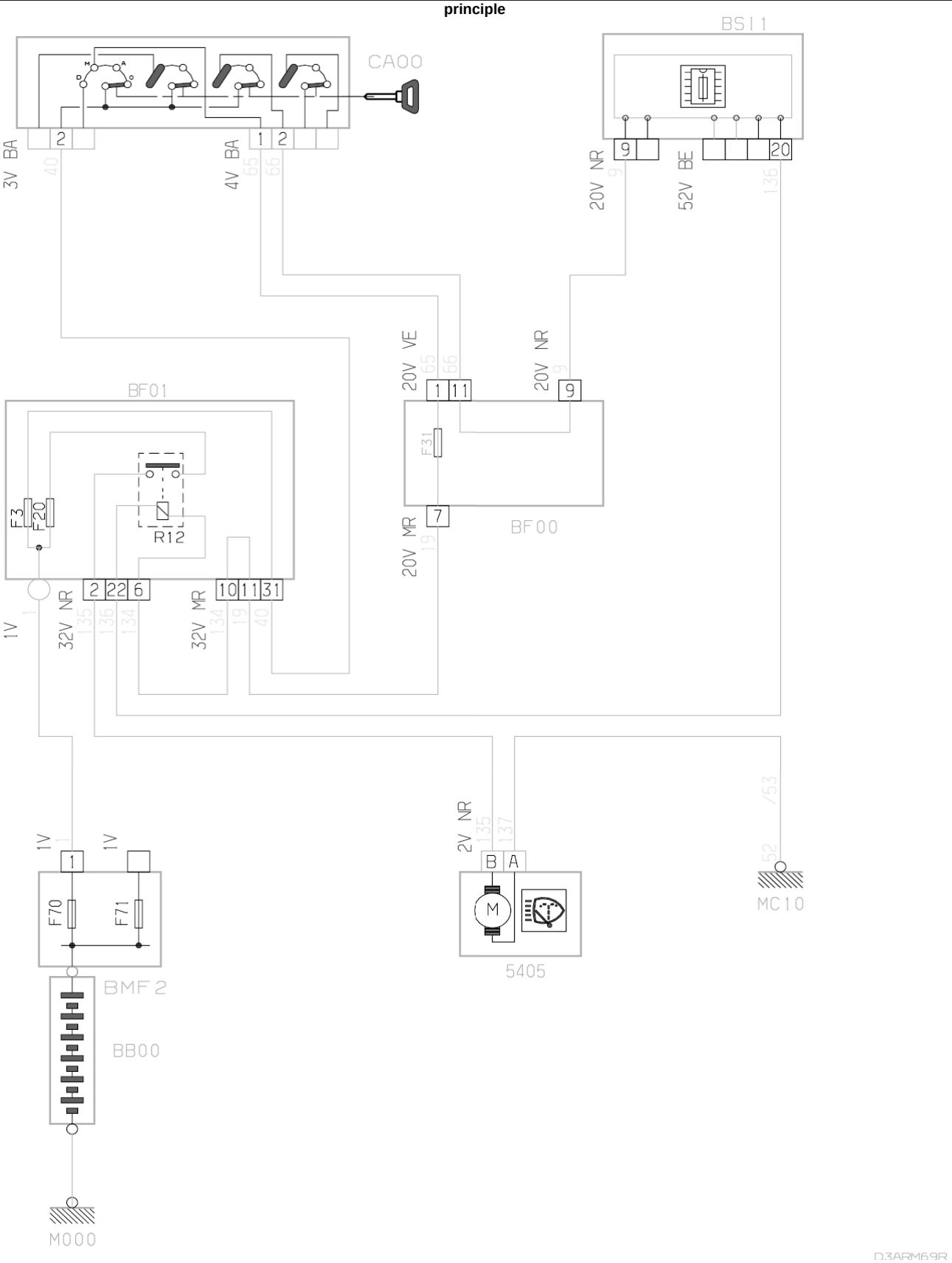

wiring

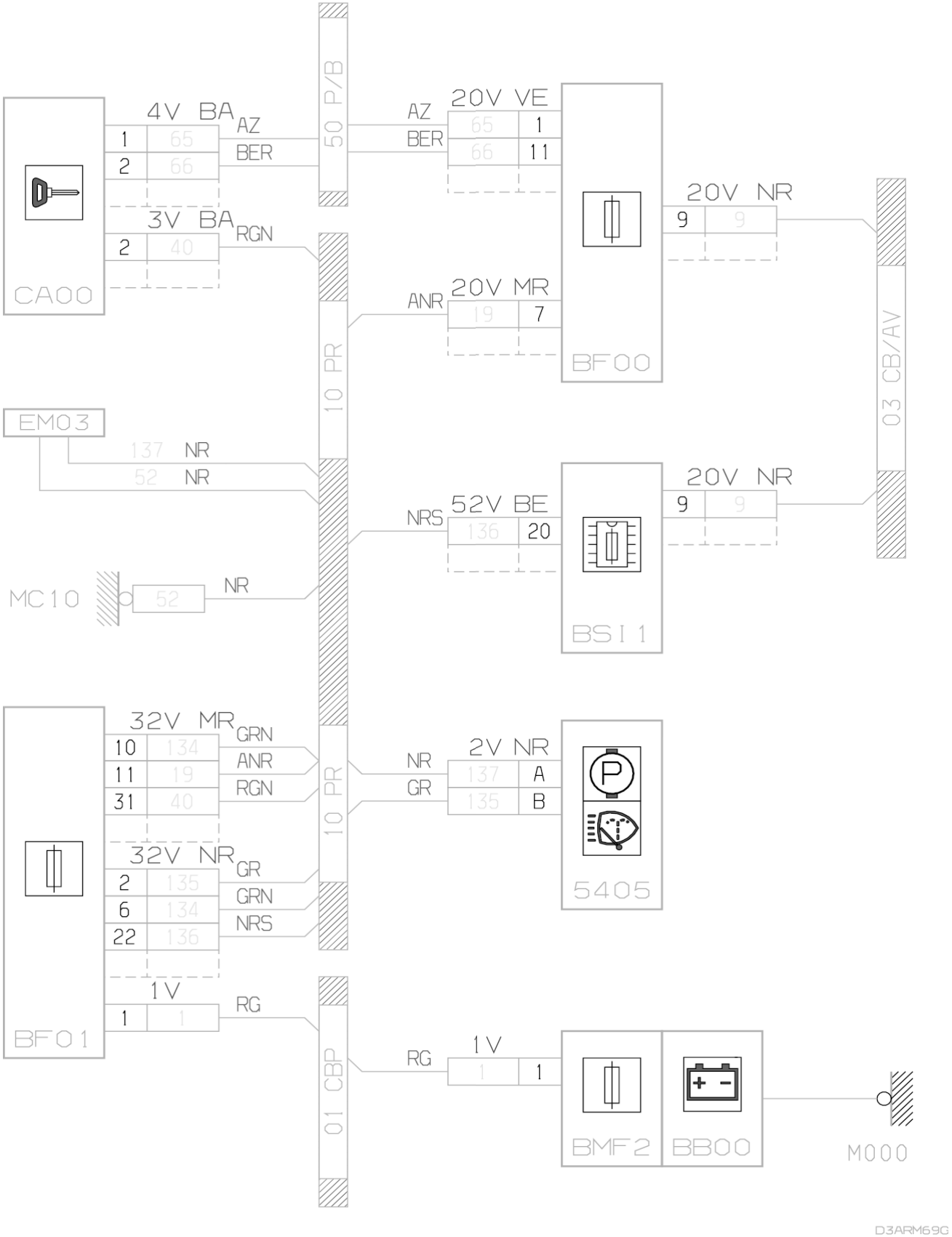
CA00
4V BA
1 65
2 66
AZ
BER
3V BA
2 40
RGN
50 P/B
AZ
BER
20V VE
65 1
66 11
BF00
20V NR
9 9
03 CB/AV
ANR
20V MR
19 7
10 PR
EM03
137 NR
52 NR
MC10
52
NR
NRS
52V BE
136 20
BSI1
20V NR
9 9
BF01
32V MR
10 134
11 19
31 40
GRN
ANR
RGN
32V NR
2 135
6 134
22 136
GR
GRN
NRS
NR
GR
2V NR
137 A
135 B
5405
1V
1 1
RG
01 CBP
RG
1V
1 1
BMF2
BB00
M000
D3ARM69G

null

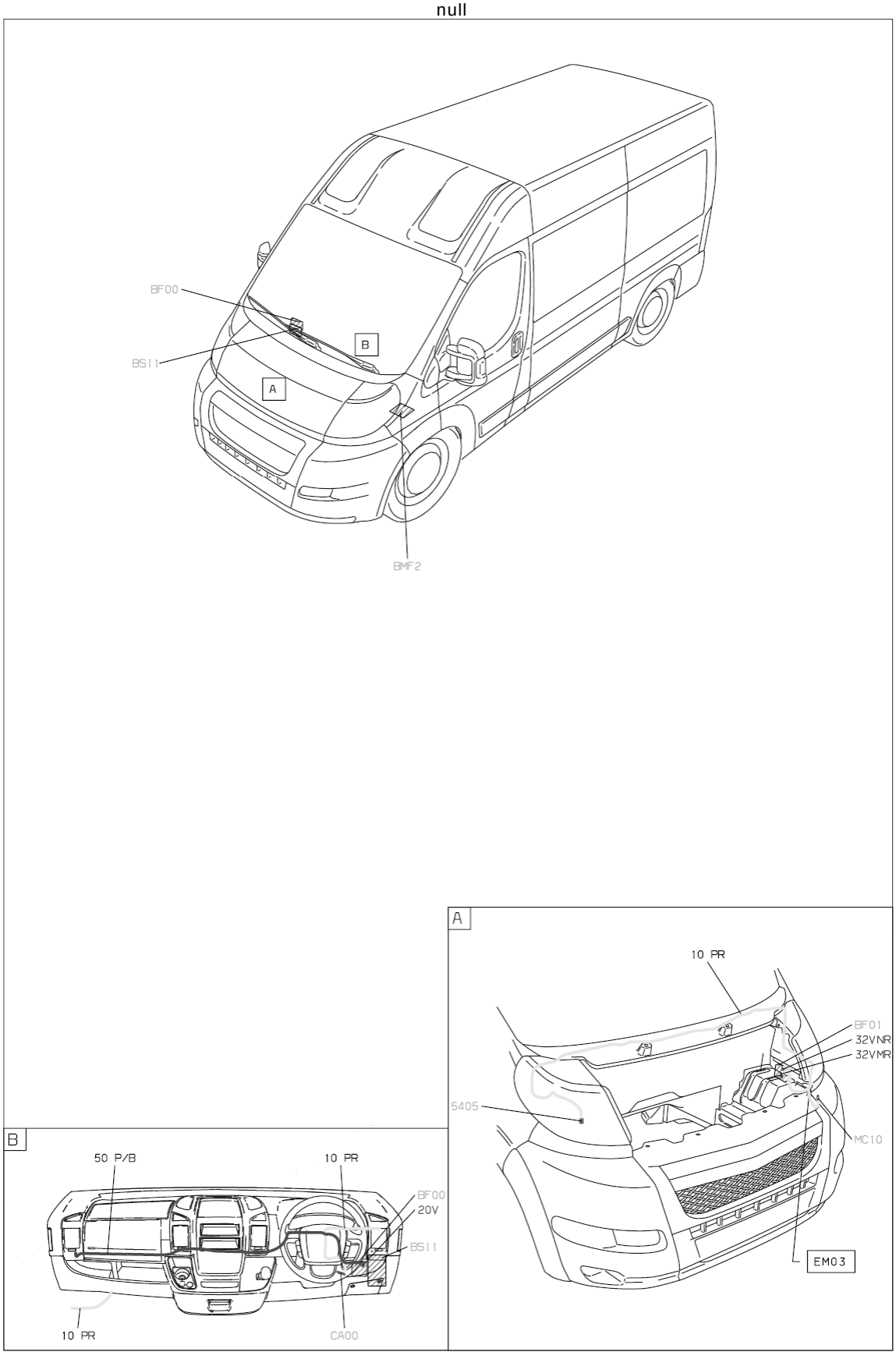

D3ARM691

property of PSA Peugeot Citroën

23/12/2015

Vehicle

JUMPER

Data

New

Domain

Comfort And Convenience

Function

Heated Mirrors

Function Diagram

Principle

Wiring

Installation

9C- 06/10/2013

SVG Viewer

Tools

History

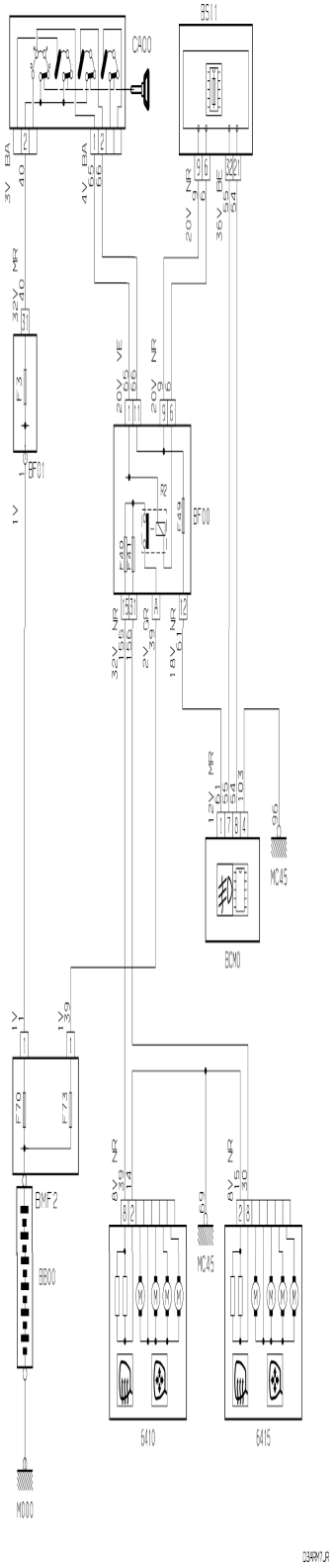
BS11
C400
BF01
BF00
BCM0
MC45
BMF2
BB00
M000
6410
6415

Vehicle

JUMPER

Data

New

Domain

Comfort And Convenience

Function

Audio System

Function Diagram

Principle

Synopsis

Wiring

Installation

9C- 06/10/2013

SVG Viewer

Tools

History

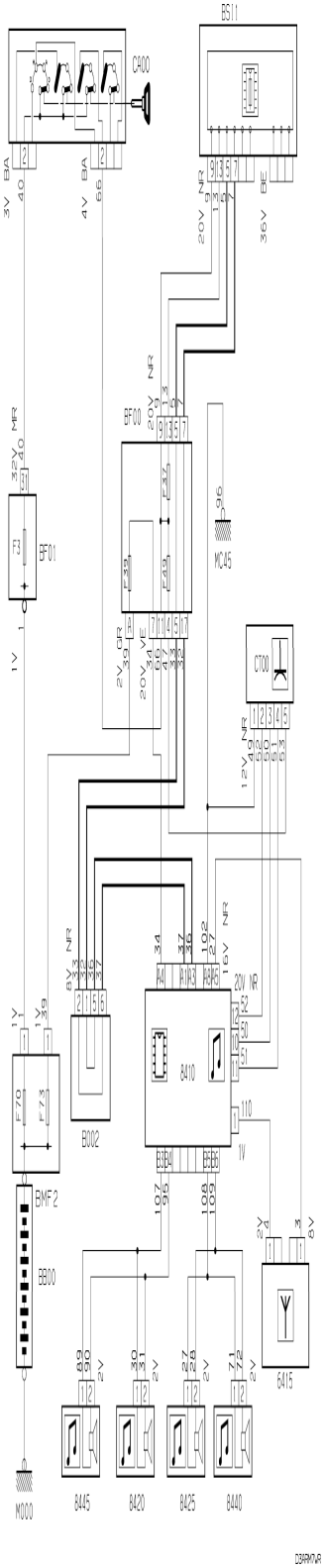
BS11
C900
BF00
BF01
MC45
CT00
B002
8410
BMF2
BB00
6415
M000
8445
8420
8425
8440

Vehicle

JUMPER

Data

New

Domain

Comfort And Convenience

Function

Heated Seats

Function Diagram

Principle

Wiring

Installation

9C- 06/10/2013

SVG Viewer

Tools

History

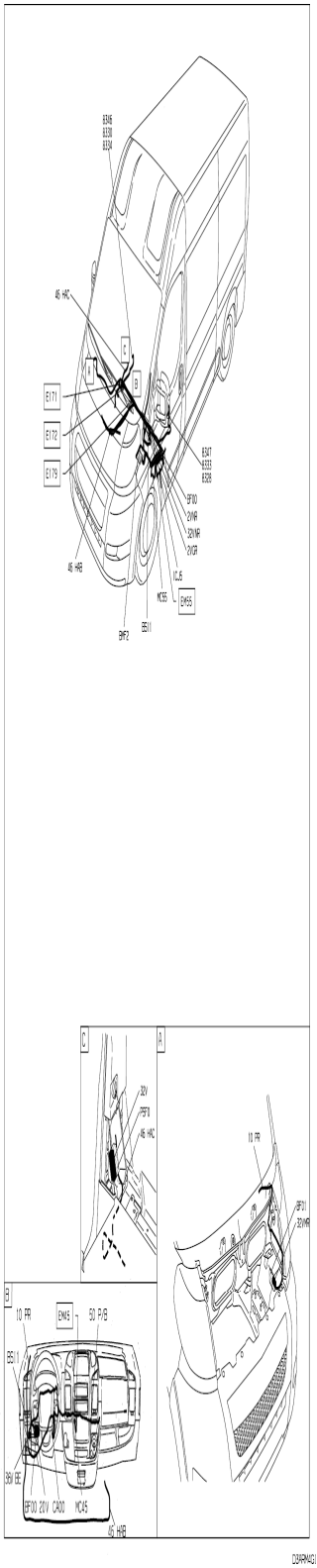
C
A
B
10 PR
50 P/B
EM45
BSI1
BSI2
BF00
20VP
MC45
45 HRB
45 HRC
E171
E172
E176
E177
E178
E179
E180
E181
E182
E183
E184
E185
E186
E187
E188
E189
E190
E191
E192
E193
E194
E195
E196
E197
E198
E199
E200
E201
E202
E203
E204
E205
E206
E207
E208
E209
E210
E211
E212
E213
E214
E215
E216
E217
E218
E219
E220
E221
E222
E223
E224
E225
E226
E227
E228
E229
E230
E231
E232
E233
E234
E235
E236
E237
E238
E239
E240
E241
E242
E243
E244
E245
E246
E247
E248
E249
E250
E251
E252
E253
E254
E255
E256
E257
E258
E259
E260
E261
E262
E263
E264
E265
E266
E267
E268
E269
E270
E271
E272
E273
E274
E275
E276
E277
E278
E279
E280
E281
E282
E283
E284
E285
E286
E287
E288
E289
E290
E291
E292
E293
E294
E295
E296
E297
E298
E299
E300
E301
E302
E303
E304
E305
E306
E307
E308
E309
E310
E311
E312
E313
E314
E315
E316
E317
E318
E319
E320
E321
E322
E323
E324
E325
E326
E327
E328
E329
E330
E331
E332
E333
E334
E335
E336
E337
E338
E339
E340
E341
E342
E343
E344
E345
E346
E347
E348
E349
E350
E351
E352
E353
E354
E355
E356
E357
E358
E359
E360
E361
E362
E363
E364
E365
E366
E367
E368
E369
E370
E371
E372
E373
E374
E375
E376
E377
E378
E379
E380
E381
E382
E383
E384
E385
E386
E387
E388
E389
E390
E391
E392
E393
E394
E395
E396
E397
E398
E399
E400
E401
E402
E403
E404
E405
E406
E407
E408
E409
E410
E411
E412
E413
E414
E415
E416
E417
E418
E419
E420
E421
E422
E423
E424
E425
E426
E427
E428
E429
E430
E431
E432
E433
E434
E435
E436
E437
E438
E439
E440
E441
E442
E443
E444
E445
E446
E447
E448
E449
E450
E451
E452
E453
E454
E455
E456
E457
E458
E459
E460
E461
E462
E463
E464
E465
E466
E467
E468
E469
E470
E471
E472
E473
E474
E475
E476
E477
E478
E479
E480
E481
E482
E483
E484
E485
E486
E487
E488
E489
E490
E491
E492
E493
E494
E495
E496
E497
E498
E499
E500
E501
E502
E503
E504
E505
E506
E507
E508
E509
E510
E511
E512
E513
E514
E515
E516
E517
E518
E519
E520
E521
E522
E523
E524
E525
E526
E527
E528
E529
E530
E531
E532
E533
E534
E535
E536
E537
E538
E539
E540
E541
E542
E543
E544
E545
E546
E547
E548
E549
E550
E551
E552
E553
E554
E555
E556
E557
E558
E559
E560
E561
E562
E563
E564
E565
E566
E567
E568
E569
E570
E571
E572
E573
E574
E575
E576
E577
E578
E579
E580
E581
E582
E583
E584
E585
E586
E587
E588
E589
E590
E591
E592
E593
E594
E595
E596
E597
E598
E599
E600
E601
E602
E603
E604
E605
E606
E607
E608
E609
E610
E611
E612
E613
E614
E615
E616
E617
E618
E619
E620
E621
E622
E623
E624
E625
E626
E627
E628
E629
E630
E631
E632
E633
E634
E635
E636
E637
E638
E639
E640
E641
E642
E643
E644
E645
E646
E647
E648
E649
E650
E651
E652
E653
E654
E655
E656
E657
E658
E659
E660
E661
E662
E663
E664
E665
E666
E667
E668
E669
E670
E671
E672
E673
E674
E675
E676
E677
E678
E679
E680
E681
E682
E683
E684
E685
E686
E687
E688
E689
E690
E691
E692
E693
E694
E695
E696
E697
E698
E699
E700
E701
E702
E703
E704
E705
E706
E707
E708
E709
E710
E711
E712
E713
E714
E715
E716
E717
E718
E719
E720
E721
E722
E723
E724
E725
E726
E727
E728
E729
E730
E731
E732
E733
E734
E735
E736
E737
E738
E739
E740
E741
E742
E743
E744
E745
E746
E747
E748
E749
E750
E751
E752
E753
E754
E755
E756
E757
E758
E759
E760
E761
E762
E763
E764
E765
E766
E767
E768
E769
E770
E771
E772
E773
E774
E775
E776
E777
E778
E779
E780
E781
E782
E783
E784
E785
E786
E787
E788
E789
E790
E791
E792
E793
E794
E795
E796
E797
E798
E799
E800
E801
E802
E803
E804
E805
E806
E807
E808
E809
E810
E811
E812
E813
E814
E815
E816
E817
E818
E819
E820
E821
E822
E823
E824
E825
E826
E827
E828
E829
E830
E831
E832
E833
E834
E835
E836
E837
E838
E839
E840
E841
E842
E843
E844
E845
E846
E847
E848
E849
E850
E851
E852
E853
E854
E855
E856
E857
E858
E859
E860
E861
E862
E863
E864
E865
E866
E867
E868
E869
E870
E871
E872
E873
E874
E875
E876
E877
E878
E879
E880
E881
E882
E883
E884
E885
E886
E887
E888
E889
E890
E891
E892
E893
E894
E895
E896
E897
E898
E899
E900
E901
E902
E903
E904
E905
E906
E907
E908
E909
E910
E911
E912
E913
E914
E915
E916
E917
E918
E919
E920
E921
E922
E923
E924
E925
E926
E927
E928
E929
E930
E931
E932
E933
E934
E935
E936
E937
E938
E939
E940
E941
E942
E943
E944
E945
E946
E947
E948
E949
E950
E951
E952
E953
E954
E955
E956
E957
E958
E959
E960
E961
E962
E963
E964
E965
E966
E967
E968
E969
E970
E971
E972
E973
E974
E975
E976
E977
E978
E979
E980
E981
E982
E983
E984
E985
E986
E987
E988
E989
E990
E991
E992
E993
E994
E995
E996
E997
E998
E999
E1000

Vehicle

JUMPER

Data

New

Domain

Comfort And Convenience

Function

Heated Seats

Function Diagram

Principle

Wiring

Installation

9C- 06/10/2013

SVG Viewer

Tools

History

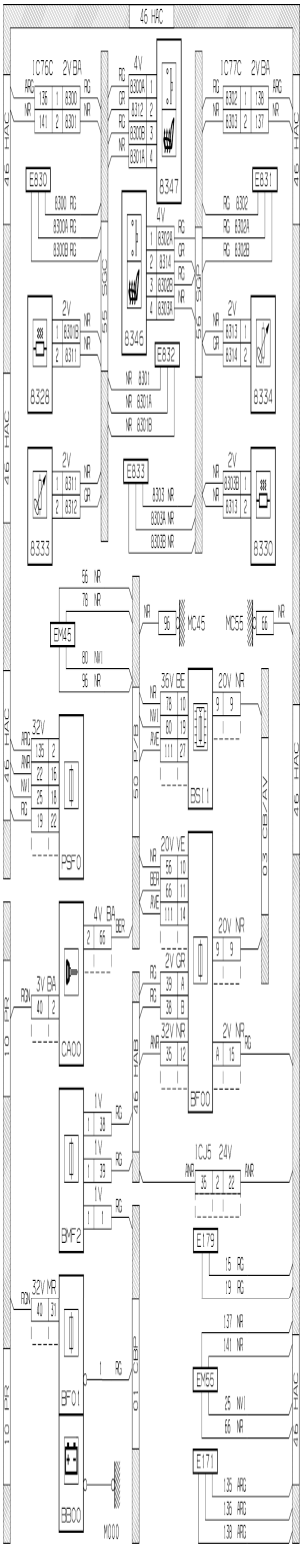
45 HAC
IC76C 2VBA
IC77C 2VBA
E830
E831
E832
E833
8347
8345
8328
8334
8333
8330
EM45
MC45
MC55
BS11
PSF0
CA00
BF00
BMF2
BF01
BB00
M000
IC J5 24V
E179
EM55
E171
03 CB7AV
10 HR
01 CBP

D3ARM4GG

Vehicle

JUMPER

Data

New

Domain

Comfort And Convenience

Function

Heated Seats

Function Diagram

Principle

Wiring

Installation

9C- 06/10/2013

SVG Viewer

Tools

History

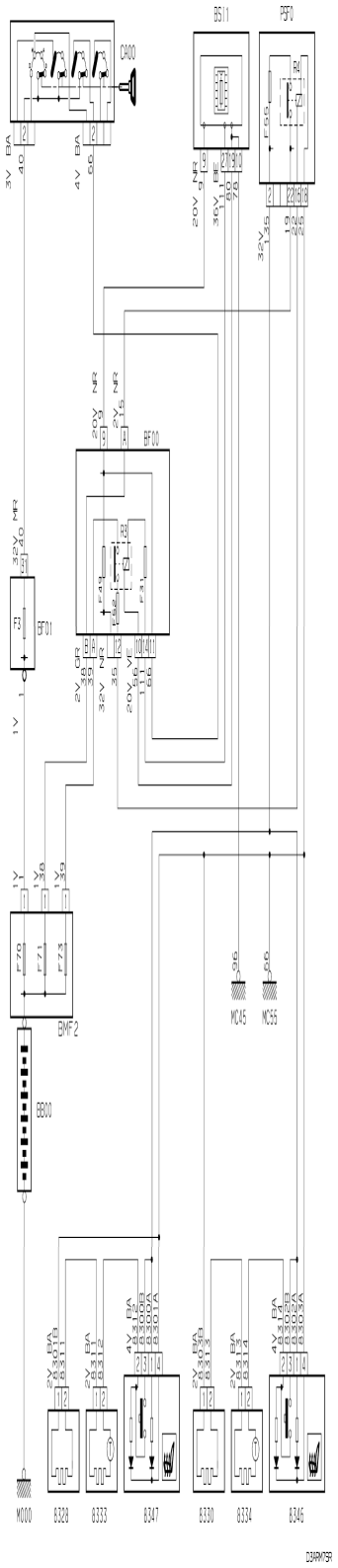
BS11
PSF0
C400
BF00
BF01
BMF2
BB00
M000
8328
8333
8347
8330
8334
8346

Vehicle

JUMPER

Data

New

Domain

Comfort And Convenience

Function

Heated Rear Screen / Heated Rear View Mirrors

Function Diagram

Principle

Synopsis

Wiring

Installation

9C- 06/10/2013

SVG Viewer

Tools

History

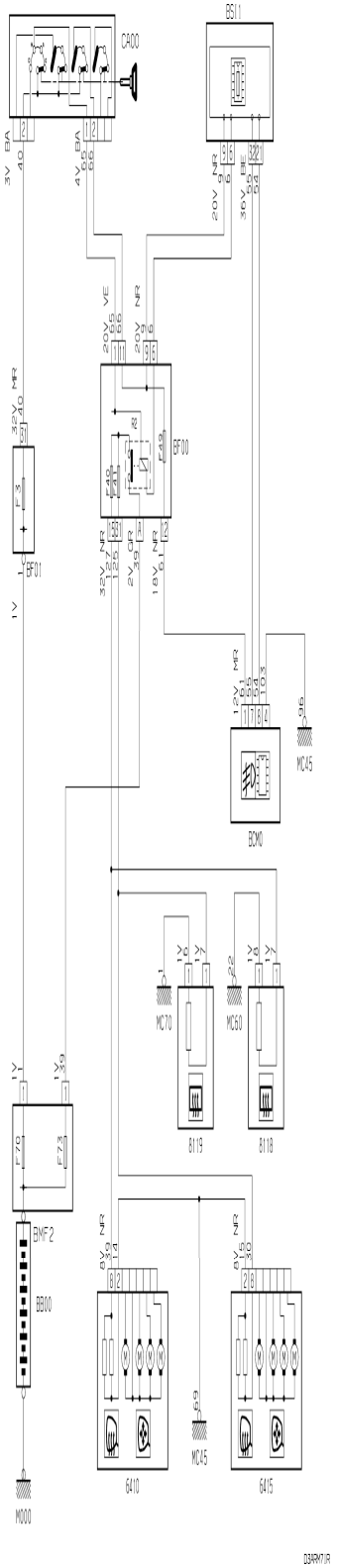
CA00
BSI1
BF00
BF01
BCM0
MC45
MC70
MC60
8119
8118
BMF2
BB00
6410
6415
MC45
M000
D3ARM71R

Vehicle

JUMPER

Data

New

Domain

Lighting - Signalling

Function

Height Correctors And
Headlamp Correctors

Function Diagram

Principle

Wiring

Installation

9C- 06/10/2013

SVG Viewer

Tools

History

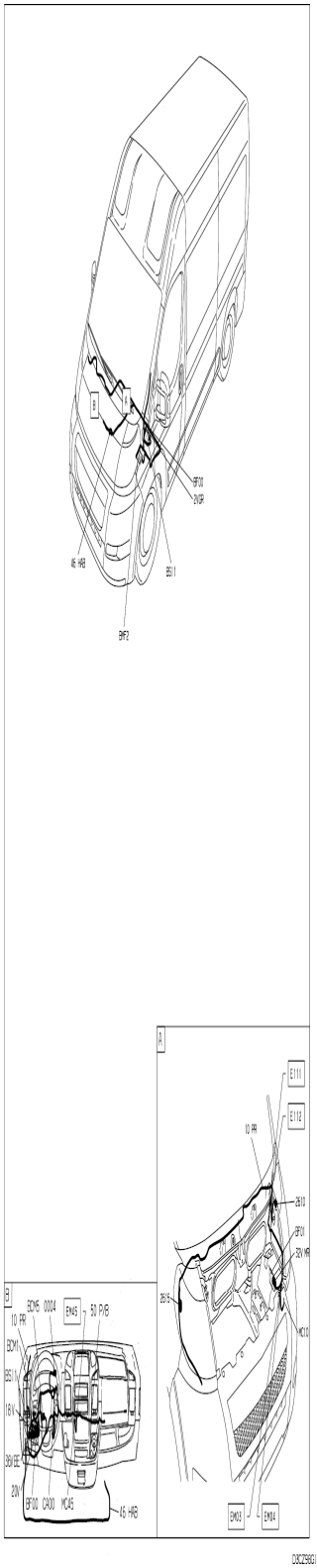
B
BF00
2V0R
45 HRB
BS11
BMF2
A
E111
E112
10 PR
2610
BF01
32V HR
2615
MC10
EM03
EM04
B
BCM5 0004
EM45
50 PVB
10 PR
BCM1
BS11
16 V
36V BE
20V
BF00 CA00 MC45
45 HRB

D3CZ98G1

Vehicle

JUMPER

Data

New

Domain

Lighting - Signalling

Function

Height Correctors And
Headlamp Correctors

Function Diagram

Principle

Wiring

Installation

9C- 06/10/2013

SVG Viewer

Tools

History

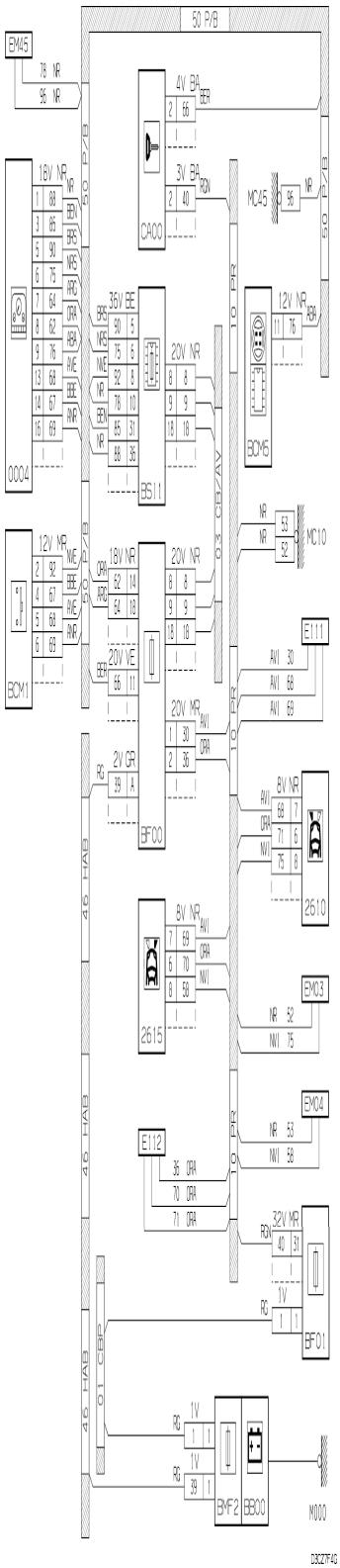
50 P/B
EM45
4V BA
3V BA
CA00
MC45
18V NR
0004
36V BE
BS11
20V NR
12V NR
BCM5
MC10
BCM1
18V NR
20V NR
20V VE
E111
20V MR
2V GR
BF00
8V NR
2610
8V NR
2615
EM03
EM04
E112
32V MR
BF01
1V
BMF2
BB00
M000
D3C27F4G

Vehicle

JUMPER

Data

New

Domain

Lighting - Signalling

Function

Height Correctors And
Headlamp Correctors

Function Diagram

Principle

Wiring

Installation

9C- 06/10/2013

SVG Viewer

Tools

History

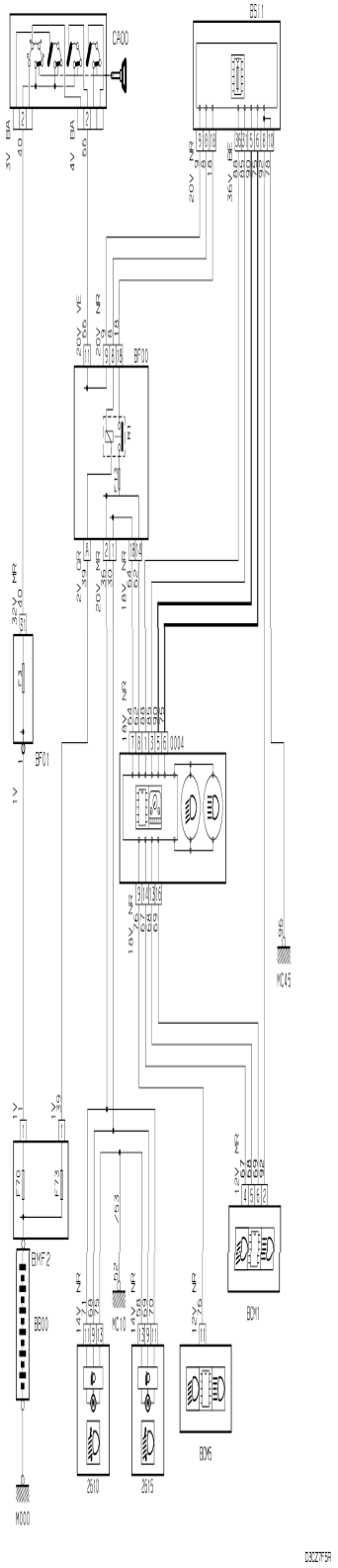
CA00
BS11
BF00
BF01
MC45
BMF2
BS00
MC10
BCM1
BCM5
2610
2615
M000
D3C27F5R

Vehicle

JUMPER

Data

New

Domain

Lighting - Signalling

Function

Horns

Function Diagram

Principle

Wiring

Installation

9C- 06/10/2013

SVG Viewer

Tools

History

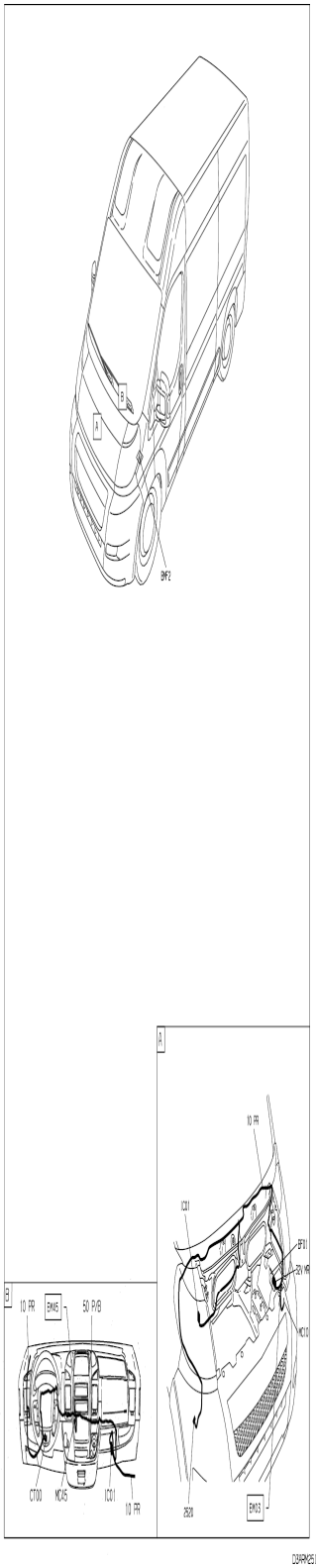
A
B
BMF2
10 PR
BMA5
50 P/B
CT00
MCA5
IC01
10 PR
IC01
BF01
ERV MR
MC10
2E20
EMD3

D3ARM251

Vehicle

JUMPER

Data

New

Domain

Lighting - Signalling

Function

Horns

Function Diagram

Principle

Wiring

Installation

9C- 06/10/2013

SVG Viewer

Tools

History

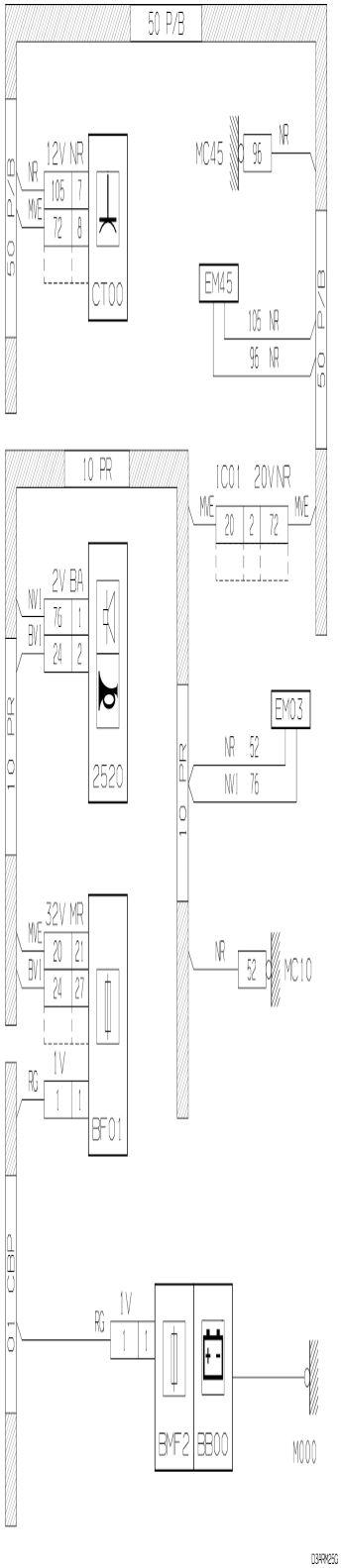
50 P/B
12V NR
NR
MVI
105 7
72 8
CT00
MC45
96
NR
EM45
105 NR
96 NR
50 P/B
50 P/B
10 PR
ICO1 20VNR
MVI
20 2 72
MVI
2V BA
MVI
BVI
76 1
24 2
2520
EM03
NR 52
MVI 76
10 PR
10 PR
32V MR
MVI
BVI
20 21
24 27
1V
RG
1 1
BF01
NR
52
MC10
61 CBAP
RG
1V
1 1
BMF2
BB00
M000
D34PM2S0

Vehicle

JUMPER

Data

New

Domain

Lighting - Signalling

Function

Horns

Function Diagram

Principle

Wiring

Installation

9C- 06/10/2013

SVG Viewer

Tools

History

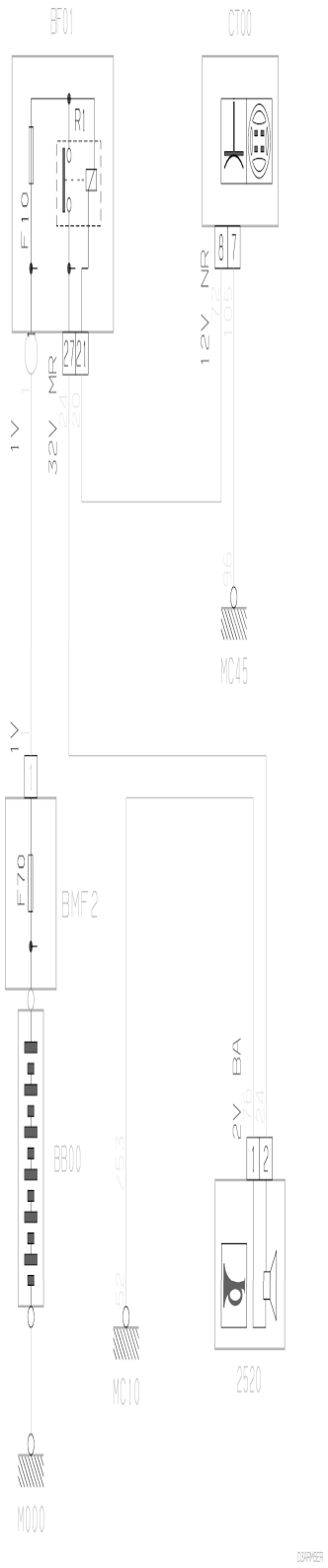
BF01
CT00
R1
F10
12V NR
32V MR
1V
MC45
F70
BMF2
BB00
2V BA
MC10
2520
M000

Vehicle

JUMPER

Data

New

Domain

Driving Assistance

Function

Hydraulic Suspension

Function Diagram

Synopsis

9C- 06/10/2013

SVG Viewer

Tools

History

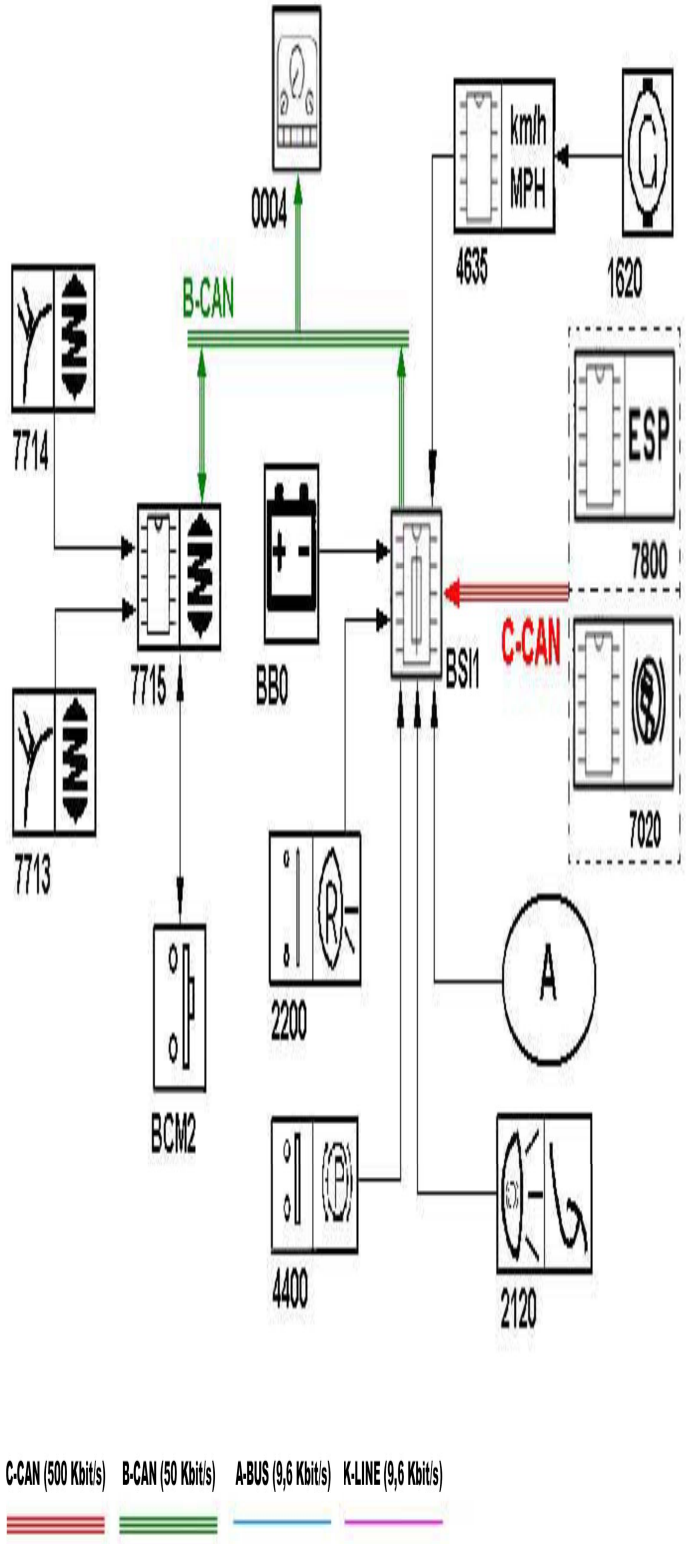
0004
km/h
MPH
4635
1620
B-CAN
7714
ESP
7800
7715
BB0
BSI1
C-CAN
7713
7920
2200
A
BCM2
4400
2120
C-CAN (500 Kbit/s)
B-CAN (50 Kbit/s)
A-BUS (9,6 Kbit/s)
K-LINE (9,6 Kbit/s)

Vehicle

JUMPER

Data

New

Domain

Driving Assistance

Function

Hydraulic Suspension

Function Diagram

Synopsis

9C- 06/10/2013

SVG Viewer

Tools

History

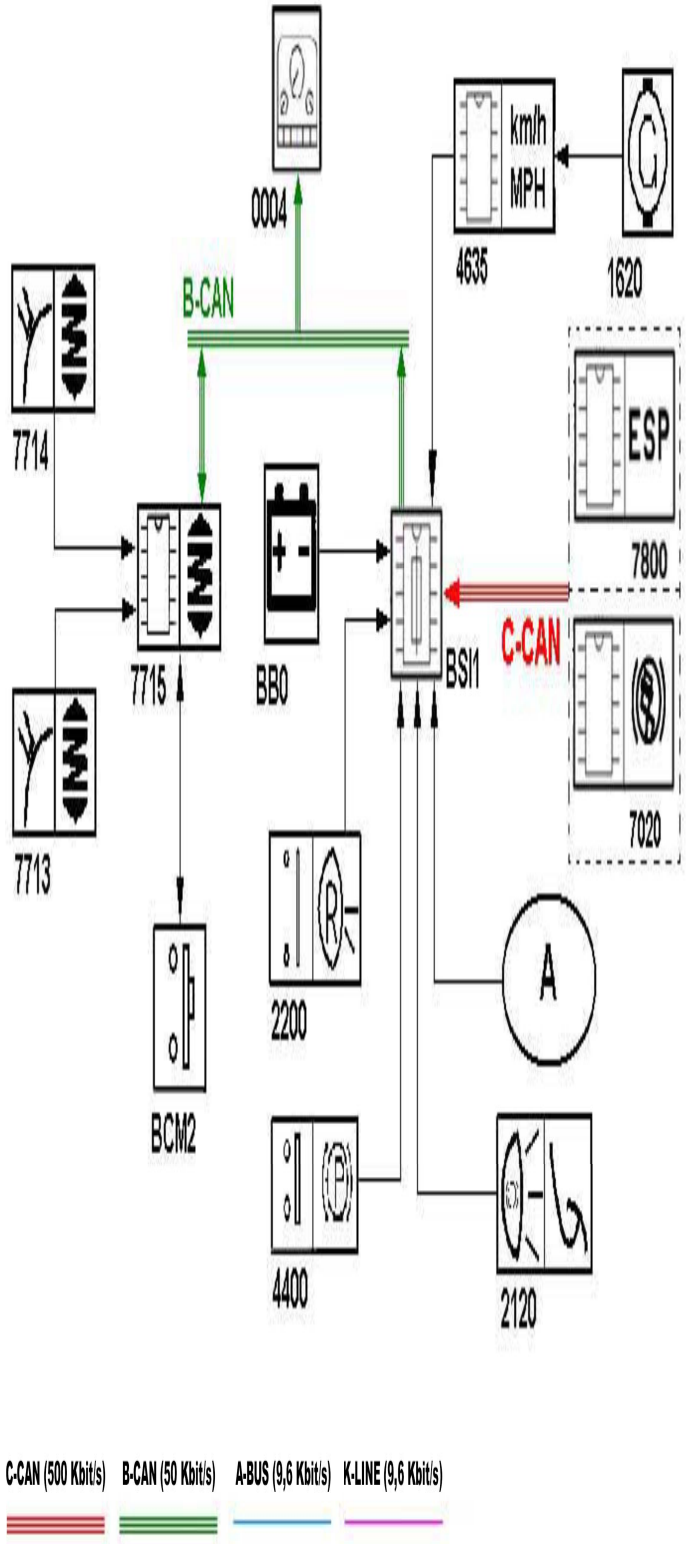
0004
km/h
MPH
4635
1620
B-CAN
7714
ESP
7800
7715
BB0
BSI1
C-CAN
7713
7920
2200
A
BCM2
4400
2120
C-CAN (500 Kbit/s)
B-CAN (50 Kbit/s)
A-BUS (9,6 Kbit/s)
K-LINE (9,6 Kbit/s)

Vehicle

JUMPER

Data

New

Domain

Protections And Doors

Function

Immobiliser

Function Diagram

Principle

Synopsis

Wiring

Installation

9C- 06/10/2013

SVG Viewer

Tools

History

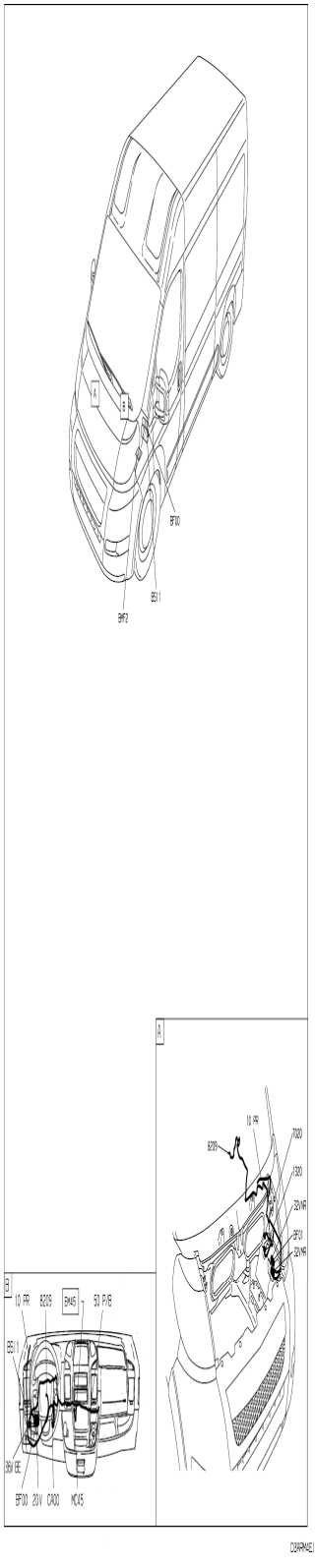
BF00
BS11
BMF2
10 PR
B209
BM45
50 PVB
BS11
36V BE
BF00 20V CA00 MC45
10 PR
B209
7020
1320
32VMR
BF01
32VMR

DIAGRAM E1

Vehicle

JUMPER

Data

New

Domain

Protections And Doors

Function

Immobiliser

Function Diagram

Principle

Synopsis

Wiring

Installation

9C- 06/10/2013

SVG Viewer

Tools

History

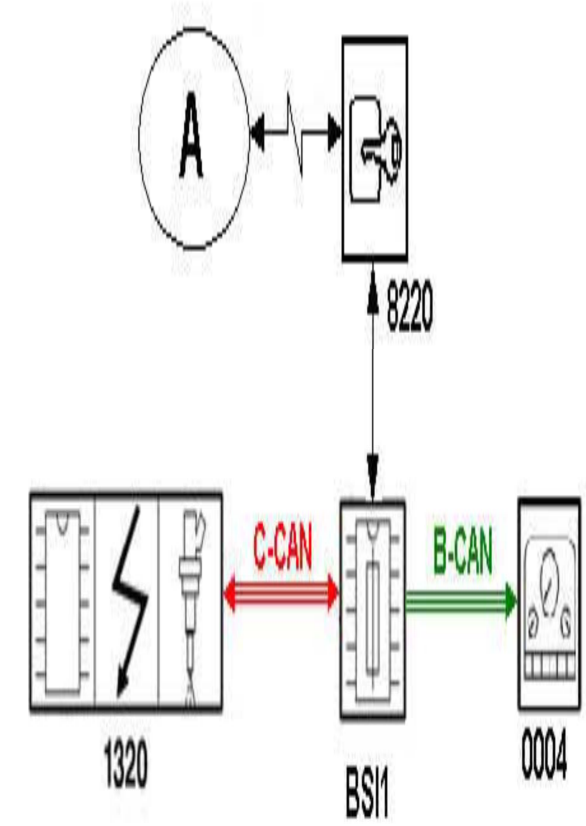
A
8220
C-CAN
B-CAN
1320
BSI1
0004

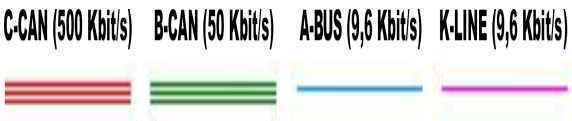
C-CAN (500 Kbit/s)
B-CAN (50 Kbit/s)
A-BUS (9,6 Kbit/s)
K-LINE (9,6 Kbit/s)

Vehicle

JUMPER

Data

New

Domain

Protections And Doors

Function

Immobiliser

Function Diagram

Principle

Synopsis

Wiring

Installation

9C- 06/10/2013

SVG Viewer

Tools

History

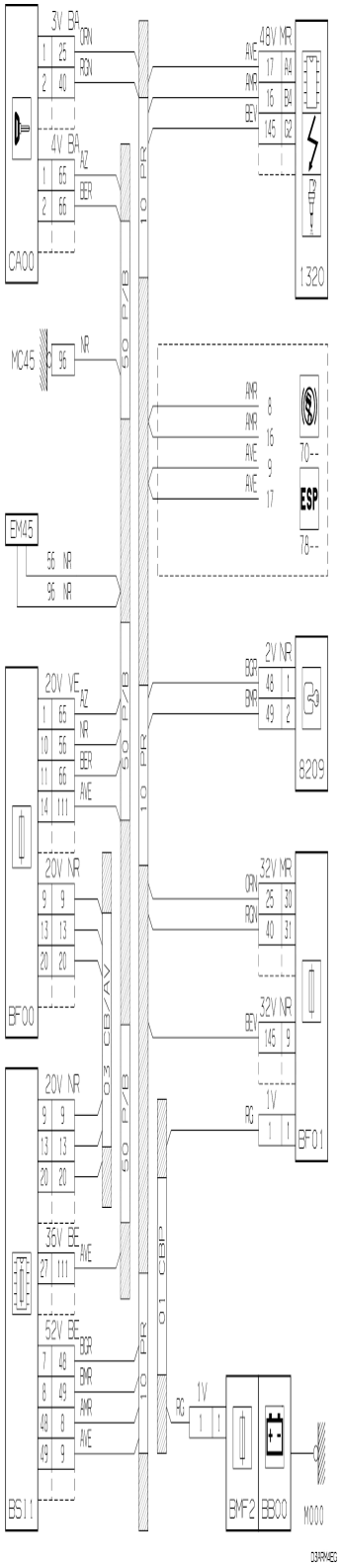
CA00
3V BA
4V BA
48V MR
1320
MC45
EM45
70--
ESP
78--
20V VE
20V NR
2V NR
8209
BF00
32V MR
32V NR
BF01
36V BE
52V BE
BS11
1V
BMF2
BB00
M000
50 P/B
10 PR
03 CB/AV
01 CBP
D3ARM4EG

Vehicle

JUMPER

Data

New

Domain

Protections And Doors

Function

Immobiliser

Function Diagram

Principle

Wiring

Installation

9C- 06/10/2013

SVG Viewer

Tools

History

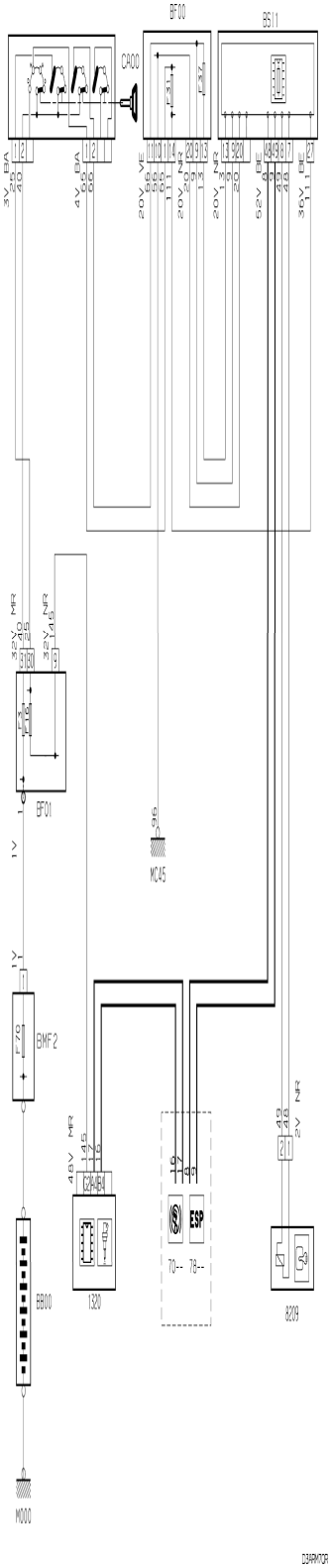
BF00
BS11
CA00
BF01
MC45
BMF2
BB00
1320
8209
M000
ESP
70-- 78--
D3ARMYCR

Vehicle

JUMPER

Data

New

Domain

Driver Information

Function

Instrument Panel Supply

Function Diagram

Principle

Wiring

9C- 06/10/2013

SVG Viewer

Tools

History

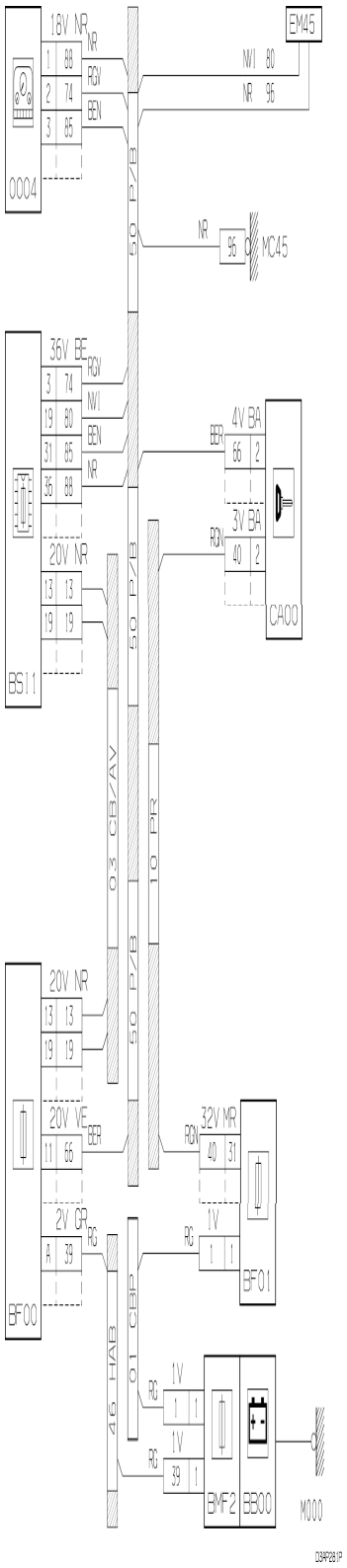
18V NR
NR
RGN
BEN
1 88
2 74
3 85
0004
EM45
NVI 80
NR 96
50 P/B
NR
96
MC45
36V BE
RGN
NVI
BEN
NR
3 74
19 80
31 85
36 88
20V NR
13 13
19 19
BS11
4V BA
BER
66 2
3V BA
RGN
40 2
CA00
03 CB/AV
10 PR
20V NR
13 13
19 19
20V VE
BER
11 66
2V GR
RG
A 39
BF00
32V MR
RGN
40 31
1V
RG
1 1
BF01
46 HAB
01 CBP
1V
RG
1 1
1V
RG
39 1
BMF2
BB00
M000
D3AP281P

Vehicle

JUMPER

Data

New

Domain

Driver Information

Function

Instrument Panel Supply

Function Diagram

Principle

Wiring

9C- 06/10/2013

SVG Viewer

Tools

History

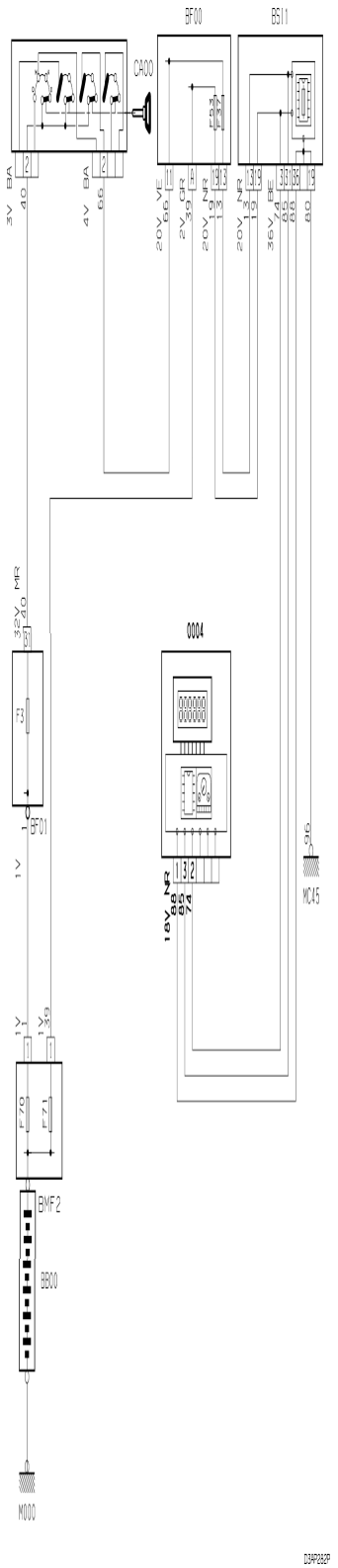
BF00
BS11
CA00
0004
BF01
BMF2
BB00
MC45
M000
D3AP2B2P

Vehicle

JUMPER

Data

New

Domain

General Points

Function

Interconnections Management

Function Diagram

General

9C- 06/10/2013

SVG Viewer

Tools

History

D3B0LUP0	INTERCONNECTIONS MANAGEMENT

IC01 interconnection : harnesses 10 PR - 50 PB (20V NR)

channel	wire no.	description	channel	wire no.	description
1			11		
2	20/72	steering wheel rotary connector	12		
3			13		
4	122/30	multifunction switch control	14	106/175	Engine management ECU
5	123/31	multifunction switch control	15		
6	63/85	inertia switch	16		
7			17		
8	66/22	control of front forward satellite sensor	18		
9	65/18	control of front forward satellite sensor	19		
10			20		

IC02 interconnection : harnesses 10 PR - 20 MOT (12V GR)

channel	wire no.	description	channel	wire no.	description
1	161/5	Starter motor control	7	1/170	engine management ECU supply
2	177/40/203	alternator excitation	8	6/164	Pre-heat plug 1 command
3	10/102	Air conditioning compressor control	9	7/165	Pre-heat plug 2 command
4	38/143	engine management ECU supply	10	8/162	Pre-heat plug 3 command
5	52/147	air flowmeter supply - reversing lamps	11	9/163	Pre-heat plug 4 command
6	148/39	reverse lamps supply	12	37/140	engine management ECU

					supply

IC08 interconnection : harnesses 10 PR - 16 GMV (2V)		
channel	wire no.	description
1	181/14	fast speed relay control
2	182/19	slow speed relay control

IC16 interconnection : harnesses 10 PR - 71G AR/G (4V NR)		
channel	wire no.	description
1	83/11	rear LH ABS sensor
2	80/10	rear LH ABS sensor
3	84/13	rear RH ABS sensor
4	81/12	rear RH ABS sensor

IC26A interconnection : harnesses 10 PR - 59 CLM (6V NR)		
channel	wire no.	description
1	38/40/50	air conditioning control
2	96/41	air conditioning control
3	29/78	air conditioning motor control
4	186/76	air conditioning heater matrix relay control
5	100/48	air conditioning relay control
6	103/35	air conditioning control

IC26B interconnection : harnesses 10 PR - 59 CLM (2V)		
channel	wire no.	description
1	197/77	air conditioning heater matrix relay control - additional heating
2		

IC91 interconnection : harnesses 50 P/B - 46 HAB (12V GR)					
channel	wire no.	description	channel	wire no.	description
1			7		
2	107/105	audio system	8		
3	95/106	audio system	9		
4	108/107	audio system	10	124/116	Radiotelephone transceiver
5	109/108	audio system	11	125/117	Radiotelephone transceiver
6	139/158	video screen supply	12		

IC98A interconnection : harnesses 50 P/B - 65 P/P (2V)		
channel	wire no.	description

1	4/110	radio supply
2		

IC98B interconnection : harnesses 50 P/B - 65 P/P (2V)		
channel	wire no.	description
1	117/6	rear view mirror aerial information
2	118/7	rear view mirror aerial information

IC98C interconnection : harnesses 50 P/B - 65 P/P (2V)		
channel	wire no.	description
1	114/8	aerial supply control
2	115/9	aerial supply control

IC98D interconnection : harnesses 50 P/B - 65 P/P (2V)		
channel	wire no.	description
1	3/27	rear view mirror aerial supply
2		

ICE4 interconnection : harnesses 50 P/B - 91 CHR/PB (12V NR)					
channel	wire no.	description	channel	wire no.	description
1	127/1	electronic tachograph converter	7	140/12	video screen supply
2	129/2	electronic tachograph converter	8	137/13	video screen supply
3	126/3	electronic tachograph converter	9	138/14	video screen supply
4			10	139/15	video screen supply
5	131/7	electronic tachograph converter	11		
6	132/10	electronic tachograph converter	12		

ICE5 interconnection : harnesses 91 CHR/PB - 90 CHR/MT (4V BA)		
channel	wire no.	description
1	1/4	vehicle speed information
2	2/5	vehicle speed information
3	3/8	vehicle speed information
4	4/9	vehicle speed information

ICH1A interconnection : harnesses 71D AR/D - 63 PARG/B (6V BA)		
channel	wire no.	description

1		
2		
3	29/2	control of all doors
4		
5		
6		

ICH1B interconnection : harnesses 71D AR/D - 63 PARG/B (2V NR)		
channel	wire no.	description
1	7/39	RH heated rear screen supply
2	6/37	earth

ICJ5A interconnection : harnesses 46 HAC - 46 HAB (24V)					
channel	wire no.	description	channel	wire no.	description
1			13		
2			14		
3			15		
4			16		
5	142/46	obstacle detection control supply	17		
6	143/45	obstacle detection control supply	18		
7			19		
8			20	144/44	obstacle detection control supply
9			21		
10	65/132	LH heated rear screen supply	22		
11	64/131	RH heated rear screen supply	23		
12			24		

ICM4A interconnection : harnesses 46 HAC - 71D AR/D (6V NR)		
channel	wire no.	description
1	142/46	obstacle detection control supply
2	143/45	obstacle detection control supply
3	65/38	LH heated rear screen supply
4	64/39	RH heated rear screen supply
5		
6	144/44	obstacle detection control supply

ICP3 interconnection : harnesses 10 PR - 98 CLA (4V NR)		
channel	wire no.	description
1	198/2	fuel pump supply - inertia switch
2	1/199	additional/autonomous heating burner
3	3/191	additional/autonomous heating burner
4	4/195	control of alternator

ICT2 interconnection : harnesses 10 PR - 17 BR/AV/D (2V NR)		
channel	wire no.	description
1	120/1	supply of front RH sidelamp - front RH foglamp supply
2	131/2	earth

ICT3 interconnection : harnesses 10 PR - 17 BR/AV/G (2V NR)		
channel	wire no.	description
1	128/1	front LH sidelamp supply - front LH foglamp supply
2	129/2	earth

ICV6 interconnection : harnesses 46 HAB - 71G AR/G (24V)					
channel	wire no.	description	channel	wire no.	description
1	109/1	rear LH sidelamp supply	13		
2	59/5	rear LH direction indicator lamp supply	14	43/7	reverse lamps supply (cab)
3	68/8	RH stoplamp supply (cab)	15		
4			16		
5	110/9	rear RH sidelamp supply	17	113/2	number plate lamps supply
6			18	60/3	rear RH direction indicator lamp supply (cab)
7			19	67/4	LH stoplamp supply (cab)
8			20	66/6	rear foglamps supply
9			21		
10			22		
11			23		
12			24		

ICV7 interconnection : harnesses 46 HAB - 71D AR/D (24V)					
channel	wire no.	description	channel	wire no.	description

1	9/109	rear RH sidelamp supply	13		
2			14	20/78	rear interior lamp control
3	65/08	RH stoplamp supply	15	19/68	exterior boot opening switch information
4	63/11	rear foglamps supply	16		
5	25/110	number plate lamps supply - earth	17	113/7	rear LH sidelamp supply
6	42/13	third stoplamp supply	18		
7			19	67/6	LH stoplamp supply
8	41/139	socket lighting supply (van)	20	66/4	rear LH sidelamp supply
9	42/138	socket supply (van)	21	115/3	LH reversing lamp supply
10			22		
11			23		
12			24	43/50	RH reversing lamp supply - rear obstacle detection signal

ICW2 interconnection : harnesses 71 ARC - 71D AR/D (6V BA)		
channel	wire no.	description
1		
2		
3	26/8	RH sliding side door switch
4		
5		
6		

ICW3A interconnection : harnesses 71D AR/D - 61 PARG/B (2V)		
channel	wire no.	description
1	25/5	number plate lamps supply
2	21/6	earth

ICW3B interconnection : harnesses 71D AR/D - 61 PARG/B (2V NR)		
channel	wire no.	description
1	7/38	LH heated rear screen supply
2	8/40	earth

ICW4 interconnection : harnesses 97 DEP - 71D AR/D (2V)		
channel	wire no.	description

1	7/49	rear obstacle detection signal - earth
2	8/51	obstacle detection control supply

ICW5A interconnection : harnesses 71 AR/G - 32 SUSP (2V NR)		
channel	wire no.	description
A	26/12	suspension control unit (power)
B	19/13	suspension ECU earth (power)

ICW5B interconnection : harnesses 71 AR/G - 32 SUSP (12V GR)					
channel	wire no.	description	channel	wire no.	description
1			7		
2	25/14	suspension control unit (control)	8	21/3	suspension descent signal
3	27/11	suspension ECU earth (control)	9	22/6	suspension descent led control
4	28/15	BUS CAN B	10	23/8	suspension ascent signal
5	29/16	BUS CAN A	11	24/5	suspension ascent led control
6			12		

ICW6 interconnection : harnesses 71G AR/G - 00 DIV1 (12V NR)					
channel	wire no.	description	channel	wire no.	description
1			7	8/6	LH stoplamp supply (cab)
2	2/1	rear LH sidelamp supply	8		
3	1/4	rear RH sidelamp supply	9	6/17	rear foglamps supply
4	2/3	rear LH direction indicator lamp supply (cab)	10		
5	5/5	rear RH direction indicator lamp supply (cab)	11	9/14	number plate lamps supply
6	4/3	RH stoplamp supply (cab)	12	7/18	reverse lamps supply (cab)

ICW8 interconnection : harnesses 97 DEP - 71D AR/D (2V)		
channel	wire no.	description
1	7/2	rear obstacle detection signal - earth
2	8/1	obstacle detection control supply

ICW9 interconnection : harnesses 97 DEP - 80 AR/SP (6V NR)		

channel	wire no.	description
1	1/9	rear obstacle detection sensor signal
2	2/10	rear obstacle detection sensor signal
3	3/11	rear obstacle detection sensor signal
4	4/12	rear obstacle detection sensor information (-)
5	5/13	rear obstacle detection sensor signal
6	6/1	rear obstacle detection sensor information (+)

Vehicle

JUMPER

Data

New

Domain

General Points

Function

Interconnections Management

Function Diagram

General

9C- 06/10/2013

SVG Viewer

Tools

History

D3B0LUP0	INTERCONNECTIONS MANAGEMENT

IC01 interconnection : harnesses 10 PR - 50 PB (20V NR)

channel	wire no.	description	channel	wire no.	description
1			11		
2	20/72	steering wheel rotary connector	12		
3			13		
4	122/30	multifunction switch control	14	106/175	Engine management ECU
5	123/31	multifunction switch control	15		
6	63/85	inertia switch	16		
7			17		
8	66/22	control of front forward satellite sensor	18		
9	65/18	control of front forward satellite sensor	19		
10			20		

IC02 interconnection : harnesses 10 PR - 20 MOT (12V GR)

channel	wire no.	description	channel	wire no.	description
1	161/5	Starter motor control	7	1/170	engine management ECU supply
2	177/40/203	alternator excitation	8	6/164	Pre-heat plug 1 command
3	10/102	Air conditioning compressor control	9	7/165	Pre-heat plug 2 command
4	38/143	engine management ECU supply	10	8/162	Pre-heat plug 3 command
5	52/147	air flowmeter supply - reversing lamps	11	9/163	Pre-heat plug 4 command
6	148/39	reverse lamps supply	12	37/140	engine management ECU

					supply

IC08 interconnection : harnesses 10 PR - 16 GMV (2V)		
channel	wire no.	description
1	181/14	fast speed relay control
2	182/19	slow speed relay control

IC16 interconnection : harnesses 10 PR - 71G AR/G (4V NR)		
channel	wire no.	description
1	83/11	rear LH ABS sensor
2	80/10	rear LH ABS sensor
3	84/13	rear RH ABS sensor
4	81/12	rear RH ABS sensor

IC26A interconnection : harnesses 10 PR - 59 CLM (6V NR)		
channel	wire no.	description
1	38/40/50	air conditioning control
2	96/41	air conditioning control
3	29/78	air conditioning motor control
4	186/76	air conditioning heater matrix relay control
5	100/48	air conditioning relay control
6	103/35	air conditioning control

IC26B interconnection : harnesses 10 PR - 59 CLM (2V)		
channel	wire no.	description
1	197/77	air conditioning heater matrix relay control - additional heating
2		

IC91 interconnection : harnesses 50 P/B - 46 HAB (12V GR)					
channel	wire no.	description	channel	wire no.	description
1			7		
2	107/105	audio system	8		
3	95/106	audio system	9		
4	108/107	audio system	10	124/116	Radiotelephone transceiver
5	109/108	audio system	11	125/117	Radiotelephone transceiver
6	139/158	video screen supply	12		

IC98A interconnection : harnesses 50 P/B - 65 P/P (2V)		
channel	wire no.	description

1	4/110	radio supply
2		

IC98B interconnection : harnesses 50 P/B - 65 P/P (2V)		
channel	wire no.	description
1	117/6	rear view mirror aerial information
2	118/7	rear view mirror aerial information

IC98C interconnection : harnesses 50 P/B - 65 P/P (2V)		
channel	wire no.	description
1	114/8	aerial supply control
2	115/9	aerial supply control

IC98D interconnection : harnesses 50 P/B - 65 P/P (2V)		
channel	wire no.	description
1	3/27	rear view mirror aerial supply
2		

ICE4 interconnection : harnesses 50 P/B - 91 CHR/PB (12V NR)					
channel	wire no.	description	channel	wire no.	description
1	127/1	electronic tachograph converter	7	140/12	video screen supply
2	129/2	electronic tachograph converter	8	137/13	video screen supply
3	126/3	electronic tachograph converter	9	138/14	video screen supply
4			10	139/15	video screen supply
5	131/7	electronic tachograph converter	11		
6	132/10	electronic tachograph converter	12		

ICE5 interconnection : harnesses 91 CHR/PB - 90 CHR/MT (4V BA)		
channel	wire no.	description
1	1/4	vehicle speed information
2	2/5	vehicle speed information
3	3/8	vehicle speed information
4	4/9	vehicle speed information

ICH1A interconnection : harnesses 71D AR/D - 63 PARG/B (6V BA)		
channel	wire no.	description

1		
2		
3	29/2	control of all doors
4		
5		
6		

ICH1B interconnection : harnesses 71D AR/D - 63 PARG/B (2V NR)		
channel	wire no.	description
1	7/39	RH heated rear screen supply
2	6/37	earth

ICJ5A interconnection : harnesses 46 HAC - 46 HAB (24V)					
channel	wire no.	description	channel	wire no.	description
1			13		
2			14		
3			15		
4			16		
5	142/46	obstacle detection control supply	17		
6	143/45	obstacle detection control supply	18		
7			19		
8			20	144/44	obstacle detection control supply
9			21		
10	65/132	LH heated rear screen supply	22		
11	64/131	RH heated rear screen supply	23		
12			24		

ICM4A interconnection : harnesses 46 HAC - 71D AR/D (6V NR)		
channel	wire no.	description
1	142/46	obstacle detection control supply
2	143/45	obstacle detection control supply
3	65/38	LH heated rear screen supply
4	64/39	RH heated rear screen supply
5		
6	144/44	obstacle detection control supply

ICP3 interconnection : harnesses 10 PR - 98 CLA (4V NR)		
channel	wire no.	description
1	198/2	fuel pump supply - inertia switch
2	1/199	additional/autonomous heating burner
3	3/191	additional/autonomous heating burner
4	4/195	control of alternator

ICT2 interconnection : harnesses 10 PR - 17 BR/AV/D (2V NR)		
channel	wire no.	description
1	120/1	supply of front RH sidelamp - front RH foglamp supply
2	131/2	earth

ICT3 interconnection : harnesses 10 PR - 17 BR/AV/G (2V NR)		
channel	wire no.	description
1	128/1	front LH sidelamp supply - front LH foglamp supply
2	129/2	earth

ICV6 interconnection : harnesses 46 HAB - 71G AR/G (24V)					
channel	wire no.	description	channel	wire no.	description
1	109/1	rear LH sidelamp supply	13		
2	59/5	rear LH direction indicator lamp supply	14	43/7	reverse lamps supply (cab)
3	68/8	RH stoplamp supply (cab)	15		
4			16		
5	110/9	rear RH sidelamp supply	17	113/2	number plate lamps supply
6			18	60/3	rear RH direction indicator lamp supply (cab)
7			19	67/4	LH stoplamp supply (cab)
8			20	66/6	rear foglamps supply
9			21		
10			22		
11			23		
12			24		

ICV7 interconnection : harnesses 46 HAB - 71D AR/D (24V)					
channel	wire no.	description	channel	wire no.	description

1	9/109	rear RH sidelamp supply	13		
2			14	20/78	rear interior lamp control
3	65/08	RH stoplamp supply	15	19/68	exterior boot opening switch information
4	63/11	rear foglamps supply	16		
5	25/110	number plate lamps supply - earth	17	113/7	rear LH sidelamp supply
6	42/13	third stoplamp supply	18		
7			19	67/6	LH stoplamp supply
8	41/139	socket lighting supply (van)	20	66/4	rear LH sidelamp supply
9	42/138	socket supply (van)	21	115/3	LH reversing lamp supply
10			22		
11			23		
12			24	43/50	RH reversing lamp supply - rear obstacle detection signal

ICW2 interconnection : harnesses 71 ARC - 71D AR/D (6V BA)		
channel	wire no.	description
1		
2		
3	26/8	RH sliding side door switch
4		
5		
6		

ICW3A interconnection : harnesses 71D AR/D - 61 PARG/B (2V)		
channel	wire no.	description
1	25/5	number plate lamps supply
2	21/6	earth

ICW3B interconnection : harnesses 71D AR/D - 61 PARG/B (2V NR)		
channel	wire no.	description
1	7/38	LH heated rear screen supply
2	8/40	earth

ICW4 interconnection : harnesses 97 DEP - 71D AR/D (2V)		
channel	wire no.	description

1	7/49	rear obstacle detection signal - earth
2	8/51	obstacle detection control supply

ICW5A interconnection : harnesses 71 AR/G - 32 SUSP (2V NR)		
channel	wire no.	description
A	26/12	suspension control unit (power)
B	19/13	suspension ECU earth (power)

ICW5B interconnection : harnesses 71 AR/G - 32 SUSP (12V GR)					
channel	wire no.	description	channel	wire no.	description
1			7		
2	25/14	suspension control unit (control)	8	21/3	suspension descent signal
3	27/11	suspension ECU earth (control)	9	22/6	suspension descent led control
4	28/15	BUS CAN B	10	23/8	suspension ascent signal
5	29/16	BUS CAN A	11	24/5	suspension ascent led control
6			12		

ICW6 interconnection : harnesses 71G AR/G - 00 DIV1 (12V NR)					
channel	wire no.	description	channel	wire no.	description
1			7	8/6	LH stoplamp supply (cab)
2	2/1	rear LH sidelamp supply	8		
3	1/4	rear RH sidelamp supply	9	6/17	rear foglamps supply
4	2/3	rear LH direction indicator lamp supply (cab)	10		
5	5/5	rear RH direction indicator lamp supply (cab)	11	9/14	number plate lamps supply
6	4/3	RH stoplamp supply (cab)	12	7/18	reverse lamps supply (cab)

ICW8 interconnection : harnesses 97 DEP - 71D AR/D (2V)		
channel	wire no.	description
1	7/2	rear obstacle detection signal - earth
2	8/1	obstacle detection control supply

ICW9 interconnection : harnesses 97 DEP - 80 AR/SP (6V NR)		

channel	wire no.	description
1	1/9	rear obstacle detection sensor signal
2	2/10	rear obstacle detection sensor signal
3	3/11	rear obstacle detection sensor signal
4	4/12	rear obstacle detection sensor information (-)
5	5/13	rear obstacle detection sensor signal
6	6/1	rear obstacle detection sensor information (+)

Vehicle

JUMPER

Data

New

Domain

Comfort And Convenience

Function

Lighter And 12V Socket

Function Diagram

Principle

Wiring

Installation

9C- 06/10/2013

SVG Viewer

Tools

History

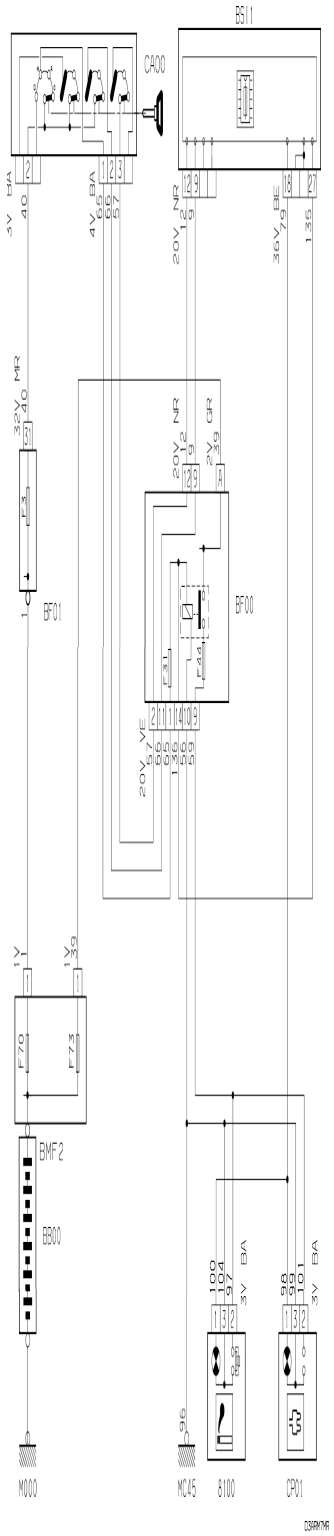
BS11
CA00
BF01
BF00
BMF2
BB00
M000
MC45
8100
CP01

Vehicle

JUMPER
Data
New

Domain

General Points

Function

Management Of Splices

Function Diagram

General

9C- 06/10/2013

SVG Viewer
Tools
History

D3B0LTP0	MANAGEMENT OF SPLICES

harness 00 DIV1					
splice	wire no.	connection 1	instrument reference	connection 2	instrument reference
E344	14	built-in systems interface	BSI1	E344	
-	9	E344		number plate right-hand lamp	2633
-	7	E344		number plate lamp	2636
-					
EM95	13	earth	MC95	EM95	
-	10	EM95		left-hand tail lamp	2630
-	8	EM95		number plate right-hand lamp	2633
-	11	EM95		right-hand tail lamp	2635
-	12	EM95		number plate lamp	2636

harness 10 PR					
splice	wire no.	connection 1	instrument reference	connection 2	instrument reference
E100	146	passenger compartment fuse box	BF00	E100	
-	167	E100		water in fuel sensor	4050
-	168	E100		cruise control safety switch (clutch)	7306
-					
E111	30	passenger compartment fuse box	BF00	E111	
-	68	E111		Left hand headlamp	2610
-	69	E111		Right hand headlamp	2615
-					

E112	36	passenger compartment fuse box	BF00	E112	
-	70	E112		Right hand headlamp	2615
-	71	E112		Left hand headlamp	2610
-					
E113	73	built-in systems interface	BSI1	E113	
-	72	E113		inertia switch	1203
-	85	E113		passenger compartment fuse box	BF00
-	166	E113		Engine management ECU	1320
-					
E114	95	built-in systems interface	BSI1	E114	
-	91	E114		variable power steering ECU	7105
-	94	E114		anti-lock brake control unit	7020
-	94	E114		ESP ECU	7800
-					
E117	179	engine compartment fuse box	BF01	E117	
-	180	E117		Engine management ECU	1320
-					
E118	187	built-in systems interface	BSI1	E118	
-	195	E118		outside air thermistor	8032
-	203	E118		alternator	1020
-					
E119	32	passenger compartment fuse box	BF00	E119	
-	41	E119		stoplamp switch	2100
-	79	E119		anti-lock brake control unit	7020
-	79	E119		ESP ECU	7800
-	121	E119		ESP flywheel angle	7803

				sensor	
-	124	E119		ESP accelerometer gyroscope	7804

harness 10 PR (continued)					
splice	wire no.	connection 1	instrument reference	connection 2	instrument reference
E120	35	passenger compartment fuse box	BF00	E120	
-	82	E120		anti-lock brake control unit	7020
-	82	E120		ESP ECU	7800
-	174	E120		Engine management ECU	1320
-					
E121	185	engine compartment fuse box	BF01	E121	
-	193	E121		inertia switch	1203
-	198	E121		additional heating fuel pump	8093
-					
E122	20	built-in systems interface	BSI1	E122	
-	201	E122		additional heating control panel	8088
-					
EM02	171	earth	MM01	EM02	
-	169	EM02		Engine management ECU	1320
-	170	EM02		EM02A (20 MOT)	
-	172	EM02		water in fuel sensor	4050
-	173	EM02		heater unit	1150
-					
EM03	52	earth	MC10	EM03	
-	23	EM03		engine compartment fuse box	BF01
-	74	EM03		Left hand headlamp	2610
-	75	EM03		Left hand headlamp	2610
-	76	EM03		horns	2520
-	125	EM03		ESP accelerometer gyroscope	7804

-	126	EM03		ESP flywheel angle sensor	7803
-	129	EM03		left-hand front fog lamp	2670
-	133	EM03		inertia switch	1203
-	137	EM03		headlamp wash pump	5405
-	192	EM03		inertia switch	1203
-					
EM04	53	earth	MC10	EM04	
-	1	EM04		anti-theft alarm system bonnet switch	8611
-	5	EM04		alarm siren	8605
-	58	EM04		Right hand headlamp	2615
-	59	EM04		Right hand headlamp	2615
-	64	EM04		brake fluid level switch	4410
-	67	EM04		engine coolant level switch	4010
-	77	EM04		windscreen wiper motor	5015
-	78	EM04		windscreen wash pump	5100
-	91	EM04		variable power steering ECU	7105
-	131	EM04		right-hand front fog lamp	2675
-	188	EM04		additional heating control panel	8088
-	196	EM04		additional/autonomous heating burner	8099

harness 16 GMV					
splice	wire no.	connection 1	instrument reference	connection 2	instrument reference
E160	12	high speed fan supply relay	1509	E160	
-	11	E160		cooling fan 2-speed resistance	1506
-	13	E160		left-hand fan	1512
-					
EB07	10	engine compartment fuse box	BF01	EB07	
-	7	EB07		high speed fan supply relay	1509
-	8	EB07		cooling fan 2-speed resistance	1506
-	9	EB07		high speed fan supply relay	1509

harness 20 MOT (2.2 HDI)					
splice	wire no.	connection 1	instrument reference	connection 2	instrument reference
E100A	52	passenger compartment fuse box	BF00	E100A	
-	36	E100A		air flowmeter	1310
-	51	E100A		reverse lamp switch	2200
-					
E102	26	Engine management ECU	1320	E102	
-	27	E102		Injector cylinder 1	1331
-	28	E102		Injector cylinder 4	1334
-					
E103	29	Engine management ECU	1320	E103	
-	30	E103		Injector cylinder 2	1332
-	31	E103		Injector cylinder 3	1333
-					
E104	23	Engine management ECU	1320	E104	
-	21	E104		electric EGR electrovalve	1297
-	22	E104		Inlet air pressure sensor	1312
-					
E105	33	Engine management ECU	1320	E105	
-	34	E105		electric EGR electrovalve	1297
-	35	E105		diesel fuel temperature sensor	1221
-					
EM02A	1	EM02 (10 PR)		EM02A	
-	3	EM02A		Engine management ECU	1320
-	4	EM02A		Engine management ECU	1320

harness 46 HAB					
splice	wire no.	connection 1	instrument reference	connection 2	instrument reference
E140	119	central locking control unit	6235	E140	
-	120	E140		driver´s door lock assembly	6202
-	121	E140		passenger´s door lock assembly	6207
-					
E141	159	passenger compartment fuse box	BF00	E141	
-	157	E141		left-hand tail lamp	2630
-	158	E141		parking assistance video screen	7522
-					
E142	45	passenger compartment fuse box	BF00	E142	
-	77	E142		roof console + integrated functions	3015
-	78	E142		E142A (71D AR/D)	
-					
E143	125	passenger compartment fuse box	BF00	E143	
-	126	E143		Passenger's door mirror	6415
-	130	E143		RH rear heated window	8119
-					
E144	41	passenger compartment fuse box	BF00	E144	
-	79	E144		E144A (60 P/C)	
-	99	E144		passenger´s electric window switch	6004
-					
E145	127	passenger compartment fuse box	BF00	E145	

-	128	E145		LH rear heated window	8118
-	129	E145		driver´s side rear view mirror	6410
-					
E146	81	central locking control unit	6235	E146	
-	114	E146		rear RH hinged door lock assembly	6218
-	80	E146		E146A (71 AR C)	
-					
E147	33	built-in systems interface	BSI1	E147	
-	32	E147		rain/sunlight sensor	5007
-	34	E147		anti-lift switch	8618
-					
E148	107	audio system	8410	E148	
-	71	E148		front LH tweeter speaker	8440
-	96	E148		driver´s front door speaker	8420
-					
E149	108	audio system	8410	E149	
-	97	E149		driver´s front door speaker	8420
-	72	E149		front LH tweeter speaker	8440
-					
E150	105	audio system	8410	E150	
-	88	E150		passenger´s front door speaker	8425
-	89	E150		front RH tweeter speaker	8445
-					
E151	106	audio system	8410	E151	
-	90	E151		front RH tweeter speaker	8445
-	104	E151		passenger´s front door speaker	8425

harness 46 HAB (continued)					
splice	wire no.	connection 1	instrument reference	connection 2	instrument reference

E152	142	built-in systems interface	BSI1	E152	
-	143	E152		parking assistance video screen	7522
-					
EM45A	69	earth	MC45B	EM45A	
-	30	EM45A		anti-lift switch	8618
-	74	EM45A		fuel gauge pump	1211
-	82	EM45A		EM45B (60 P/C)	
-	83	EM45A		EM45C (65 P/P)	
-	84	EM45A		central locking control unit	6235
-	85	EM45A		front LH electric window unit + motor	6052
-	86	EM45A		electric window/rear view mirror control panel on driver´s door	6036
-	87	EM45A		roof console + integrated functions	3015
-	100	EM45A		front RH electric window unit + motor	6051
-	103	EM45A		passenger´s electric window switch	6004
-	149	EM45A		rain/sunlight sensor	5007

harness 46 HAC					
splice	wire no.	connection 1	instrument reference	connection 2	instrument reference
E171	135	passenger compartment fusebox panel	PSF0	E171	
-	136	E171		driver´s heated seat	8310
-	138	E171		passenger´s heated seat	8315
-					
E172	86	passenger compartment fuse box	BF00	E172	
-	84	E172		RH multifunction switch block	BCM2
-	139	E172		driver´s heated seat	8310

-	140	E172		passenger´s heated seat	8315
-	145	E172		parking assistance ECU	7500
-					
E179	15	passenger compartment fuse box	BF00	E179	
-	16	E179		passenger compartment fusebox panel	PSF0
-	19	E179		passenger compartment fusebox panel	PSF0
-					
EM55	66	earth	MC55	EM55	
-	25	EM55		passenger compartment fusebox panel	PSF0
-	51	EM55		air conditioned central storage	8029
-	78	EM55		RH multifunction switch block	BCM2
-	81	EM55		RH multifunction switch block	BCM2
-	85	EM55		RH multifunction switch block	BCM2
-	137	EM55		passenger´s heated seat	8315
-	141	EM55		driver´s heated seat	8310

harness 50 P/B					
splice	wire no.	connection 1	instrument reference	connection 2	instrument reference
E200	38	passenger compartment fuse box	BF00	E200	
-	42	E200		Radiotelephone transceiver	8480
-	44	E200		mixed equipotential terminal 2	B002
-					
E201	45	passenger compartment fuse	BF00	E201	

		box			
-	43	E201		mixed equipotential terminal 2	B002
-	46	E201		Radiotelephone transceiver	8480
-					
E202	79	intelligent slave unit	BSI1	E202	
-	60	E202		passenger compartment fuse box	BF00
-	94	E202		audio system	8410
-	98	E202		mixed equipotential terminal 2	CP01
-	100	E202		front cigar lighter	8100
-	126	E202		electronic tachograph converter	4635
-					
E203	135	intelligent slave unit	BSI1	E203	
-	136	E203		passenger compartment fuse box	BF00
-	137	E203		parking assistance video screen	7522
-					
E204	59	passenger compartment fuse box	BF00	E204	
-	97	E204		front cigar lighter	8100
-	101	E204		forward 12 V socket	CP01
-					
E205	47	passenger compartment fuse box	BF00	E205	
-	35	E205		audio system	8410
-	53	E205		steering wheel rotary connector	CT00
-	122	E205		Radiotelephone transceiver	8480
-					
E206	39	passenger compartment fuse	BF00	E206	

		box			
-	40	E206		audio system	8410
-	41	E206		Radiotelephone transceiver	8480
-					
EM45	96	earth	MC45A	EM45	
-	49	EM45		steering wheel rotary connector	CT00
-	56	EM45		passenger compartment fuse box	BF00
-	78	EM45		intelligent slave unit	BSI1
-	80	EM45		intelligent slave unit	BSI1
-	99	EM45		forward 12 V socket	CP01
-	105	EM45		steering wheel rotary connector	CT00
-	102	EM45		audio system	8410
-	103	EM45		multifunction switch block	BCM0
-	104	EM45		front cigar lighter	8100
-	119	EM45		Radiotelephone transceiver	8480
-	131	EM45		electronic tachograph converter	4635
-	138	EM45		parking assistance video screen	7522

harness 59 CLM					
splice	wire no.	connection 1	instrument reference	connection 2	instrument reference
E230	34	air conditioning switch	8000	E230	
-	33	E230		blower speed rheostat	8040
-	37	E230		blower motor resistor (if separated)	8046
-	58	E230		blower motor resistor (if separated)	8046
-	59	E230		blower speed rheostat	8040
-	67	E230		Blower motor	8050
-					
E232	77	additional/autonomous heating burner	8099	E232	
-	70	E232		additional/autonomous heating control relay	8091

-	72	E232		heating/air conditioning unit relay	8061
-					
E233	75	engine compartment fuse box	BF01	E233	
-	73	E233		heating/air conditioning unit relay	8061
-	74	E233		Blower motor	8050
-					
E234	51	blower speed rheostat	8040	E234	
-	53	E234		blower motor resistor (if separated)	8046
-	54	E234		additional/autonomous heating control relay	8091
-	62	E234		additional/autonomous heating control relay	8091
-	65	E234		blower motor resistor (if separated)	8046
-	66	E234		blower speed rheostat	8040
-					
E235	40	passenger compartment fuse box	BF00	E235	
-	38	E235		air conditioning switch	8000
-	39	E235		heater control panel lamp	3051
-					
EM50	42/43	earth	MC50	EM50	
-	36	EM50		air conditioning switch	8000
-	44	EM50		blower speed rheostat	8040
-	61	EM50		heating/air conditioning unit relay	8061
-	64	EM50		additional/autonomous heating control relay	8091
-	68	EM50		heater control panel lamp	3051
-	69	EM50		additional/autonomous heating control relay	8091
-	71	EM50		heating/air conditioning unit relay	8061

harness 60 P/C					
splice	wire no.	connection 1	instrument reference	connection 2	instrument reference
		E144 (46			

E144A	8	HAB)		E144A	
-	2	E144A		electric window/rear view mirror control panel on driver´s door	6036
-	34	E144A		electric window/rear view mirror control panel on driver´s door	6036
-	35	E144A		electric window/rear view mirror control panel on driver´s door	6036
-					
E190	36		6036	E190	
-	37	E190		driver´s side rear view mirror	6410
-	38	E190		Passenger's door mirror	6415
-					
EM45B	18	EM45A (46 HAB)		EM45B	
-	33	EM45B		electric window/rear view mirror control panel on driver´s door	6036
-	1	EM45B		electric window/rear view mirror control panel on driver´s door	6036
-	19	EM45B		driver´s door lock assembly	6202
-	14	EM45B		driver´s side rear view mirror	6410

harness 61 PARGB					
splice	wire no.	connection 1	instrument reference	connection 2	instrument reference
E300	5	built-in systems interface	BSI1	E300	
-	1	E300		number plate right-hand lamp	2633
-	36	E300		number plate lamp	2636
-					
EM60A	6	EM60 (71D AR/D)		EM60A	
-	2	EM60A		number plate right-hand lamp	2633
-	4	EM60A		number plate lamp	2636

harness 65 P/P					
splice	wire no.	connection 1	instrument reference	connection 2	instrument reference
E310	24	electric window/rear view mirror control panel on driver´s door	6036	E310	
-	10	E310		passenger´s electric window switch	6004
-	19	E310		front RH electric window unit + motor	6051
-					
E311	23	electric window/rear view mirror control panel on driver´s door	6036	E311	
-	13	E311		passenger´s electric window switch	6004
-	17	E311		front RH electric window unit + motor	6051
-					
EM45C	18	EM45A (46 HAB)		EM45C	
-	15	EM45C		Passenger's door mirror	6415
-	16	EM45C		passenger´s door lock assembly	6207

harness 71D AR/D					
splice	wire no.	connection 1	instrument reference	connection 2	instrument reference
E142A	78	E142 (46 HAB)		E142A	
-	18	E142A		Rear interior lamp	3020
-					
E320	34	central locking control unit	6235	E320	
-	35	E320		rear RH hinged door lock assembly	6218
-	36	E320		rear central pretensioner	6579
-					

E330	50	passenger compartment fuse box	BF00	E330	
-	47	E330		right-hand tail lamp	2635
-	49	E330		parking assistance rear speaker	7504
-					
EM60	22	earth	MC60	EM60	
-	2	EM60		left-hand tail lamp	2630
-	17	EM60		Rear interior lamp	3020
-	21	EM60		EM60A (61 PARGB)	
-	40	EM60		LH rear heated window	8118
-					
EM70	1	earth	MC70	EM70	
-	12	EM70		right-hand tail lamp	2635
-	23	EM70		additional stop lamps	2110
-	24	EM70		rear RH hinged door lock assembly	6218
-	32	EM70		RH sliding side door switch	6279
-	43	EM70		rear 12 volt socket	CP00
-	48	EM70		parking assistance ECU	7500
-	51	EM70		parking assistance rear speaker	7504
-	37	EM70		RH rear heated window	8119
-	32	EM70		EM70A (71 AR C)	

harness 71G AR/G					
splice	wire no.	connection 1	instrument reference	connection 2	instrument reference
EM61	20	earth	MC61	EM61	
-	19	EM61		suspension control unit	7715
-	27	EM61		suspension control unit	7715

harness 71 AR C					
splice	wire no.	connection 1	instrument reference	connection 2	instrument reference
E146A	22	E146 (46 HAB)		E146A	
-	16	E146A		RH sliding side door switch	6279
-	20	E146A		LH sliding side door switch	6278
-					
E360	23	central locking control unit	6235	E360	
-	11	E360		LH sliding side door switch	6278
-	15	E360		RH sliding side door switch	6279
-					
E361	24	built-in systems interface	BSI1	E361	
-	12	E361		LH sliding side door switch	6278
-	17	E361		RH sliding side door switch	6279
-					
E362	21	central locking control unit	6235	E362	
-	13	E362		LH sliding side door switch	6278
-	18	E362		RH sliding side door switch	6279
-					
EM70A	25	EM70 (71D AR/D)		EM70A	
-	14	EM70A		LH sliding side door switch	6278
-	19	EM70A		RH sliding side door switch	6279

harness 80 AR/SP					
splice	wire no.	connection 1	instrument reference	connection 2	instrument reference
E370	1	parking assistance ECU	7500	E370	
-	2	E370		outer LH rear proximity sensor	7510

-	3	E370		inner RH rear proximity sensor	7513
-	4	E370		outer RH rear proximity sensor	7512
-	5	E370		inner LH rear proximity sensor	7511
-					
E371	12	parking assistance ECU	7500	E371	
-	6	E371		outer RH rear proximity sensor	7512
-	7	E371		outer LH rear proximity sensor	7510
-	8	E371		inner LH rear proximity sensor	7511
-	14	E371		inner RH rear proximity sensor	7513

Vehicle

JUMPER

Data

New

Domain

Lighting - Signalling

Function

Marker Lamps

Function Diagram

Principle

Wiring

Installation

9C- 06/10/2013

SVG Viewer

Tools

History

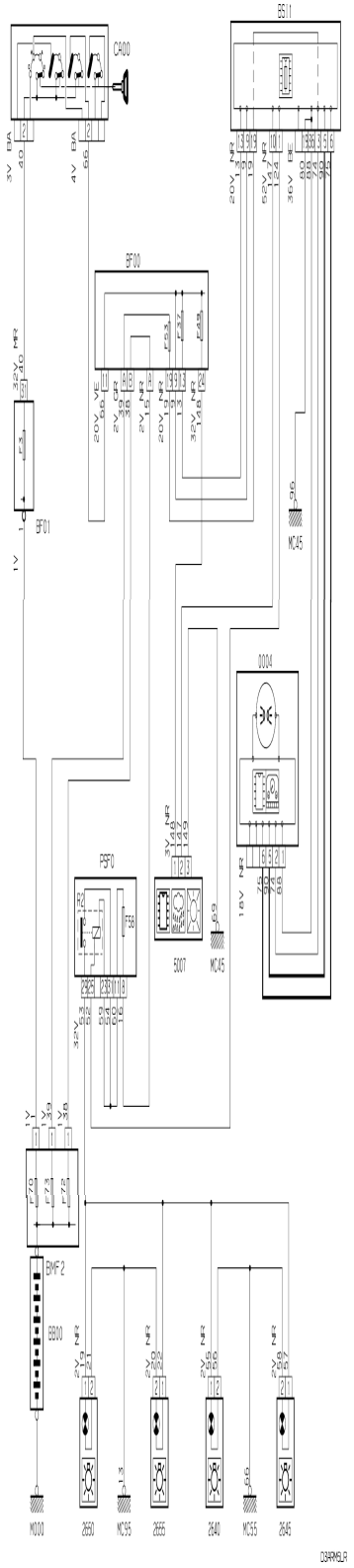
CA00
BS11
BF00
BF01
MC45
0004
PSF0
5007
MC45
BMF2
BB00
M000
2650
MC95
2665
2640
MC55
2645
D3ARM5LR

Vehicle

JUMPER

Data

New

Domain

Lighting - Signalling

Function

Marker Lamps

Function Diagram

Principle

Wiring

Installation

9C- 06/10/2013

SVG Viewer

Tools

History

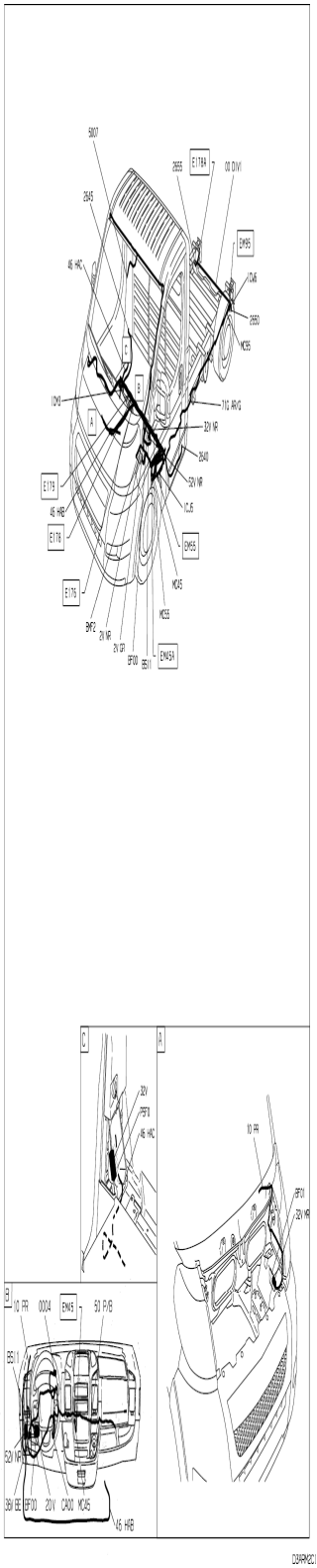
5007
2655
E178A
00 DIV1
2645
EM95
46 HAC
1CJ6
2650
MC95
C
B
A
10MJ
71G ARVG
32V NR
2640
52V NR
E179
1CJ5
46 HAB
E178
EM55
E176
MC45
MC55
BMF2
2V NR
2V GR
BF00
BS11
EM45A
C
A
32V
PSF0
46 HAC
10 PR
BF01
32V NR
B
10 PR
0004
EM45
50 F/B
BS11
52V NR
36V BE
BF00
20V
CA00
MC45
46 HAB

D3ARM2C1

Vehicle

JUMPER

Data

New

Domain

Lighting - Signalling

Function

Marker Lamps

Function Diagram

Principle

Wiring

Installation

9C- 06/10/2013

SVG Viewer

Tools

History

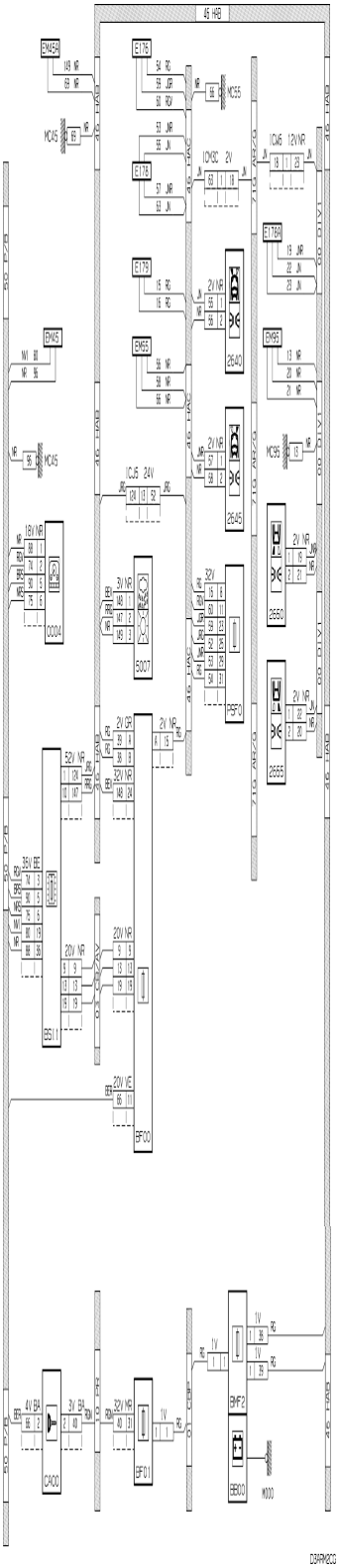

Vehicle

JUMPER

Data

New

Domain

Instruments And Controls

Function

Electrically Controlled Mirrors

Function Diagram

Principle

Wiring

Installation

9C- 06/10/2013

SVG Viewer

Tools

History

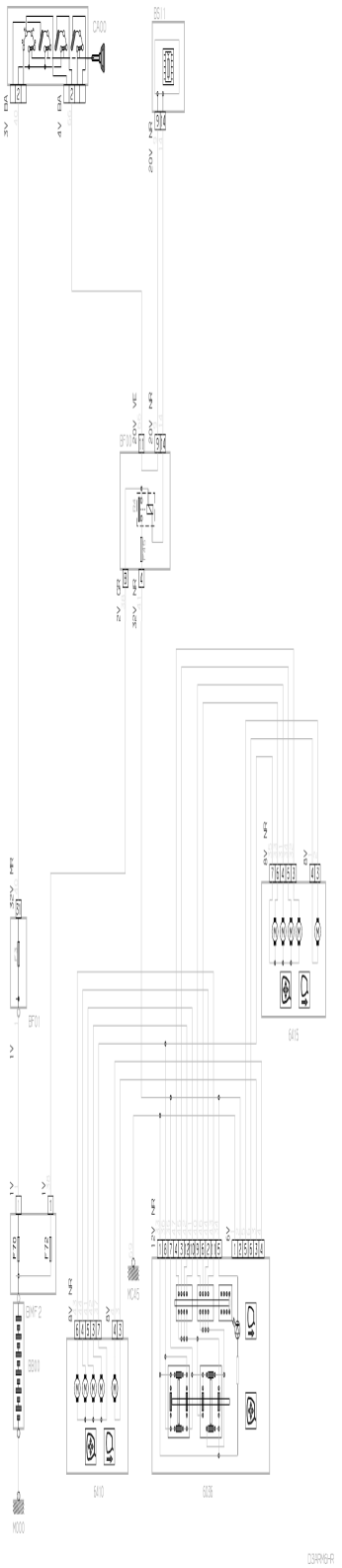

Vehicle

JUMPER

Data

New

Domain

General Points

Function

Multiplexed Network Interconnection

Function Diagram

Synopsis

9C- 06/10/2013

SVG Viewer

Tools

History

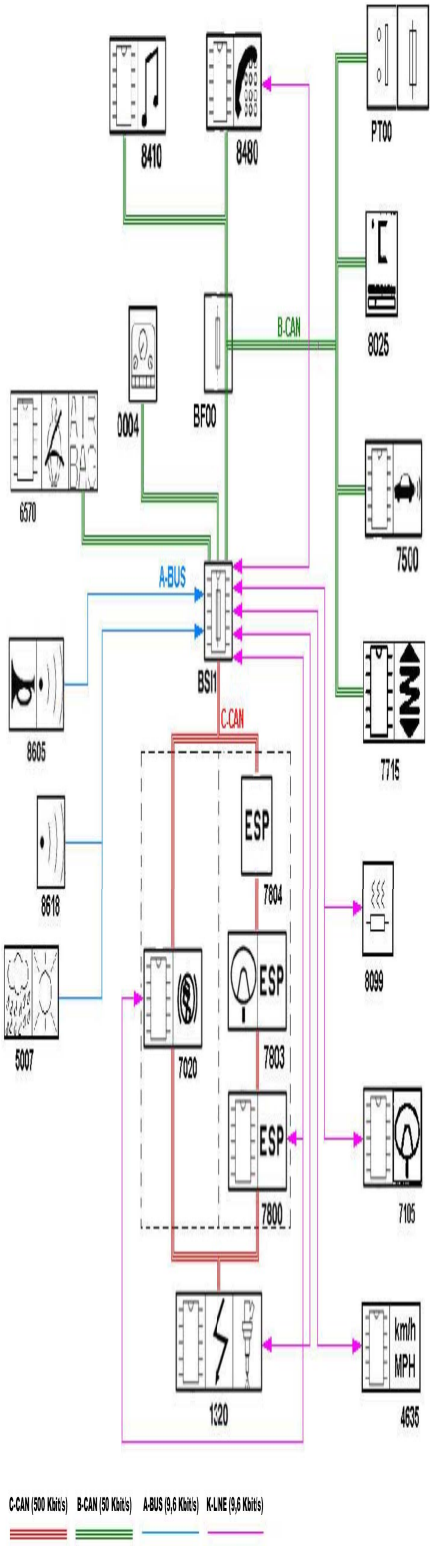
8410
8480
PT00
8025
B-CAN
0004
BF00
6570
7500
A-BUS
BSI
8605
C-CAN
7715
ESP
7804
8618
8099
5007
7020
ESP
7803
ESP
7800
7105
1320
kmh
MPH
4635
C-CAN (500 Kbit/s)
B-CAN (50 Kbit/s)
A-BUS (9,6 Kbit/s)
K-LINE (9,6 Kbit/s)

Vehicle

JUMPER

Data

New

Domain

Driving Assistance

Function

Parking Assistance Camera

Function Diagram

Principle

Wiring

Installation

9C- 06/10/2013

SVG Viewer

Tools

History

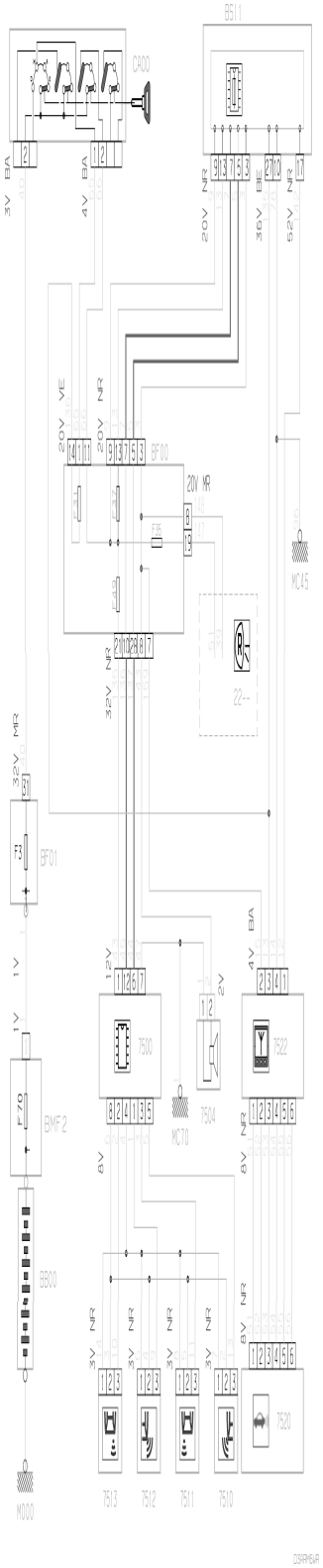
BS11
CA00
3V BA
4V BA
20V NR
35V BE
52V NR
20V VE
20V NR
BF00
20V MR
F35
MC45
22--
32V NR
32V MR
BF01
F3
1V
1V
F70
BMF2
BB00
12V
2V
4V BA
7500
7522
7504
MC70
8V
8V NR
3V NR
3V NR
3V NR
3V NR
8V NR
7520
7513
7512
7511
7510
M000
D3AR4SAR

Vehicle

JUMPER

Data

New

Domain

Driving Assistance

Function

Parking Assistance

Function Diagram

Principle

Wiring

Installation

9C- 06/10/2013

SVG Viewer

Tools

History

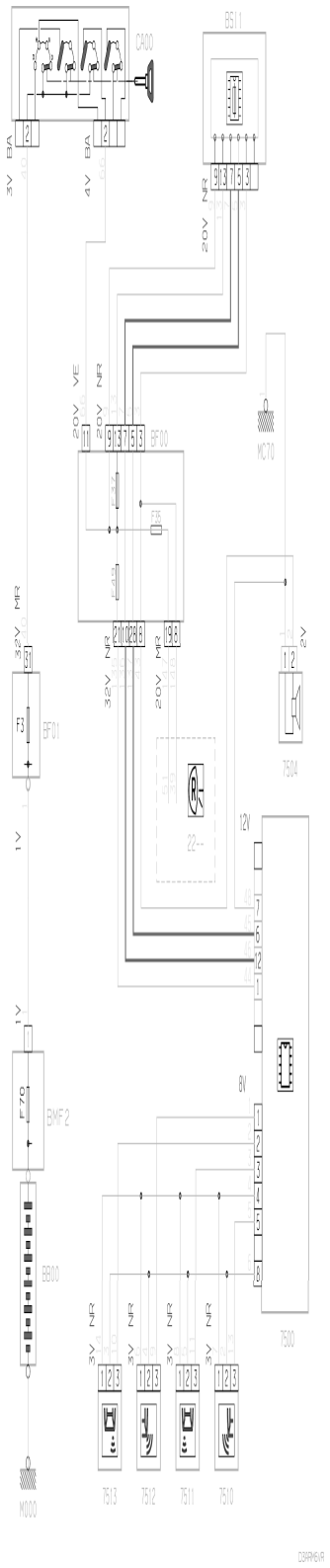
CA00
BS11
BF00
MC70
BF01
7504
22--
12V
8V
BMF2
BB00
7500
7513
7512
7511
7510
M000

Vehicle

JUMPER

Data

New

Domain

Lighting - Signalling

Function

Passenger
Compartment / Closed
Compartment Lighting

Function Diagram

Principle

Wiring

Installation

9C- 06/10/2013

SVG Viewer

Tools

History

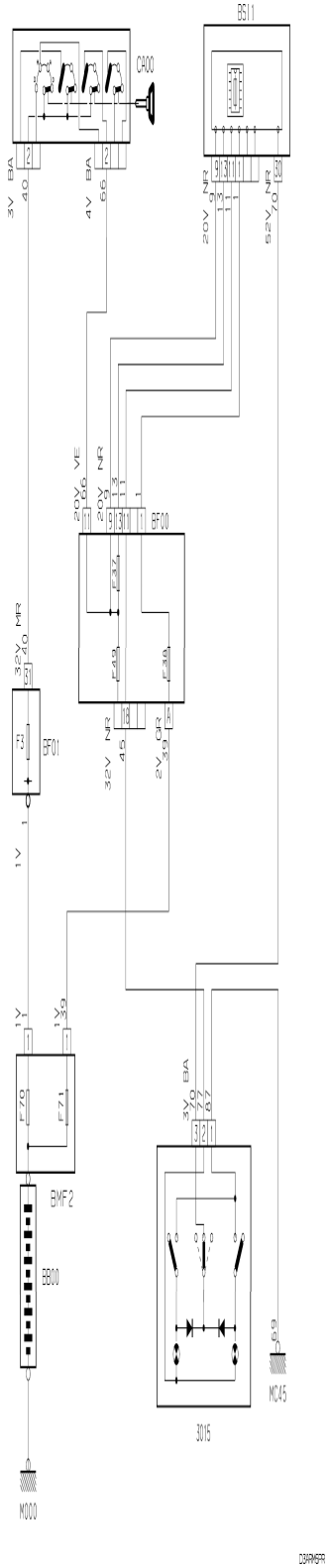
BSI1
C400
BF00
BF01
BMF2
BB00
3015
M000
MC45
F37
F38
F39
F70
F71
F72
F73
F74
F75
F76
F77
F78
F79
F80
F81
F82
F83
F84
F85
F86
F87
F88
F89
F90
F91
F92
F93
F94
F95
F96
F97
F98
F99
F100
F101
F102
F103
F104
F105
F106
F107
F108
F109
F110
F111
F112
F113
F114
F115
F116
F117
F118
F119
F120
F121
F122
F123
F124
F125
F126
F127
F128
F129
F130
F131
F132
F133
F134
F135
F136
F137
F138
F139
F140
F141
F142
F143
F144
F145
F146
F147
F148
F149
F150
F151
F152
F153
F154
F155
F156
F157
F158
F159
F160
F161
F162
F163
F164
F165
F166
F167
F168
F169
F170
F171
F172
F173
F174
F175
F176
F177
F178
F179
F180
F181
F182
F183
F184
F185
F186
F187
F188
F189
F190
F191
F192
F193
F194
F195
F196
F197
F198
F199
F200
F201
F202
F203
F204
F205
F206
F207
F208
F209
F210
F211
F212
F213
F214
F215
F216
F217
F218
F219
F220
F221
F222
F223
F224
F225
F226
F227
F228
F229
F230
F231
F232
F233
F234
F235
F236
F237
F238
F239
F240
F241
F242
F243
F244
F245
F246
F247
F248
F249
F250
F251
F252
F253
F254
F255
F256
F257
F258
F259
F260
F261
F262
F263
F264
F265
F266
F267
F268
F269
F270
F271
F272
F273
F274
F275
F276
F277
F278
F279
F280
F281
F282
F283
F284
F285
F286
F287
F288
F289
F290
F291
F292
F293
F294
F295
F296
F297
F298
F299
F300
F301
F302
F303
F304
F305
F306
F307
F308
F309
F310
F311
F312
F313
F314
F315
F316
F317
F318
F319
F320
F321
F322
F323
F324
F325
F326
F327
F328
F329
F330
F331
F332
F333
F334
F335
F336
F337
F338
F339
F340
F341
F342
F343
F344
F345
F346
F347
F348
F349
F350
F351
F352
F353
F354
F355
F356
F357
F358
F359
F360
F361
F362
F363
F364
F365
F366
F367
F368
F369
F370
F371
F372
F373
F374
F375
F376
F377
F378
F379
F380
F381
F382
F383
F384
F385
F386
F387
F388
F389
F390
F391
F392
F393
F394
F395
F396
F397
F398
F399
F400
F401
F402
F403
F404
F405
F406
F407
F408
F409
F410
F411
F412
F413
F414
F415
F416
F417
F418
F419
F420
F421
F422
F423
F424
F425
F426
F427
F428
F429
F430
F431
F432
F433
F434
F435
F436
F437
F438
F439
F440
F441
F442
F443
F444
F445
F446
F447
F448
F449
F450
F451
F452
F453
F454
F455
F456
F457
F458
F459
F460
F461
F462
F463
F464
F465
F466
F467
F468
F469
F470
F471
F472
F473
F474
F475
F476
F477
F478
F479
F480
F481
F482
F483
F484
F485
F486
F487
F488
F489
F490
F491
F492
F493
F494
F495
F496
F497
F498
F499
F500
F501
F502
F503
F504
F505
F506
F507
F508
F509
F510
F511
F512
F513
F514
F515
F516
F517
F518
F519
F520
F521
F522
F523
F524
F525
F526
F527
F528
F529
F530
F531
F532
F533
F534
F535
F536
F537
F538
F539
F540
F541
F542
F543
F544
F545
F546
F547
F548
F549
F550
F551
F552
F553
F554
F555
F556
F557
F558
F559
F560
F561
F562
F563
F564
F565
F566
F567
F568
F569
F570
F571
F572
F573
F574
F575
F576
F577
F578
F579
F580
F581
F582
F583
F584
F585
F586
F587
F588
F589
F590
F591
F592
F593
F594
F595
F596
F597
F598
F599
F600
F601
F602
F603
F604
F605
F606
F607
F608
F609
F610
F611
F612
F613
F614
F615
F616
F617
F618
F619
F620
F621
F622
F623
F624
F625
F626
F627
F628
F629
F630
F631
F632
F633
F634
F635
F636
F637
F638
F639
F640
F641
F642
F643
F644
F645
F646
F647
F648
F649
F650
F651
F652
F653
F654
F655
F656
F657
F658
F659
F660
F661
F662
F663
F664
F665
F666
F667
F668
F669
F670
F671
F672
F673
F674
F675
F676
F677
F678
F679
F680
F681
F682
F683
F684
F685
F686
F687
F688
F689
F690
F691
F692
F693
F694
F695
F696
F697
F698
F699
F700
F701
F702
F703
F704
F705
F706
F707
F708
F709
F710
F711
F712
F713
F714
F715
F716
F717
F718
F719
F720
F721
F722
F723
F724
F725
F726
F727
F728
F729
F730
F731
F732
F733
F734
F735
F736
F737
F738
F739
F740
F741
F742
F743
F744
F745
F746
F747
F748
F749
F750
F751
F752
F753
F754
F755
F756
F757
F758
F759
F760
F761
F762
F763
F764
F765
F766
F767
F768
F769
F770
F771
F772
F773
F774
F775
F776
F777
F778
F779
F780
F781
F782
F783
F784
F785
F786
F787
F788
F789
F790
F791
F792
F793
F794
F795
F796
F797
F798
F799
F800
F801
F802
F803
F804
F805
F806
F807
F808
F809
F810
F811
F812
F813
F814
F815
F816
F817
F818
F819
F820
F821
F822
F823
F824
F825
F826
F827
F828
F829
F830
F831
F832
F833
F834
F835
F836
F837
F838
F839
F840
F841
F842
F843
F844
F845
F846
F847
F848
F849
F850
F851
F852
F853
F854
F855
F856
F857
F858
F859
F860
F861
F862
F863
F864
F865
F866
F867
F868
F869
F870
F871
F872
F873
F874
F875
F876
F877
F878
F879
F880
F881
F882
F883
F884
F885
F886
F887
F888
F889
F890
F891
F892
F893
F894
F895
F896
F897
F898
F899
F900
F901
F902
F903
F904
F905
F906
F907
F908
F909
F910
F911
F912
F913
F914
F915
F916
F917
F918
F919
F920
F921
F922
F923
F924
F925
F926
F927
F928
F929
F930
F931
F932
F933
F934
F935
F936
F937
F938
F939
F940
F941
F942
F943
F944
F945
F946
F947
F948
F949
F950
F951
F952
F953
F954
F955
F956
F957
F958
F959
F960
F961
F962
F963
F964
F965
F966
F967
F968
F969
F970
F971
F972
F973
F974
F975
F976
F977
F978
F979
F980
F981
F982
F983
F984
F985
F986
F987
F988
F989
F990
F991
F992
F993
F994
F995
F996
F997
F998
F999
F1000

Vehicle

JUMPER

Data

New

Domain

Lighting - Signalling

Function

Passenger
Compartment / Closed
Compartment Lighting

Function Diagram

Principle

Wiring

Installation

9C- 06/10/2013

SVG Viewer

Tools

History

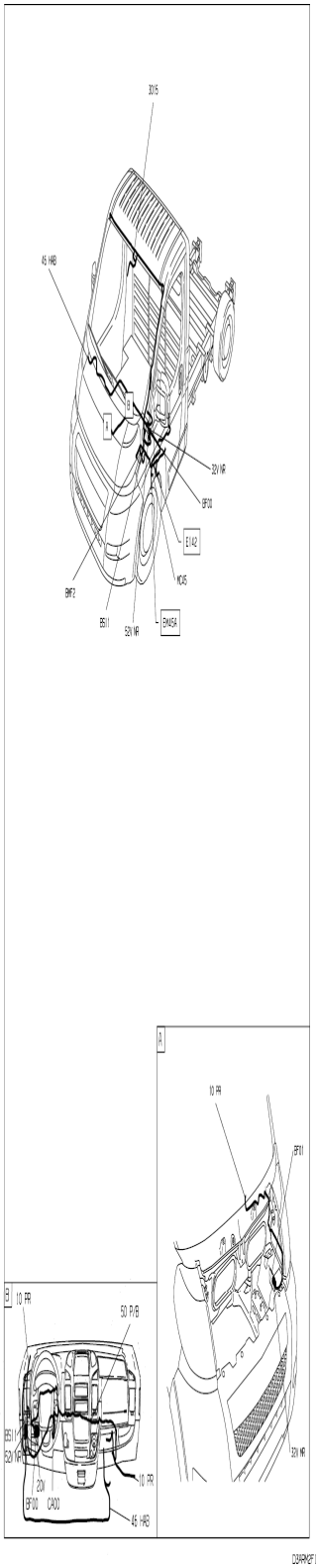
30/5
45 HAB
32V NR
BF00
E142
VCA5
BMF2
BS11
52V NR
EMA5A
A
10 PR
BF01
32V NR
B
10 PR
50 PVB
BS11
52V NR
20V
BF00
CA00
10 PR
45 HAB

D3ARN2F1

Vehicle

JUMPER

Data

New

Domain

Lighting - Signalling

Function

Passenger
Compartment / Closed
Compartment Lighting

Function Diagram

Principle

Wiring

Installation

9C- 06/10/2013

SVG Viewer

Tools

History

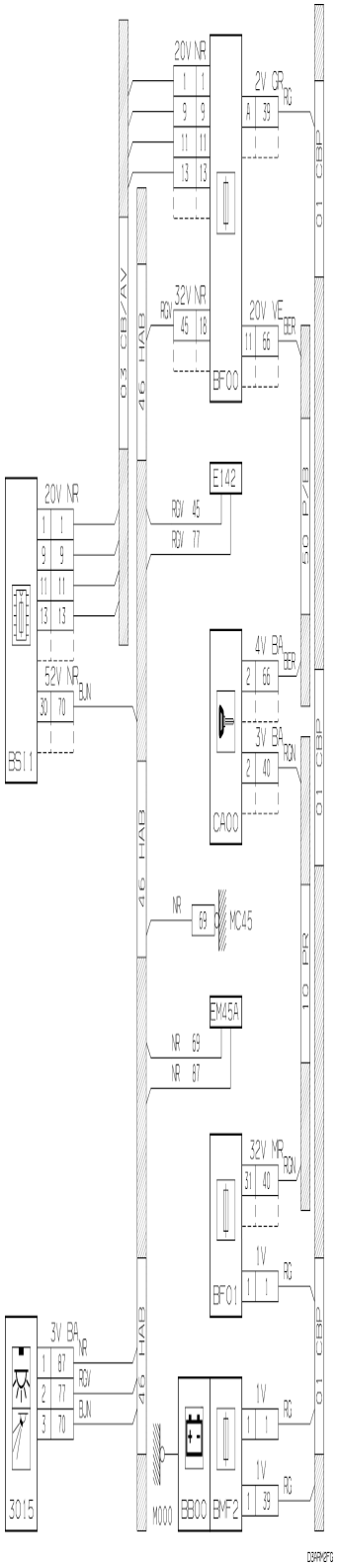
20V NR
2V GR RG
32V NR RGV
20V VE BER
BF00
E142
RGV 45
RGV 77
4V BA BER
3V BA RGV
CA00
NR
MC45
EM45A
NR 69
NR 87
32V NR RGV
1V RG
BF01
3V BA NR
RGV
BJN
52V NR BJN
BS11
301.5
M000
BB00
BMF2
03 CB/AV
46 HAB
01 CBP
50 P/B
10 PR
D3RKFG

Vehicle

JUMPER
Data
New

Domain

General Points

Function

Allocation Of BF00 Fuses

Function Diagram

General

9C- 06/10/2013

SVG Viewer
Tools
History

D3B0IAP0	PASSENGER COMPARTMENT FUSE BOX - ON THE DRIVER´S SIDE (BF00)

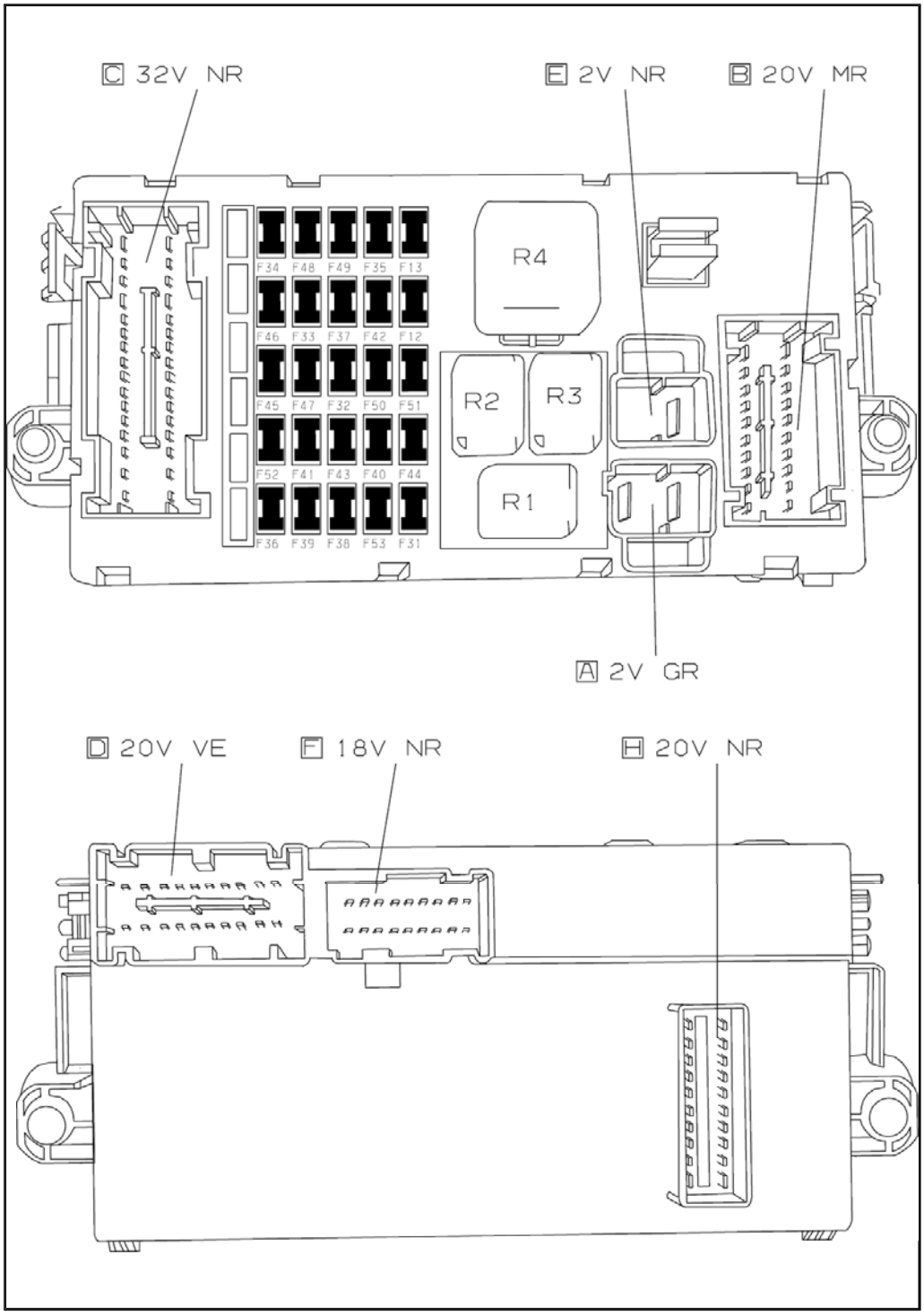

fig. d3ap270p

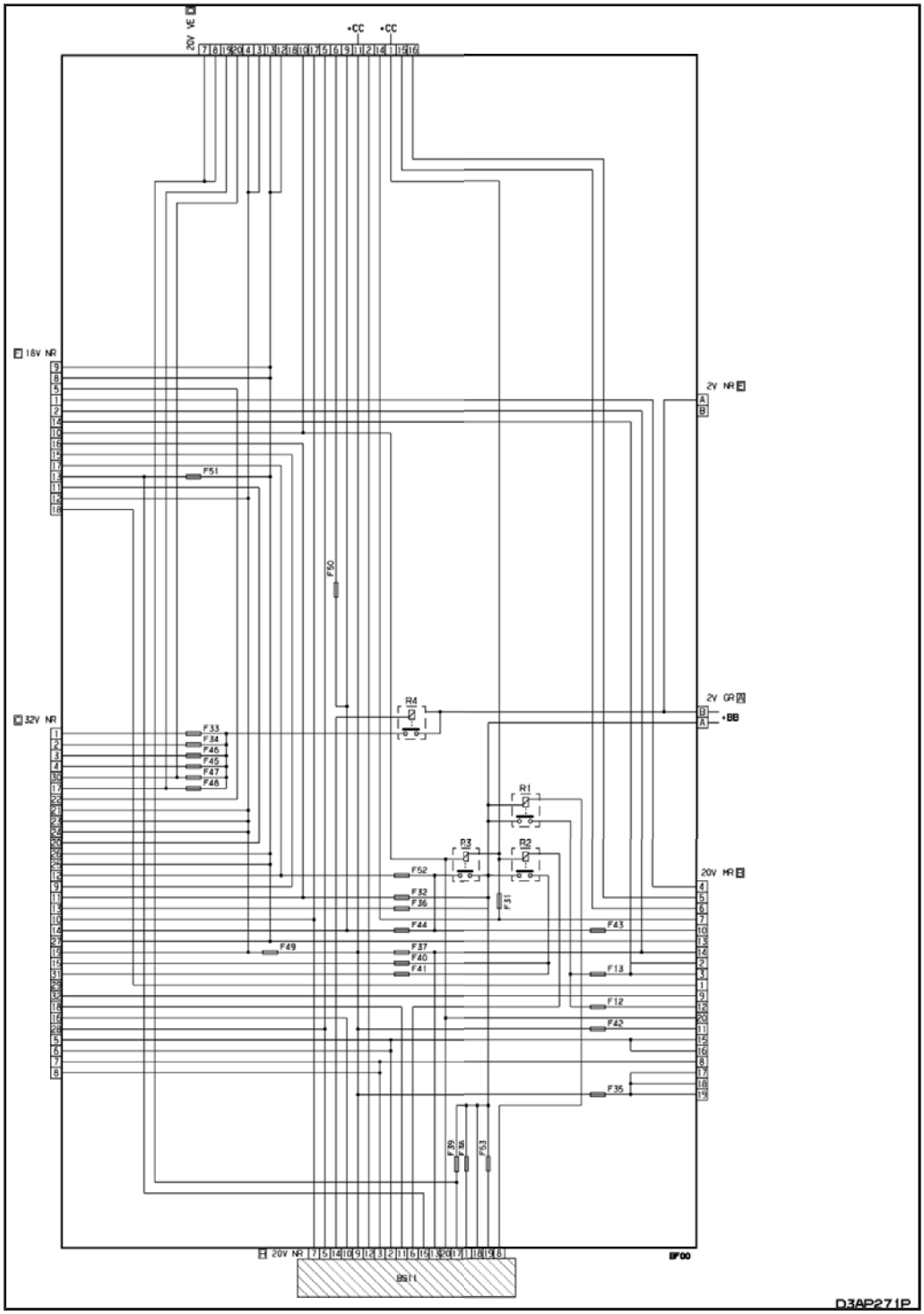

fig. d3ap271p

25 fuse box (BF00)		
fuses	A	matching
F12	7,5A	RH dipped beam - rear RH sidelamp
F13		LH dipped beam - headlamp height corrector
F31	7,5A	(+KK) relay box supply - built-in systems interface (R3 - R5) - parking assistance video screen
F32	10A	interior lighting (minibus)

F33	15A	rear 12 volt socket
F34	free	
F35	7,5A	cruise control - reversing lamps - water in fuel sensor - air flowmeter
F36	20A	central locking control unit
F37	10A	stoplamp switch - Control panel - additional stop lamps
F38		internal relays (BSI1)
F39		audio system - diagnostic socket (EOBD) - Radiotelephone transceiver - alarm siren - additional heating control panel - heater panel - air conditioning switch - tachograph
F40	15A	rear LH heated screen - heated driver´s rear view mirror
F41		rear RH heated screen - heated passenger´s rear view mirror
F42	7,5A	anti-lock brake control unit - ESP flywheel angle sensor - ABS accelerometer sensor - stoplamp switch
F43	30A	(+KK) windscreen wiper motor
F44	20A	(+KK) front cigar lighter - rear 12 volt socket
F45	7,5A	electric window/rear view mirror control panel on driver´s door - passenger´s electric window switch
F46	free	
F47	20A	driver´s electric window motor
F48		passenger´s electric window motor
F49	7,5A	parking assistance ECU - rain/sunlight sensor - multifunction switch block - LH multifunction switch block - Radiotelephone transceiver - driver´s electric window motor - heated seats - parking assistance video screen
F50	7,5A	air bag and pre-tensioners control unit
F51		electric power steering ECU - built-in systems interface - tachograph
F52		(+KK) relay box supply - passenger compartment fusebox panel
F53	7,5A	Control panel - rear fog lamps

(+KK) : ignition off +

location of relays in passenger compartment (BF00)	
reference	matching
R1	dipped beam relay
R2	heated rear screen relay
R3	1 services relay (+KK)
R4	2 services relay

Vehicle

JUMPER

Data

New

Domain

Driving Assistance

Function

Power Steering

Function Diagram

Principle

Synopsis

Wiring

Installation

9C- 06/10/2013

SVG Viewer

Tools

History

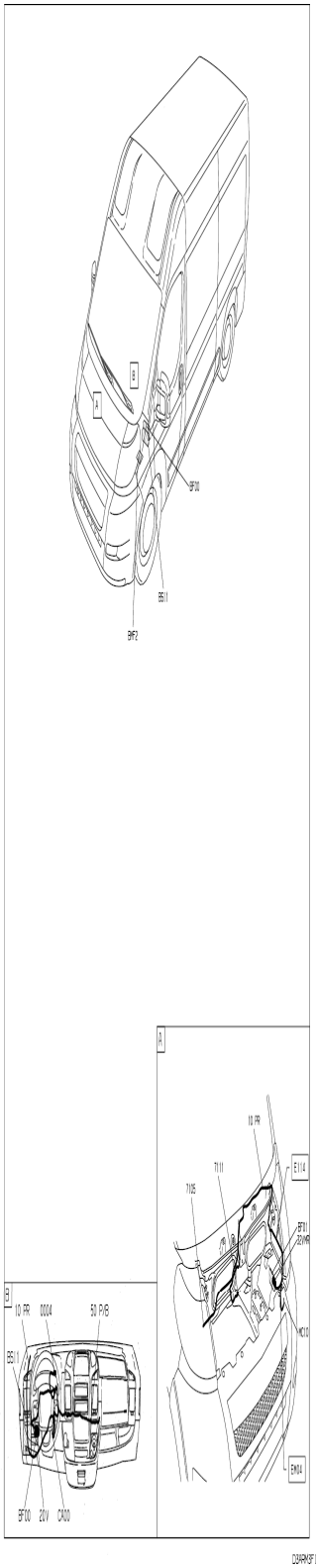
B
A
BF00
BS11
BMF2
10 PR
7111
7105
E114
BF01
20VMR
MC10
BM04
10 PR
0004
50 PVB
BS11
BF00
20V
CA00

D3PARK3F1

Vehicle

JUMPER

Data

New

Domain

Driving Assistance

Function

Power Steering

Function Diagram

Principle

Synopsis

Wiring

Installation

9C- 06/10/2013

SVG Viewer

Tools

History

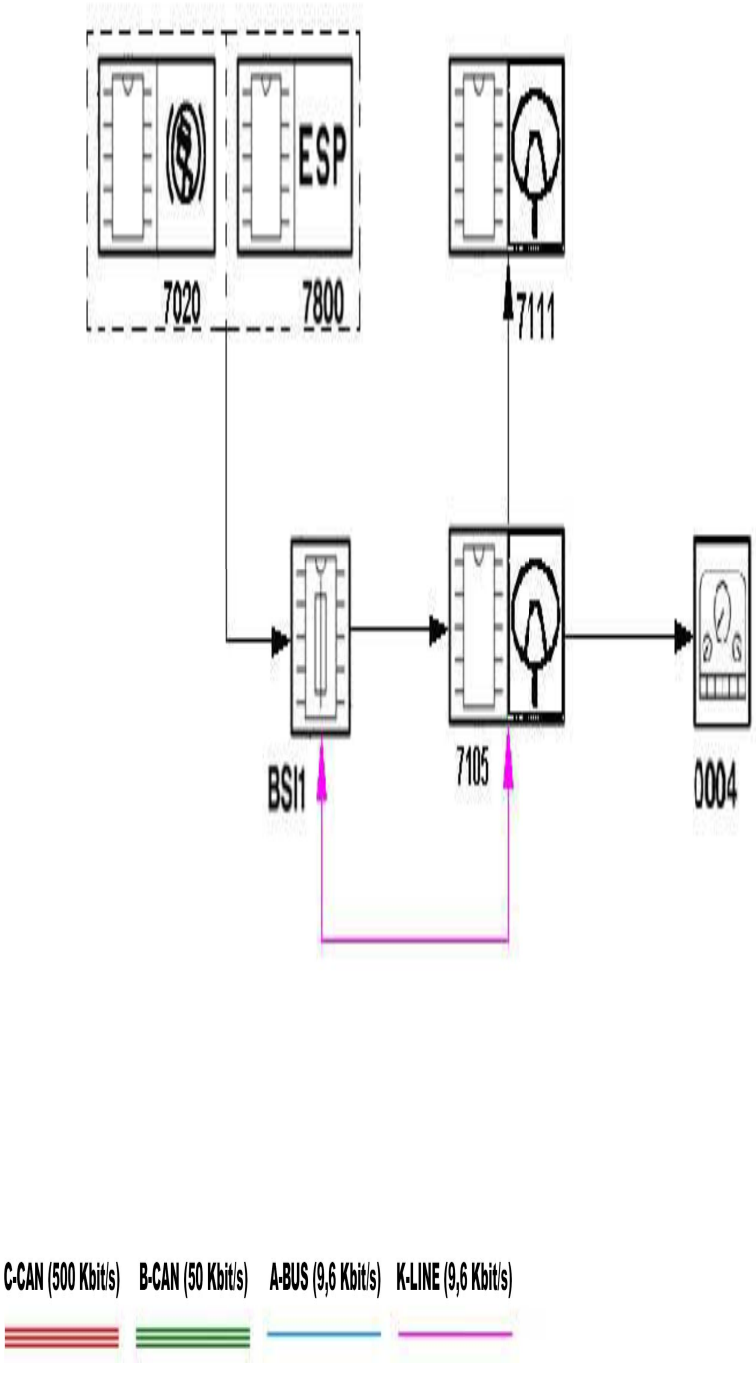
ESP
7020
7800
7111
BSI1
7105
0004
C-CAN (500 Kbit/s)
B-CAN (50 Kbit/s)
A-BUS (9,6 Kbit/s)
K-LINE (9,6 Kbit/s)

Vehicle

JUMPER

Data

New

Domain

Driving Assistance

Function

Power Steering

Function Diagram

Principle

Synopsis

Wiring

Installation

9C- 06/10/2013

SVG Viewer

Tools

History

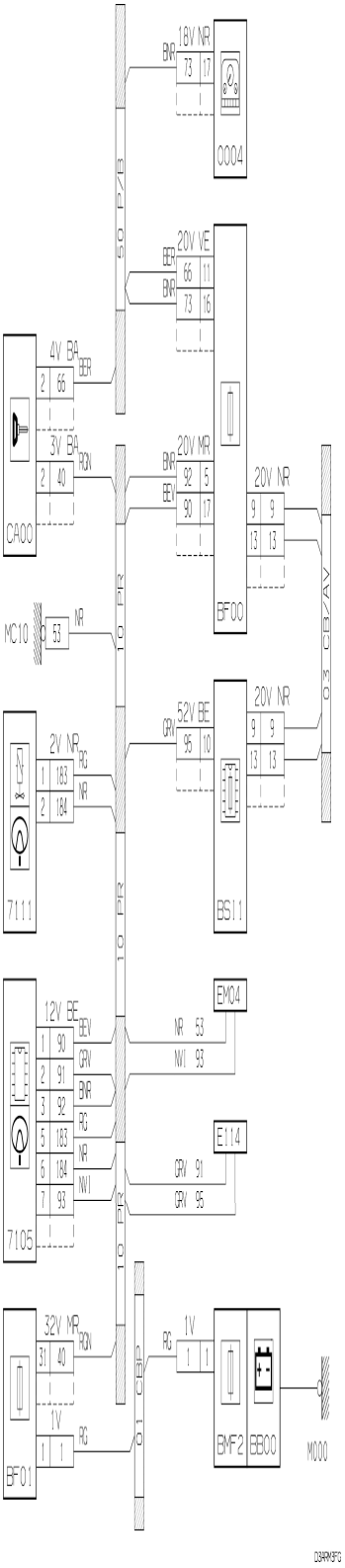
18V NR
BNR
73 17
0004
20V VE
BER
BNR
66 11
73 16
60 FB
4V BA
BER
2 66
3V BA
RGN
2 40
CA00
20V MR
BNR
BEV
92 5
90 17
BF00
20V NR
9 9
13 13
03 CB/AV
MC10
NR
53
10 FR
52V BE
GRV
95 10
2V NR
RG
NR
1 183
2 184
7111
BS11
12V BE
BEV
GRV
BNR
RG
NR
NVI
1 90
2 91
3 92
5 183
6 184
7 93
7105
EM04
NR 53
NVI 93
E114
GRV 91
GRV 95
32V NR
RGN
31 40
1V
RG
1 1
BF01
01 CEAP
BMF2
BB00
M000

Vehicle

JUMPER

Data

New

Domain

Driving Assistance

Function

Power Steering

Function Diagram

Principle

Wiring

Installation

9C- 06/10/2013

SVG Viewer

Tools

History

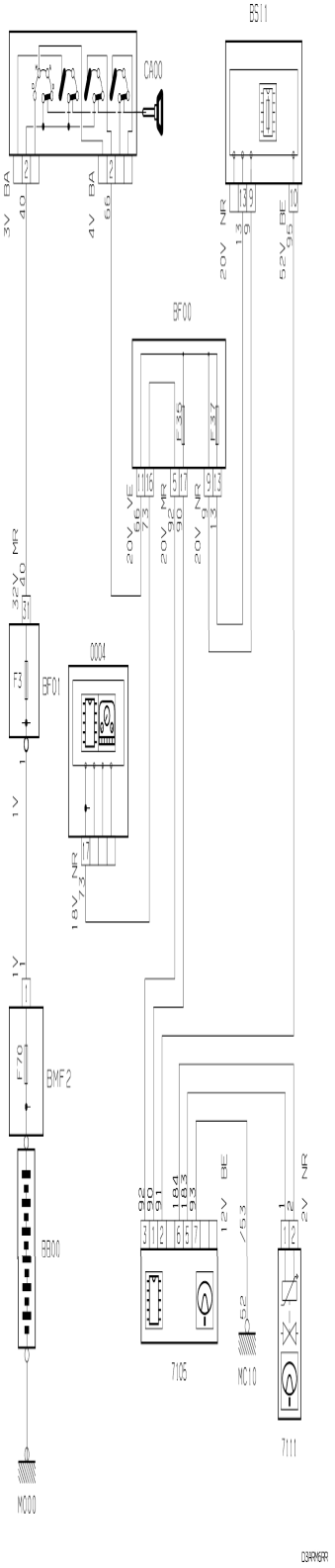
BS11
CA00
3V BA
4V BA
20V NR
52V BE
BF00
F35
F37
20V VE
20V MR
20V NR
32V MR
F3
BF01
0004
1V
18V NR
F70
BMF2
BB00
12V BE
2V NR
7105
MC10
7111
M000

Vehicle

JUMPER

Data

New

Domain

Power Unit

Function

Particle Filter

Function Diagram

Principle

Wiring

Installation

9C- 06/10/2013

SVG Viewer

Tools

History

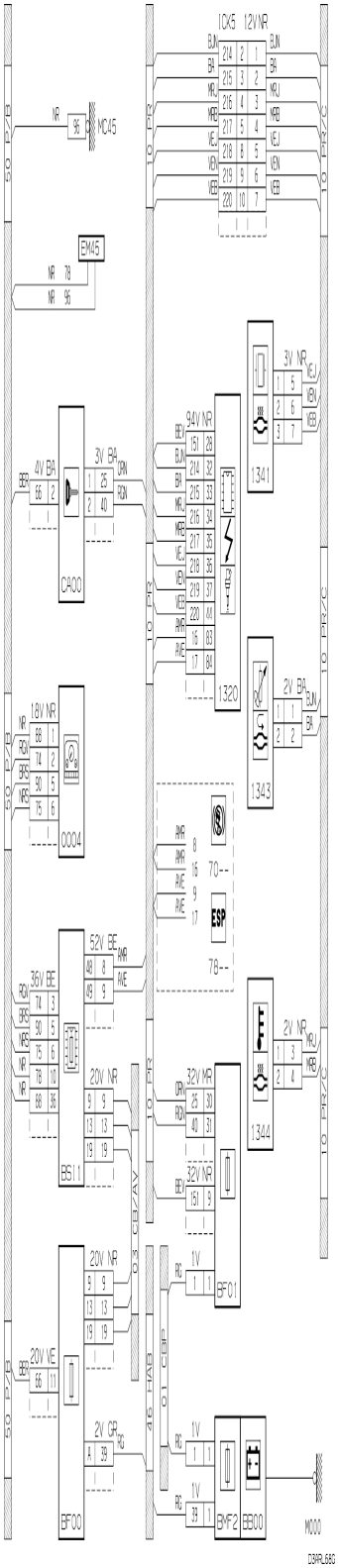
1CK5 12VNR
MC45
EM45
CA00
CO04
BS11
BF00
BF01
BMF2
BB00
1341
1320
1343
1344
M000
D3RL66G

Vehicle

JUMPER

Data

New

Domain

Power Unit

Function

Particle Filter

Function Diagram

Principle

Wiring

Installation

9C- 06/10/2013

SVG Viewer

Tools

History

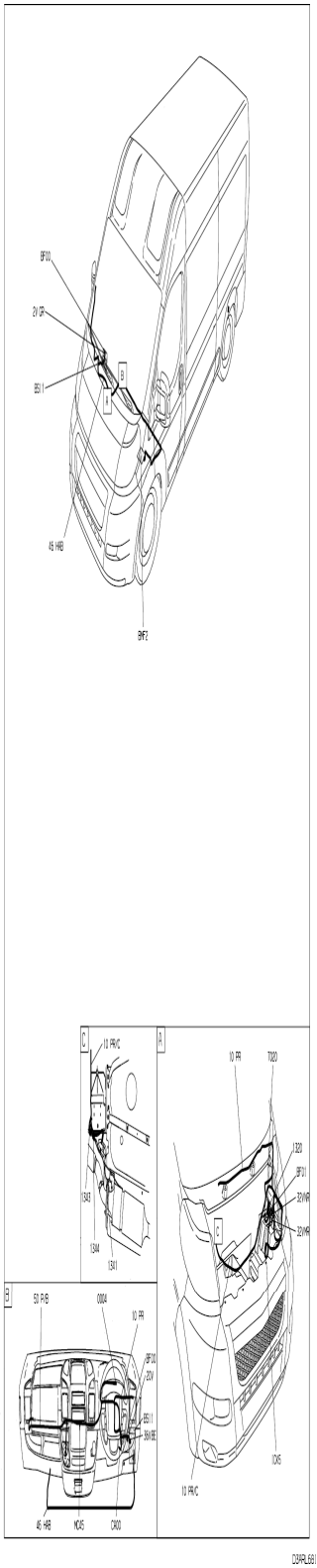
BF00
2V GR
BS11
45 HRB
BHF2
10 PRVC
1343
1344
1341
10 PR
7020
1320
BF01
32VHR
32VHR
1CK5
10 PRVC
50 PVB
0004
10 PR
BF00
20V
BS11
35VBE
45 HRB
MCA5
CA00

D3PRL661

vehicle : RELAY III		OPR : 12937717	
domain	protections and doors	function	seat belts / air bags
component			

principle

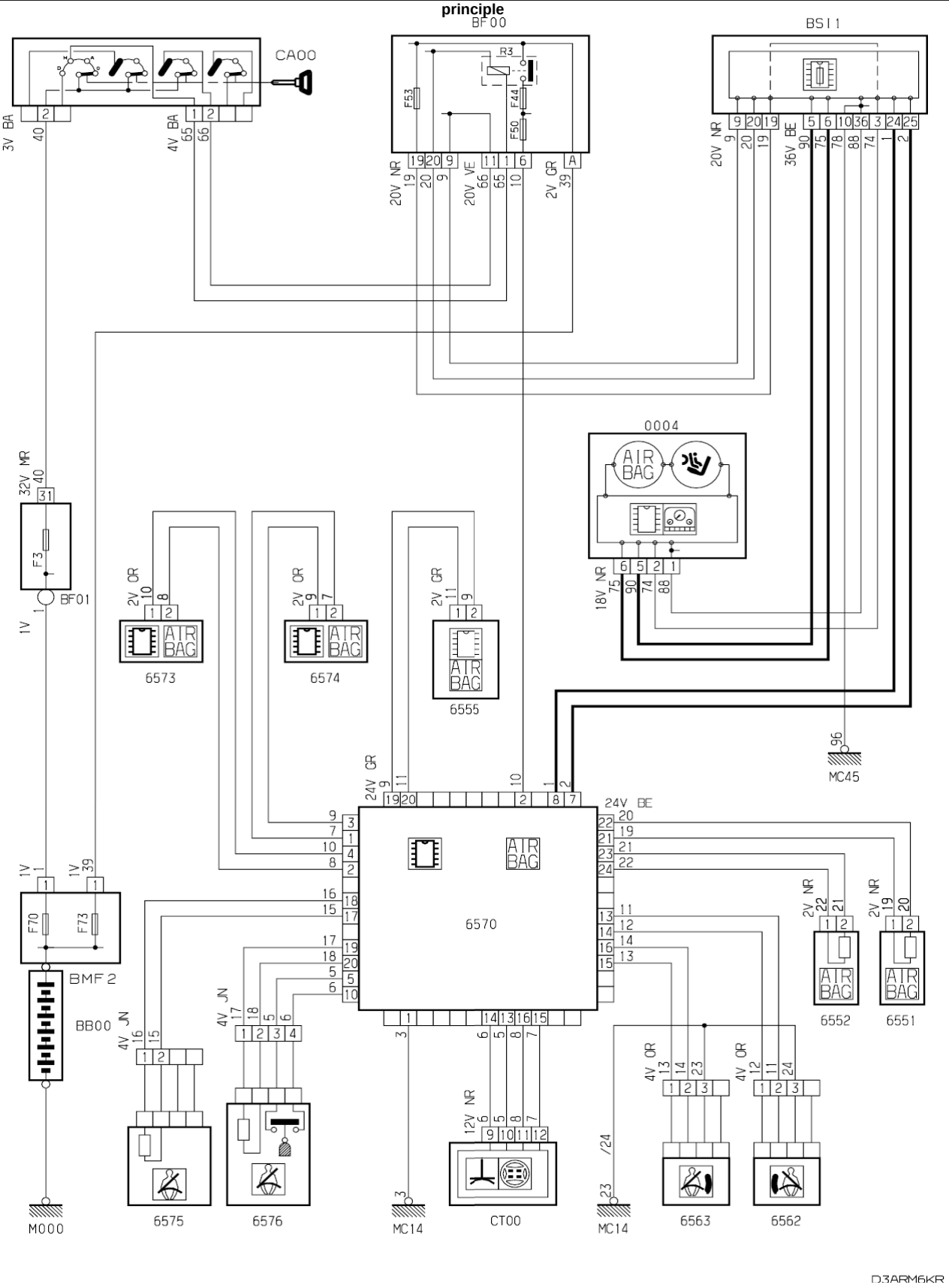

D3ARM6KR

wiring

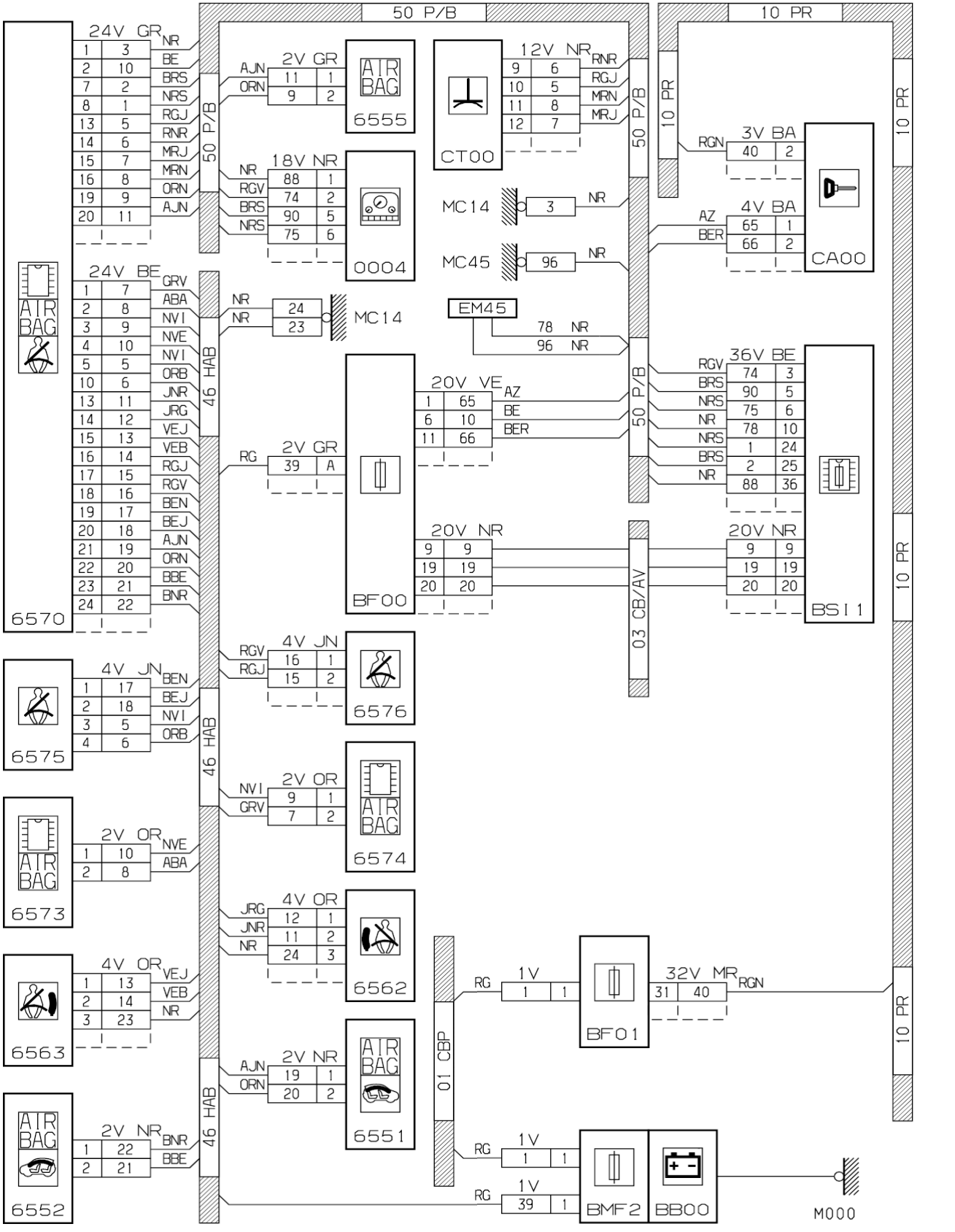
50 P/B
10 PR
24V GR
NR
BE
BRS
NRS
RGJ
RNR
MRJ
MRN
ORN
AJN
2V GR
AJN
ORN
AIR BAG
6555
12V NR
RNR
RGJ
MRN
MRJ
CT00
18V NR
NR
RGV
BRS
NRS
0004
MC14
MC45
3V BA
RGN
4V BA
AZ
BER
CA00
24V BE
GRV
ABA
NVI
NVE
NVI
ORB
JNR
JRG
VEJ
VEB
RGJ
RGV
BEN
BEJ
AJN
ORN
BBE
BNR
46 HAB
EM45
78 NR
96 NR
36V BE
20V VE
AZ
BE
BER
2V GR
RG
BF00
20V NR
03 CB/AV
BSI1
6570
4V JN
BEN
BEJ
NVI
ORB
6575
4V JN
RGV
RGJ
6576
2V OR
NVI
GRV
6574
2V OR
NVE
ABA
6573
4V OR
JRG
JNR
NR
6562
4V OR
VEJ
VEB
NR
6563
2V NR
AJN
ORN
6551
2V NR
BNR
BBE
6552
01 CBP
1V
BF01
32V MR
RGN
BMF2
BB00
M000
D3AR

null

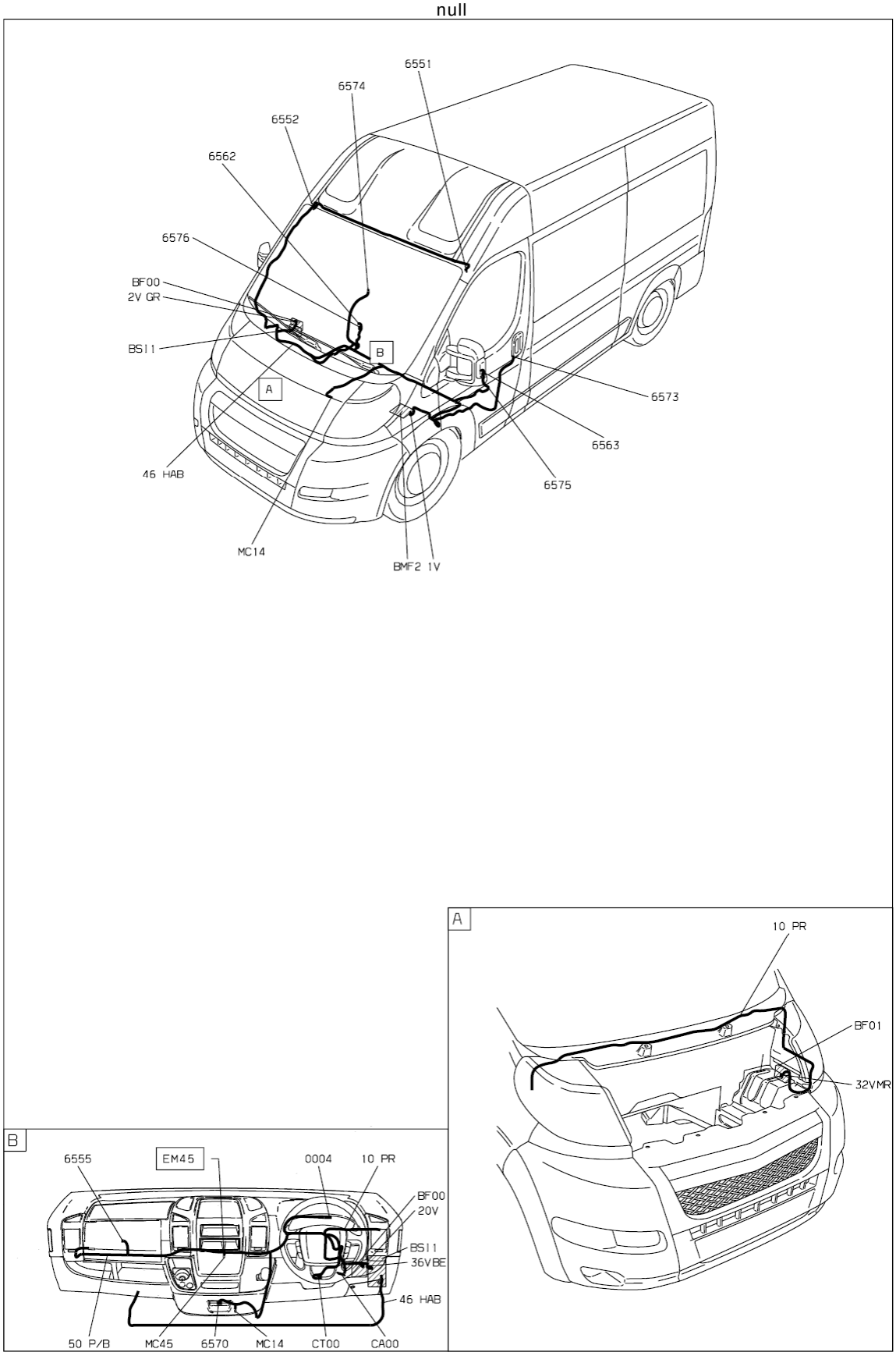

D3ARM6K1

property of PSA Peugeot Citroën

23/12/2015

vehicle : RELAY III		OPR : 12937717	
domain	washing and wiping	function	screen wipe/wash
component			

principle

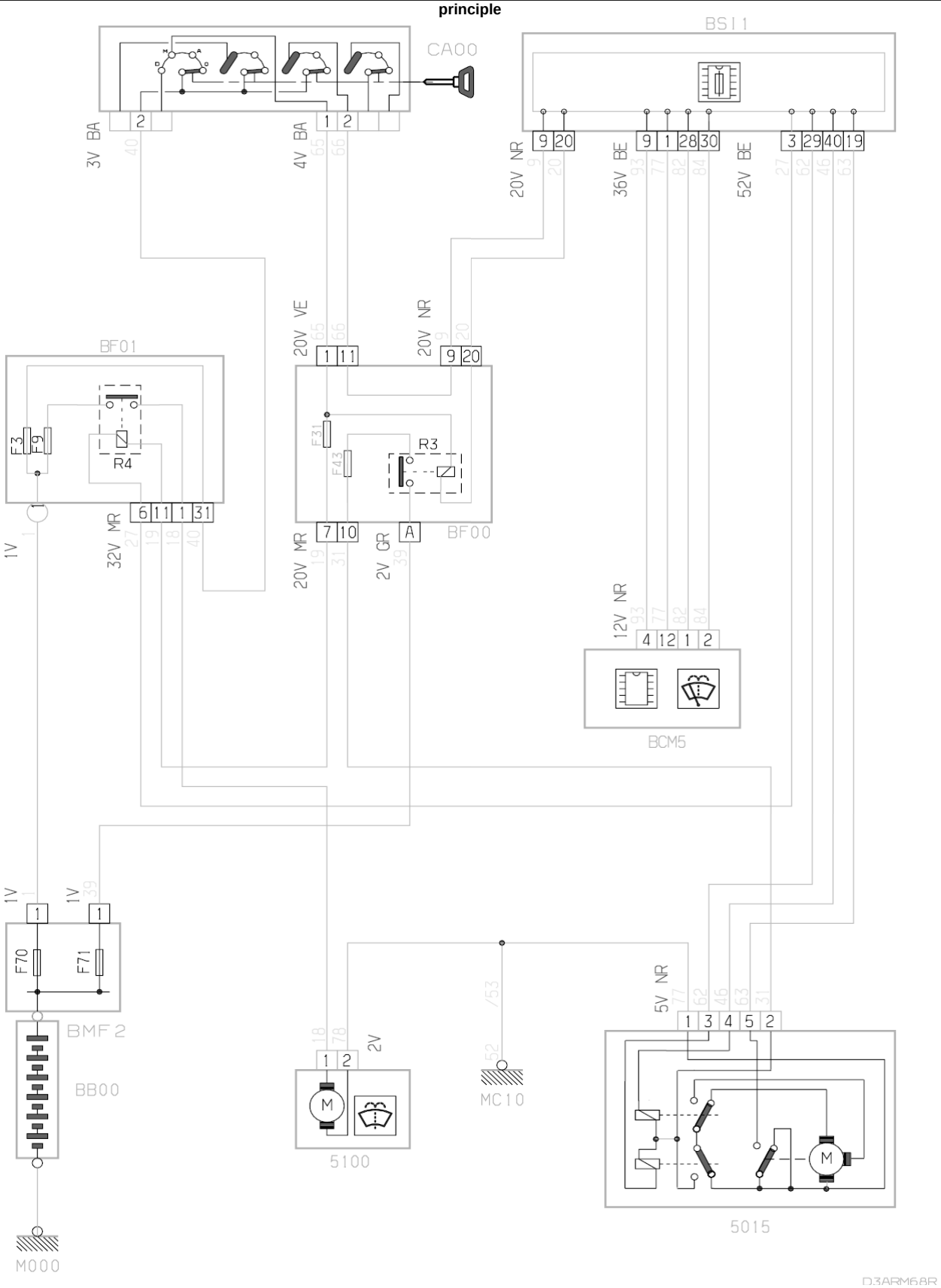

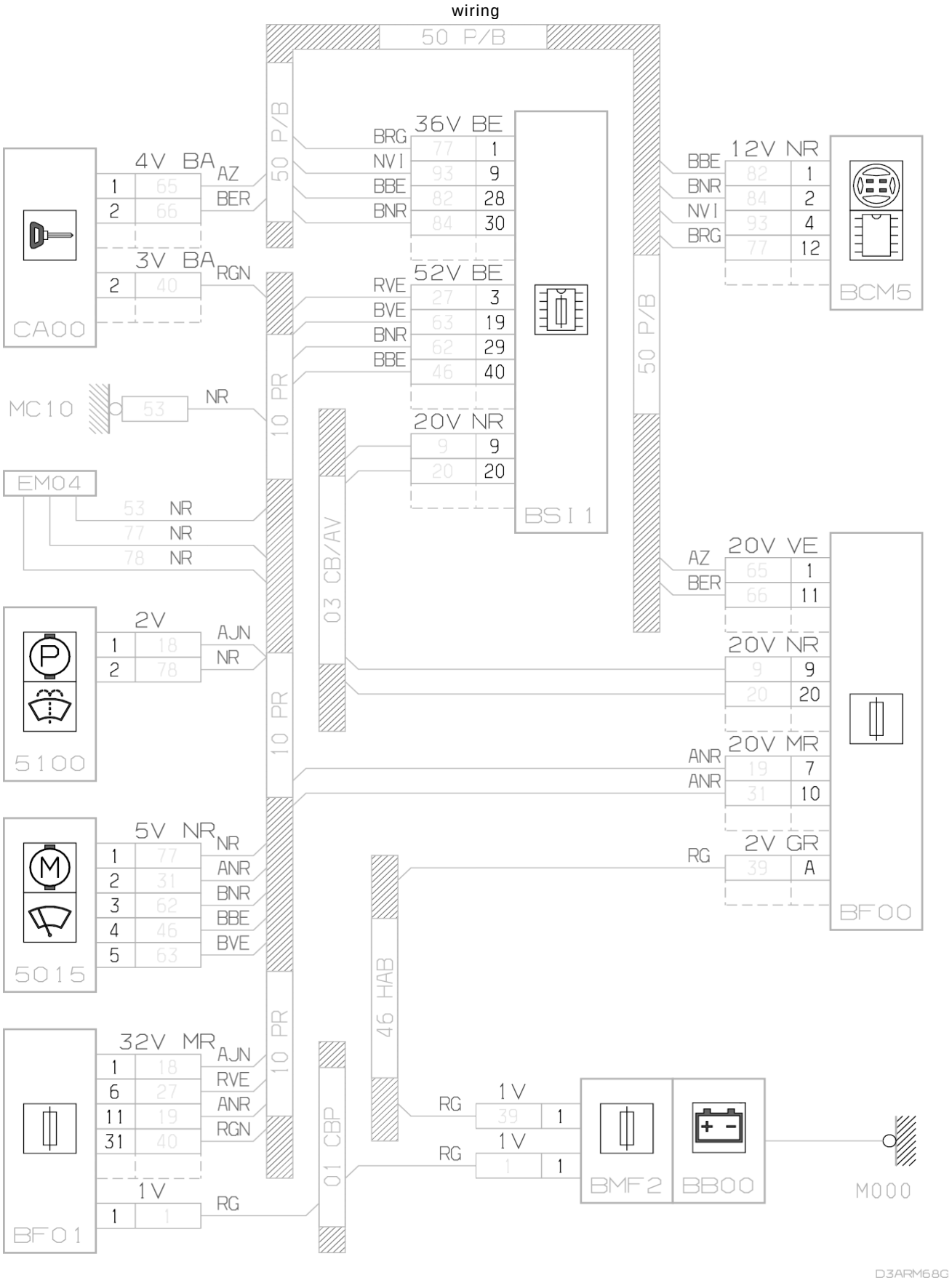
wiring
50 P/B
50 P/B
50 P/B
36V BE
BRG 77 1
NVI 93 9
BBE 82 28
BNR 84 30
52V BE
RVE 27 3
BVE 63 19
BNR 62 29
BBE 46 40
20V NR
9 9
20 20
BSI1
12V NR
BBE 82 1
BNR 84 2
NVI 93 4
BRG 77 12
BCM5
4V BA
AZ 1 65
BER 2 66
3V BA
RGN 2 40
CA00
MC10
53 NR
10 PR
EM04
53 NR
77 NR
78 NR
03 CB/AV
20V VE
AZ 65 1
BER 66 11
20V NR
9 9
20 20
20V MR
ANR 19 7
ANR 31 10
2V GR
RG 39 A
BF00
2V
AJN 1 18
NR 2 78
5100
5V NR
NR 1 77
ANR 2 31
BNR 3 62
BBE 4 46
BVE 5 63
5015
46 HAB
RG
1V
RG 39 1
1V
RG 1 1
BMF2
BB00
M000
32V MR
AJN 1 18
RVE 6 27
ANR 11 19
RGN 31 40
1V
RG 1 1
01 CBP
BF01
D3ARM68G

null

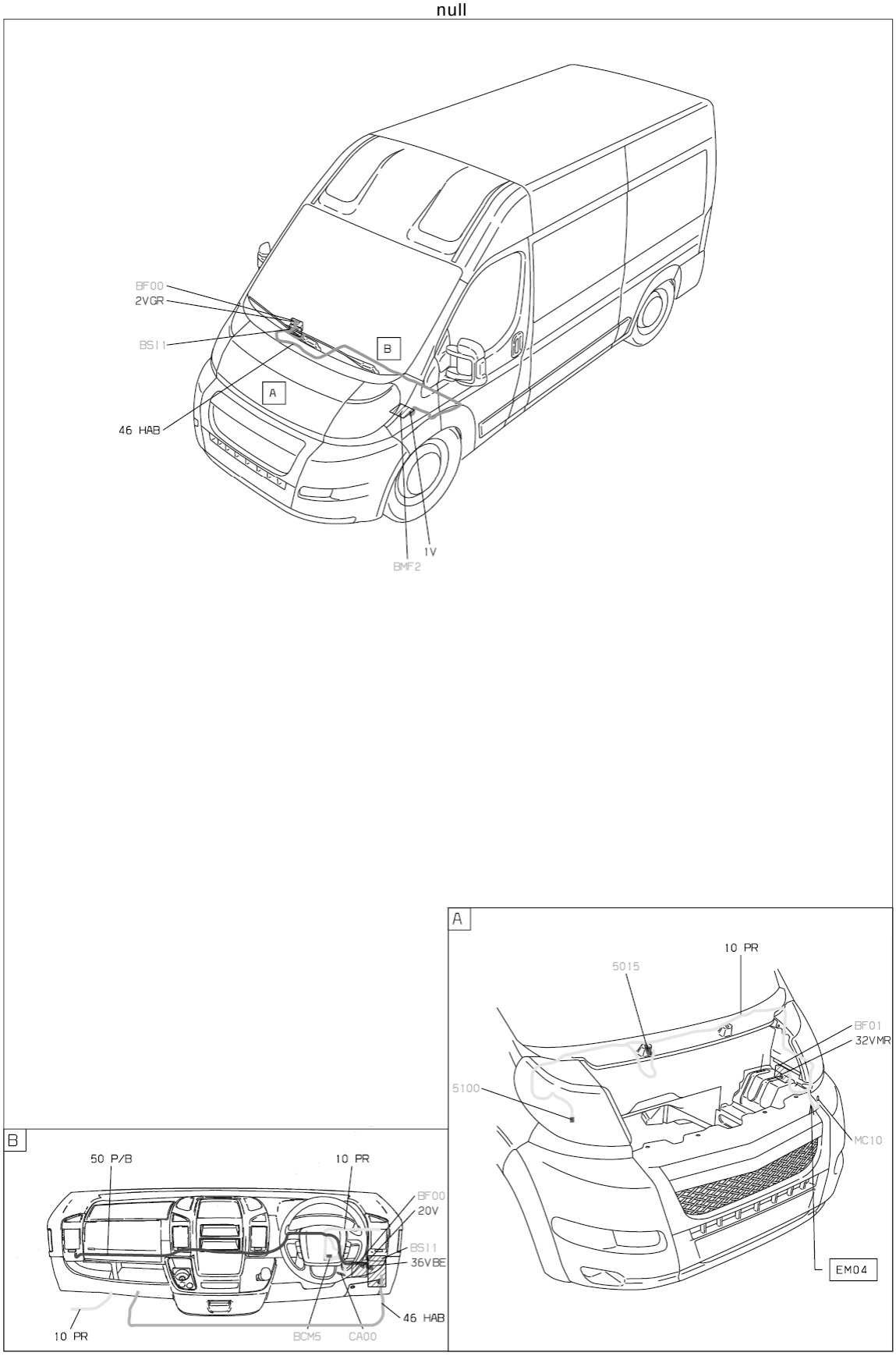

D3ARM68I

property of PSA Peugeot Citroën

23/12/2015

Vehicle

JUMPER

Data

New

Domain

Comfort And Convenience

Function

Rear Additional Aircon

Function Diagram

Principle

Wiring

Installation

9C- 06/10/2013

SVG Viewer

Tools

History

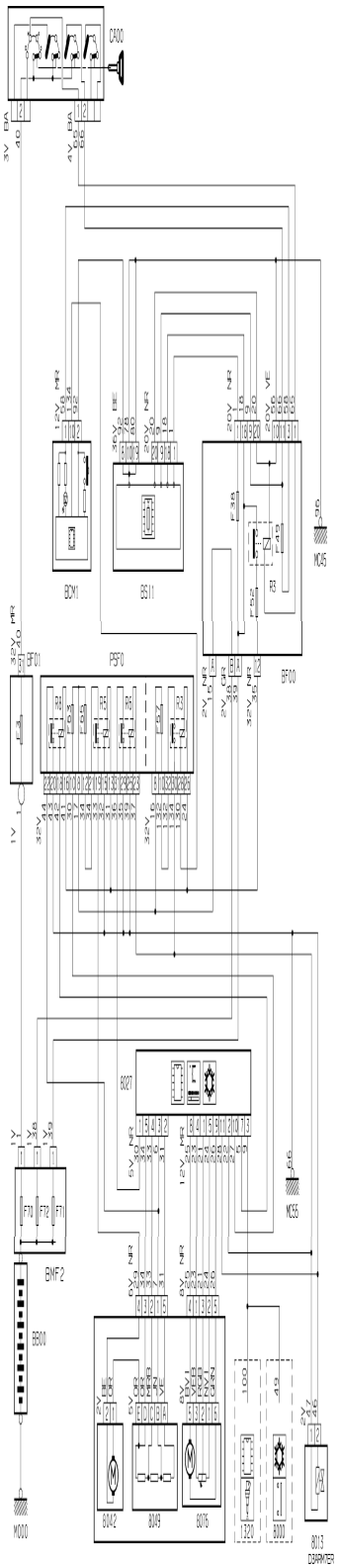
CA00
BCM1
BS11
BF00
BF01
PSF0
MC45
MC55
BMF2
BB00
M000
8042
8049
8076
1320
8000
8013
DBARMTER

Vehicle

JUMPER

Data

New

Domain

Lighting - Signalling

Function

Reversing Lamps

Function Diagram

Principle

Wiring

Installation

9C- 06/10/2013

SVG Viewer

Tools

History

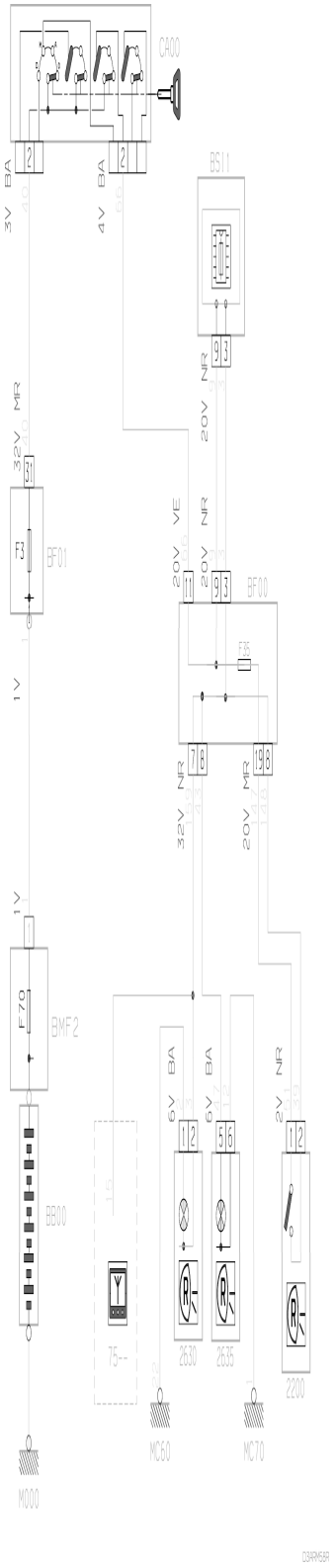
CA00
BS11
BF01
BF00
BMF2
BB00
2630
2635
2200
MC60
MC70
M000

Vehicle

JUMPER

Data

New

Domain

Washing And Wiping

Function

Screen Wipe/Wash

Function Diagram

Principle

Synopsis

Wiring

Installation

9C- 06/10/2013

SVG Viewer

Tools

History

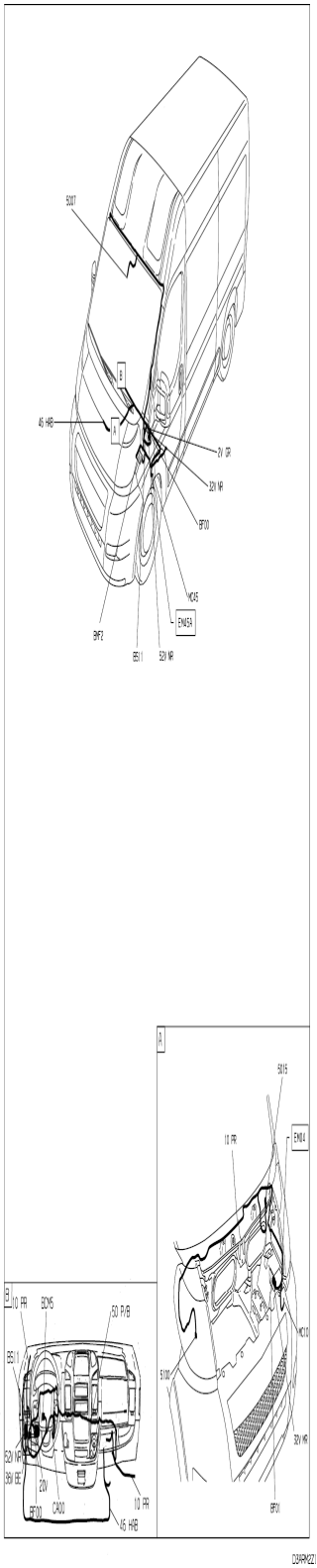
5007
B
A
45 HRB
2V GR
32V MR
BF00
MC45
EM05A
BMF2
BS11
52V MR
A
5015
EM04
10 PR
MC10
5100
32V MR
BF01
B
10 PR
BCM5
50 PVB
BS11
52V MR
36V BE
22V
BF00
CA00
10 PR
45 HRB

DOARMOZZI

Vehicle

JUMPER

Data

New

Domain

Washing And Wiping

Function

Screen Wipe/Wash

Function Diagram

Principle

Synopsis

Wiring

Installation

9C- 06/10/2013

SVG Viewer

Tools

History

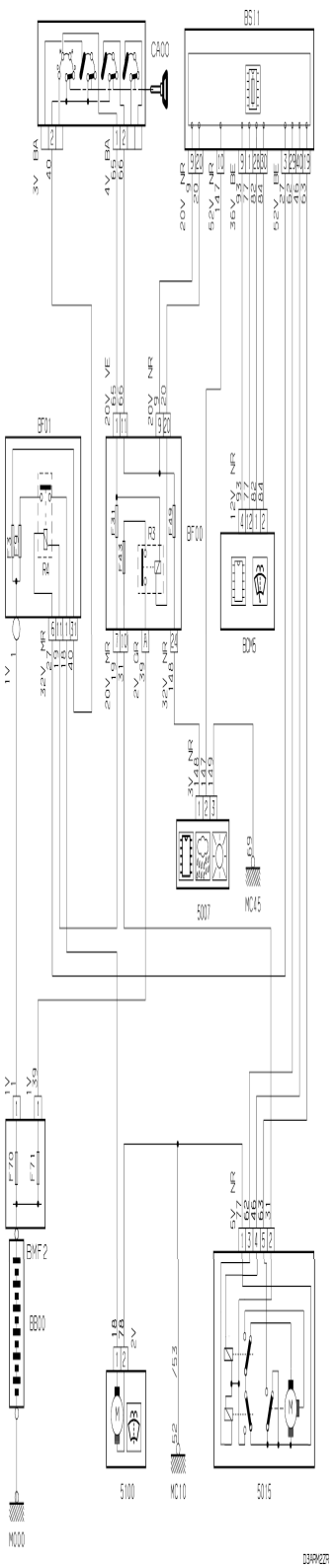
BS11
CA00
BF01
BF00
BDM5
5007
MC45
BMF2
BB00
5100
MC10
5015
M000
D3ARM22R

Vehicle

JUMPER

Data

New

Domain

Washing And Wiping

Function

Screen Wipe/Wash

Function Diagram

Principle

Synopsis

Wiring

Installation

9C- 06/10/2013

SVG Viewer

Tools

History

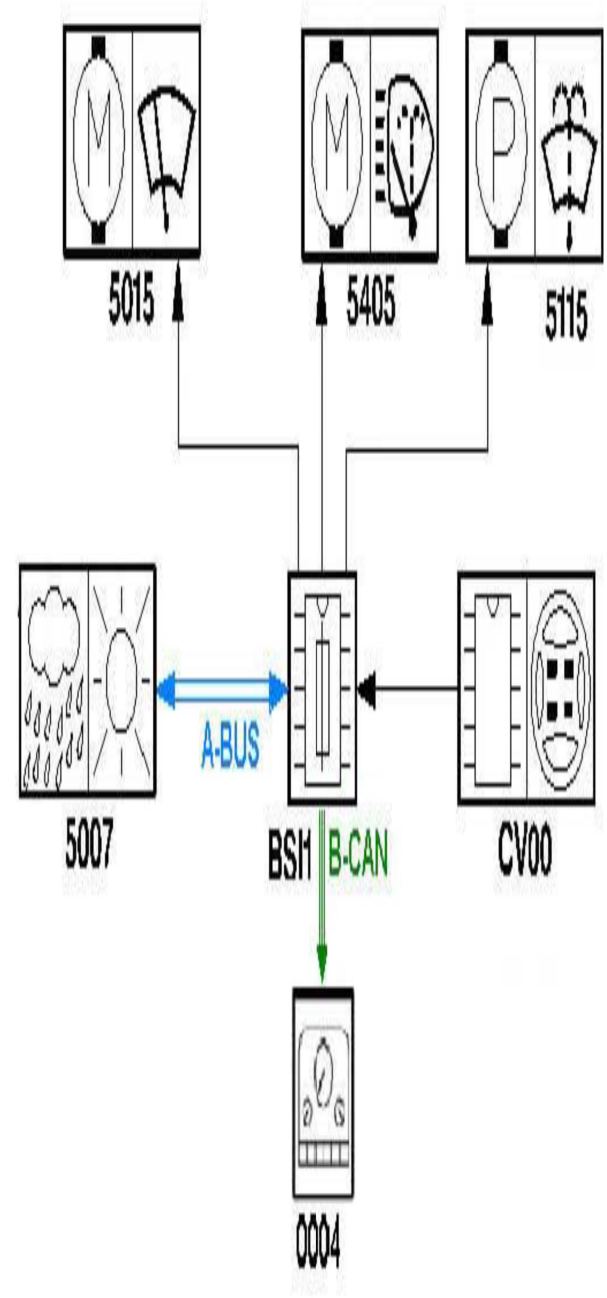
5015
5405
5115
5007
A-BUS
BSI1
B-CAN
CV00
0004
C-CAN (500 Kbit/s)
B-CAN (50 Kbit/s)
A-BUS (9,6 Kbit/s)
K-LINE (9,6 Kbit/s)

Vehicle

JUMPER

Data

New

Domain

Protections And Doors

Function

Seat Belts / Air Bags

Function Diagram

Principle

Principle

Wiring

Wiring

Installation

Installation

9C- 06/10/2013

SVG Viewer

Tools

History


6576
A
6575
BF00
2VGR
45 HRB
BS11
6570
24VHR
BMF2
A
10 PR
BF01
22VHR
B
10 PR
0004
EM45
50 PVB
6555
BS11
36VEE
20V
BF00
CT00
CA00
MC45
6570
MC14
45 HRB

DX2257N1

Vehicle

JUMPER

Data

New

Domain

Protections And Doors

Function

Seat Belts / Air Bags

Function Diagram

Principle

Principle

Wiring

Wiring

Installation

Installation

9C- 06/10/2013

SVG Viewer

Tools

History

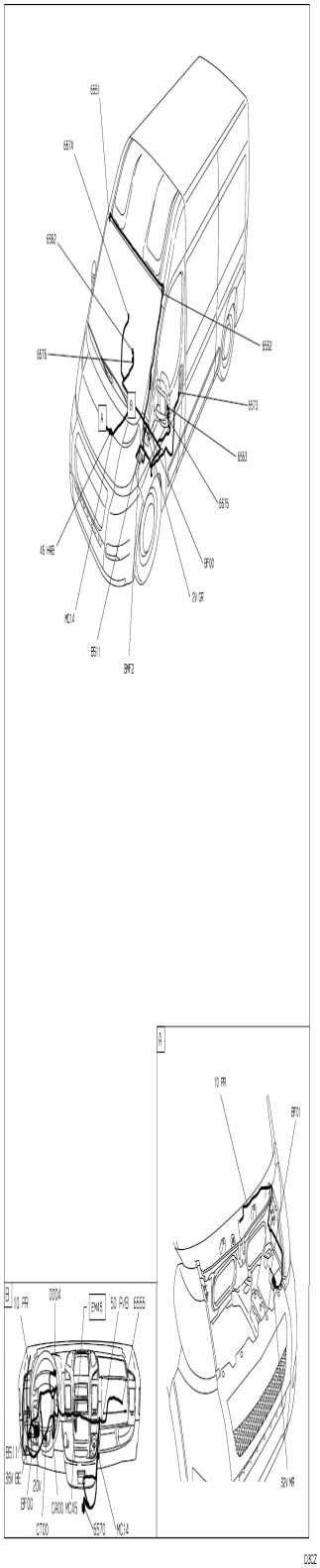
A
B
C
D
EMS
BF01
BF02
BF03
BF04
BF05
BF06
BF07
BF08
BF09
BF10
BF11
BF12
BF13
BF14
BF15
BF16
BF17
BF18
BF19
BF20
BF21
BF22
BF23
BF24
BF25
BF26
BF27
BF28
BF29
BF30
BF31
BF32
BF33
BF34
BF35
BF36
BF37
BF38
BF39
BF40

Vehicle

JUMPER

Data

New

Domain

Protections And Doors

Function

Seat Belts / Air Bags

Function Diagram

Principle

Principle

Wiring

Wiring

Installation

Installation

9C- 06/10/2013

SVG Viewer

Tools

History

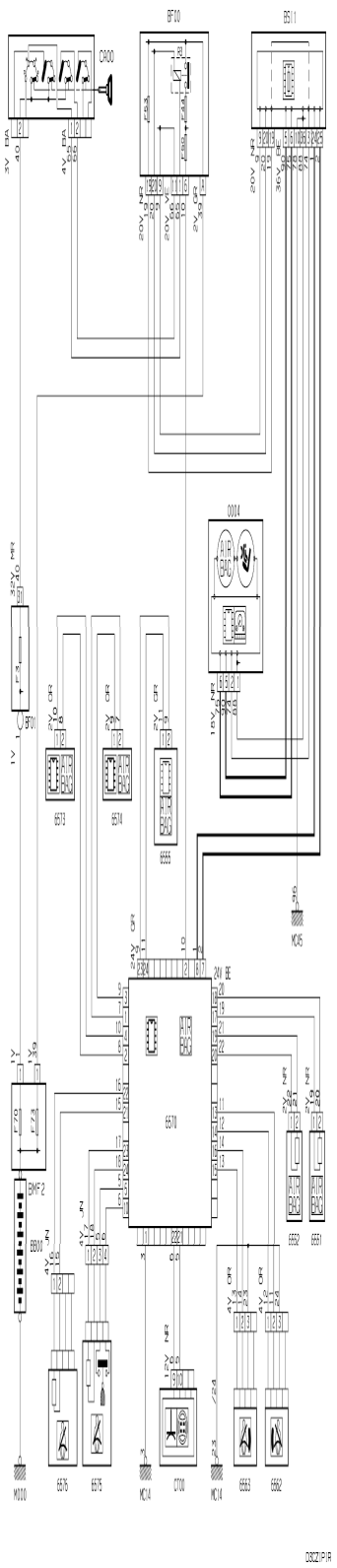

Vehicle

JUMPER

Data

New

Domain

Protections And Doors

Function

Seat Belts / Air Bags

Function Diagram

Principle

Principle

Wiring

Wiring

Installation

Installation

9C- 06/10/2013

SVG Viewer

Tools

History

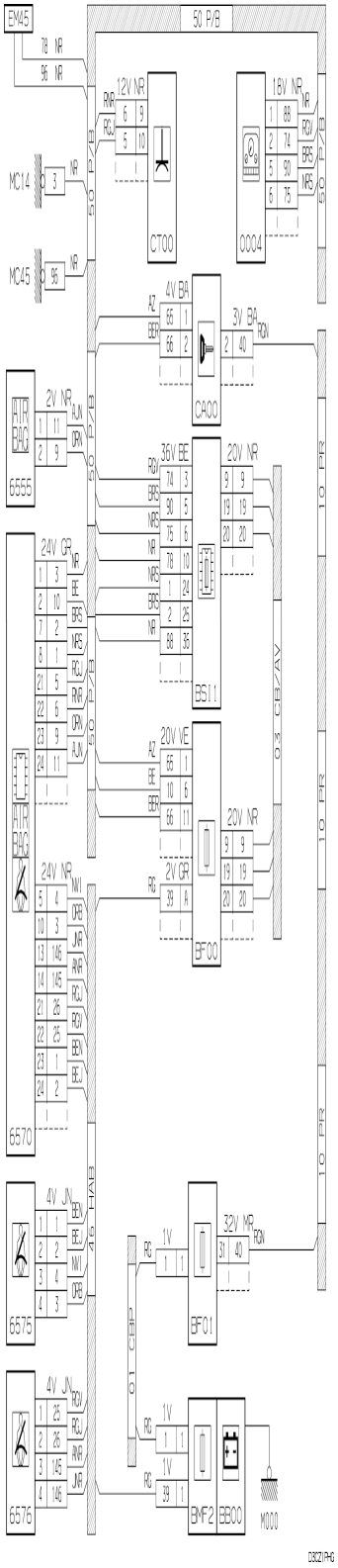
EM45
50 P/B
12V NR
18V NR
CT00
0004
MC14
MC45
4V BA
3V BA
CA00
2V NR
6555
36V BE
20V NR
BS11
24V GR
20V VE
BF00
24V NR
6570
4V JN
6575
32V MR
BF01
6576
BMF2
BB00
M000
D3CZ1PHG

Vehicle

JUMPER

Data

New

Domain

Protections And Doors

Function

Seat Belts / Air Bags

Function Diagram

Principle

Principle

Wiring

Wiring

Installation

Installation

9C- 06/10/2013

SVG Viewer

Tools

History

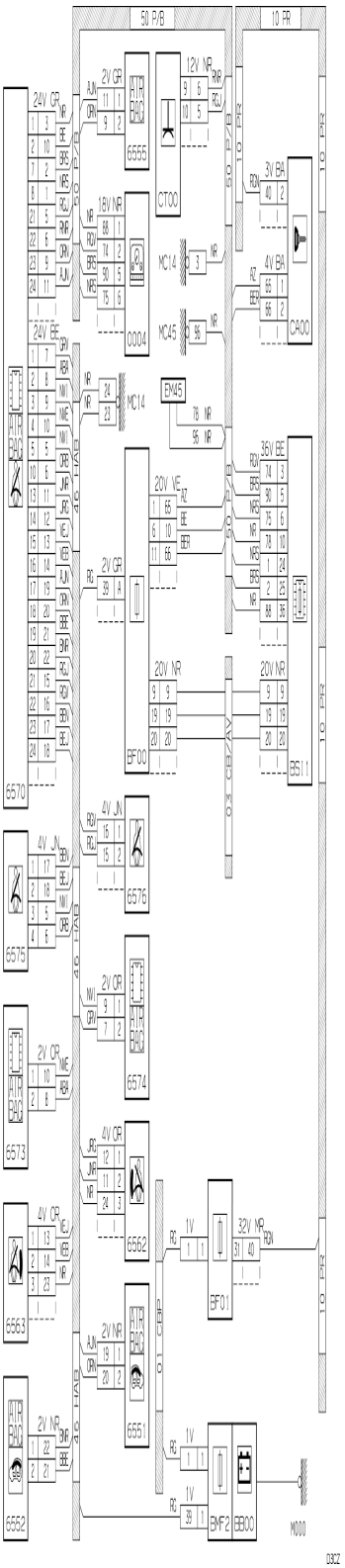
50 P/B
10 PR
24V GR
2V GR
12V NR
18V NR
3V BA
4V BA
CT00
MC14
MC45
0004
CA00
EM45
24V BE
36V BE
20V NE
20V NR
BF00
BS11
6570
4V JN
6576
6575
2V OR
6574
6573
4V OR
6562
6563
32V NR
BF01
2V NR
6551
6552
BMF2
BB00
M000
D3CZ

vehicle : RELAY III		OPR : 12937717	
domain	protections and doors	function	seat belts / air bags
component			

principle

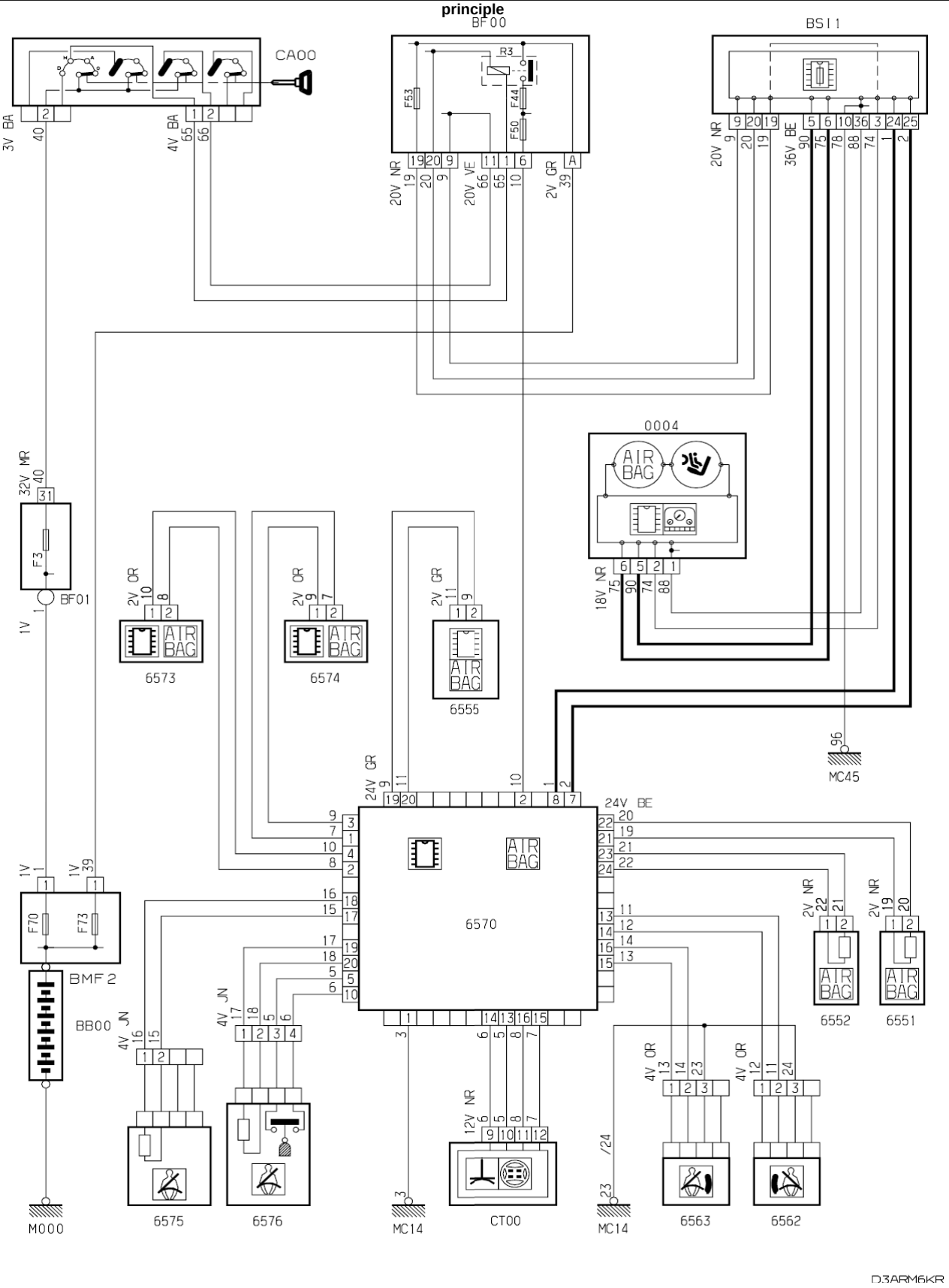

D3ARM6KR

wiring

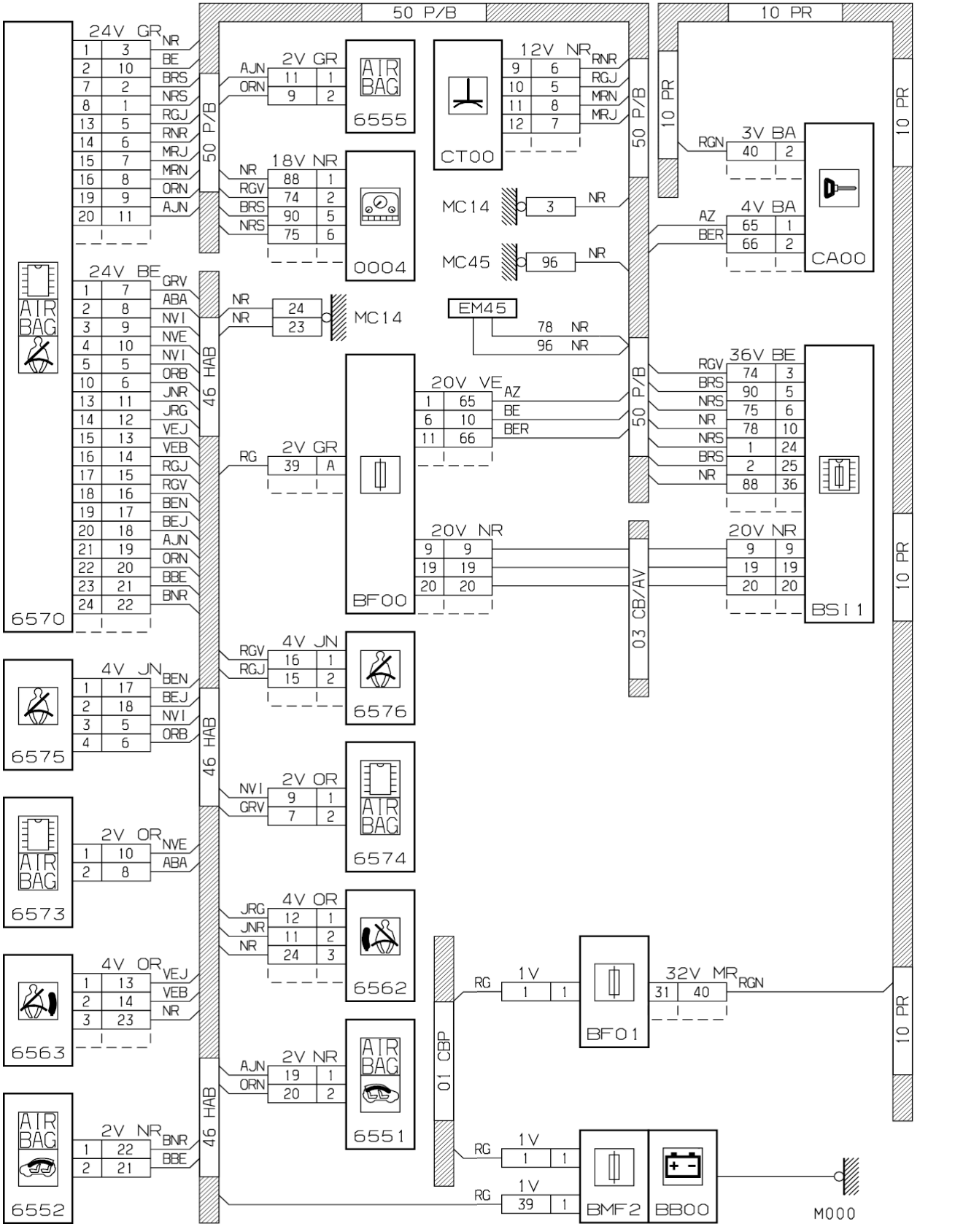
50 P/B
10 PR
24V GR
NR
BE
BRS
NRS
RGJ
RNR
MRJ
MRN
ORN
AJN
2V GR
AJN
ORN
AIR BAG
6555
12V NR
RNR
RGJ
MRN
MRJ
CT00
18V NR
NR
RGV
BRS
NRS
0004
MC14
MC45
3V BA
RGN
4V BA
AZ
BER
CA00
24V BE
GRV
ABA
NVI
NVE
NVI
ORB
JNR
JRG
VEJ
VEB
RGJ
RGV
BEN
BEJ
AJN
ORN
BBE
BNR
46 HAB
EM45
78 NR
96 NR
36V BE
20V VE
AZ
BE
BER
2V GR
RG
BF00
20V NR
03 CB/AV
BSI1
6570
4V JN
BEN
BEJ
NVI
ORB
6575
4V JN
RGV
RGJ
6576
2V OR
NVI
GRV
6574
2V OR
NVE
ABA
6573
4V OR
JRG
JNR
NR
6562
4V OR
VEJ
VEB
NR
6563
2V NR
AJN
ORN
6551
2V NR
BNR
BBE
6552
01 CBP
1V
BF01
32V MR
RGN
BMF2
BB00
M000
D3AR

null

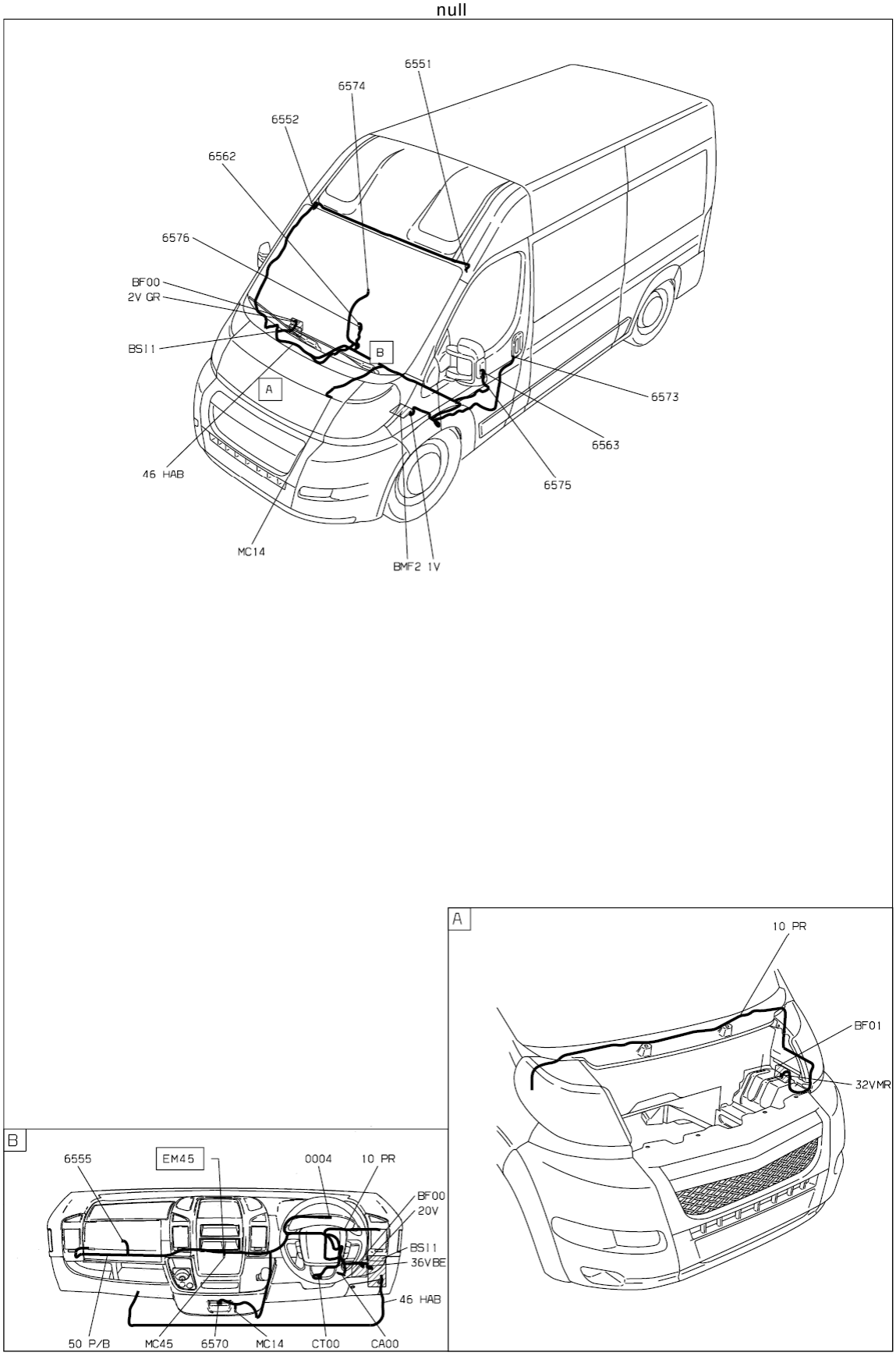

D3ARM6K1

property of PSA Peugeot Citroën

23/12/2015

Vehicle

JUMPER

Data

New

Domain

Lighting - Signalling

Function

Sidelamps

Function Diagram

Principle

Wiring

Installation

9C- 06/10/2013

SVG Viewer

Tools

History

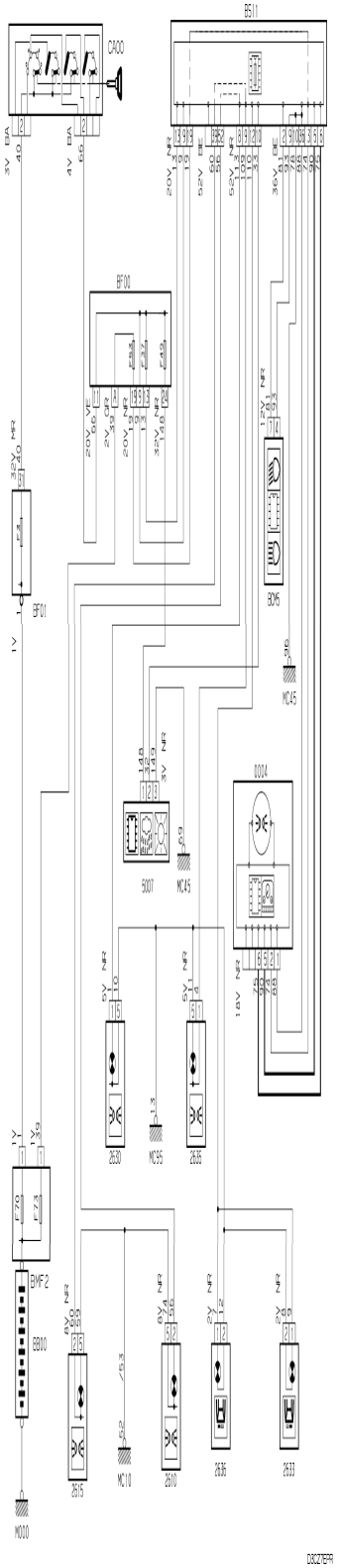

Vehicle

JUMPER

Data

New

Domain

Driving Assistance

Function

Stability Control

Function Diagram

Principle

Wiring

Installation

9C- 06/10/2013

SVG Viewer

Tools

History

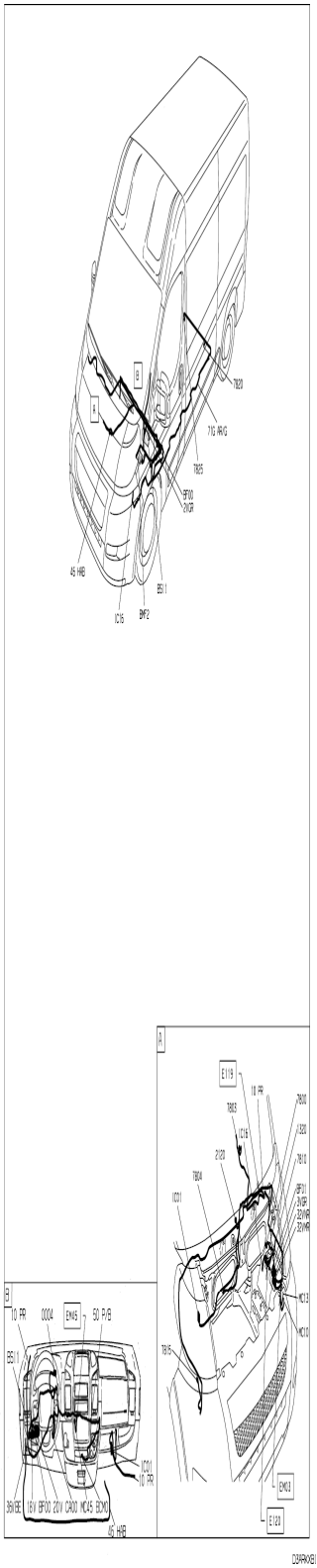
B
A
7820
71G AR/G
7825
BF00
2WGR
45 HAB
BS11
IC16
BMF2
A
E119
10 PR
7800
7803
IC16
1320
2120
7810
7804
BF01
3WGR
32WHR
32WHR
IC01
MC13
MC10
7815
EM03
E120
B
10 PR
0004
EM45
50 P/B
BS11
IC01
10 PR
36VBE
18V
BF00
20V
CA00
MC45
BCM0
45 HAB

D3AR0081

Vehicle

JUMPER

Data

New

Domain

Driving Assistance

Function

Stability Control

Function Diagram

Principle

Wiring

Installation

9C- 06/10/2013

SVG Viewer

Tools

History

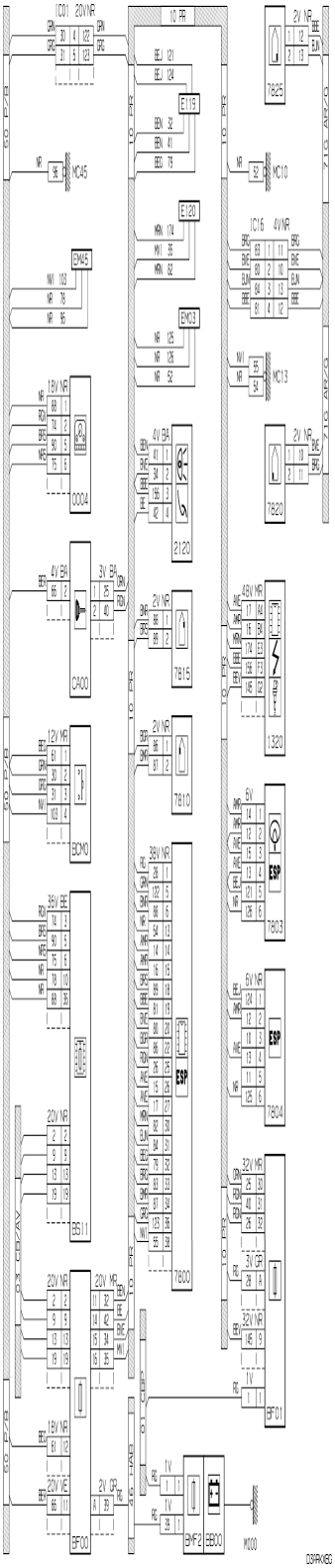

Vehicle

JUMPER

Data

New

Domain

Driving Assistance

Function

Stability Control

Function Diagram

Principle

Wiring

Installation

9C- 06/10/2013

SVG Viewer

Tools

History

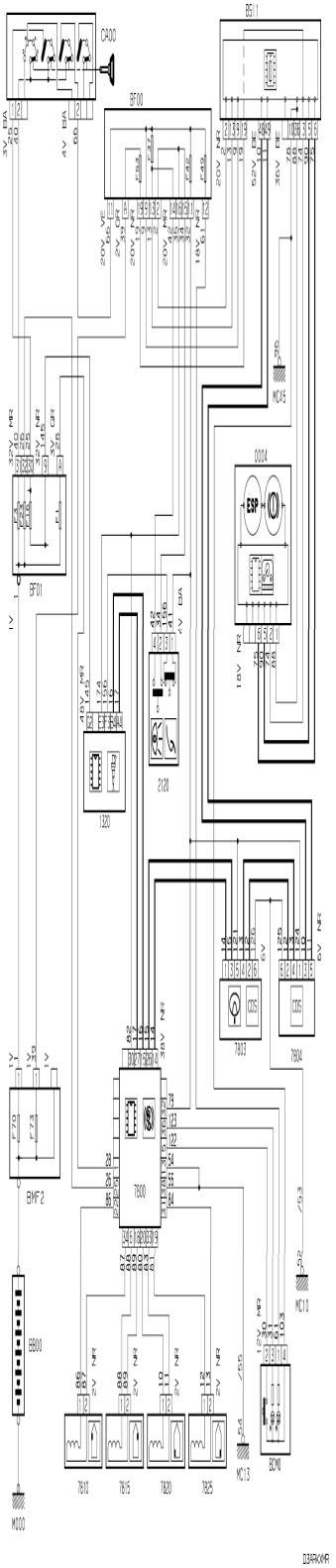

Vehicle

JUMPER

Data

New

Domain

Driver Information

Function

Tachograph

Function Diagram

Principle

Wiring

Installation

9C- 06/10/2013

SVG Viewer

Tools

History

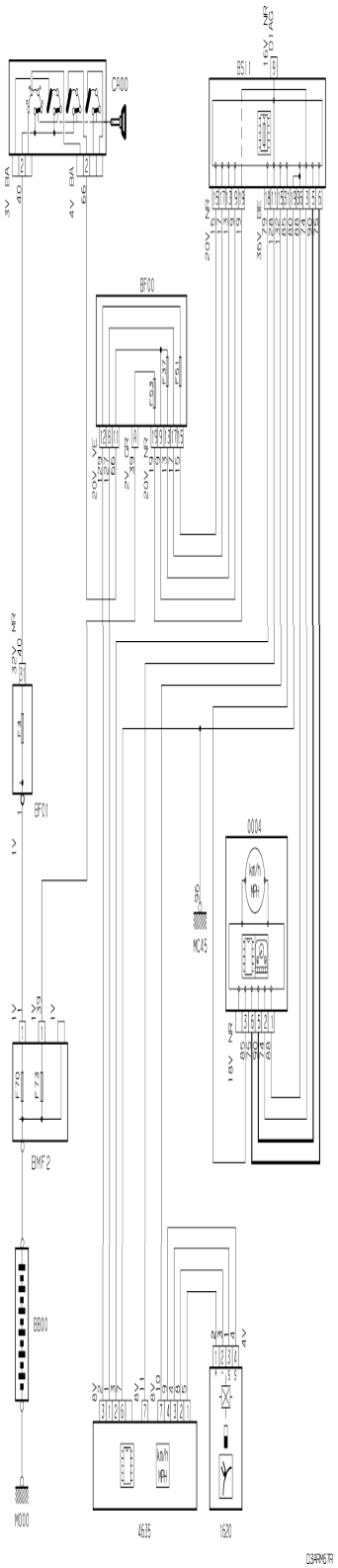
CA00
BS11
BF00
BF01
0004
MC45
BMF2
BB00
M000
4635
1620

Vehicle

JUMPER

Data

New

Domain

Driver Information

Function

Tachograph

Function Diagram

Principle

Synopsis

Wiring

Installation

9C- 06/10/2013

SVG Viewer

Tools

History

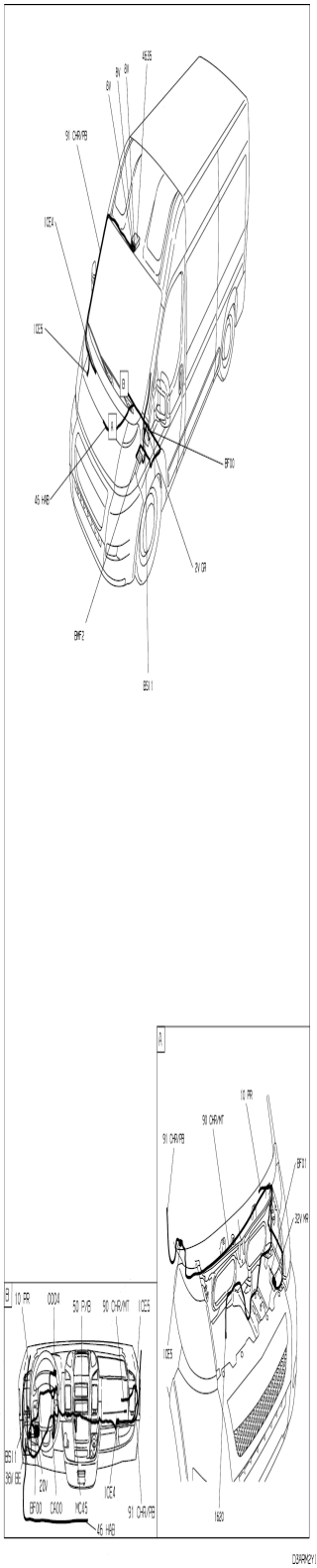
45.35
8V
8V
8V
91 CHR/PB
ICE4
ICE5
B
BF00
45 HAB
2V GR
BMF2
BS11
A
10 PR
90 CHR/MT
91 CHR/PB
BF01
32V MR
ICE5
1620
B
10 PR
0004
50 PVB
90 CHR/MT
ICE5
BS11
36V BE
22V
BF00
C400
MC45
ICE4
91 CHR/PB
45 HAB

DIAGRAM2Y1

Vehicle

JUMPER

Data

New

Domain

Driver Information

Function

Tachograph

Function Diagram

Principle

Synopsis

Wiring

Installation

9C- 06/10/2013

SVG Viewer

Tools

History

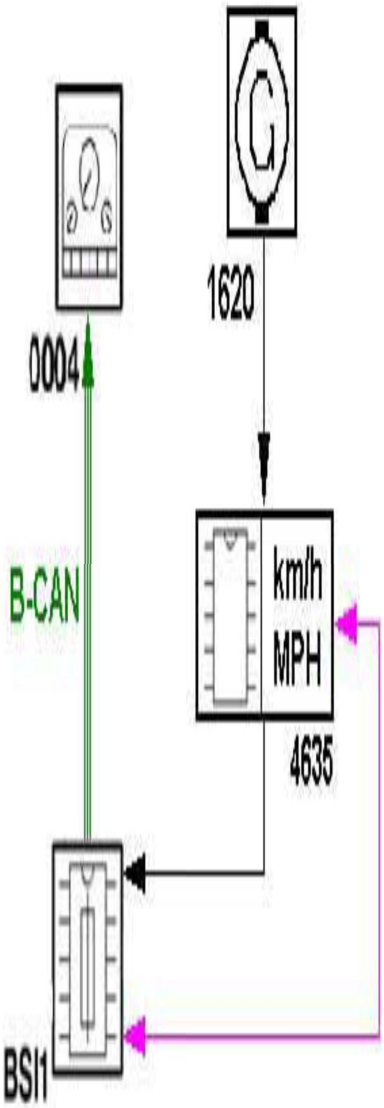

C-CAN (500 Kbit/s) B-CAN (50 Kbit/s) A-BUS (9,6 Kbit/s) K-LINE (9,6 Kbit/s)

Vehicle

JUMPER

Data

New

Domain

Driver Information

Function

Tachograph

Function Diagram

Principle

Synopsis

Wiring

Installation

9C- 06/10/2013

SVG Viewer

Tools

History

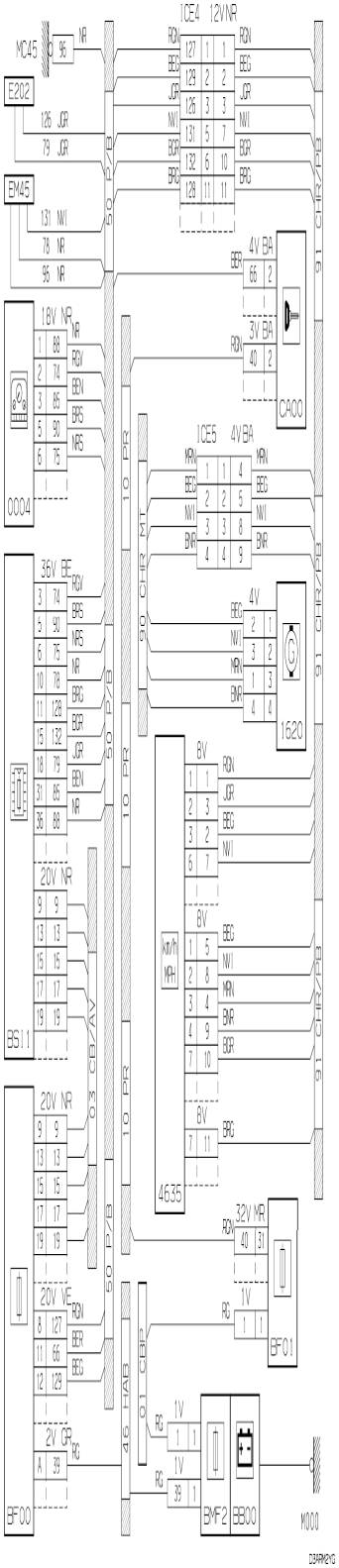
ICE4 12VNR
MG45
E202
EM45
18V NR
0004
36V BE
20V NR
BS11
20V NR
20V VE
2V GR
BF00
4V BA
3V BA
CA00
ICE5 4V BA
4V
1620
8V
4635
32V MR
1V
BF01
BMF2
BB00
M000
50 P/B
10 PR
90 CHR MT
91 CHR/PB
03 CB/AV
46 HAB
01 CBP
D3ARM2YG

Vehicle

JUMPER

Data

New

Domain

Comfort And Convenience

Function

Telematics

Function Diagram

Principle

Wiring

Installation

9C- 06/10/2013

SVG Viewer

Tools

History

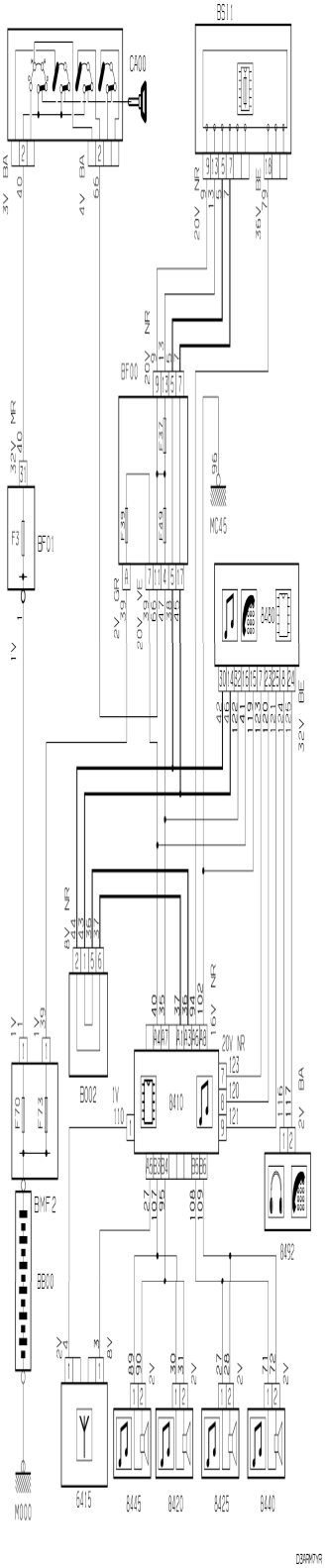
BS11
CA00
BF00
BF01
MC45
B480
B002
B410
BMF2
BB00
8492
6415
8445
8420
8425
8440
M000
DRAWN

Vehicle

JUMPER

Data

New

Domain

Comfort And Convenience

Function

Telematics

Function Diagram

Principle

Synopsis

Wiring

Installation

9C- 06/10/2013

SVG Viewer

Tools

History

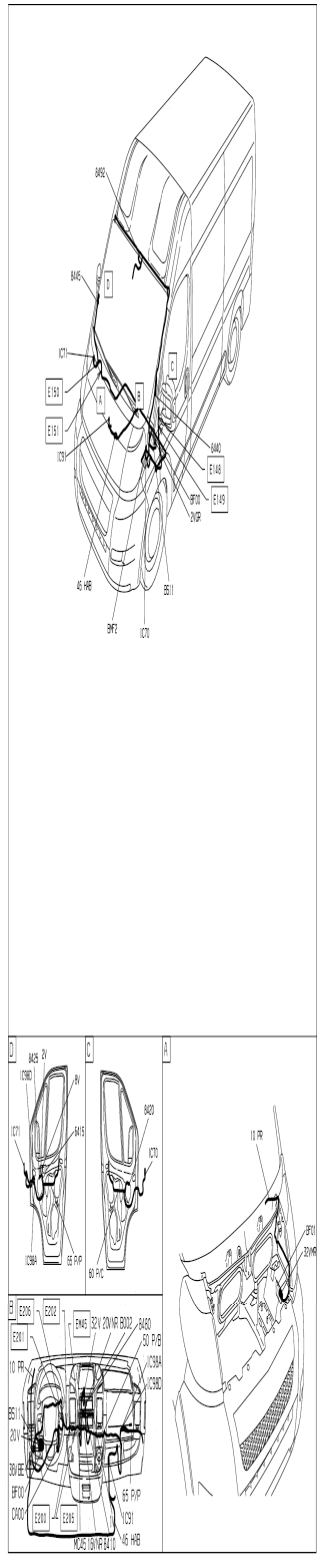
8492
8445
D
1C71
E150
E151
1C91
A
B
C
8440
E148
E149
BF00
2VGR
45 HRB
BF02
1C70
B511
D
8425
2V
1C98D
8V
1C71
8415
1C98A
65 PVP
C
8420
1C70
60 PVC
A
10 PR
BF00
32VHR
B
E206
E202
E201
E445
32V 20VHR B002
8480
50 PVB
1C98A
1C98D
10 PR
B511
20V
30VBE
BF00
CA00
E200
E205
65 PVP
1C91
45 HRB
MC45 15VHR 8410

DIAGRAM1

Vehicle

JUMPER

Data

New

Domain

Comfort And Convenience

Function

Telematics

Function Diagram

Principle

Synopsis

Wiring

Installation

9C- 06/10/2013

SVG Viewer

Tools

History

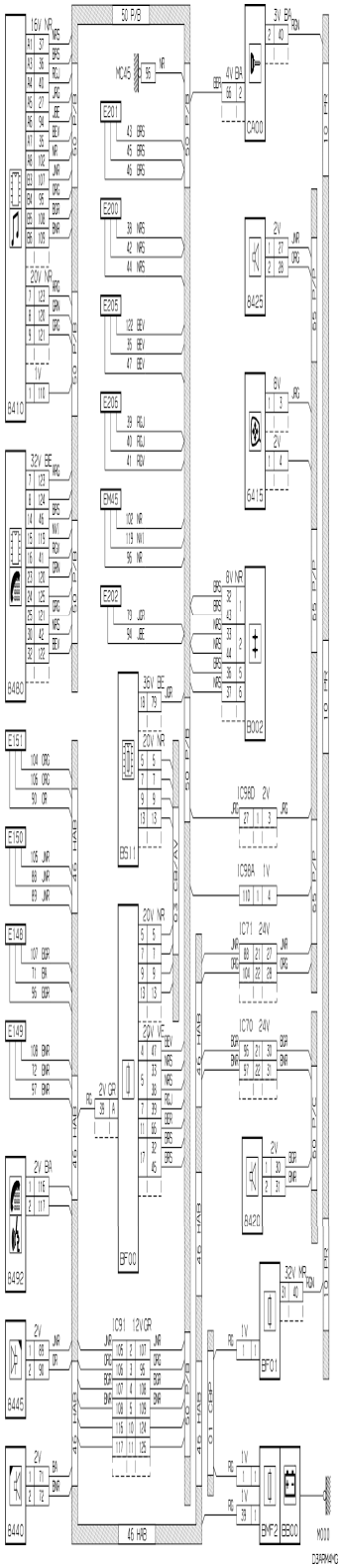
50 PVB
MC45
E201
E200
E205
E206
EM45
E202
B410
B480
E151
E150
E148
E149
B492
B445
B440
BS11
BF00
IC91 12VGR
46 HAB
CA00
B425
B415
B002
IC98D 2V
IC98A 1V
IC71 24V
IC70 24V
B420
BF01
BMF2
BB00
M000
D3ARMAMG

Vehicle

JUMPER

Data

New

Domain

Comfort And Convenience

Function

Ventilation / Heating

Function Diagram

Principle

Wiring

Installation

9C- 06/10/2013

SVG Viewer

Tools

History

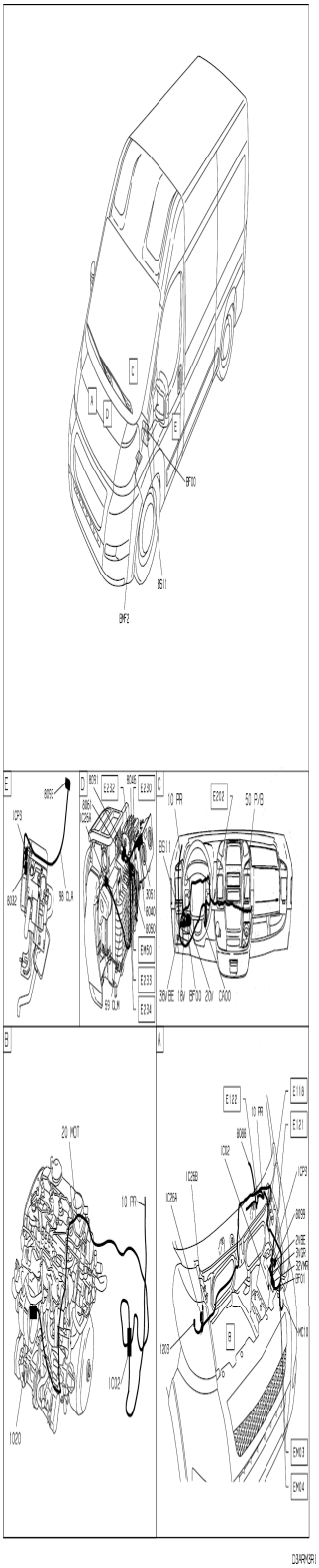
A
B
C
D
E
BF00
BS11
BMF2
E232
E230
E233
E234
EM50
10 PPR
E202
50 PVB
BS11
2D MOT
10 PPR
1C02
1020
E122
E118
E121
EM03
EM04

D3AR9GR1

Vehicle

JUMPER

Data

New

Domain

Comfort And Convenience

Function

Ventilation / Heating

Function Diagram

Principle

Wiring

Installation

9C- 06/10/2013

SVG Viewer

Tools

History

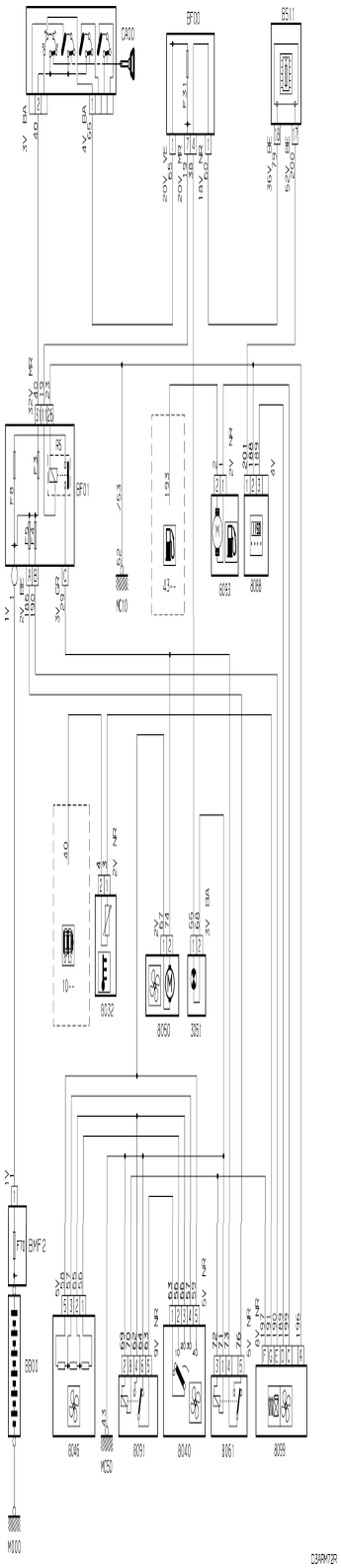

Vehicle

JUMPER

Data

New

Domain

Comfort And Convenience

Function

Ventilation / Heating

Function Diagram

Principle

Wiring

Installation

9C- 06/10/2013

SVG Viewer

Tools

History

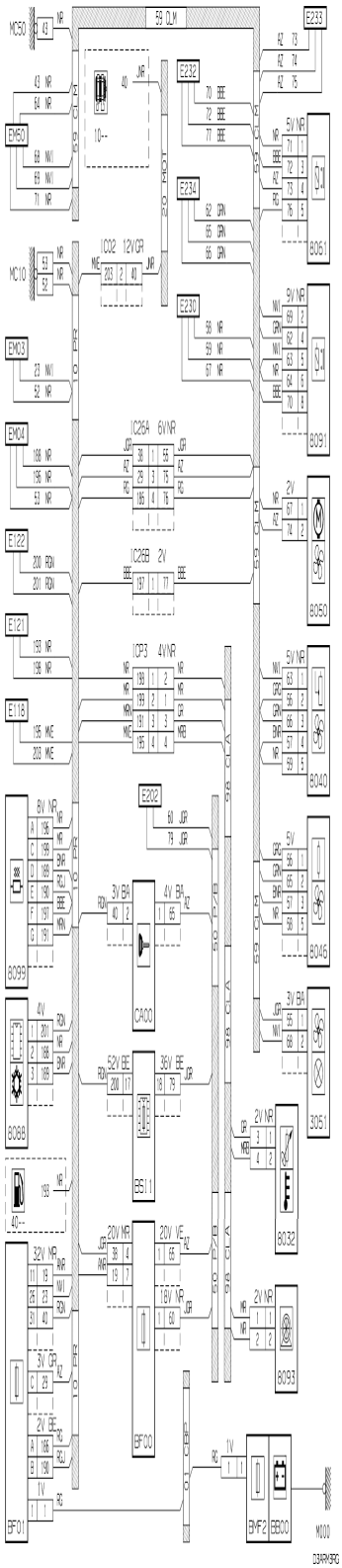

Vehicle

JUMPER

Data

New

Domain

Washing And Wiping

Function

Screen Wipe/Wash

Function Diagram

Principle

Synopsis

Wiring

Installation

9C- 06/10/2013

SVG Viewer

Tools

History

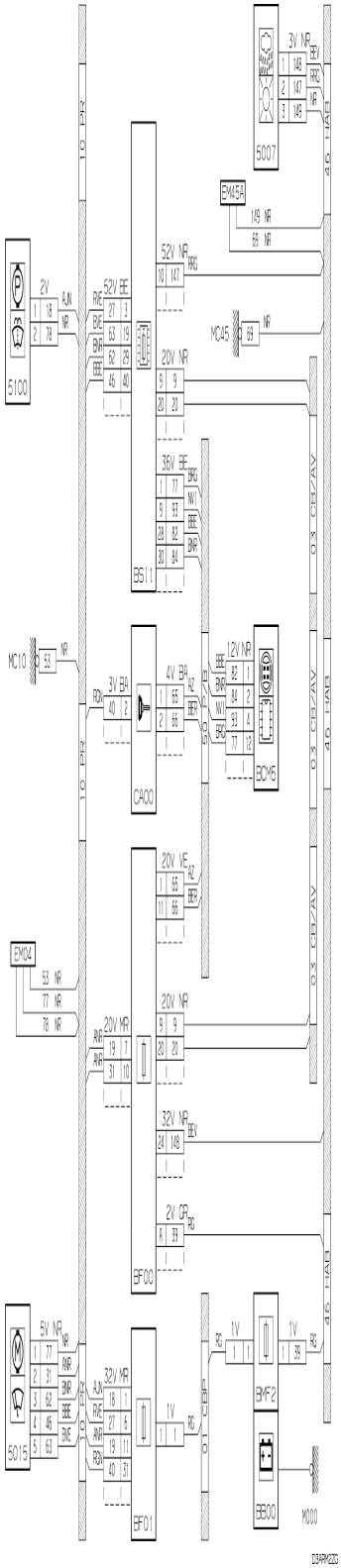
5007
3V NR
EM45A
149 NR
66 NR
52V NR
MC45
5100
2V
52V BE
20V NR
36V BE
BS11
MC10
3V BA
4V BA
CA00
12V NR
BCM5
20V VE
EM04
53 NR
77 NR
78 NR
20V MR
20V NR
32V NR
2V GR
BF00
5V NR
5015
32V MR
1V
BF01
BMF2
BB00
M000
10 PR
46 HAR
03 CB/AV
01 CBP
D3ARM22G

Vehicle

JUMPER

Data

New

Domain

Washing And Wiping

Function

Screen Wipe/Wash

Function Diagram

Principle

Wiring

Installation

9C- 06/10/2013

SVG Viewer

Tools

History

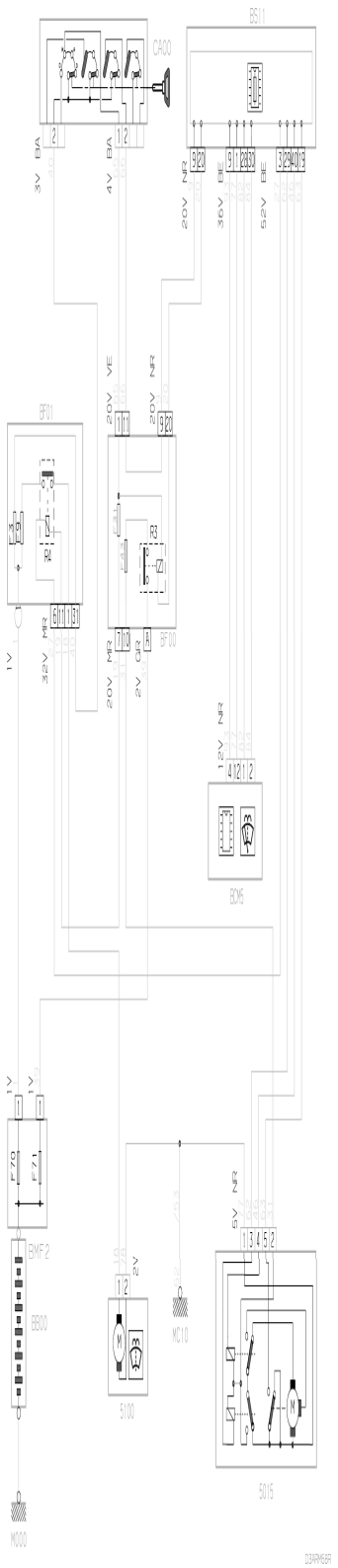
BS11
CA00
BF01
BF00
BC05
BMF2
BB00
MC10
5100
5015
M000

Vehicle

JUMPER

Data

New

Domain

Protections And Doors

Function

Alarm

Function Diagram

Principle

Synopsis

Wiring

Installation

9C- 06/10/2013

SVG Viewer

Tools

History

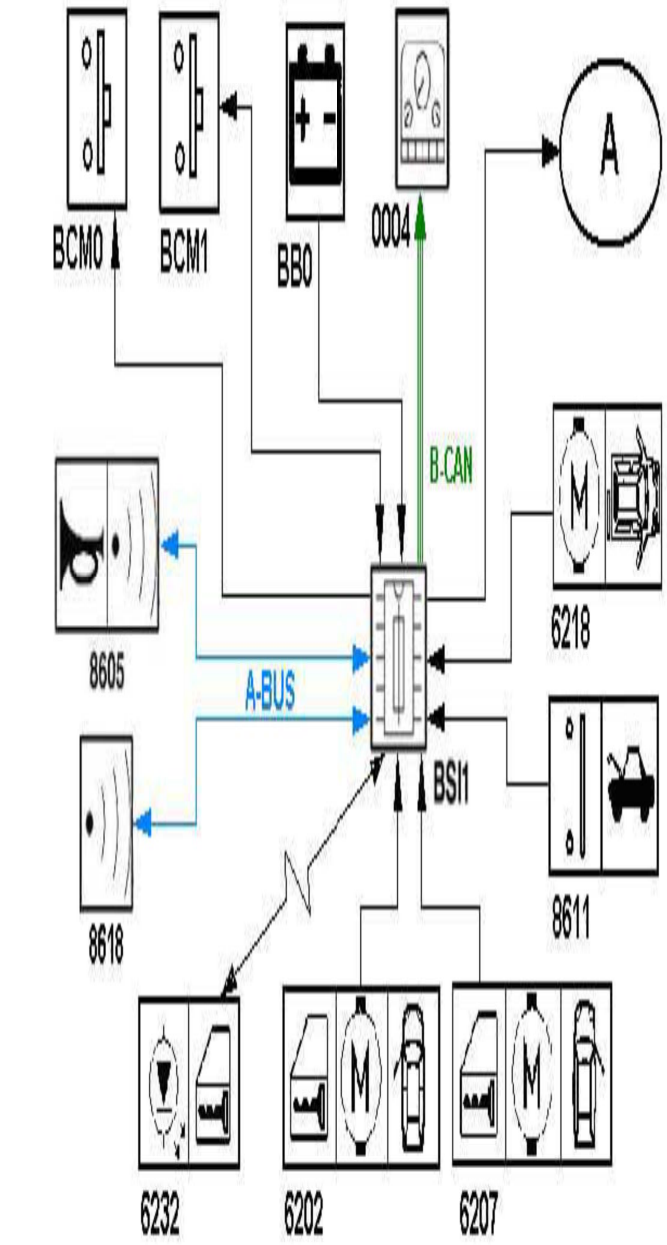
BCM0
BCM1
BB0
0004
A
B-CAN
8605
A-BUS
6218
BSI1
8618
8611
6232
6202
6207

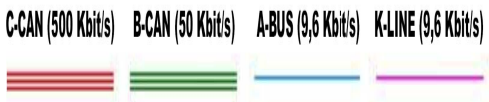
C-CAN (500 Kbit/s)
B-CAN (50 Kbit/s)
A-BUS (9,6 Kbit/s)
K-LINE (9,6 Kbit/s)

Vehicle

JUMPER

Data

New

Domain

Comfort And Convenience

Function

Additional Heating Unit

Function Diagram

Principle

Wiring

Installation

9C- 06/10/2013

SVG Viewer

Tools

History

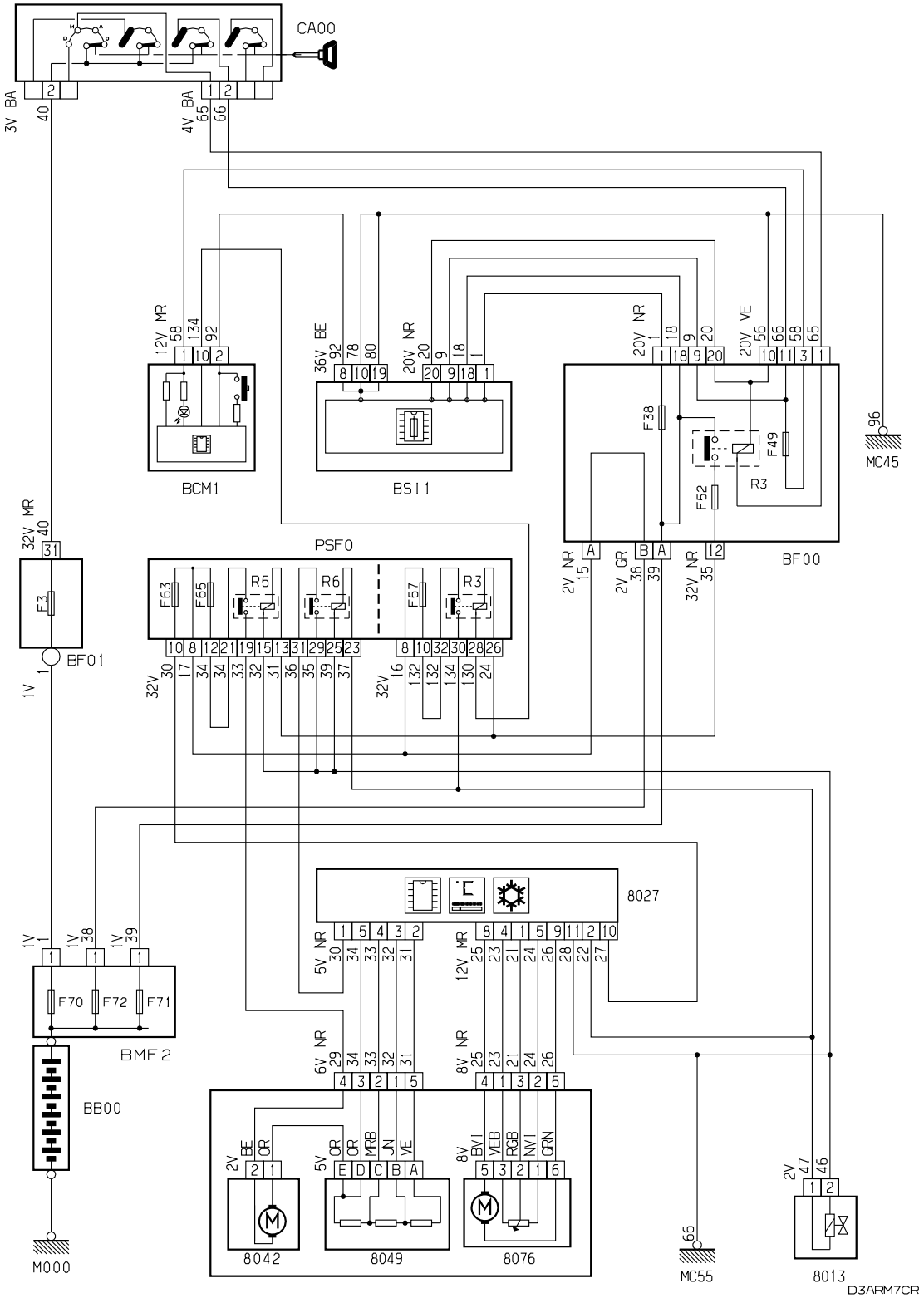

Vehicle

JUMPER

Data

New

Domain

General Points

Function

Allocation Of PSF0 Fuses

Function Diagram

General

9C- 06/10/2013

SVG Viewer

Tools

History

U9PSF001	ALLOCATION OF PSF0 FUSES

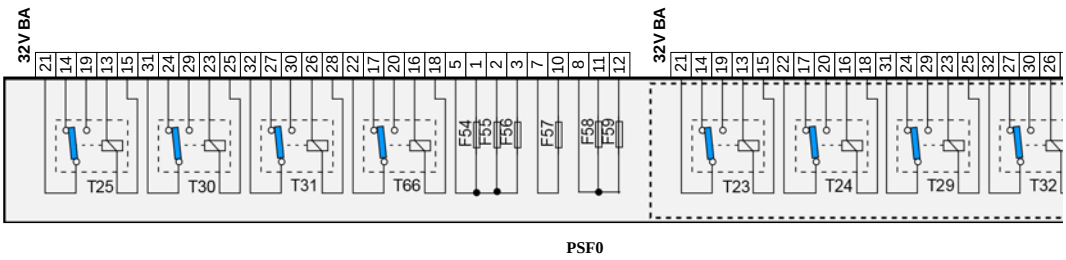

PSF0

fig. U9PSF0PR

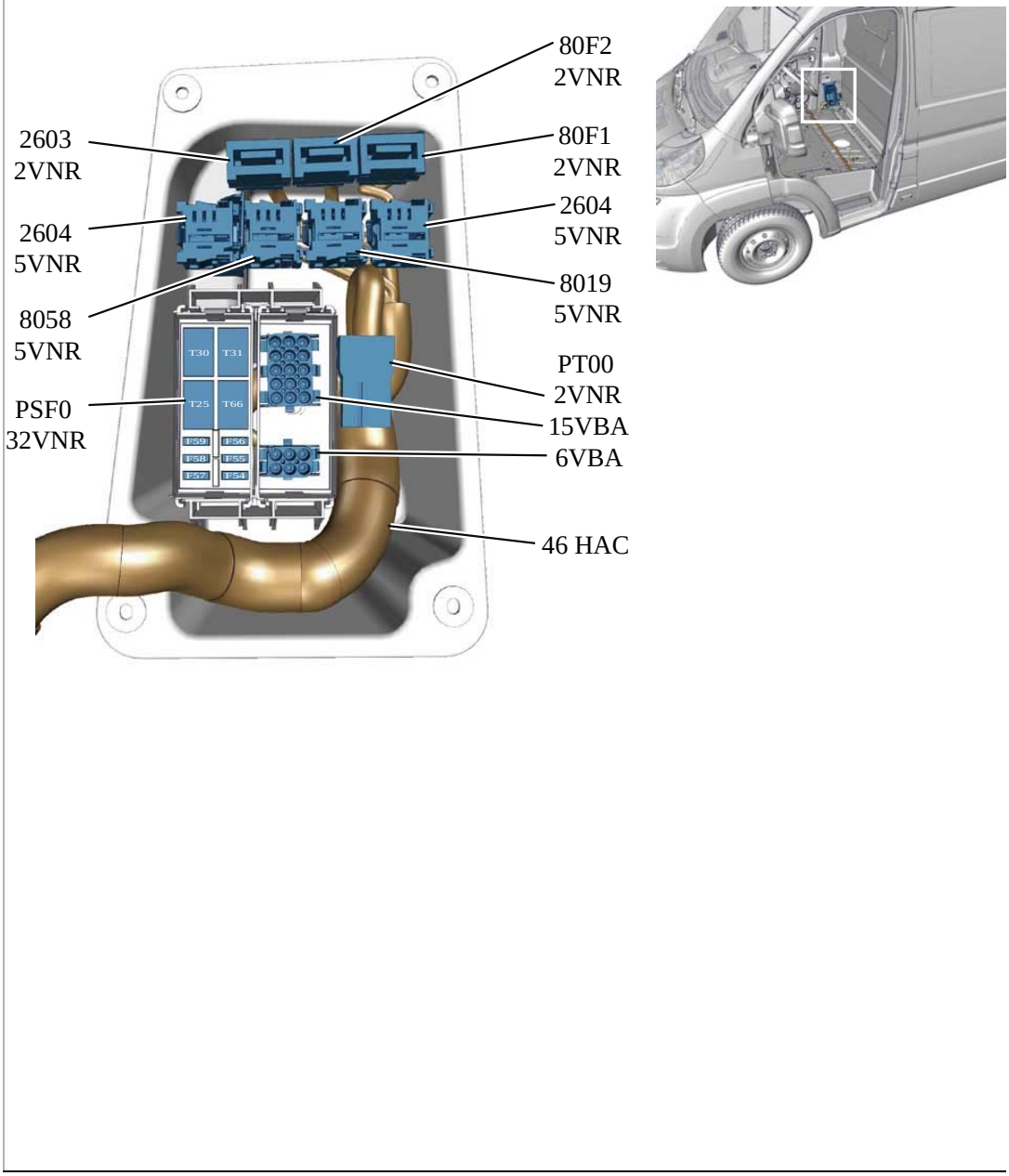

fig. D3CZ94VI

allocation of PSF0 fuses

fuse	A	supply	matching
T25	-	-	Minibus interior lighting
T30	-	-	heated screens
T31	-	-	under-seat heating, rear additional heating/air conditioning
T66	-	-	heated seats
F54	15A	+BATT	minibus ventilation
F55	15A	+BATT	heated seats
F56	15A	+BATT	prise 12 v arriere
F57	10A	+BATT	under-seat heating, rear additional heating/air conditioning
F58	15A	+BATT	LH heated rear screen
F59	15A	+BATT	RH heated rear screen

Vehicle

JUMPER

Data

New

Domain

General Points

Function

Diagnostic Socket

Function Diagram

General

9C- 06/10/2013

SVG Viewer

Tools

History

U9DIAG01	DIAGNOSTIC SOCKET

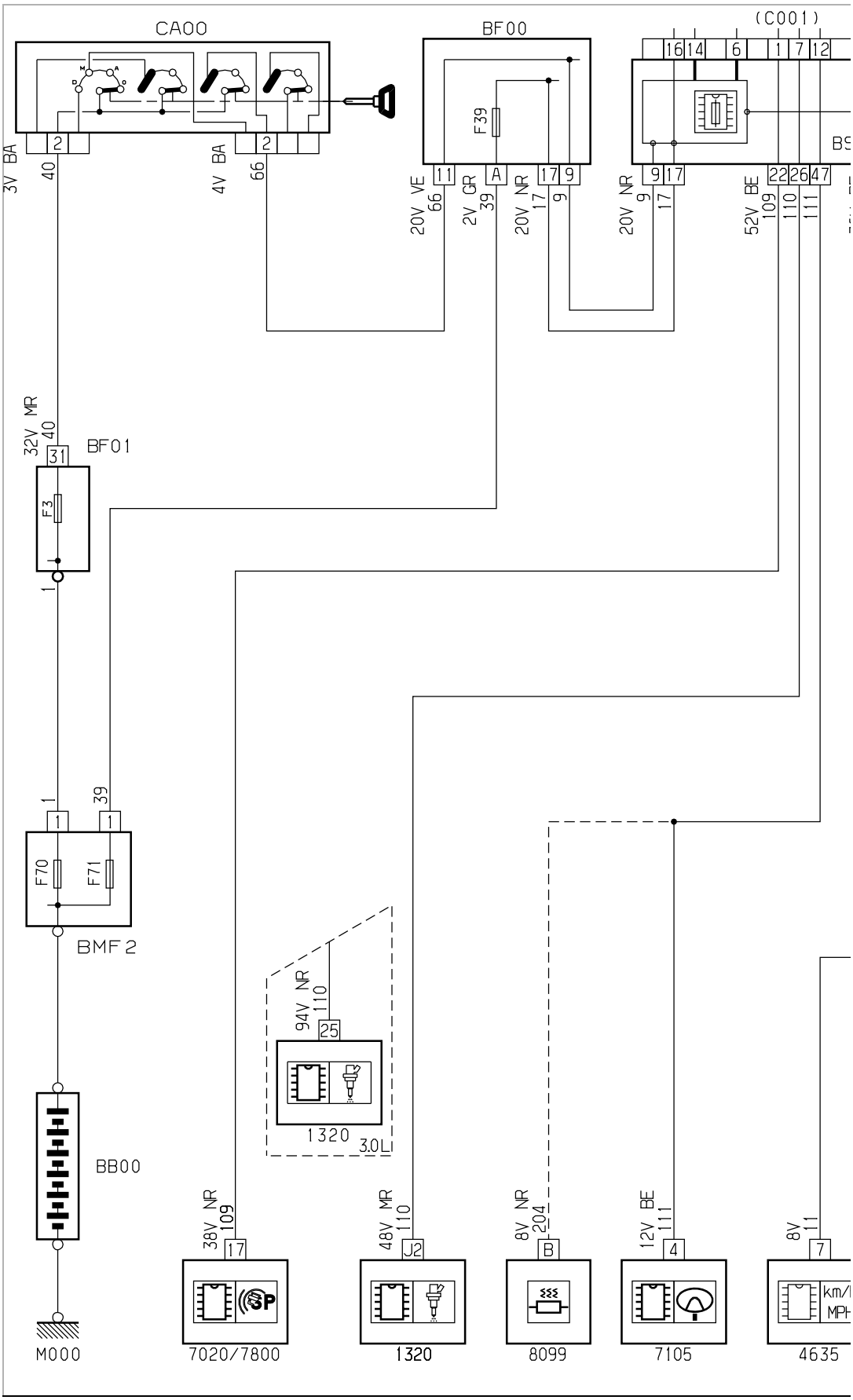

fig. d3cziuar

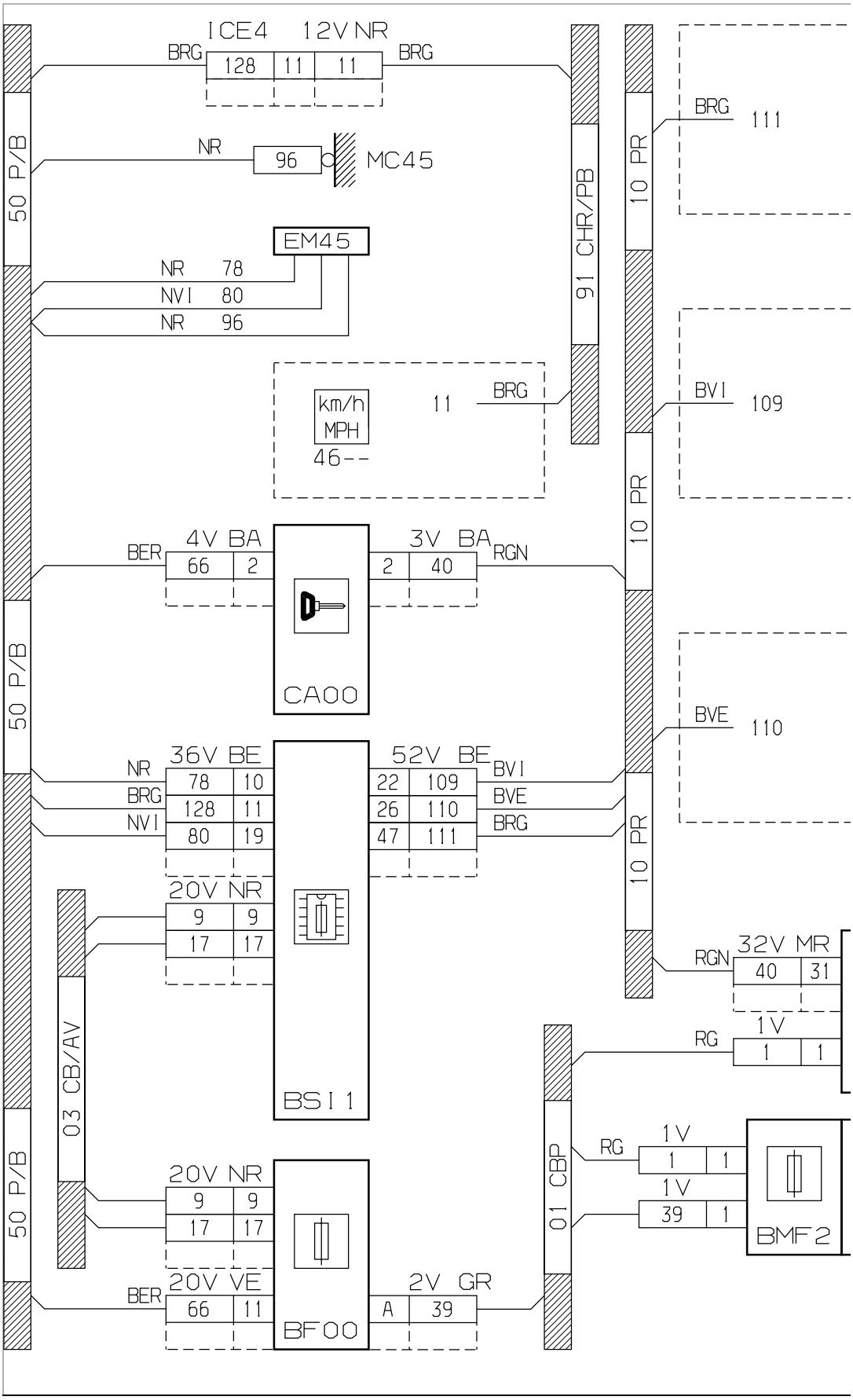

fig. d3cziuag

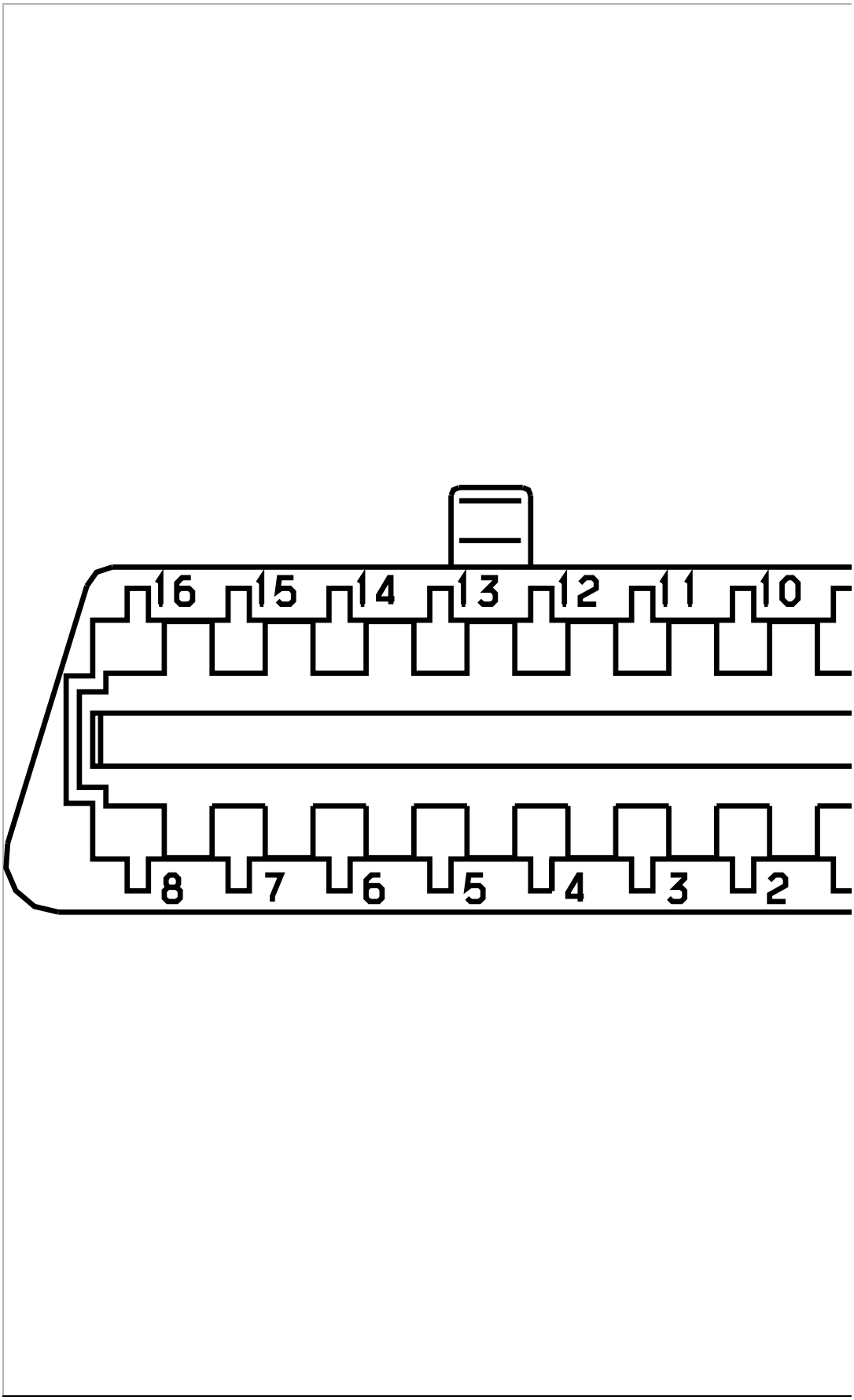

fig. prdiagu9

diagnostic socket

channel	matching
1	diagnosis of line K . ABS - ESP
2	C - CAN H
3	diagnosis of line K
4	earth
5	earth
6	B - CAN B
7	engine ECU . ISO bus line K
8	unused
9	diagnosis of line K
10	C - CAN L
11	unused
12	diagnosis of line K
13	diagnosis of line K
14	B - CAN A
15	unused
16	battery +

Vehicle

JUMPER

Data

New

Domain

Lighting - Signalling

Function

Dipped Beam / Main Beam Headlamps

Function Diagram

Principle

Wiring

Installation

9C- 06/10/2013

SVG Viewer

Tools

History

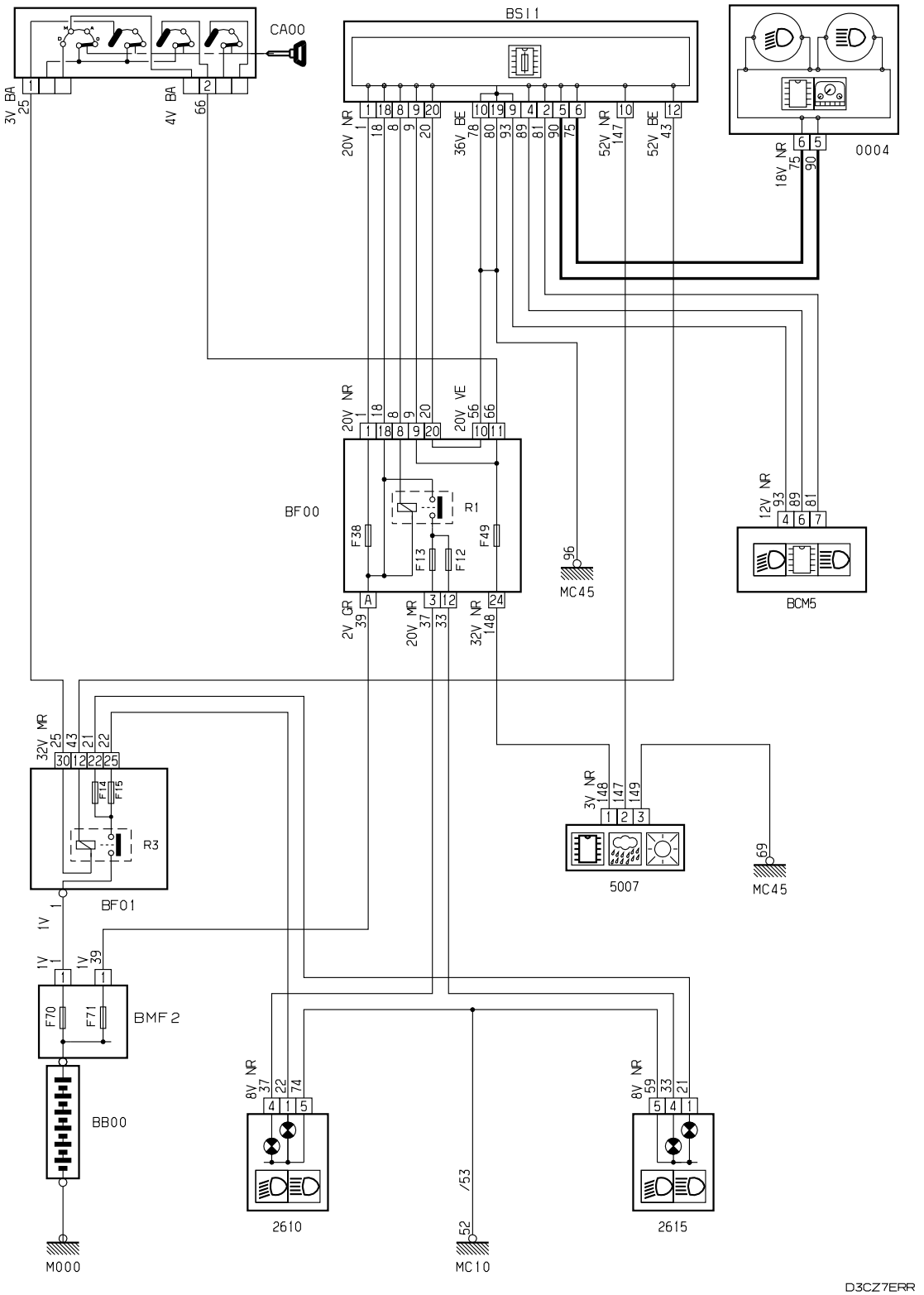

Vehicle

JUMPER

Data

New

Domain

Lighting - Signalling

Function

Direction Indicators / Side Repeaters / Hazard Warning Lamps

Function Diagram

Principle

Wiring

Installation

9C- 06/10/2013

SVG Viewer

Tools

History

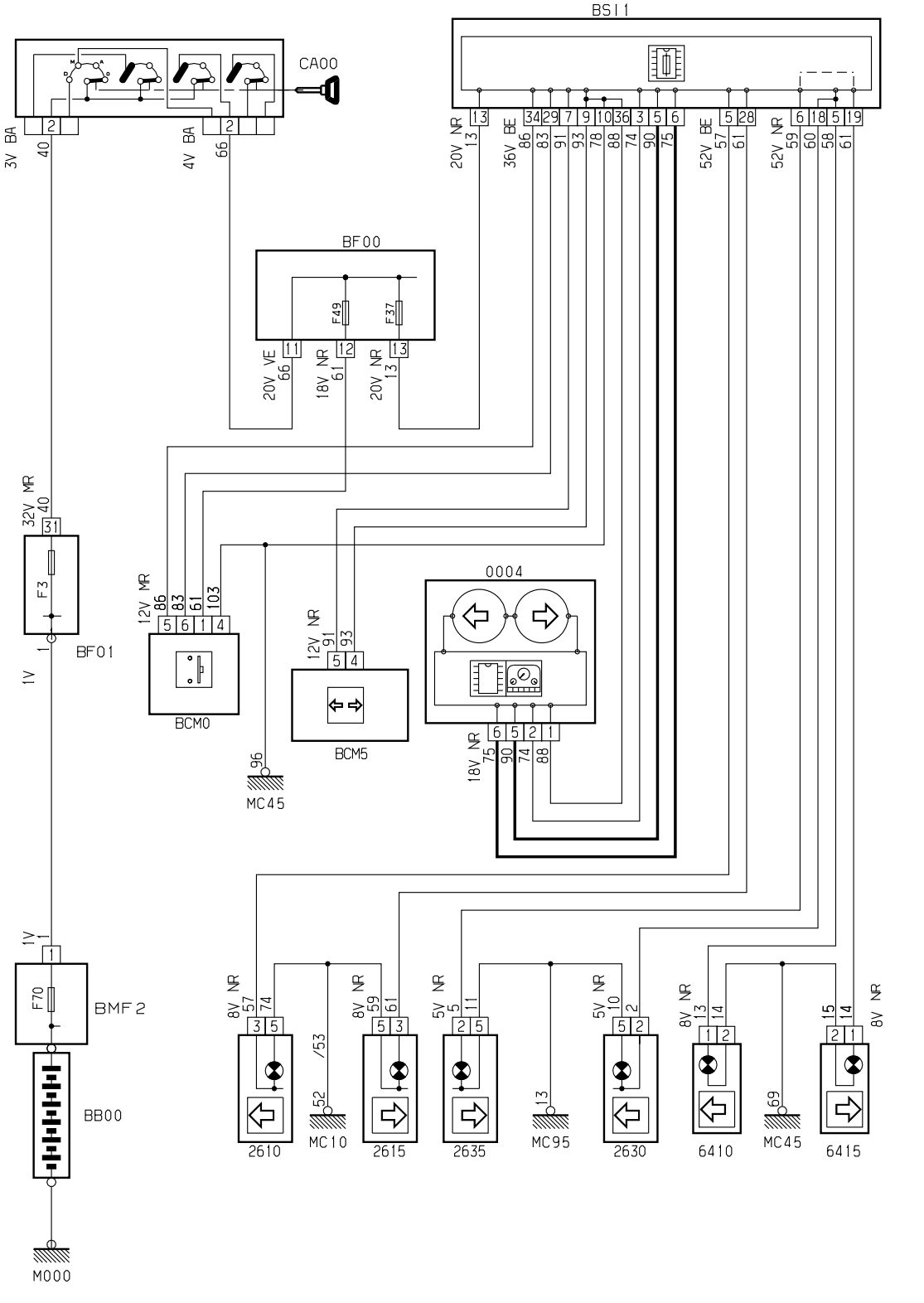

Vehicle

JUMPER

Data

New

Domain

General Points

Function

Diagnostic Socket

Function Diagram

General

9C- 06/10/2013

SVG Viewer

Tools

History

U9DIAG01	DIAGNOSTIC SOCKET

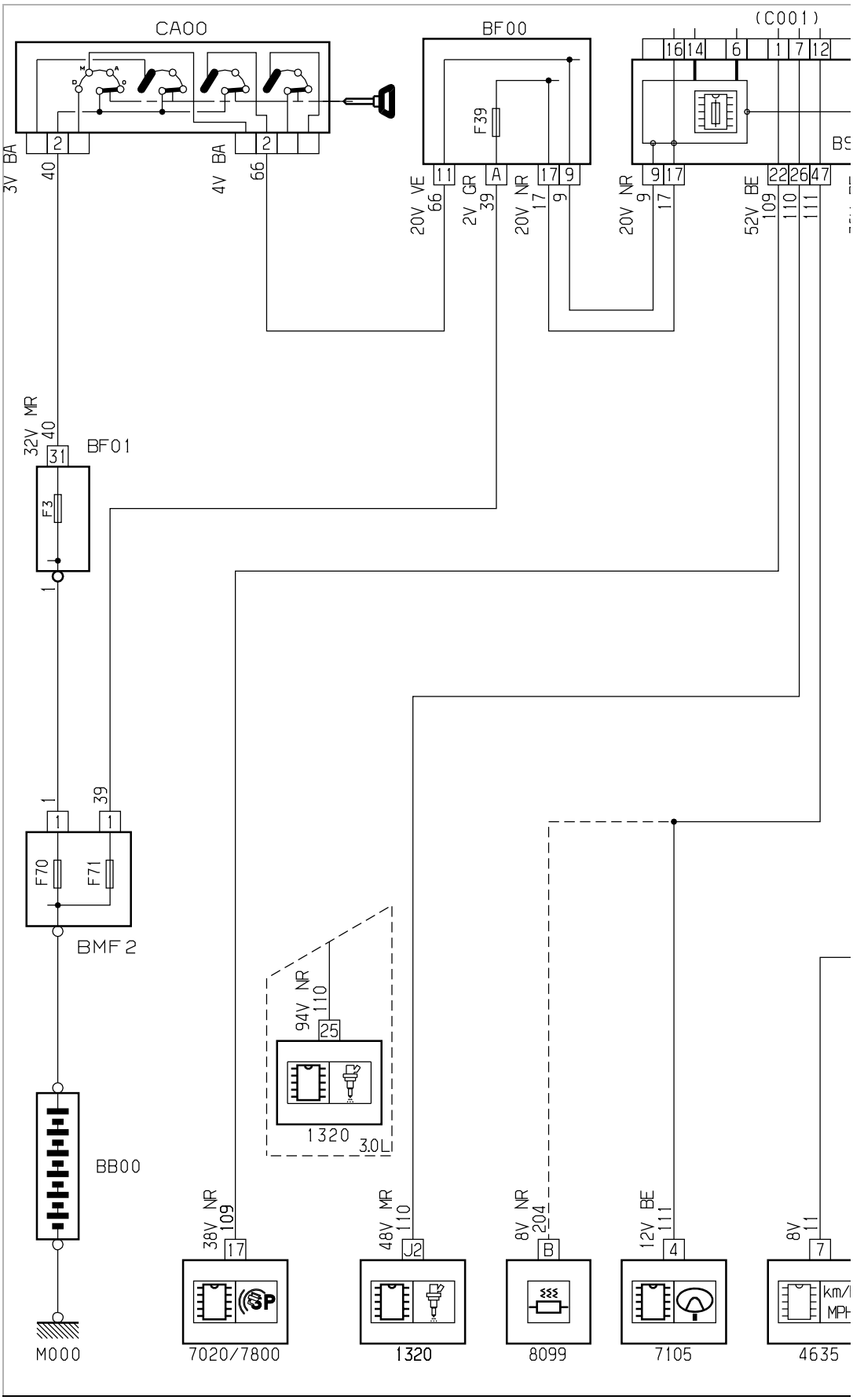

fig. d3cziuar

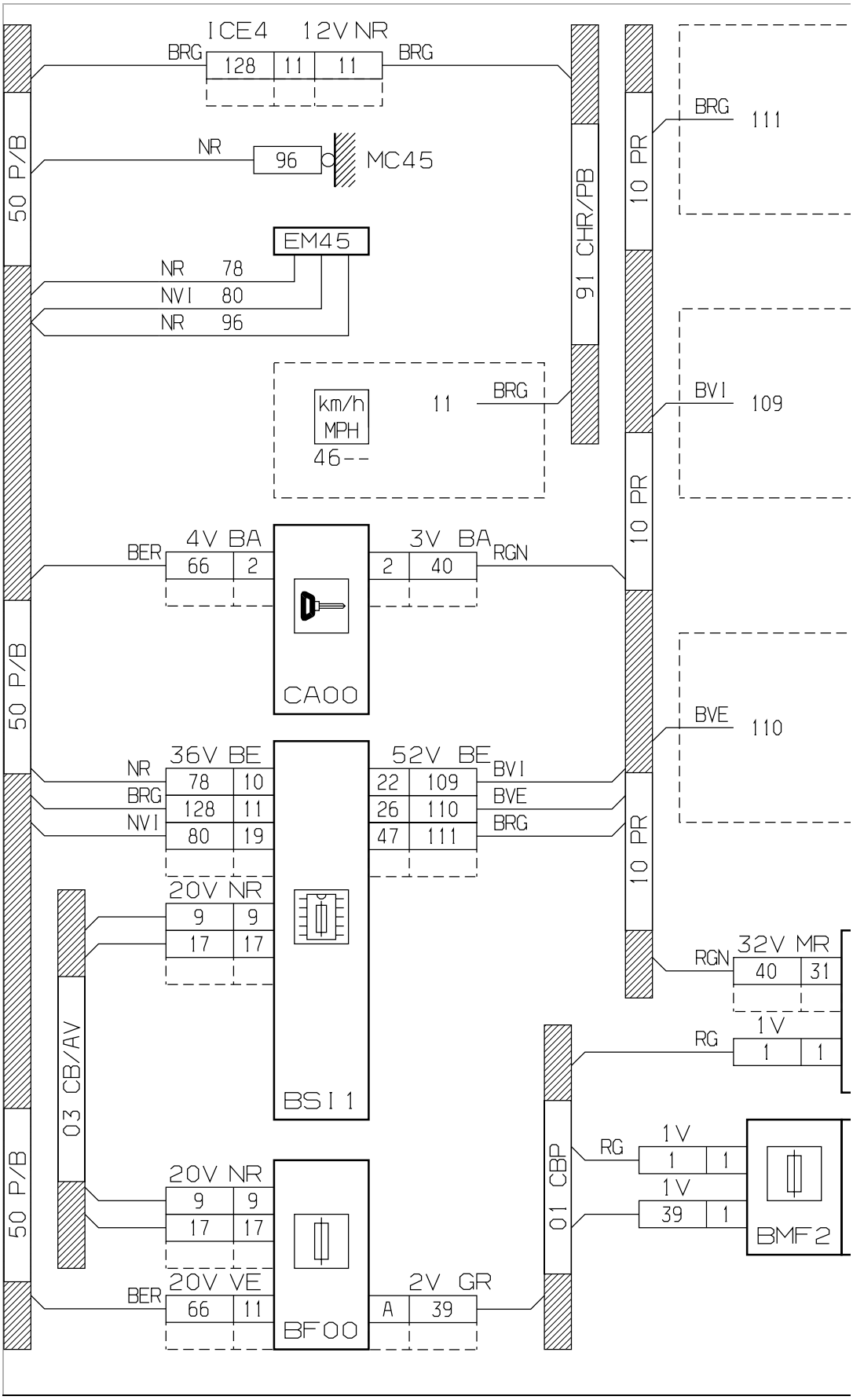

fig. d3cziuag

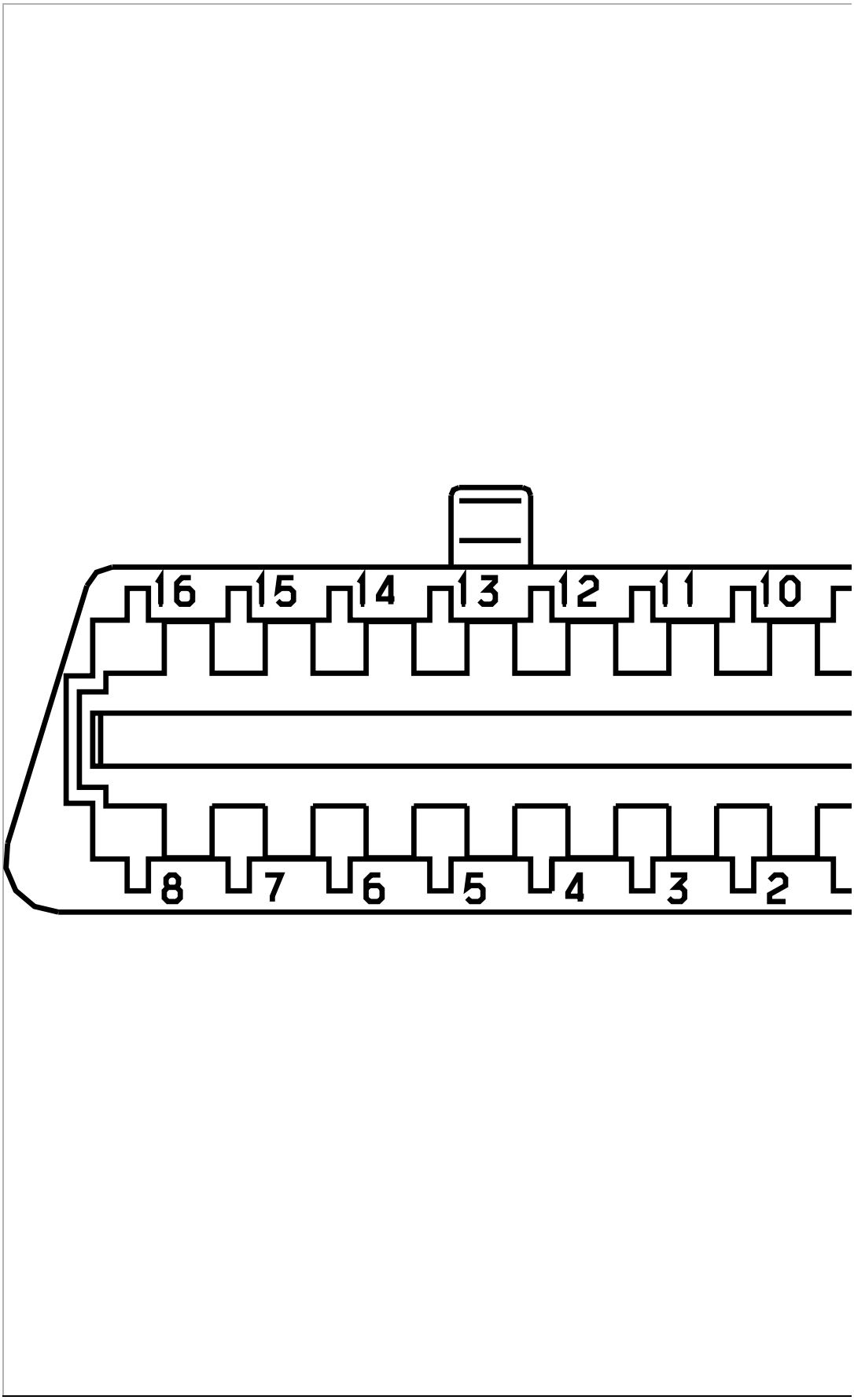

fig. prdiagu9

diagnostic socket

channel	matching
1	diagnosis of line K . ABS - ESP
2	C - CAN H
3	diagnosis of line K
4	earth
5	earth
6	B - CAN B
7	engine ECU . ISO bus line K
8	unused
9	diagnosis of line K
10	C - CAN L
11	unused
12	diagnosis of line K
13	diagnosis of line K
14	B - CAN A
15	unused
16	battery +

Vehicle

JUMPER

Data

New

Domain

Power Unit

Function

Electronic Injection

Function Diagram

Principle

Wiring

Installation

9C- 06/10/2013

SVG Viewer

Tools

History

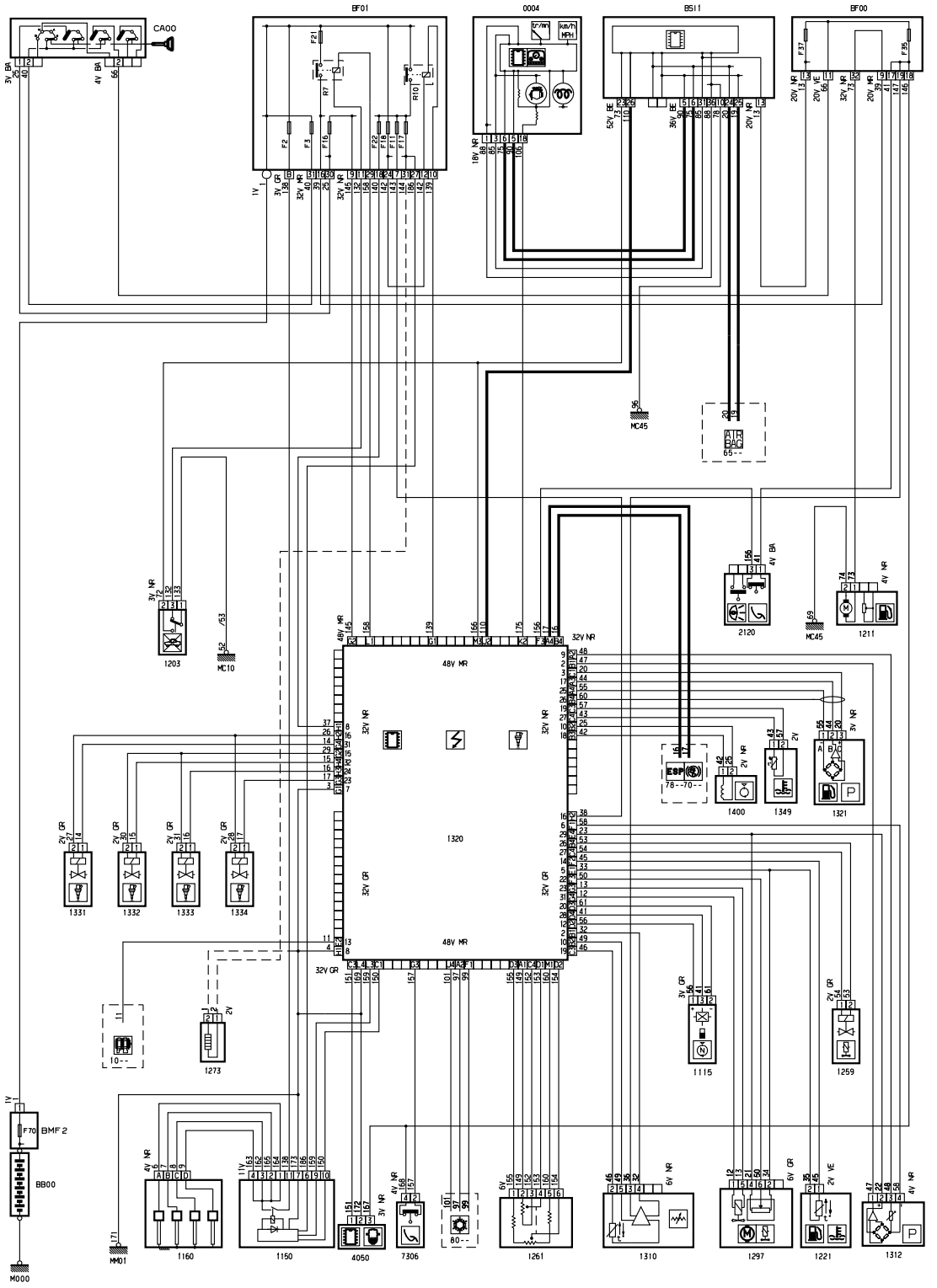

Vehicle

JUMPER

Data

New

Domain

Lighting - Signalling

Function

Height Correctors And Headlamp Correctors

Function Diagram

Principle

Wiring

Installation

9C- 06/10/2013

SVG Viewer

Tools

History

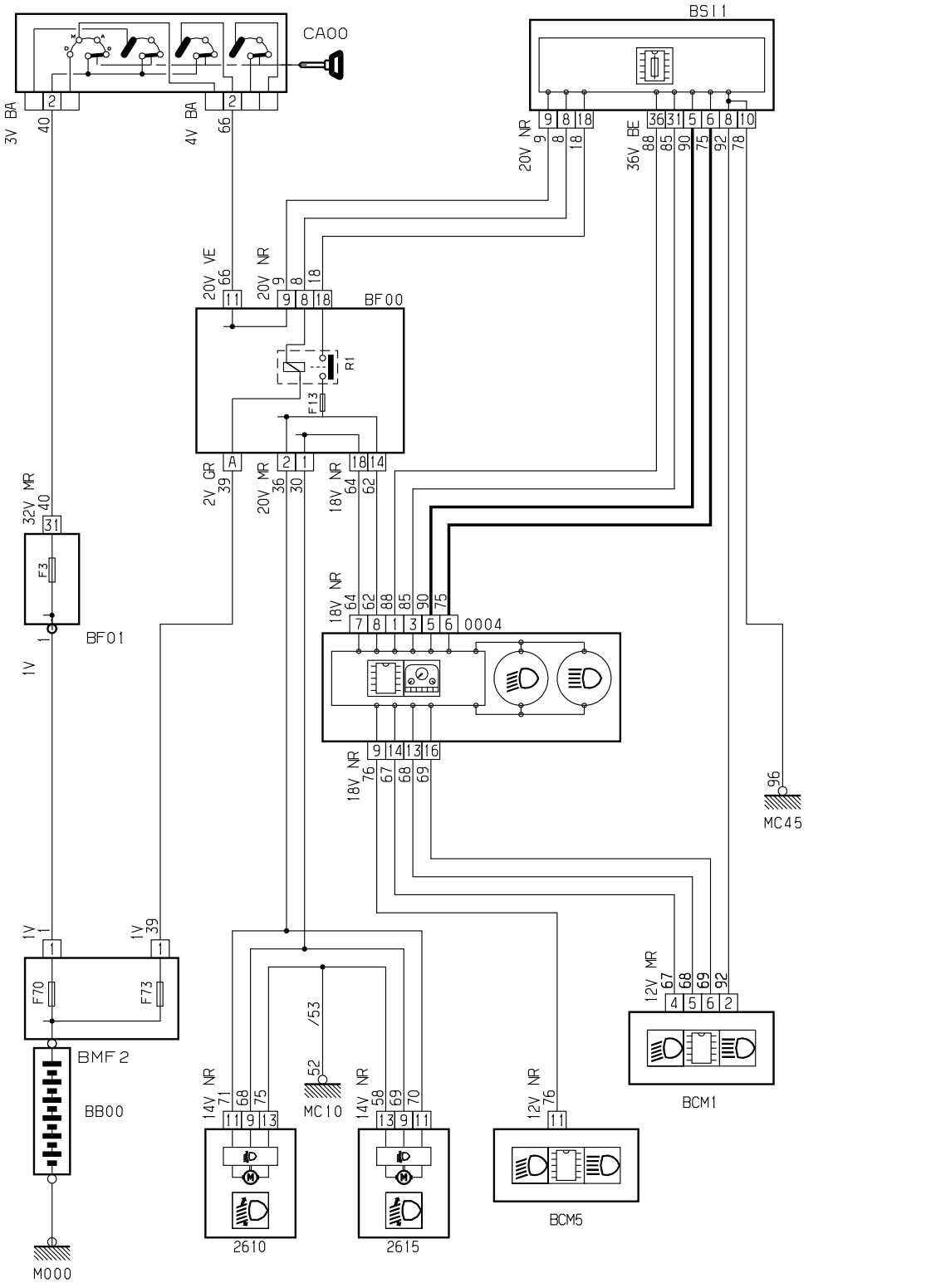

Vehicle

JUMPER

Data

New

Domain

General Points

Function

Interconnections Management

Function Diagram

General

9C- 06/10/2013

SVG Viewer

Tools

History

D3B0LUP0	INTERCONNECTIONS MANAGEMENT

IC01 interconnection : harnesses 10 PR - 50 PB (20V NR)

channel	wire no.	description	channel	wire no.	description
1			11		
2	20/72	steering wheel rotary connector	12		
3			13		
4	122/30	multifunction switch control	14	106/175	Engine management ECU
5	123/31	multifunction switch control	15		
6	63/85	inertia switch	16		
7			17		
8	66/22	control of front forward satellite sensor	18		
9	65/18	control of front forward satellite sensor	19		
10			20		

IC02 interconnection : harnesses 10 PR - 20 MOT (12V GR)

channel	wire no.	description	channel	wire no.	description
1	161/5	Starter motor control	7	1/170	engine management ECU supply
2	177/40/203	alternator excitation	8	6/164	Pre-heat plug 1 command
3	10/102	Air conditioning compressor control	9	7/165	Pre-heat plug 2 command
4	38/143	engine management ECU supply	10	8/162	Pre-heat plug 3 command
5	52/147	air flowmeter supply - reversing lamps	11	9/163	Pre-heat plug 4 command
6	148/39	reverse lamps supply	12	37/140	engine management ECU supply

IC08 interconnection : harnesses 10 PR - 16 GMV (2V)

channel	wire no.	description
1	181/14	fast speed relay control

2	182/19	slow speed relay control

IC16 interconnection : harnesses 10 PR - 71G AR/G (4V NR)		
channel	wire no.	description
1	83/11	rear LH ABS sensor
2	80/10	rear LH ABS sensor
3	84/13	rear RH ABS sensor
4	81/12	rear RH ABS sensor

IC26A interconnection : harnesses 10 PR - 59 CLM (6V NR)		
channel	wire no.	description
1	38/40/50	air conditioning control
2	96/41	air conditioning control
3	29/78	air conditioning motor control
4	186/76	air conditioning heater matrix relay control
5	100/48	air conditioning relay control
6	103/35	air conditioning control

IC26B interconnection : harnesses 10 PR - 59 CLM (2V)		
channel	wire no.	description
1	197/77	air conditioning heater matrix relay control - additional heating
2		

IC91 interconnection : harnesses 50 P/B - 46 HAB (12V GR)					
channel	wire no.	description	channel	wire no.	description
1			7		
2	107/105	audio system	8		
3	95/106	audio system	9		
4	108/107	audio system	10	124/116	Radiotelephone transceiver
5	109/108	audio system	11	125/117	Radiotelephone transceiver
6	139/158	video screen supply	12		

IC98A interconnection : harnesses 50 P/B - 65 P/P (2V)		
channel	wire no.	description
1	4/110	radio supply
2		

IC98B interconnection : harnesses 50 P/B - 65 P/P (2V)		
channel	wire no.	description
1	117/6	rear view mirror aerial information
2	118/7	rear view mirror aerial information

IC98C interconnection : harnesses 50 P/B - 65 P/P (2V)		
channel	wire no.	description

1	114/8	aerial supply control
2	115/9	aerial supply control

IC98D interconnection : harnesses 50 P/B - 65 P/P (2V)		
channel	wire no.	description
1	3/27	rear view mirror aerial supply
2		

ICE4 interconnection : harnesses 50 P/B - 91 CHR/PB (12V NR)					
channel	wire no.	description	channel	wire no.	description
1	127/1	electronic tachograph converter	7	140/12	video screen supply
2	129/2	electronic tachograph converter	8	137/13	video screen supply
3	126/3	electronic tachograph converter	9	138/14	video screen supply
4			10	139/15	video screen supply
5	131/7	electronic tachograph converter	11		
6	132/10	electronic tachograph converter	12		

ICE5 interconnection : harnesses 91 CHR/PB - 90 CHR/MT (4V BA)		
channel	wire no.	description
1	1/4	vehicle speed information
2	2/5	vehicle speed information
3	3/8	vehicle speed information
4	4/9	vehicle speed information

ICH1A interconnection : harnesses 71D AR/D - 63 PARG/B (6V BA)		
channel	wire no.	description
1		
2		
3	29/2	control of all doors
4		
5		
6		

ICH1B interconnection : harnesses 71D AR/D - 63 PARG/B (2V NR)		
channel	wire no.	description
1	7/39	RH heated rear screen supply
2	6/37	earth

ICJ5A interconnection : harnesses 46 HAC - 46 HAB (24V)					
channel	wire no.	description	channel	wire no.	description
1			13		
2			14		
3			15		

4			16		
5	142/46	obstacle detection control supply	17		
6	143/45	obstacle detection control supply	18		
7			19		
8			20	144/44	obstacle detection control supply
9			21		
10	65/132	LH heated rear screen supply	22		
11	64/131	RH heated rear screen supply	23		
12			24		

ICM4A interconnection : harnesses 46 HAC - 71D AR/D (6V NR)		
channel	wire no.	description
1	142/46	obstacle detection control supply
2	143/45	obstacle detection control supply
3	65/38	LH heated rear screen supply
4	64/39	RH heated rear screen supply
5		
6	144/44	obstacle detection control supply

ICP3 interconnection : harnesses 10 PR - 98 CLA (4V NR)		
channel	wire no.	description
1	198/2	fuel pump supply - inertia switch
2	1/199	additional/autonomous heating burner
3	3/191	additional/autonomous heating burner
4	4/195	control of alternator

ICT2 interconnection : harnesses 10 PR - 17 BR/AV/D (2V NR)		
channel	wire no.	description
1	120/1	supply of front RH sidelamp - front RH foglamp supply
2	131/2	earth

ICT3 interconnection : harnesses 10 PR - 17 BR/AV/G (2V NR)		
channel	wire no.	description
1	128/1	front LH sidelamp supply - front LH foglamp supply
2	129/2	earth

ICV6 interconnection : harnesses 46 HAB - 71G AR/G (24V)					
channel	wire no.	description	channel	wire no.	description
1	109/1	rear LH sidelamp supply	13		

2	59/5	rear LH direction indicator lamp supply	14	43/7	reverse lamps supply (cab)
3	68/8	RH stoplamp supply (cab)	15		
4			16		
5	110/9	rear RH sidelamp supply	17	113/2	number plate lamps supply
6			18	60/3	rear RH direction indicator lamp supply (cab)
7			19	67/4	LH stoplamp supply (cab)
8			20	66/6	rear foglamps supply
9			21		
10			22		
11			23		
12			24		

ICV7 interconnection : harnesses 46 HAB - 71D AR/D (24V)

channel	wire no.	description	channel	wire no.	description
1	9/109	rear RH sidelamp supply	13		
2			14	20/78	rear interior lamp control
3	65/08	RH stoplamp supply	15	19/68	exterior boot opening switch information
4	63/11	rear foglamps supply	16		
5	25/110	number plate lamps supply - earth	17	113/7	rear LH sidelamp supply
6	42/13	third stoplamp supply	18		
7			19	67/6	LH stoplamp supply
8	41/139	socket lighting supply (van)	20	66/4	rear LH sidelamp supply
9	42/138	socket supply (van)	21	115/3	LH reversing lamp supply
10			22		
11			23		
12			24	43/50	RH reversing lamp supply - rear obstacle detection signal

ICW2 interconnection : harnesses 71 ARC - 71D AR/D (6V BA)

channel	wire no.	description
1		
2		
3	26/8	RH sliding side door switch
4		
5		
6		

ICW3A interconnection : harnesses 71D AR/D - 61 PARG/B (2V)

channel	wire no.	description
1	25/5	number plate lamps supply
2	21/6	earth

ICW3B interconnection : harnesses 71D AR/D - 61 PARG/B (2V NR)		
channel	wire no.	description
1	7/38	LH heated rear screen supply
2	8/40	earth

ICW4 interconnection : harnesses 97 DEP - 71D AR/D (2V)		
channel	wire no.	description
1	7/49	rear obstacle detection signal - earth
2	8/51	obstacle detection control supply

ICW5A interconnection : harnesses 71 AR/G - 32 SUSP (2V NR)		
channel	wire no.	description
A	26/12	suspension control unit (power)
B	19/13	suspension ECU earth (power)

ICW5B interconnection : harnesses 71 AR/G - 32 SUSP (12V GR)					
channel	wire no.	description	channel	wire no.	description
1			7		
2	25/14	suspension control unit (control)	8	21/3	suspension descent signal
3	27/11	suspension ECU earth (control)	9	22/6	suspension descent led control
4	28/15	BUS CAN B	10	23/8	suspension ascent signal
5	29/16	BUS CAN A	11	24/5	suspension ascent led control
6			12		

ICW6 interconnection : harnesses 71G AR/G - 00 DIV1 (12V NR)					
channel	wire no.	description	channel	wire no.	description
1			7	8/6	LH stoplamp supply (cab)
2	2/1	rear LH sidelamp supply	8		
3	1/4	rear RH sidelamp supply	9	6/17	rear foglamps supply
4	2/3	rear LH direction indicator lamp supply (cab)	10		
5	5/5	rear RH direction indicator lamp supply (cab)	11	9/14	number plate lamps supply
6	4/3	RH stoplamp supply (cab)	12	7/18	reverse lamps supply (cab)

ICW8 interconnection : harnesses 97 DEP - 71D AR/D (2V)		
channel	wire no.	description
1	7/2	rear obstacle detection signal - earth
2	8/1	obstacle detection control supply

ICW9 interconnection : harnesses 97 DEP - 80 AR/SP (6V NR)		
channel	wire no.	description
1	1/9	rear obstacle detection sensor signal
2	2/10	rear obstacle detection sensor signal
3	3/11	rear obstacle detection sensor signal
4	4/12	rear obstacle detection sensor information (-)
5	5/13	rear obstacle detection sensor signal
6	6/1	rear obstacle detection sensor information (+)

Vehicle

JUMPER

Data

New

Domain

General Points

Function

Management Of Splices

Function Diagram

General

9C- 06/10/2013

SVG Viewer

Tools

History

D3B0LTP0	MANAGEMENT OF SPLICES

harness 00 DIV1

splice	wire no.	connection 1	instrument reference	connection 2	instrument reference
E344	14	built-in systems interface	BSI1	E344	
-	9	E344		number plate right-hand lamp	2633
-	7	E344		number plate lamp	2636
-					
EM95	13	earth	MC95	EM95	
-	10	EM95		left-hand tail lamp	2630
-	8	EM95		number plate right-hand lamp	2633
-	11	EM95		right-hand tail lamp	2635
-	12	EM95		number plate lamp	2636

harness 10 PR

splice	wire no.	connection 1	instrument reference	connection 2	instrument reference
E100	146	passenger compartment fuse box	BF00	E100	
-	167	E100		water in fuel sensor	4050
-	168	E100		cruise control safety switch (clutch)	7306
-					
E111	30	passenger compartment fuse box	BF00	E111	
-	68	E111		Left hand headlamp	2610
-	69	E111		Right hand headlamp	2615
-					
E112	36	passenger compartment fuse box	BF00	E112	
-	70	E112		Right hand headlamp	2615
-	71	E112		Left hand headlamp	2610
-					

E113	73	built-in systems interface	BSI1	E113	
-	72	E113		inertia switch	1203
-	85	E113		passenger compartment fuse box	BF00
-	166	E113		Engine management ECU	1320
-					
E114	95	built-in systems interface	BSI1	E114	
-	91	E114		variable power steering ECU	7105
-	94	E114		anti-lock brake control unit	7020
-	94	E114		ESP ECU	7800
-					
E117	179	engine compartment fuse box	BF01	E117	
-	180	E117		Engine management ECU	1320
-					
E118	187	built-in systems interface	BSI1	E118	
-	195	E118		outside air thermistor	8032
-	203	E118		alternator	1020
-					
E119	32	passenger compartment fuse box	BF00	E119	
-	41	E119		stoplamp switch	2100
-	79	E119		anti-lock brake control unit	7020
-	79	E119		ESP ECU	7800
-	121	E119		ESP flywheel angle sensor	7803
-	124	E119		ESP accelerometer gyroscope	7804

harness 10 PR (continued)					
splice	wire no.	connection 1	instrument reference	connection 2	instrument reference
E120	35	passenger compartment fuse box	BF00	E120	
-	82	E120		anti-lock brake control unit	7020
-	82	E120		ESP ECU	7800
-	174	E120		Engine management ECU	1320

-					
E121	185	engine compartment fuse box	BF01	E121	
-	193	E121		inertia switch	1203
-	198	E121		additional heating fuel pump	8093
-					
E122	20	built-in systems interface	BSI1	E122	
-	201	E122		additional heating control panel	8088
-					
EM02	171	earth	MM01	EM02	
-	169	EM02		Engine management ECU	1320
-	170	EM02		EM02A (20 MOT)	
-	172	EM02		water in fuel sensor	4050
-	173	EM02		heater unit	1150
-					
EM03	52	earth	MC10	EM03	
-	23	EM03		engine compartment fuse box	BF01
-	74	EM03		Left hand headlamp	2610
-	75	EM03		Left hand headlamp	2610
-	76	EM03		horns	2520
-	125	EM03		ESP accelerometer gyroscope	7804
-	126	EM03		ESP flywheel angle sensor	7803
-	129	EM03		left-hand front fog lamp	2670
-	133	EM03		inertia switch	1203
-	137	EM03		headlamp wash pump	5405
-	192	EM03		inertia switch	1203
-					
EM04	53	earth	MC10	EM04	
-	1	EM04		anti-theft alarm system bonnet switch	8611
-	5	EM04		alarm siren	8605
-	58	EM04		Right hand headlamp	2615
-	59	EM04		Right hand headlamp	2615
-	64	EM04		brake fluid level switch	4410
-	67	EM04		engine coolant level switch	4010
-	77	EM04		windscreen wiper motor	5015
-	78	EM04		windscreen wash pump	5100
-	91	EM04		variable power steering ECU	7105
-	131	EM04		right-hand front fog lamp	2675

-	188	EM04		additional heating control panel	8088
-	196	EM04		additional/autonomous heating burner	8099

harness 16 GMV					
splice	wire no.	connection 1	instrument reference	connection 2	instrument reference
E160	12	high speed fan supply relay	1509	E160	
-	11	E160		cooling fan 2-speed resistance	1506
-	13	E160		left-hand fan	1512
-					
EB07	10	engine compartment fuse box	BF01	EB07	
-	7	EB07		high speed fan supply relay	1509
-	8	EB07		cooling fan 2-speed resistance	1506
-	9	EB07		high speed fan supply relay	1509

harness 20 MOT (2.2 HDI)					
splice	wire no.	connection 1	instrument reference	connection 2	instrument reference
E100A	52	passenger compartment fuse box	BF00	E100A	
-	36	E100A		air flowmeter	1310
-	51	E100A		reverse lamp switch	2200
-					
E102	26	Engine management ECU	1320	E102	
-	27	E102		Injector cylinder 1	1331
-	28	E102		Injector cylinder 4	1334
-					
E103	29	Engine management ECU	1320	E103	
-	30	E103		Injector cylinder 2	1332
-	31	E103		Injector cylinder 3	1333
-					
E104	23	Engine management ECU	1320	E104	
-	21	E104		electric EGR electrovalve	1297

-	22	E104		Inlet air pressure sensor	1312
-					
E105	33	Engine management ECU	1320	E105	
-	34	E105		electric EGR electrovalve	1297
-	35	E105		diesel fuel temperature sensor	1221
-					
EM02A	1	EM02 (10 PR)		EM02A	
-	3	EM02A		Engine management ECU	1320
-	4	EM02A		Engine management ECU	1320

harness 46 HAB					
splice	wire no.	connection 1	instrument reference	connection 2	instrument reference
E140	119	central locking control unit	6235	E140	
-	120	E140		driver´s door lock assembly	6202
-	121	E140		passenger´s door lock assembly	6207
-					
E141	159	passenger compartment fuse box	BF00	E141	
-	157	E141		left-hand tail lamp	2630
-	158	E141		parking assistance video screen	7522
-					
E142	45	passenger compartment fuse box	BF00	E142	
-	77	E142		roof console + integrated functions	3015
-	78	E142		E142A (71D AR/D)	
-					
E143	125	passenger compartment fuse box	BF00	E143	
-	126	E143		Passenger's door mirror	6415
-	130	E143		RH rear heated window	8119
-					

E144	41	passenger compartment fuse box	BF00	E144	
-	79	E144		E144A (60 P/C)	
-	99	E144		passenger´s electric window switch	6004
-					
E145	127	passenger compartment fuse box	BF00	E145	
-	128	E145		LH rear heated window	8118
-	129	E145		driver´s side rear view mirror	6410
-					
E146	81	central locking control unit	6235	E146	
-	114	E146		rear RH hinged door lock assembly	6218
-	80	E146		E146A (71 AR C)	
-					
E147	33	built-in systems interface	BSI1	E147	
-	32	E147		rain/sunlight sensor	5007
-	34	E147		anti-lift switch	8618
-					
E148	107	audio system	8410	E148	
-	71	E148		front LH tweeter speaker	8440
-	96	E148		driver´s front door speaker	8420
-					
E149	108	audio system	8410	E149	
-	97	E149		driver´s front door speaker	8420
-	72	E149		front LH tweeter speaker	8440
-					
E150	105	audio system	8410	E150	
-	88	E150		passenger´s front door speaker	8425
-	89	E150		front RH tweeter speaker	8445
-					
E151	106	audio system	8410	E151	
-	90	E151		front RH tweeter speaker	8445
-	104	E151		passenger´s front door speaker	8425

harness 46 HAB (continued)					
splice	wire no.	connection 1	instrument reference	connection 2	instrument reference
E152	142	built-in systems interface	BSI1	E152	
-	143	E152		parking assistance video screen	7522
-					
EM45A	69	earth	MC45B	EM45A	
-	30	EM45A		anti-lift switch	8618
-	74	EM45A		fuel gauge pump	1211
-	82	EM45A		EM45B (60 P/C)	
-	83	EM45A		EM45C (65 P/P)	
-	84	EM45A		central locking control unit	6235
-	85	EM45A		front LH electric window unit + motor	6052
-	86	EM45A		electric window/rear view mirror control panel on driver´s door	6036
-	87	EM45A		roof console + integrated functions	3015
-	100	EM45A		front RH electric window unit + motor	6051
-	103	EM45A		passenger´s electric window switch	6004
-	149	EM45A		rain/sunlight sensor	5007

harness 46 HAC					
splice	wire no.	connection 1	instrument reference	connection 2	instrument reference
E171	135	passenger compartment fusebox panel	PSF0	E171	
-	136	E171		driver´s heated seat	8310
-	138	E171		passenger´s heated seat	8315
-					
E172	86	passenger compartment fuse box	BF00	E172	
-	84	E172		RH multifunction switch block	BCM2
-	139	E172		driver´s heated seat	8310
-	140	E172		passenger´s heated seat	8315
-	145	E172		parking assistance ECU	7500

-					
E179	15	passenger compartment fuse box	BF00	E179	
-	16	E179		passenger compartment fusebox panel	PSF0
-	19	E179		passenger compartment fusebox panel	PSF0
-					
EM55	66	earth	MC55	EM55	
-	25	EM55		passenger compartment fusebox panel	PSF0
-	51	EM55		air conditioned central storage	8029
-	78	EM55		RH multifunction switch block	BCM2
-	81	EM55		RH multifunction switch block	BCM2
-	85	EM55		RH multifunction switch block	BCM2
-	137	EM55		passenger´s heated seat	8315
-	141	EM55		driver´s heated seat	8310

harness 50 P/B					
splice	wire no.	connection 1	instrument reference	connection 2	instrument reference
E200	38	passenger compartment fuse box	BF00	E200	
-	42	E200		Radiotelephone transceiver	8480
-	44	E200		mixed equipotential terminal 2	B002
-					
E201	45	passenger compartment fuse box	BF00	E201	
-	43	E201		mixed equipotential terminal 2	B002
-	46	E201		Radiotelephone transceiver	8480
-					
E202	79	intelligent slave unit	BSI1	E202	
-	60	E202		passenger compartment fuse box	BF00

-	94	E202		audio system	8410
-	98	E202		mixed equipotential terminal 2	CP01
-	100	E202		front cigar lighter	8100
-	126	E202		electronic tachograph converter	4635
-					
E203	135	intelligent slave unit	BSI1	E203	
-	136	E203		passenger compartment fuse box	BF00
-	137	E203		parking assistance video screen	7522
-					
E204	59	passenger compartment fuse box	BF00	E204	
-	97	E204		front cigar lighter	8100
-	101	E204		forward 12 V socket	CP01
-					
E205	47	passenger compartment fuse box	BF00	E205	
-	35	E205		audio system	8410
-	53	E205		steering wheel rotary connector	CT00
-	122	E205		Radiotelephone transceiver	8480
-					
E206	39	passenger compartment fuse box	BF00	E206	
-	40	E206		audio system	8410
-	41	E206		Radiotelephone transceiver	8480
-					
EM45	96	earth	MC45A	EM45	
-	49	EM45		steering wheel rotary connector	CT00
-	56	EM45		passenger compartment fuse box	BF00
-	78	EM45		intelligent slave unit	BSI1
-	80	EM45		intelligent slave unit	BSI1
-	99	EM45		forward 12 V socket	CP01
-	105	EM45		steering wheel rotary connector	CT00
-	102	EM45		audio system	8410
-	103	EM45		multifunction switch block	BCM0

-	104	EM45		front cigar lighter	8100
-	119	EM45		Radiotelephone transceiver	8480
-	131	EM45		electronic tachograph converter	4635
-	138	EM45		parking assistance video screen	7522

harness 59 CLM					
splice	wire no.	connection 1	instrument reference	connection 2	instrument reference
E230	34	air conditioning switch	8000	E230	
-	33	E230		blower speed rheostat	8040
-	37	E230		blower motor resistor (if separated)	8046
-	58	E230		blower motor resistor (if separated)	8046
-	59	E230		blower speed rheostat	8040
-	67	E230		Blower motor	8050
-					
E232	77	additional/autonomous heating burner	8099	E232	
-	70	E232		additional/autonomous heating control relay	8091
-	72	E232		heating/air conditioning unit relay	8061
-					
E233	75	engine compartment fuse box	BF01	E233	
-	73	E233		heating/air conditioning unit relay	8061
-	74	E233		Blower motor	8050
-					
E234	51	blower speed rheostat	8040	E234	
-	53	E234		blower motor resistor (if separated)	8046
-	54	E234		additional/autonomous heating control relay	8091
-	62	E234		additional/autonomous heating control relay	8091
-	65	E234		blower motor resistor (if separated)	8046
-	66	E234		blower speed rheostat	8040
-					
E235	40	passenger compartment fuse box	BF00	E235	

-	38	E235		air conditioning switch	8000
-	39	E235		heater control panel lamp	3051
-					
EM50	42/43	earth	MC50	EM50	
-	36	EM50		air conditioning switch	8000
-	44	EM50		blower speed rheostat	8040
-	61	EM50		heating/air conditioning unit relay	8061
-	64	EM50		additional/autonomous heating control relay	8091
-	68	EM50		heater control panel lamp	3051
-	69	EM50		additional/autonomous heating control relay	8091
-	71	EM50		heating/air conditioning unit relay	8061

harness 60 P/C

splice	wire no.	connection 1	instrument reference	connection 2	instrument reference
E144A	8	E144 (46 HAB)		E144A	
-	2	E144A		electric window/rear view mirror control panel on driver´s door	6036
-	34	E144A		electric window/rear view mirror control panel on driver´s door	6036
-	35	E144A		electric window/rear view mirror control panel on driver´s door	6036
-					
E190	36		6036	E190	
-	37	E190		driver´s side rear view mirror	6410
-	38	E190		Passenger's door mirror	6415
-					
EM45B	18	EM45A (46 HAB)		EM45B	
-	33	EM45B		electric window/rear view mirror control panel on driver´s door	6036
-	1	EM45B		electric window/rear view mirror control panel on driver´s door	6036
-	19	EM45B		driver´s door lock assembly	6202
-	14	EM45B		driver´s side rear view mirror	6410

harness 61 PARGB

splice	wire no.	connection 1	instrument reference	connection 2	instrument reference
E300	5	built-in systems interface	BSI1	E300	

-	1	E300		number plate right-hand lamp	2633
-	36	E300		number plate lamp	2636
-					
EM60A	6	EM60 (71D AR/D)		EM60A	
-	2	EM60A		number plate right-hand lamp	2633
-	4	EM60A		number plate lamp	2636

harness 65 P/P					
splice	wire no.	connection 1	instrument reference	connection 2	instrument reference
E310	24	electric window/rear view mirror control panel on driver´s door	6036	E310	
-	10	E310		passenger´s electric window switch	6004
-	19	E310		front RH electric window unit + motor	6051
-					
E311	23	electric window/rear view mirror control panel on driver´s door	6036	E311	
-	13	E311		passenger´s electric window switch	6004
-	17	E311		front RH electric window unit + motor	6051
-					
EM45C	18	EM45A (46 HAB)		EM45C	
-	15	EM45C		Passenger's door mirror	6415
-	16	EM45C		passenger´s door lock assembly	6207

harness 71D AR/D					
splice	wire no.	connection 1	instrument reference	connection 2	instrument reference
E142A	78	E142 (46 HAB)		E142A	
-	18	E142A		Rear interior lamp	3020
-					
E320	34	central locking control unit	6235	E320	
-	35	E320		rear RH hinged door lock assembly	6218
-	36	E320		rear central pretensioner	6579

-					
E330	50	passenger compartment fuse box	BF00	E330	
-	47	E330		right-hand tail lamp	2635
-	49	E330		parking assistance rear speaker	7504
-					
EM60	22	earth	MC60	EM60	
-	2	EM60		left-hand tail lamp	2630
-	17	EM60		Rear interior lamp	3020
-	21	EM60		EM60A (61 PARGB)	
-	40	EM60		LH rear heated window	8118
-					
EM70	1	earth	MC70	EM70	
-	12	EM70		right-hand tail lamp	2635
-	23	EM70		additional stop lamps	2110
-	24	EM70		rear RH hinged door lock assembly	6218
-	32	EM70		RH sliding side door switch	6279
-	43	EM70		rear 12 volt socket	CP00
-	48	EM70		parking assistance ECU	7500
-	51	EM70		parking assistance rear speaker	7504
-	37	EM70		RH rear heated window	8119
-	32	EM70		EM70A (71 AR C)	

harness 71G AR/G					
splice	wire no.	connection 1	instrument reference	connection 2	instrument reference
EM61	20	earth	MC61	EM61	
-	19	EM61		suspension control unit	7715
-	27	EM61		suspension control unit	7715

harness 71 AR C					
splice	wire no.	connection 1	instrument reference	connection 2	instrument reference
E146A	22	E146 (46 HAB)		E146A	
-	16	E146A		RH sliding side door switch	6279

-	20	E146A		LH sliding side door switch	6278
-					
E360	23	central locking control unit	6235	E360	
-	11	E360		LH sliding side door switch	6278
-	15	E360		RH sliding side door switch	6279
-					
E361	24	built-in systems interface	BSI1	E361	
-	12	E361		LH sliding side door switch	6278
-	17	E361		RH sliding side door switch	6279
-					
E362	21	central locking control unit	6235	E362	
-	13	E362		LH sliding side door switch	6278
-	18	E362		RH sliding side door switch	6279
-					
EM70A	25	EM70 (71D AR/D)		EM70A	
-	14	EM70A		LH sliding side door switch	6278
-	19	EM70A		RH sliding side door switch	6279

harness 80 AR/SP					
splice	wire no.	connection 1	instrument reference	connection 2	instrument reference
E370	1	parking assistance ECU	7500	E370	
-	2	E370		outer LH rear proximity sensor	7510
-	3	E370		inner RH rear proximity sensor	7513
-	4	E370		outer RH rear proximity sensor	7512
-	5	E370		inner LH rear proximity sensor	7511
-					
E371	12	parking assistance ECU	7500	E371	

-	6	E371		outer RH rear proximity sensor	7512
-	7	E371		outer LH rear proximity sensor	7510
-	8	E371		inner LH rear proximity sensor	7511
-	14	E371		inner RH rear proximity sensor	7513

Vehicle

JUMPER

Data

New

Domain

Washing And Wiping

Function

Screen Wipe/wash

Function Diagram

Principle

Wiring

Installation

9C- 06/10/2013

SVG Viewer

Tools

History

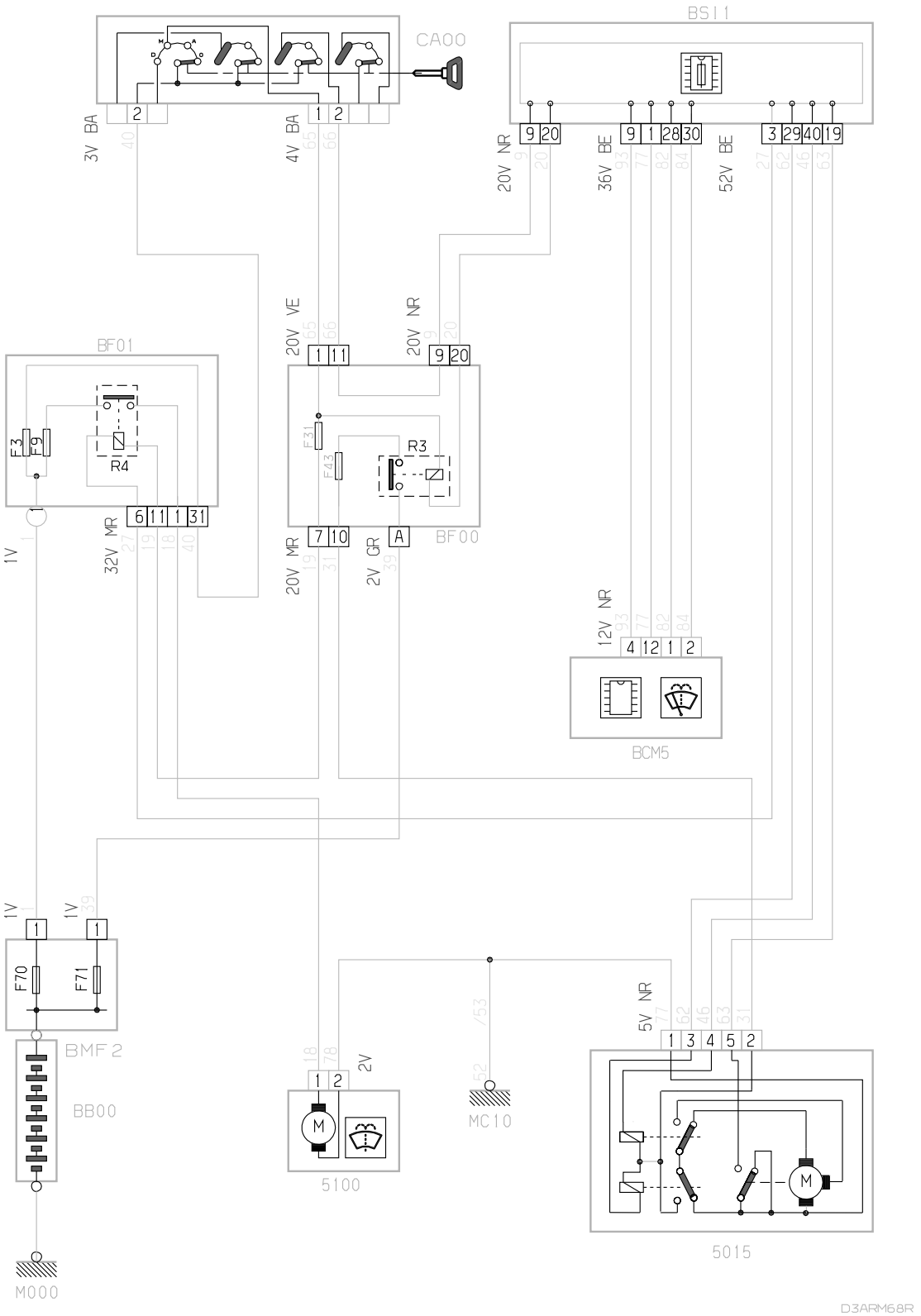

Vehicle

JUMPER

Data

New

Domain

Protections And Doors

Function

Seat Belts / Air Bags

Function Diagram

Principle

Principle

Wiring

Wiring

Installation

Installation

9C- 06/10/2013

SVG Viewer

Tools

History

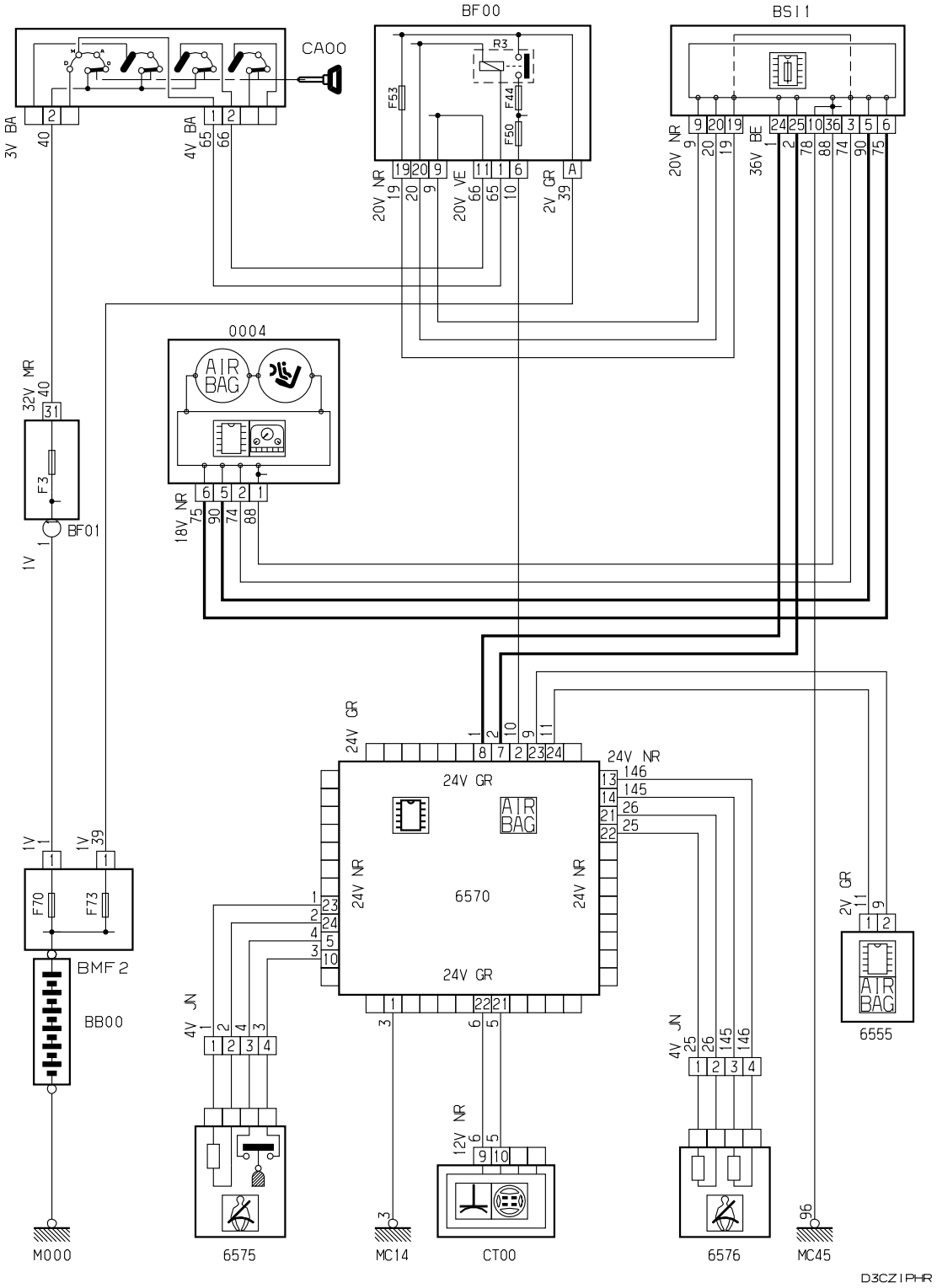

Vehicle

JUMPER

Data

New

Domain

Lighting - Signalling

Function

Sidelamps

Function Diagram

Principle

Wiring

Installation

9C- 06/10/2013

SVG Viewer

Tools

History

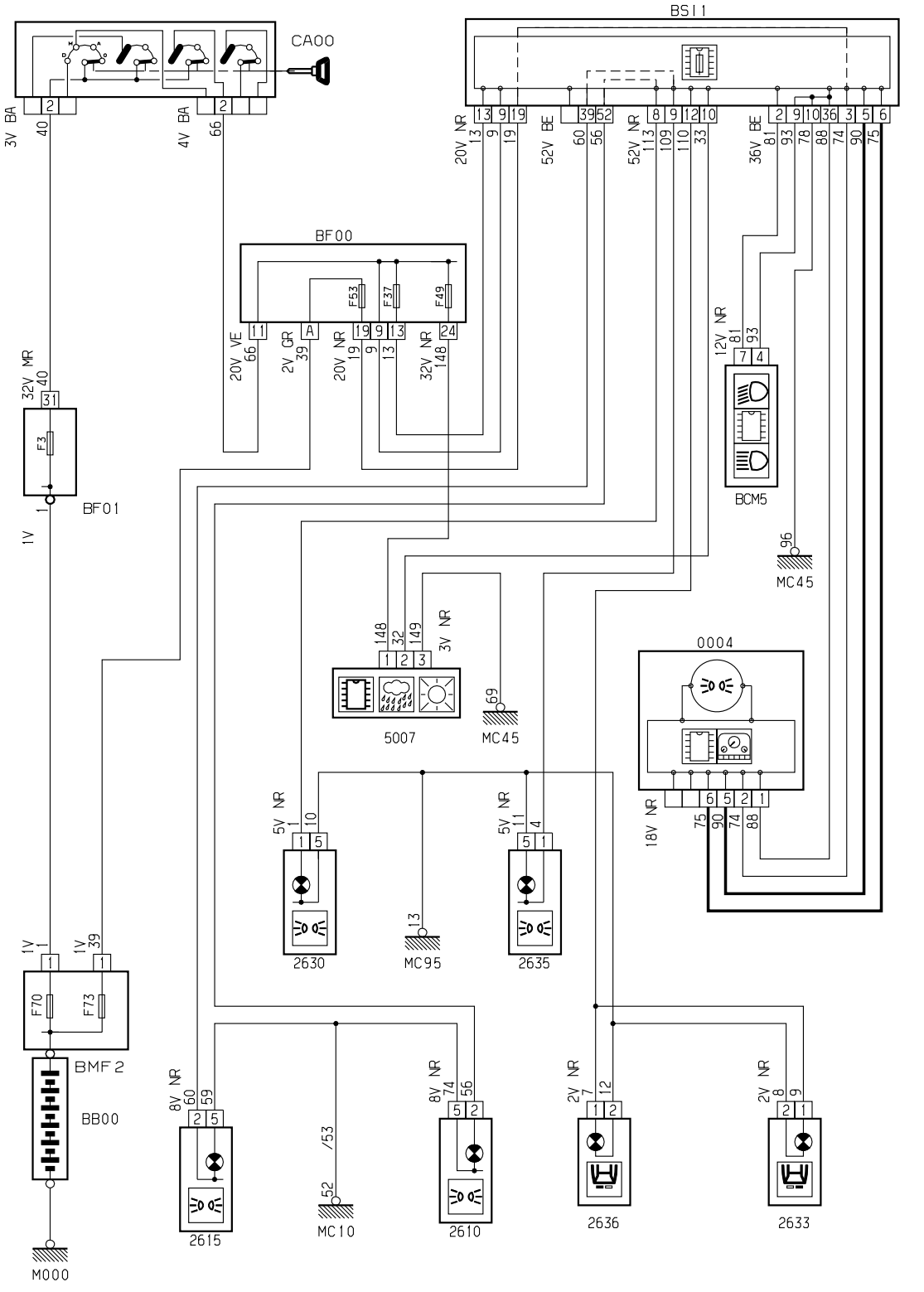

Vehicle

JUMPER

Data

New

Domain

Driver Information

Function

Tachograph

Function Diagram

Principle

Wiring

Installation

9C- 06/10/2013

SVG Viewer

Tools

History

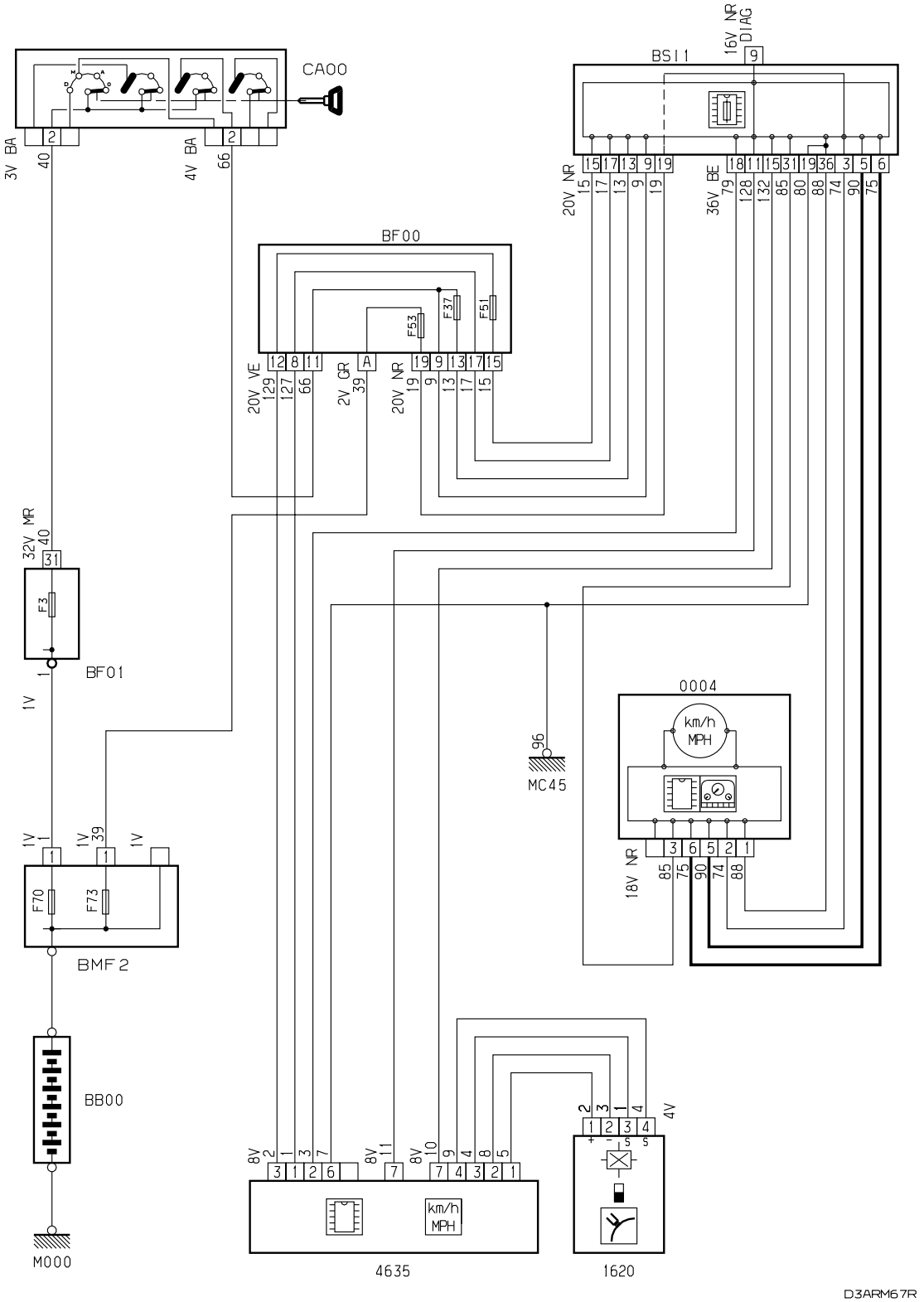

REMOVING - REFITTING : HINGED REAR DOOR GLASS

ESSENTIAL : Observe the safety and cleanliness recommendations.

1. Recommended tools

Glazing consumable .

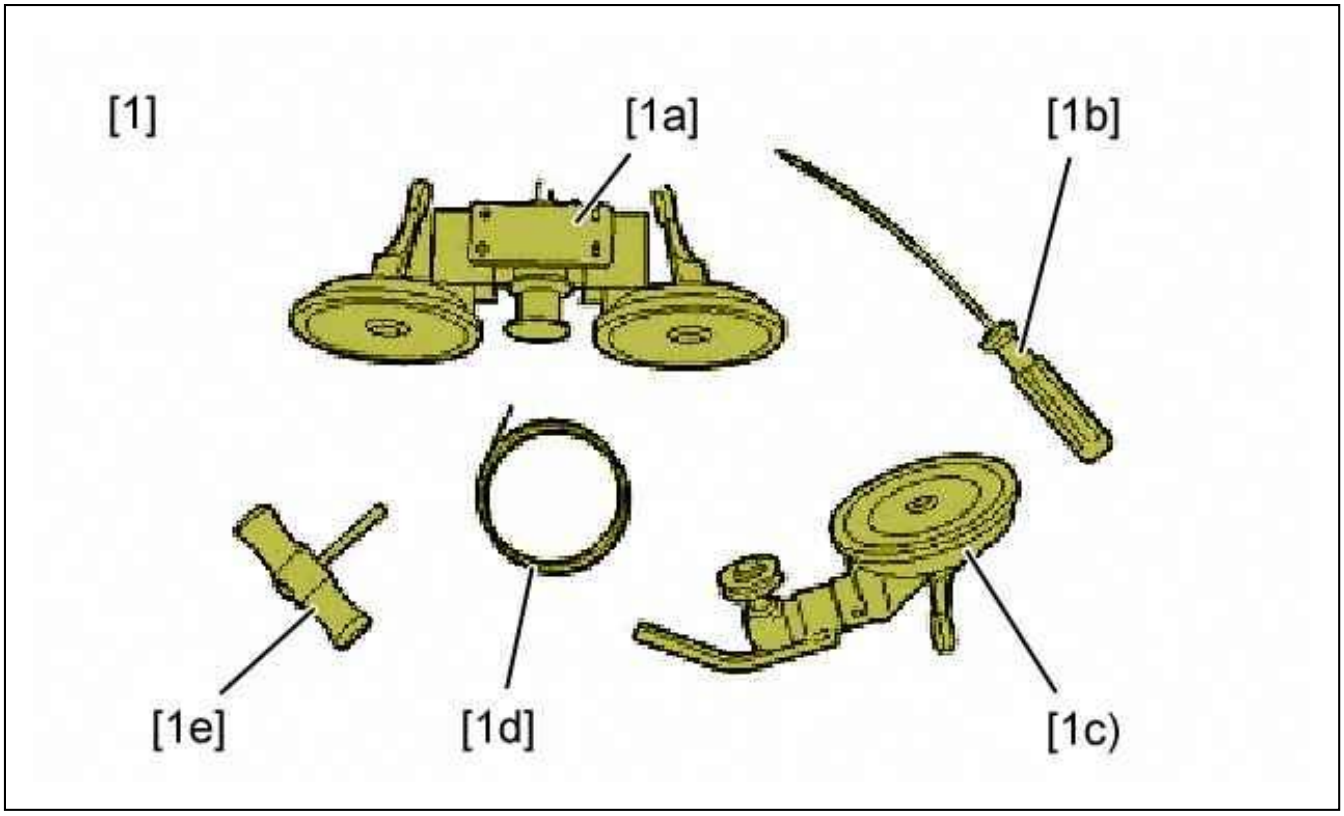

Figure : E5AP2ZQD

[1] Bonded windows removal kit (-).1354.
Composition of the toolkit :

- [1a] Guide roller device
- [1b] Awl
- [1c] Guiding roller
- [1d] Square section cutting wire
- [1e] handle

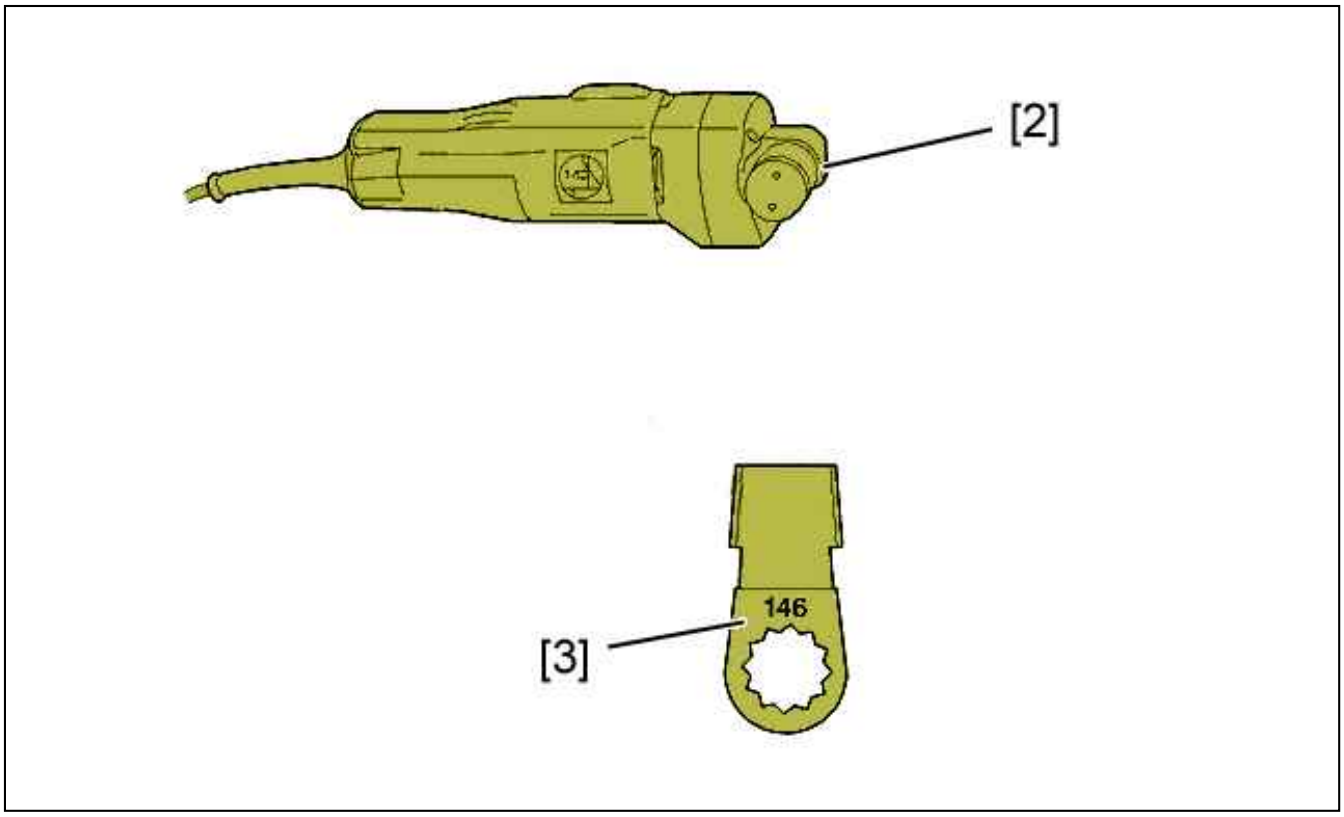

Figure : E5AP2ZRD

[2] electric knife.
[3] shovel blade N° 146.

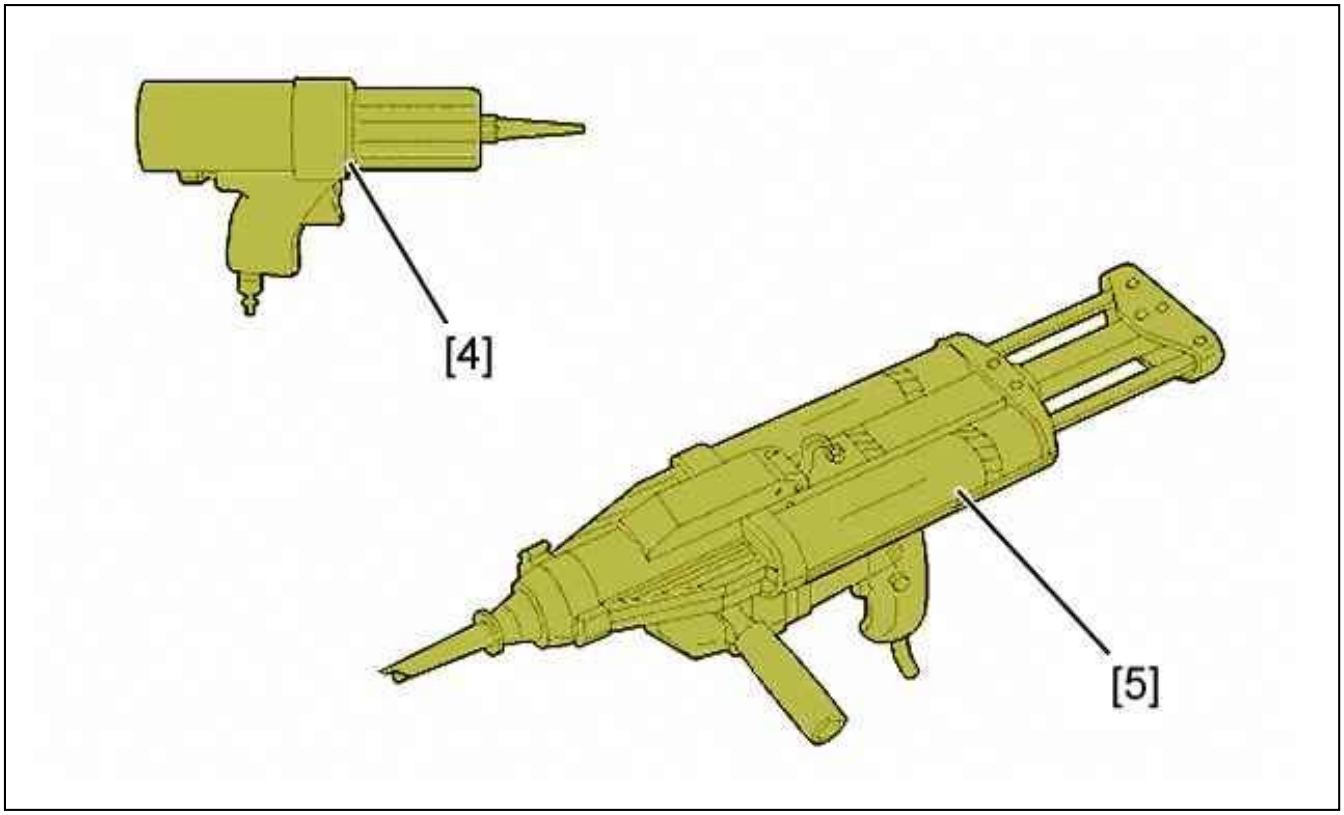

Figure : E5AP30AD

[4] Pneumatic gun (For one part cartridge).

[5] Electric gun (For two-part cartridge).

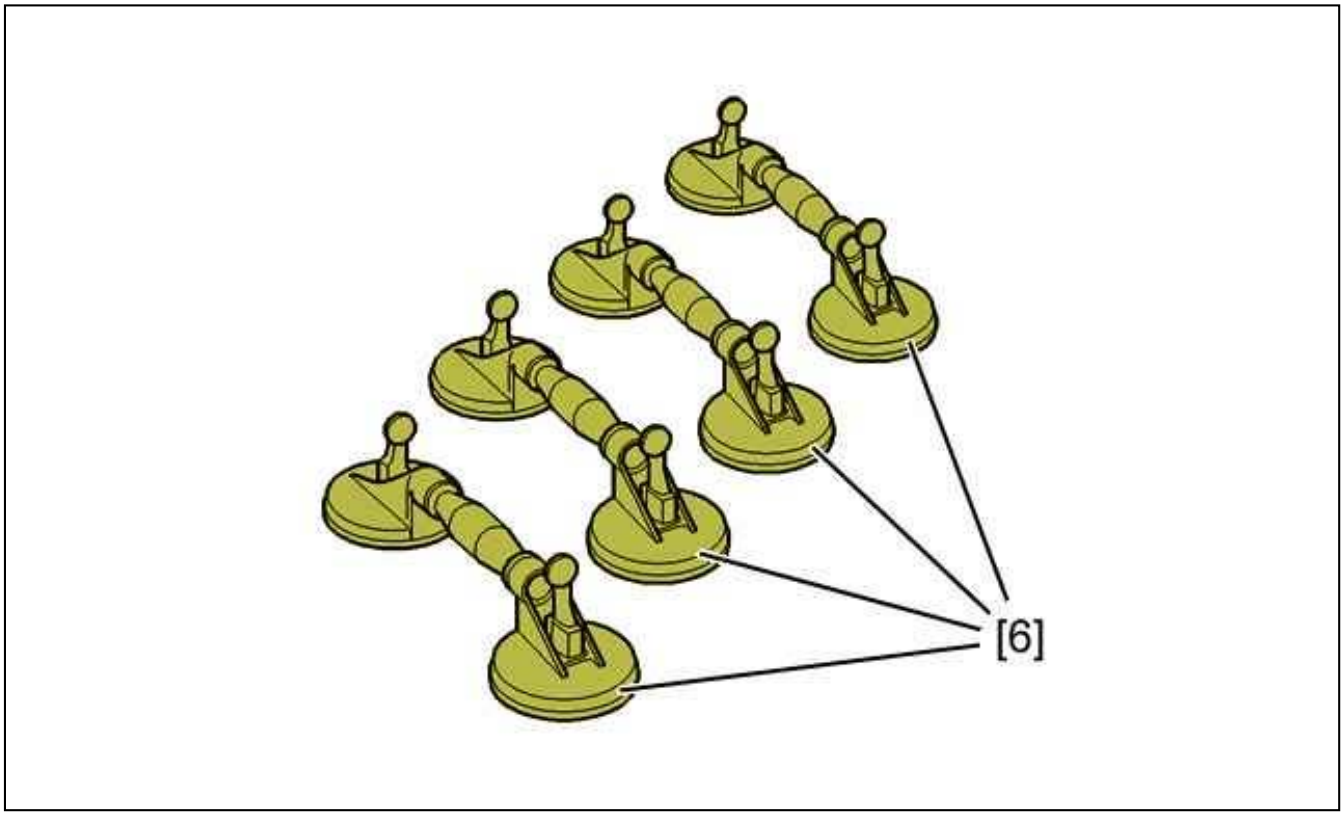

Figure : E5AP2ZTD

[6] Articulated suction pads (Part number 9776.Y0).

2. Removing

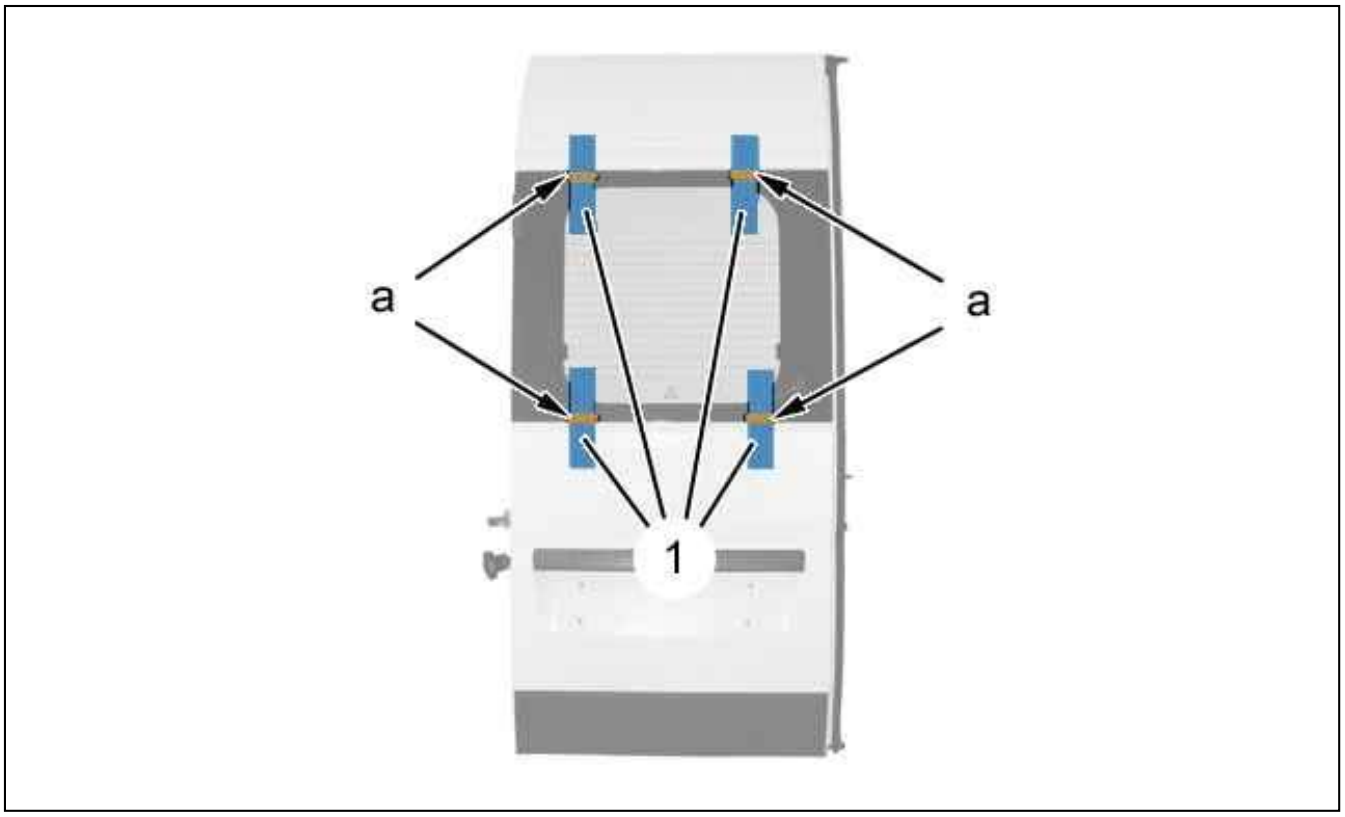

Figure : C4BM0ERD

N.B. : If the window is to be reused, align it and affix adhesive tape (1)(at "a").

Unplug : The 2 de-icing connectors (Rear door window).

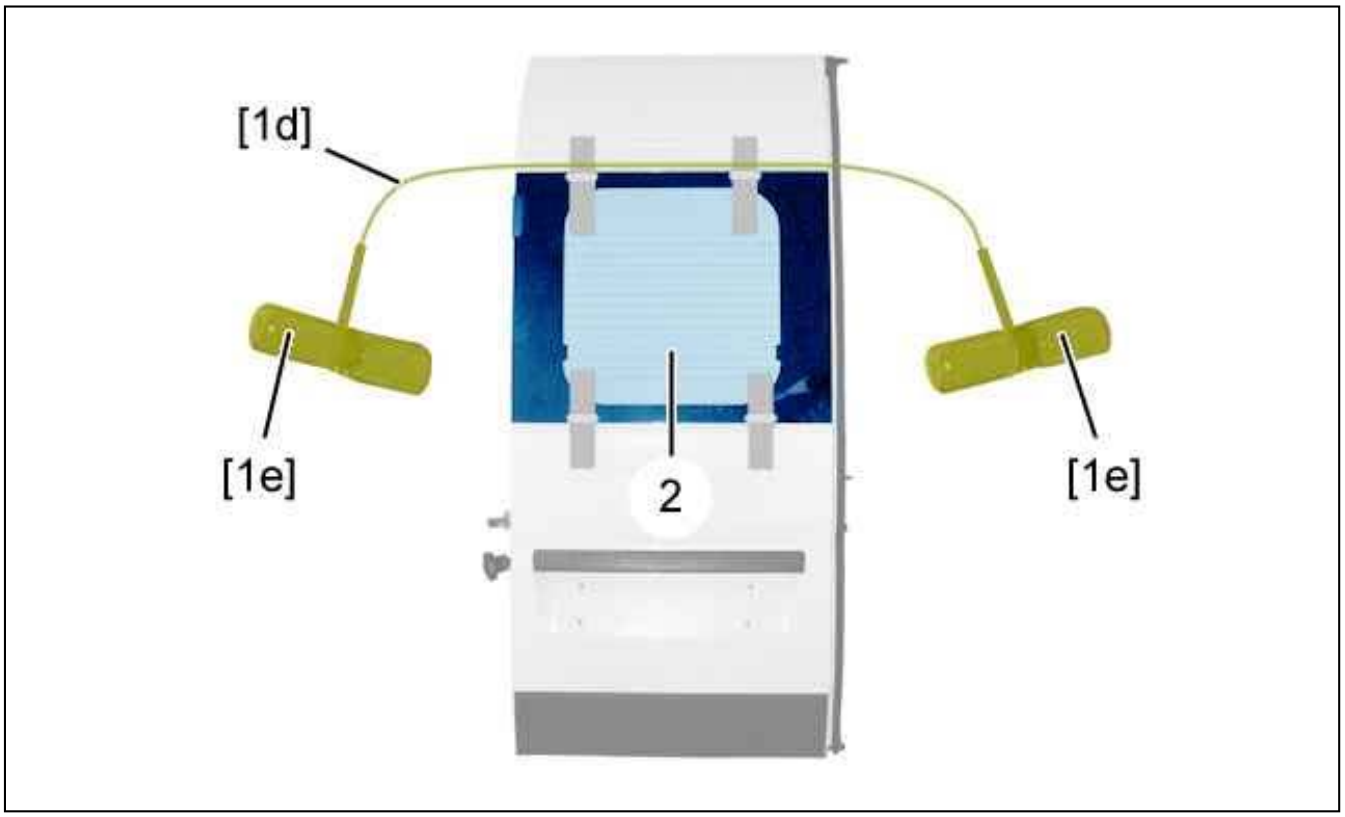

Figure : C4BM0ESD

Install the handles [1e] at each end of the cutting wire [1d].
Pass the cutting wire [1d] as indicated on the diagram (Behind the window).

CAUTION : 2 operators are necessary to carry out the following operations.

Cut the bead of adhesive by means of a to-and-fro movement of the cutting wire [1d].
When cutting, the indexing pins must be cut.

N.B. : The indexing pins are not necessary for refitting.

Remove : The rear door window (2) ; Using the double hinged suction cups [6].

3. Cleaning

3.1. Preparation : Rear door window

Reuse of the rear door window :

- Fit the electric knife [2] with the blade [3]
- Remove the adhesive sealing bead
- Remove any dust using a clean cloth

CAUTION : Only apply the primer to the zones laid bare .

Fitting of a new rear door window :

- Degrease the edge of the glass with the degreaser
- Apply the glass primer provided in the bonding kit part number "A3"

CAUTION : Only apply the primer to the zones laid bare .

3.2. Preparation of the aperture

On the remains of the bead of sealing adhesive :

- Fit the electric knife [2] with the blade [3]
- Remove the adhesive sealing bead
- Remove any dust using a clean cloth

On the new component :

- Degrease the aperture
- Apply the metal primer provided in the bonding kit part number "A3"
- Allow to dry for 10 mn

4. Refitting

4.1. Reuse of the rear door window

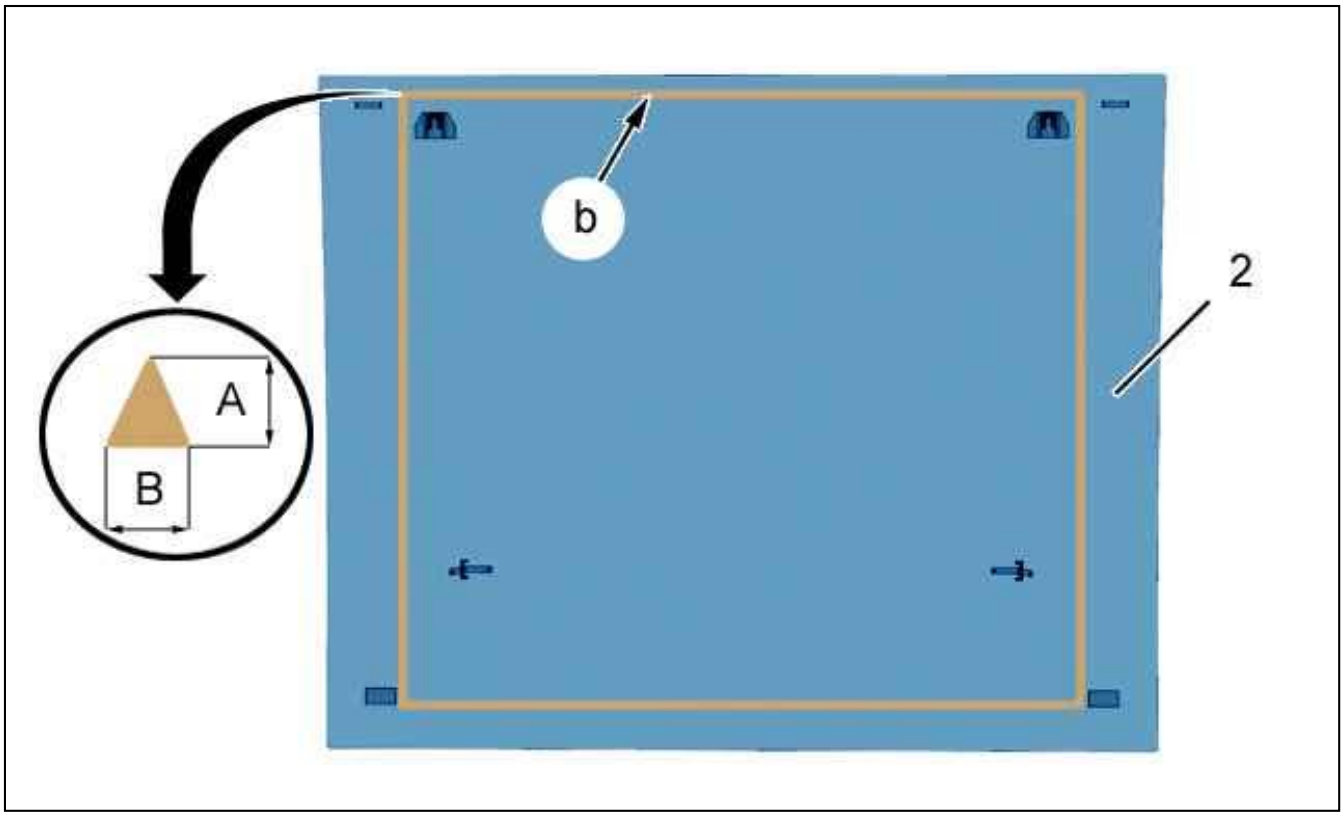

Figure : C5CM01XD

"A" = 12 mm .
"B" = 8 mm .
Cut the nozzle in triangular section to obtain a bead of sealing adhesive "B" wide and "A" deep.

ESSENTIAL : Always replace : The faulty seals.

Apply a bead of sealing adhesive to the periphery of the rear door window (2) (using tools [4] or [5]) (at "b").

ESSENTIAL : Use of the two part product: the time for fitting the window on the vehicle and the start of extrusion of the sealing adhesive is 5 minutes.

Refit the rear door window :

- Using the double hinged suction cups [6]
- Using adhesive tapes (1)

Press lightly on the periphery of the rear door window (2).
Clean the rear door window and its surround.

4.2. Fitting of a new rear door window

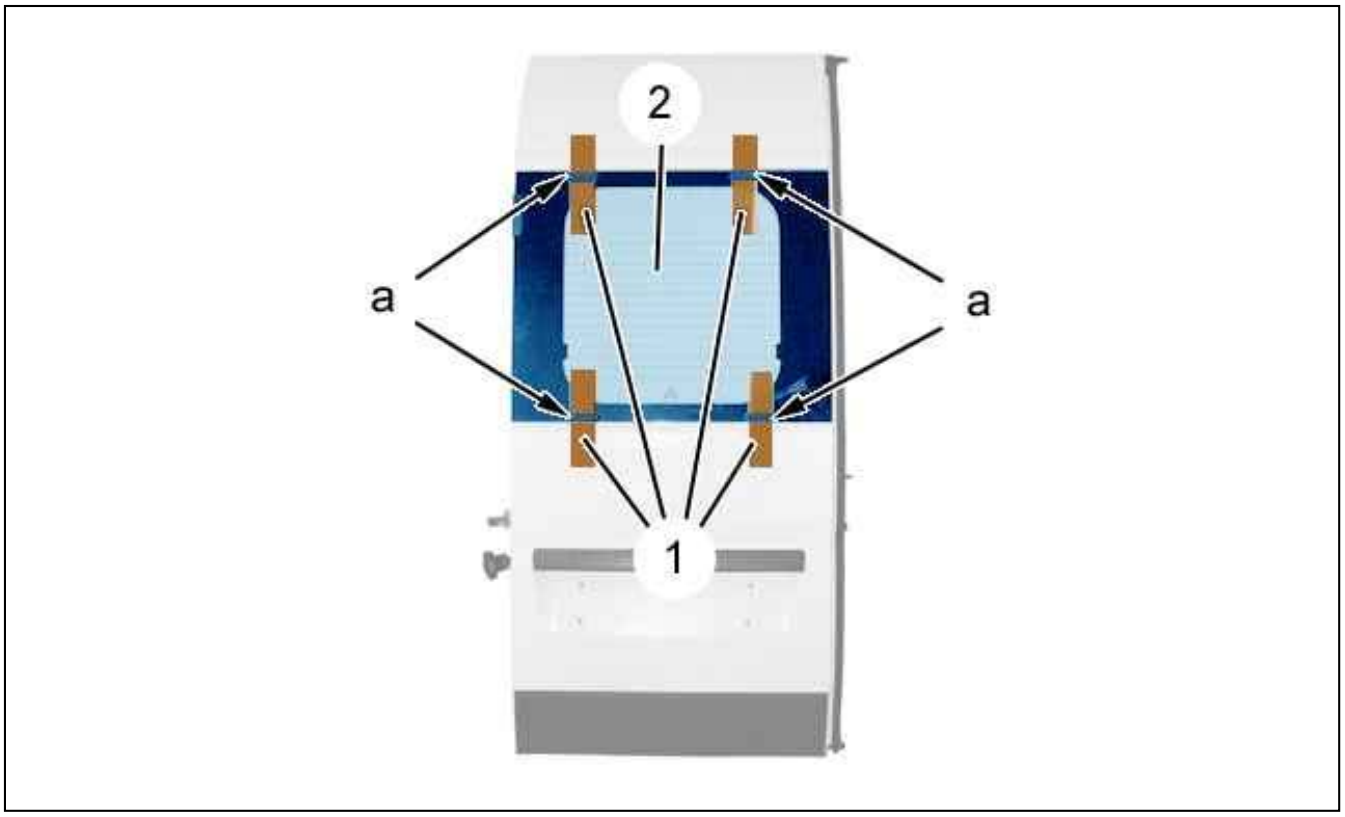

Figure : C4BM0ETD

Test fit the rear door window (2).
Position the adhesive strips (1).
Cut the tape (as "a").
Remove : The rear door window (2).
Apply a bead of sealing adhesive to the periphery of the rear door window (2) (at "b").

ESSENTIAL : Use of the two part product: the time for fitting the window on the vehicle and the start of extrusion of the sealing adhesive is 5 minutes.

Refit the rear door window :

- Using the double hinged suction cups [6]
- Using adhesive tapes (1)

Press lightly on the periphery of the rear door window (2).
Clean the rear door window and its surround.

ESSENTIAL : Observe the vehicle immobilisation time following fitting of the windscreen recommended by the suppliers of the products used.

Continue the fitting operations in the reverse order to removal.
Check the sealing of the rear door window (2).
Clean the rear door window and its surround.
Check the electrical operation of the equipment.

REMOVING - REFITTING : FRONT DOOR

1. Recommended tools

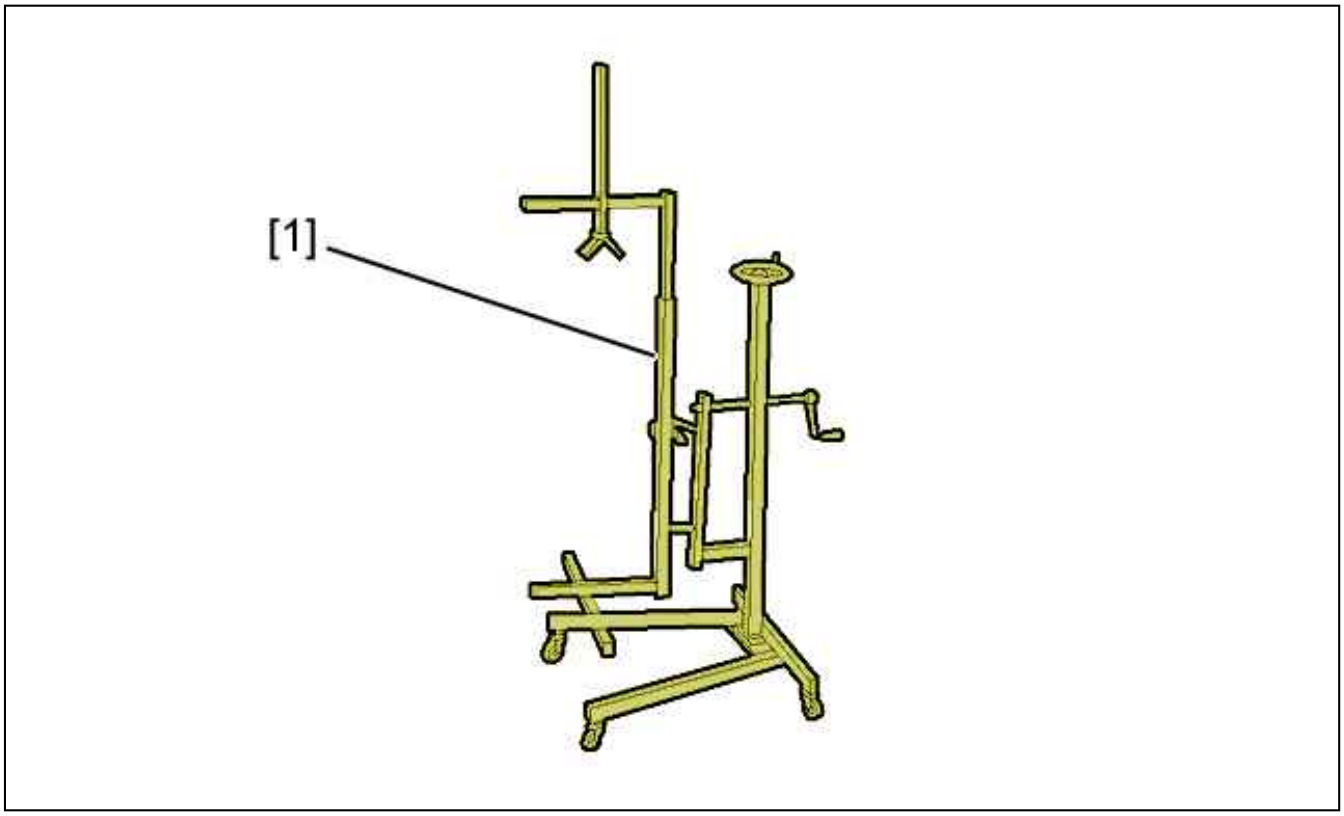

Figure : E5AP2WXD

[1] mobile support for door positioning.

2. Removing

Strip the front door (see the relevant operation).

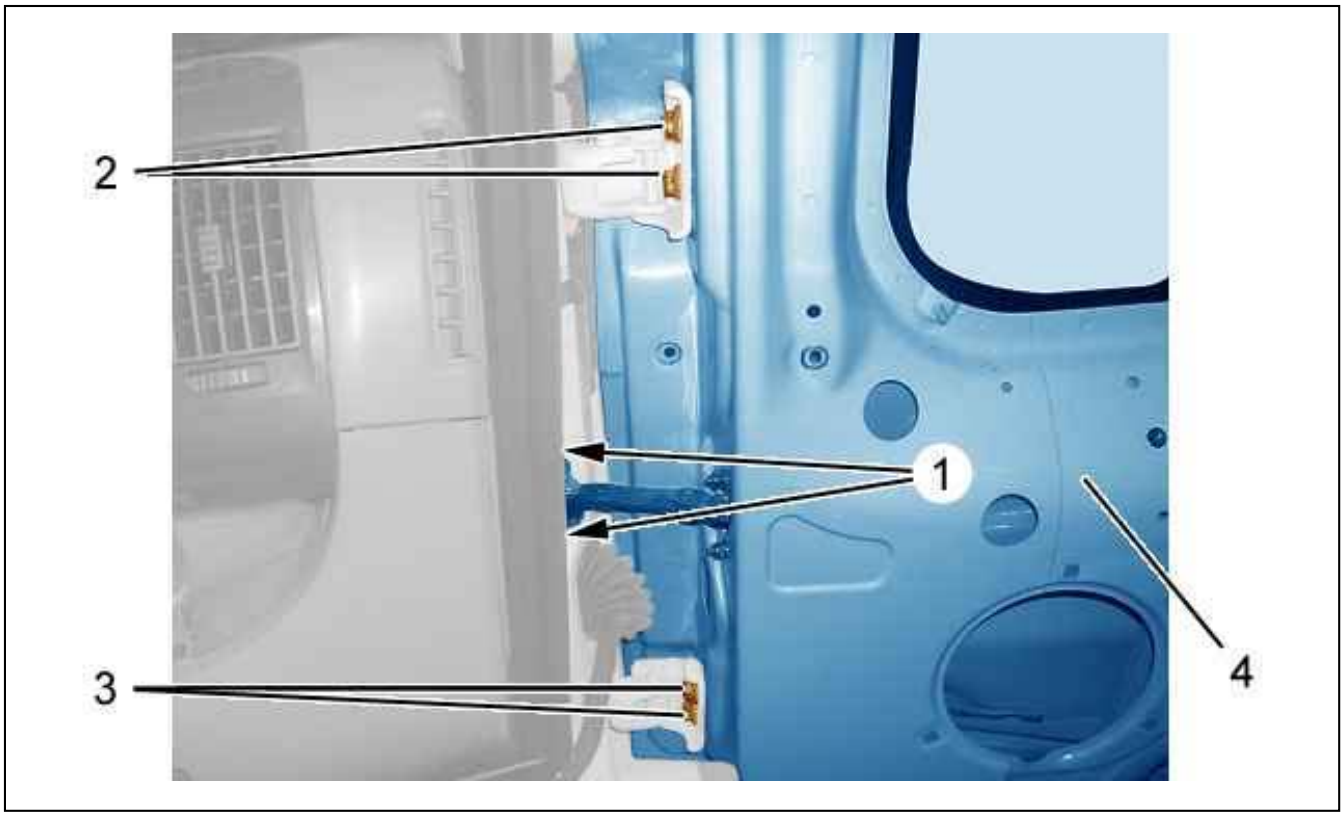

Figure : C5FP0Y2D

Remove :

- The bolts (1 - 2 - 3)
- The front door (4) ; Using tool [1]

3. Refitting

Proceed in the reverse order to removal.
Check the electric operation.
Tighten :

- The bolts (2 - 3) to 2,5 ± 0,2 daN.m
- The bolts (1) to 0,8 ± 0,3 daN.m

4. Adjustment

Fit and clearance values (see the relevant operation).

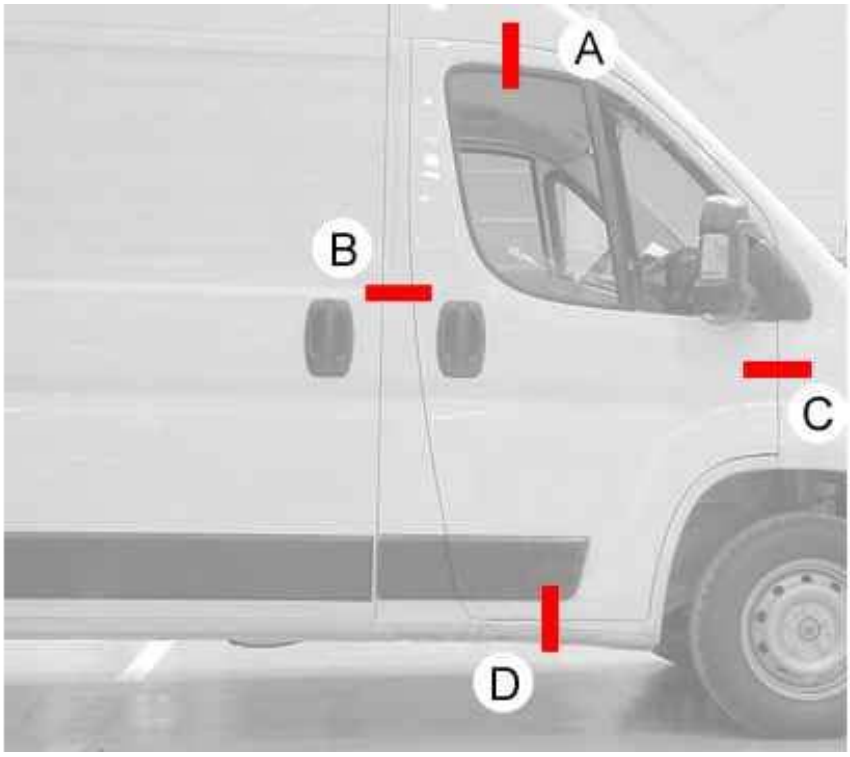

Figure : C4CP1PUD

A : Door upper adjustment.
B, C : Door adjustment.
D : Door lower adjustment.

4.1. Door upper and lower adjustment (at "A" and "D")

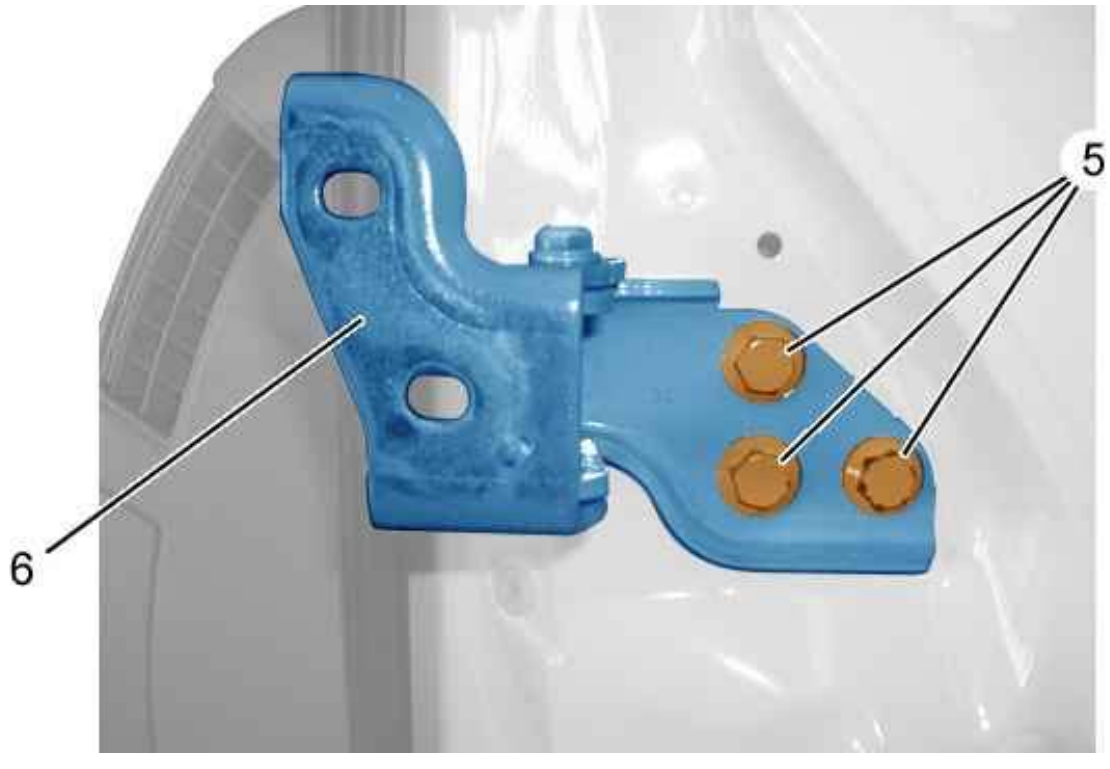

Figure : C4CP1PVD

Slacken the screws (5) one 1/4th of a turn.
Position the front door hinge (6) to adjust the clearance of the door.
Tighten the bolts (5).

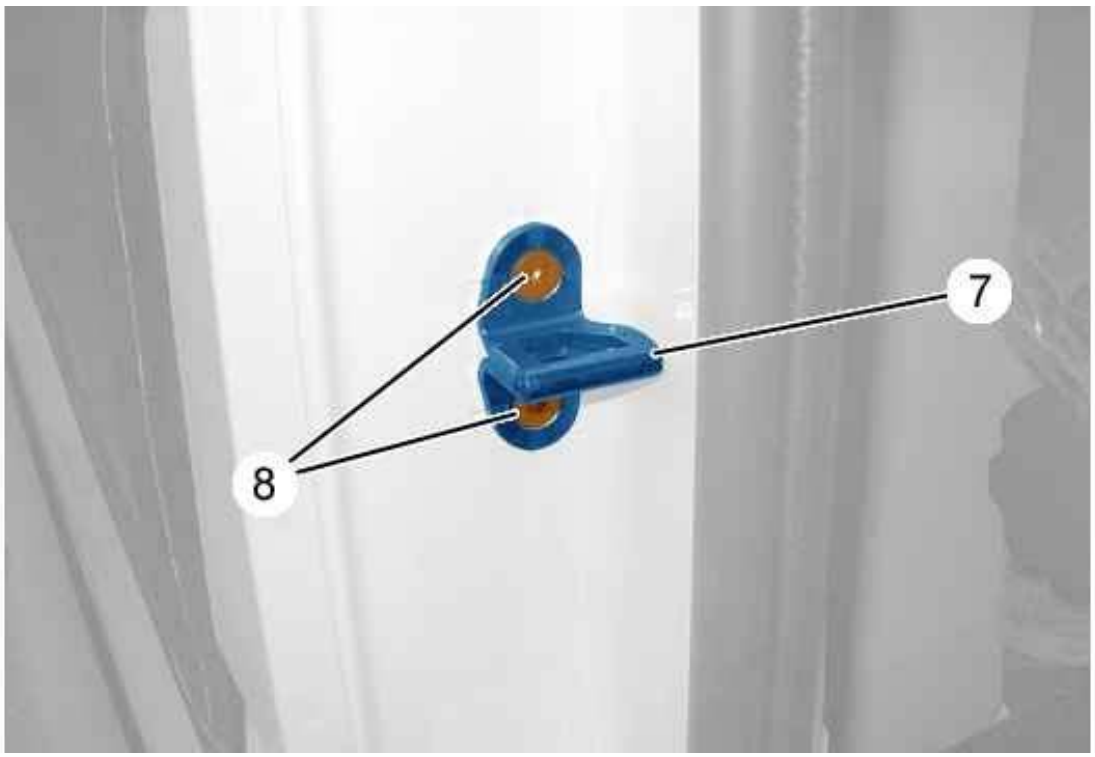

Figure : C4CP1PWD

Slacken the screws (8) one 1/4th of a turn.
Position the front door striker (7) to adjust the fit of the door.
Tighten the bolts (8) to 2,5 ± 0,2 daN.m.

4.2. Door adjustment (at "B" and "C")

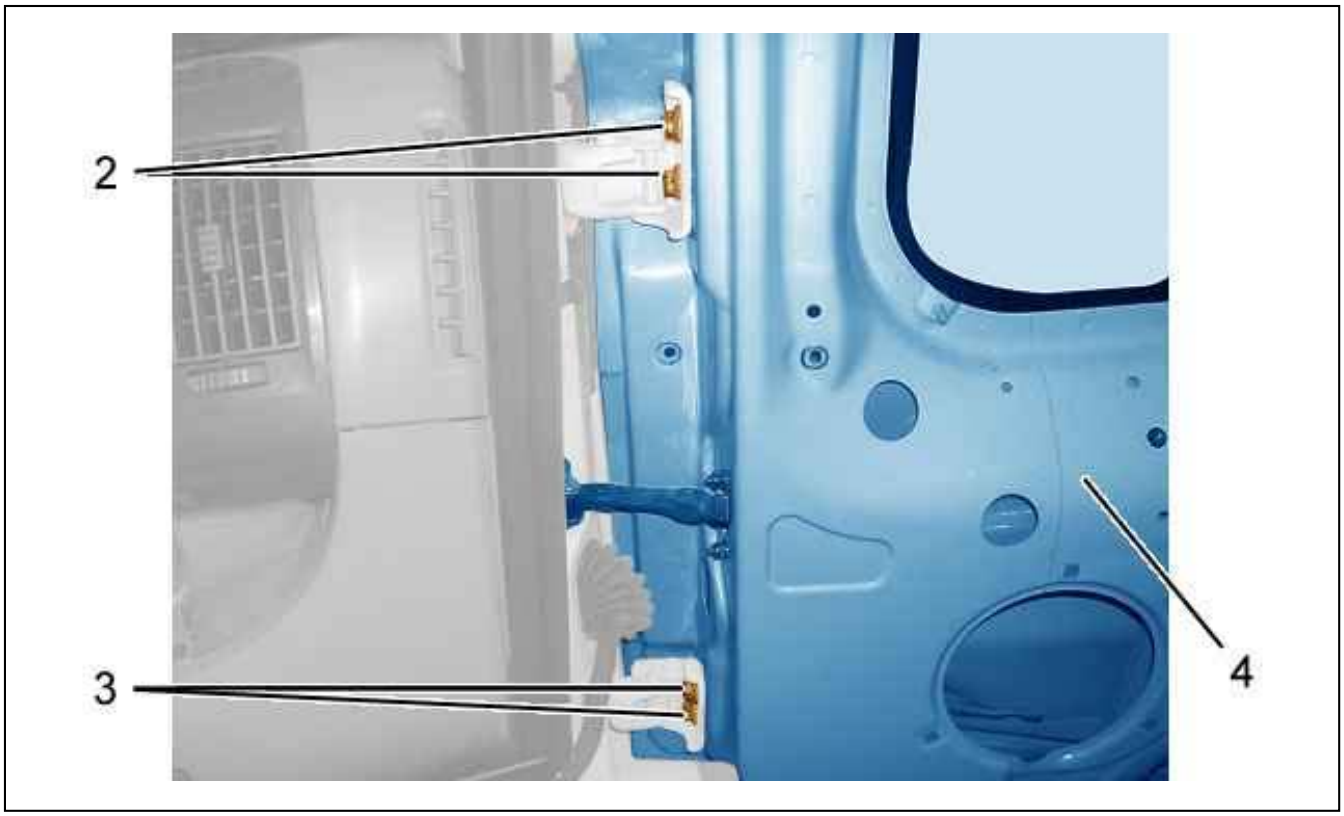

Figure : C5FP0Y3D

Slacken the screws (2 - 3) one 1/4th of a turn.
Position the front door (4) to adjust the clearance and fit of the door.
Tighten the bolts (2 - 3) to 2,5 ± 0,2 daN.m.

REMOVING - REFITTING : REAR DOOR

1. Recommended tools

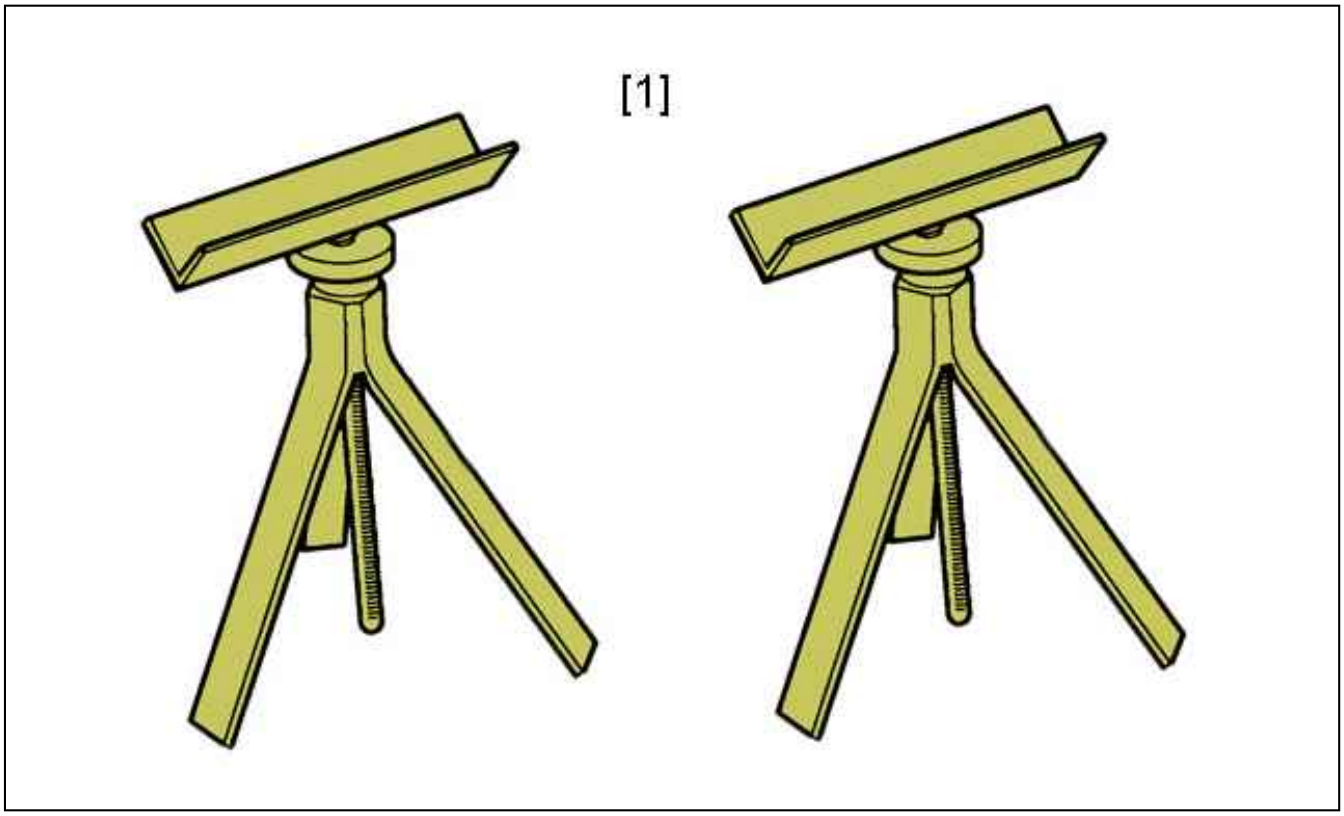

Figure : E5AP2WMD

[1] set of door support stands 0207-T.

2. Removing

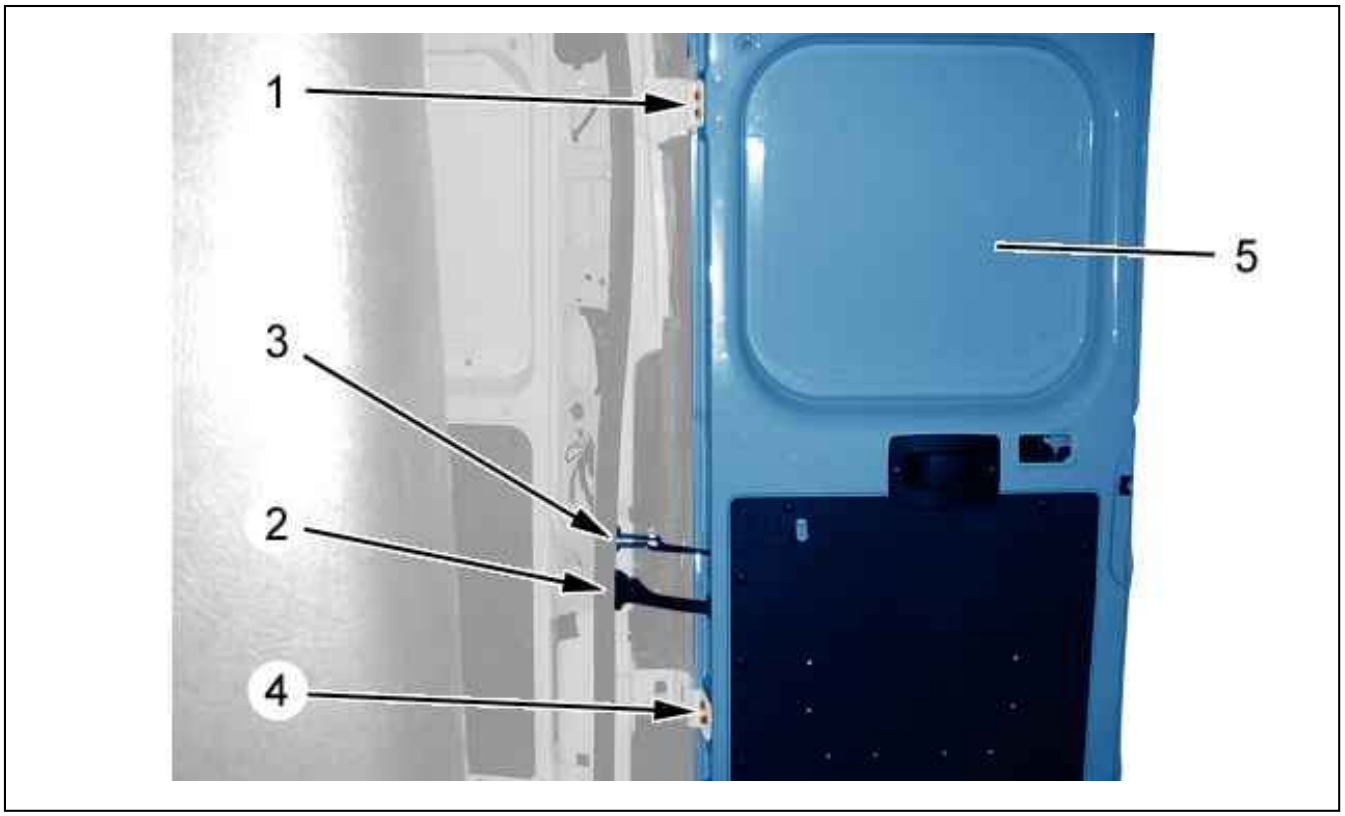

Figure : C4BP1P3D

Support the door (5) ; Using the stands.
Remove the bolts (1), (2), (3), (4).

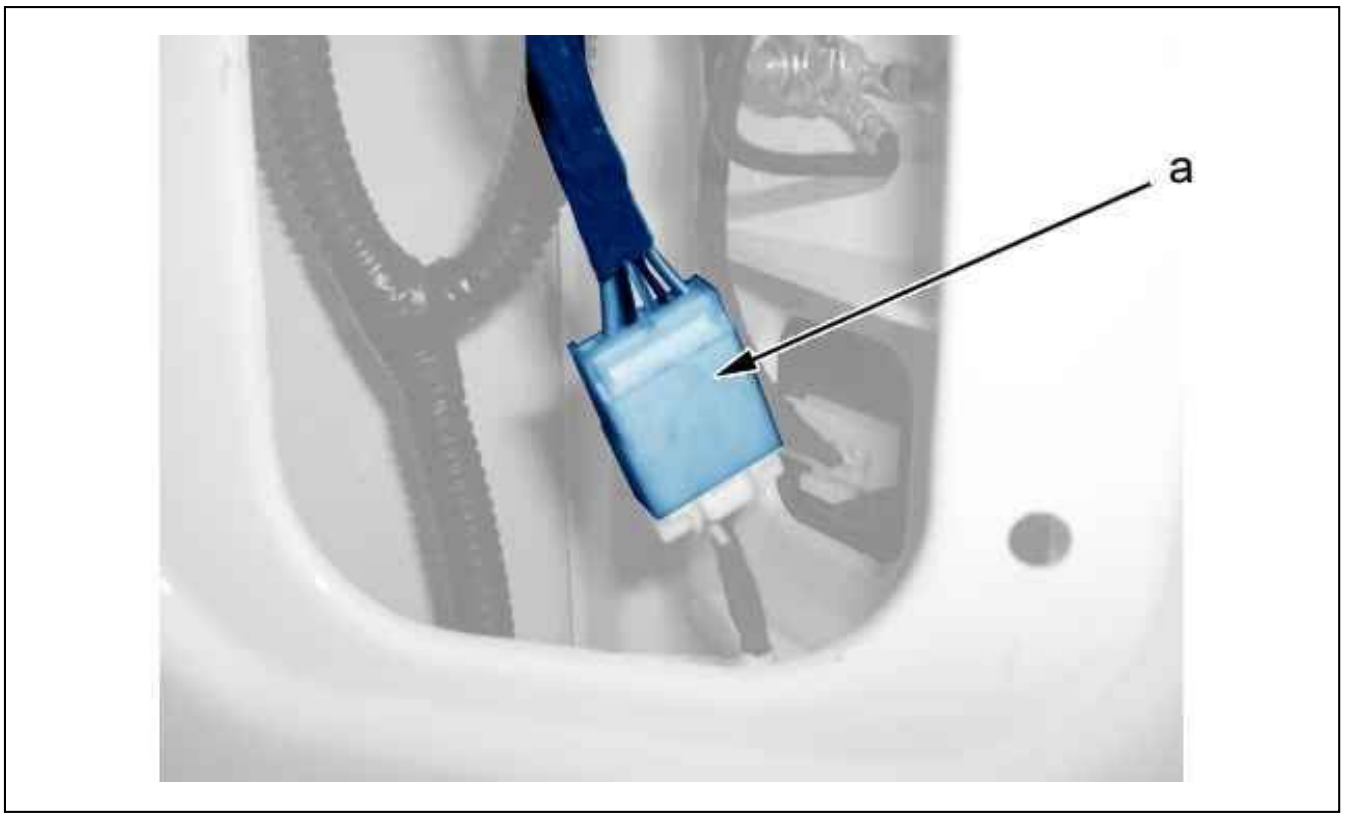

Figure : C4CP1PXD

Disconnect the connector (at "a").

ESSENTIAL : Two people are required to perform the following operation.

Remove the door (5).

3. Refitting

Proceed in the reverse order to removal.
Check the electric operation.
Tighten :

- The bolts (1), (4) to 2,5 ± 0,2 daN.m
- The bolts (2), (3) to 0,8 ± 0,08 daN.m

4. Adjustments

Fit and clearance values (see the relevant operation).

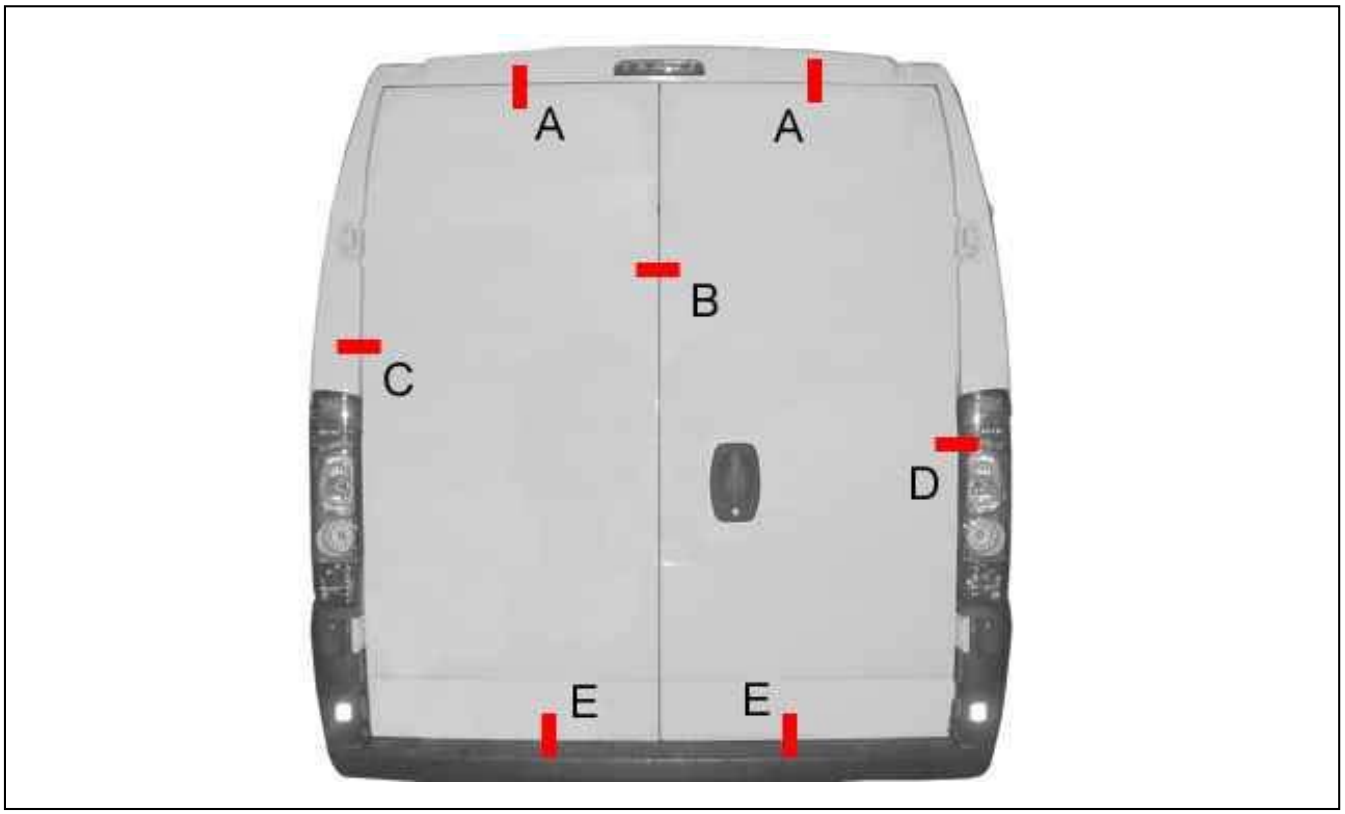

Figure : C4BP1P4D

A : Upper adjustment of the doors.
B, C, D : Adjustment of the doors.
E : Lower adjustment of the doors.

4.1. Upper adjustment of the doors (at "a")

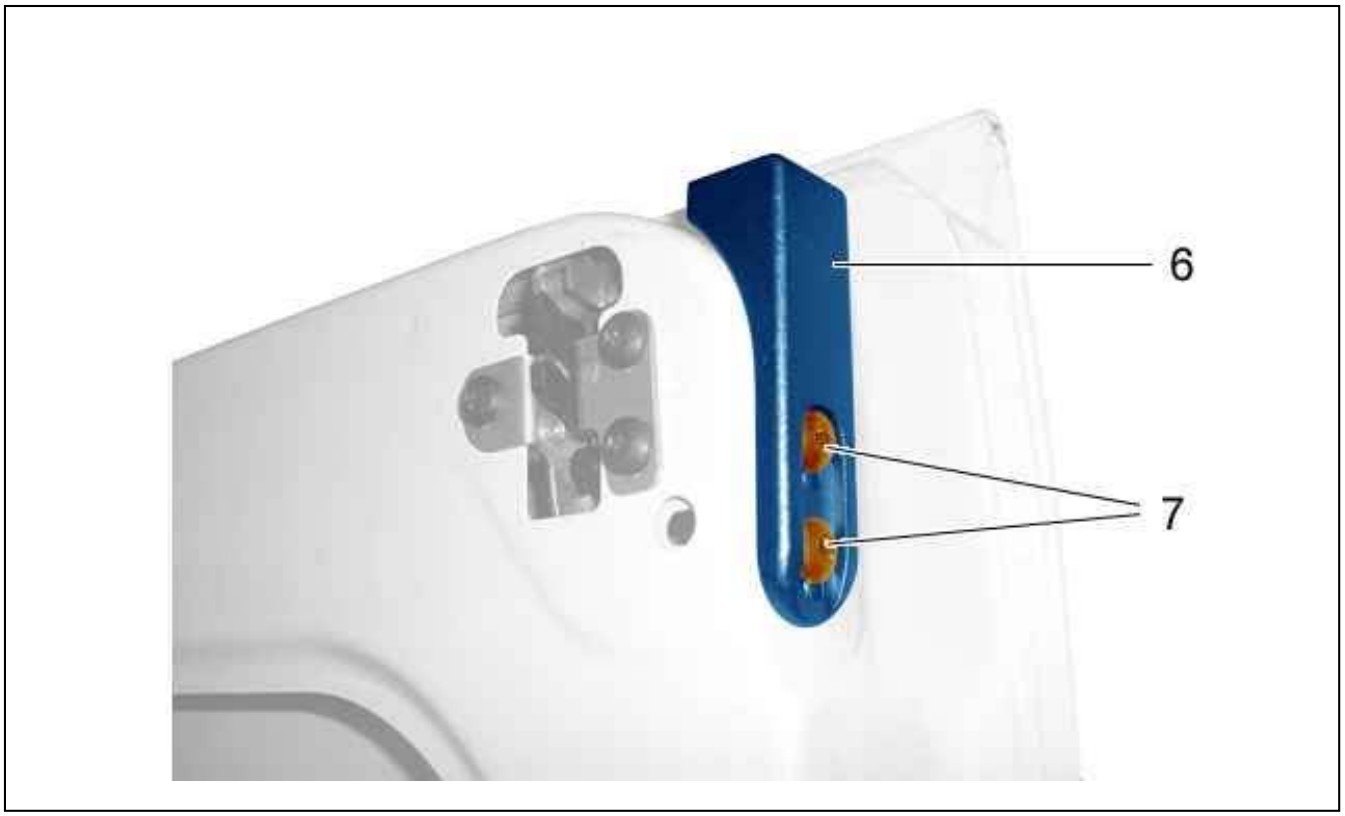

Figure : C4BP1P5D

Slacken the screws (7) one 1/4th of a turn.
Position the upper stops (6) to adjust the clearance of the doors.
Tighten the bolts (7).

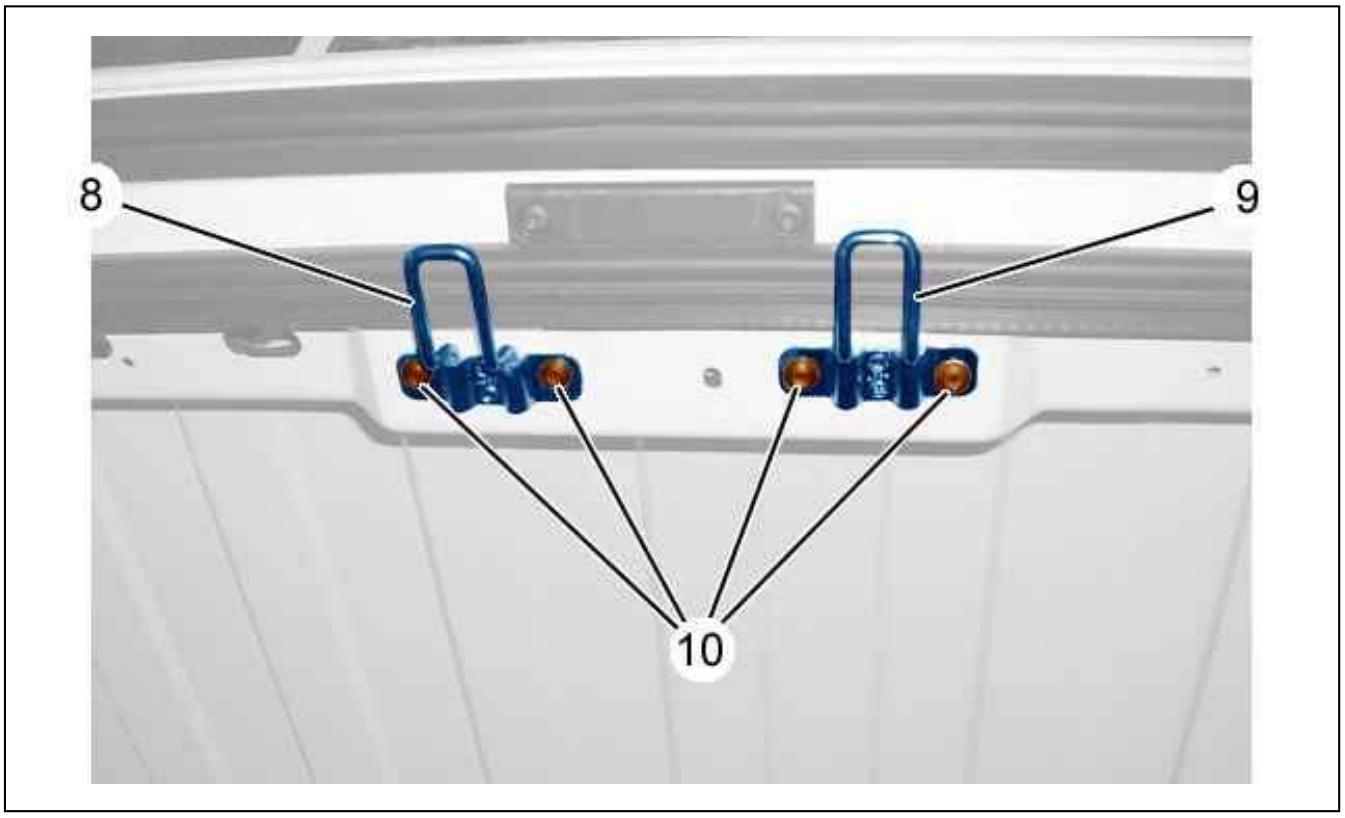

Figure : C4BP1P6D

Slacken the screws (10) one 1/4th of a turn.
Position the strikers (8), (9) to adjust the flush fitting of the doors.
Tighten the bolts (10).

4.2. Adjustment of the doors (at "b", "c" and "d")

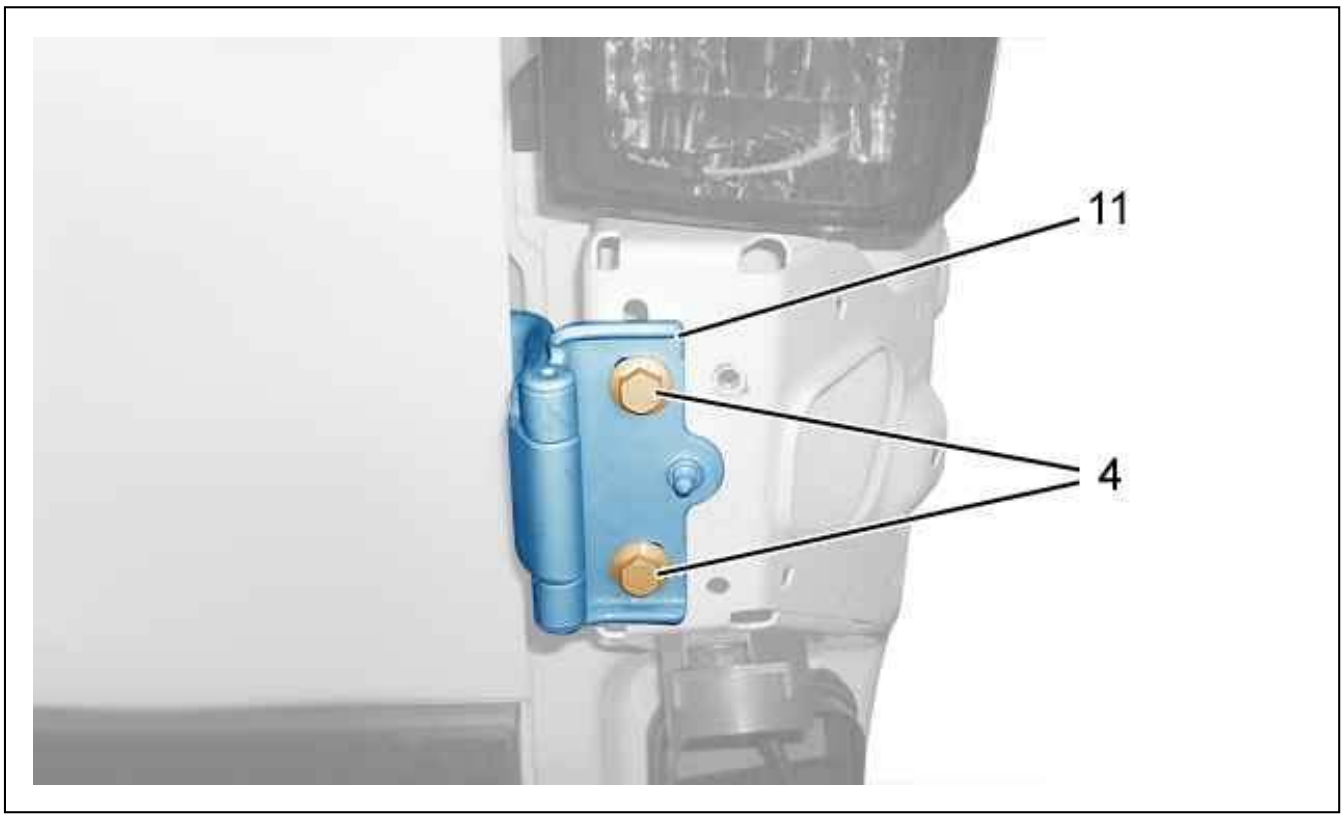

Figure : C4BP1P7D

Slacken the screws (4) one 1/4th of a turn.
Position the hinges (11) to adjust the clearance of the doors.
Tighten the bolts (4) to 2,5 ± 0,2 daN.m.

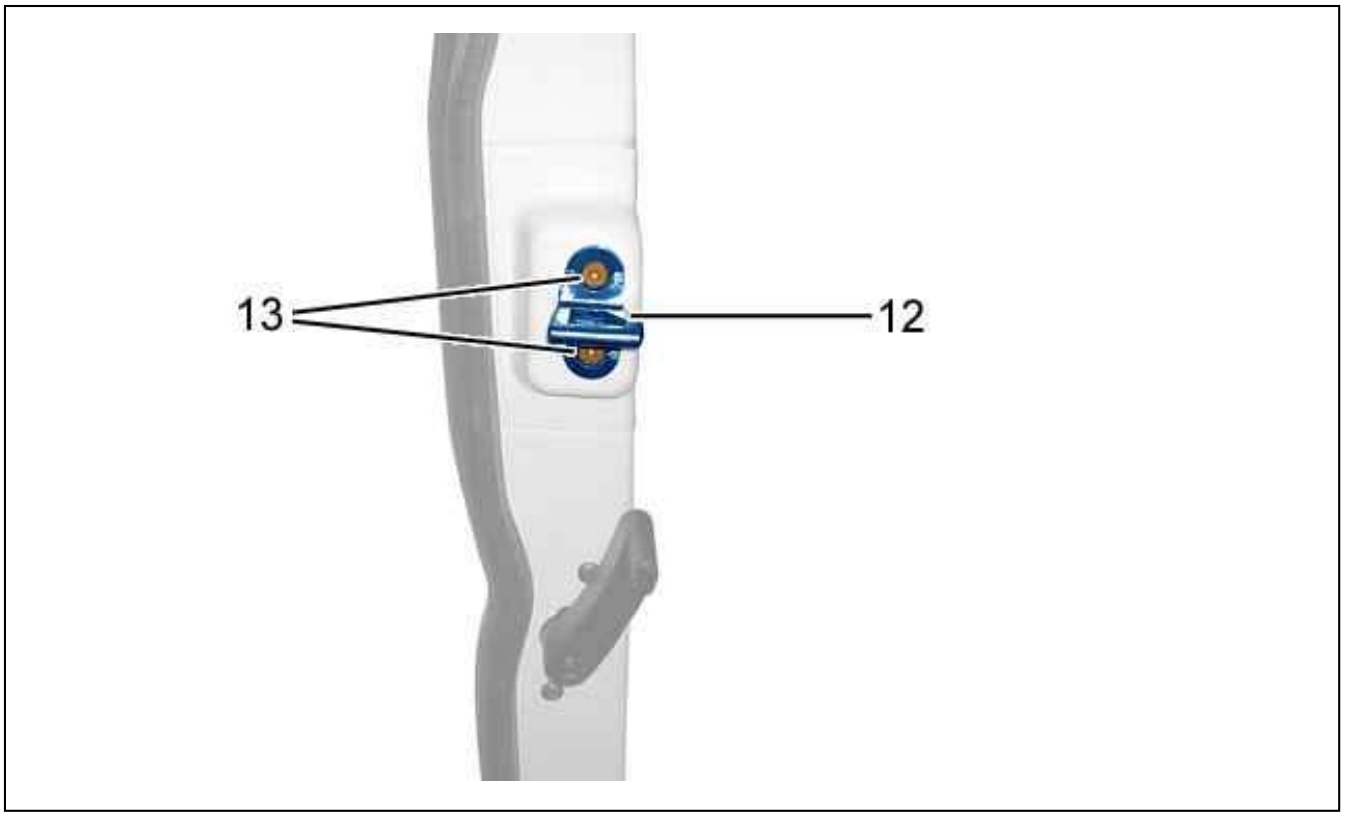

Figure : C4BP1P8D

Slacken the screws (13) one 1/4th of a turn.
Position the striker (12) to adjust the flush fitting of the doors.
Tighten the bolts (13).

4.3. Lower adjustment of the doors (at "e")

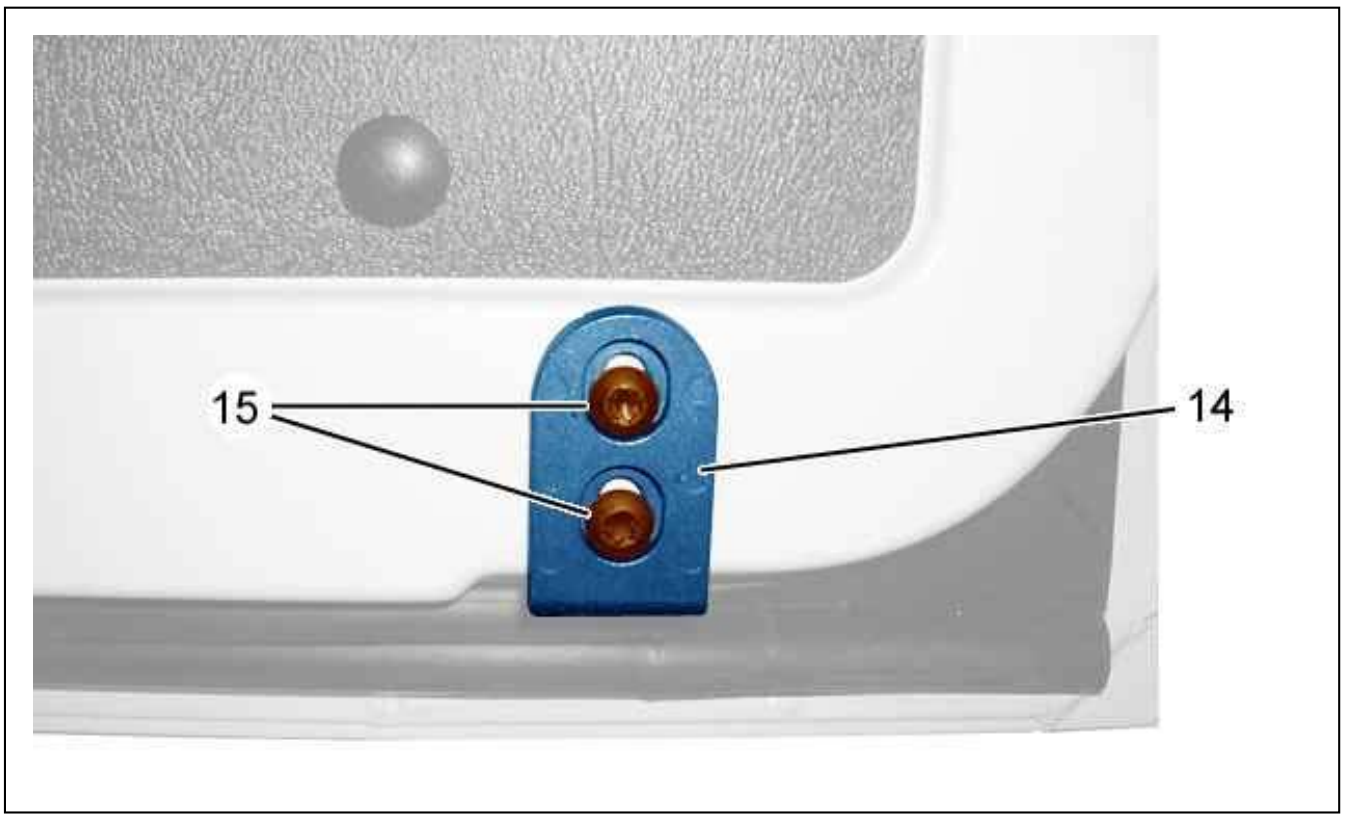

Figure : C4BP1P9D

Slacken the screws (15) one 1/4th of a turn.
Position the lower stops (14) to adjust the clearance of the doors.
Tighten the bolts (15).

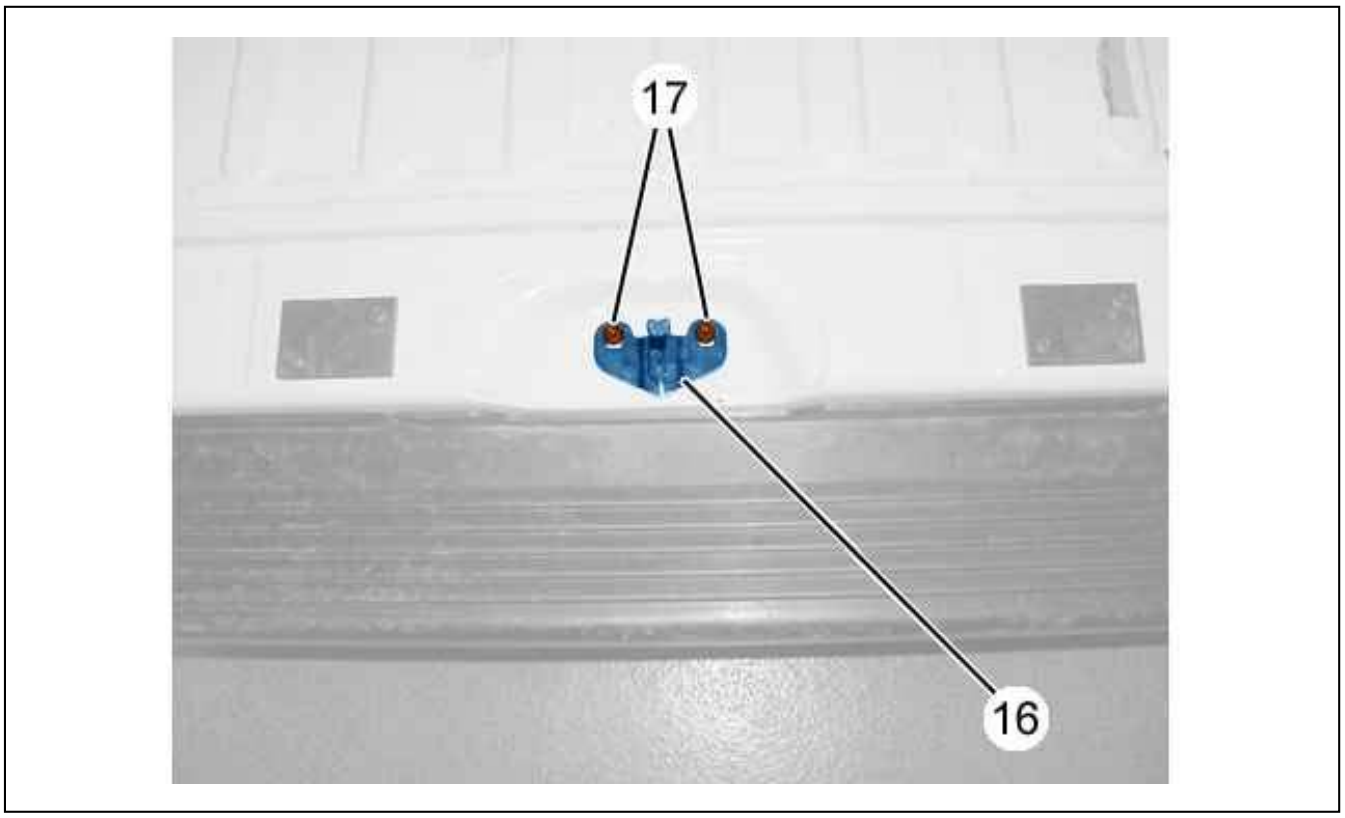

Figure : C4BP1PAD

Slacken the screws (17) one 1/4th of a turn.
Position the lower striker (16) to adjust the flush fitting of the doors.
Tighten the bolts (17).

REMOVING - REFITTING : REAR DOOR HINGES

ESSENTIAL : Observe the safety and cleanliness recommendations .

1. Removing

Remove :

- The rear bumper (see the relevant operation)
- The rear door (see the relevant operation)

1.1. Top hinge

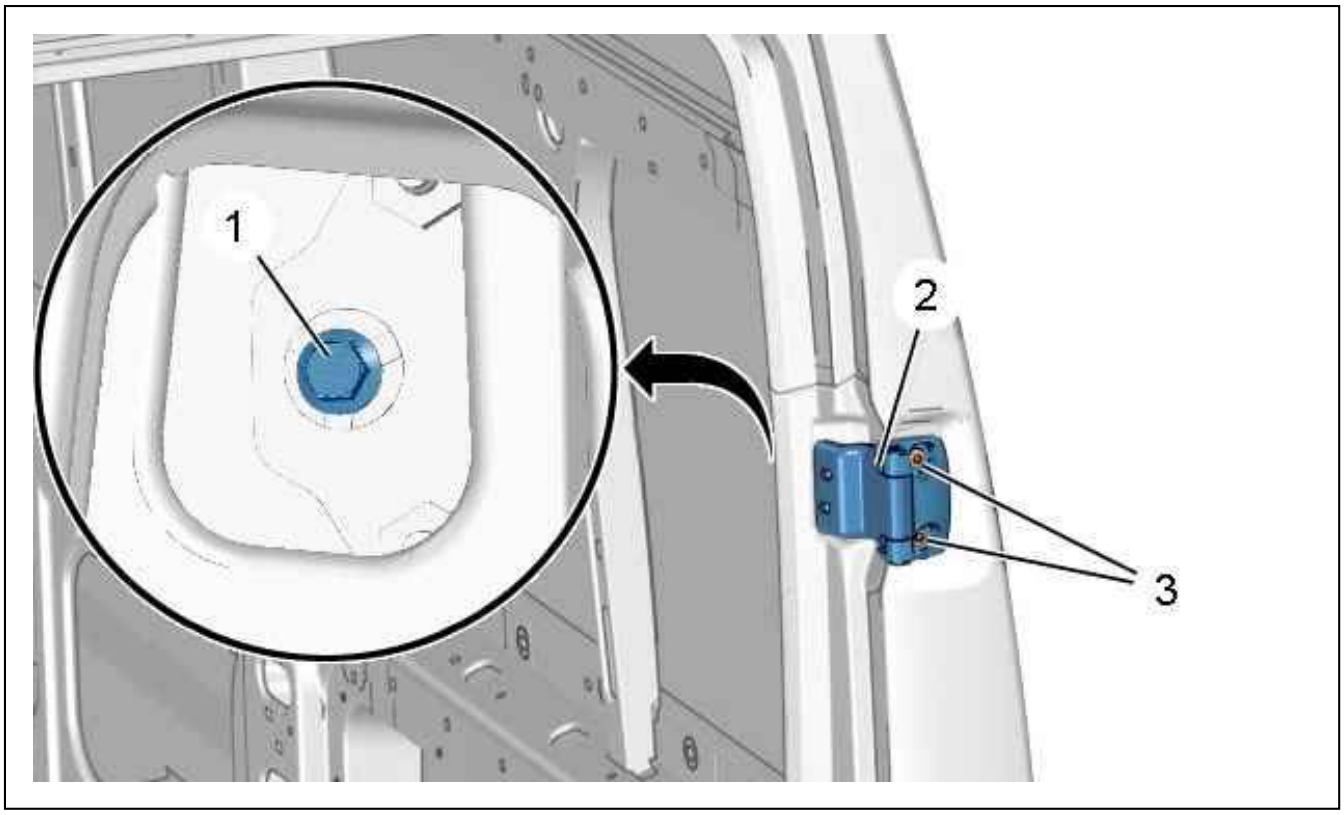

Figure : C4BG01TD

Remove :

- The (1) bolt (Through the interior of the vehicle)
- The bolts (3)
- The upper hinge (2) (Rear door)

1.2. Bottom hinge

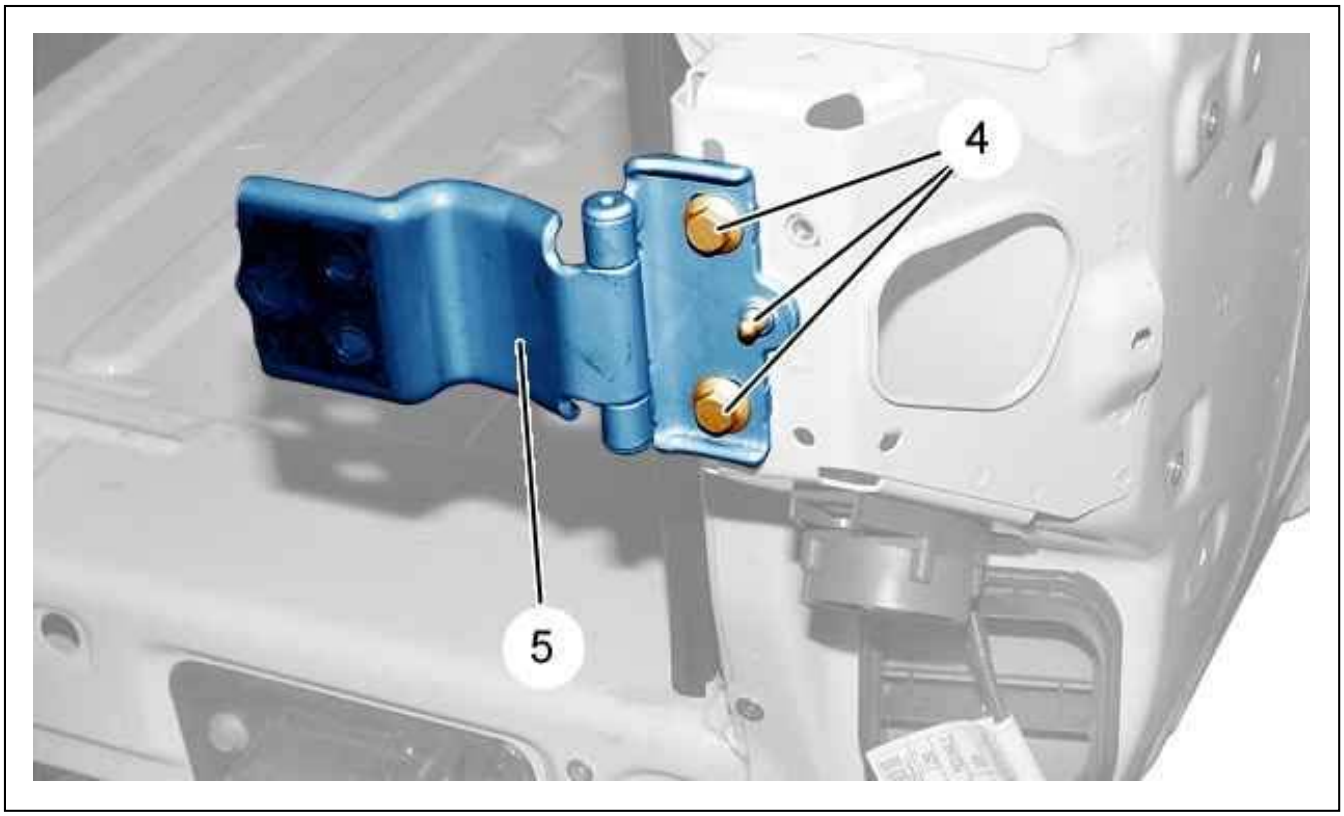

Figure : C4BG01UD

Remove :

- The bolts (4)
- The lower hinge (5) (Rear door)

2. Refitting

Proceed in the reverse order to removal.

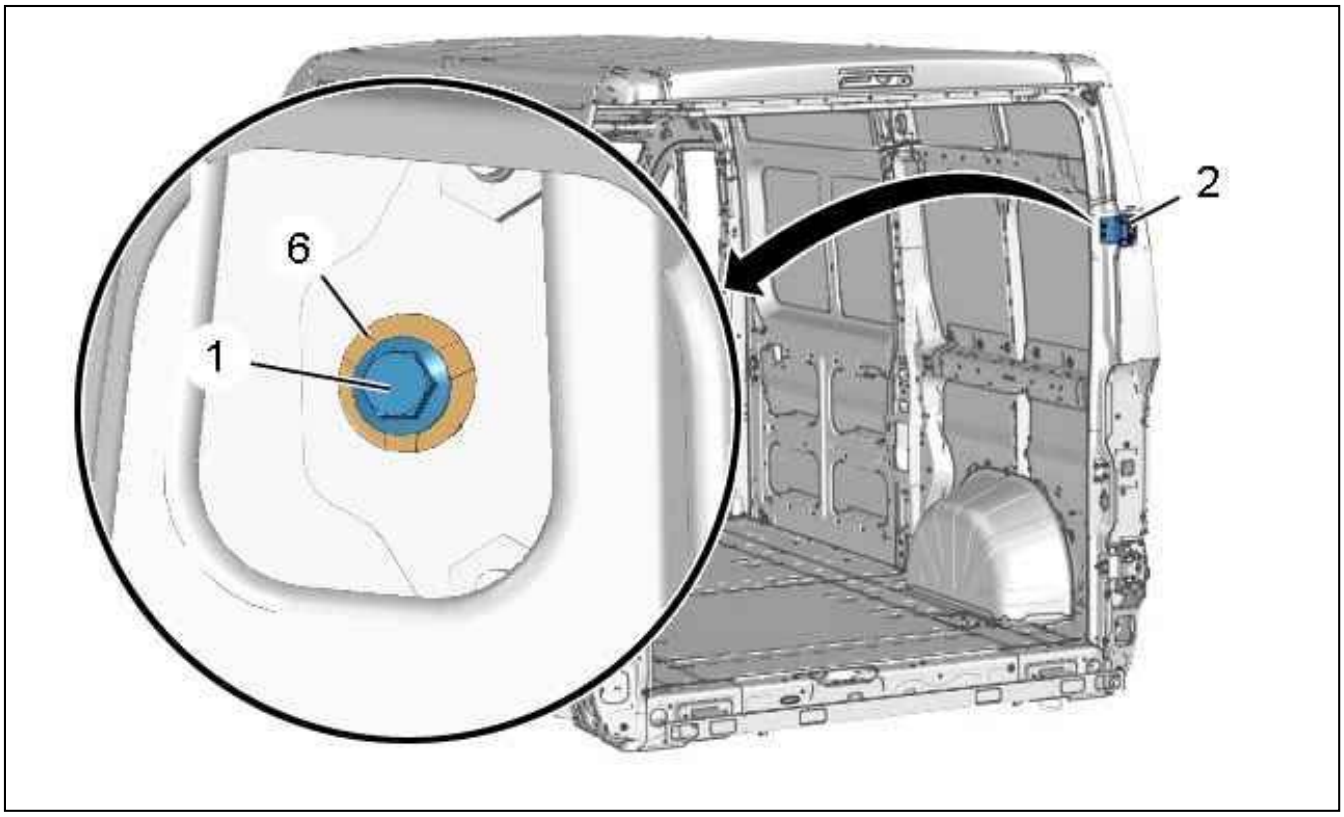

Figure : C4BG01VD

ESSENTIAL : Check that the sealing washer (6) is present.

Tighten the bolts to (1), (3), (4) m.daN .
Adjust the fits and clearances of the hinged rear doors (see the relevant operation).

REMOVING - REFITTING : SIDE SLIDING DOOR WINDOW

ESSENTIAL : Observe the safety and cleanliness recommendations.

1. Recommended tools

Glazing consumable .

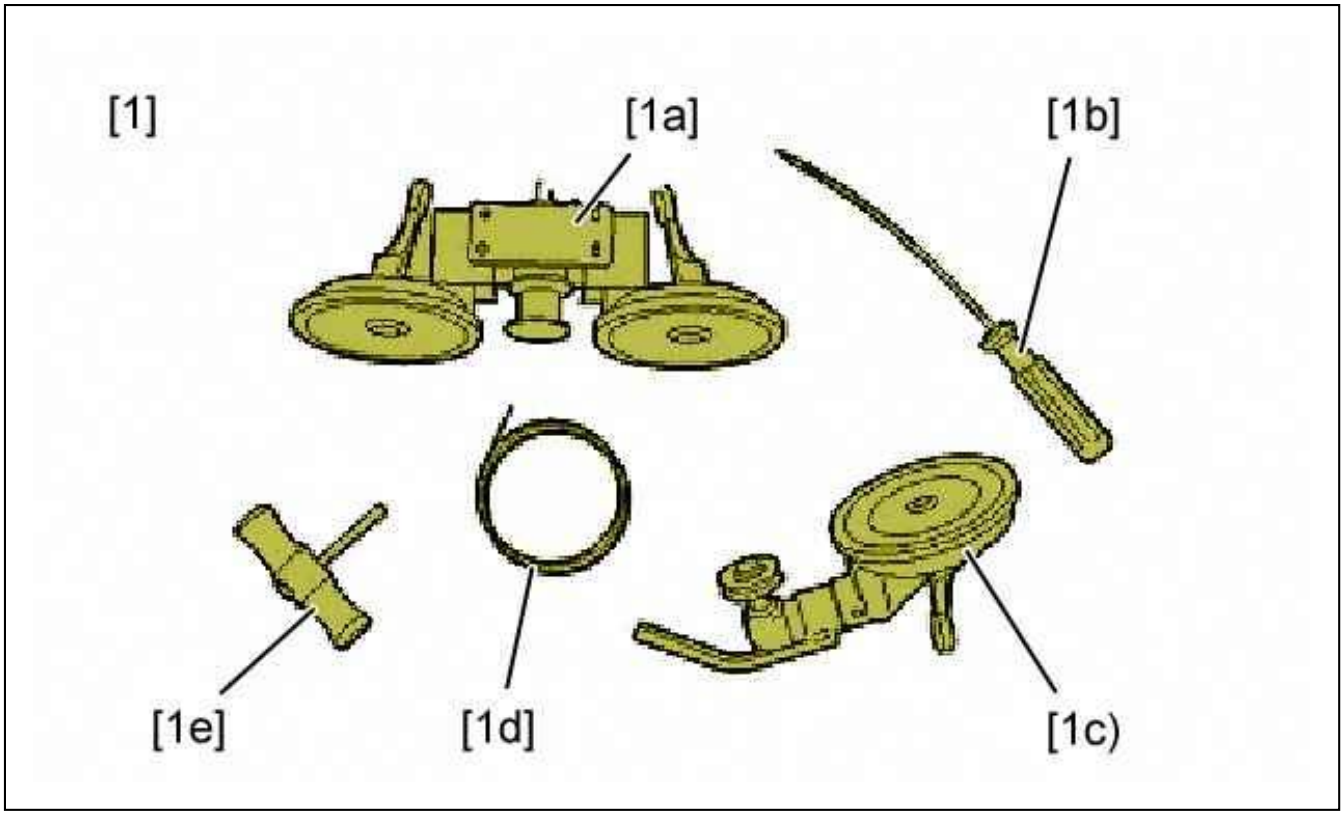

Figure : E5AP2ZQD

[1] Bonded windows removal kit (-).1354.
Composition of the toolkit :

- [1a] Guide roller device
- [1b] Awl
- [1c] Guiding roller
- [1d] Square section cutting wire
- [1e] handle

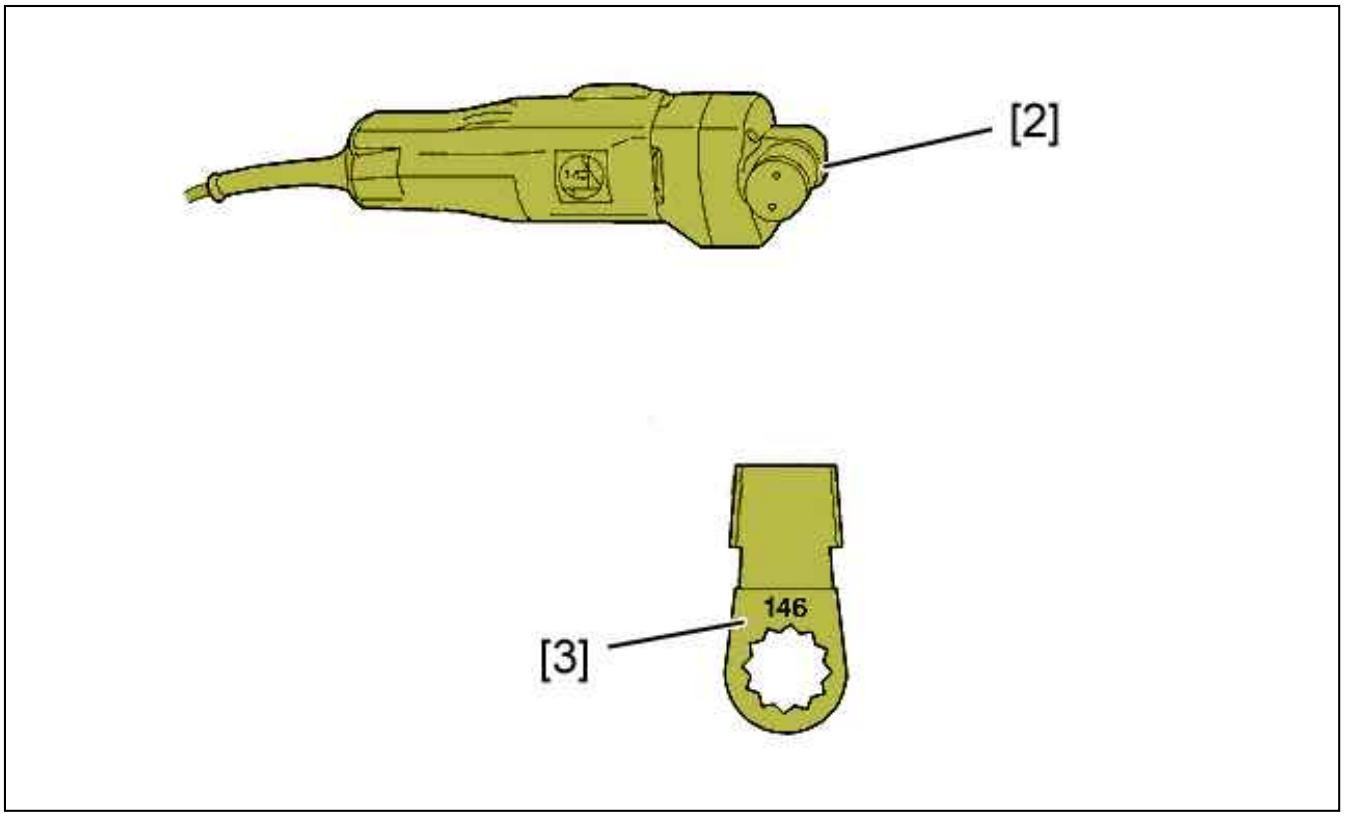

Figure : E5AP2ZRD

[2] electric knife.
[3] shovel blade N° 146.

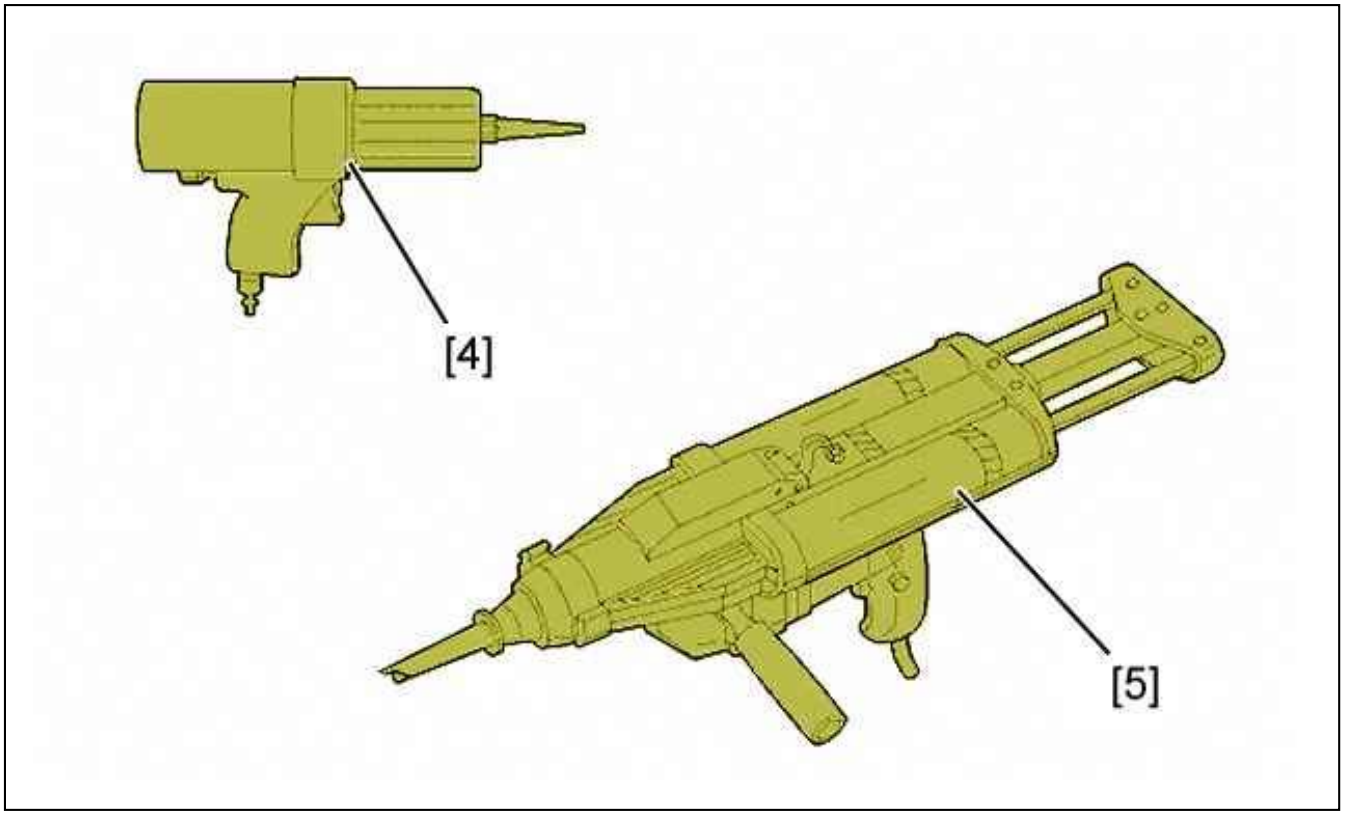

Figure : E5AP30AD

[4] Pneumatic gun (For one part cartridge).

[5] Electric gun (For two-part cartridge).

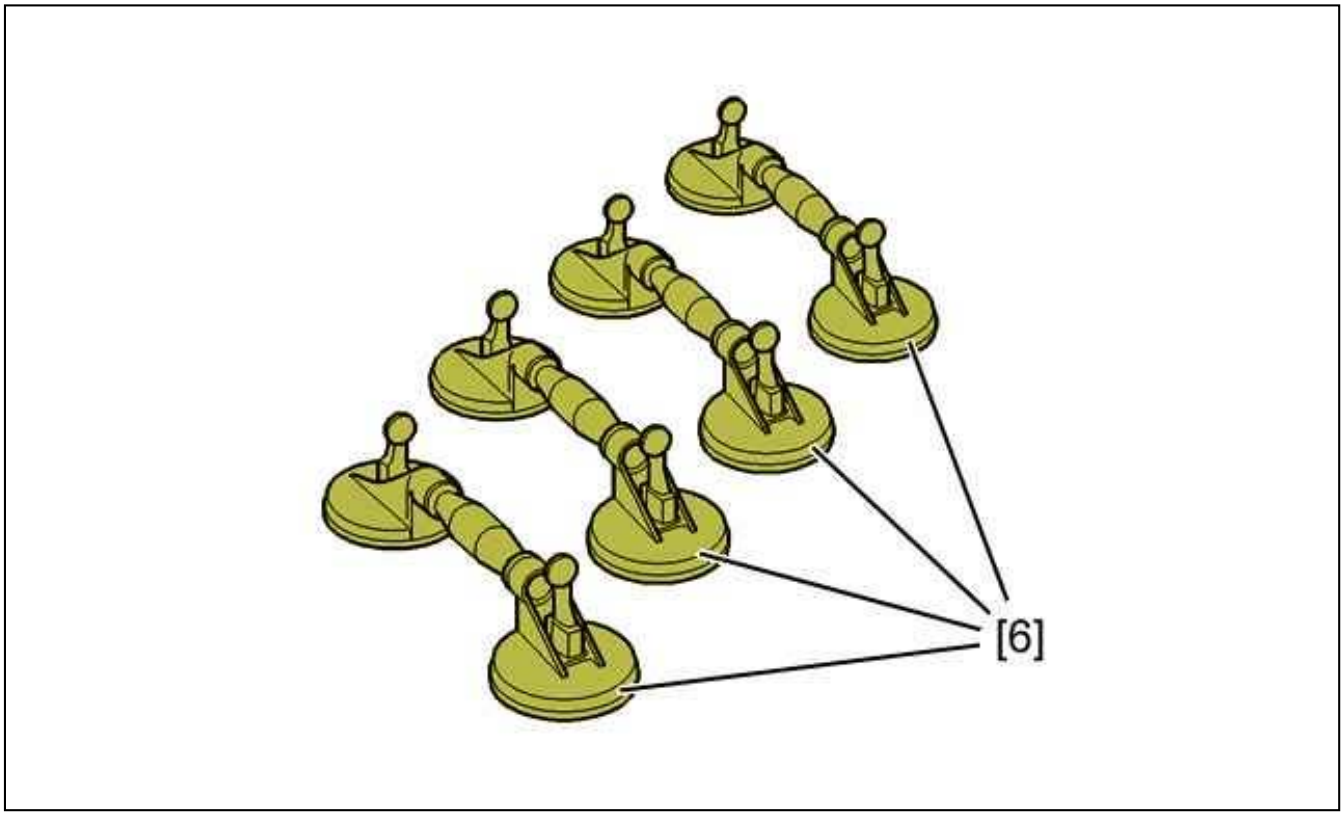

Figure : E5AP2ZTD

[6] Articulated suction pads (Part number 9776.Y0).

2. Removing

2.1. Mobile glass

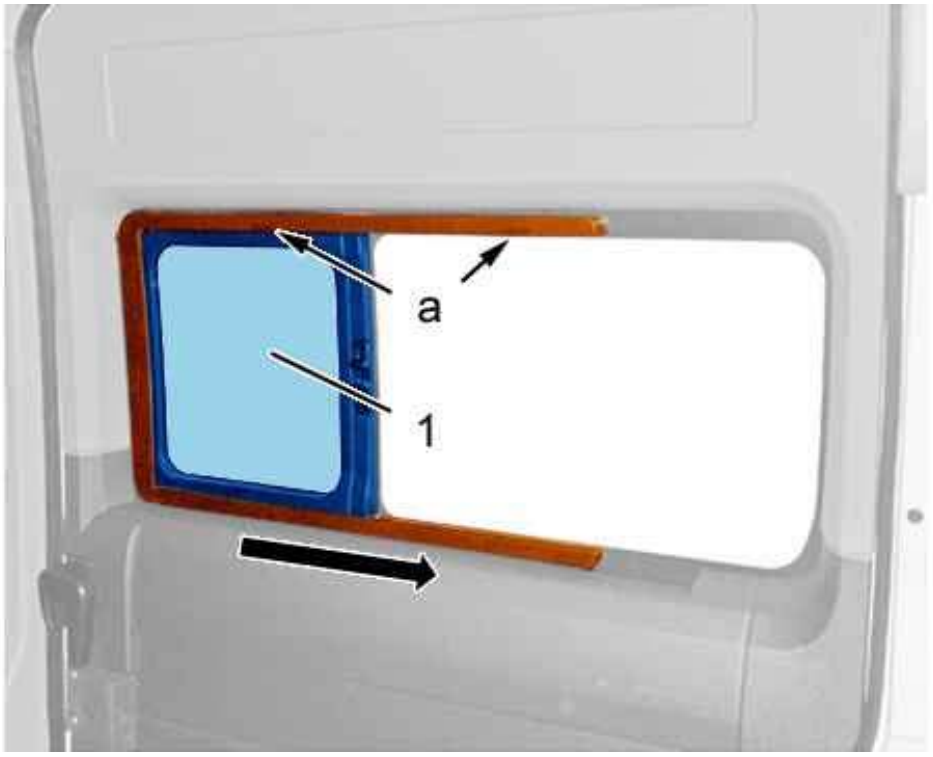

Figure : C5CM025D

Withdraw the trim covers (at "a").
Open the sliding side door moving window (1) (following the arrow).

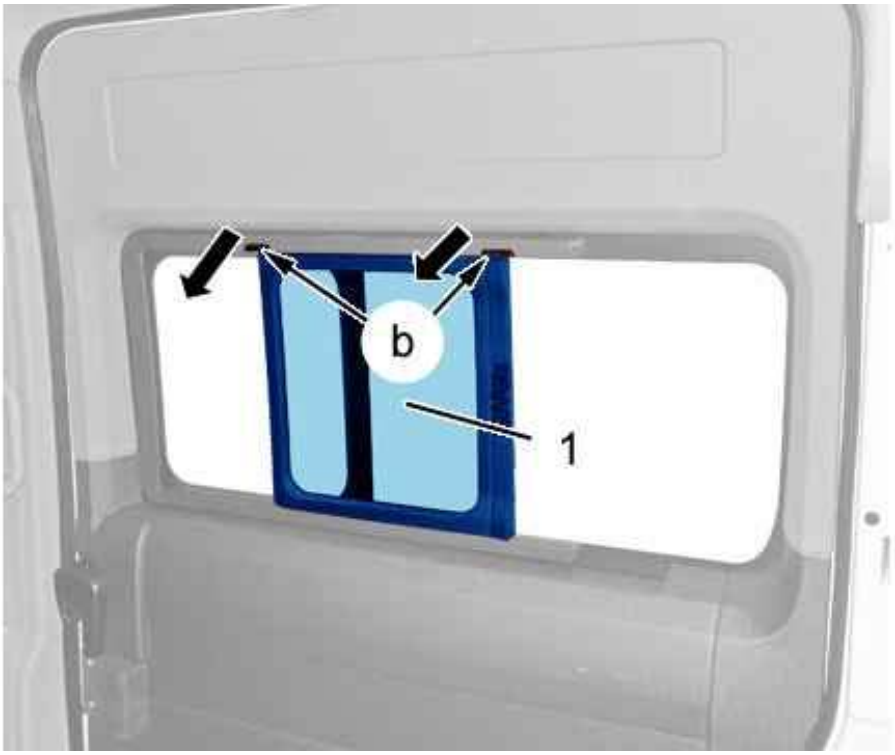

Figure : C5CM026D

Detach the moving window (1) through the openings(at "b").

Remove the sliding side door moving window (1) (as per arrows).

2.2. Fixed glass

Remove the sliding side door trims .

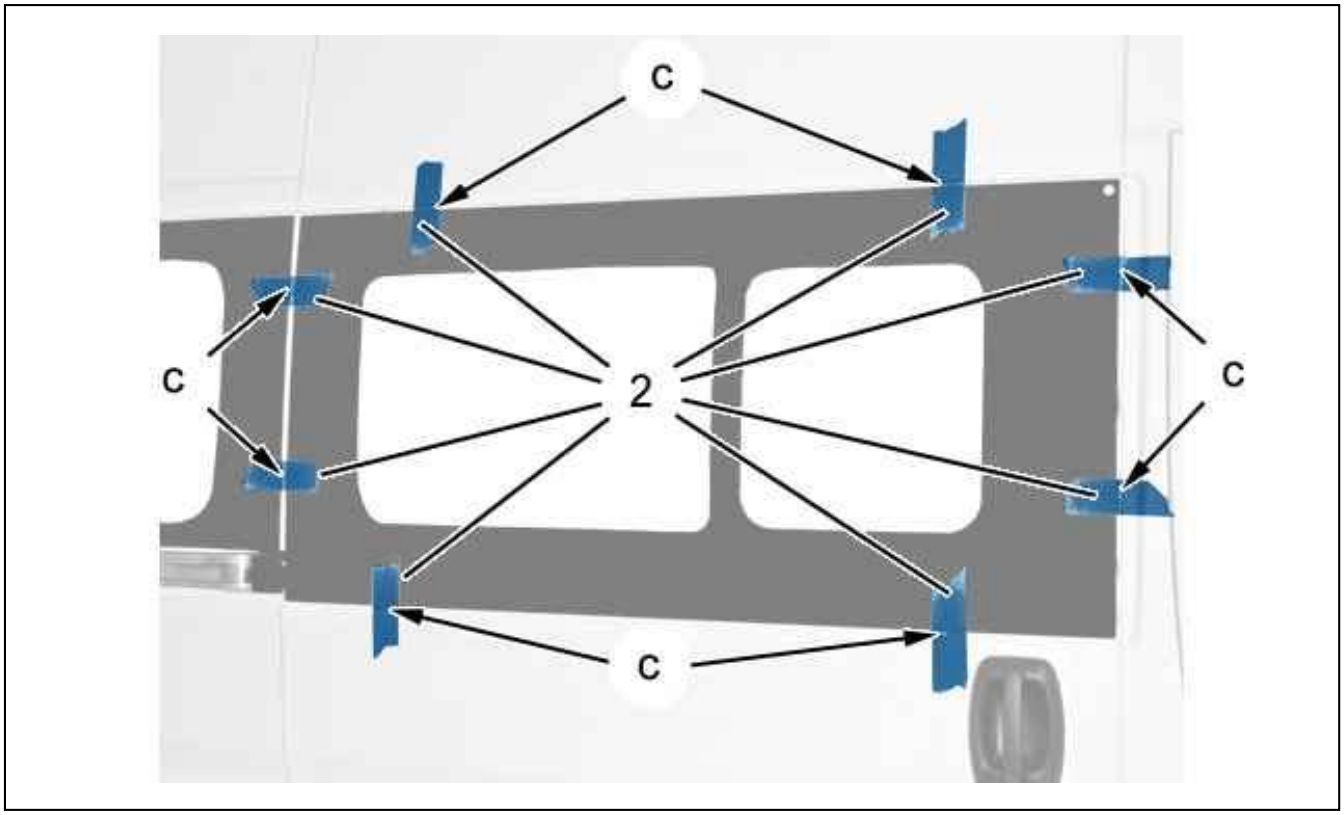

Figure : C5CM027D

N.B. : If the window is to be reused, align it and affix adhesive tape (2)(at "c").

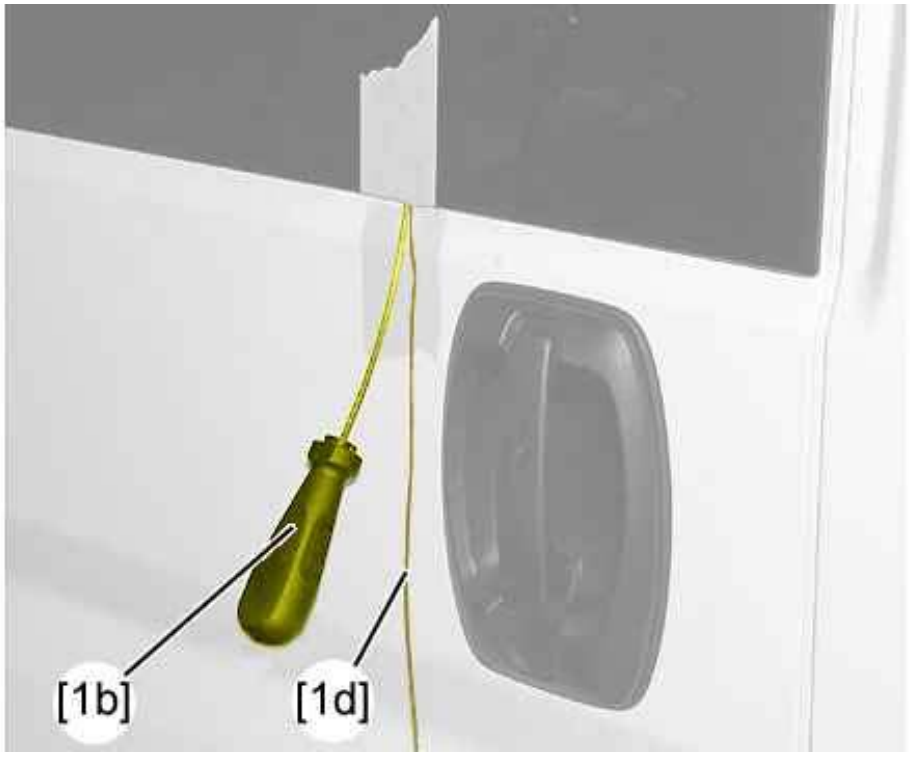

Figure : C5CM028D

Pass the awl [1b] through the bead of sealing adhesive, from the inside towards the outside.
Attach the cutting wire [1d] to the awl [1b].
Pass the cutting wire [1d] inside the vehicle.
Leave a sufficient length to permit fixing of the handles [1e].
Install the handles [1e] at each end of the cutting wire [1d].

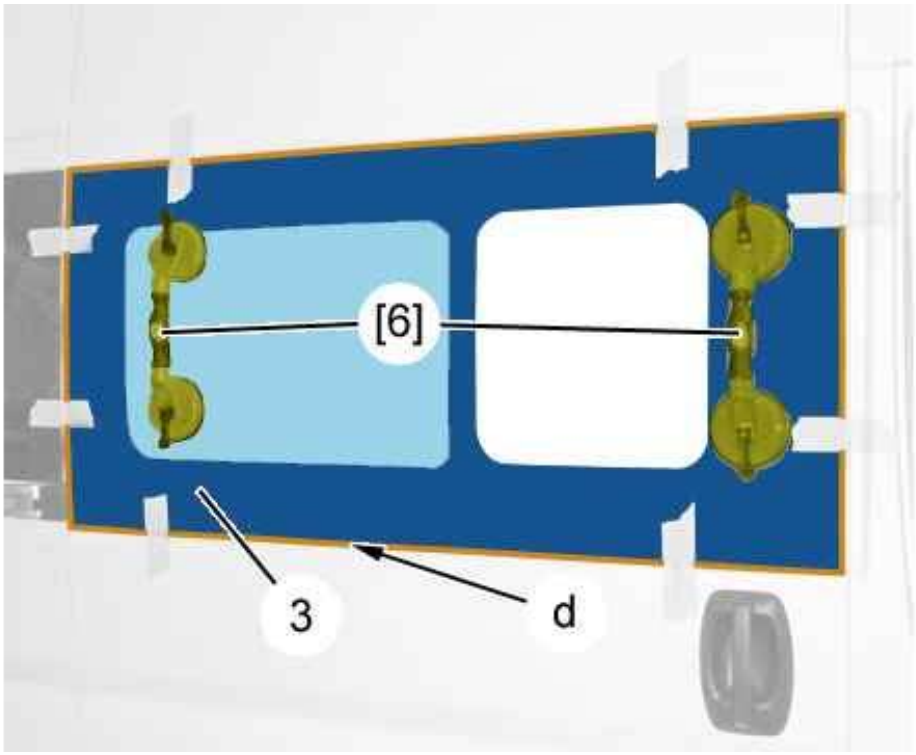

Figure : C5CM029D

Position : The double articulated suction pads [6].
Two people are required to perform the following operation.
The indexing pins must be cut.
Cut the sealing adhesive (at "d").

N.B. : At the slightest resistance of the wire while cutting, slacken it and assist it in passing the obstacle (Suppor shims, excessive thickness of the bead of adhesive or join between panels).

Remove : The sliding side door window (3) ; Using the double hinged suction cups [6].

3. Cleaning

3.1. Preparation : Side sliding door window

Reusing the sliding side door window :

- Fit the electric knife [2] with the blade [3]
- Remove the adhesive sealing bead
- Remove any dust using a clean cloth
- Only apply the primer to the zones laid bare

Fitting a new sliding side door fixed window :

- Degrease the edge of the glass with the degreaser
- Apply the glass primer provided in the bonding kit part number "A3"

N.B. : Only apply the primer to the zones laid bare.

3.2. Preparation of the aperture

On the remains of the bead of sealing adhesive :

- Fit the electric knife [2] with the blade [3]

- Remove the adhesive sealing bead
- Remove any dust using a clean cloth

On the new component :

- Degrease the aperture
- Apply the metal primer provided in the bonding kit part number "A3"
- Allow to dry for 10 mn

4. Refitting

4.1. Reusing the sliding side door window

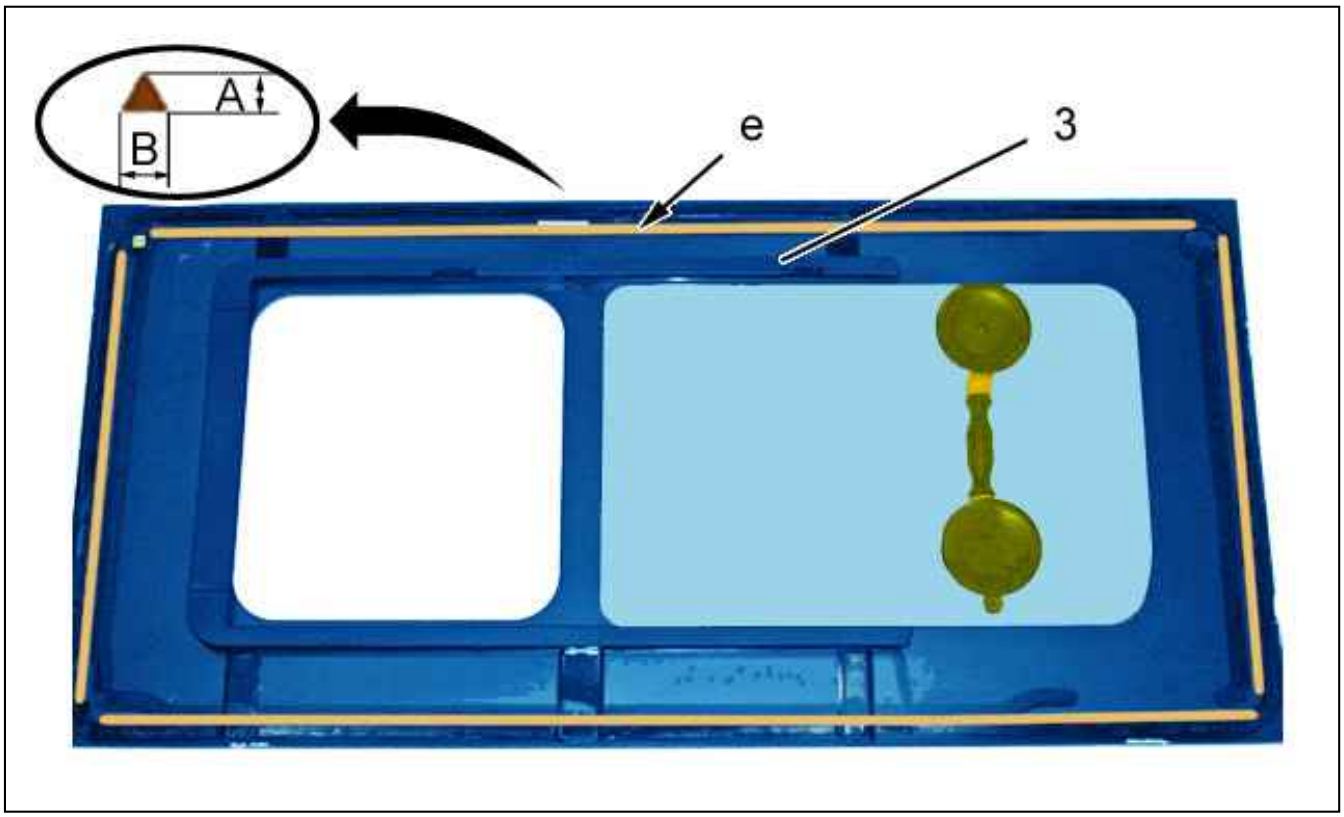

Figure : C5CM02AD

"A" = 12 mm .
"B" = 8 mm .
Cut the nozzle in triangular section to obtain a bead of sealing adhesive "B" wide and "A" deep.

ESSENTIAL : Always replace : The faulty seals.

Apply a bead of sealing adhesive to the periphery of the sliding side door (3) window (at "e") (using tools [4] or [5]).

ESSENTIAL : Use of the two part product: the time for fitting the window on the vehicle and the start of extrusion of the sealing adhesive is 5 minutes.

Refit : The sliding side door window :

- Using the double hinged suction cups [6]
- Using adhesive tapes (2)

Press gently on the periphery of the sliding side door (3) fixed window .

Clean the sliding side door fixed window and its periphery .

4.2. Fitting a new sliding side door fixed window

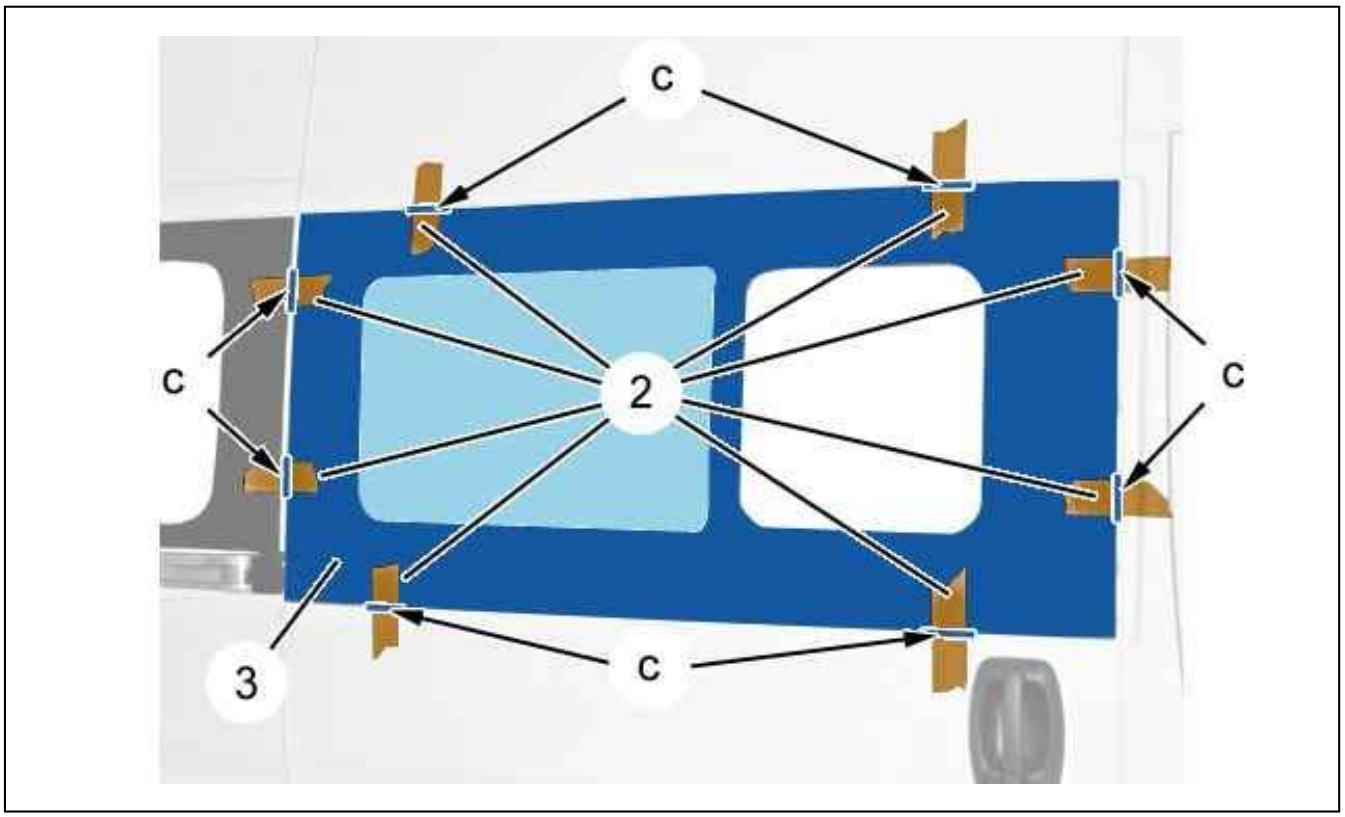

Figure : C5CM02BD

Test fit the sliding side door (3) window.
Position the adhesive strips (2).
Cut the tape (as "c").
Remove : The sliding side door window (3).
Apply a bead of sealing adhesive to the periphery of the sliding side door (3) window (at "d") (using tools [4] or [5]).

ESSENTIAL : Use of the two part product: the time for fitting the window on the vehicle and the start of extrusion of the sealing adhesive is 5 minutes.

Refit : The sliding side door window :

- Using the double hinged suction cups [6]
- Using adhesive tapes (2)

Press gently on the periphery of the sliding side door (3) fixed window .
Clean the sliding side door fixed window and its periphery .

ESSENTIAL : Observe the vehicle immobilisation time following fitting of the windscreen recommended by the suppliers of the products used.

Refit : The wind-down (Proceed in the reverse order to removal).
Continue the fitting operations in the reverse order to removal.
Check the sealing of the sliding side door (3) fixed window .
Clean the sliding side door fixed window and its periphery .

REMOVING - REFITTING : STEP

ESSENTIAL : Observe the safety and cleanliness recommendations.

ESSENTIAL : Deactivate the pneumatic suspension before lifting the vehicle (2 or 4 post lift, workshop jack or vehicle jack).

1. Recommended tools

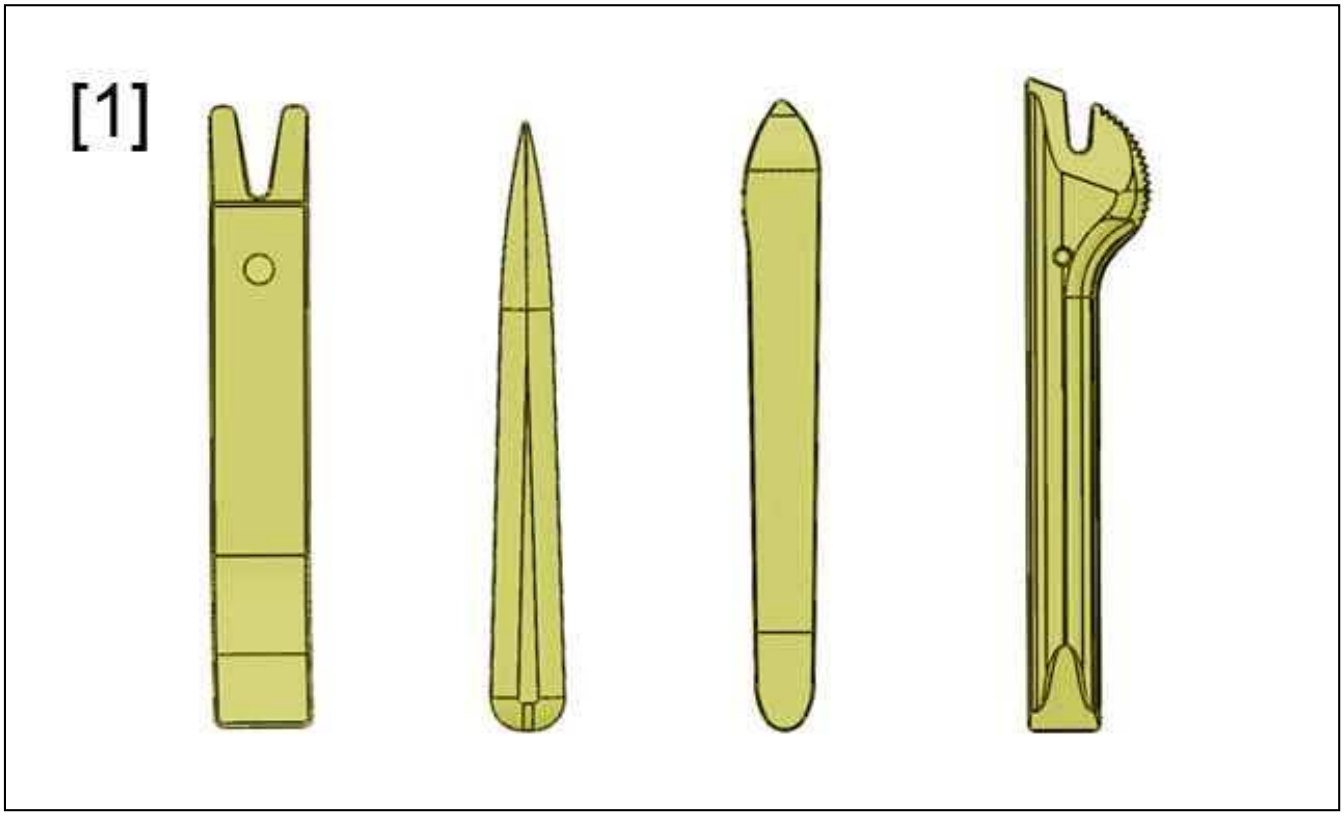

Figure : E5AP30WD

[1]Stripping tools (-).1350-ZZ.

2. Removing

Perform the following operations :

- Switch off the ignition
- Wait 3 minutes before disconnecting the battery
- Disconnect the battery

Lift and support the vehicle.

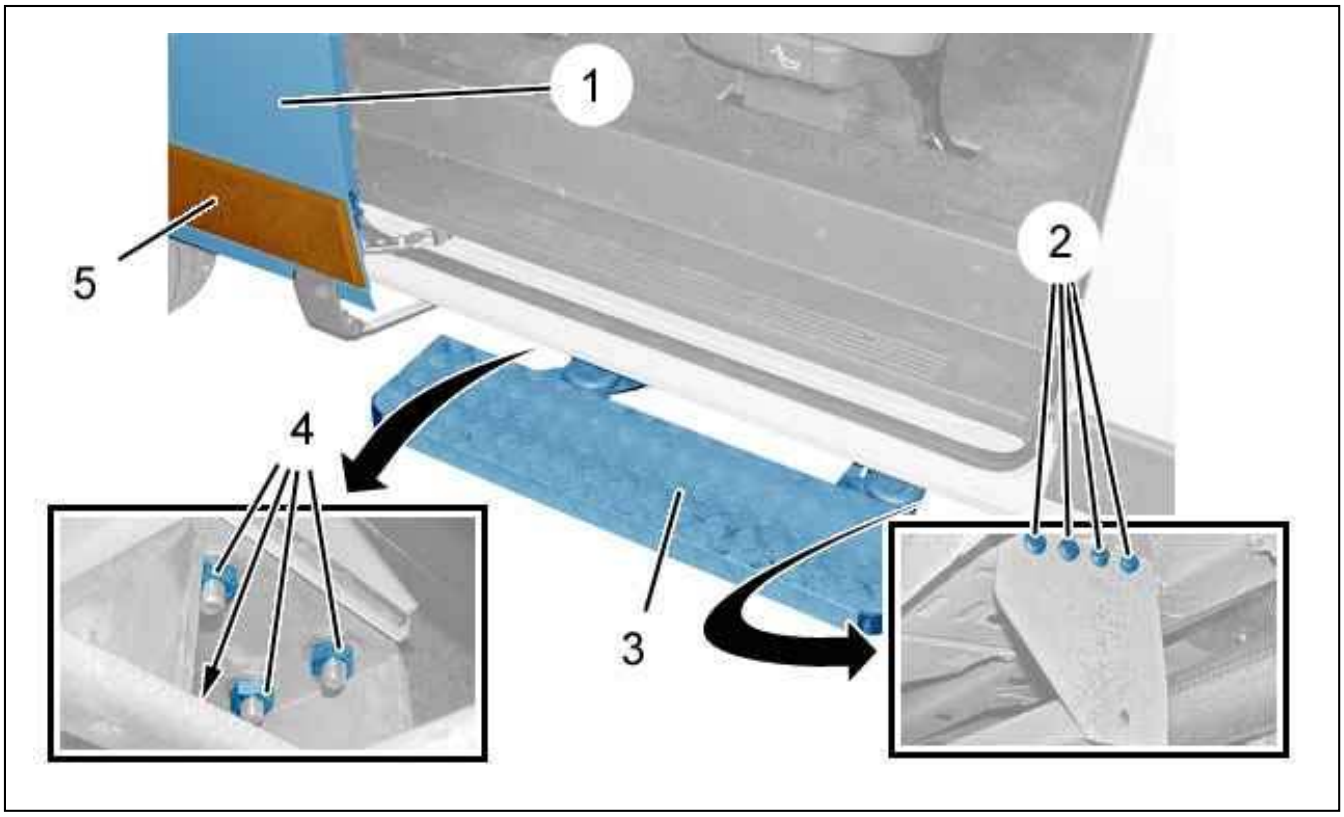

Figure : C4CM0U8D

Open the sliding side door(1).
Remove the bolts (2).
The nuts (4) .
Detach : The footboard (3).
Remove the surround (5) (The side sliding door).

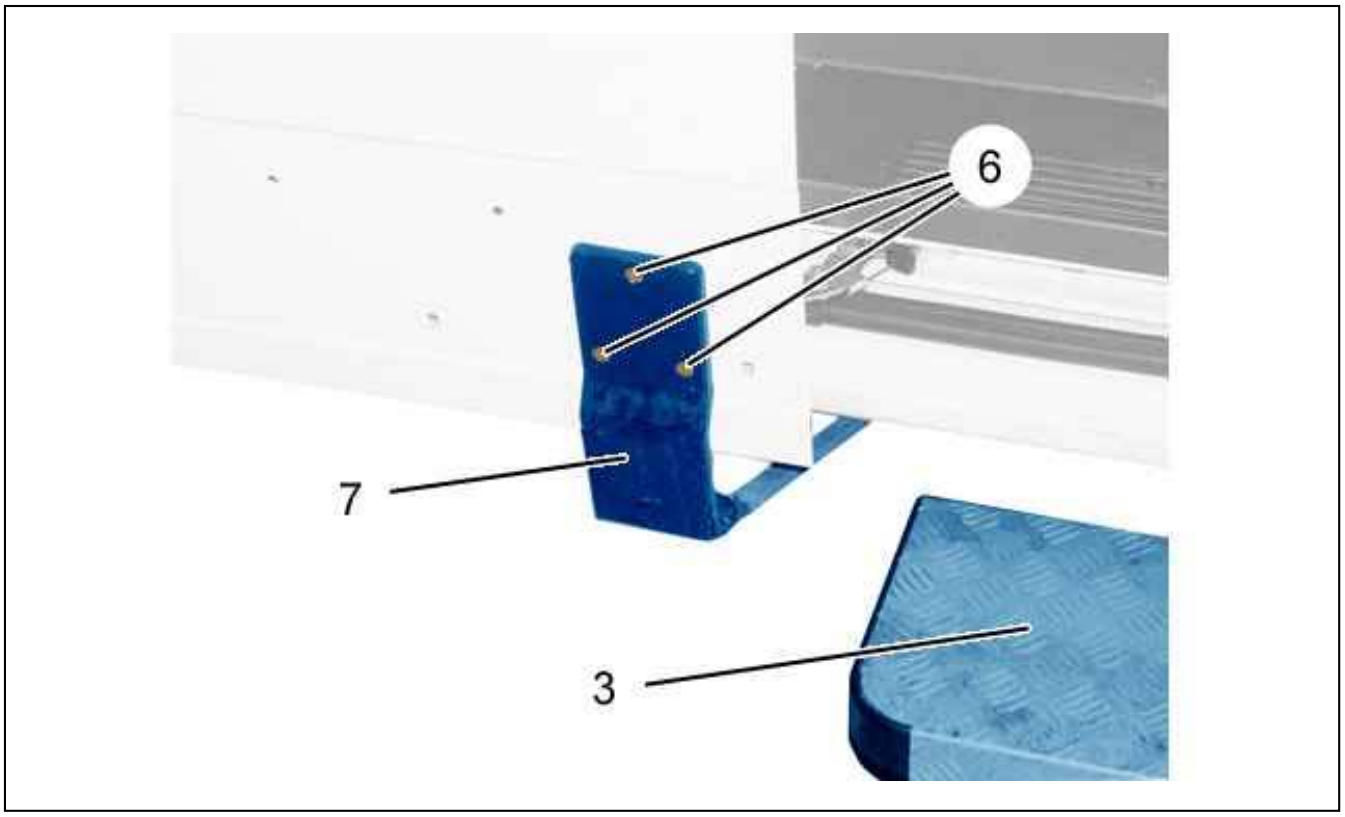

Figure : C4CM0U9D

Remove the bolts (6).
Detach : The step arm (7).
Remove : The footboard (3).

3. Refitting

Partially stripped the sliding side door to refix the step harm (7) .
Proceed in the reverse order to removal.
Tighten :

- The bolts (2) to 2 ± 0,4 daN.m
- The nuts (4) to 2,4 ± 0,4 daN.m

Reconnect the battery.
Check the electrical operation of the equipment.

REMOVING - REFITTING : THE SIDE SLIDING DOOR

ESSENTIAL : Observe the safety and cleanliness recommendations .

1. Tooling

Tool	Reference	Designation
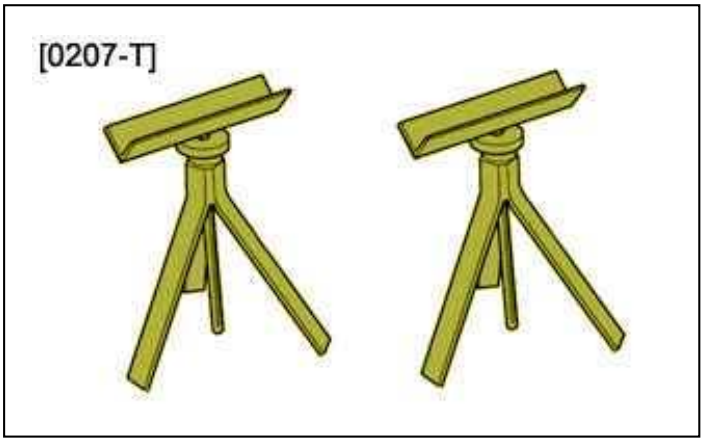 Figure : E5AB1A6T	[0207-T]	Set of door support stands

2. Removing

Detach the arm from the sill (according to equipment).

2.1. The side sliding door

ESSENTIAL : Two people are required to perform the following operation.

Support the door; Using tool [0207-T].

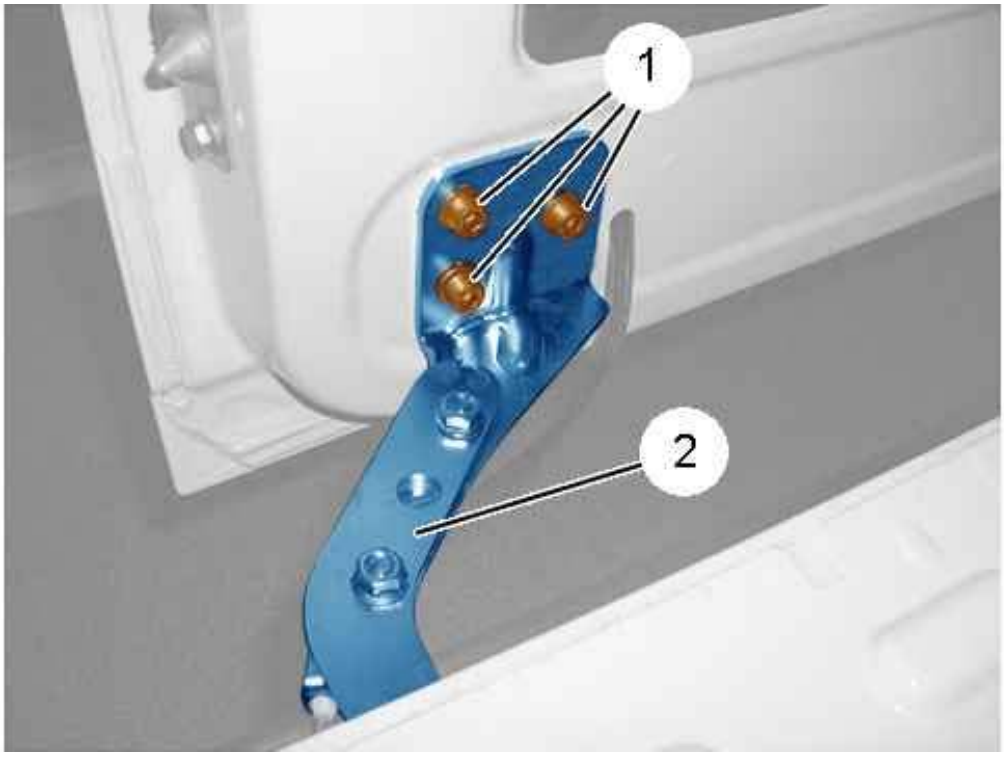

Figure : C5DP069D

Remove the sliding door lower carriage (2) fixing screws (1).

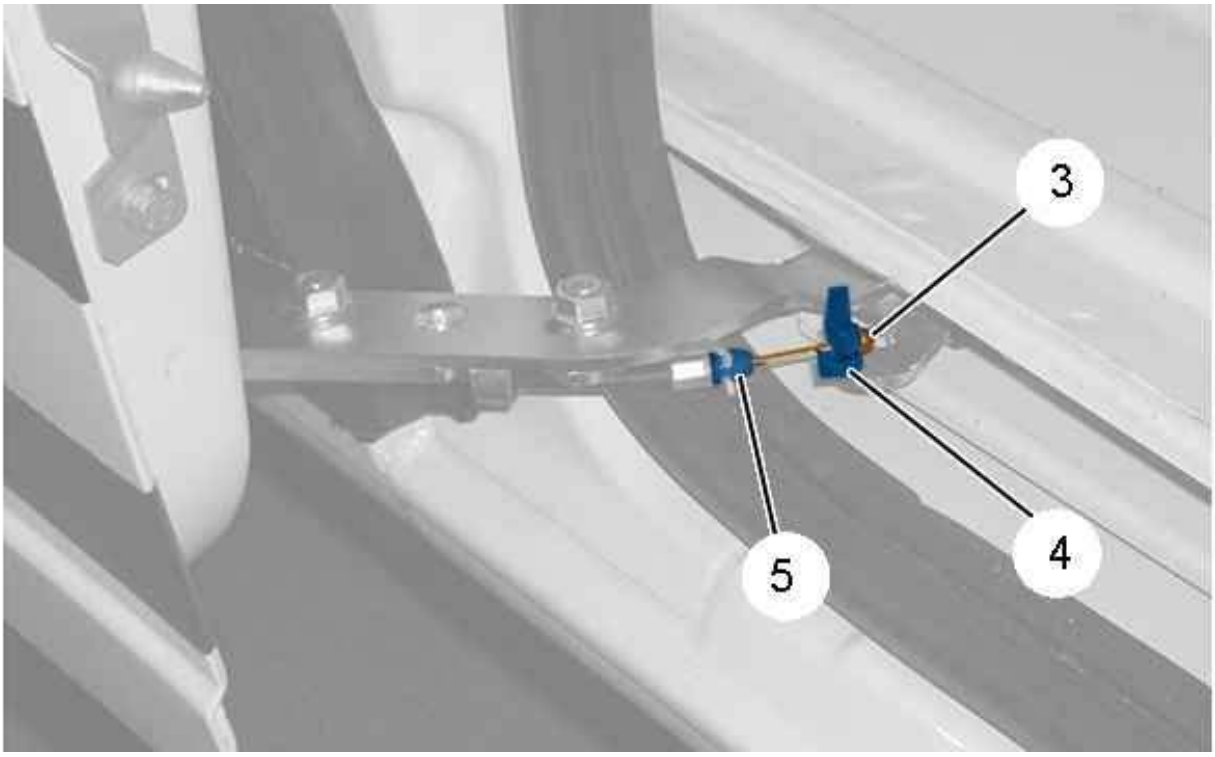

Figure : C5DP06AD

Detach the cable (3) from its anchorage (4).
Unclip the cable guide (5).

Remove the sliding door lower carriage (2).

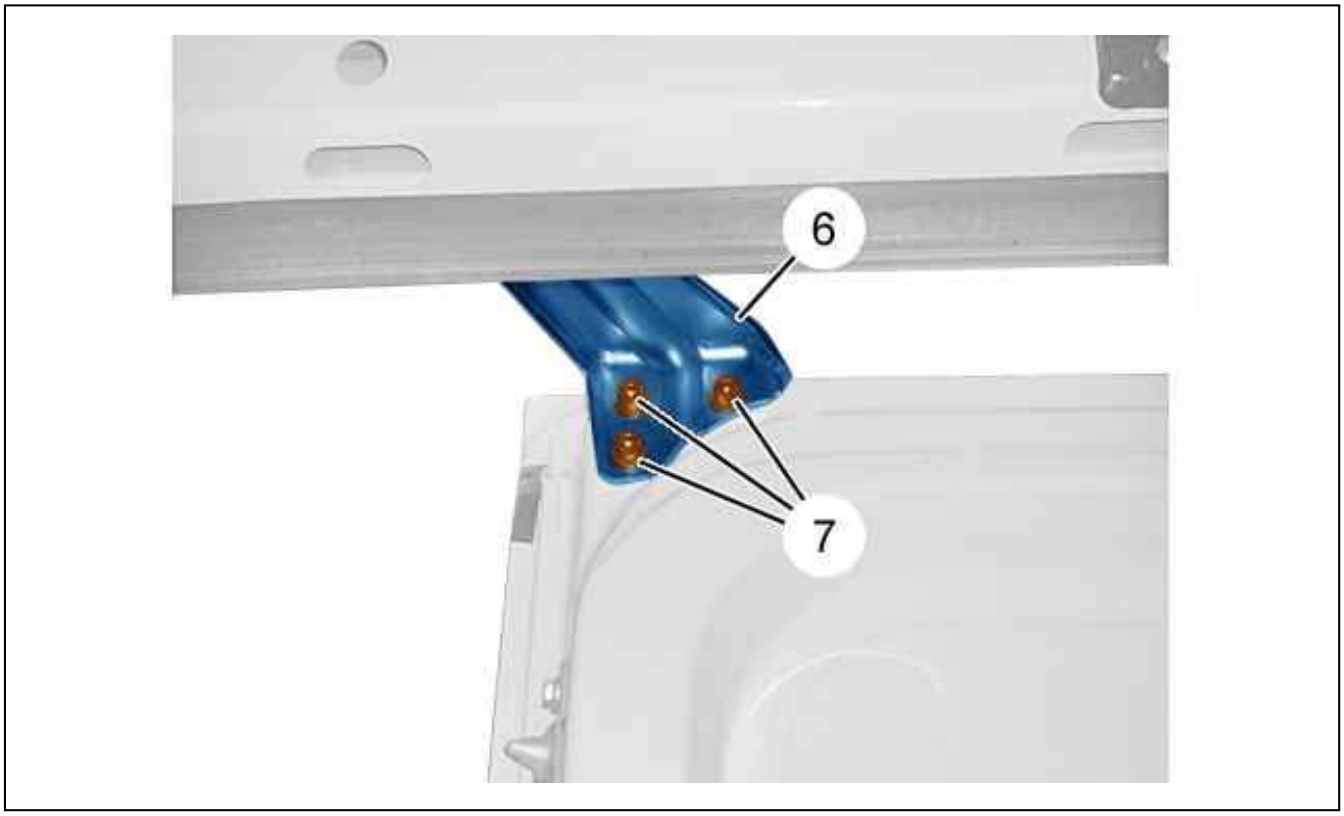

Figure : C4CG0NRD

Remove the sliding door upper carriage (6) fixing screws (7).

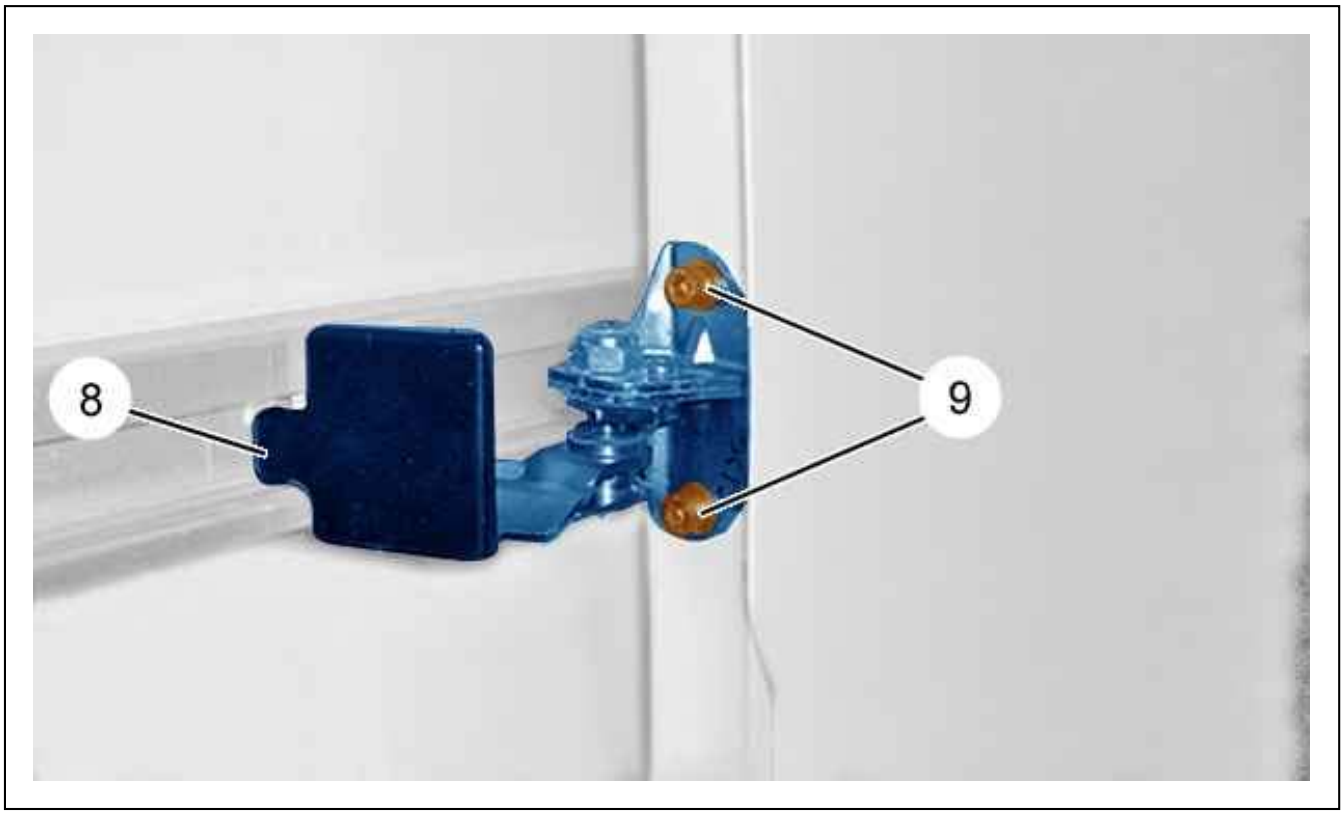

Figure : C4CG0NSD

Remove the sliding door central carriage (8) fixing screws (9).
Remove the sliding side door.

2.2. Central rail of the sliding side door

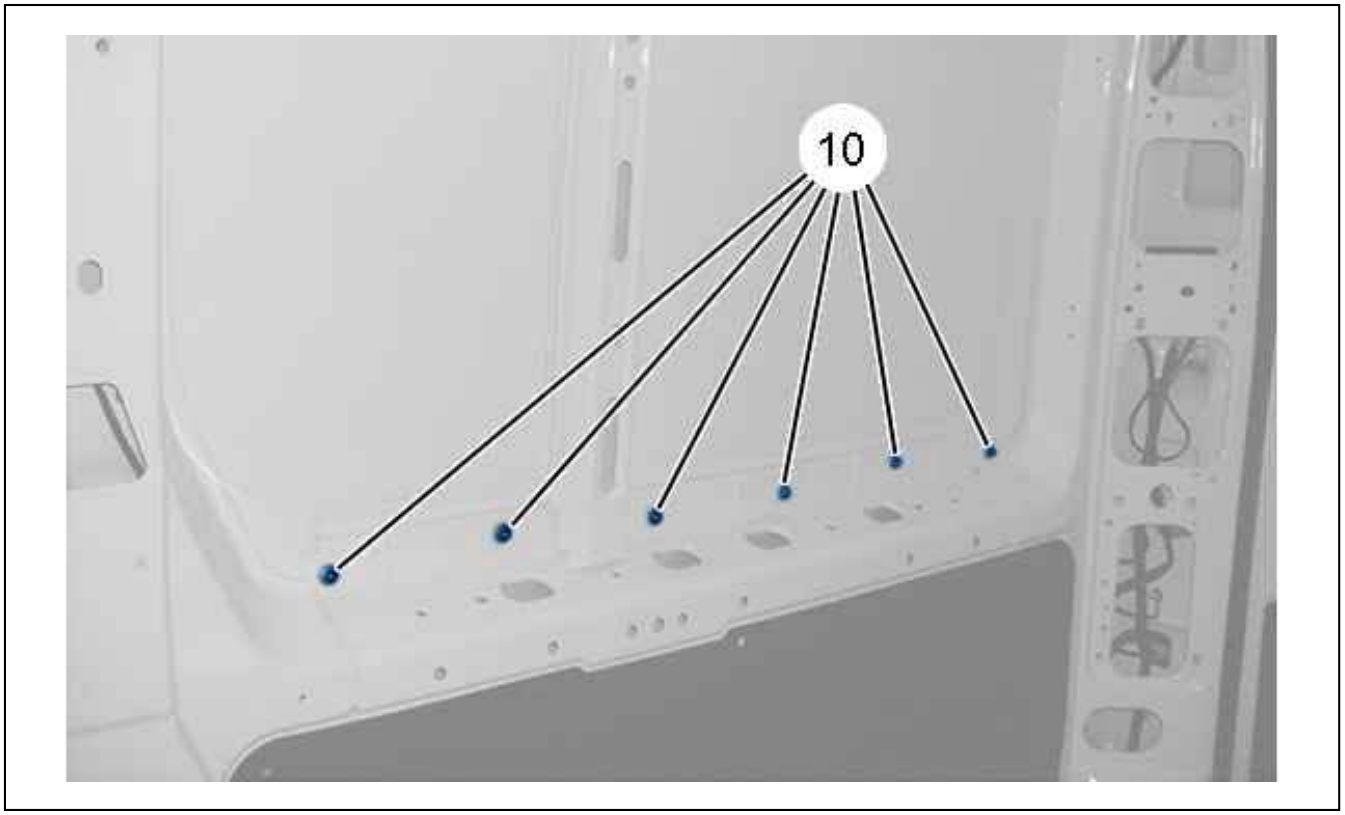

Figure : C4CP1NZD

Remove the bolts (10).

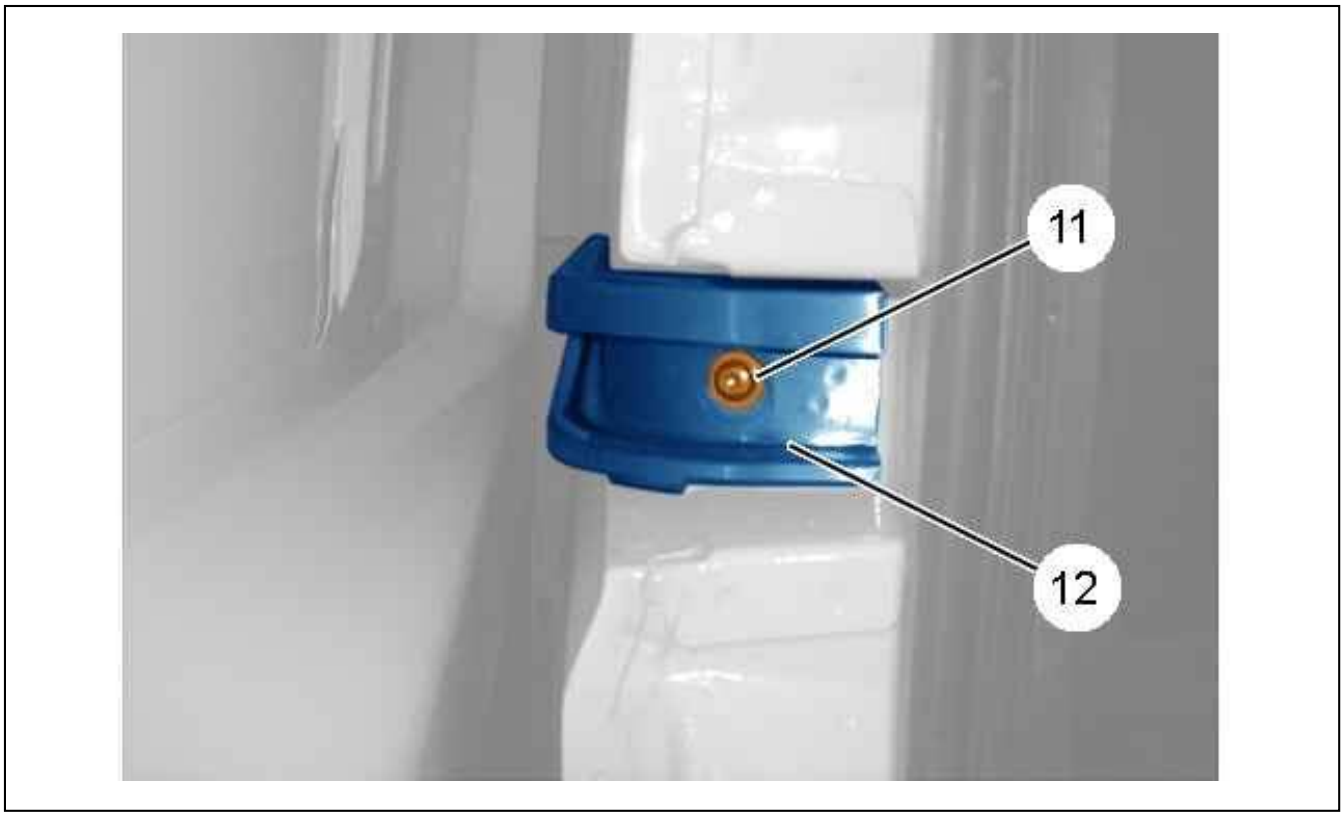

Figure : C4CP1P0D

Remove :

- The (11) bolt
- The central rail (12)

3. Refitting

Proceed in the reverse order to removal.
Check the operation.
Tighten the bolts (1), (7) and (9) to 2,5 m.daN.
Tighten the bolts (10) and (11) to 8 m.daN.

CAUTION : Perform the operations that are required following a reconnection of the ancillaries battery.

Reconnect the ancillaries battery.

4. Adjustments

Check the fits and clearances .

4.1. Upper sliding side door carriage

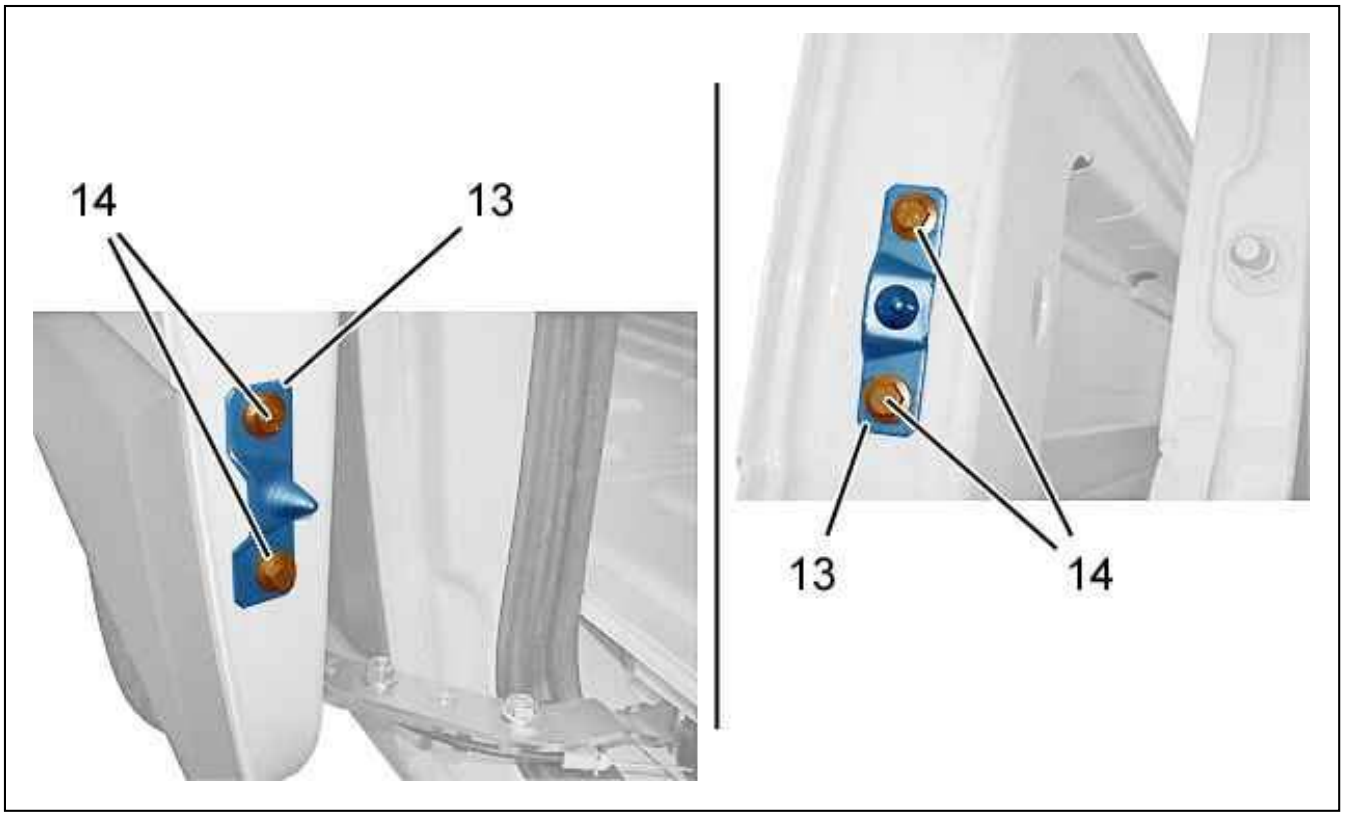

Figure : C4CG0NTD

N.B. : For an additional adjustment of the clearances of the sliding side door : Act on the sliding side door guide (13 bolts (14).

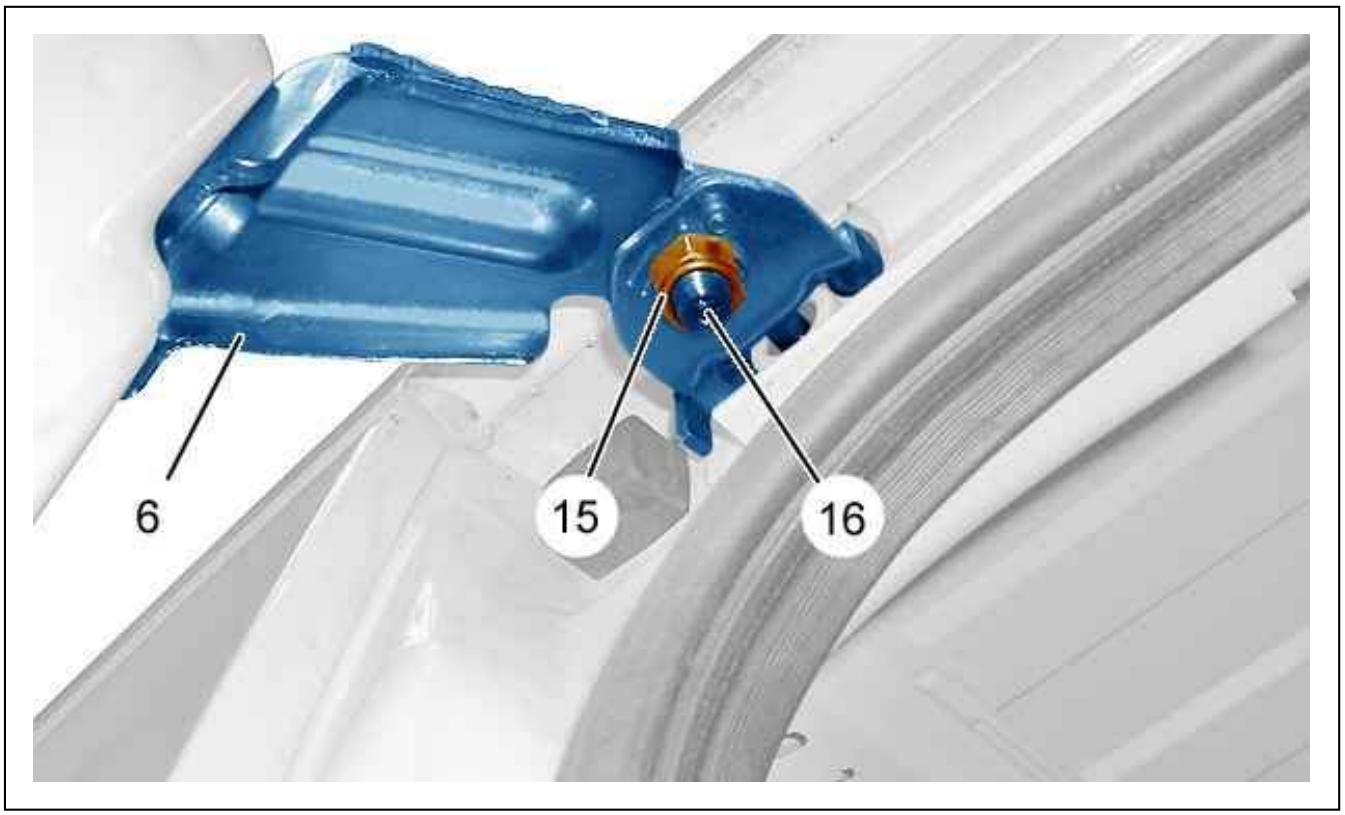

Figure : C4CG0TVD

CAUTION : Adjust the perpendicularity of the rollers of the upper carriage (6) in relation to the guide rail; by acting or the bolt (16) and the nut (15) of the upper carriage (6).

Tighten the nut (15) to 4,5 m.daN.

4.2. Sliding side door auxiliary lock striker

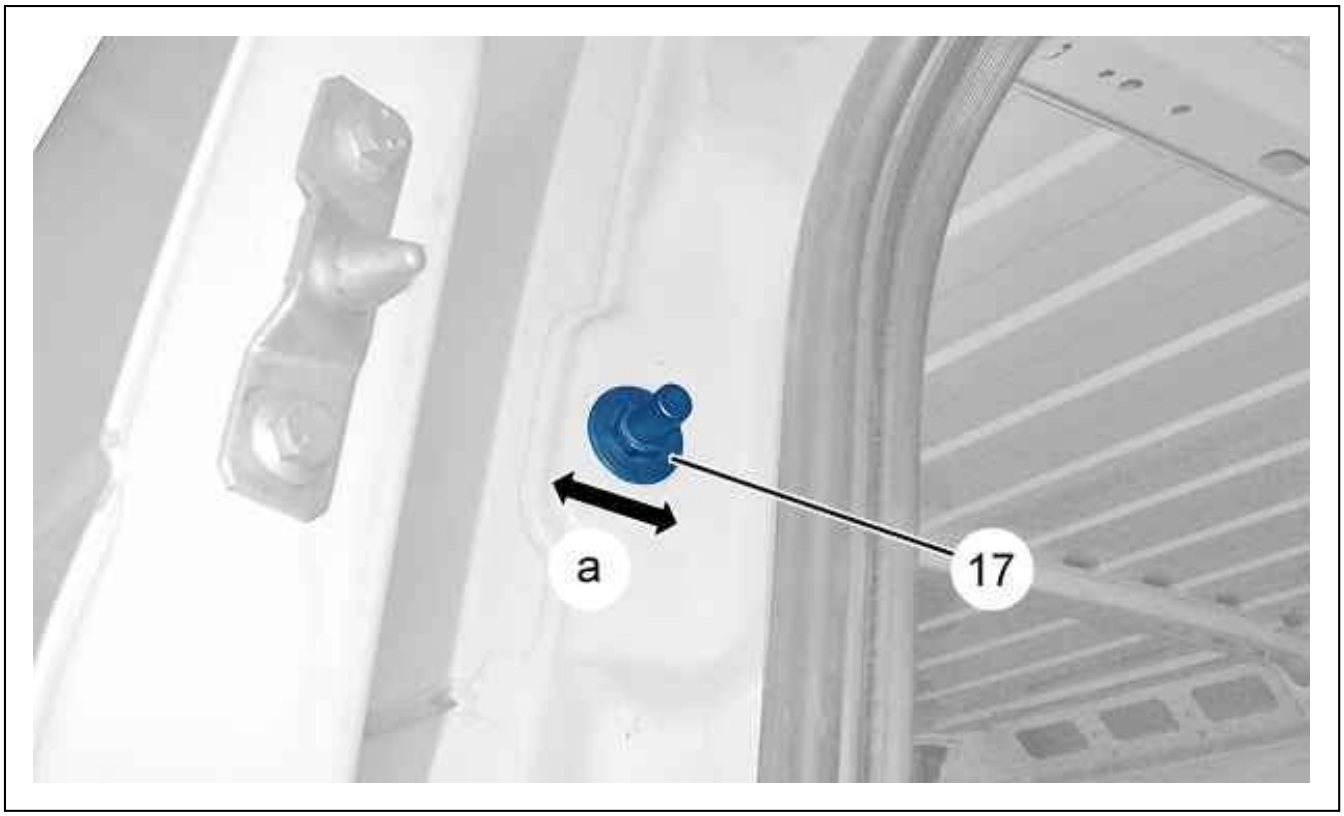

Figure : C4CG0TWD

N.B. : For an additional adjustment of the clearances of the sliding side door : Act on the sliding side door striker (17) In the direction of the arrow "a".

Tighten the striker (17) to 1,6 daN.m.

4.3. Central sliding side door carriage

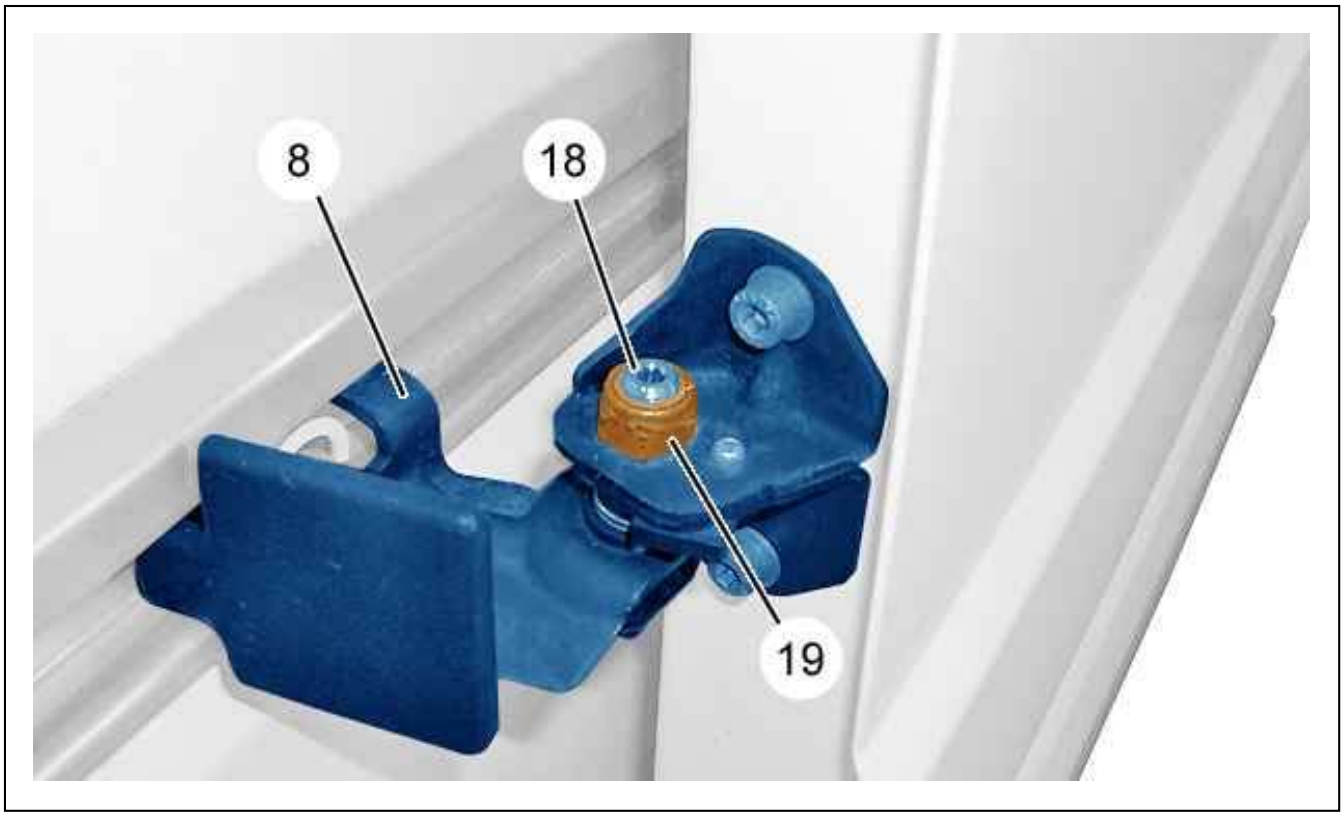

Figure : C4CG0TXD

CAUTION : Adjust the perpendicularity of the rollers of the central carriage (8) in relation to the guide rail; by acting or the bolt (18) and the nut (19) of the central carriage (8).

Tighten the nut (19) to 4,5 m.daN.

4.4. Sliding side door lock striker

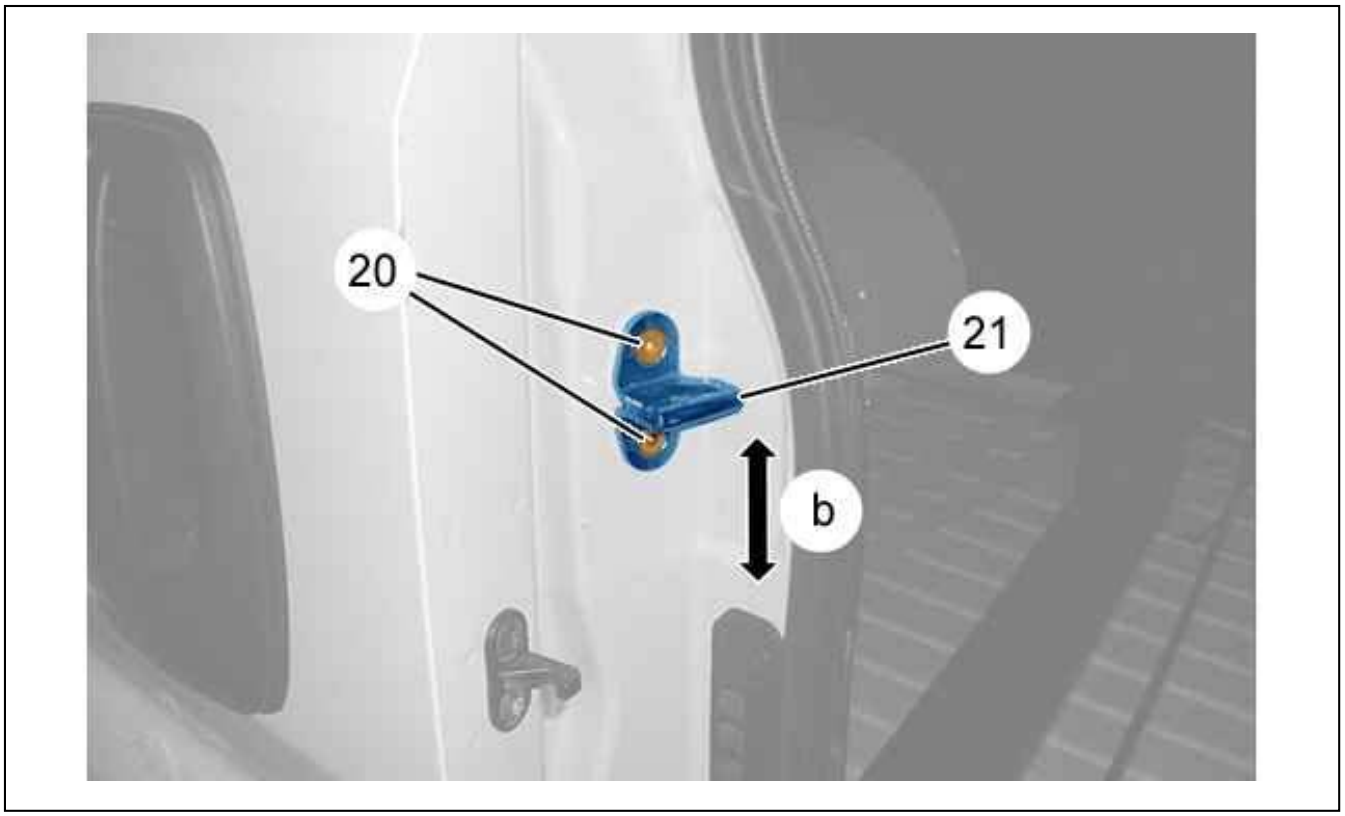

Figure : C4CG0TYD

Check that there is no sticking between the striker and the sliding side door lock; If there is, proceed as follows; Slacken the bolts (20) by 1/4 turn.
Move the lock striker (21) (In the direction of the arrow "b").
Once the adjustment is complete, tighten the fixing bolts (20) to 8 daN.m.

4.5. Sliding side door guides

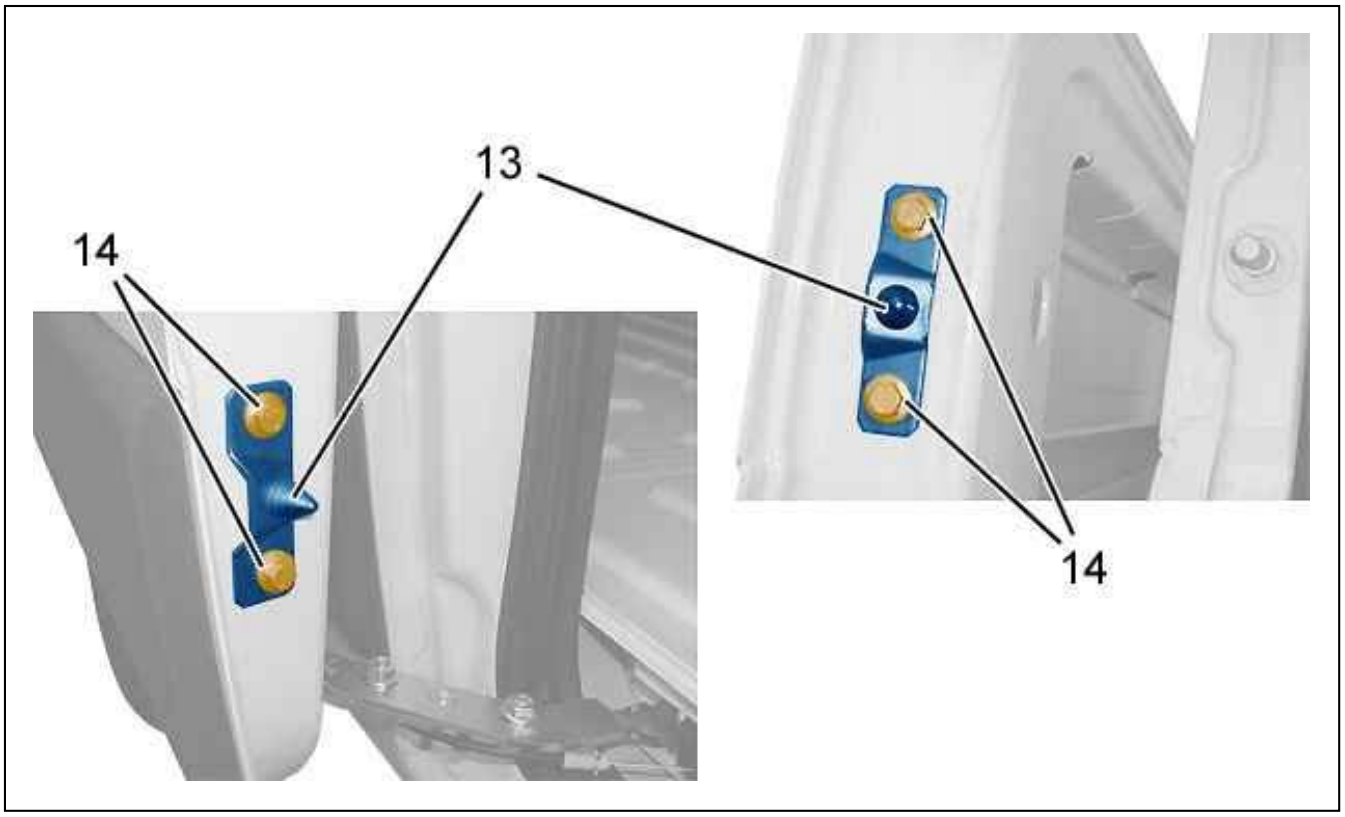

Figure : C4CG0RID

Tighten the bolts (14) of the guides (13) to 8 m.daN.

4.6. Sliding side door centralisers

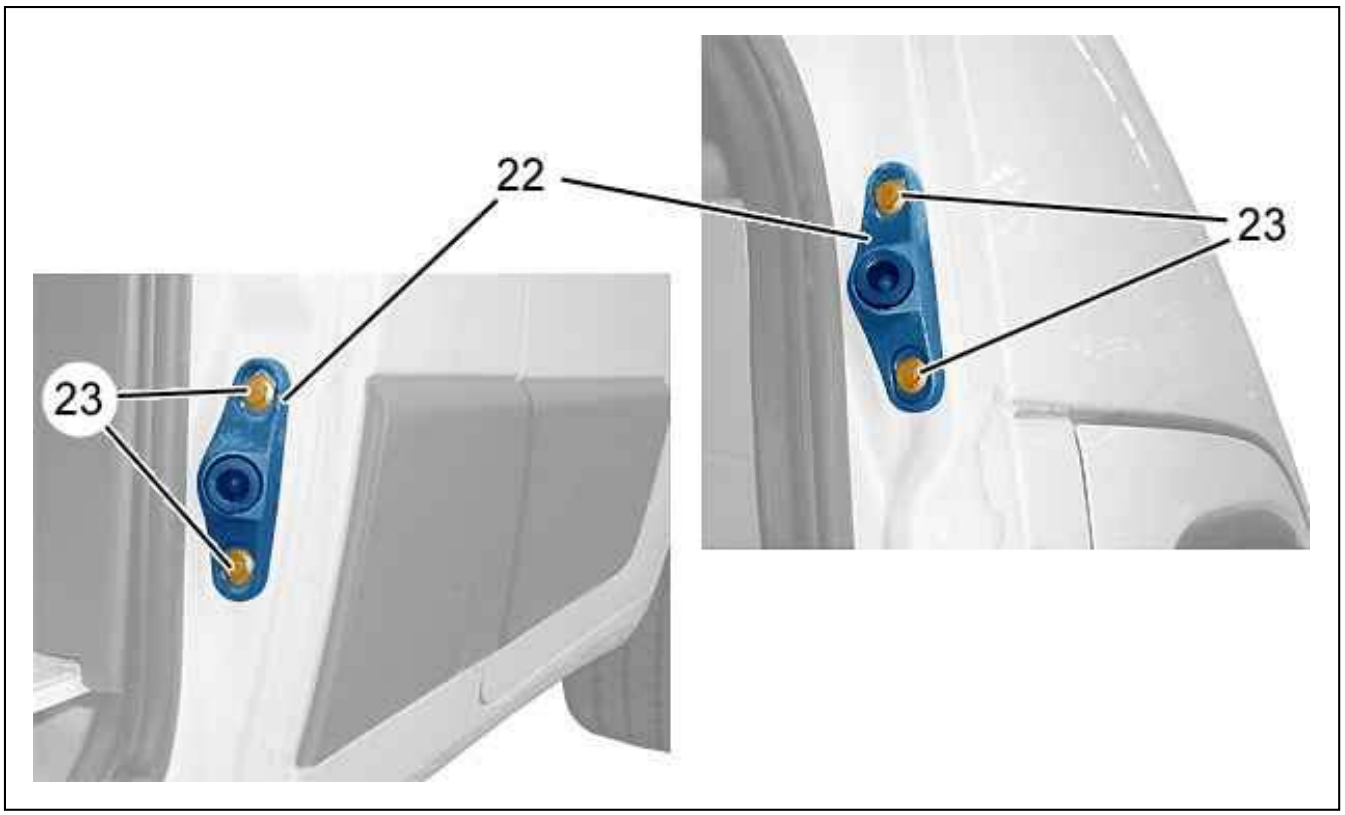

Figure : C4CG0RJD

N.B. : For an additional adjustment of the clearances of the sliding side door : Act on the bolts (23) and the centring pins (22) of the sliding side door carriage.

Adjust the clearances of the sliding side door: Using the bolts (23).
Tighten the bolts (23) to 8 daN.m.

4.7. Lower sliding side door carriage

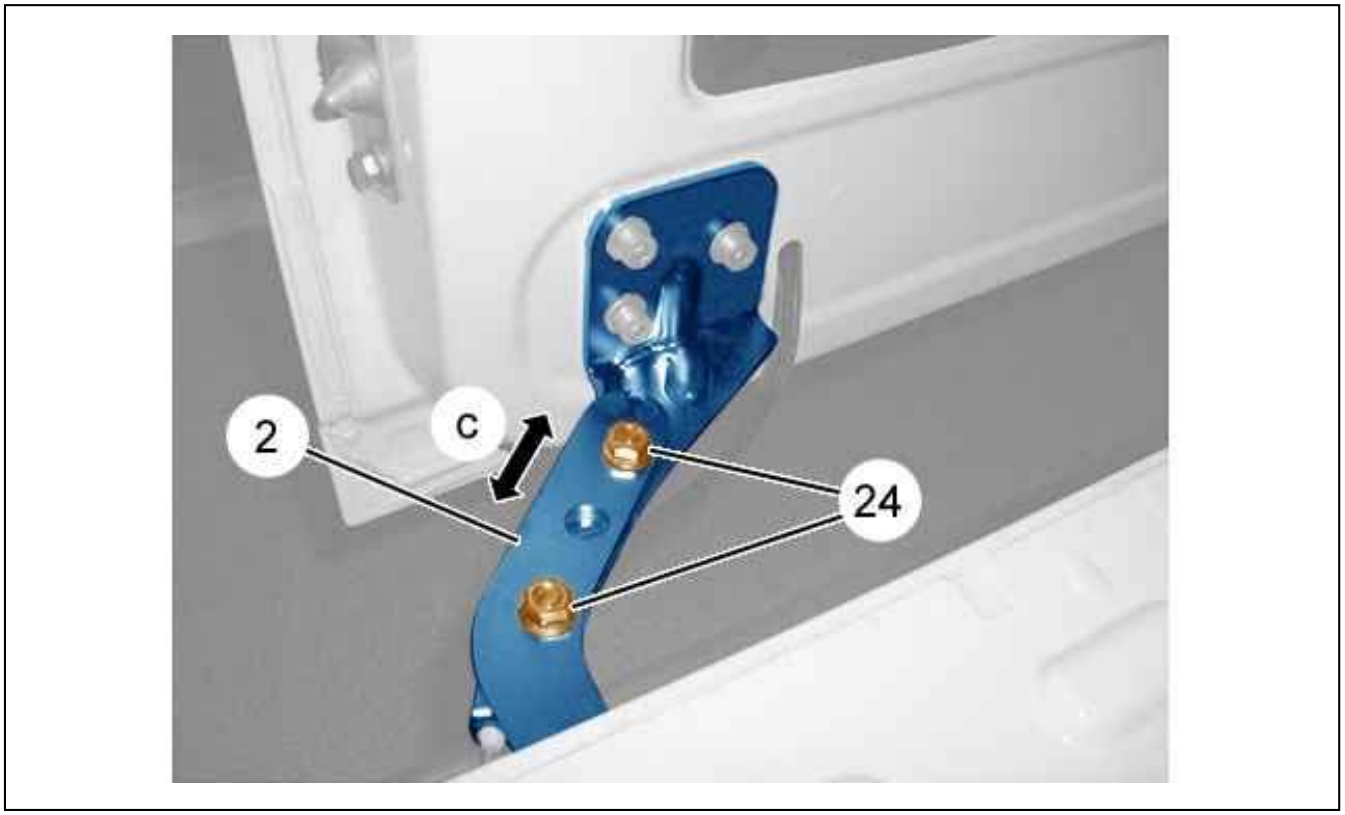

Figure : C4CG0TZD

N.B. : To adjust the sliding side door transversally : Act on the nuts (24) of the sliding door lower carriage (2).

Unscrew the nuts (24).
Adjust the clearances of the sliding side door (In the direction of the arrow "c") At ± 3 mm.
Tighten the nuts (24) to 2,4 daN.m.

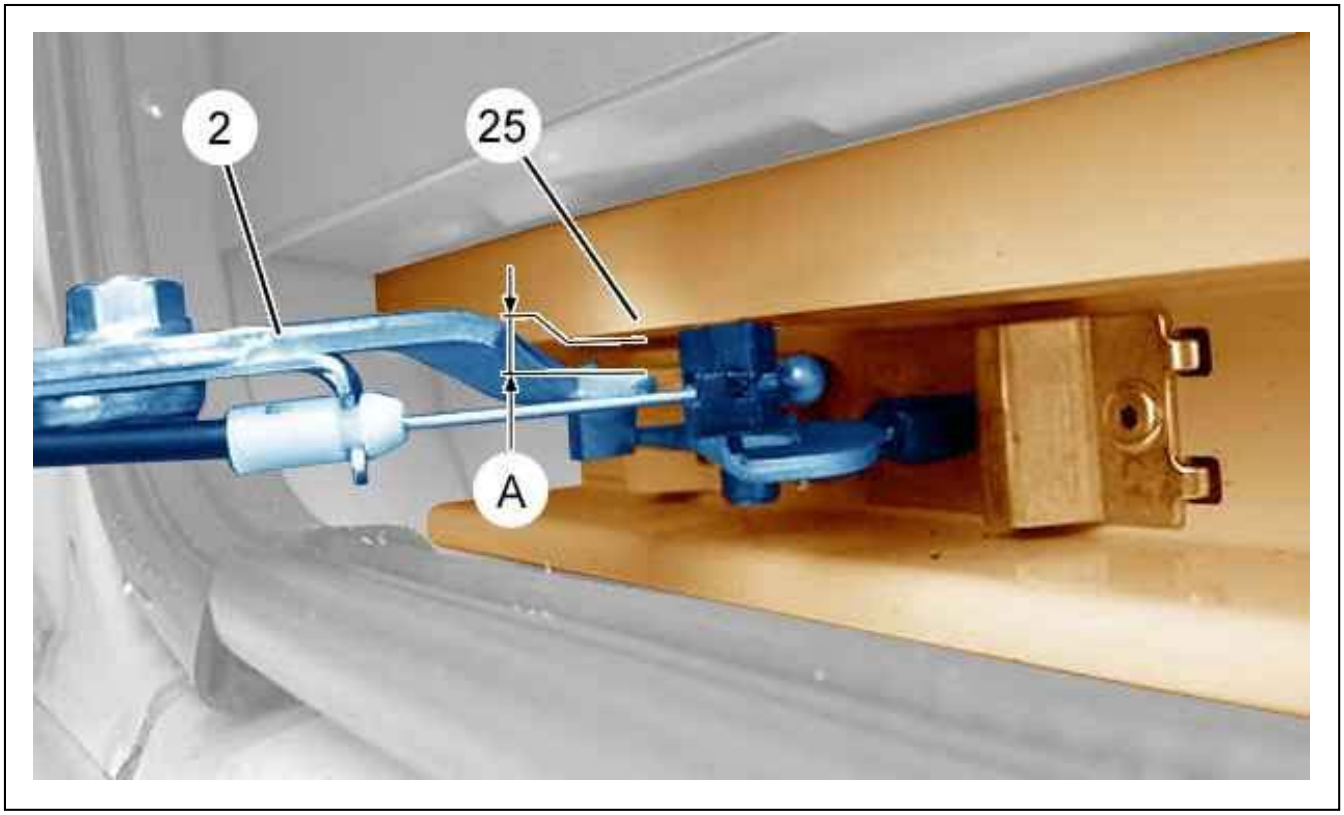

Figure : C4CG0RLD

N.B. : To adjust the sliding side door vertically : Slide the sliding side door the length of its travel.

Find the position for the sliding side door where you can measure the minimum clearance "A" between the bottom carriage (2) of the sliding side door and the edge of the rail (25).
Hold the sliding side door in this position.

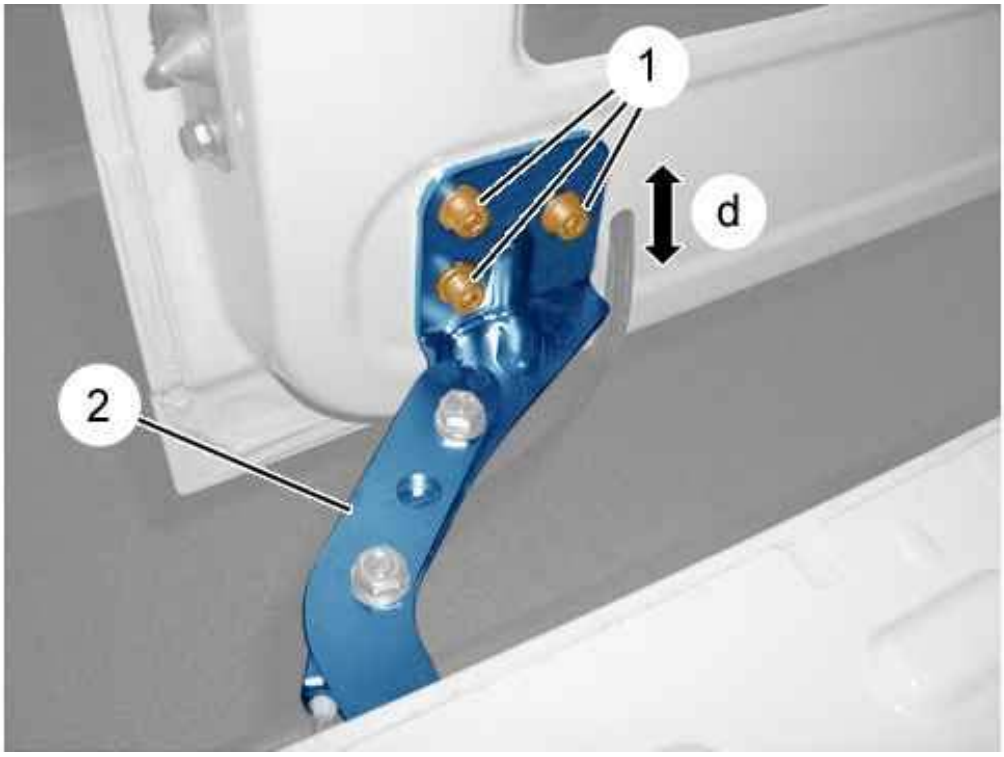

Figure : C4CG0U0D

N.B. : To adjust the sliding side door vertically : Act on the bolts (1) of the sliding side door lower carriage (2).

Slacken the screws (1) by 1/4 turn.
Adjust the clearances of the sliding side door (In the direction of the arrow "d").

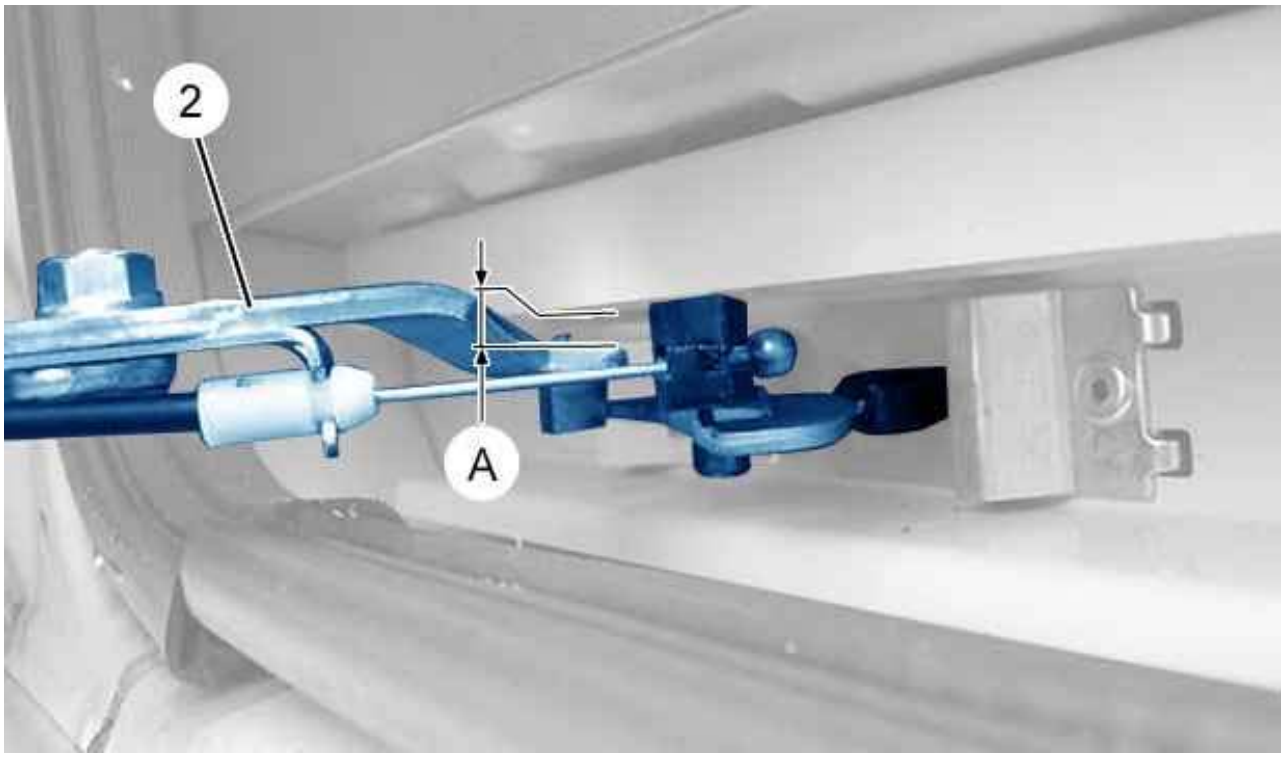

Figure : C4CG0RND

Adjust the height of the sliding door lower carriage (2), keeping to the dimension "A" = 2 mm maximum.
Move the sliding side door several times over its entire travel.
Check that the clearance "A" is never less than 2 mm at different points over the sliding side door travel.
If necessary, again adjust the sliding side door lower carriage (2).
Tighten the bolts (1) to 2,4 daN.m.
Check the fits and clearances .

4.8. Initialisation of the push button of the switch of the sliding side door

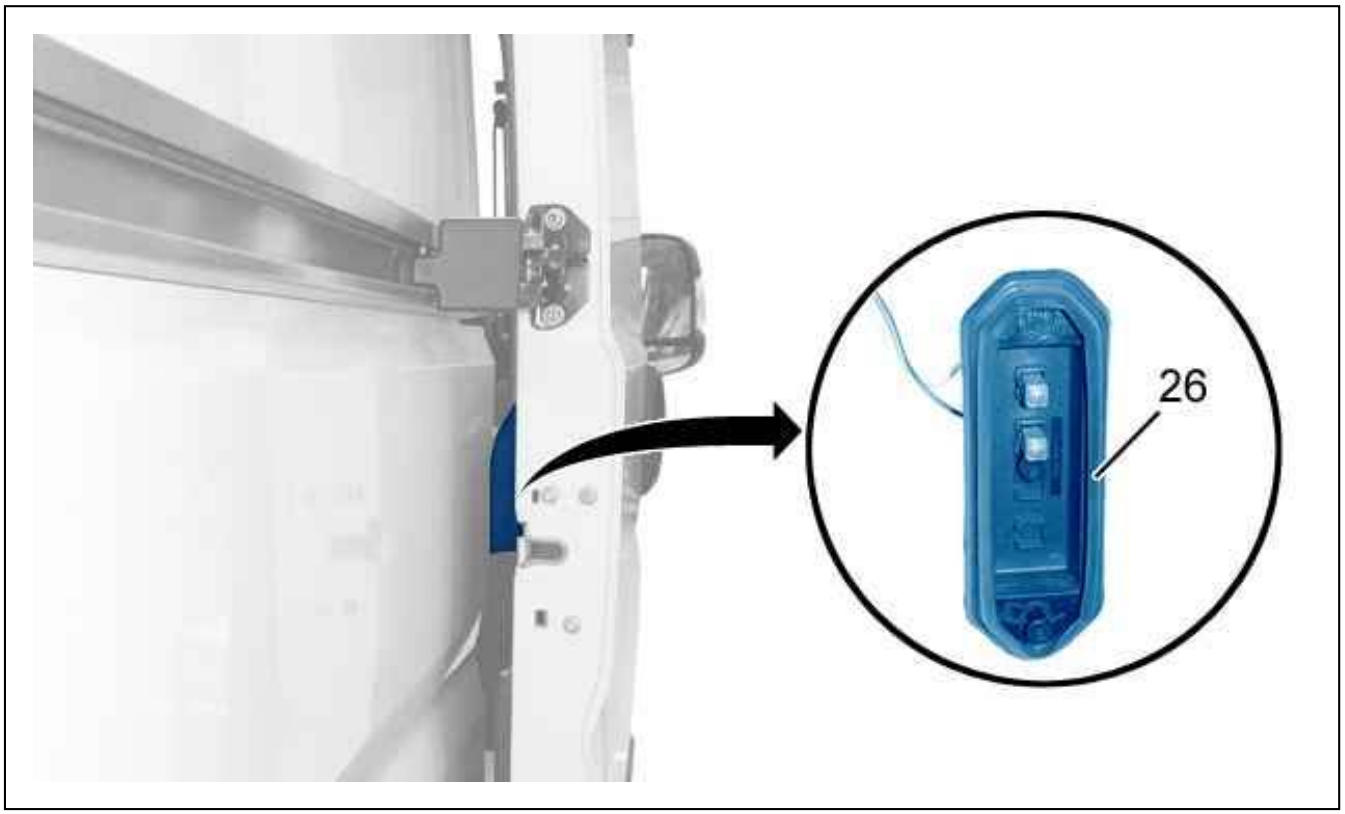

Figure : C4CG0ROD

Remove the switch (26) of the sliding side door .

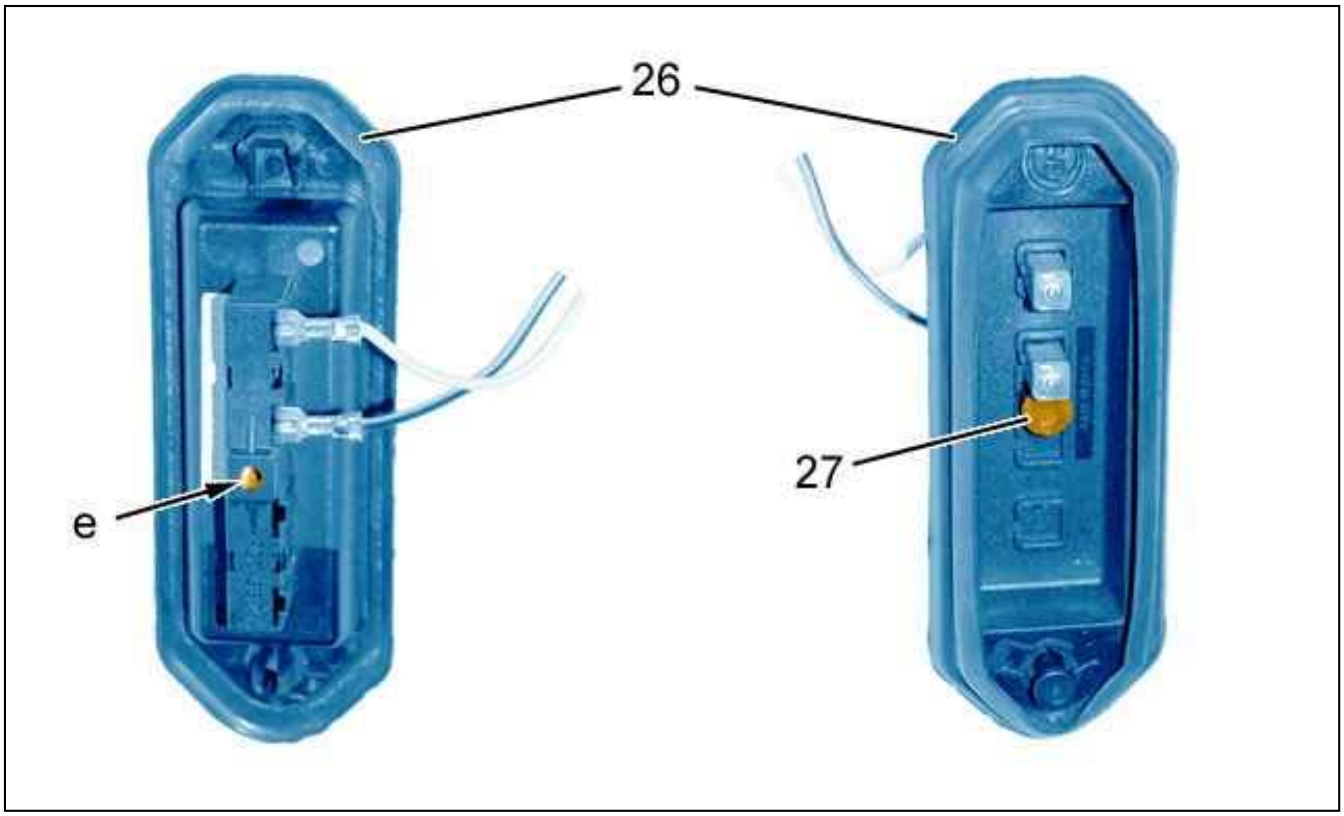

Figure : C4CG0U1D

To the rear of the switch of the sliding side door : Insert a 3,5 mm diameter drift (at "e").
Push the push button (27) gently to move it out a few teeth (During the operation the noise of the teeth can be heard).

N.B. : Do not force it excessively as the push button (27) can come out of the switch (26) of the sliding side door .

Refit the switch (26) of the sliding side door .
Close the sliding side door.

N.B. : Closing the sliding side door will automatically set the correct distance adjustment of the push button .

Check the operation of the following components :

- interior lamp
- Central locking
- Door open warning lamp

Check the operation of the different equipment.

REMOVING - REFITTING : SIDE SLIDING DOOR WINDOW

ESSENTIAL : Observe the safety and cleanliness recommendations.

1. Recommended tools

Glazing consumable .

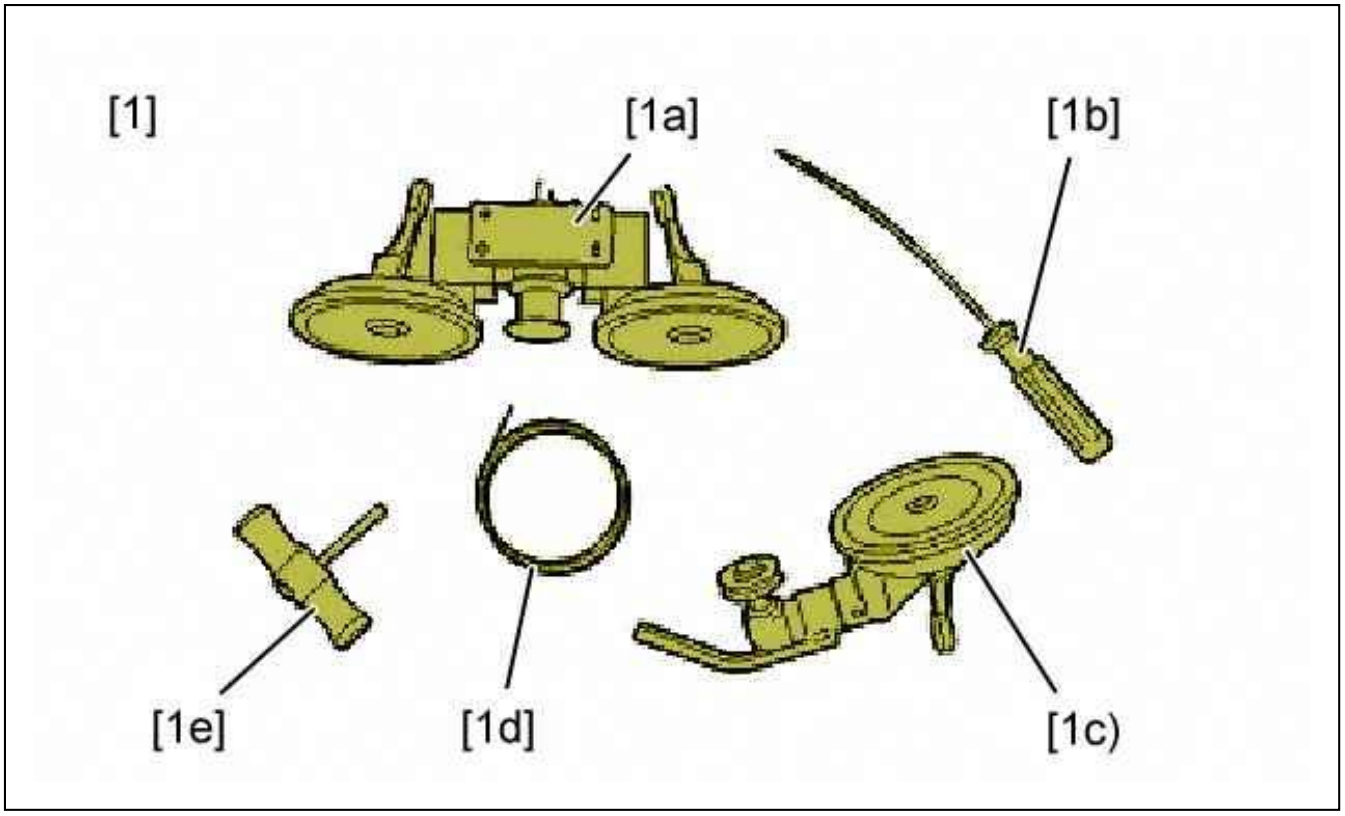

Figure : E5AP2ZQD

[1] Bonded windows removal kit (-).1354.
Composition of the toolkit :

- [1a] Guide roller device
- [1b] Awl
- [1c] Guiding roller
- [1d] Square section cutting wire
- [1e] handle

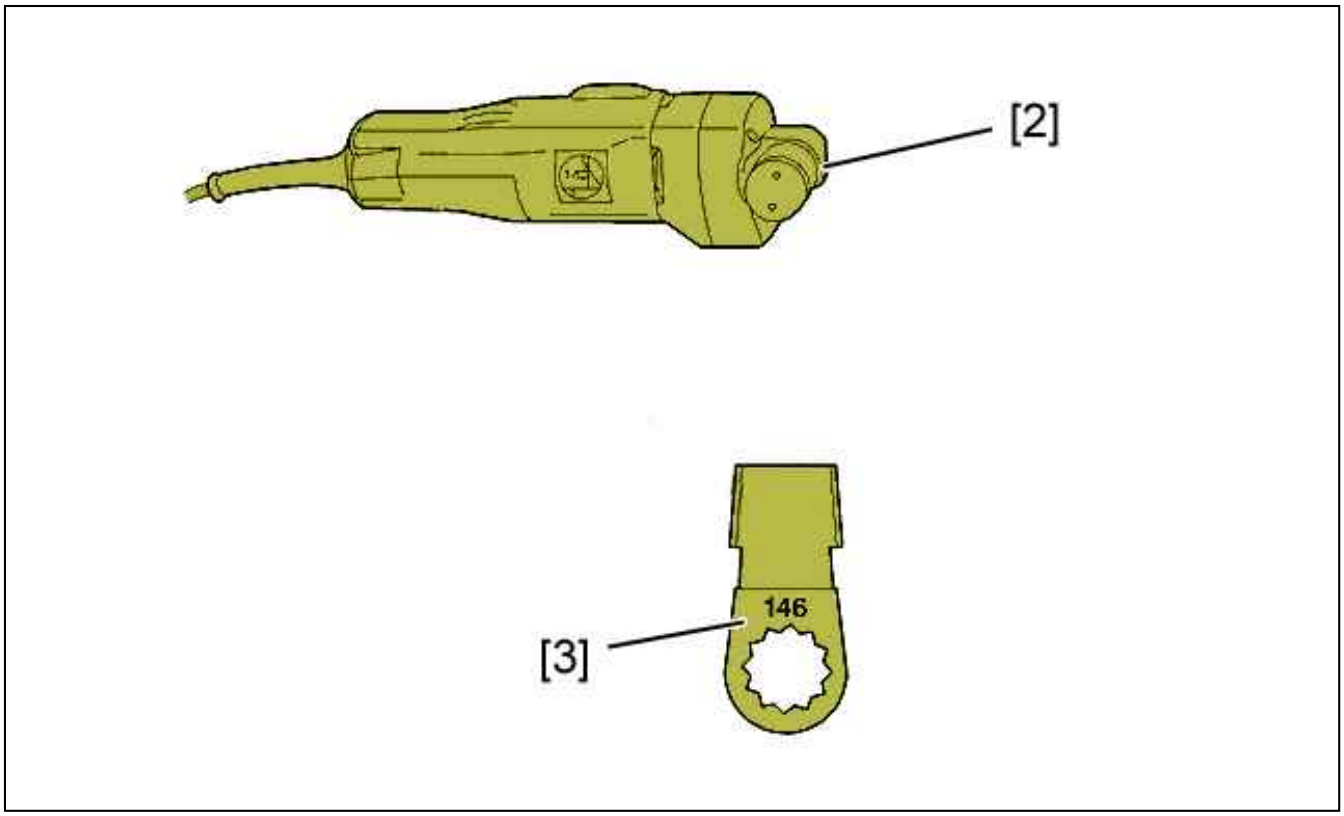

Figure : E5AP2ZRD

[2] electric knife.
[3] shovel blade N° 146.

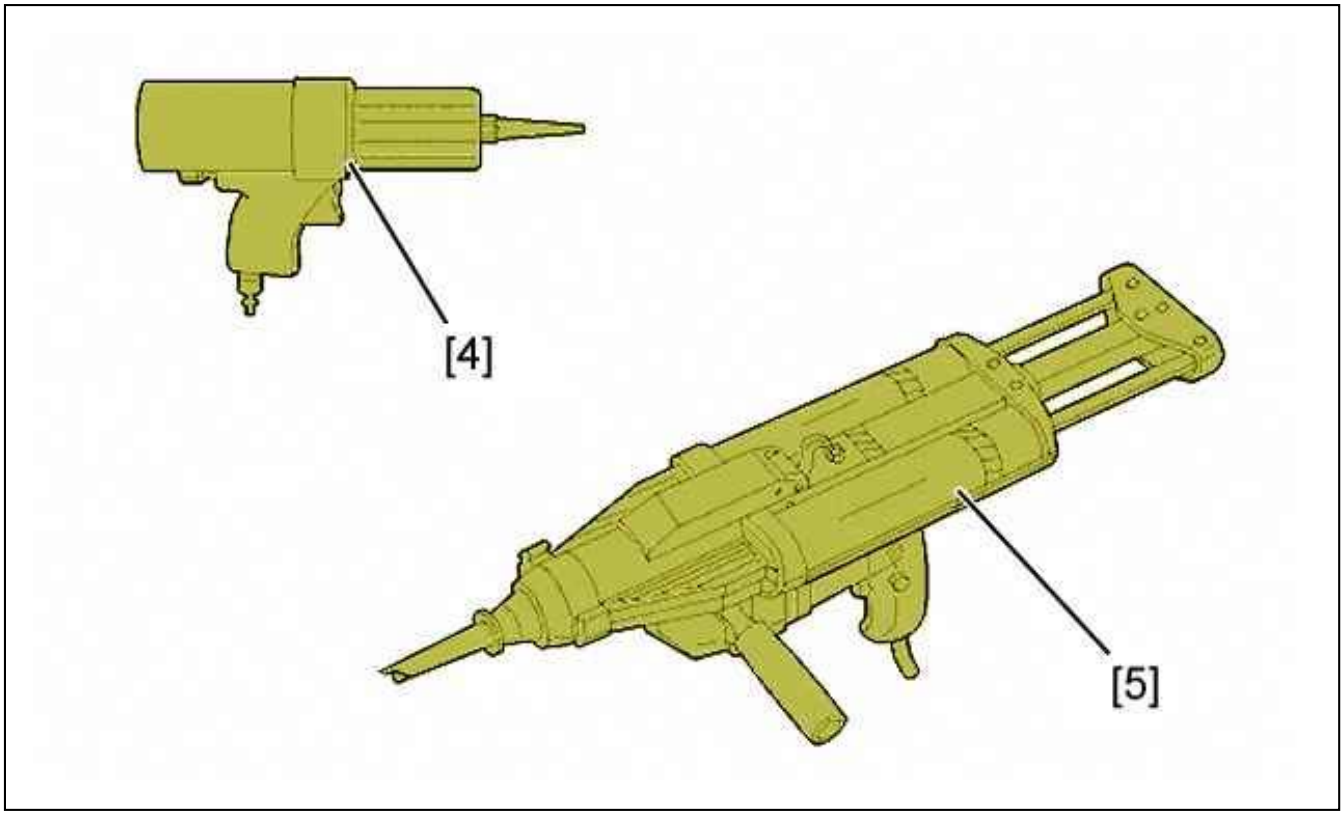

Figure : E5AP30AD

[4] Pneumatic gun (For one part cartridge).

[5] Electric gun (For two-part cartridge).

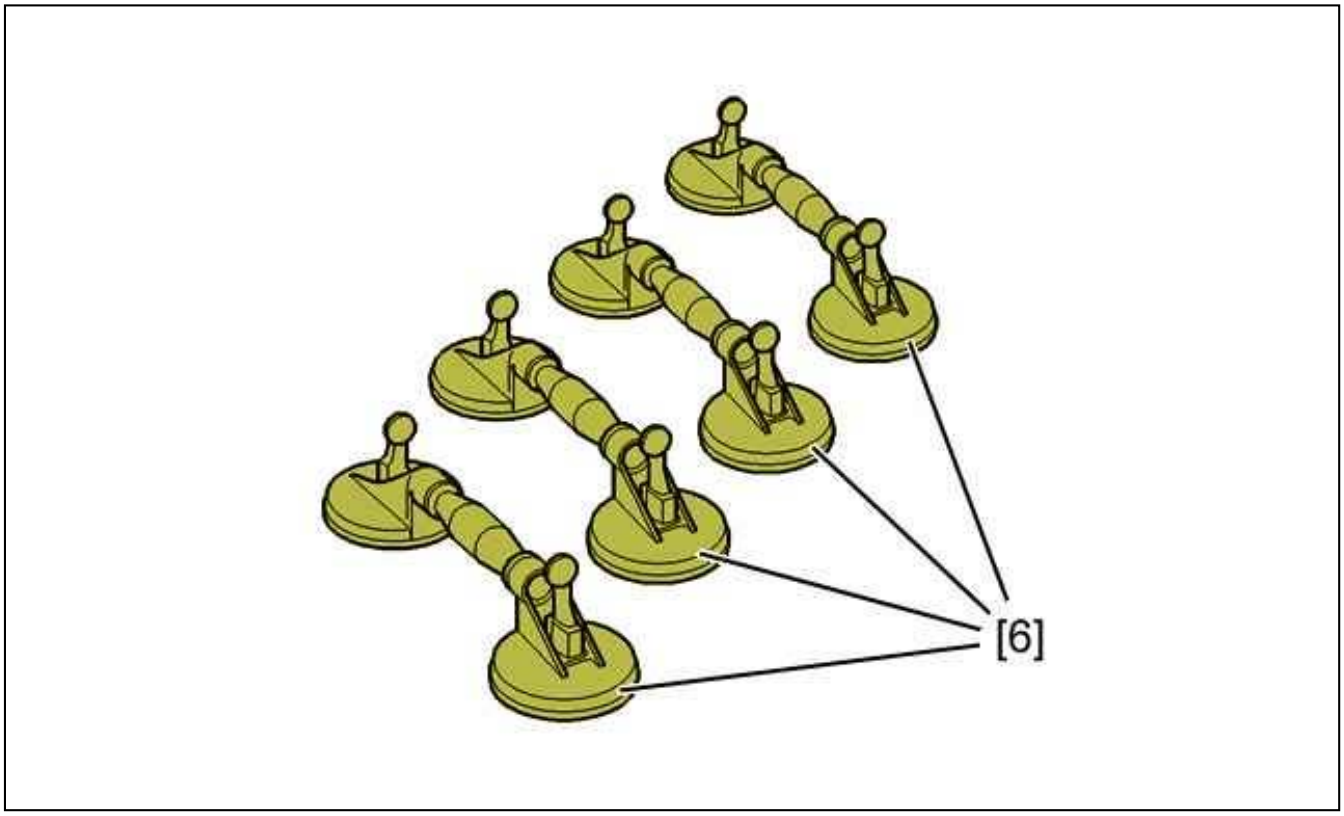

Figure : E5AP2ZTD

[6] Articulated suction pads (Part number 9776.Y0).

2. Removing

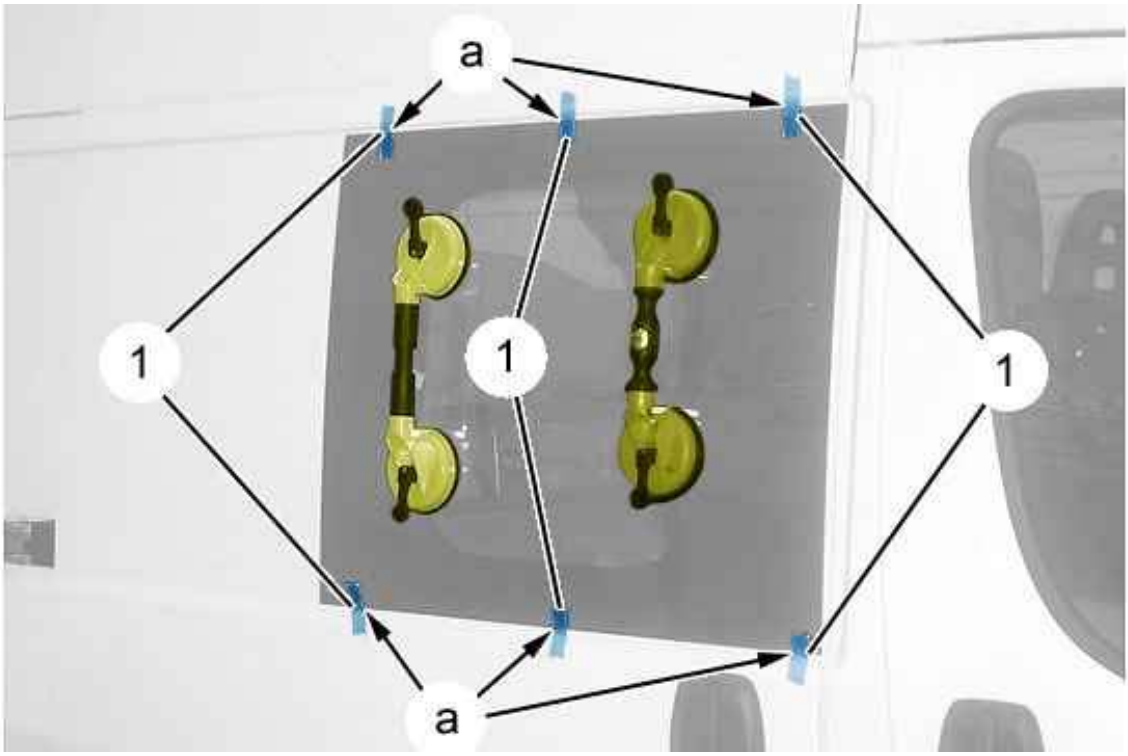

Figure : C4CM2FDD

N.B. : If the window is to be reused, align it and affix adhesive tape (1) (as "a").

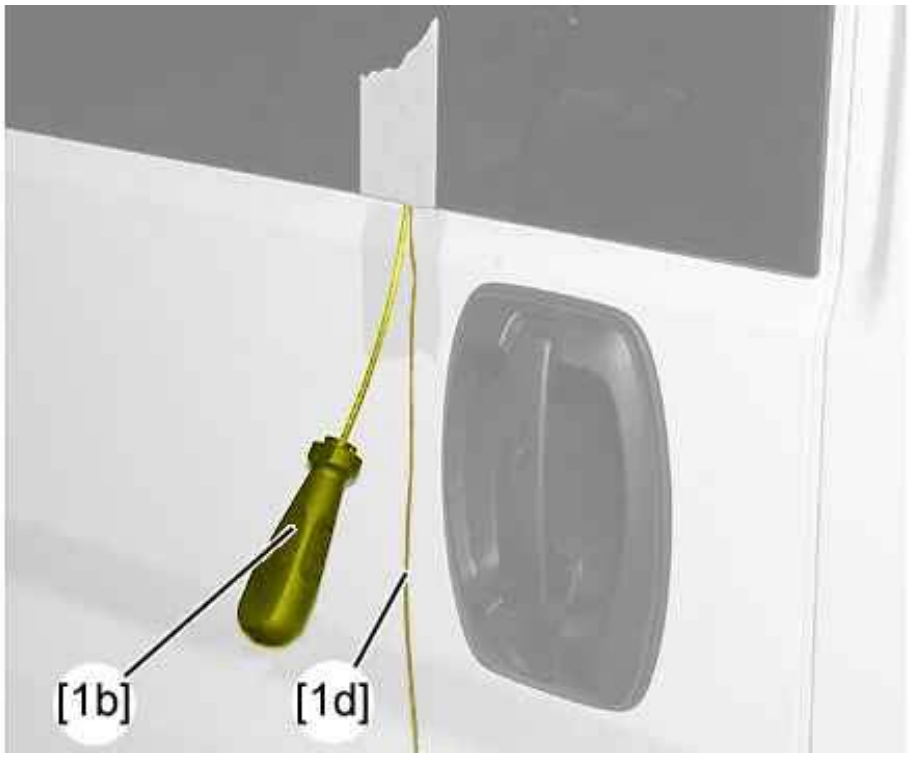

Figure : C5CM028D

Pass the awl [1b] through the bead of sealing adhesive, from the inside towards the outside.

Attach the cutting wire [1d] to the awl [1b].
Pass the cutting wire [1d] inside the vehicle.
Leave a sufficient length to permit fixing of the handles [1e].
Install the handles [1e] at each end of the cutting wire [1d].

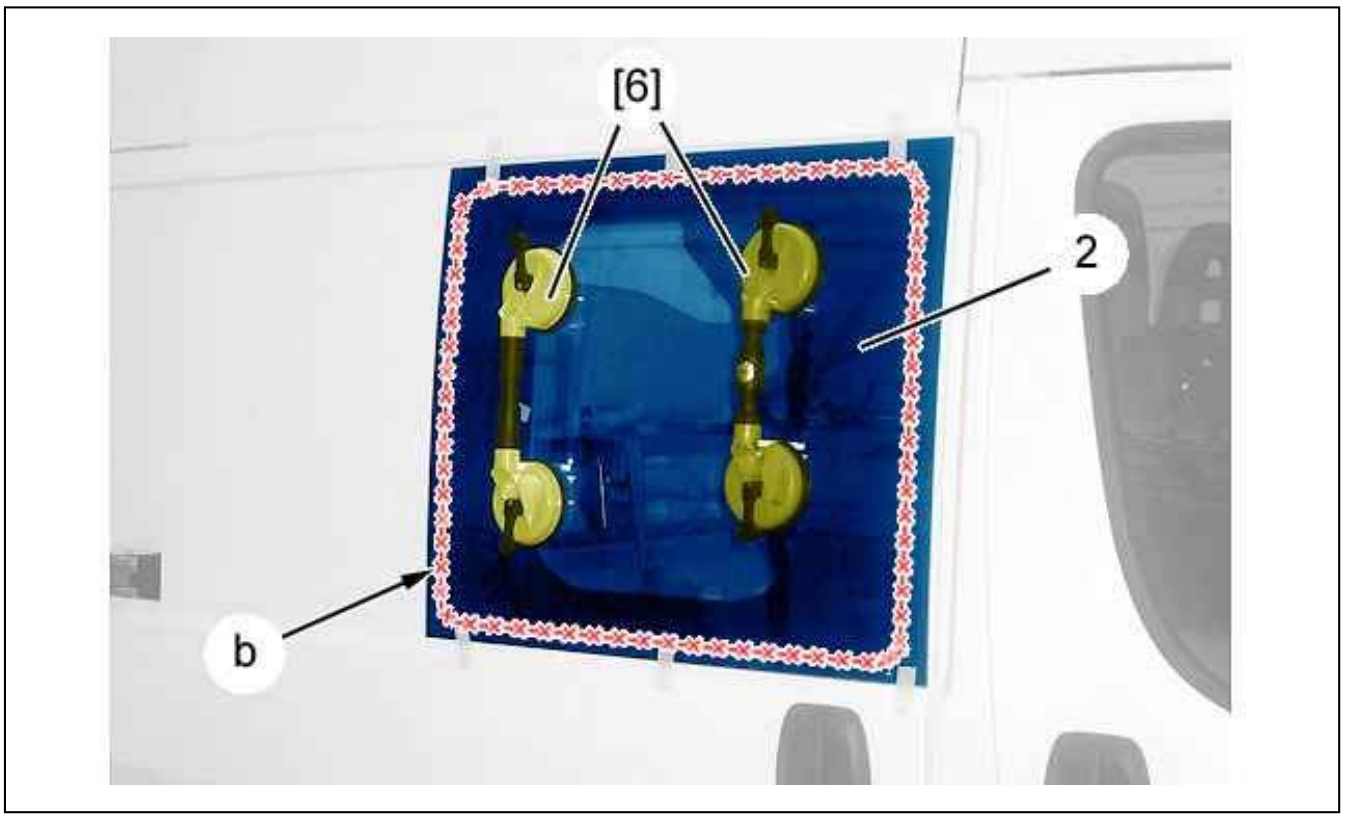

Figure : C4CM2FED

Position : The double articulated suction pads [6].
Two people are required to perform the following operation.
Cut the sealing adhesive (as "b").

N.B. : At the slightest resistance of the wire while cutting, slacken it and assist it in passing the obstacle (Suppor shims, excessive thickness of the bead of adhesive or join between panels).

Remove : The sliding side door window (2) ; Using the double hinged suction cups [6].

3. Cleaning

3.1. Preparation : Side sliding door window

Reusing the sliding side door window :

- Fit the electric knife [2] with the blade [3]
- Remove the adhesive sealing bead
- Remove any dust using a clean cloth
- Only apply the primer to the zones laid bare

Fitting a new sliding side door fixed window :

- Degrease the edge of the glass with the degreaser
- Apply the glass primer provided in the bonding kit (Reference "A3")

N.B. : Only apply the primer to the zones laid bare.

3.2. Preparation of the aperture

On the remains of the bead of sealing adhesive :

- Fit the electric knife [2] with the blade [3]
- Remove the adhesive sealing bead
- Remove any dust using a clean cloth

On the new component :

- Degrease the aperture
- Apply the metal primer provided in the bonding kit (Reference "A3")
- Allow to dry for 10 mn

4. Refitting

4.1. Reusing the sliding side door window

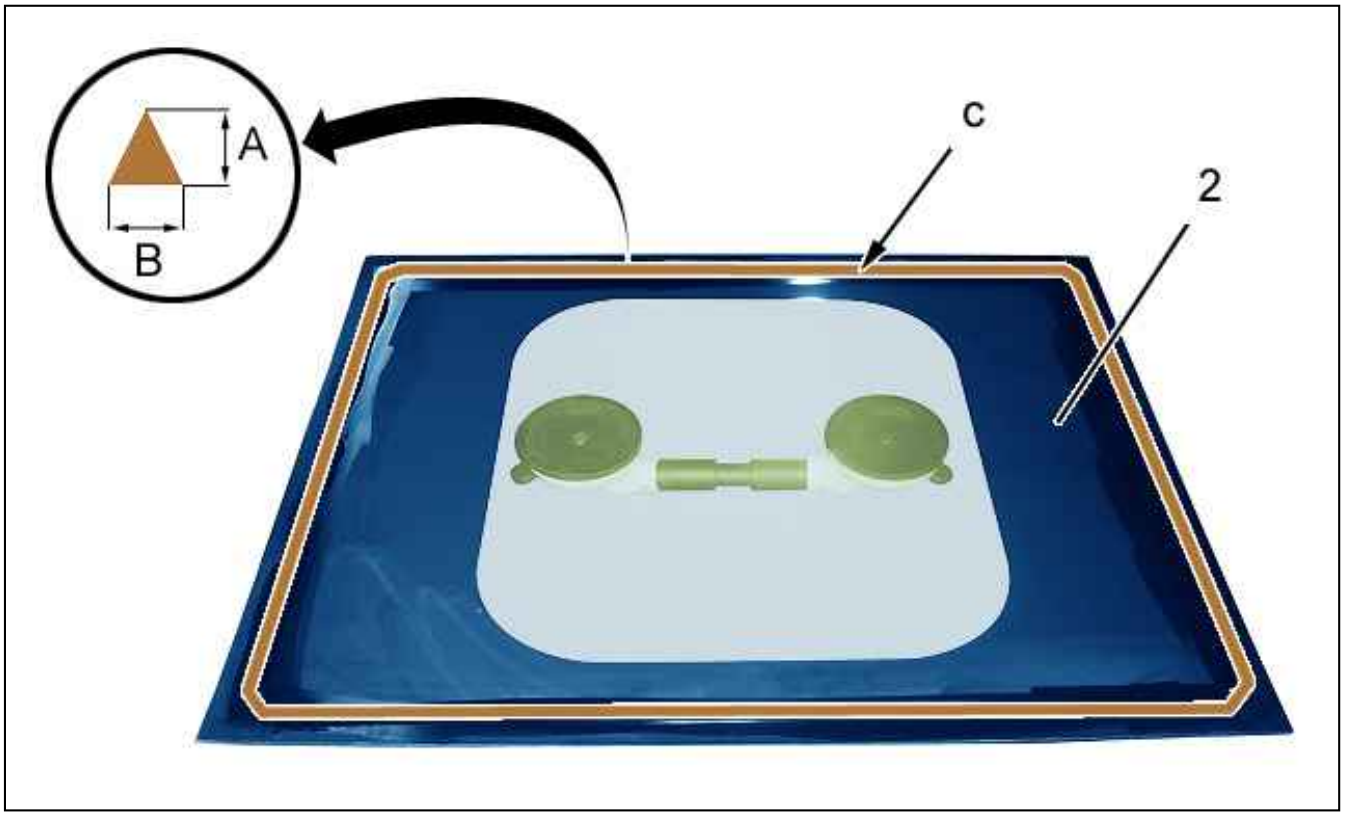

Figure : C5CM065D

"A" = 12 mm .
"B" = 8 mm .
Cut the nozzle in triangular section to obtain a bead of sealing adhesive "B" wide and "A" deep.

ESSENTIAL : Always replace : The faulty seals.

Apply a bead of sealing adhesive to the periphery of the sliding side door window (2) (as "c") ; Using the tools [4] or [5].

ESSENTIAL : If a two-pack product is used : The time between starting to extrude the sealing adhesive and fitting the window on the vehicle must not exceed 5 minutes.

Refit : The sliding side door window :

- Using the double hinged suction cups [6]
- Using adhesive tapes (2)

Press gently on the periphery of the sliding side door (3) fixed window .
Clean the sliding side door fixed window and its periphery .

4.2. Fitting a new sliding side door fixed window

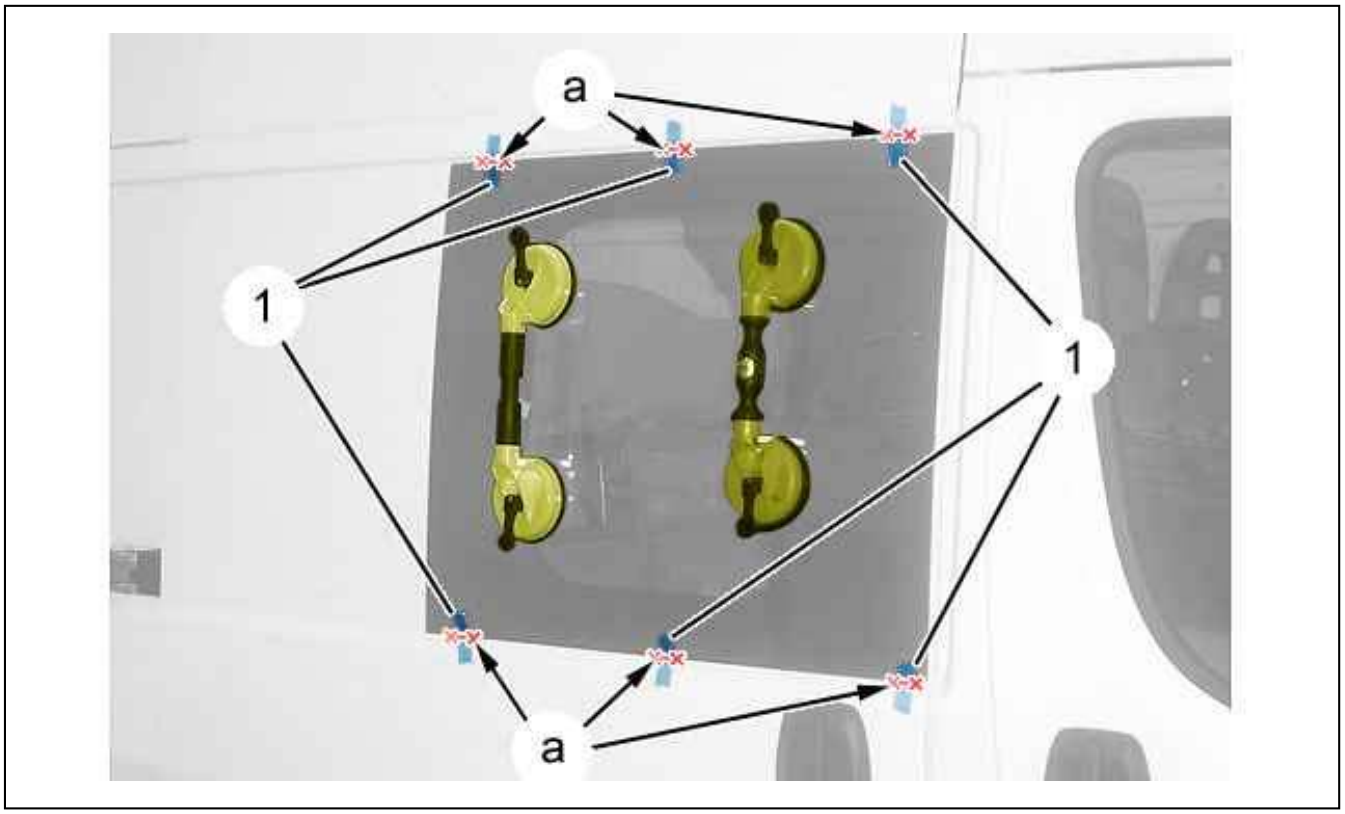

Figure : C4CM2FFD

Test fit the sliding side door (2) window.
Position the adhesive strips (1).
Cut the tape (as "a").
Remove : The sliding side door window (2).
Apply a bead of sealing adhesive to the periphery of the sliding side door (2) window (as "c") ; Using the tools [4] or [5].

ESSENTIAL : If a two-pack product is used : The time between starting to extrude the sealing adhesive and fitting the window on the vehicle must not exceed 5 minutes.

Refit : The sliding side door window :

- Using the double hinged suction cups [6]
- Using adhesive tapes (2)

Press gently on the periphery of the sliding side door (3) fixed window .
Clean the sliding side door fixed window and its periphery .

ESSENTIAL : Observe the vehicle immobilisation time following fitting of the windscreen recommended by the suppliers of the products used.

Refit : The wind-down (Proceed in the reverse order to removal).
Continue the fitting operations in the reverse order to removal.

Check the sealing of the sliding side door fixed window (2).
Clean the sliding side door fixed window and its periphery .

REMOVING - REFITTING : EXTERIOR MIRROR

ESSENTIAL : Observe the safety and cleanliness recommendations .

1. Tooling

Tool	Reference	Designation
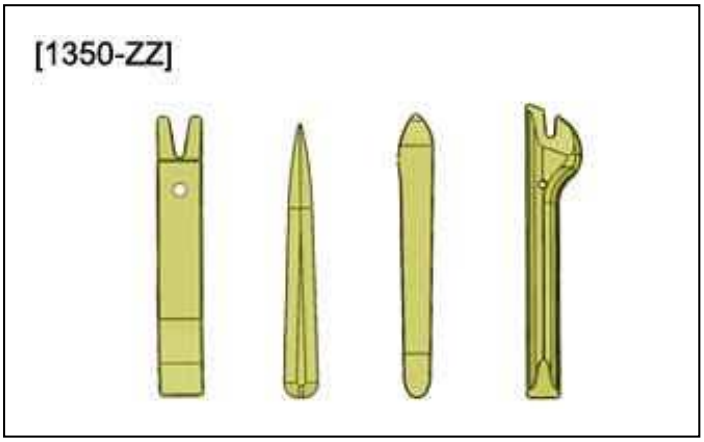 Figure : E5AG02MT	[1350-ZZ]	Stripping tools

2. Removing

CAUTION : The electric mirrors must not be operated manually (unfolding or folding) at the risk of breaking the mechanism.

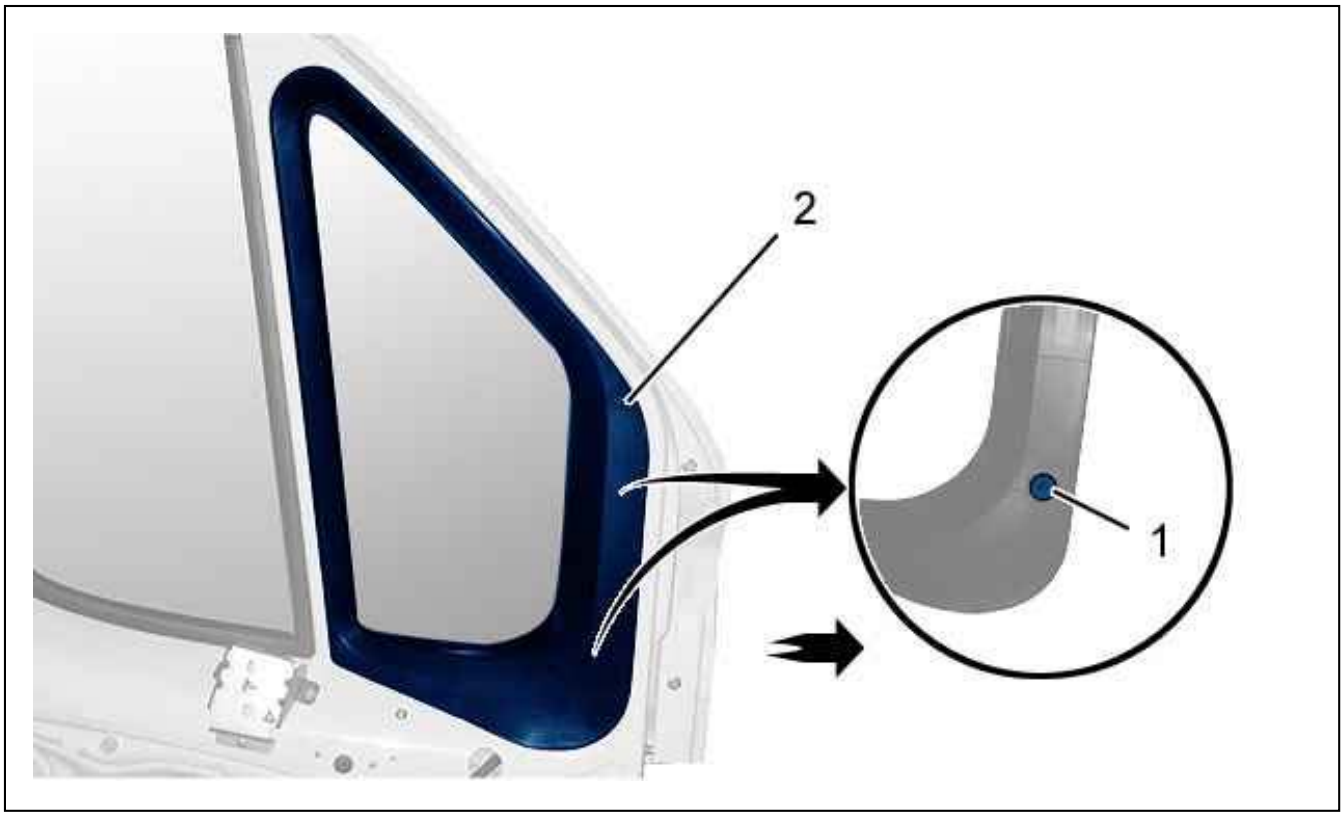

Figure : C4CP1LXD

Unclip the clips (1) ; Using tool [1350-ZZ].
Unclip and remove the embellisher (2).

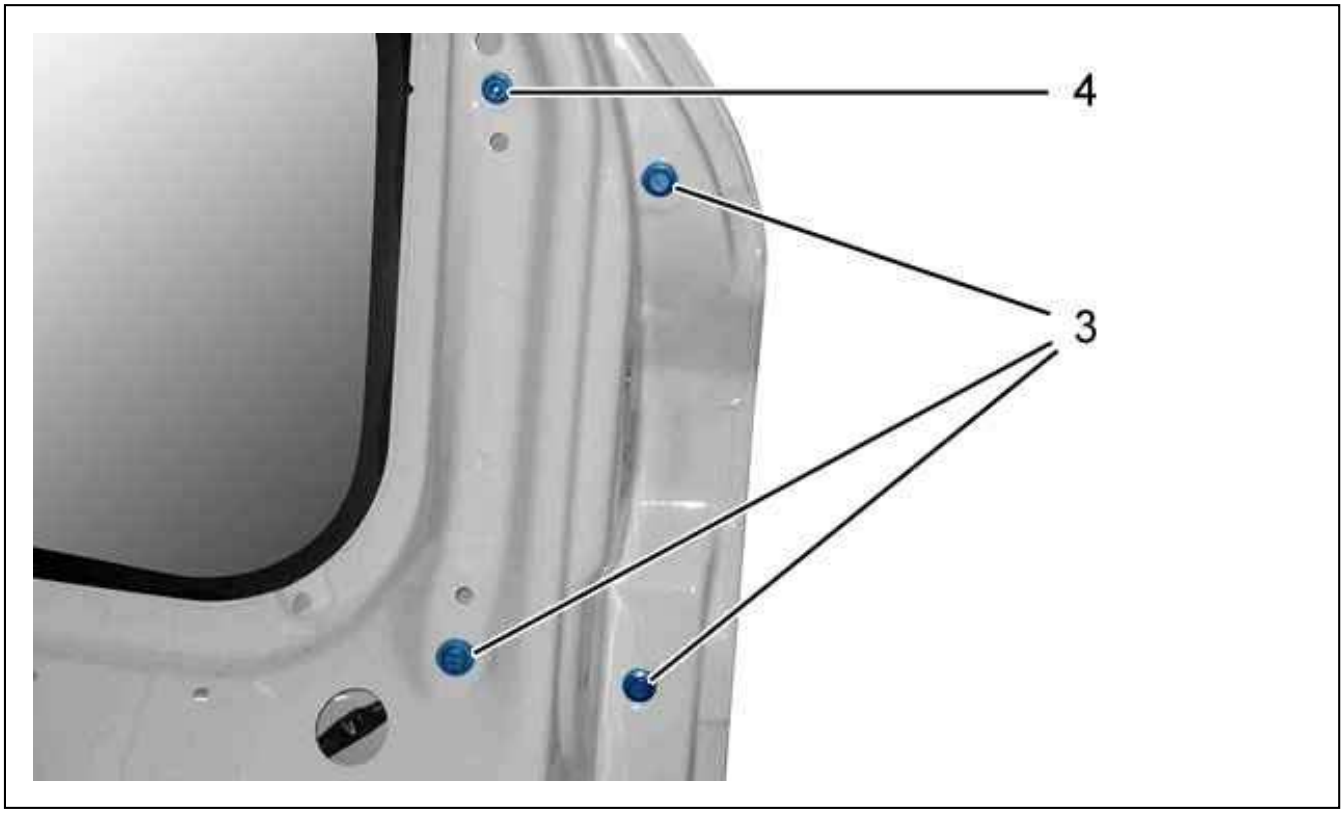

Figure : C4CP1LYD

Remove :

- The bolts (3)
- The nut (4)

Disconnect the connector of the electrical harness of the exterior rear view mirror.
Remove the exterior rear view mirror .

3. Refitting

Proceed in the reverse order to removal.
Check the operation.

REPLACEMENT : SLIDING SIDE DOOR UPPER RAIL ASSEMBLY

ESSENTIAL : All of the stripped surfaces must be protected by means of the approved electrolytic rezincing process . (see the relevant operation).

ESSENTIAL : Observe the elementary rules of hygiene and safety (wear a face mask to protect against fumes and vapour - work in a well ventilated space).

1. Additional operations

Disconnect the battery.
Replace the intermediate upper right-hand closing panel (see the relevant operation).
Remove - Refit the sliding side door .
Release the wiring harnesses.

2. Identification of the replacement parts

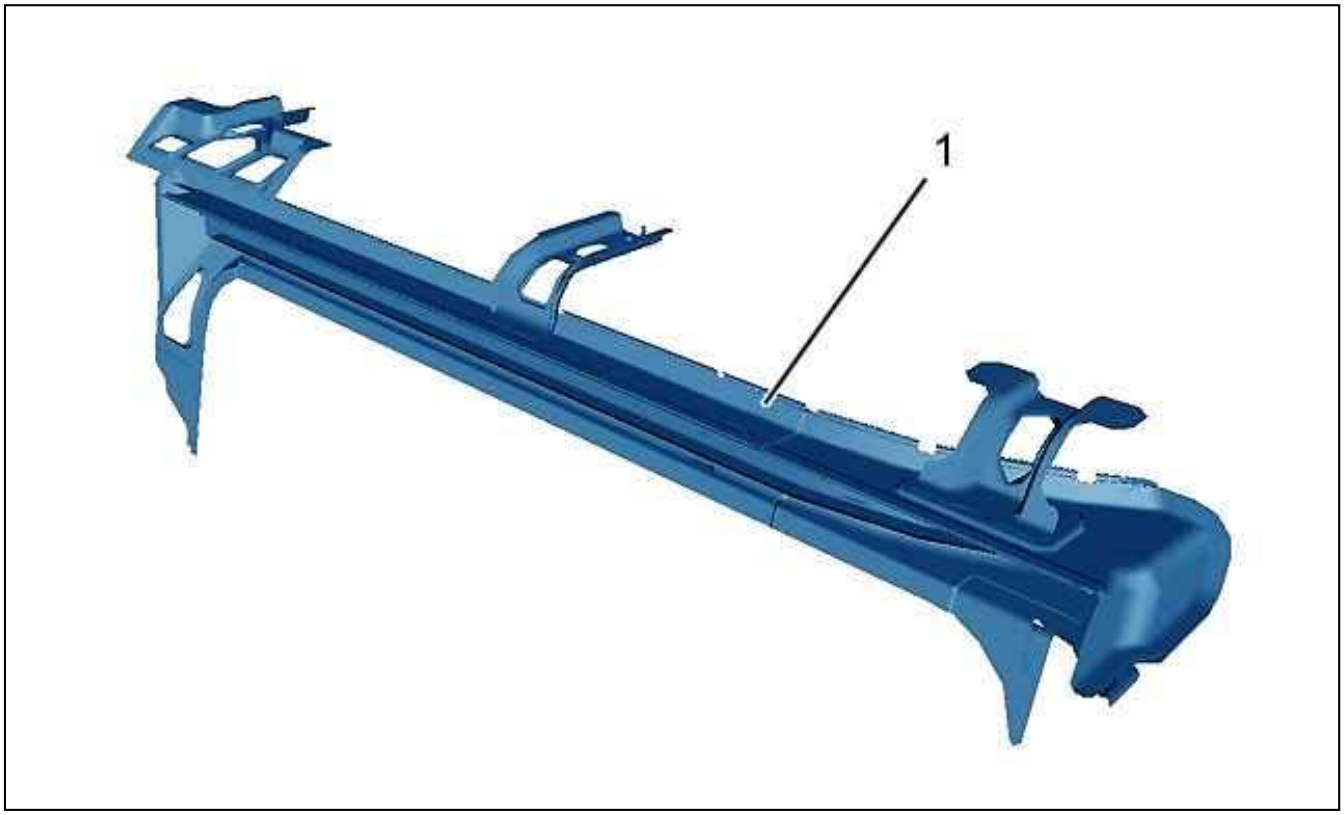

Figure : C4CP1ZXD

Figure 1.
(1) Sliding side door upper rail assembly .

3. Composition of replacement parts

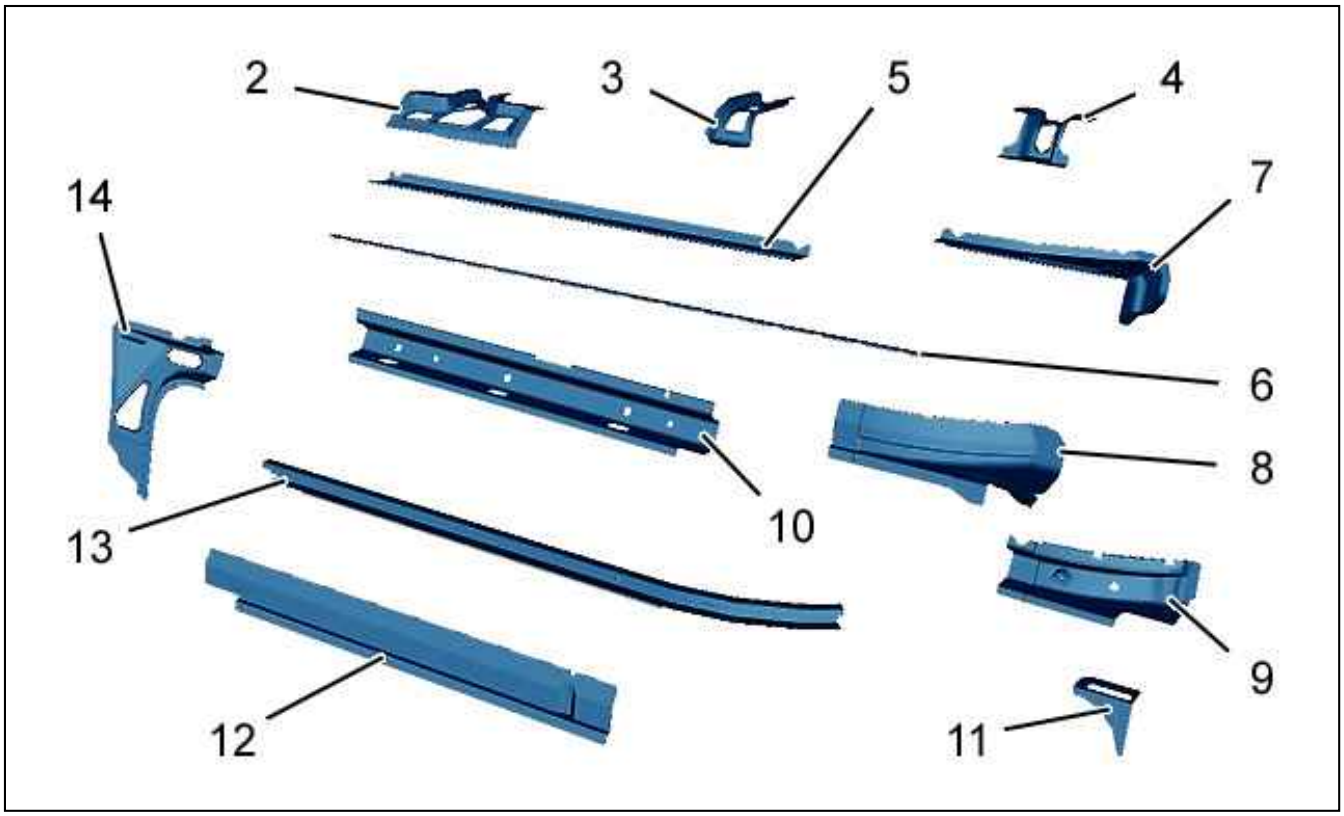

Figure : C4CP1ZYD

Figure 2.
(2) Central roof bow right-hand support .
(3) Intermediate bow right-hand support .
(4) Rear roof right-hand support - Intermediate upper RH closing panel .
(5) Upper right-hand longeron .
(6) Front right soundproofing trim .
(7) Front right exterior pillar upper strengthener .
(8) Front right exterior pillar intermediate strengthener .
(9) Front right exterior pillar lower strengthener .
(10) Lower right-hand longeron strengthener .
(11) Front right exterior pillar lower strengthener .
(12) Lower right-hand longeron (body side).
(13) Upper right-hand rail .
(14) Right-hand intermediate exterior pillar upper strengthener .

4. Preparation of the new part

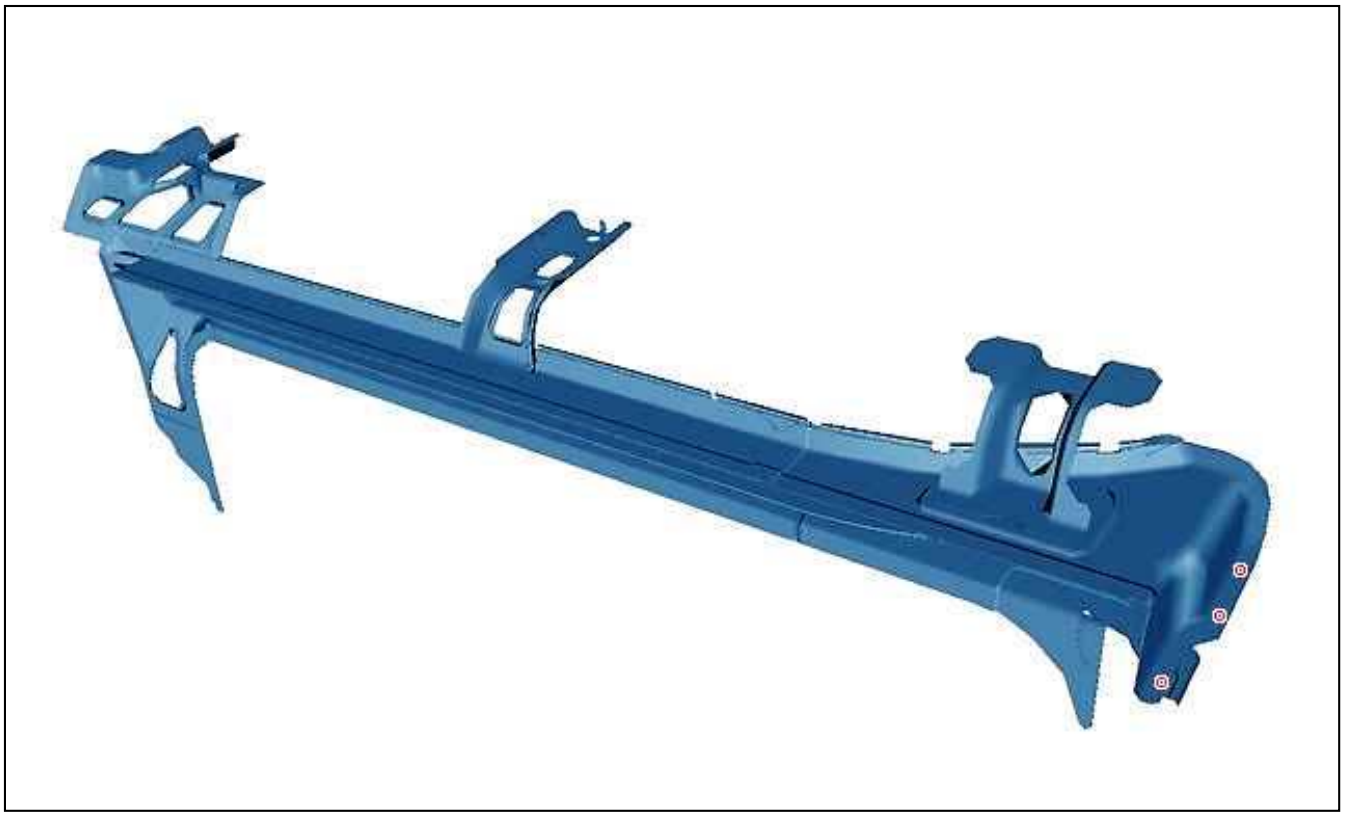

Figure : C4CP1ZZD

Figure 3.
Mark then drill to Ø 6 mm for later plug welding (3 holes).
Prepare the mating edges .

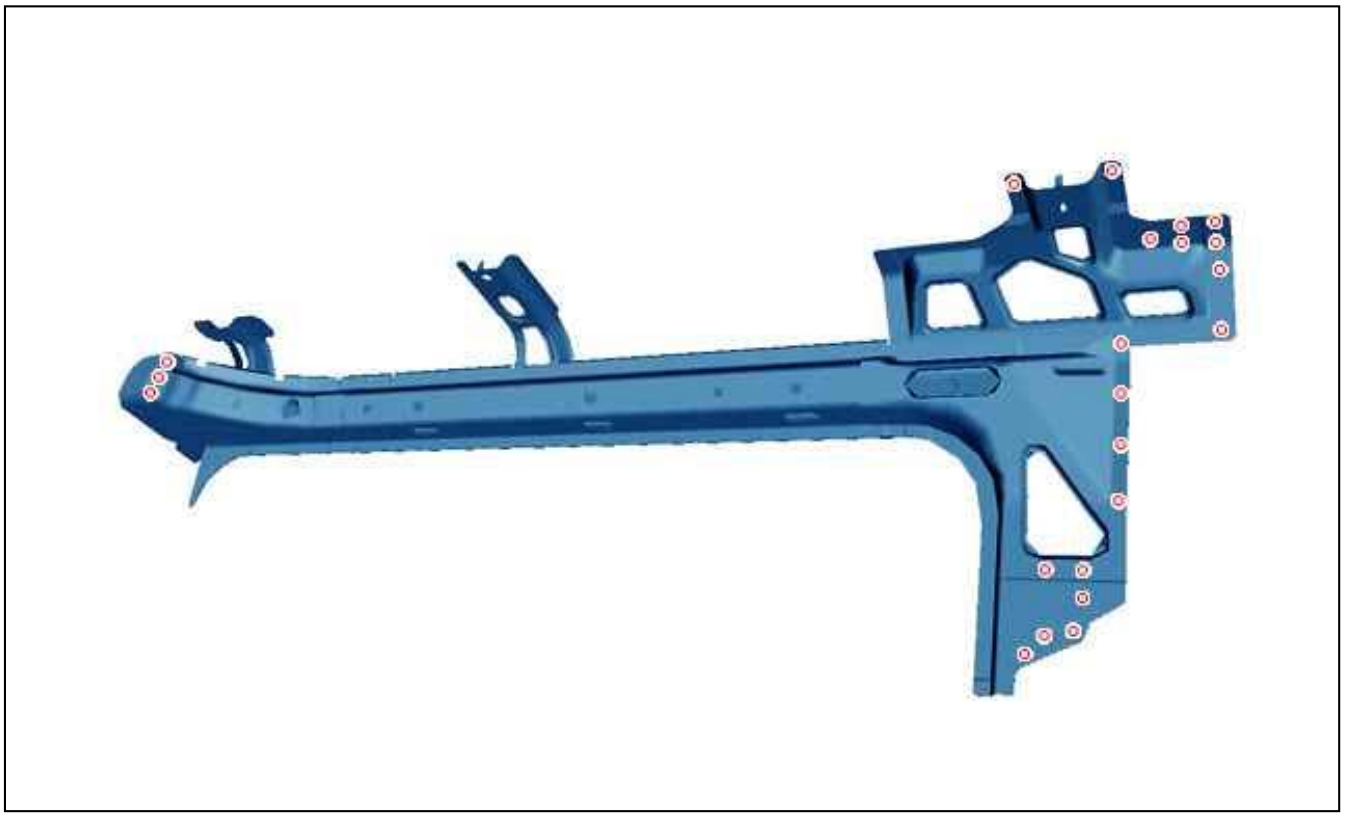

Figure : C4CP200D

Figure 4.
Mark then drill to Ø 6 mm for later plug welding (22 holes).
Prepare the mating edges .

5. Cutting out

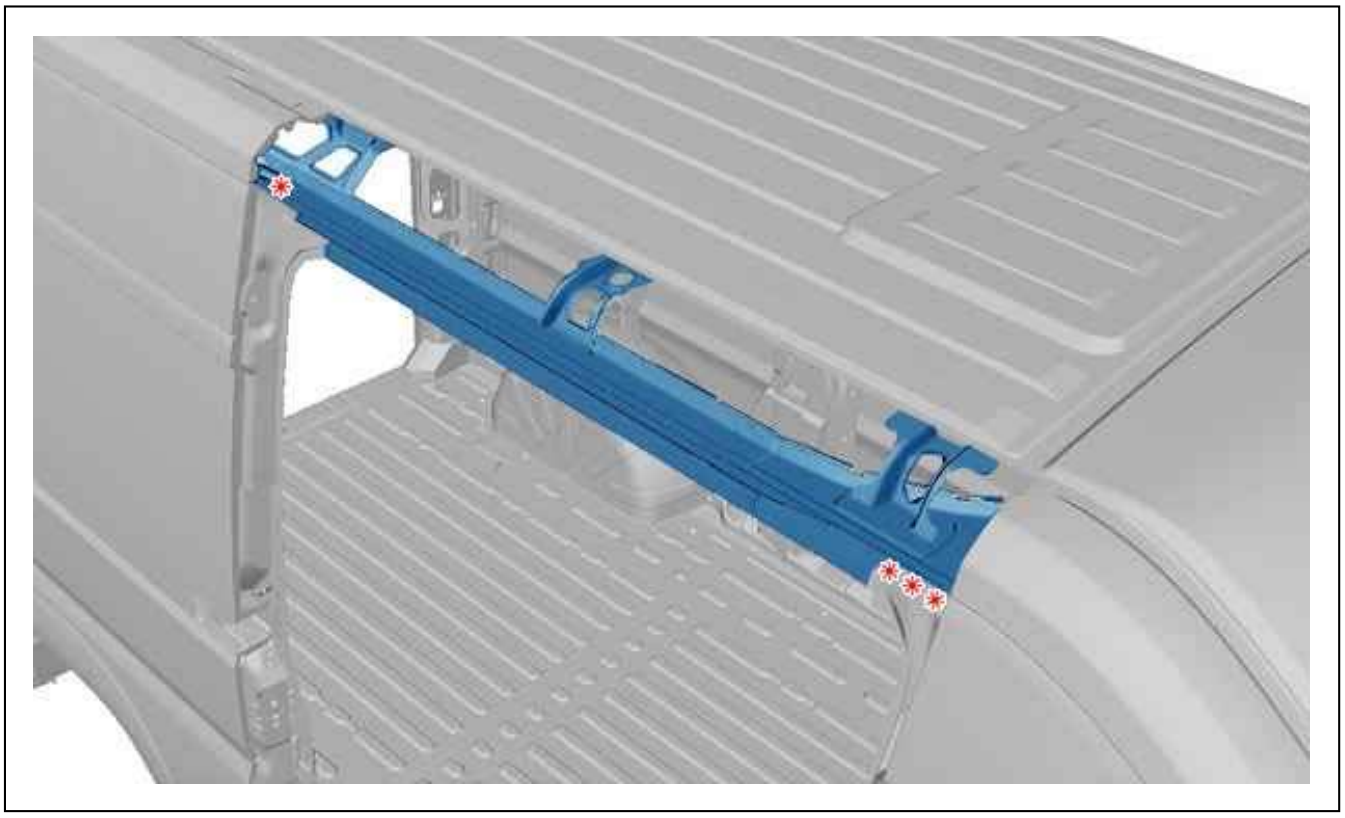

Figure : C4CP201D

Figure 5.
Cut out the spot welds .

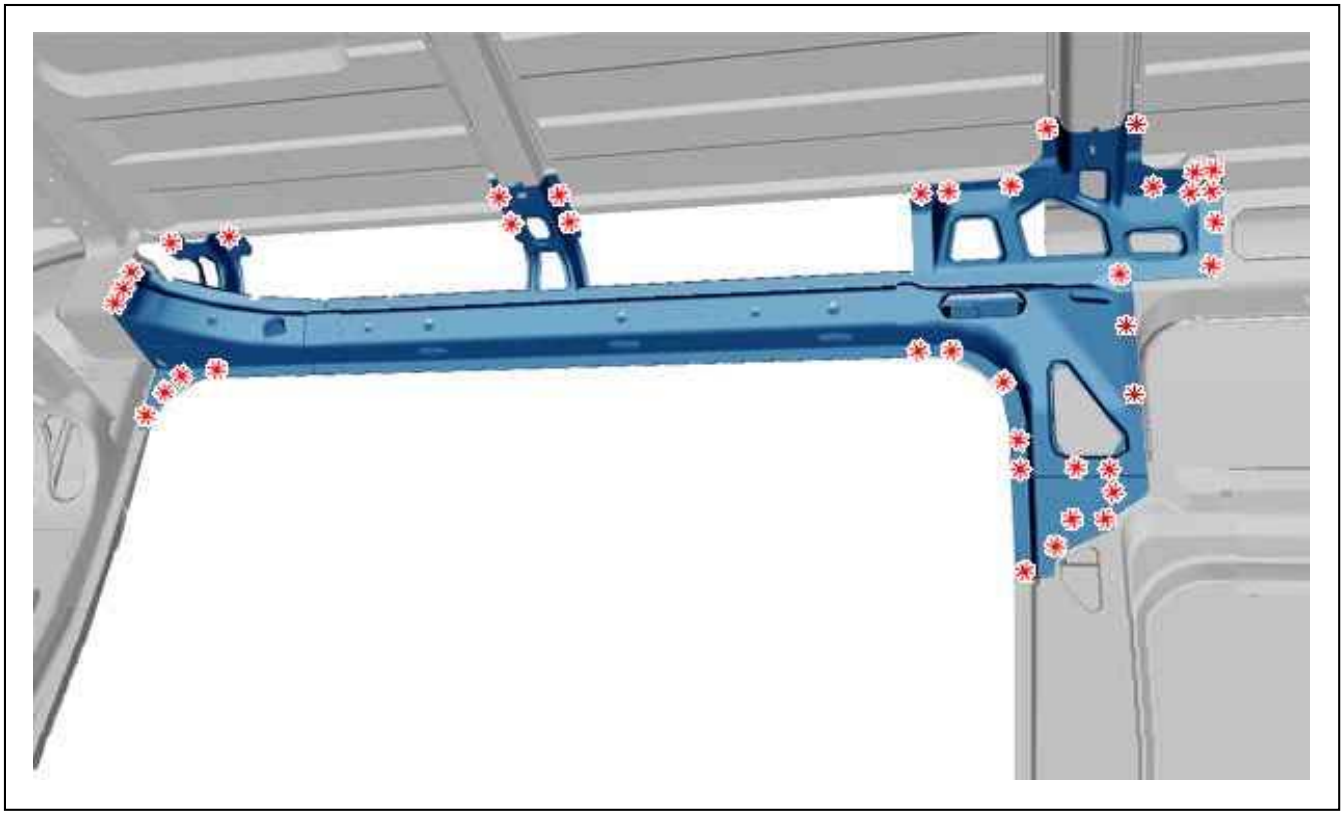

Figure : C4CP202D

Figure 6.
Cut out the spot welds .

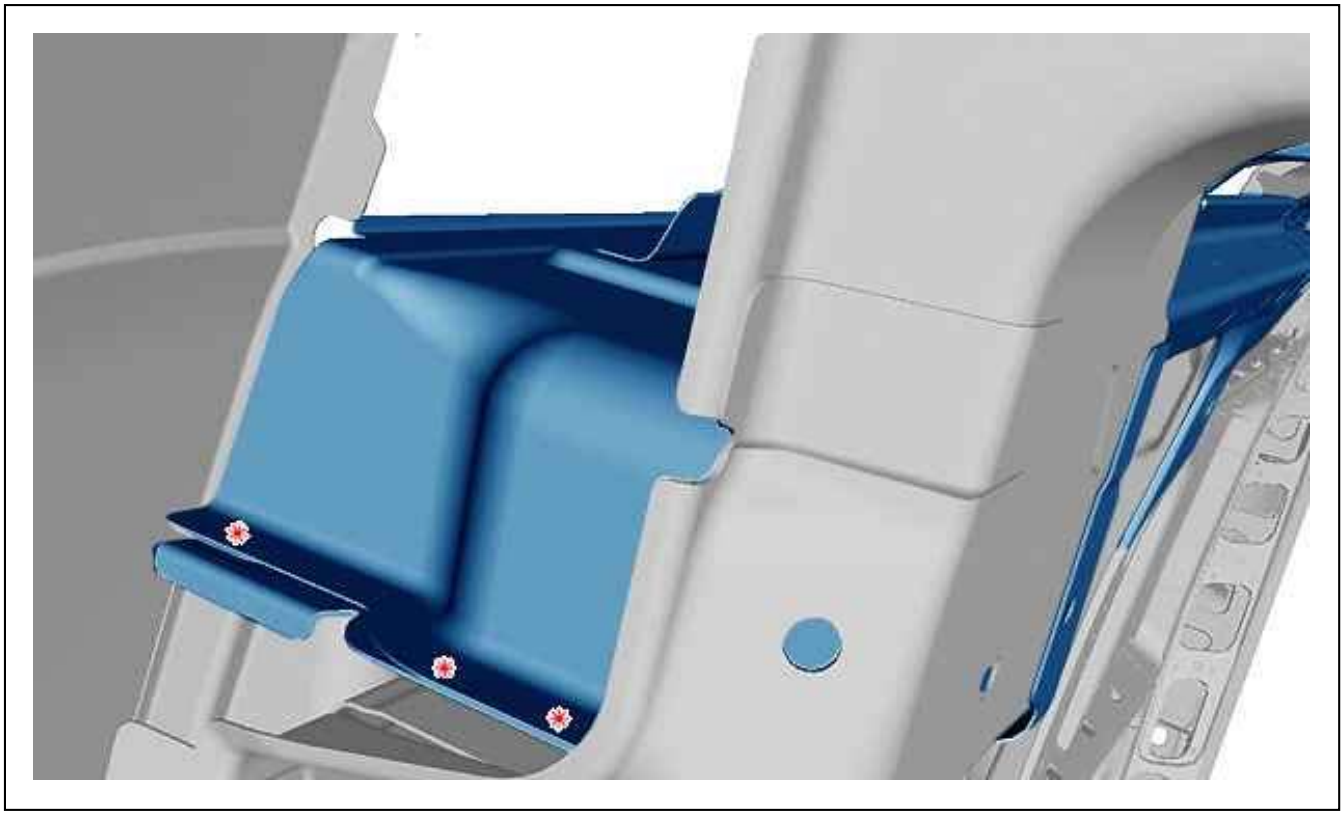

Figure : C4CP203D

Figure 7.

Cut out the spot welds .
Remove the sliding side door upper rail assembly .

6. Bodywork cleaning and preparation

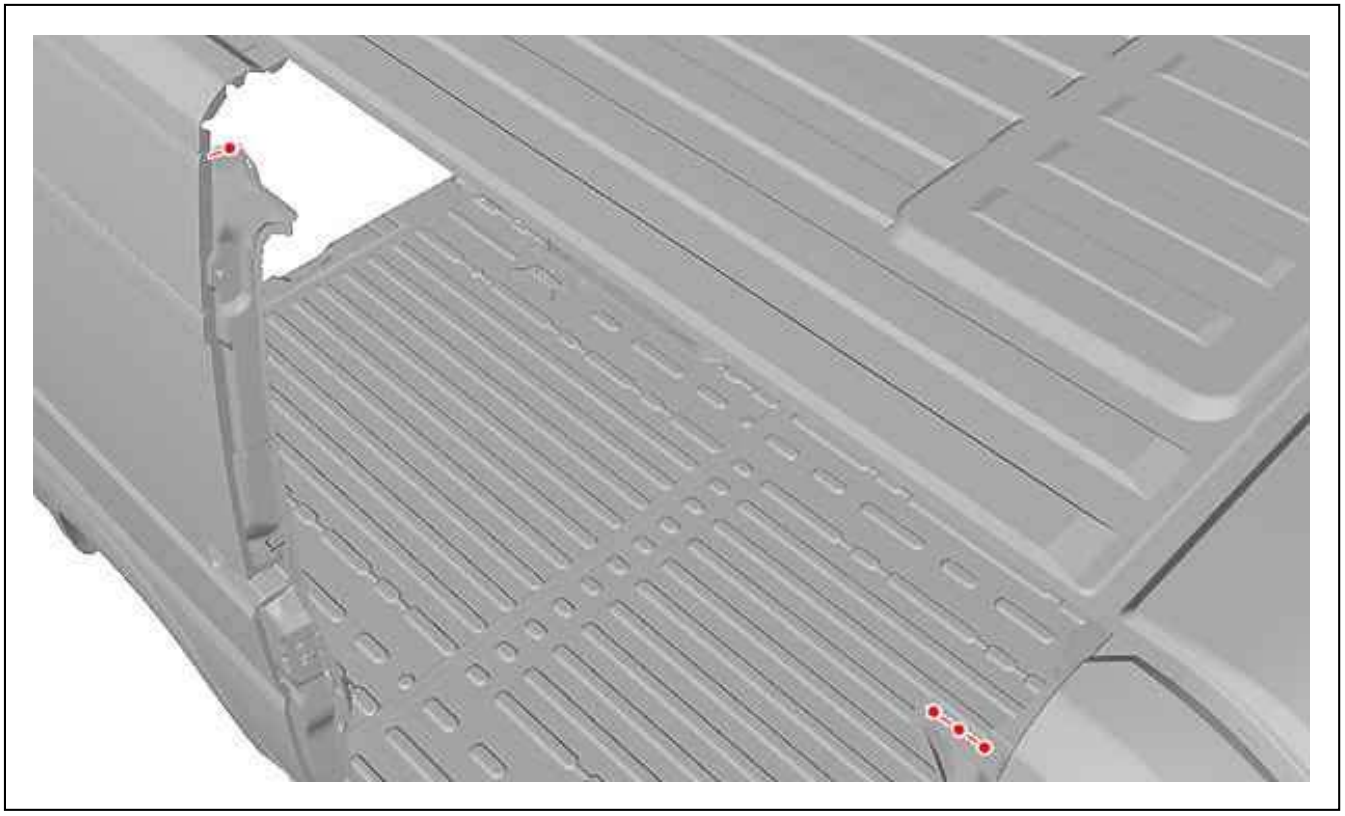

Figure : C4CP204D

Figure 8.
Align then prepare the mating edges.

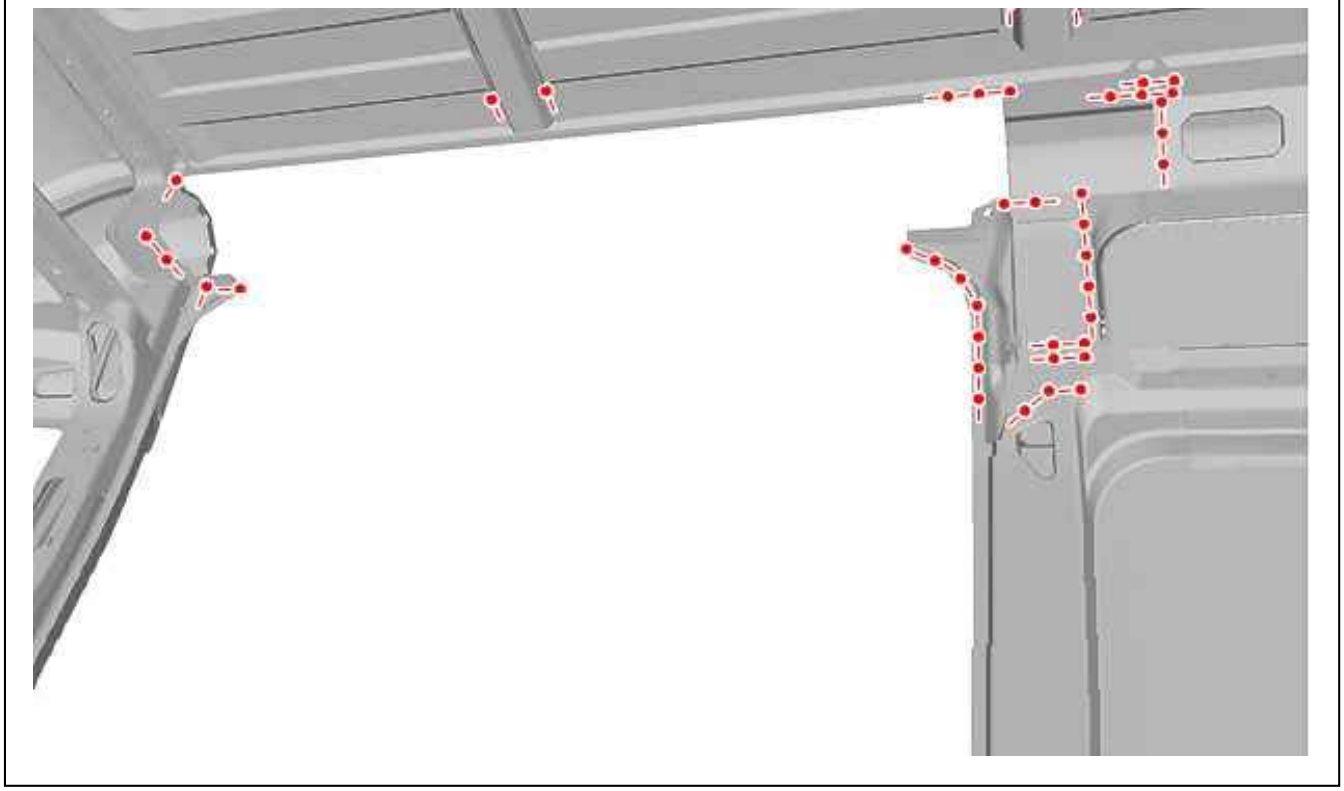

Figure : C4CP205D

Figure 9.
Align then prepare the mating edges.

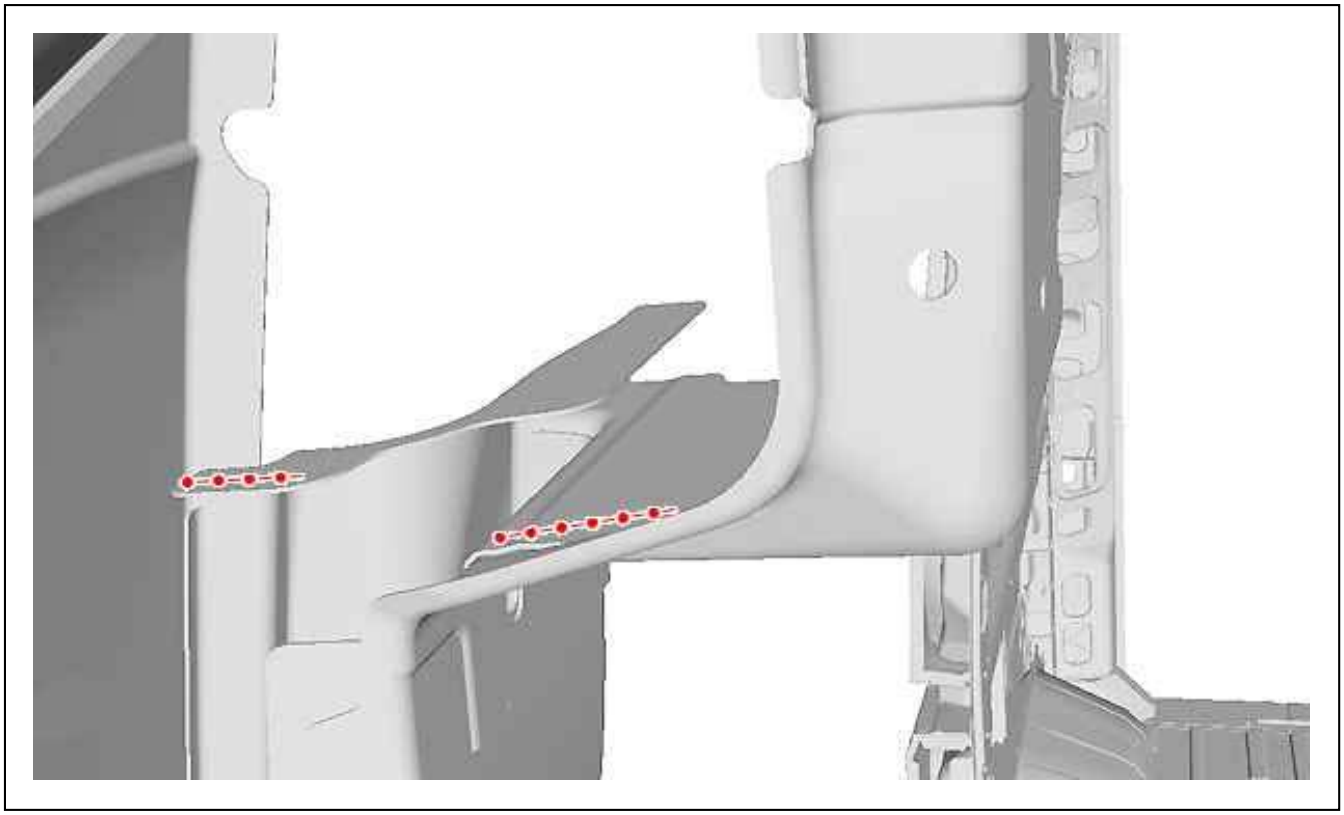

Figure : C4CP206D

Figure 10.

Prepare the mating edges .
Align the mating edges and protect them with a weldable primer.

7. Adjustment

Present the component for adjustment.
Check the fits and clearances (see the relevant operation).

8. Welding

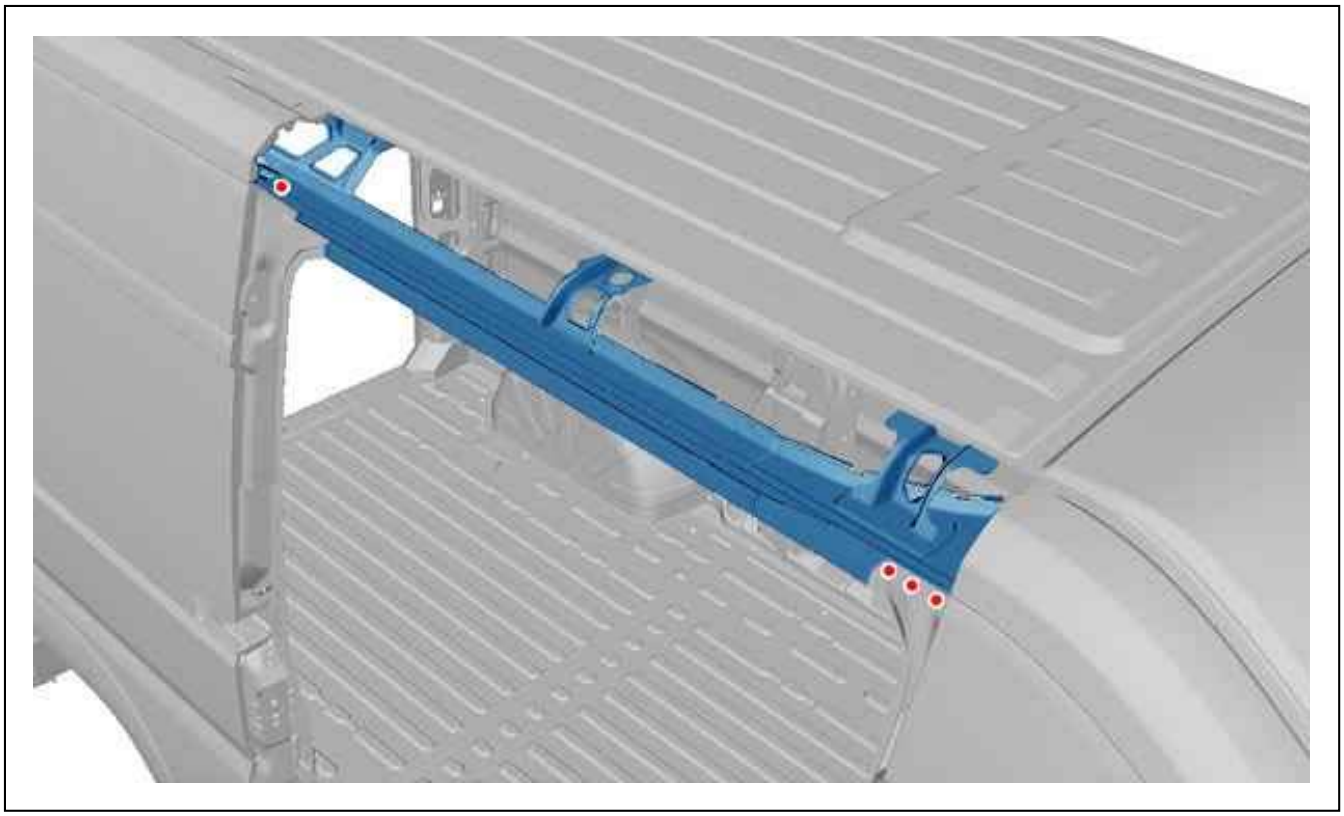

Figure : C4CP207D

Figure 11.
Weld with electric spot welds.

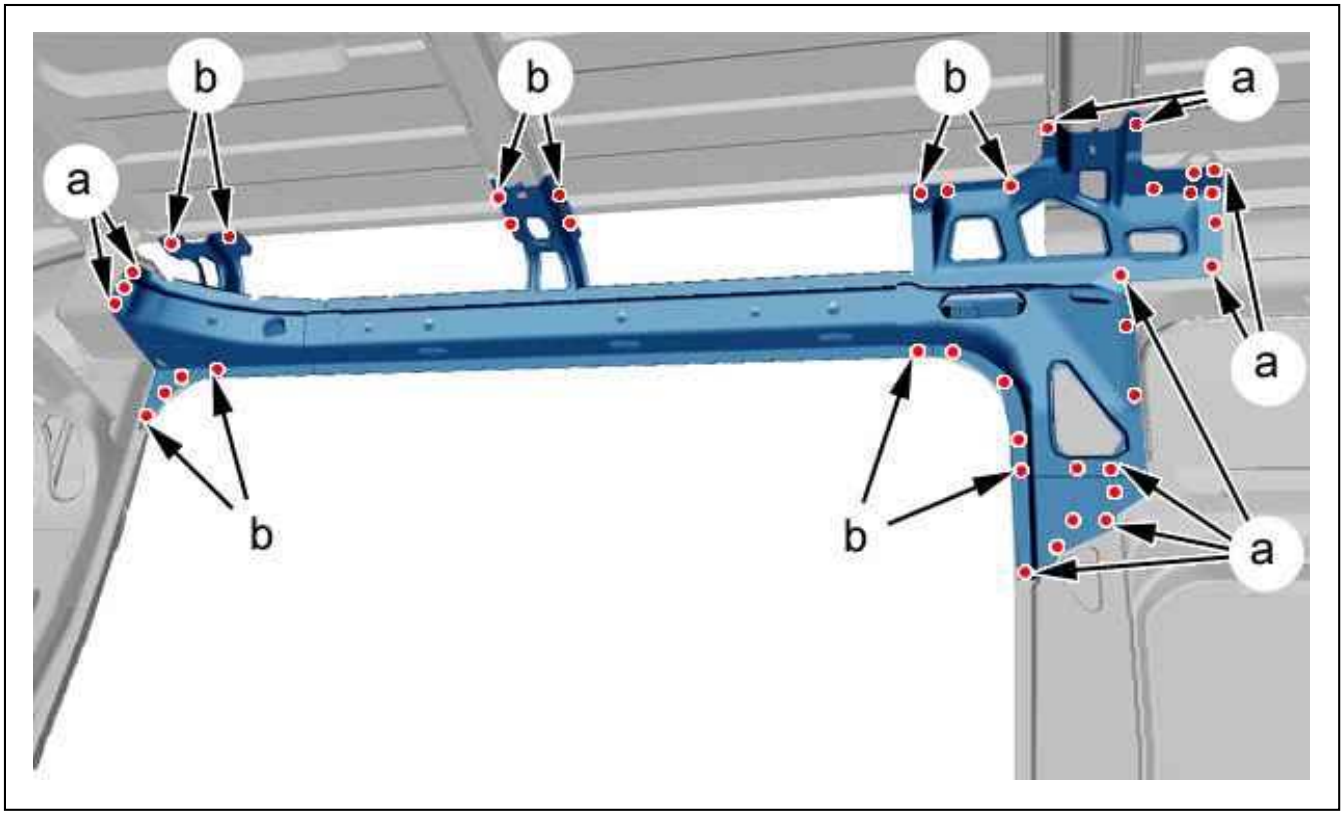

Figure : C4CP208D

Figure 12.
Weld with plug welds (at "a").
Grind the plug welds.
Weld with electric spot welds (at "b").

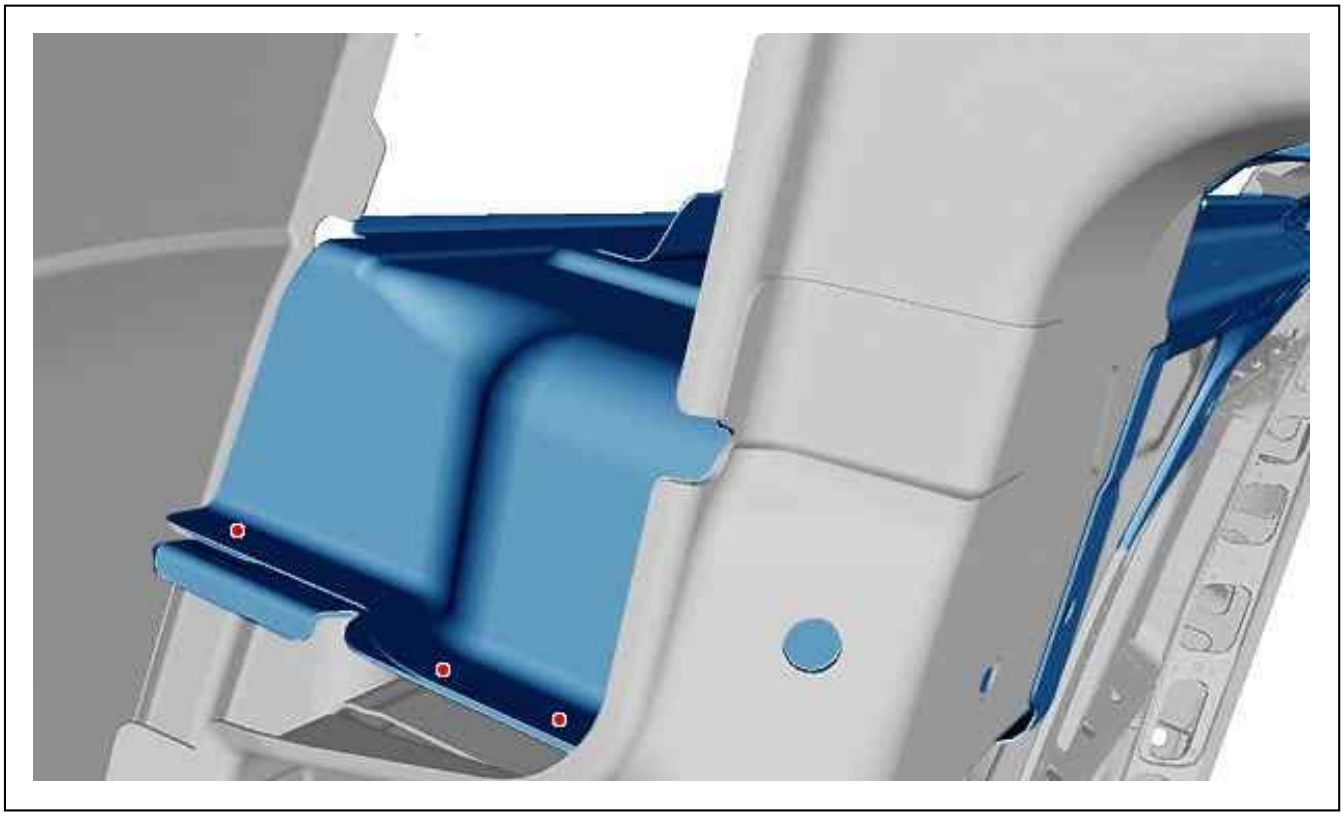

Figure : C4CP209D

Figure 13.
Weld with plug welds.
Grind the plug welds.

9. Sealing

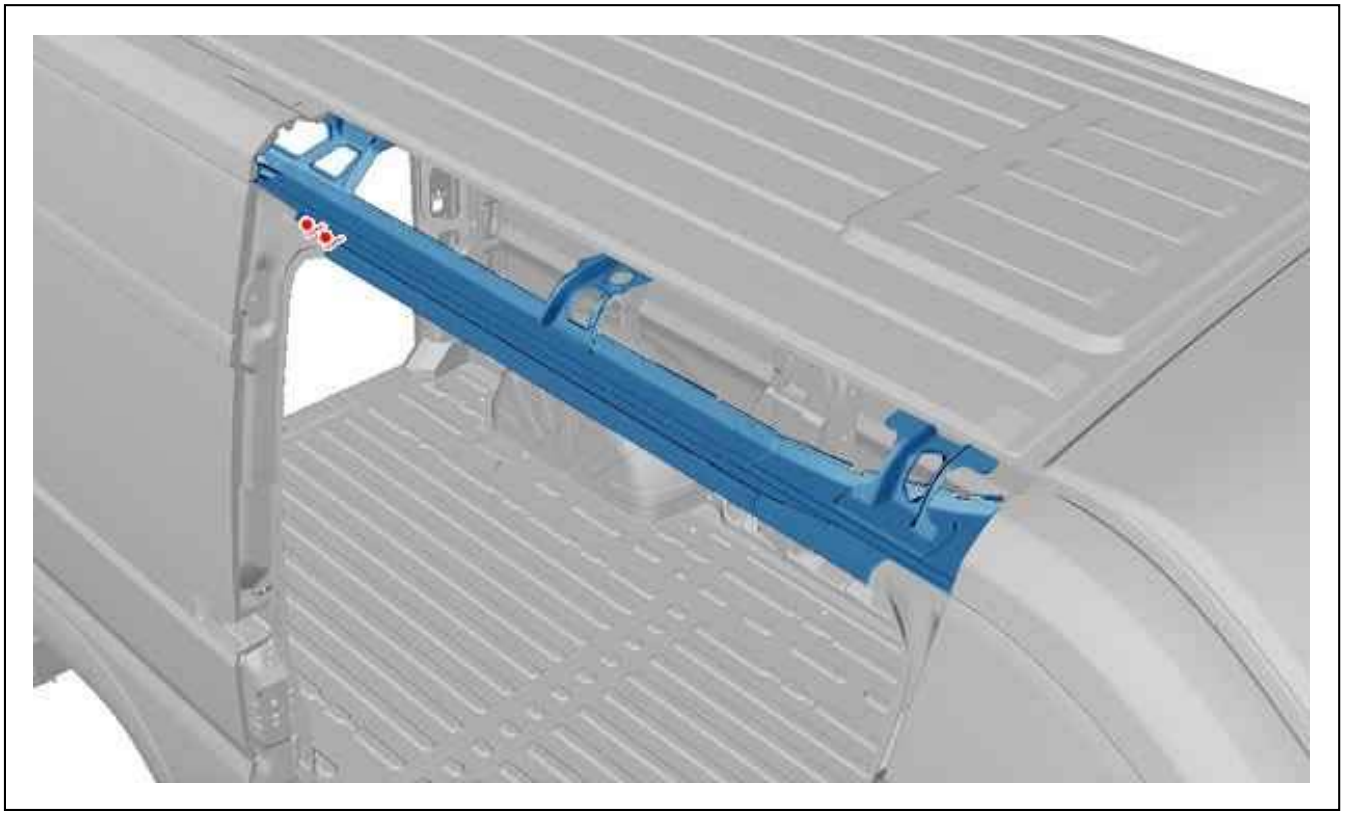

Figure : C4CP20AD

Figure 14.
Apply a phosphate-print layer to the zones laid bare.
Apply a sealing mastic of type " A4" (see the relevant operation).
Apply a sealing mastic of type " A1" (see the relevant operation).

10. Protection

Paint then spray into the hollow sections, product index C5, in the repair zone (see the relevant operation).

11. Reinitialisation

Reconnect the battery.

ESSENTIAL : Perform the operations to be carried out following reconnection of the battery.

STRIPPING-ASSEMBLING : THE SIDE SLIDING DOOR

1. Recommended tools

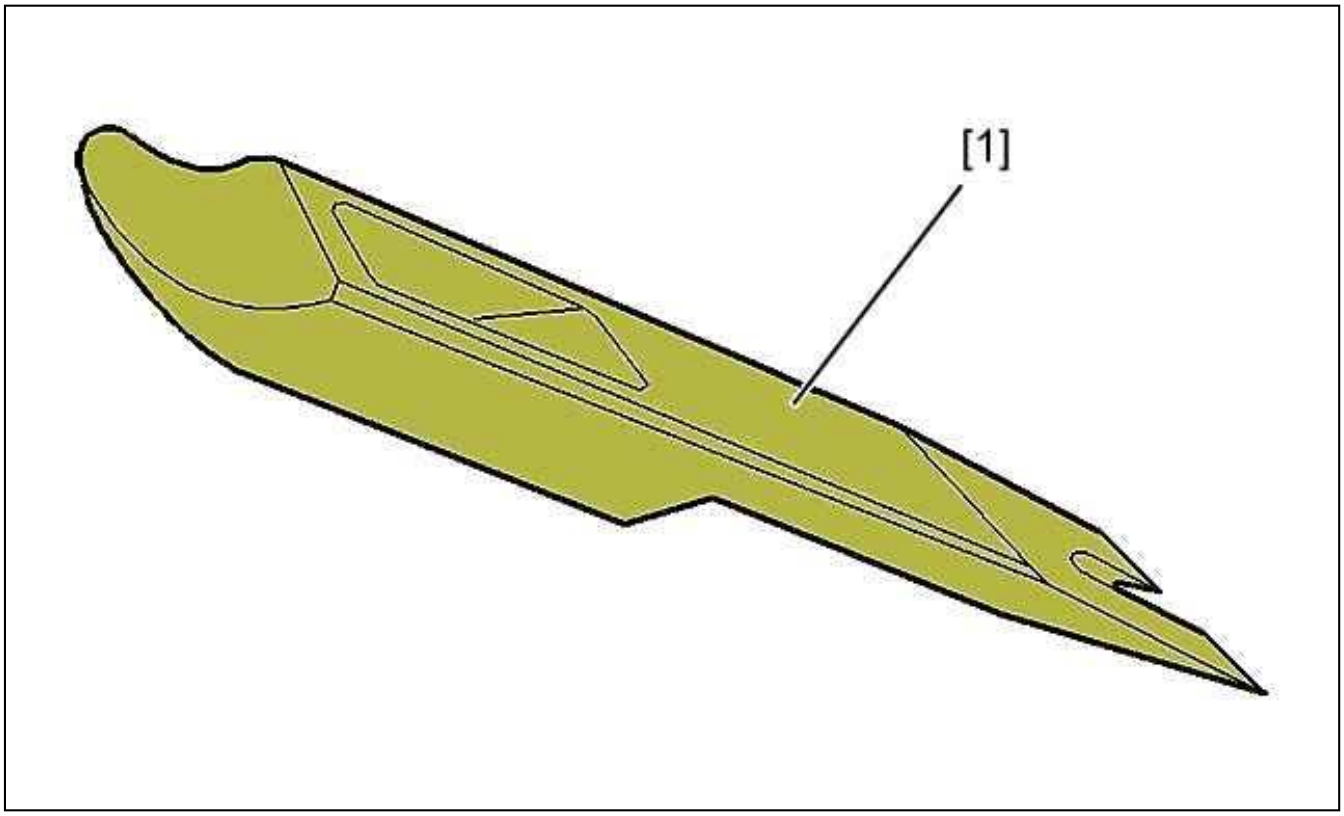

Figure : E5AP2STD

Reference	Designation	Reference
[1]	Unclipping lever	(-).1330-E
	Tool for removing side mouldings	8205-T.E

2. Additional operation

Remove the sliding side door.

3. Stripping

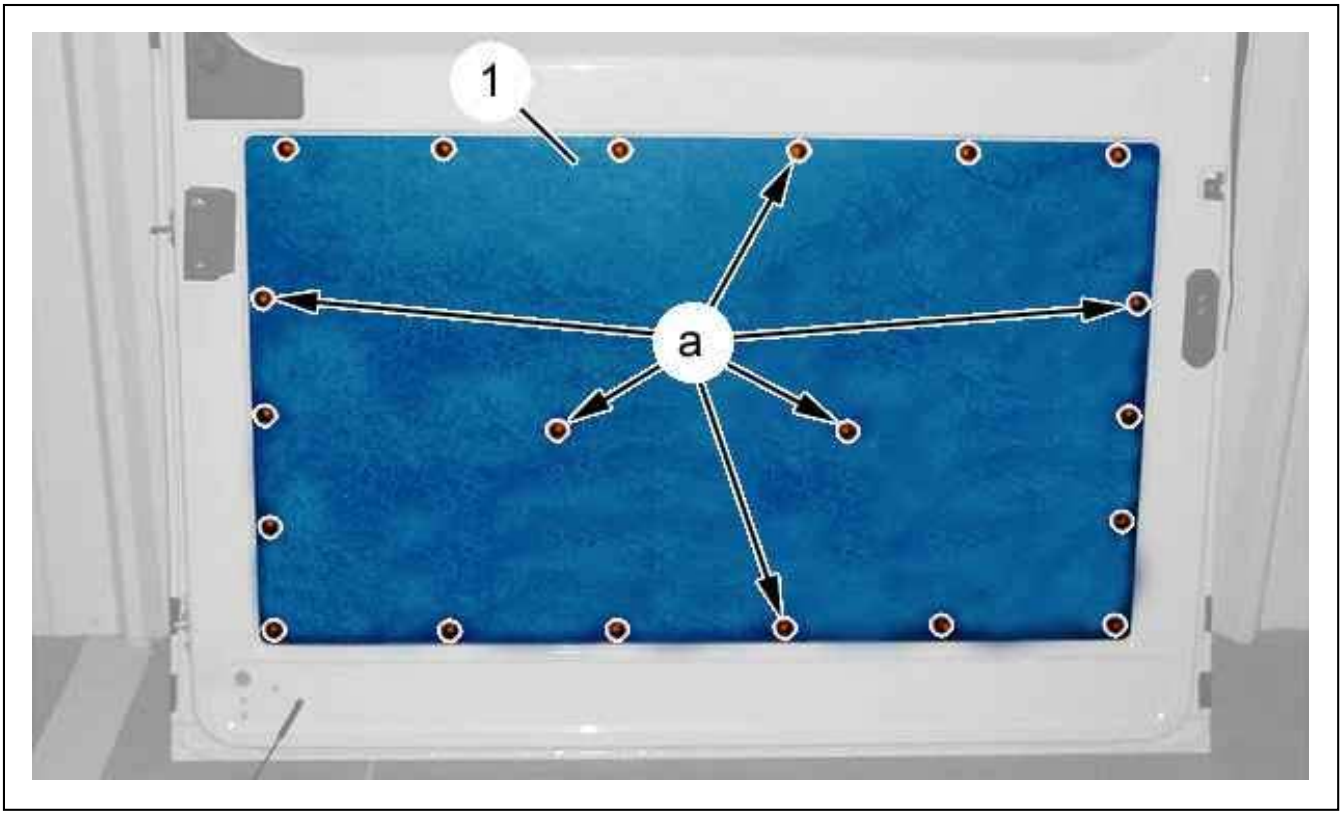

Figure : C5GP0LLD

Unclip the trim (1) (at "a") ; Using tool [1].
Remove the trim (1).

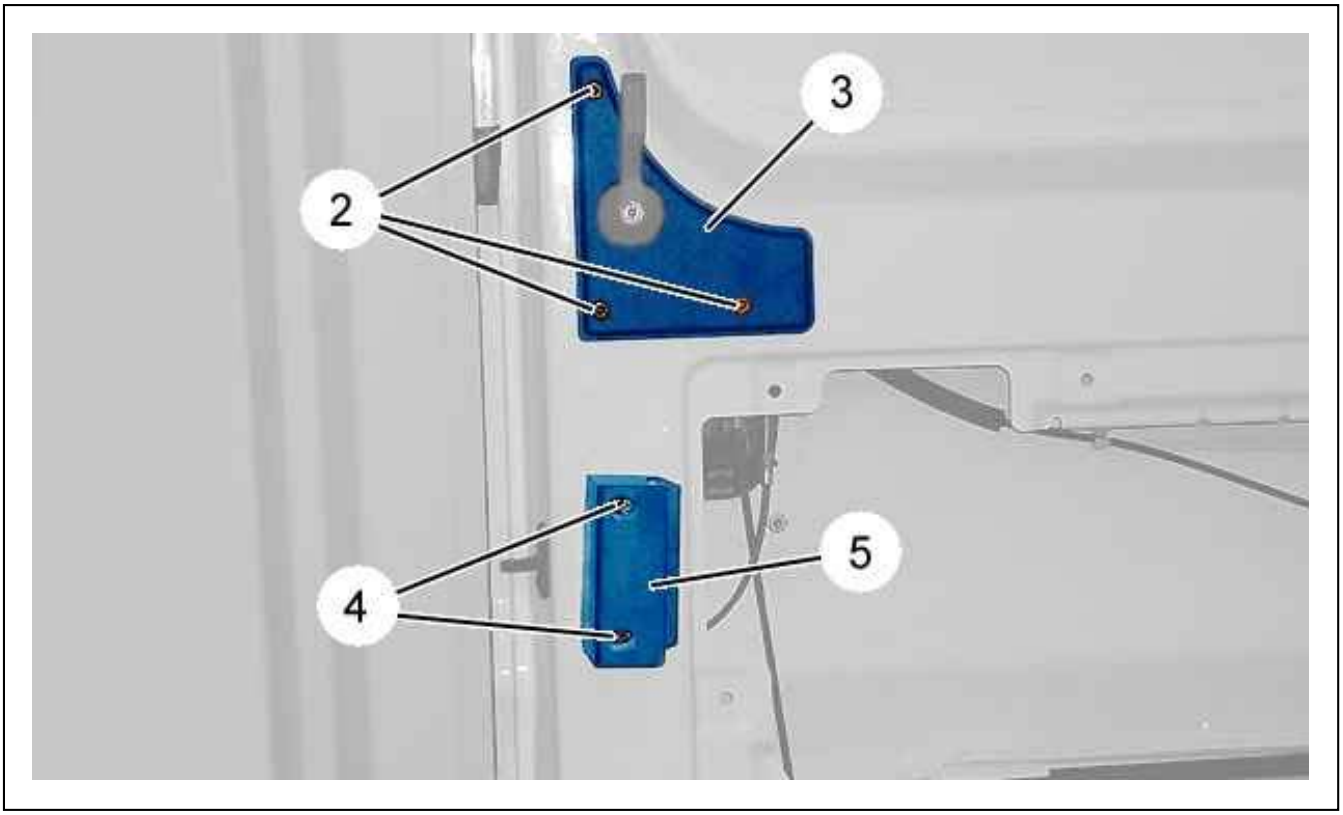

Figure : C5DP05SD

Remove :

- The securing bolts (4)
- The stop (5)
- The handle support (3) fixing bolts (2)

Partially detach the handle support (3).

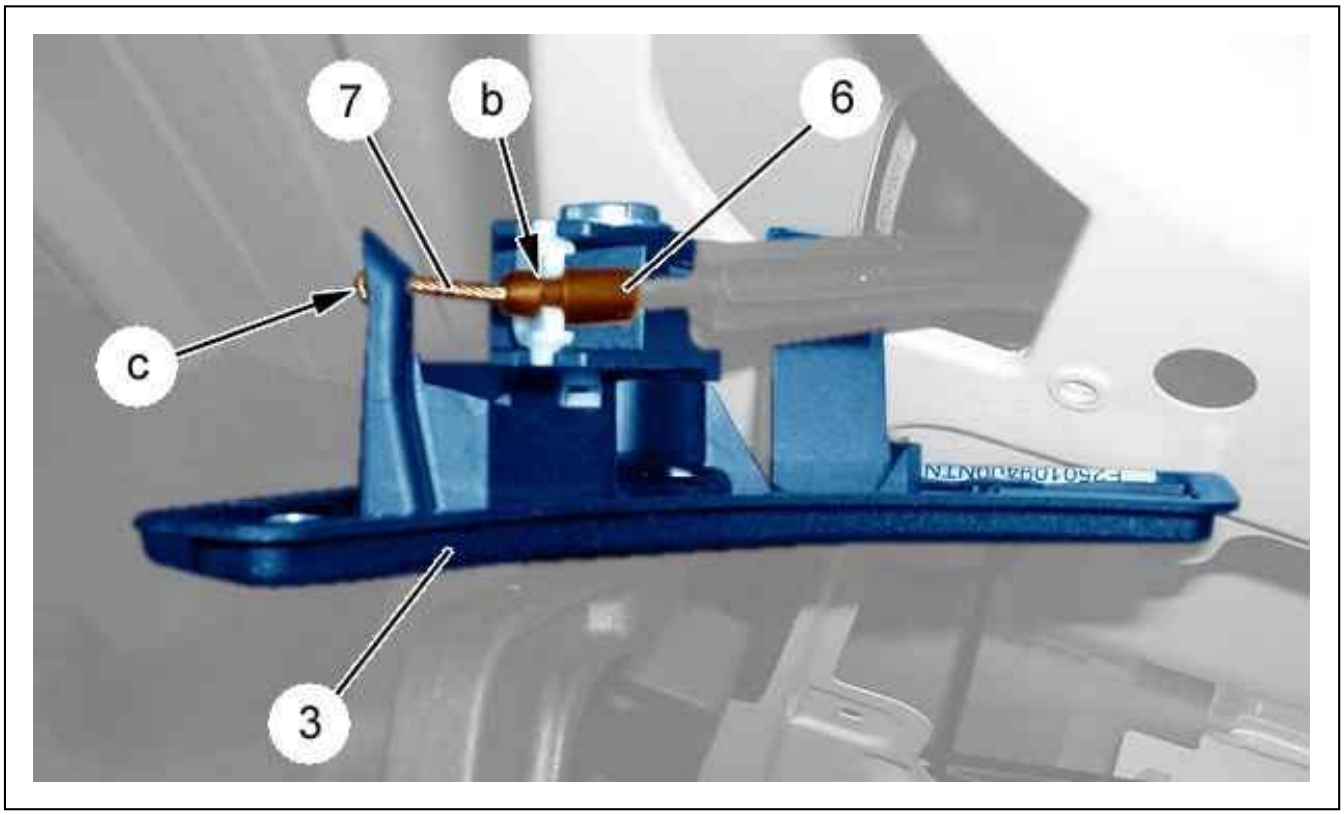

Figure : C5DP05TD

Unclip the cable guide (6) (at "b").
Release the cable (7) (at "c").
Remove the handle (3).

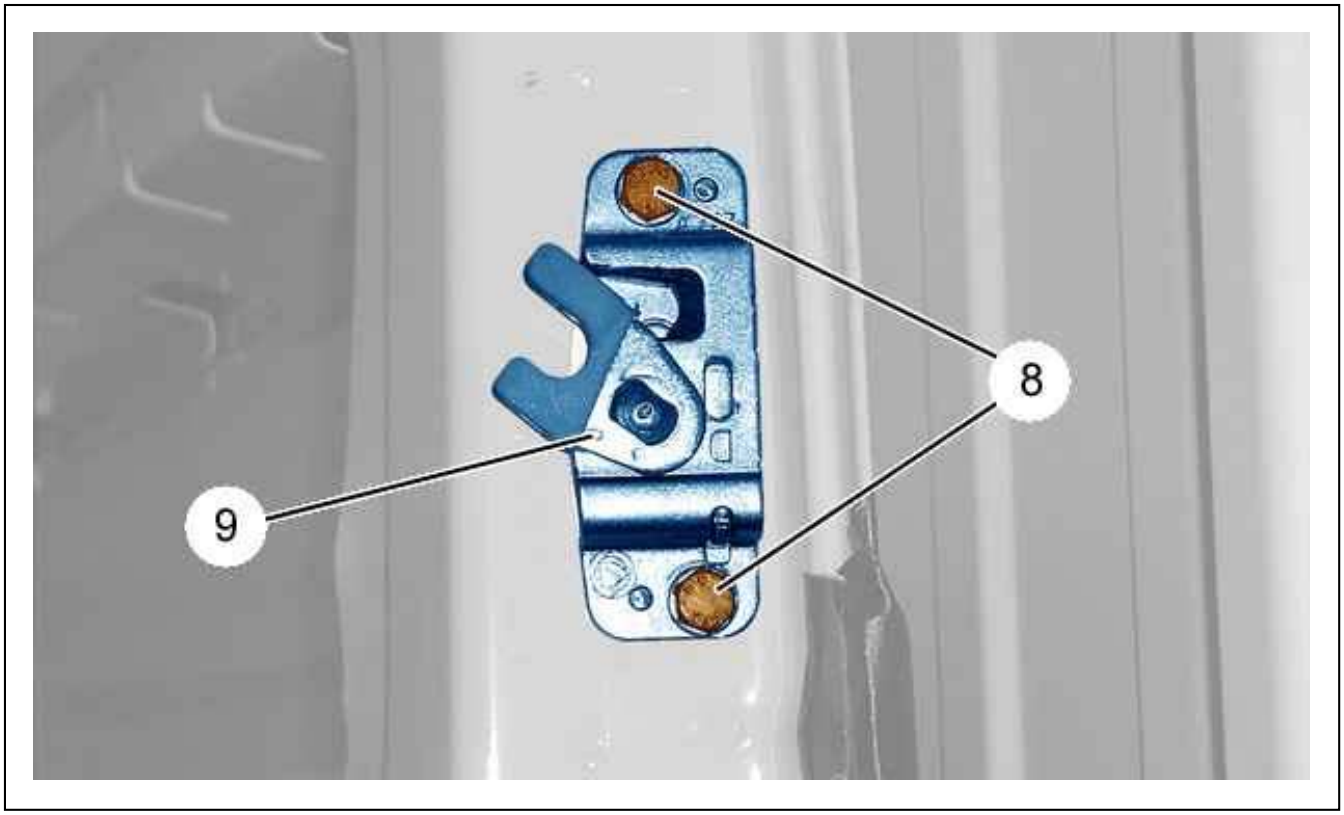

Figure : C5DP05UD

Remove the upper lock (9) bolts (8).
Partially detach the upper lock (9).

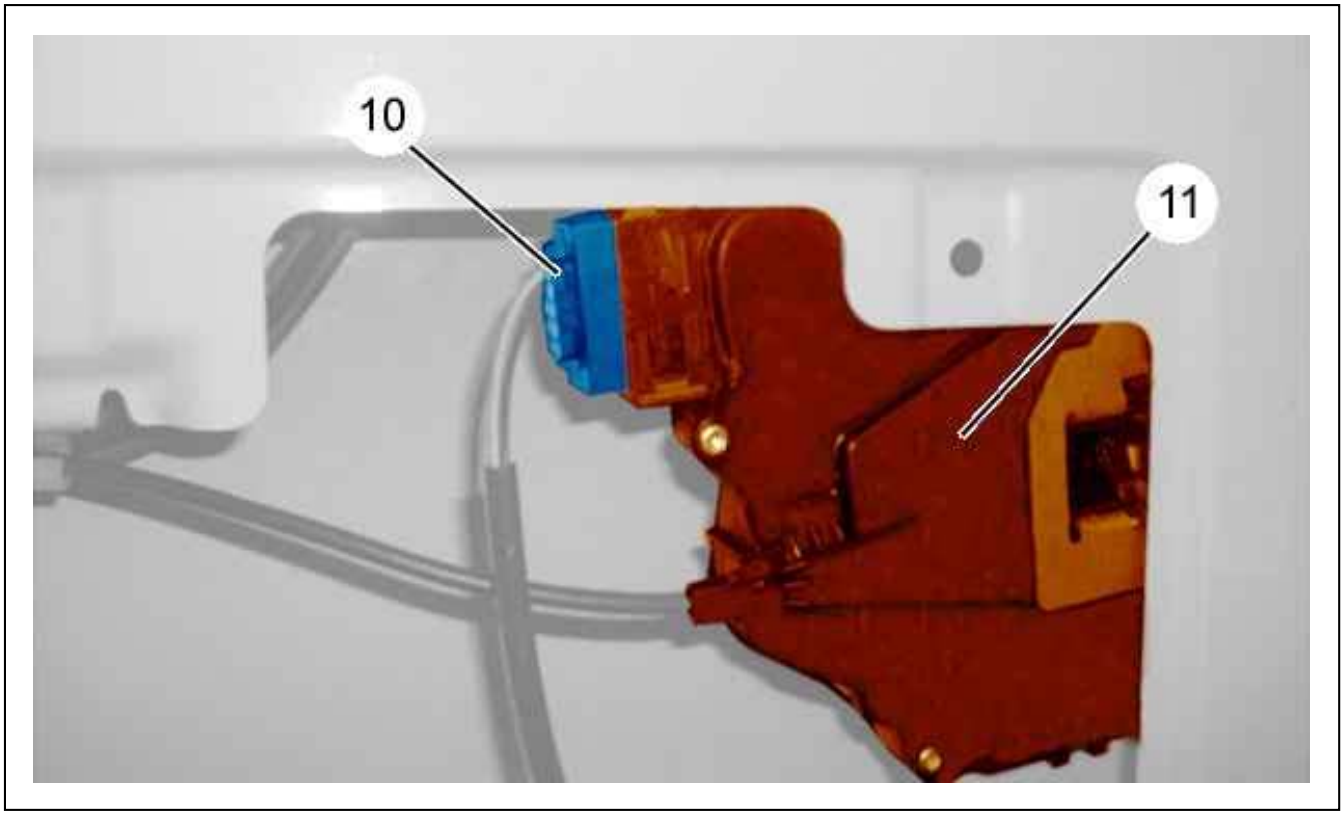

Figure : C5DP05VD

Disconnect the lower lock (11) connector (10).

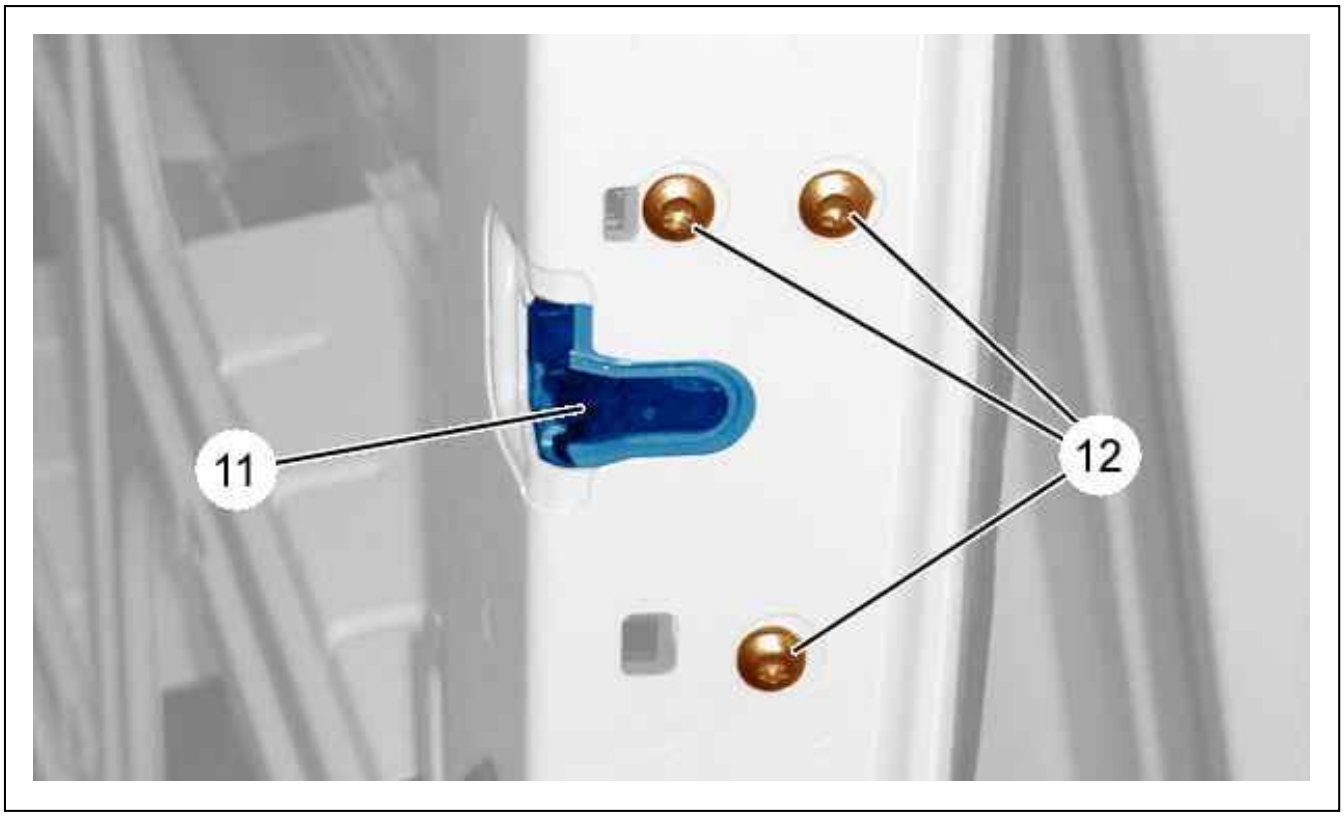

Figure : C5DP05WD

Remove the lower lock (11) bolts (12).
Partially detach the lower lock (11).

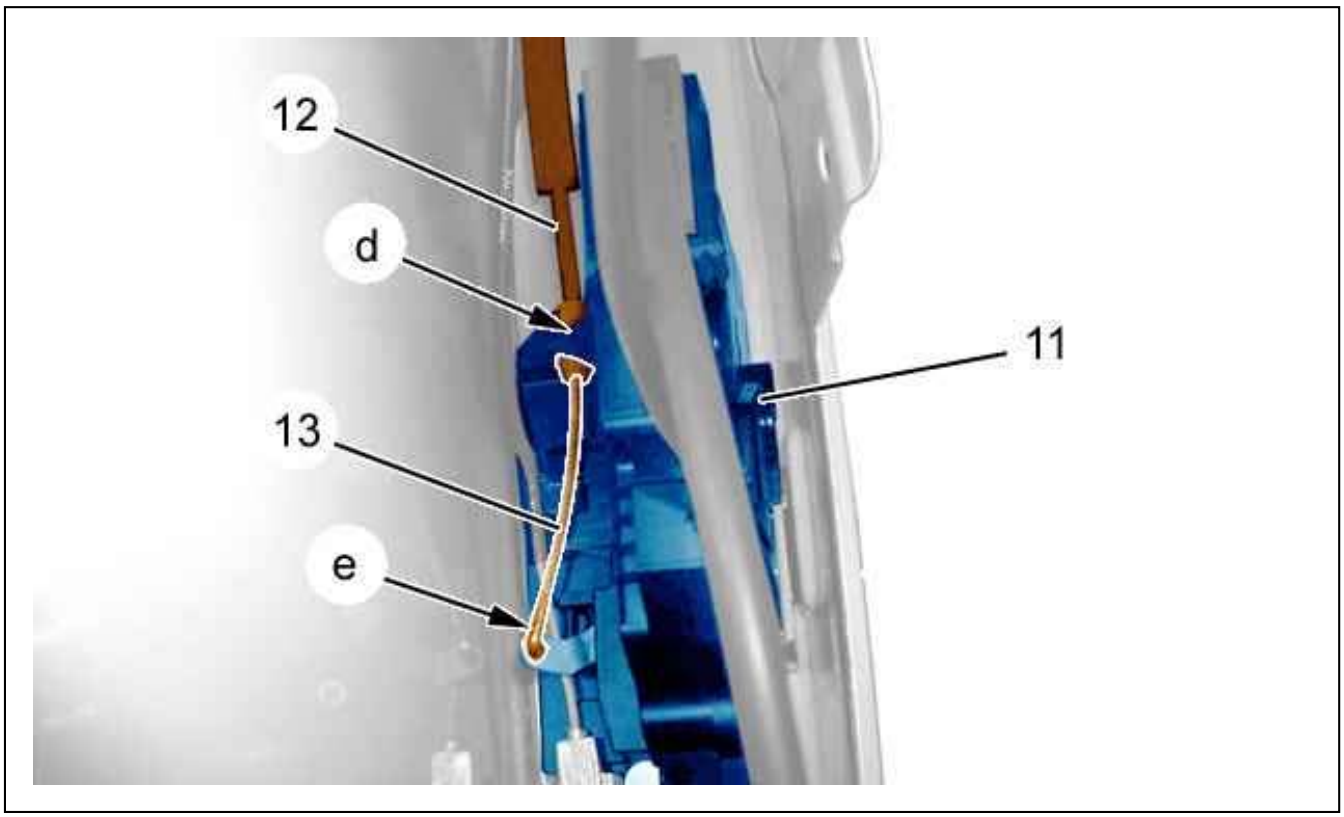

Figure : C5DP05XD

Unclip the cable guide (12) (at "d").

Remove the cable (13) (at "e").
Detach the lower lock (11).
Remove the upper lock (9).

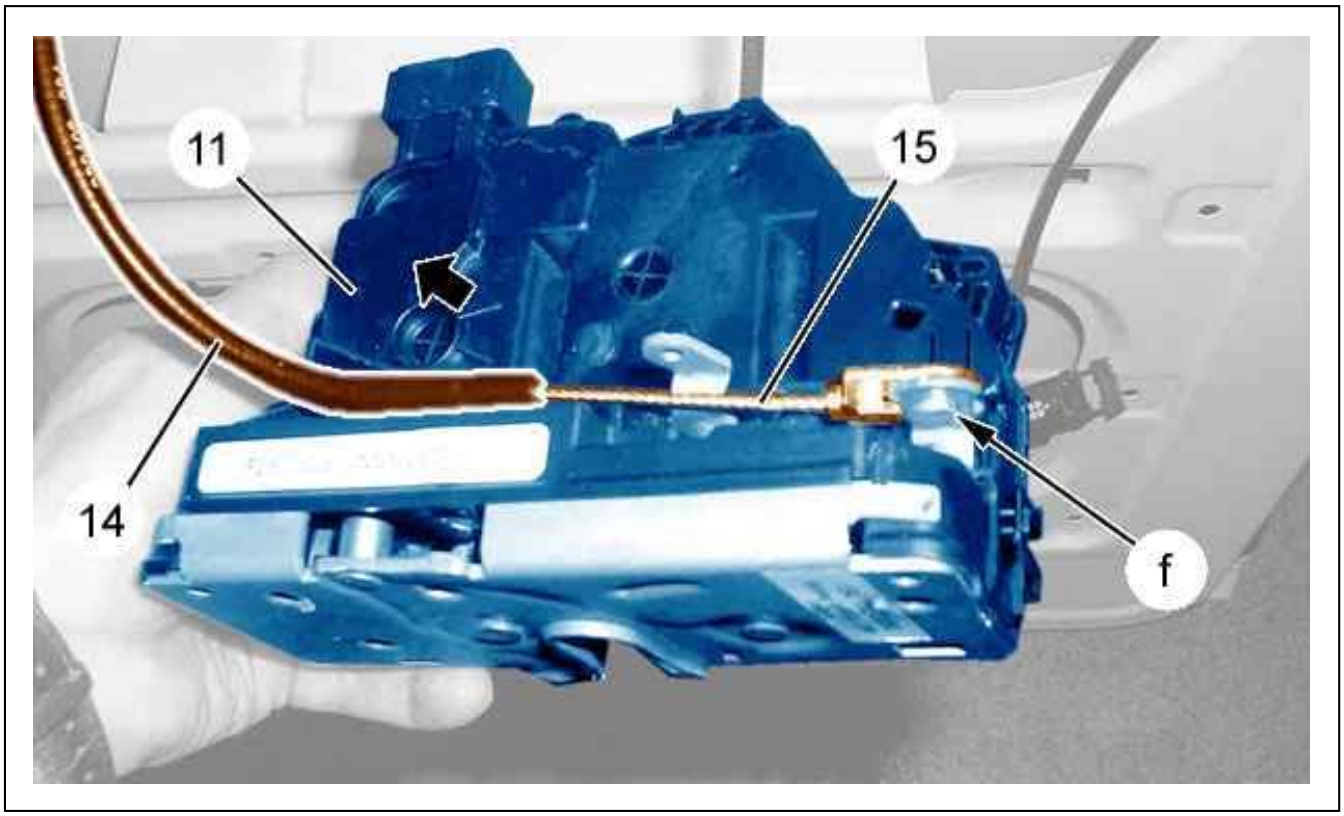

Figure : C5DP05YD

Remove the cable guide (14) (following the arrow).
Unclip the cable (15) (at "f").
Remove the lower lock (11).

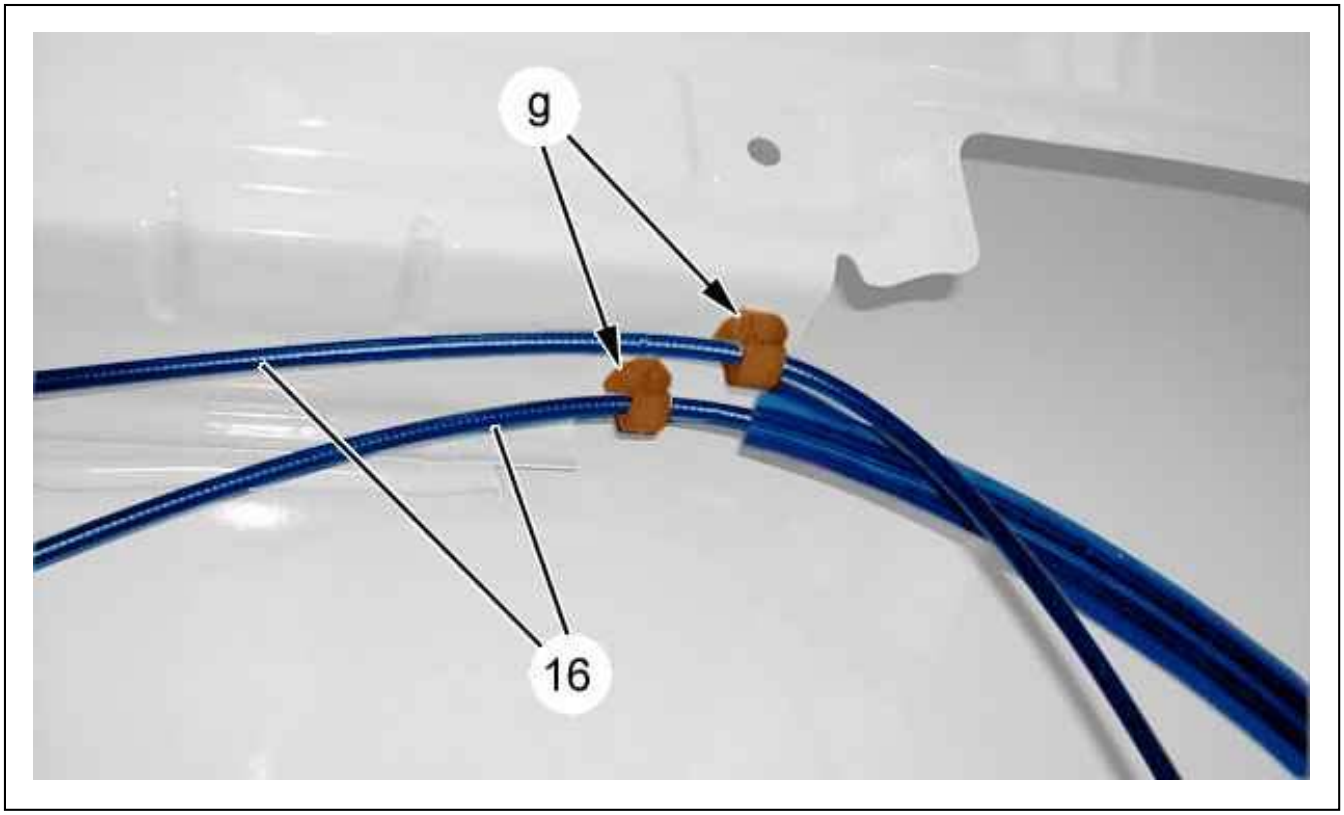

Figure : C4CP1JMD

Unclip the cable sleeves (16) (at "g").

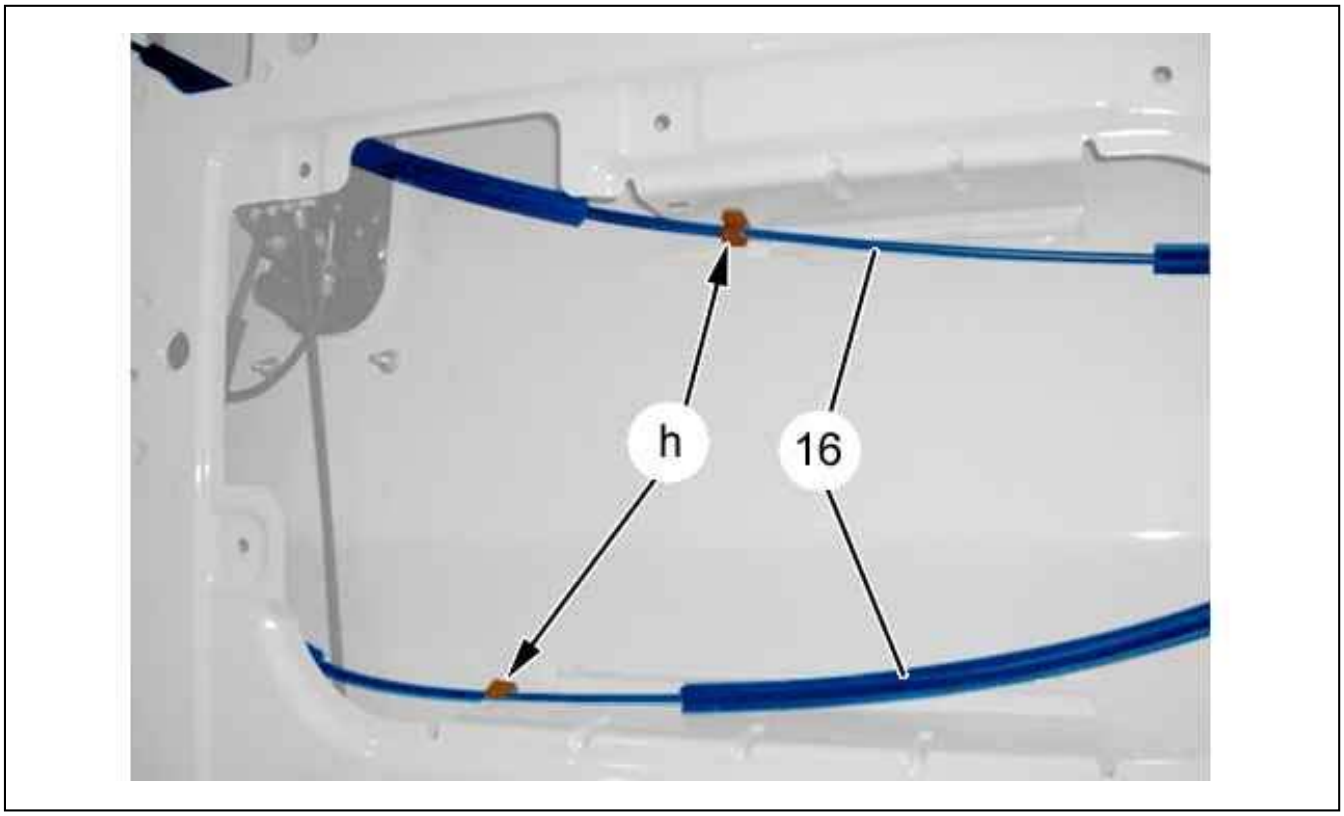

Figure : C4CP1JND

Unclip the cable sleeves (16) (at "h").

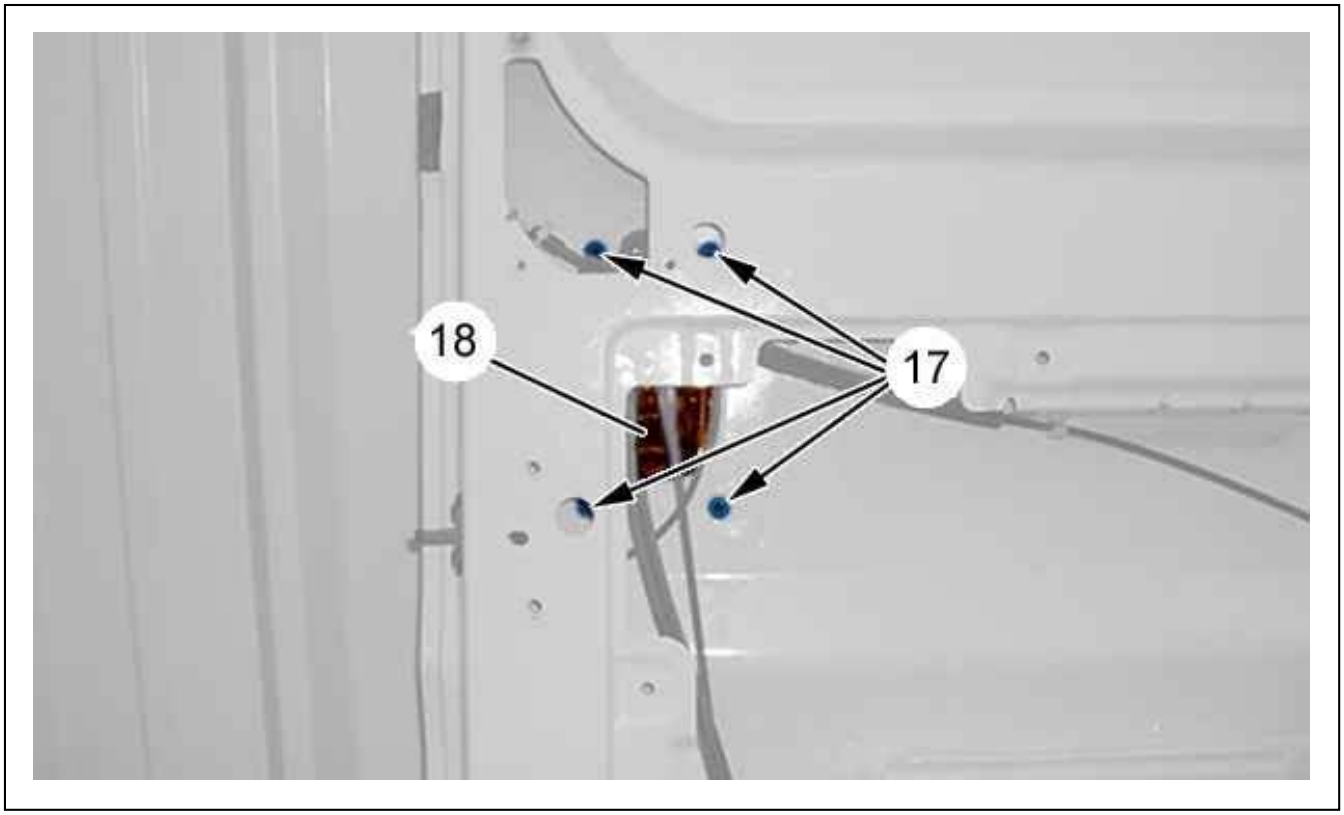

Figure : C4CP1JPD

Remove :

- The bolts (17)
- The exterior handle (18) and the cable sleeves

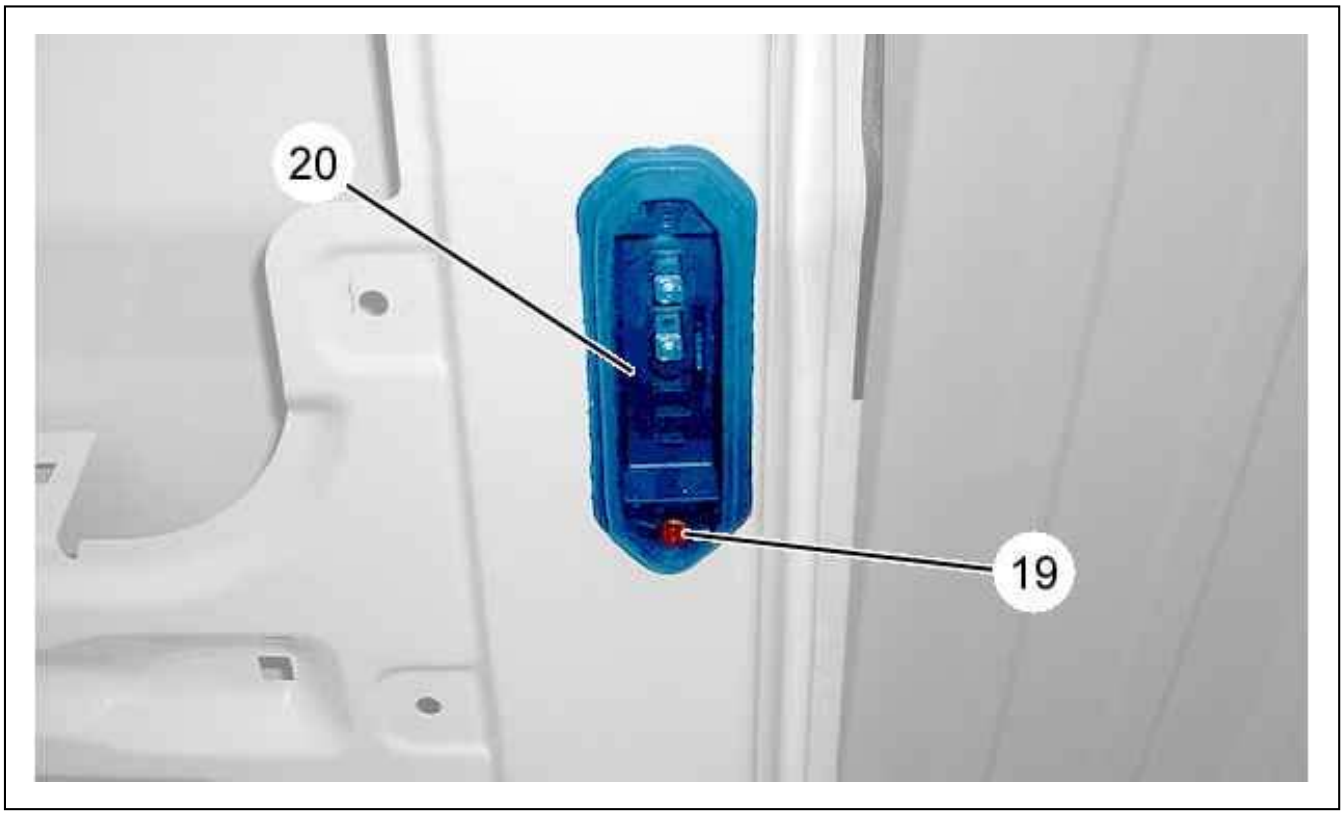

Figure : C4CP1JQD

Remove :

- The fixing (19)
- The door switch (20)

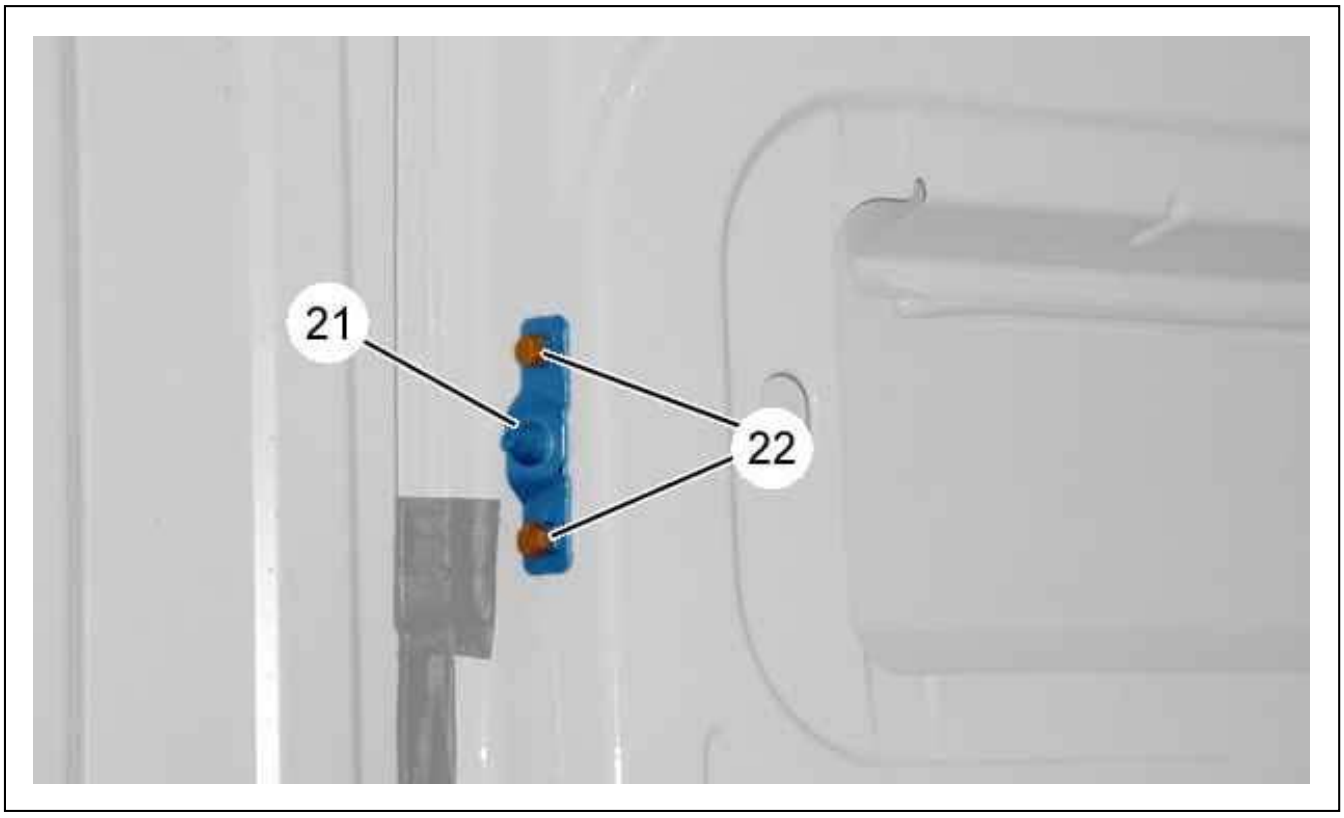

Figure : C4CP1JRD

Remove :

- The bolts (22)
- The upper door guide (21)

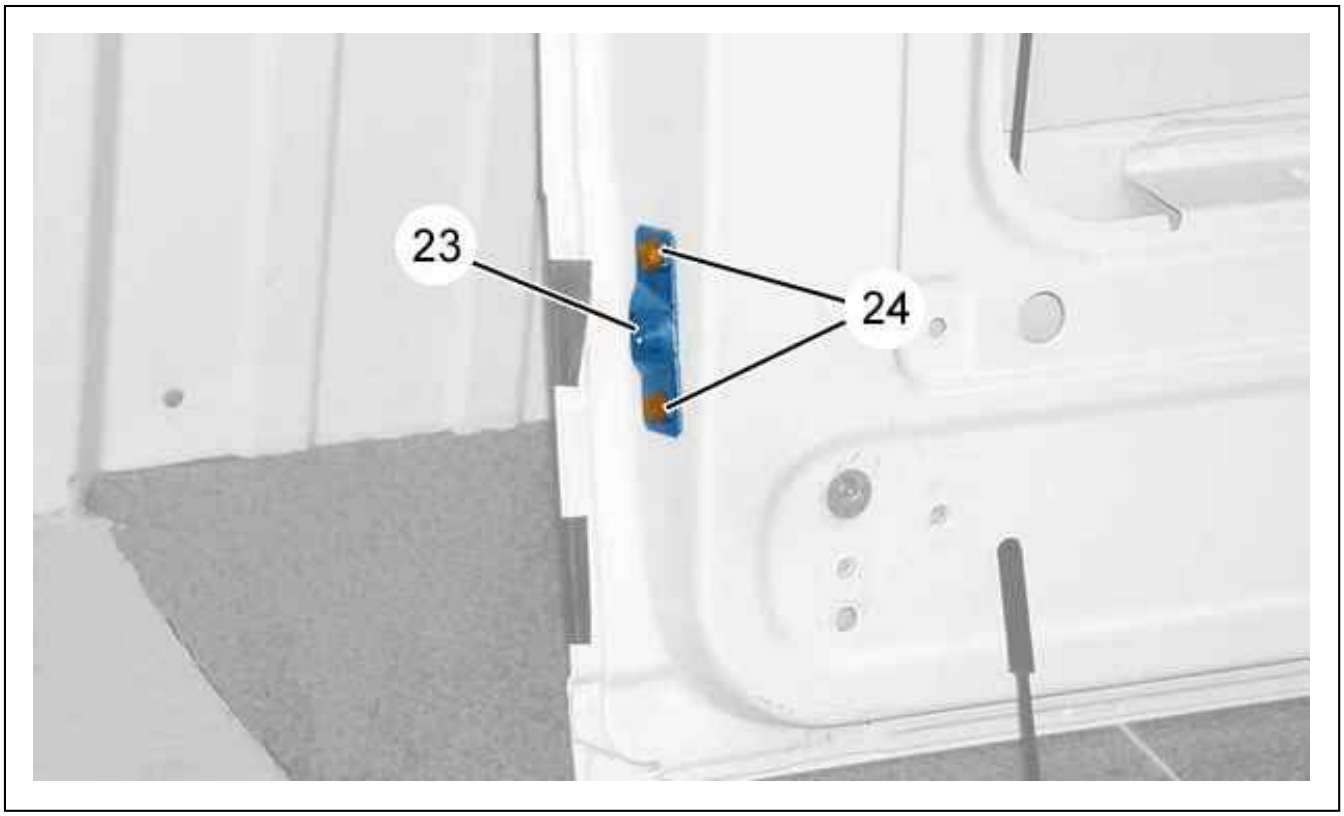

Figure : C4CP1JSD

Remove :

- The bolts (24)
- The lower door guide (23)

4. Re-assembling

Carry out the re-trim operations in the reverse order to the stripping operations.
Check all the equipment works.

STRIPPING - RE-ASSEMBLING : REAR RIGHT DOOR

1. Recommended tools

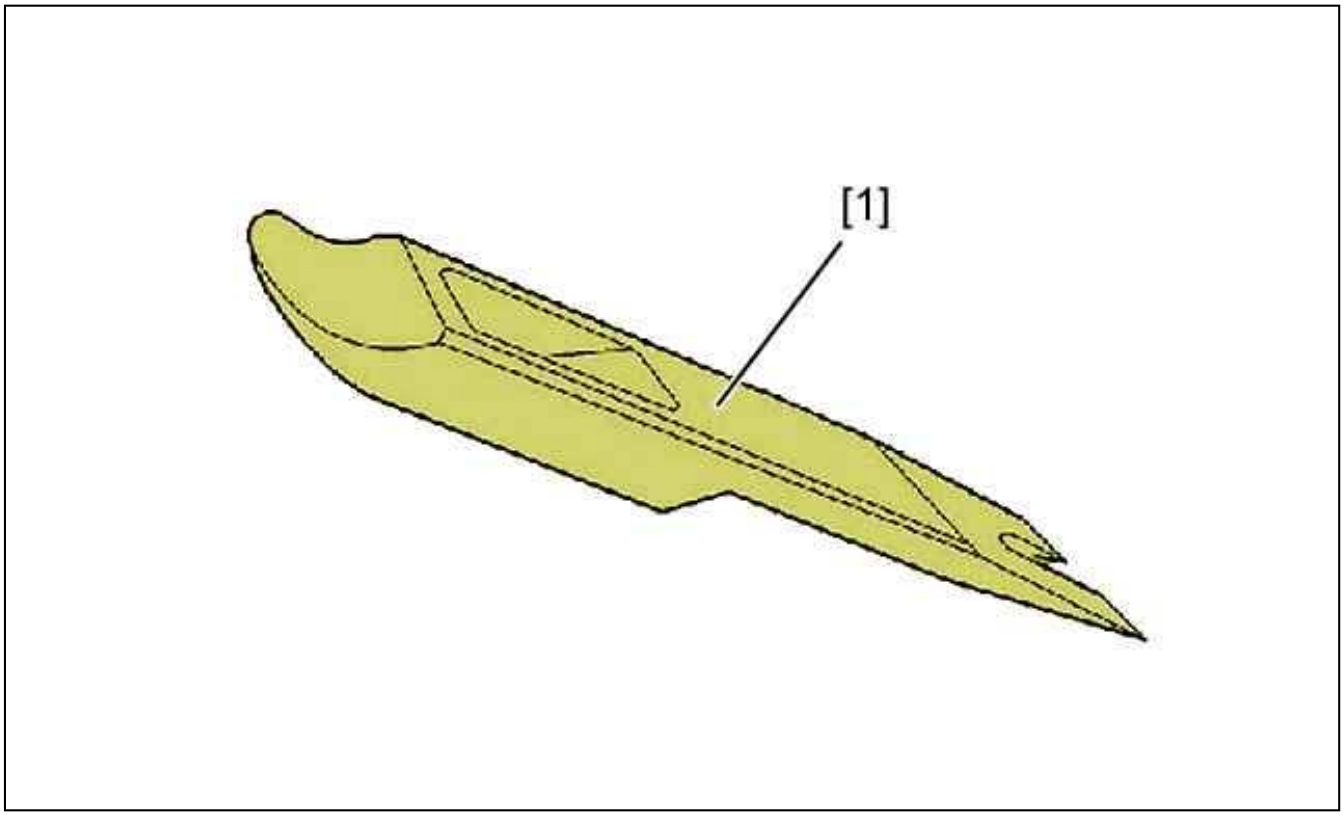

Figure : E5AP2THD

Reference	Designation	Reference
[1]	Unclipping lever	(-).1330-E
	Tool for removing side mouldings	8205-T.E

2. Stripping

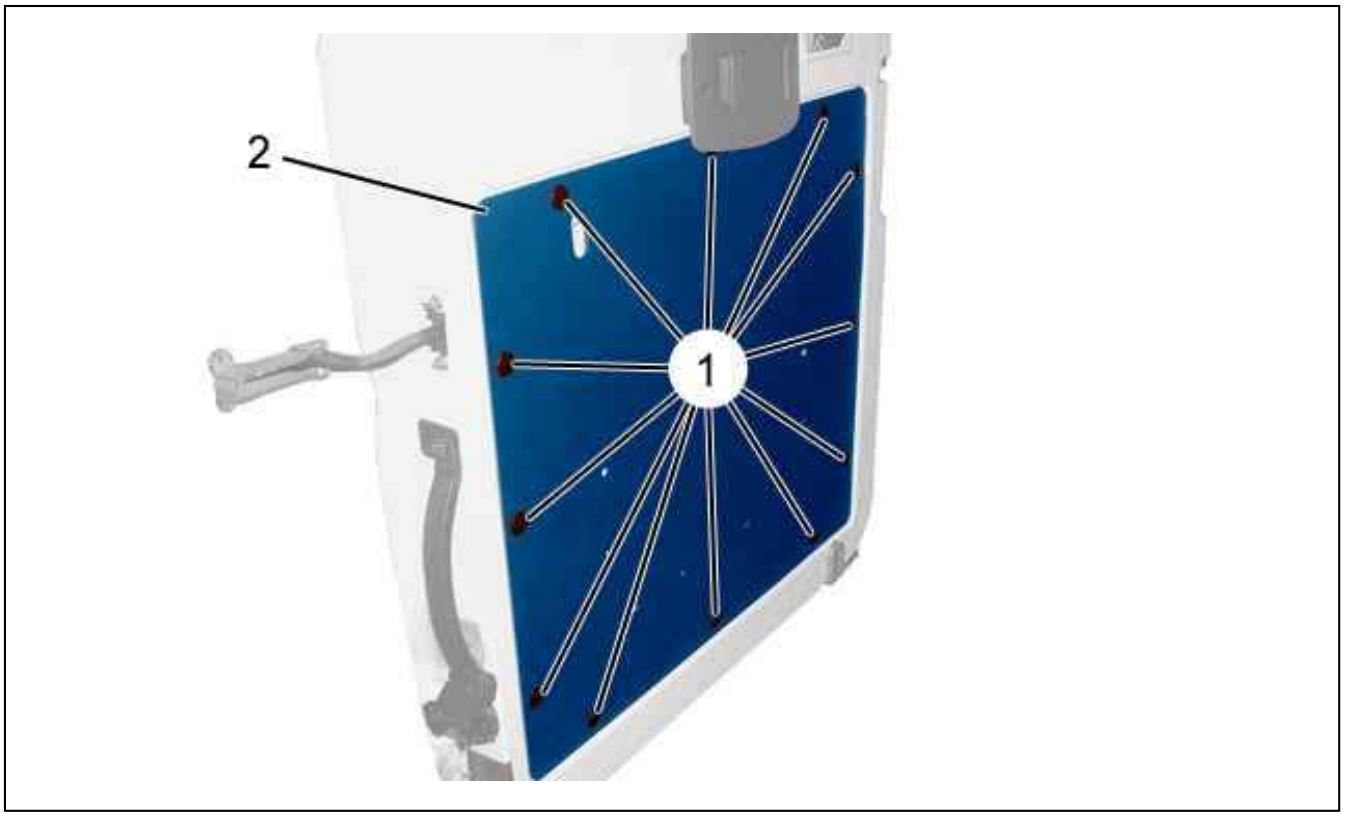

Figure : C5GP0MYD

Unclip the clips (1) ; Using tool [1].
Remove the trim (2).

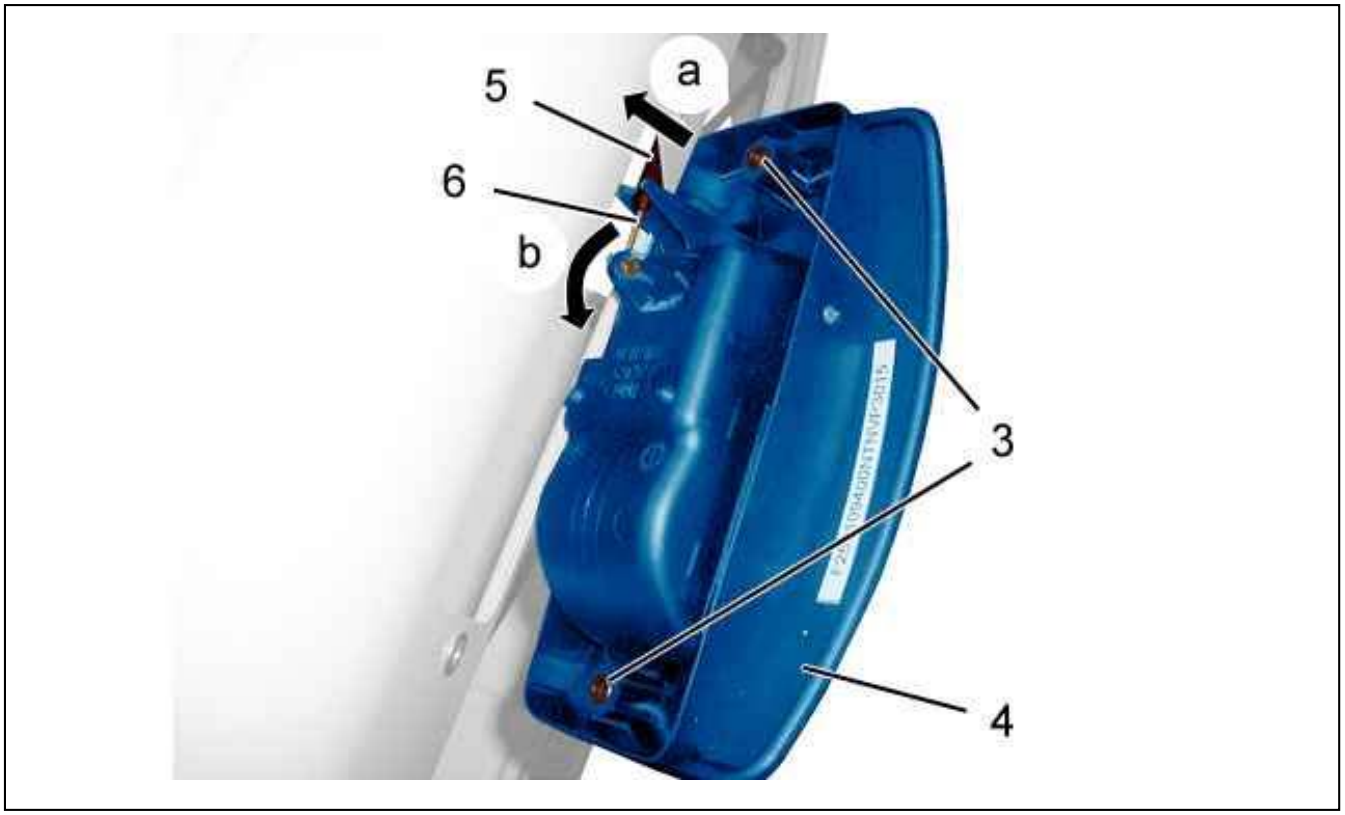

Figure : C5DP06ED

Remove :

- The screws (3) of the handle (4)
- The cable guide (5) (following "a")

Pivot the cable (6) (following "b").
Remove the interior handle (4).

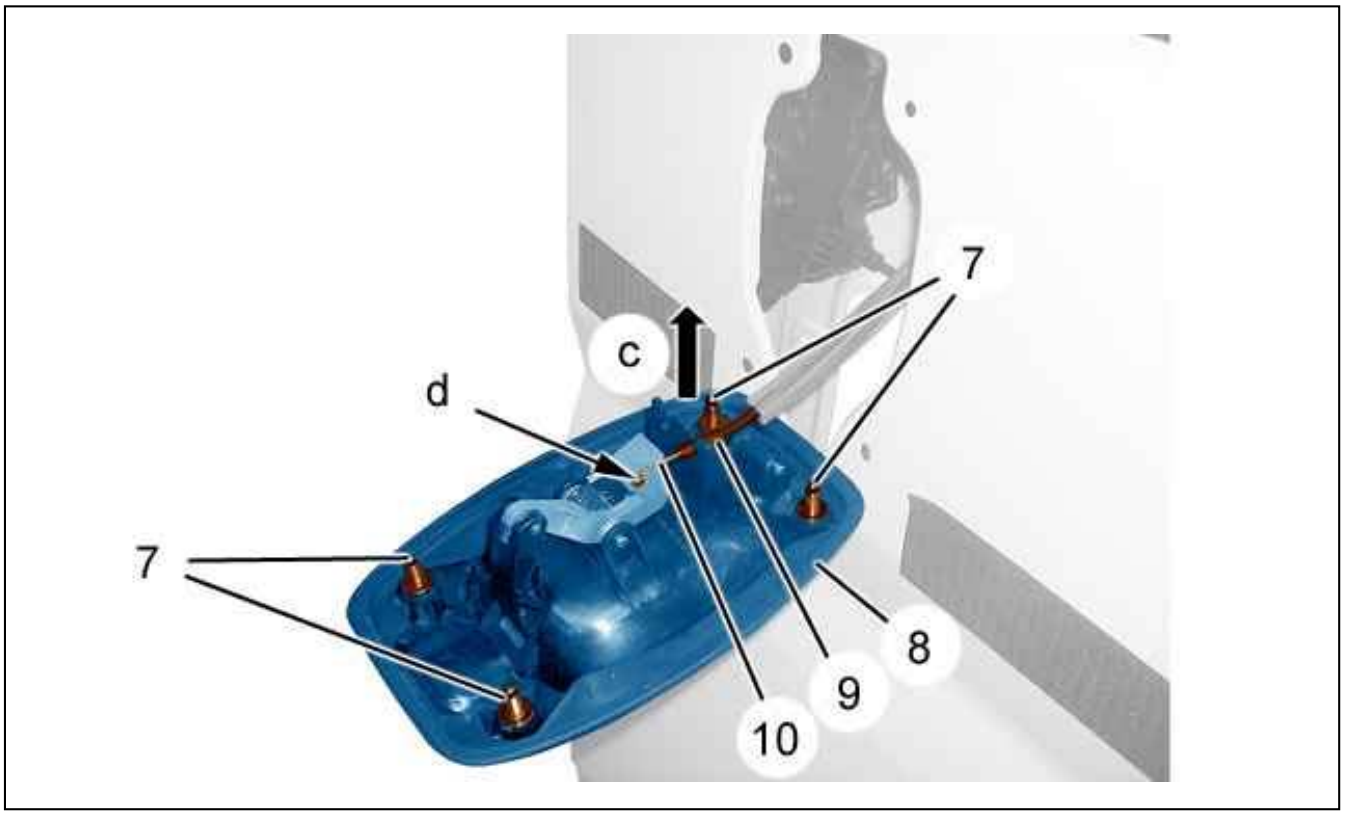

Figure : C5DP06FD

Remove the screws (7) of the exterior handle (8).
Detach the sleeve (9) (following "c").
Release the cable (10) (at "d").
Remove the exterior handle (8).

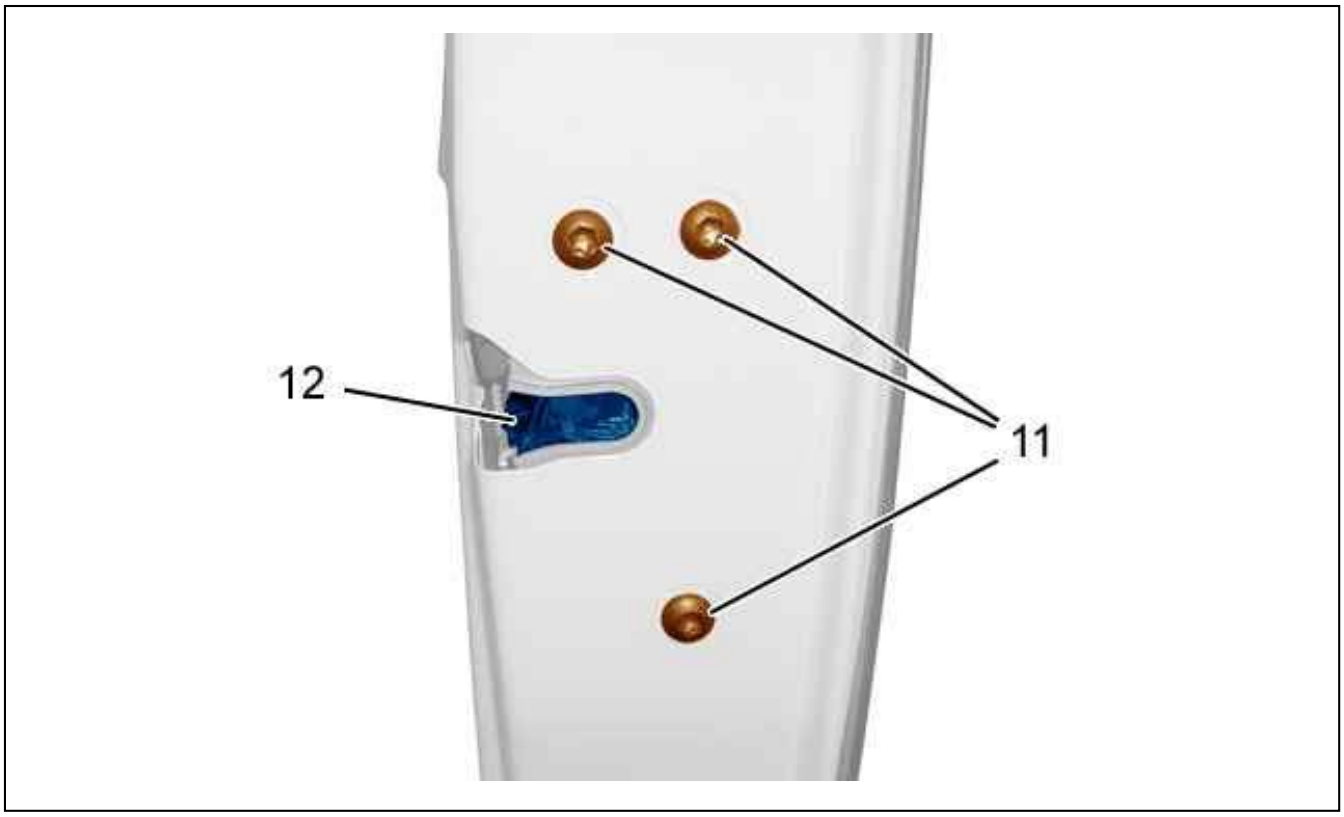

Figure : C4CP1PTD

Remove the screws (11) of the lock (12).



Figure : C4CP1RND

Disconnect the connector (following "e").

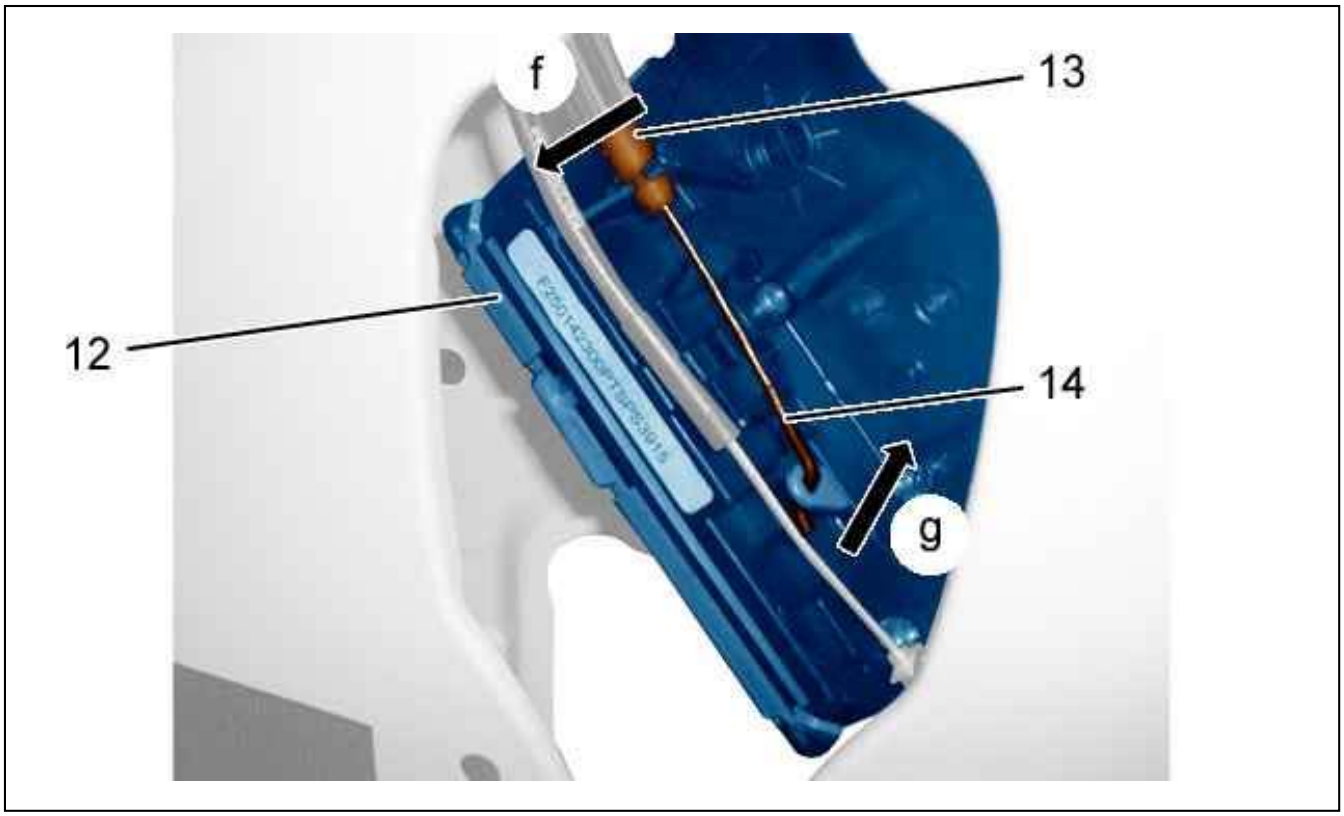

Figure : C5DP06GD

Remove :

- The cable guide (13) (following "f")
- The cable (14) (following "g")

Remove the lock (12).

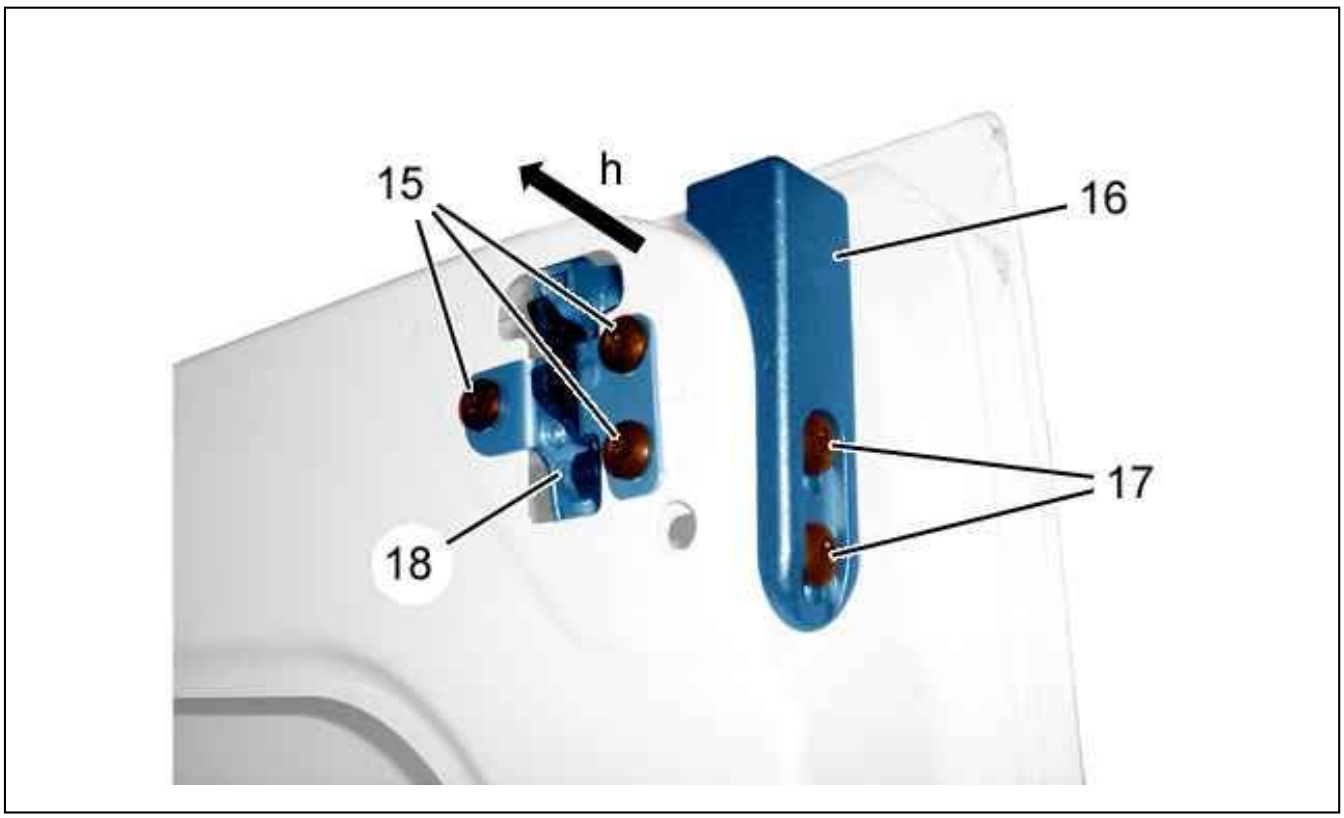

Figure : C4CP1RPD

Remove :

- The bolts (15)
- The top closing mechanism (18) (following "h")
- The bolts (17)
- The top abutment (16)

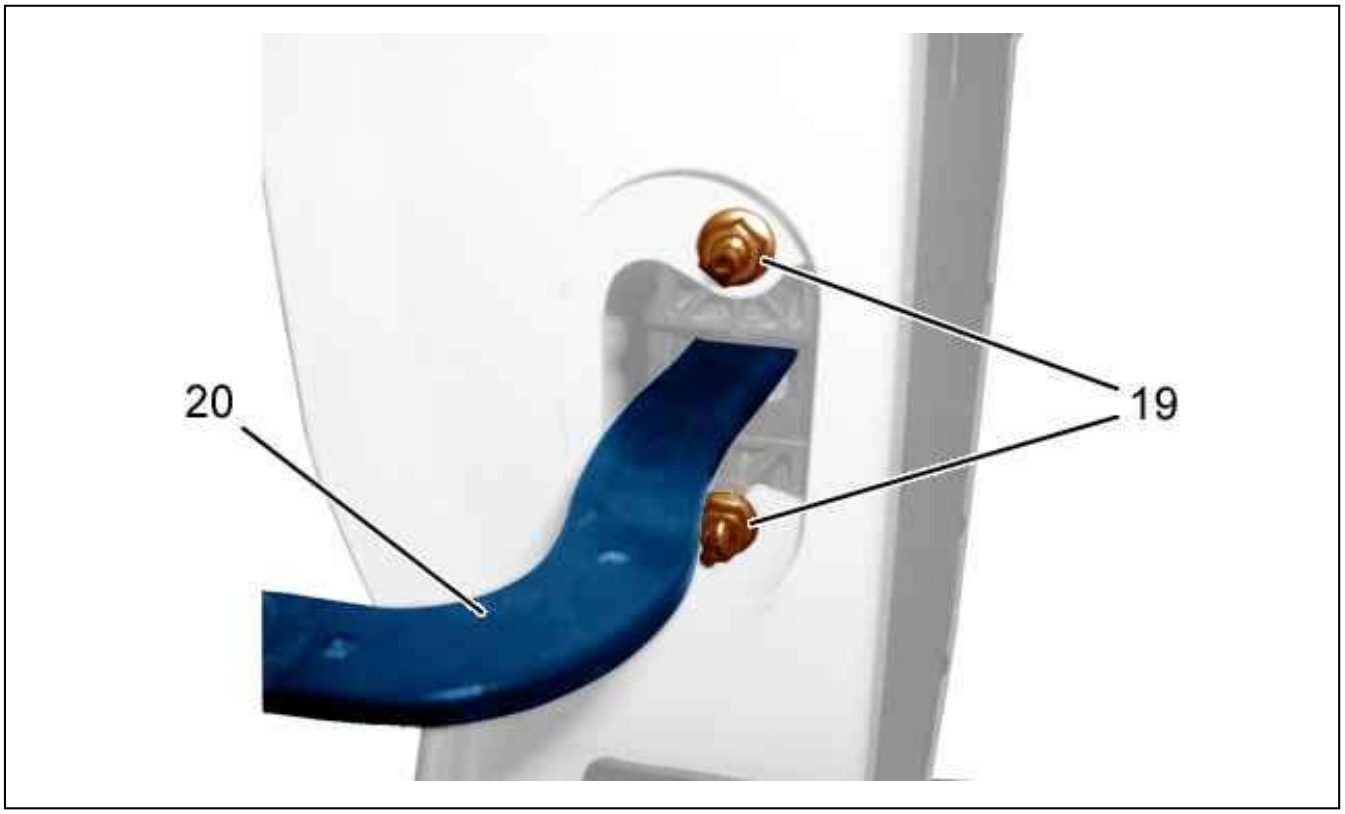

Figure : C4CP1RQD

Remove :

- The bolts (19)
- The door check strap (20) (see the relevant operation)

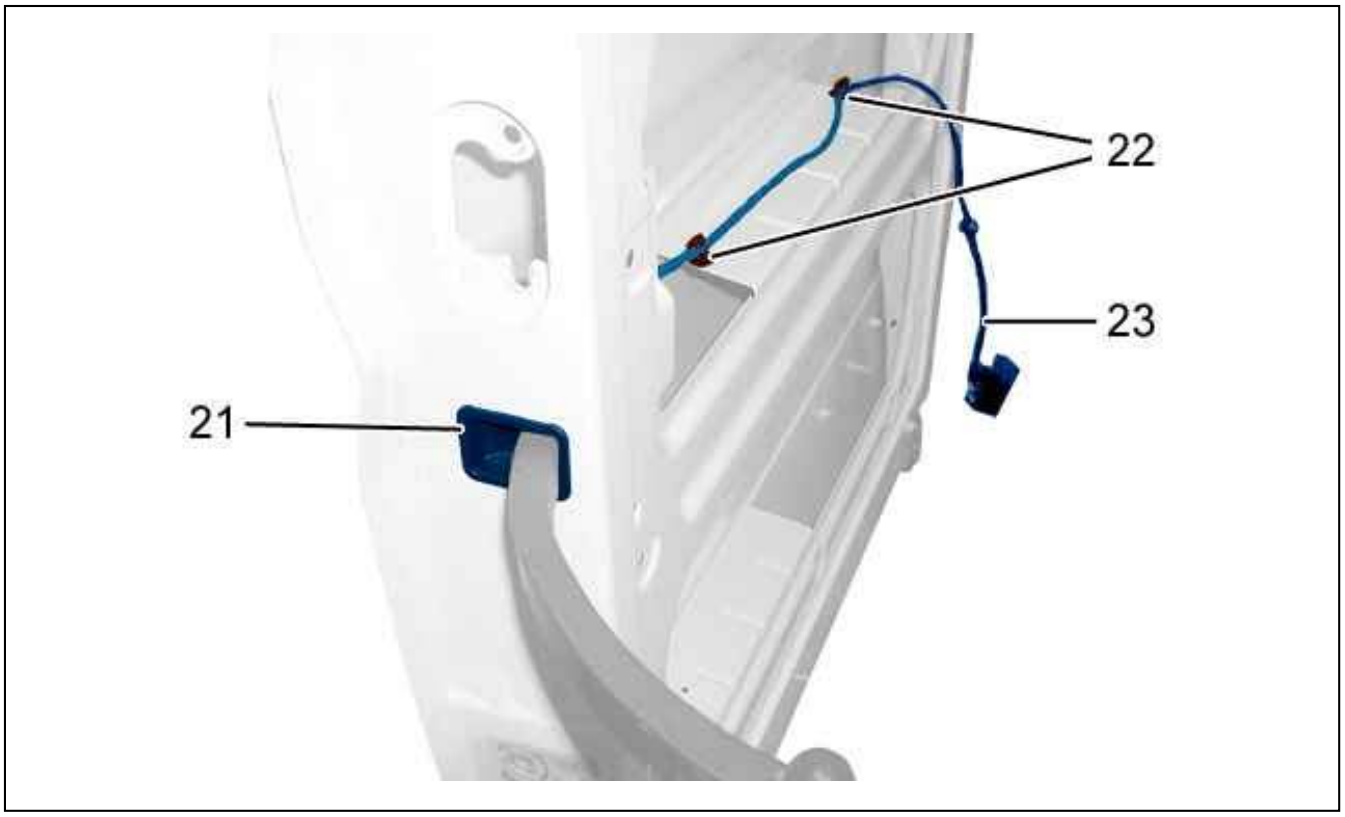

Figure : C4CP1RRD

Remove the clips (22).
Detach the protection (21) (see the relevant operation).
Remove the electric harness (23).

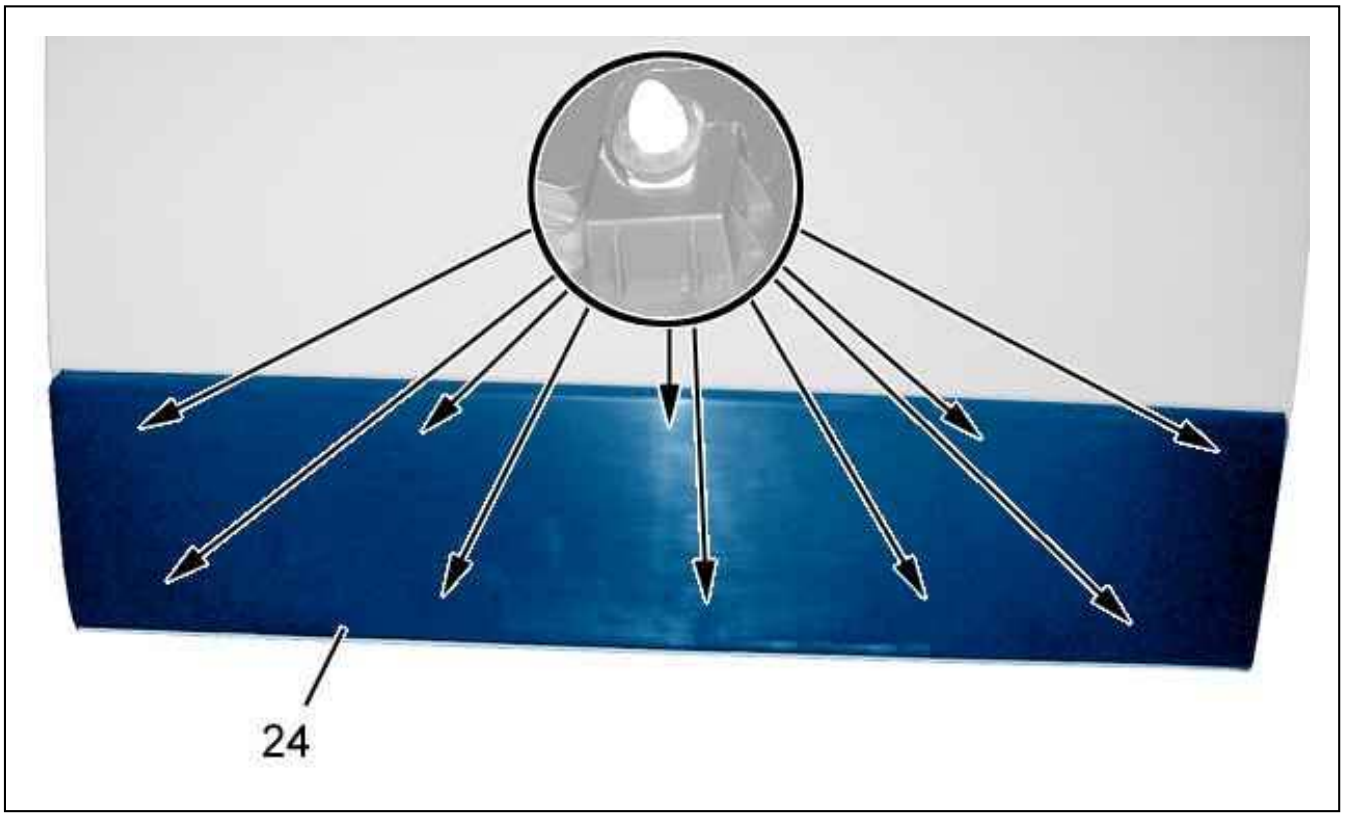

Figure : C4CP1RSD

Unclip the rear door rubbing strip (24) ; Using tool [1].
Remove the rear door rubbing strip (24).

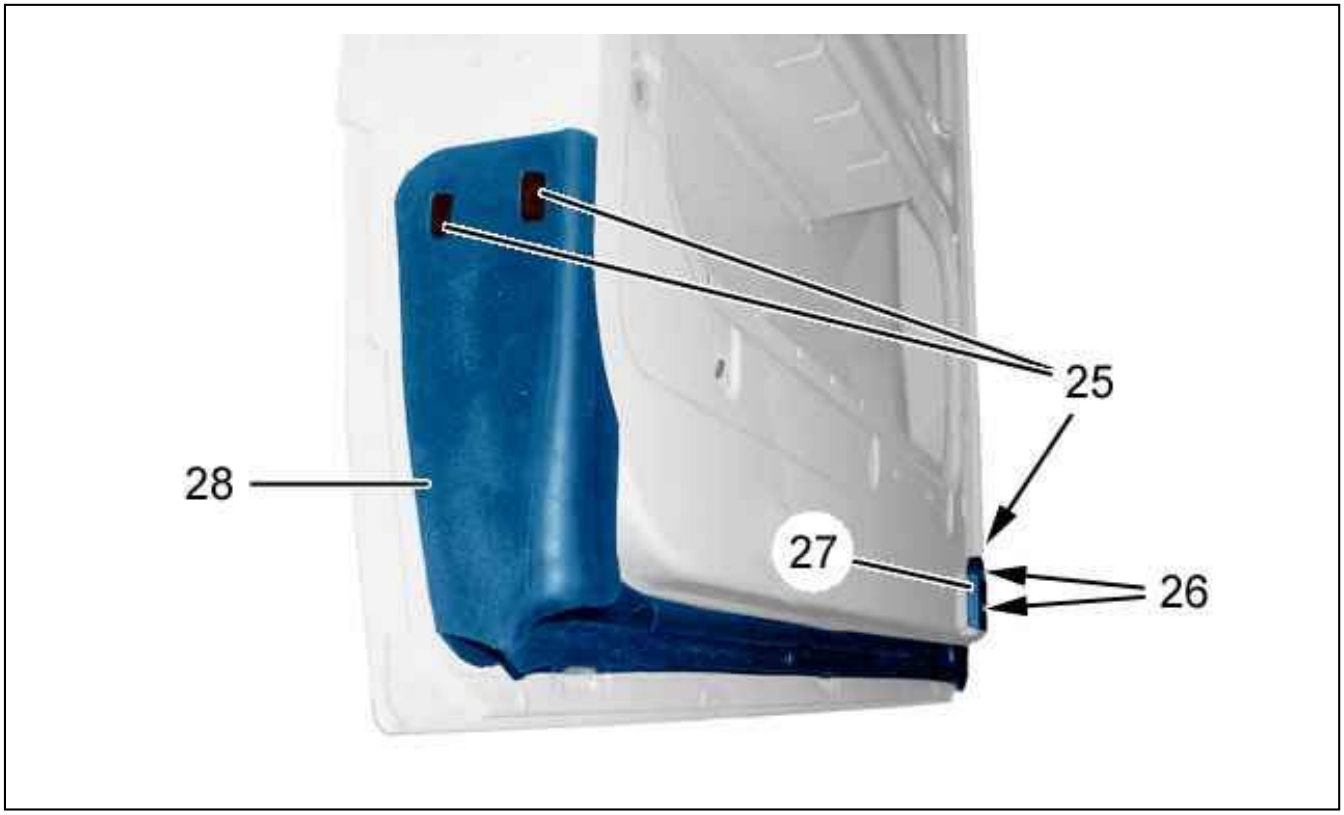

Figure : C4CP1RTD

Remove :

- The mountings (25)
- The door sill seal (28)
- The bolts (26)
- The bottom stop (27)

3. Re-assembling

Carry out the re-trim operations in the reverse order to the stripping operations.
Check that the central closing operates.

STRIPPING-ASSEMBLING : REAR LEFT DOOR

1. Recommended tools

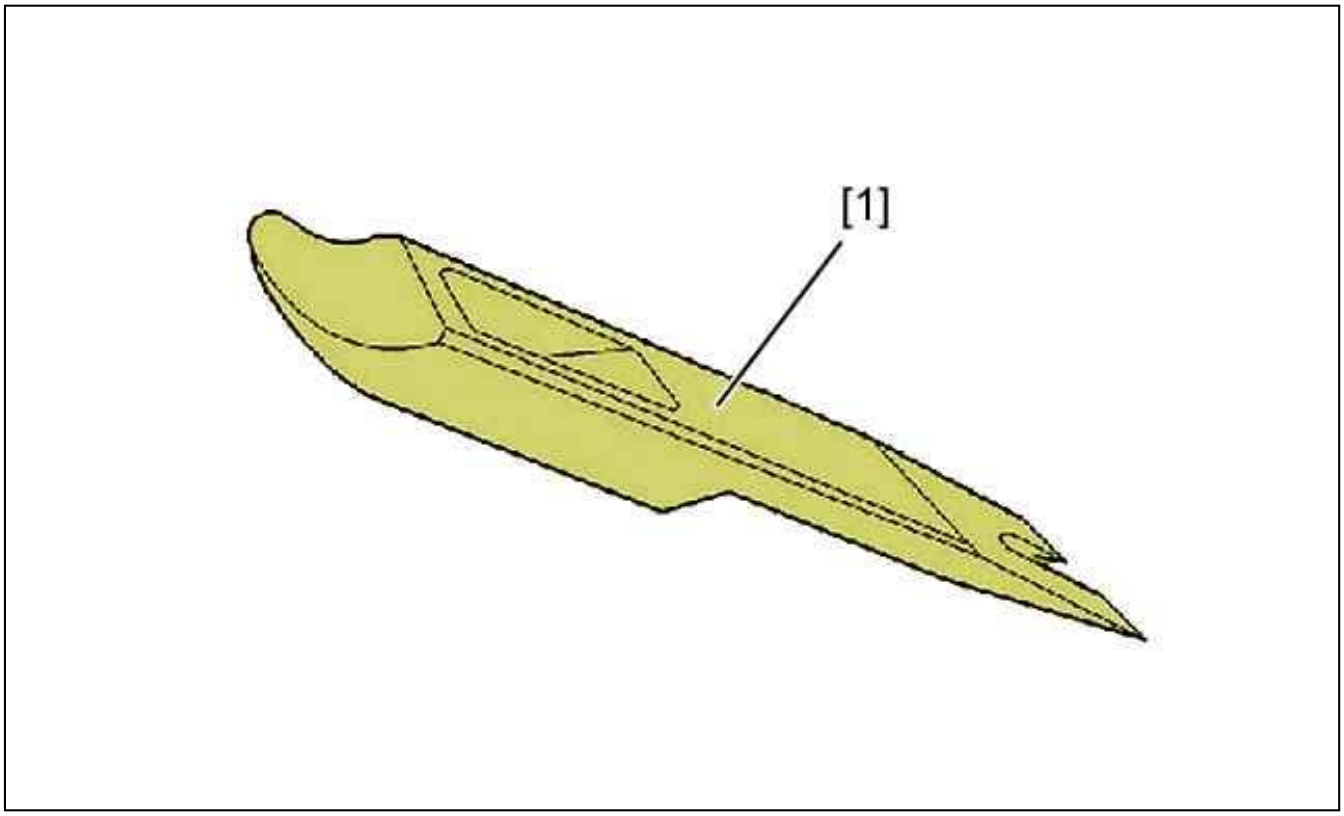

Figure : E5AP2THD

Reference	Designation	Reference
[1]	Unclipping lever	(-).1330-E
	Tool for removing side mouldings	8205-T.E

2. Stripping

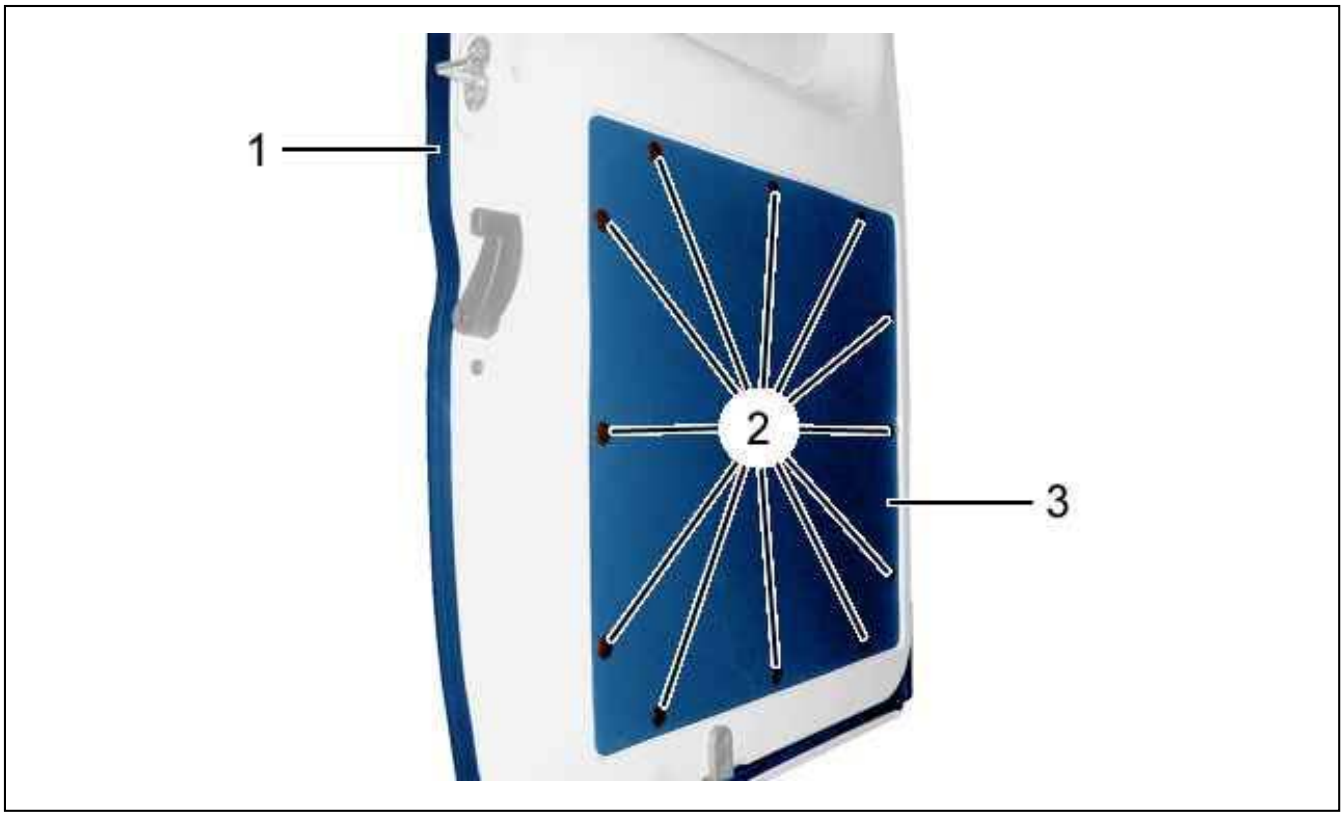

Figure : C5GP0NRD

Remove the seal (1).
Unclip the clips (2) ; Using tool [1].
Remove the trim (3).

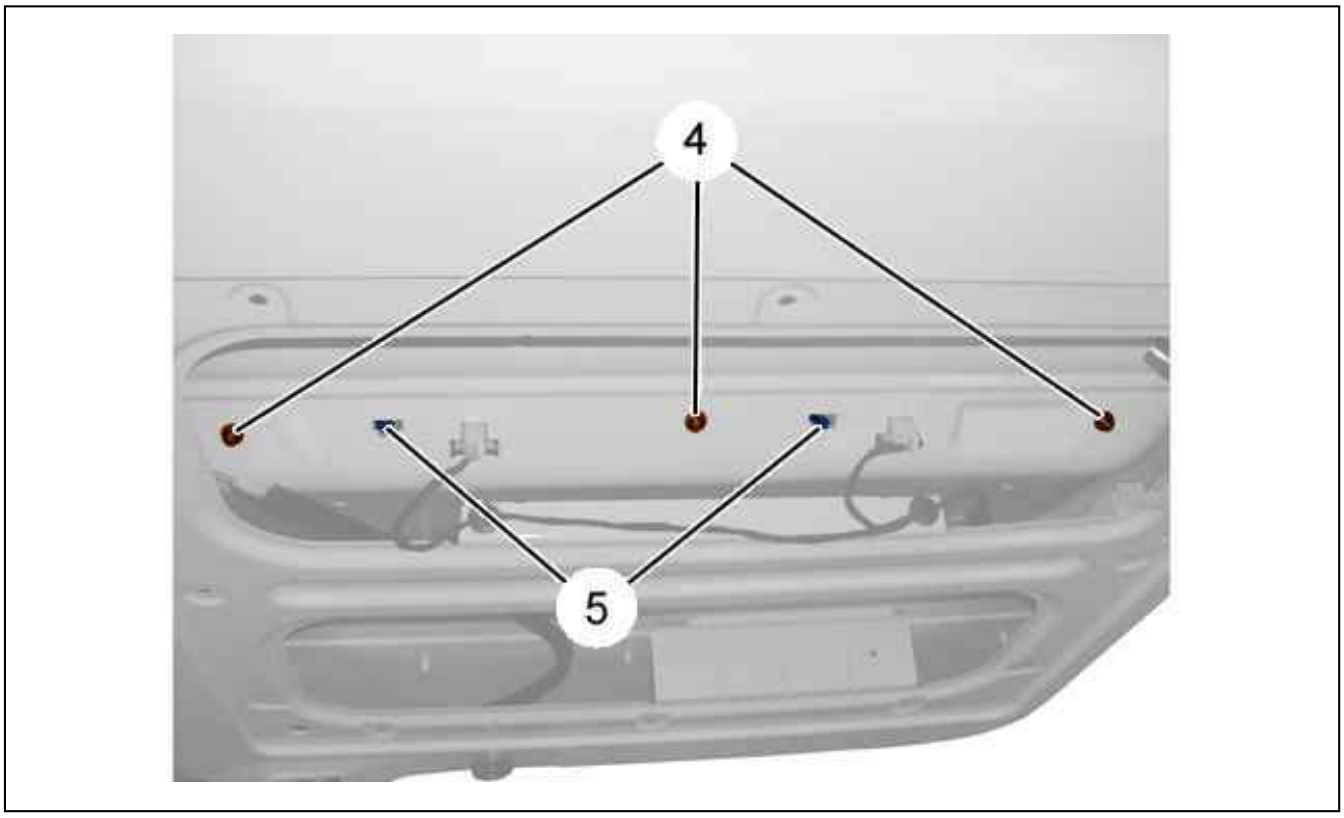

Figure : C4BP1PND

Remove the bolts (4).
Unclip the clips (5).

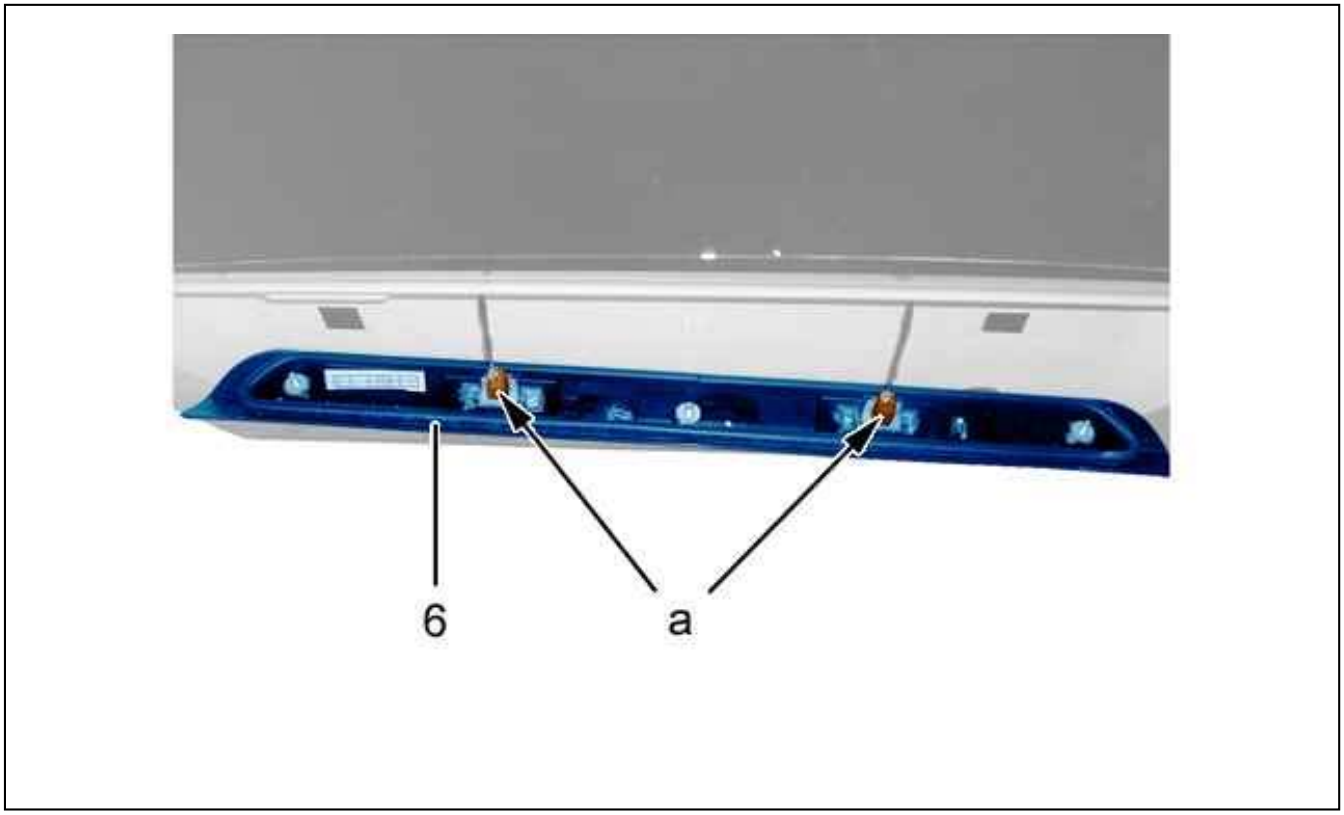

Figure : C4BP1PPD

Disconnect the number plate lamp connectors (at "a").
Remove the number plate embellisher (6).

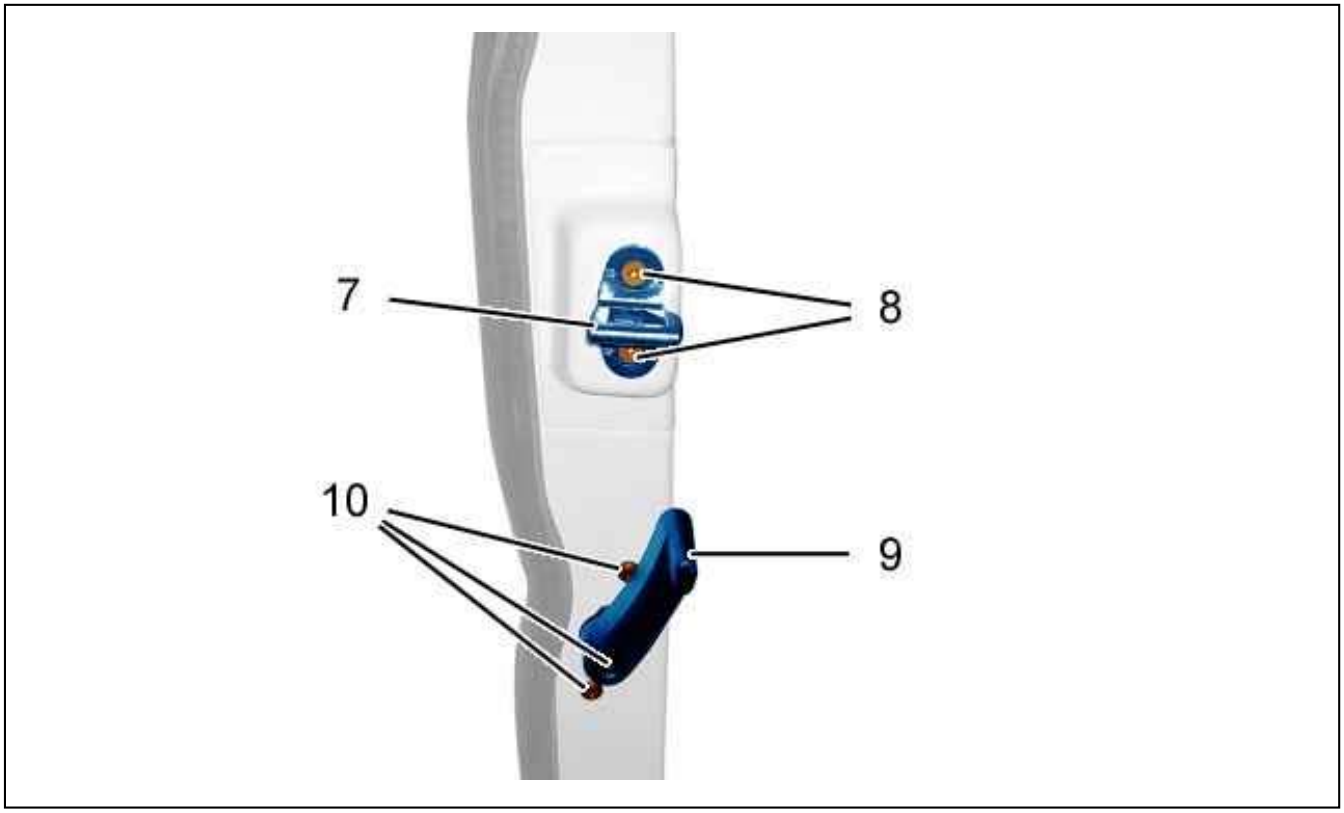

Figure : C4BP1PQD

Remove :

- The bolts (10)
- The handle (9)
- The bolts (8)
- The striker (7)

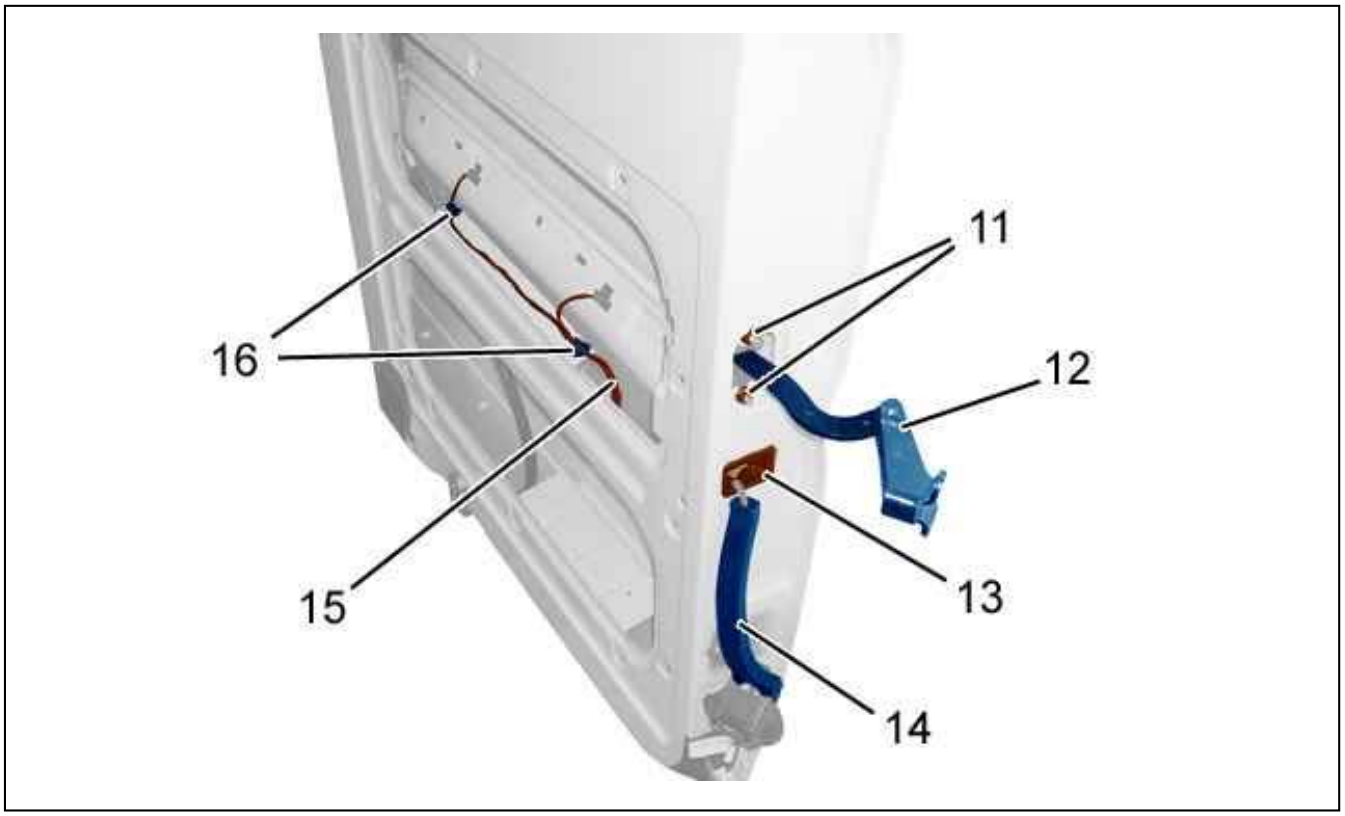

Figure : C4BP1PRD

Remove :

- The bolts (11)
- The door check strap (12)
- The clips (16)
- The protection sleeve (14)
- The electrical harness (15)

Detach the protection (13).

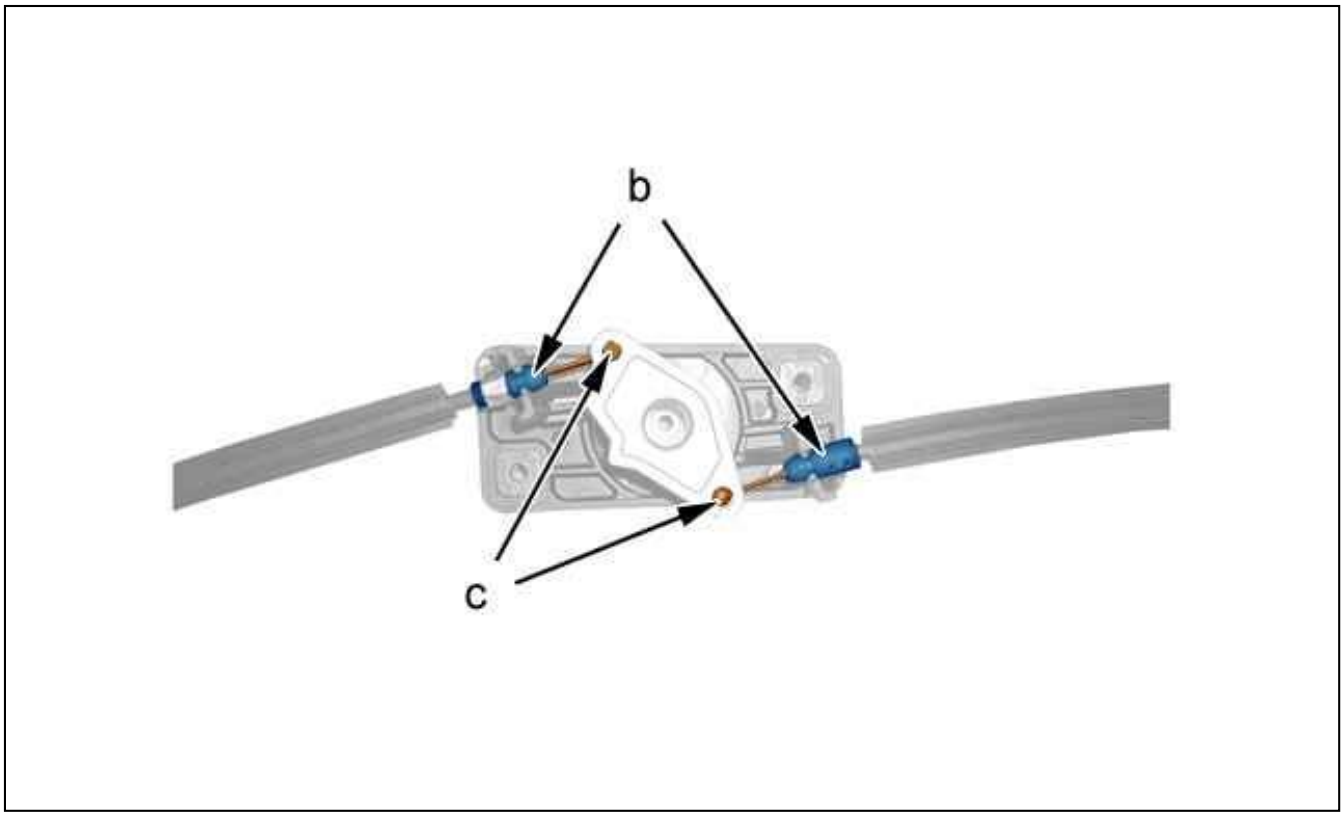

Figure : C5DP06HD

Remove :

- The 2 lock cable guides (at "b")
- The lock cables (at "c")
- The catch

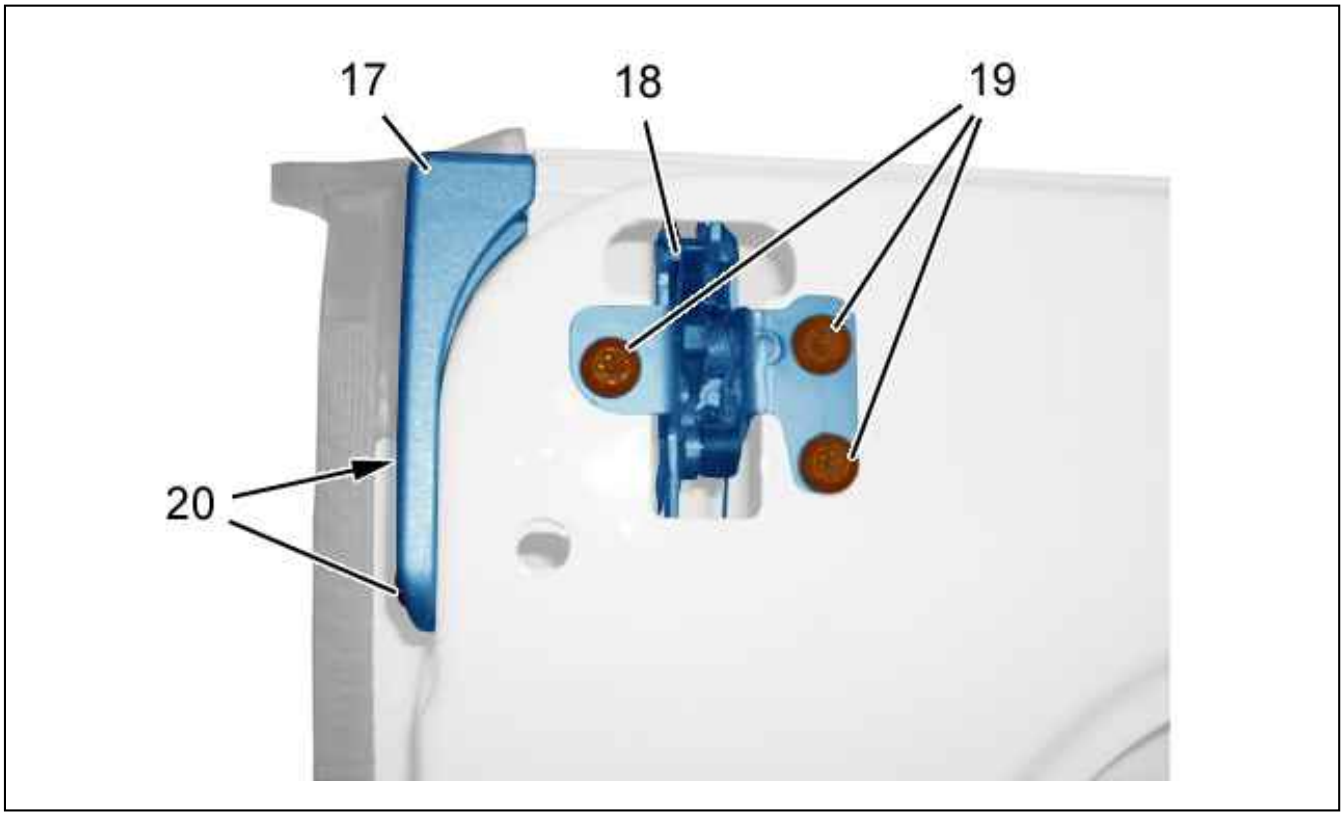

Figure : C4BP1PSD

Remove :

- The bolts (19)
- The top closing mechanism (18)
- The bolts (20)
- The top abutment (17)

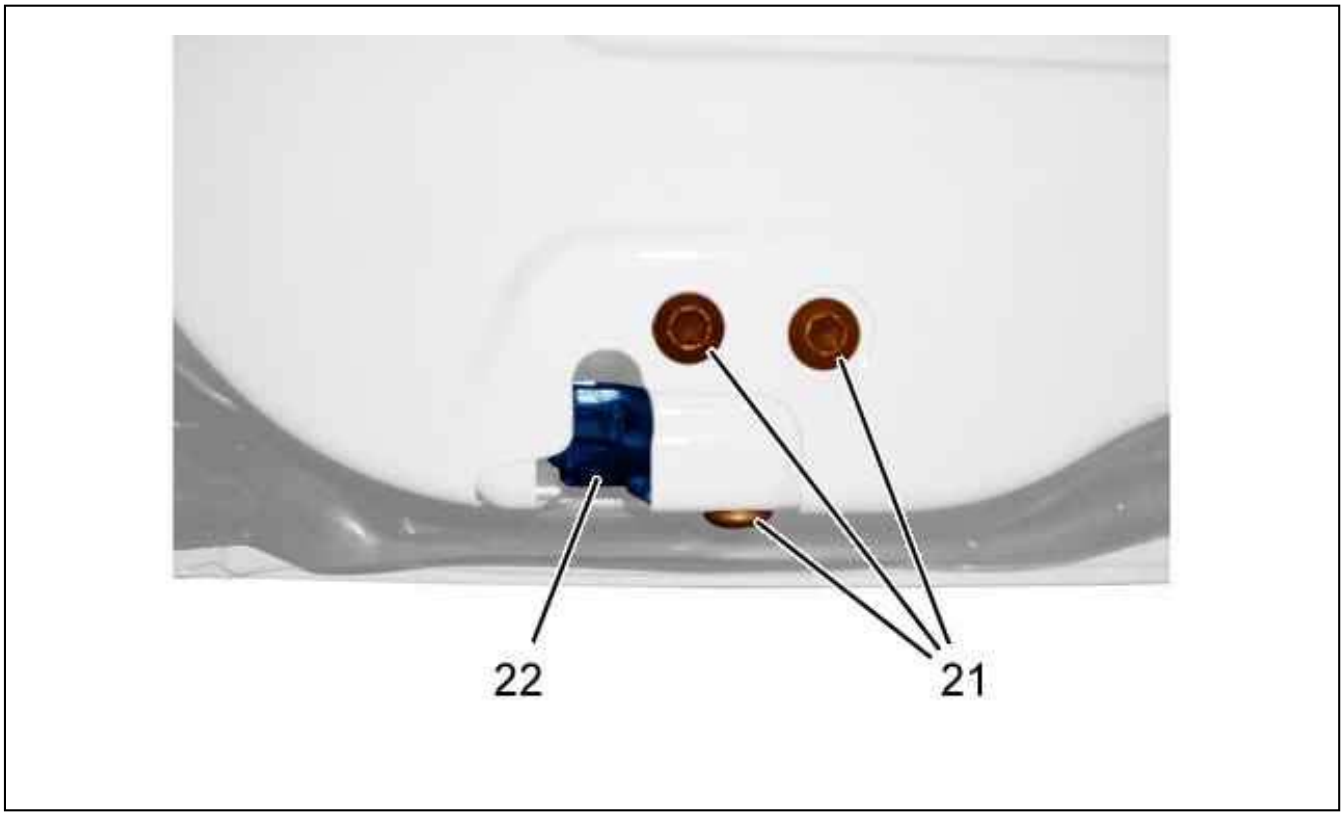

Figure : C4BP1PTD

Remove :

- The bolts (21)
- The bottom closing mechanism (22)

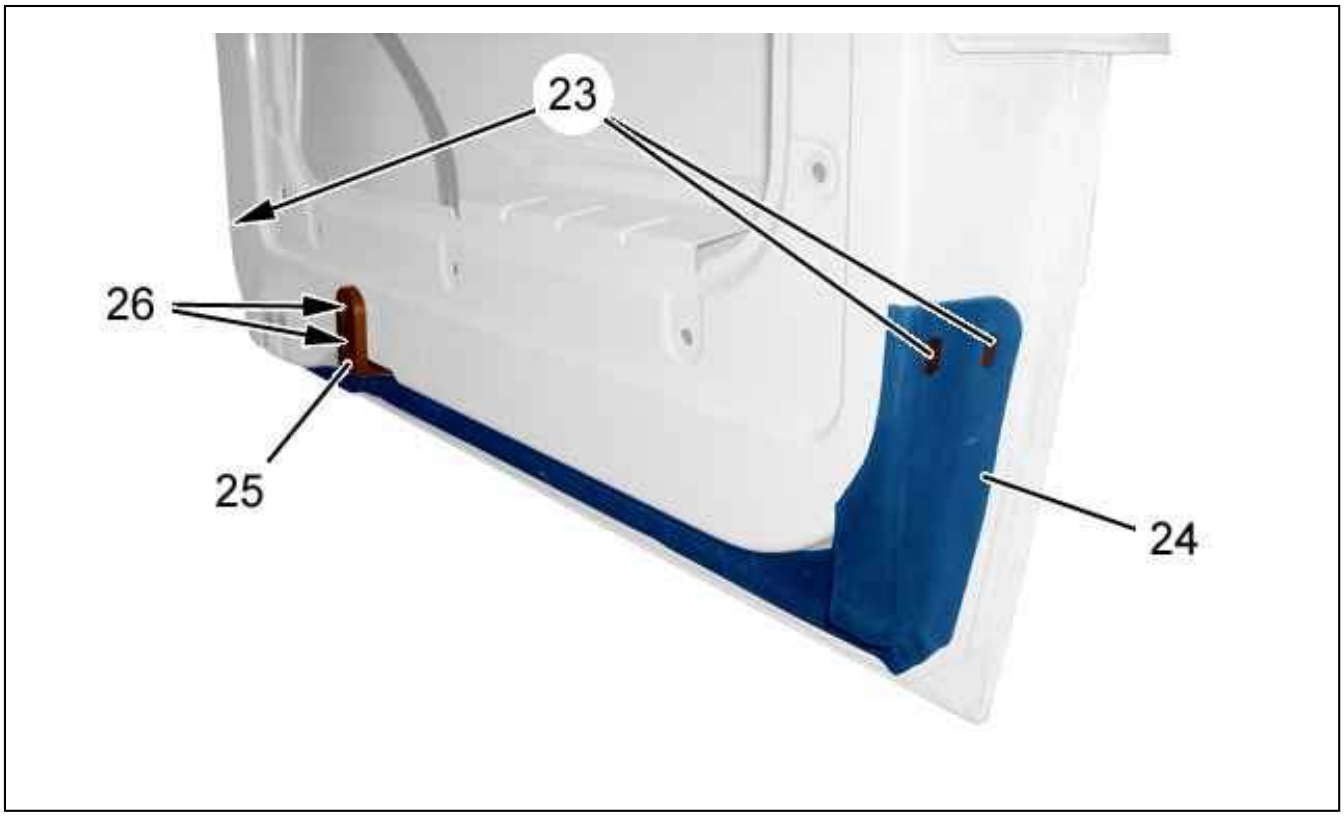

Figure : C4BP1PUD

Remove :

- The mountings (23)
- The door sill seal (24)
- The bolts (26)
- The bottom stop (25)

3. Re-assembling

Carry out the re-trim operations in the reverse order to the stripping operations.
Check the operation.

STRIPPING-ASSEMBLING : EXTERIOR MIRROR

1. Preliminary operation

Remove the exterior rear view mirror (see the relevant operation).

2. Stripping

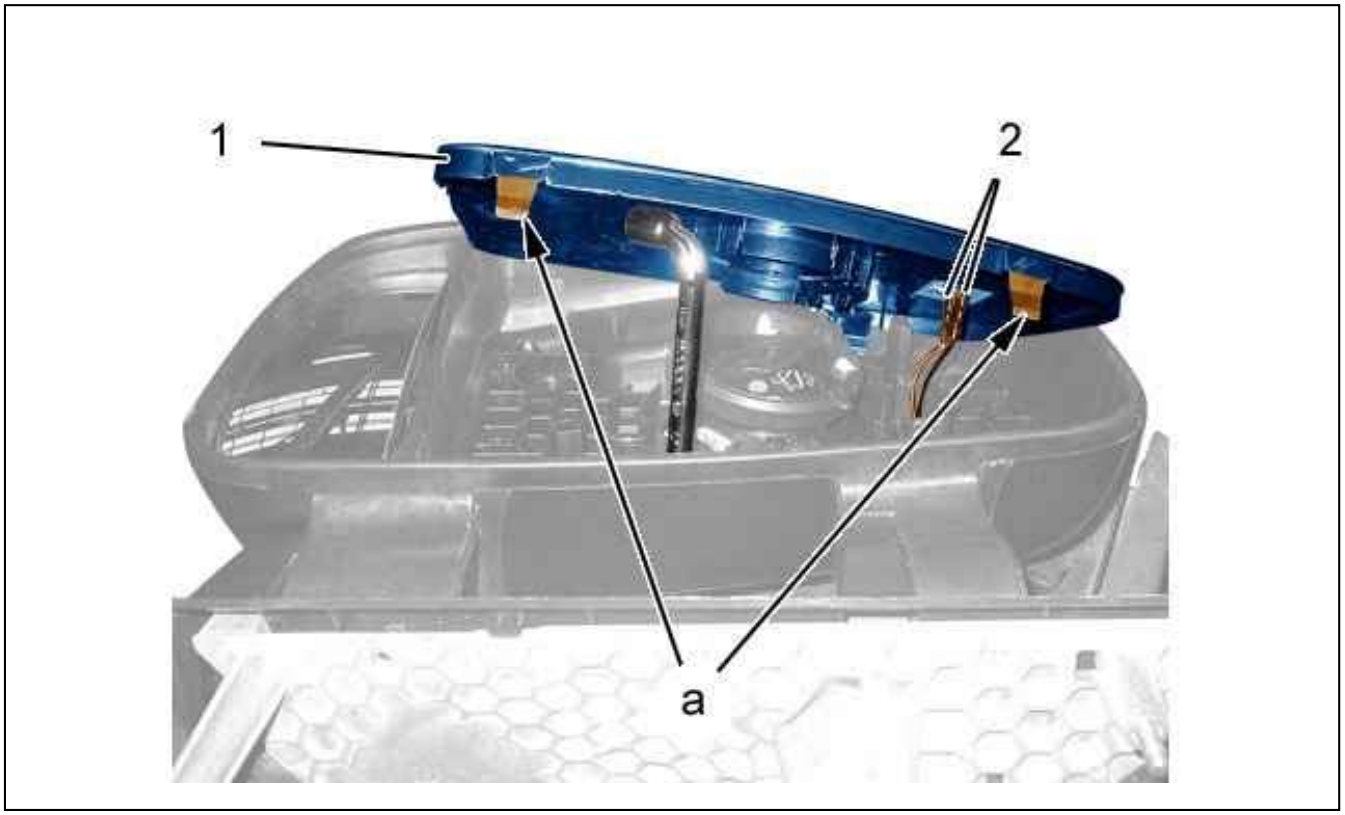

Figure : C4CP1LZD

Unclip the upper mirror (1) (at "a").
Disconnect the connectors (2).

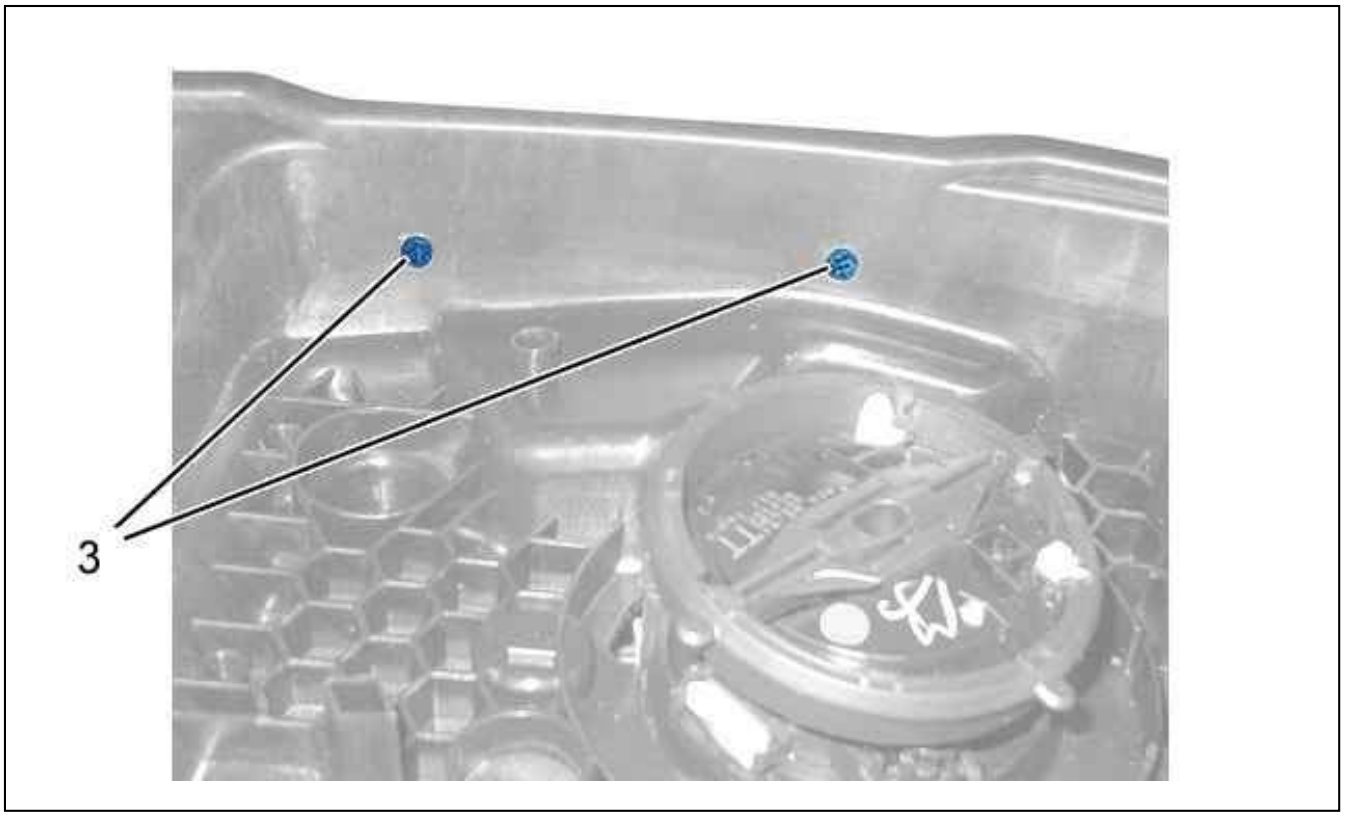

Figure : C4CP1M0D

Remove the side repeater bolts (3).

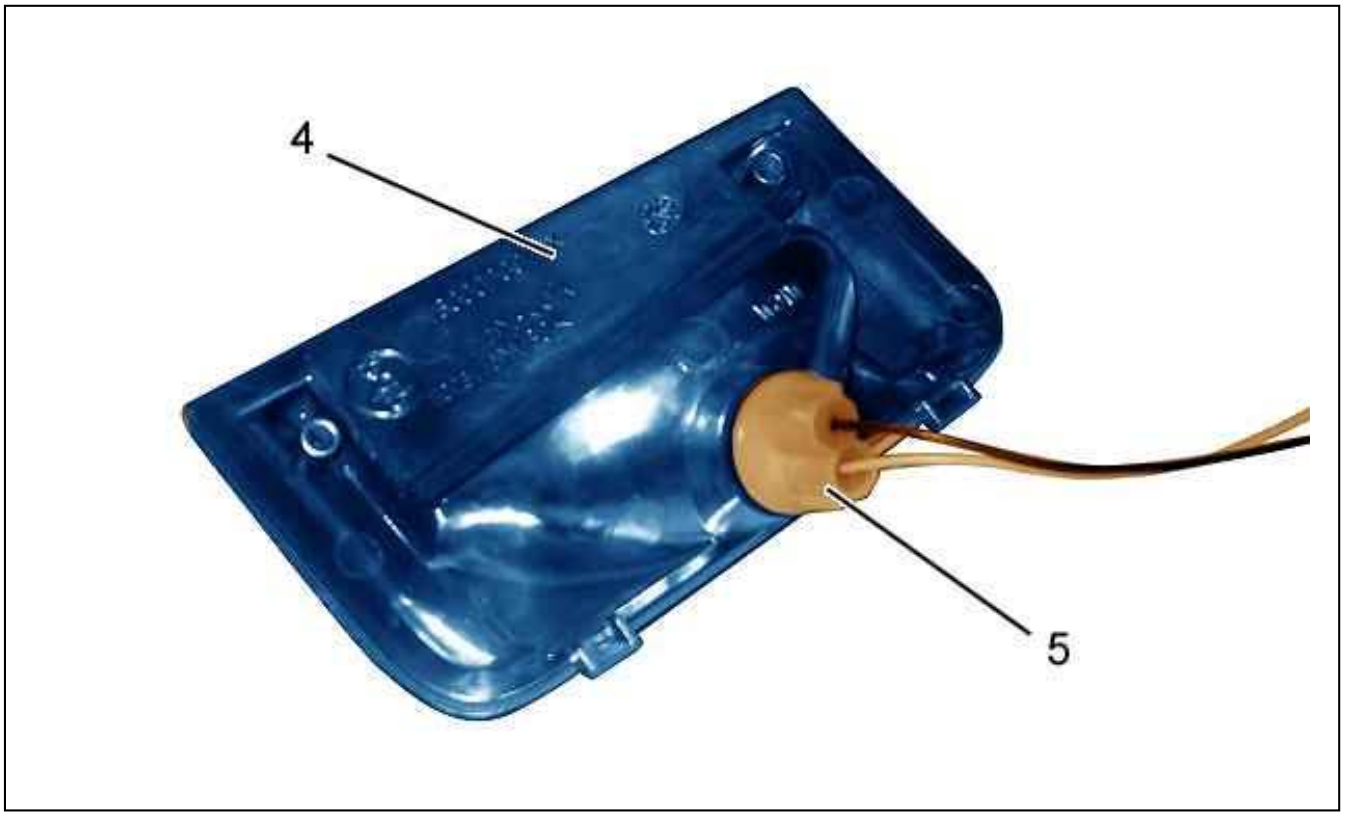

Figure : C4CS12BD

Detach the side repeater (4).
Disconnect the connector (5).

Remove the side repeater (4).

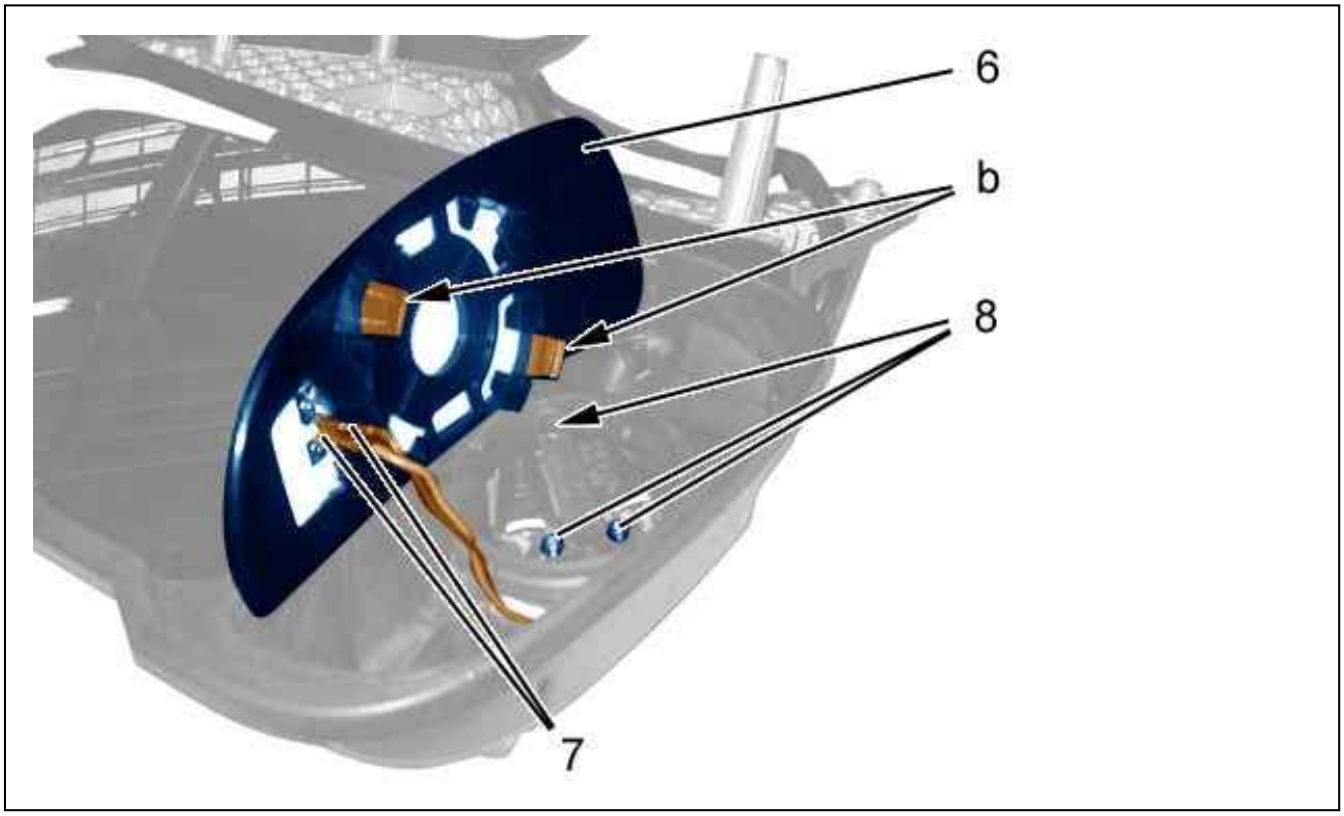

Figure : C4CP1M2D

Unclip the lower mirror (6) (at "b").
Disconnect the connectors (7).
Remove :

- The lower mirror (6)
- The bolts (8)

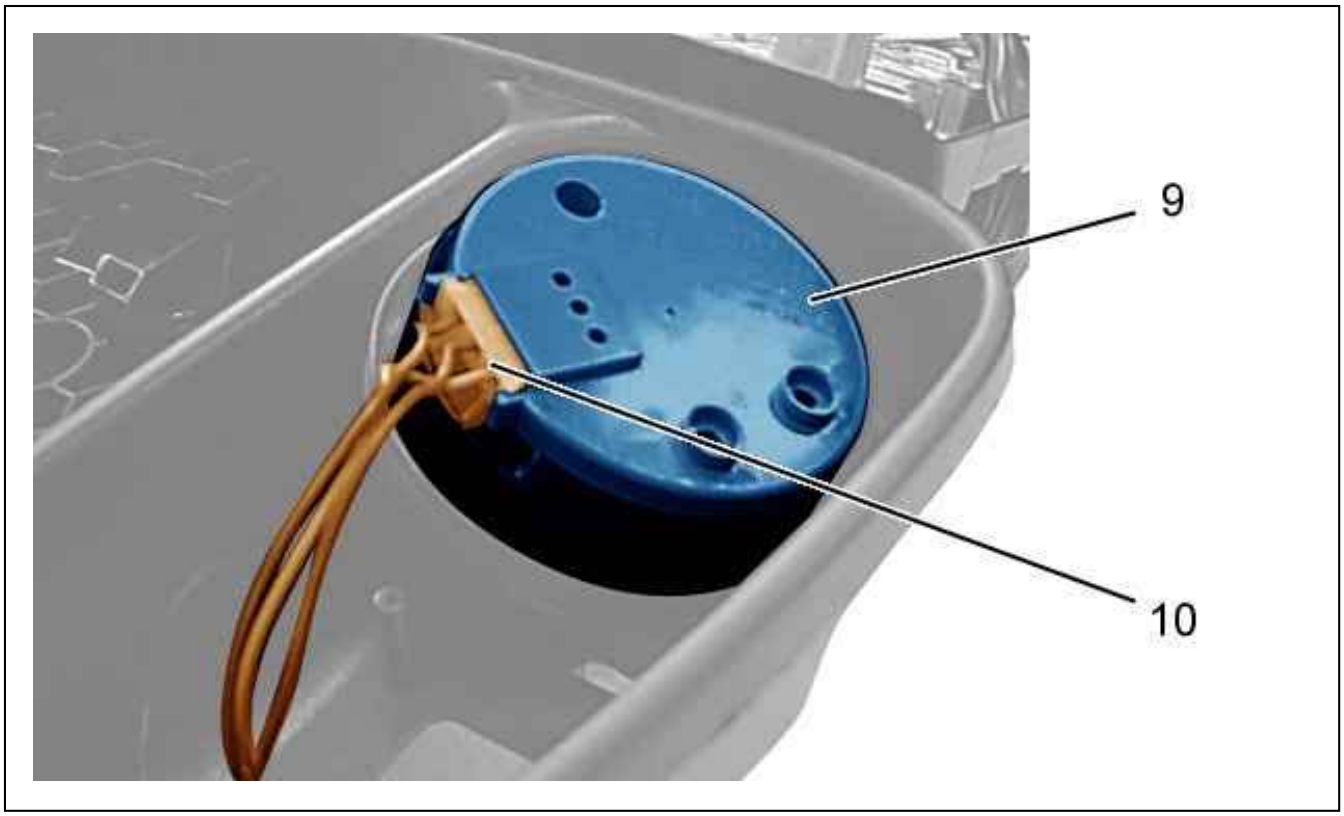

Figure : C4CP1M3D

Detach the lower mirror motor (9).
Disconnect the connector (10).
Remove the lower mirror motor (9).

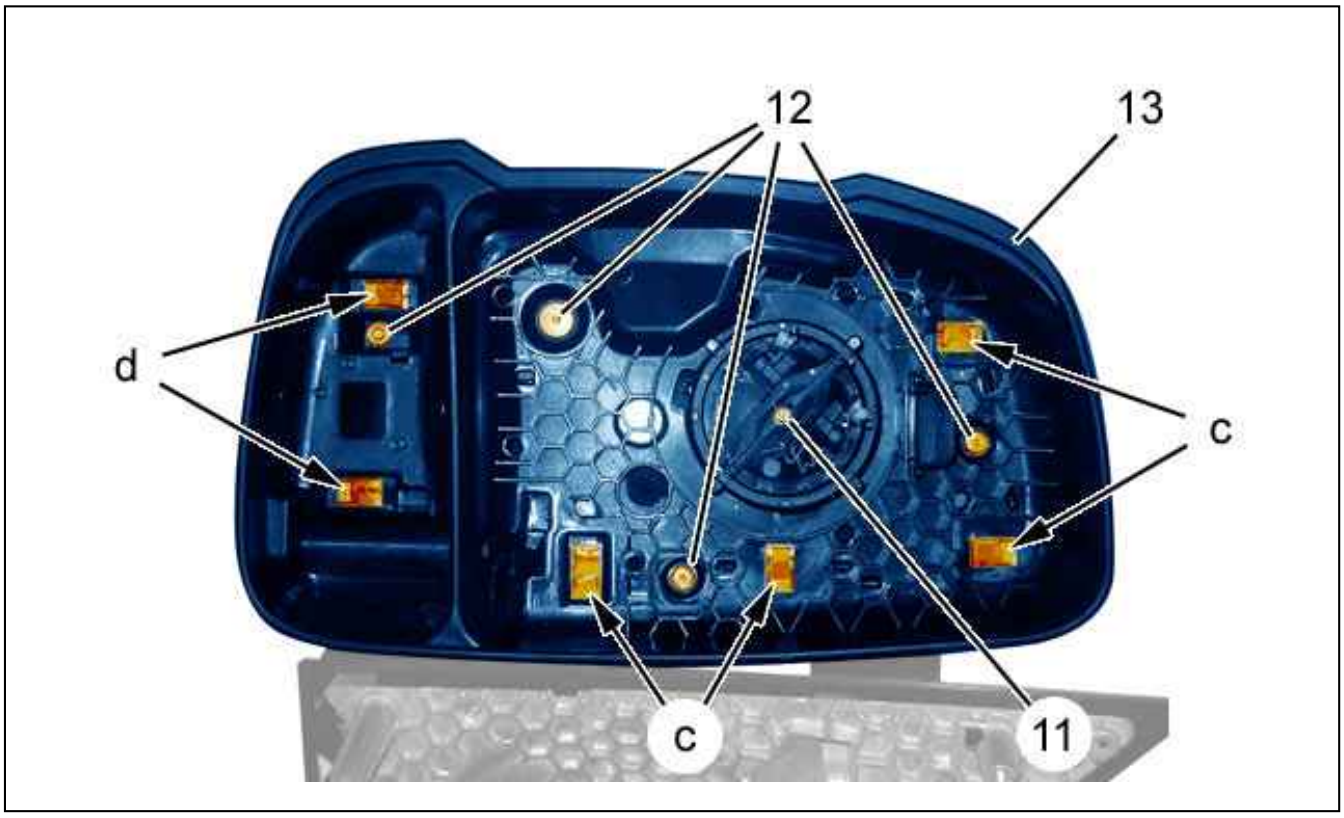

Figure : C4CP1M4D

Remove :

- The (11) bolt
- The bolts (12)

Unclip the exterior shell (13) (at "c" and "d").

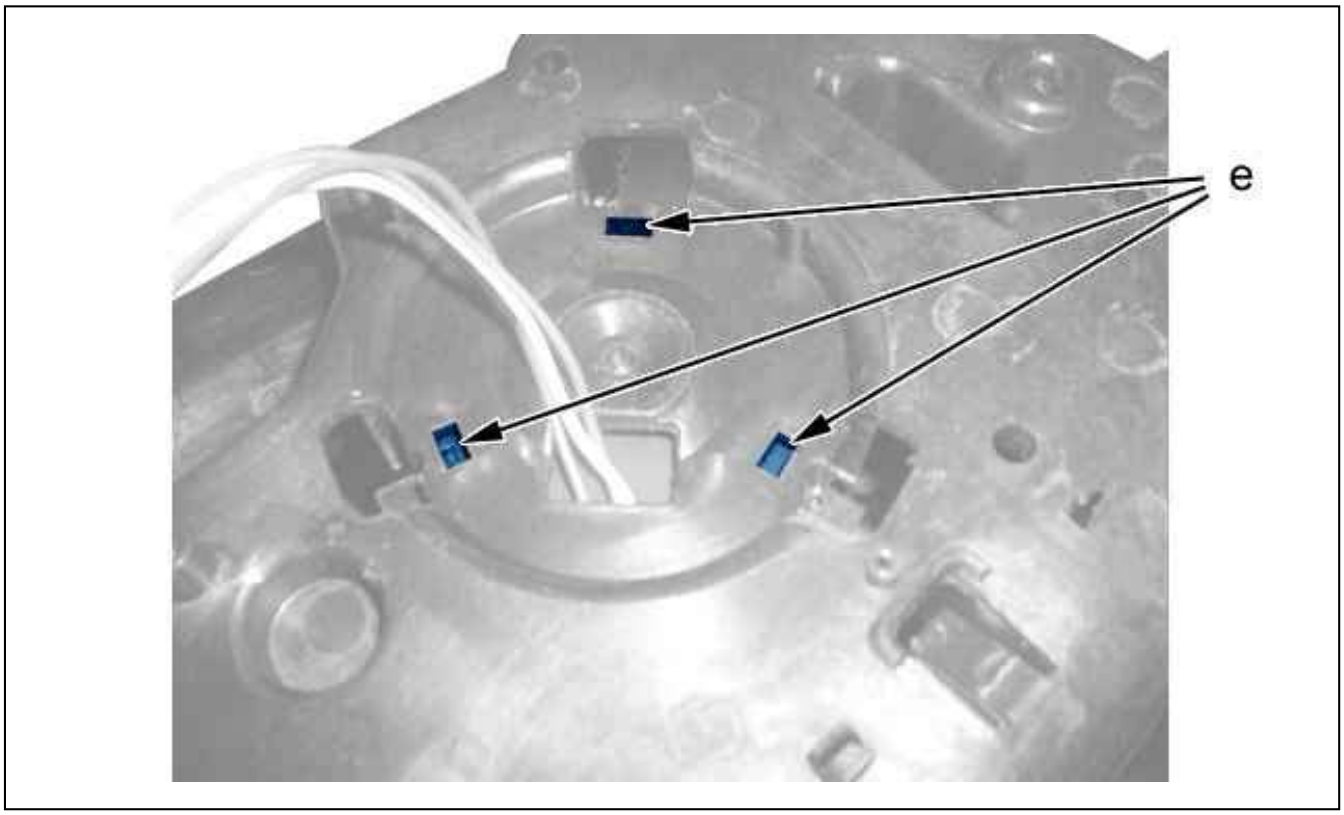

Figure : C4CP1M5D

Detach the upper mirror motor (at "e").

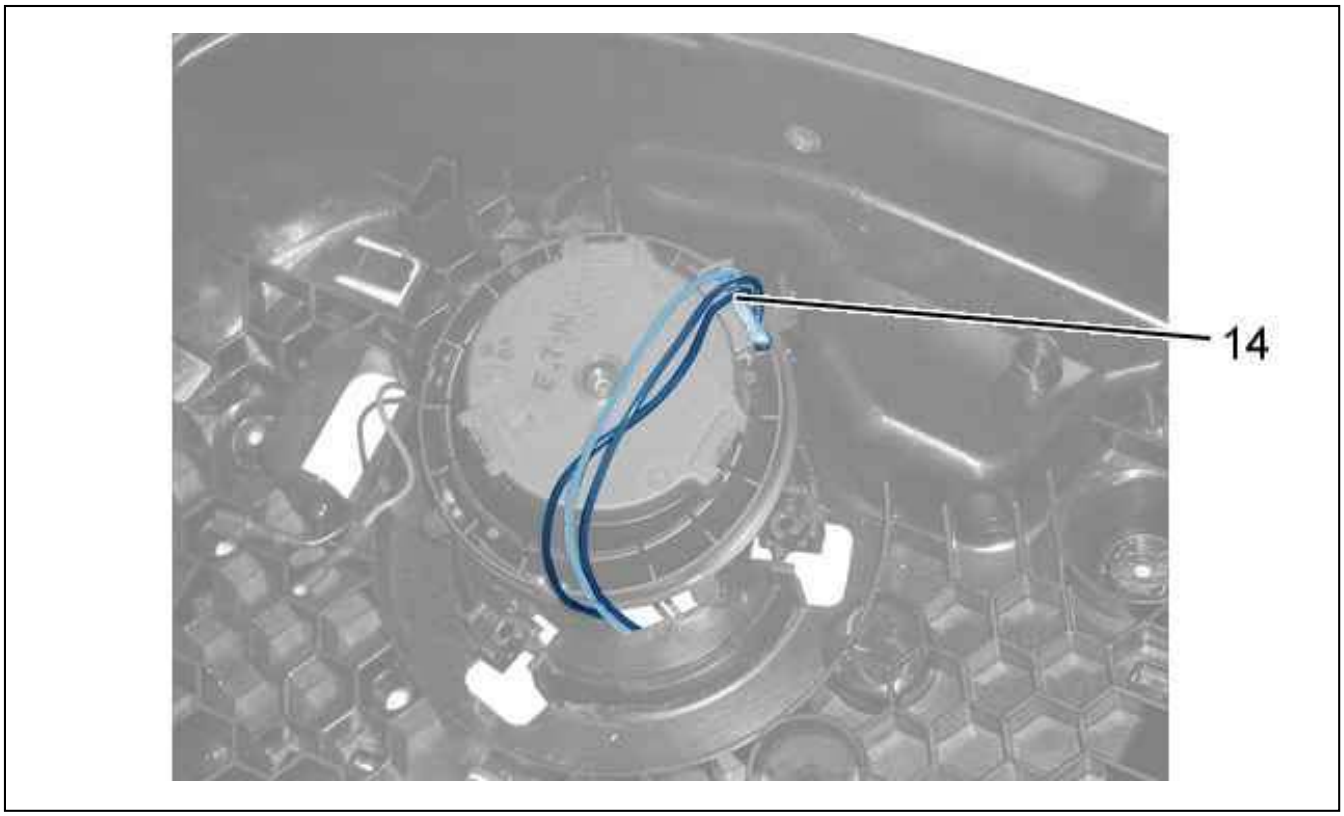

Figure : C4CP1M6D

Disconnect the connector (14).
Remove the upper mirror motor.

3. Re-assembling

Carry out the re-trim operations in the reverse order to the stripping operations.
Check the electric operation.

STRIPPING-ASSEMBLING : FRONT DOOR

1. Recommended tools

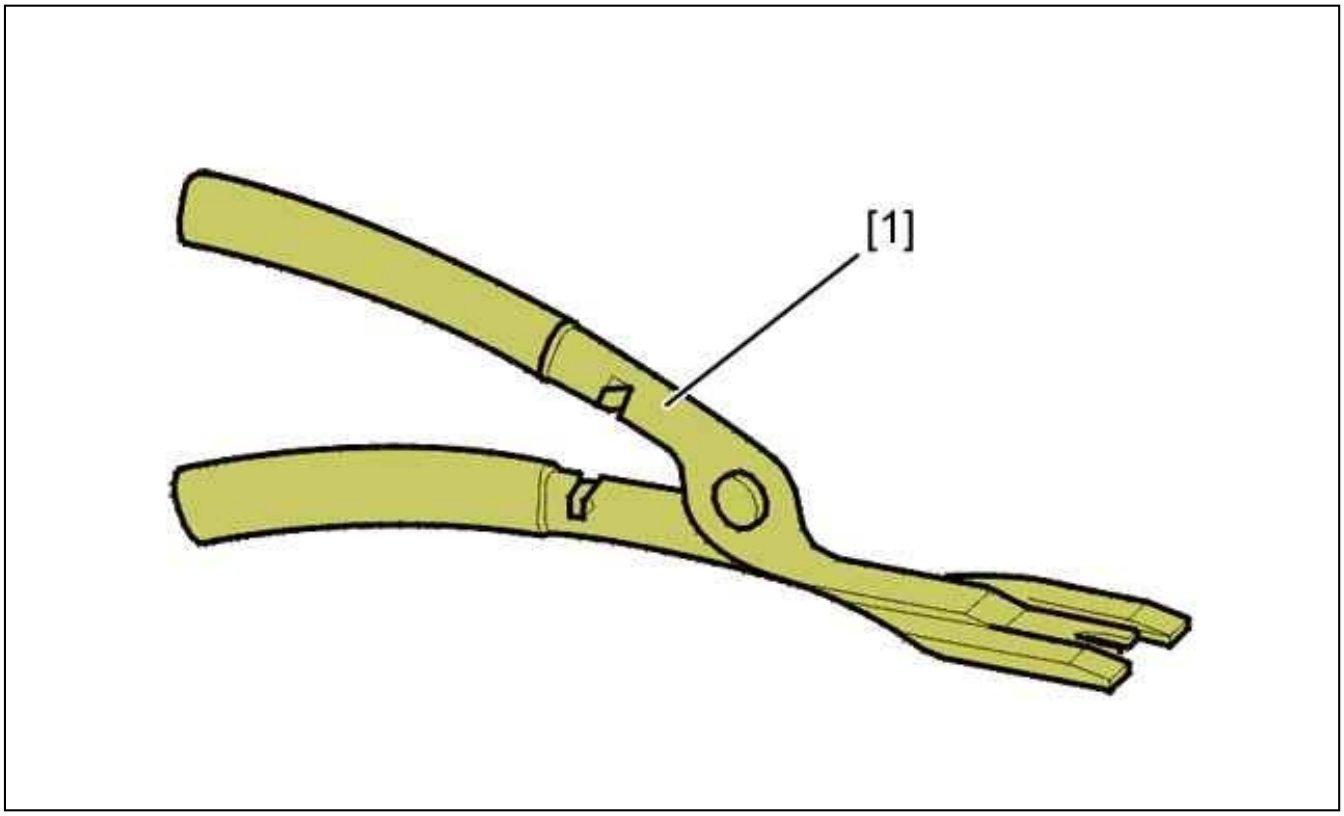

Figure : E5AP2TJD

[1] Trim pliers (-).1311.

2. Stripping

Disconnect the battery.



Figure : C5GP0NSD

Remove :

- The bolts (1)
- The glove box (2)



Figure : C5GP0NTD

Unclip the upper cover (3) (following "a").

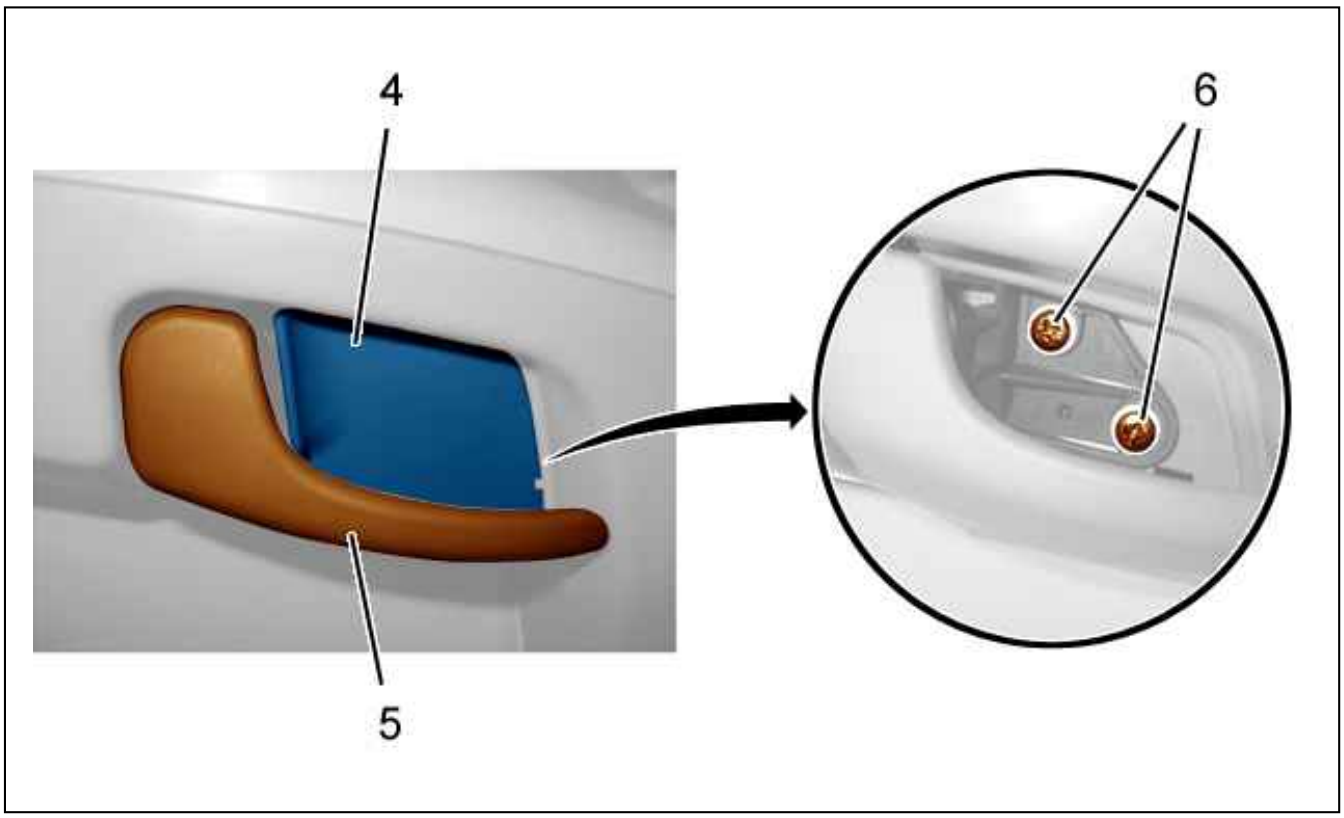

Figure : C5GP0NUD

Unclip the door opening control handle (5) finisher (4).
Remove :

- The bezel (4)
- The bolts (6)

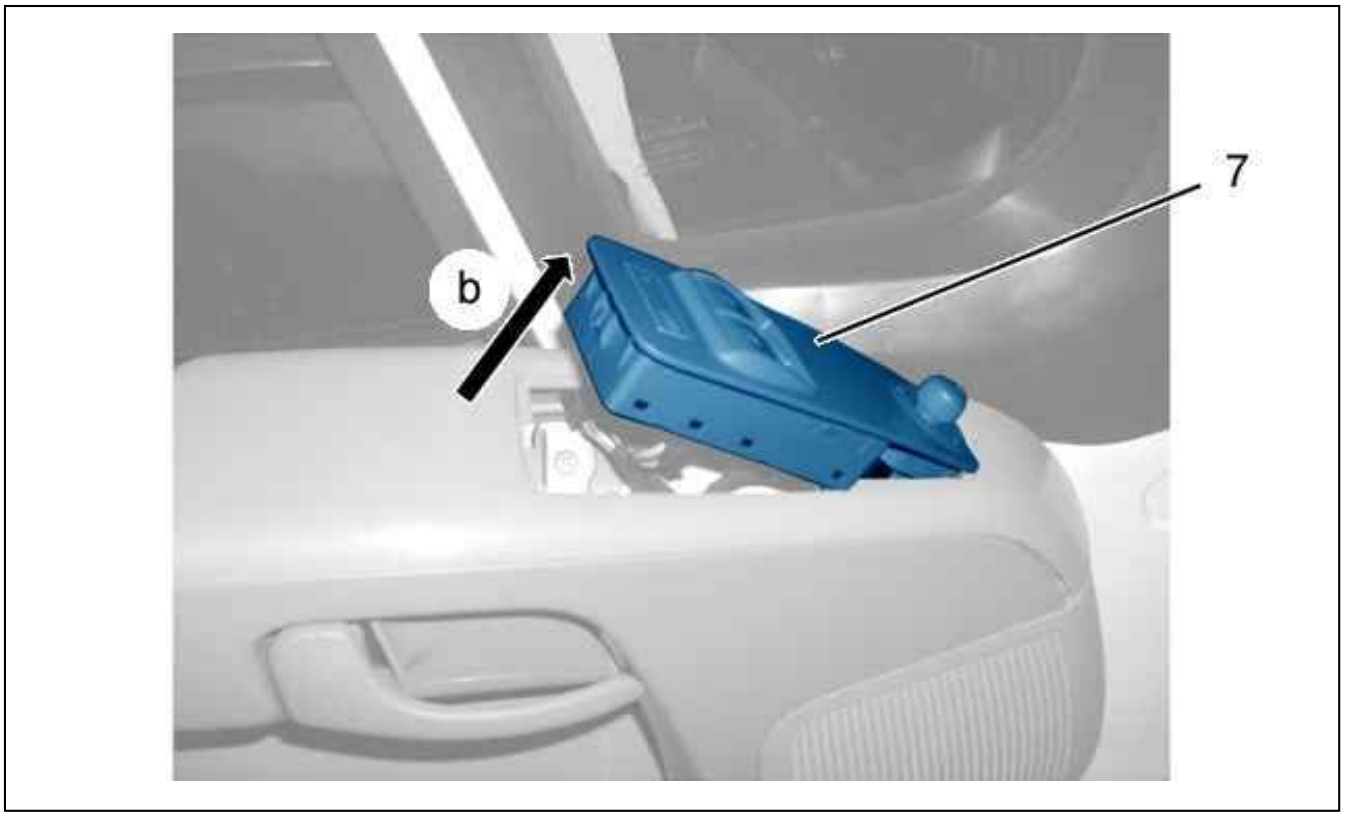

Figure : C5GP0NVD

Detach the electric window control (7) (following "b").

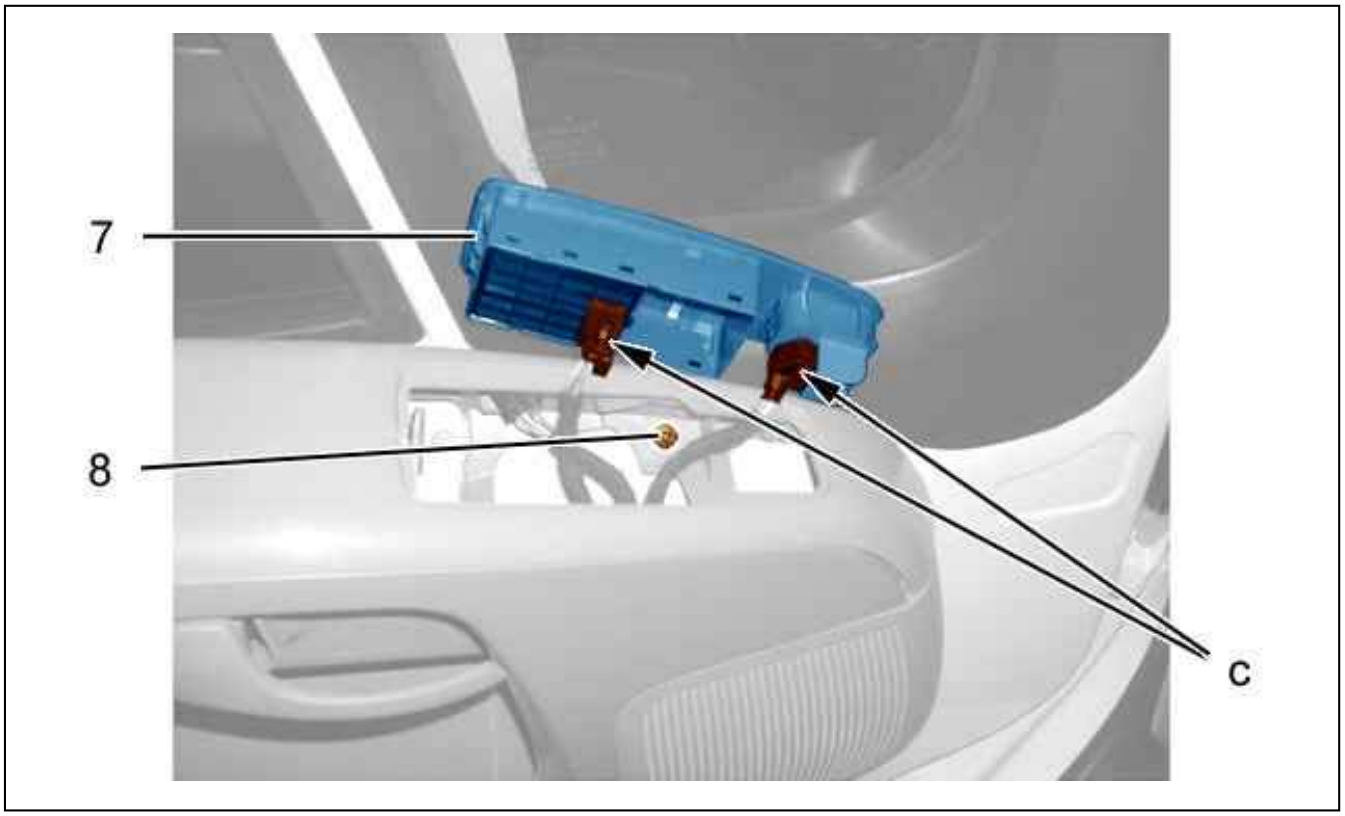

Figure : C5GP0NWD

Disconnect the 2 connectors (at "c").
Remove :

- The electric window control (7)
- The (8) bolt



Figure : C5GP0NXD

Unclip and remove the speaker grille (9).

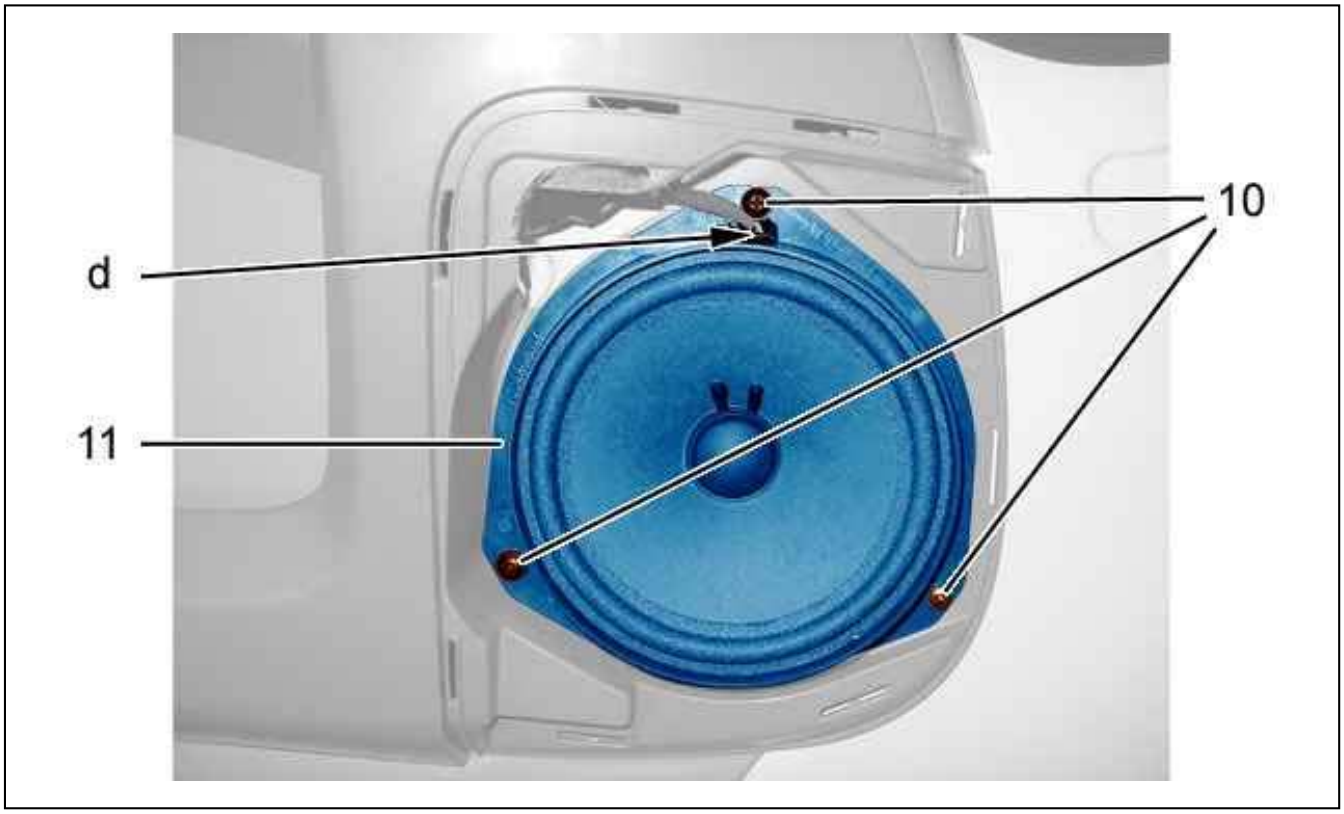

Figure : C5GP0NYD

Remove the bolts (10).
Detach the speaker (11).
Disconnect the connector (at "d").
Remove the speaker (11).

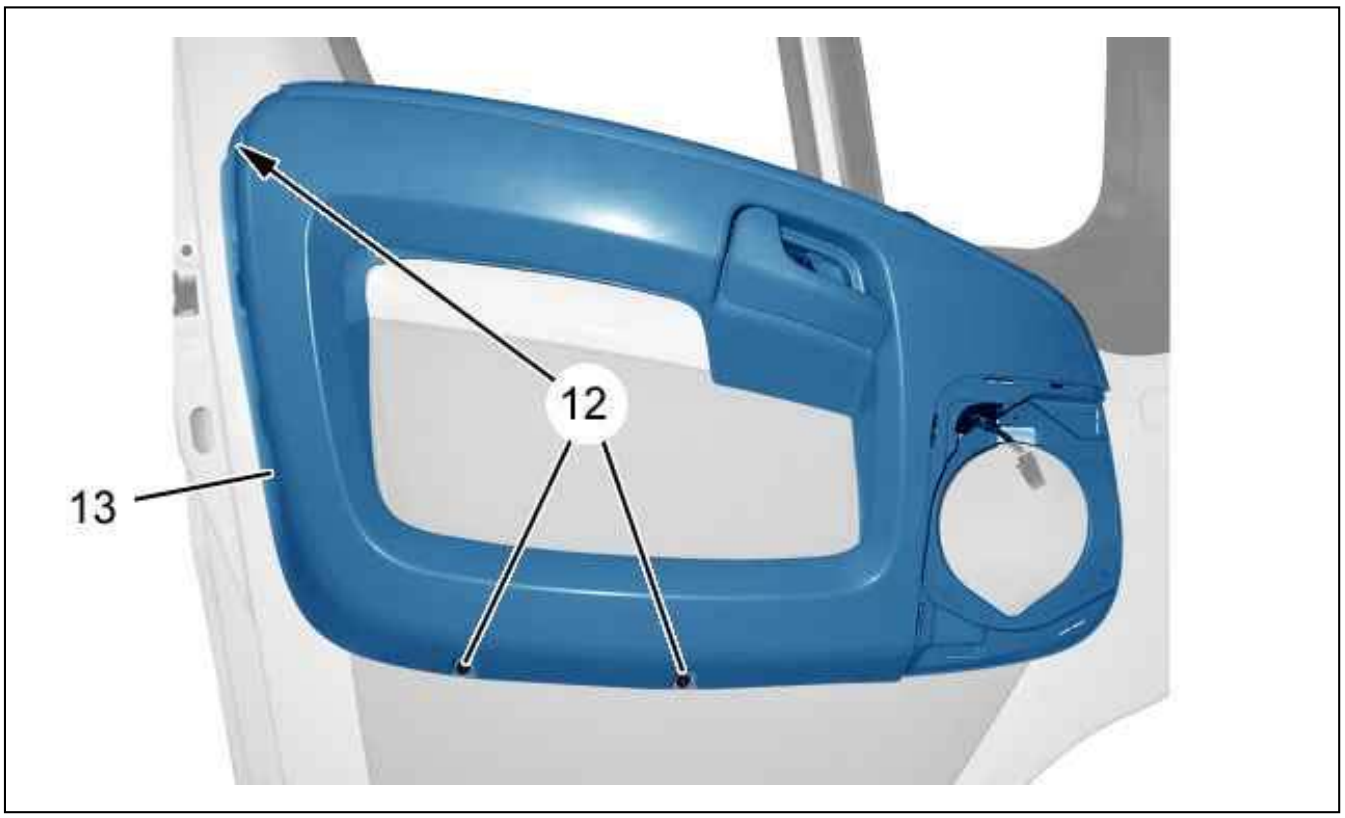

Figure : C5GP0NZD

Remove the armrest (13) bolts (12).
Partially detach the armrest (13).

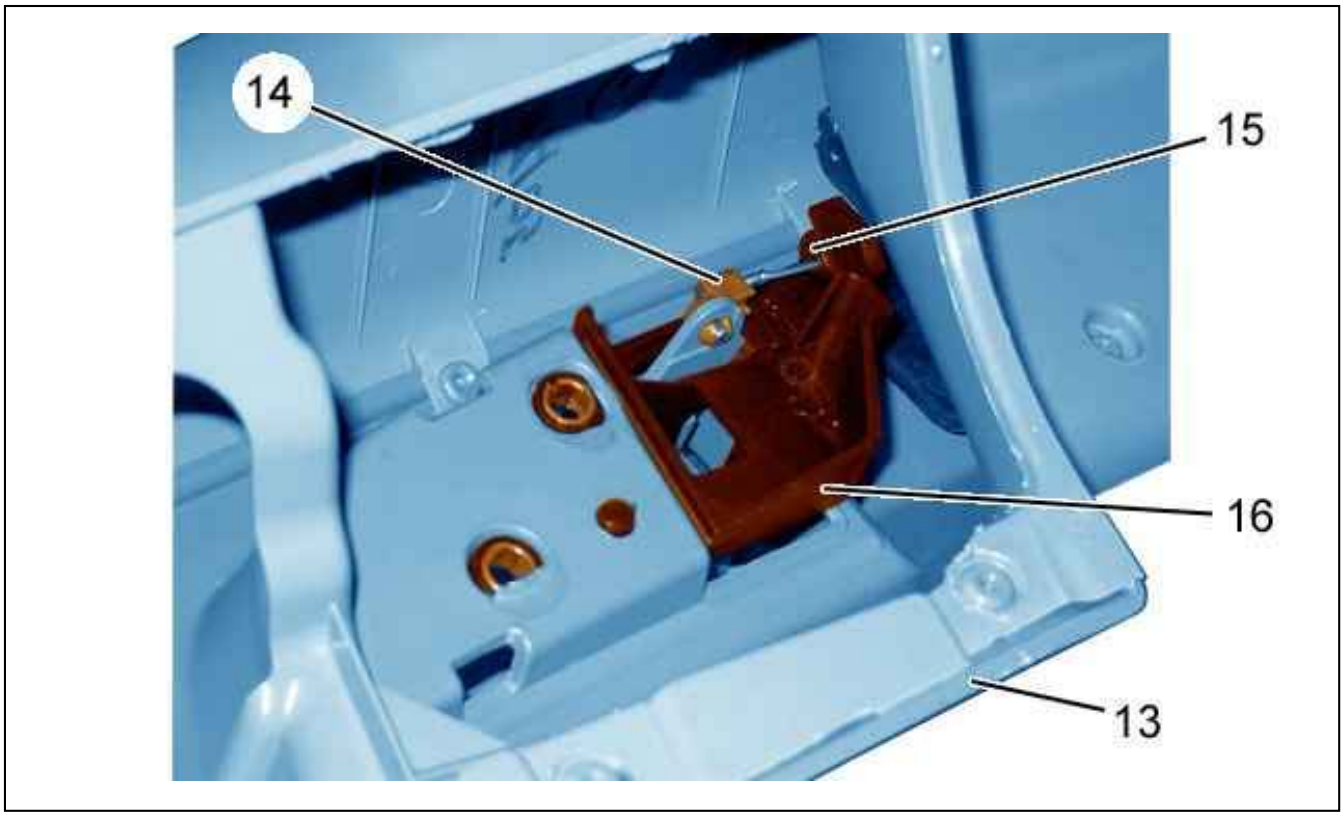

Figure : C5GP0P0D

Detach :

- The clip (14)
- The cable end stop (15)
- The door opening control handle base (16)

Remove the armrest (13).

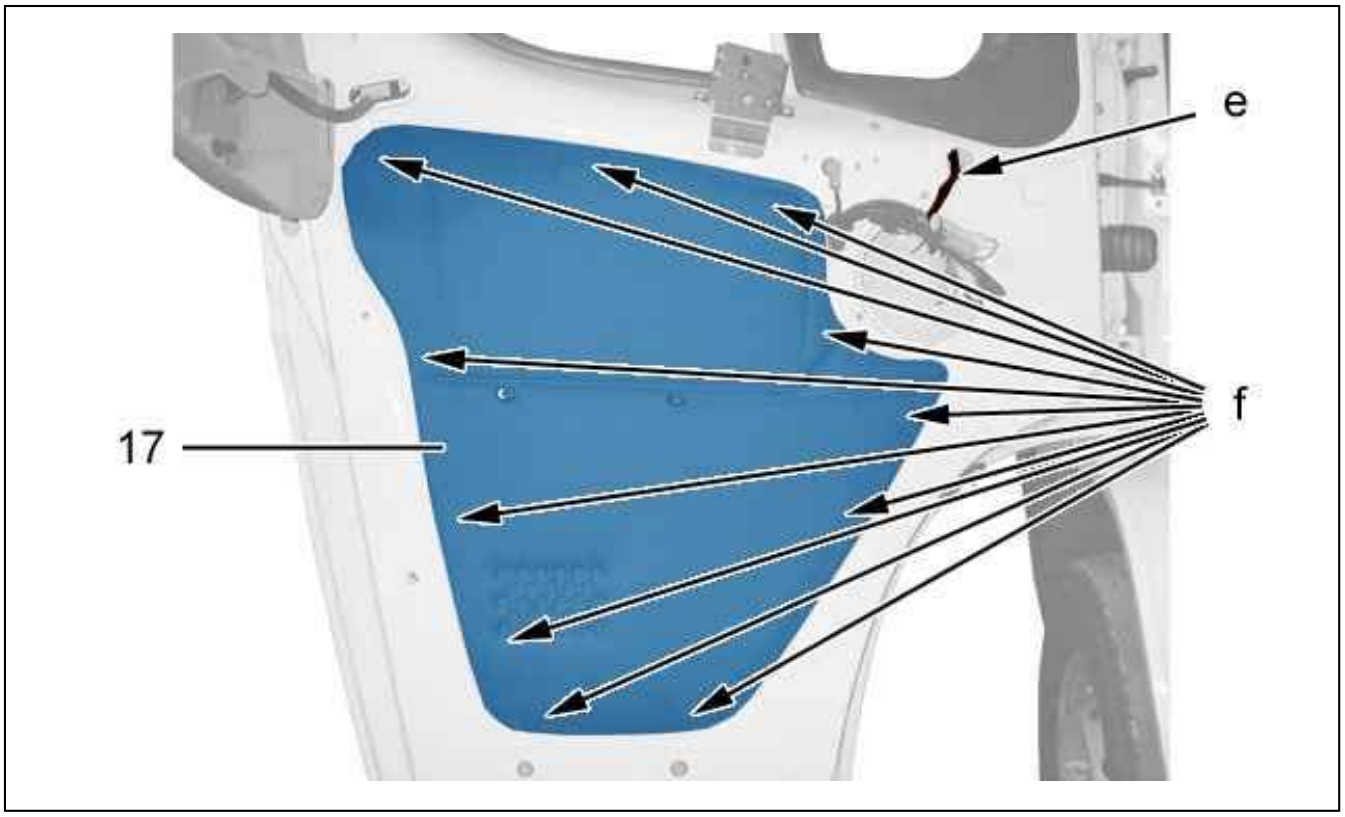

Figure : C5GP0P1D

Unclip the clips (at "f") ; Using tool [1].
Remove the panel with liner (17).
Disconnect the exterior mirror connector (at "e").
Remove the exterior rear view mirror (see the relevant operation).

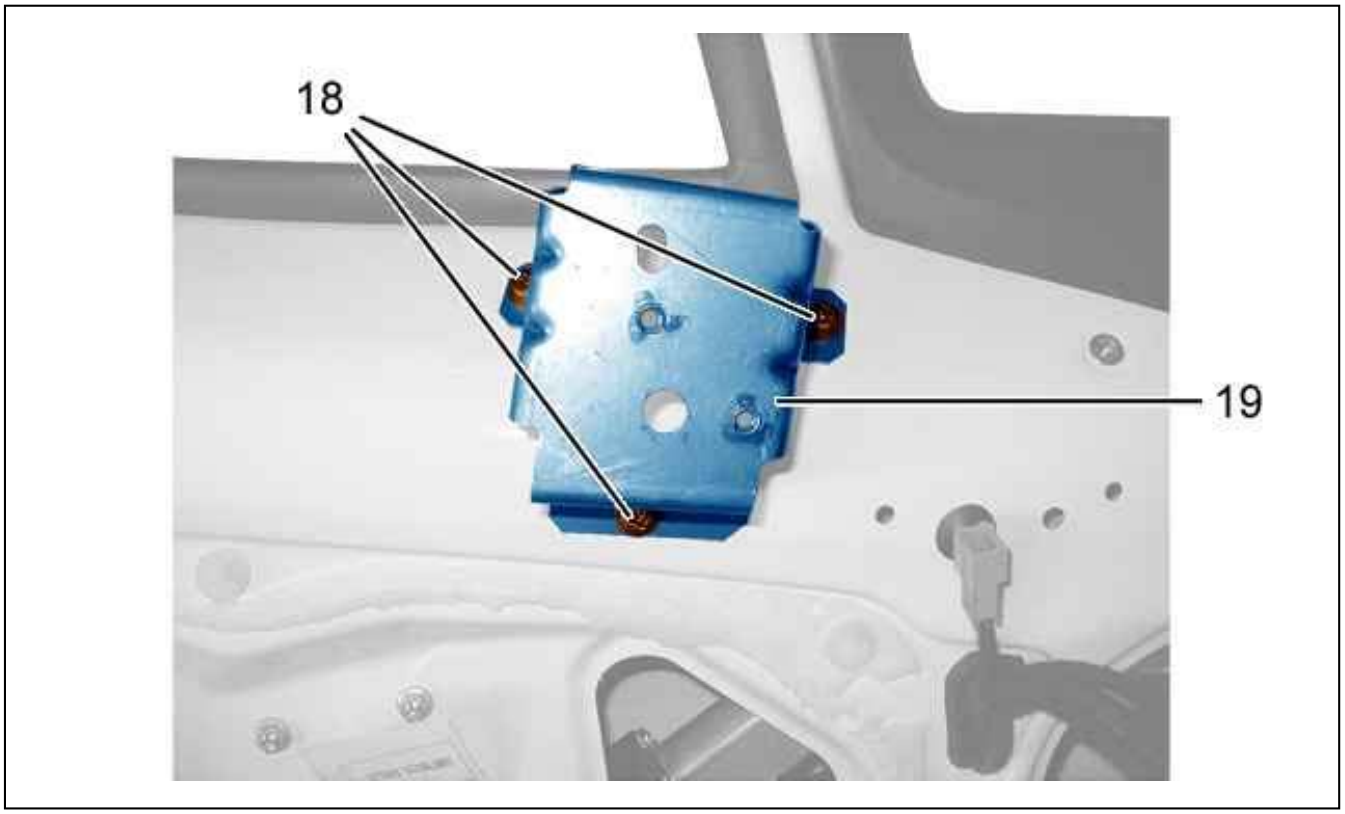

Figure : C4CP1RUD

Remove :

- The bolts (18)
- The door opening control handle support (19)

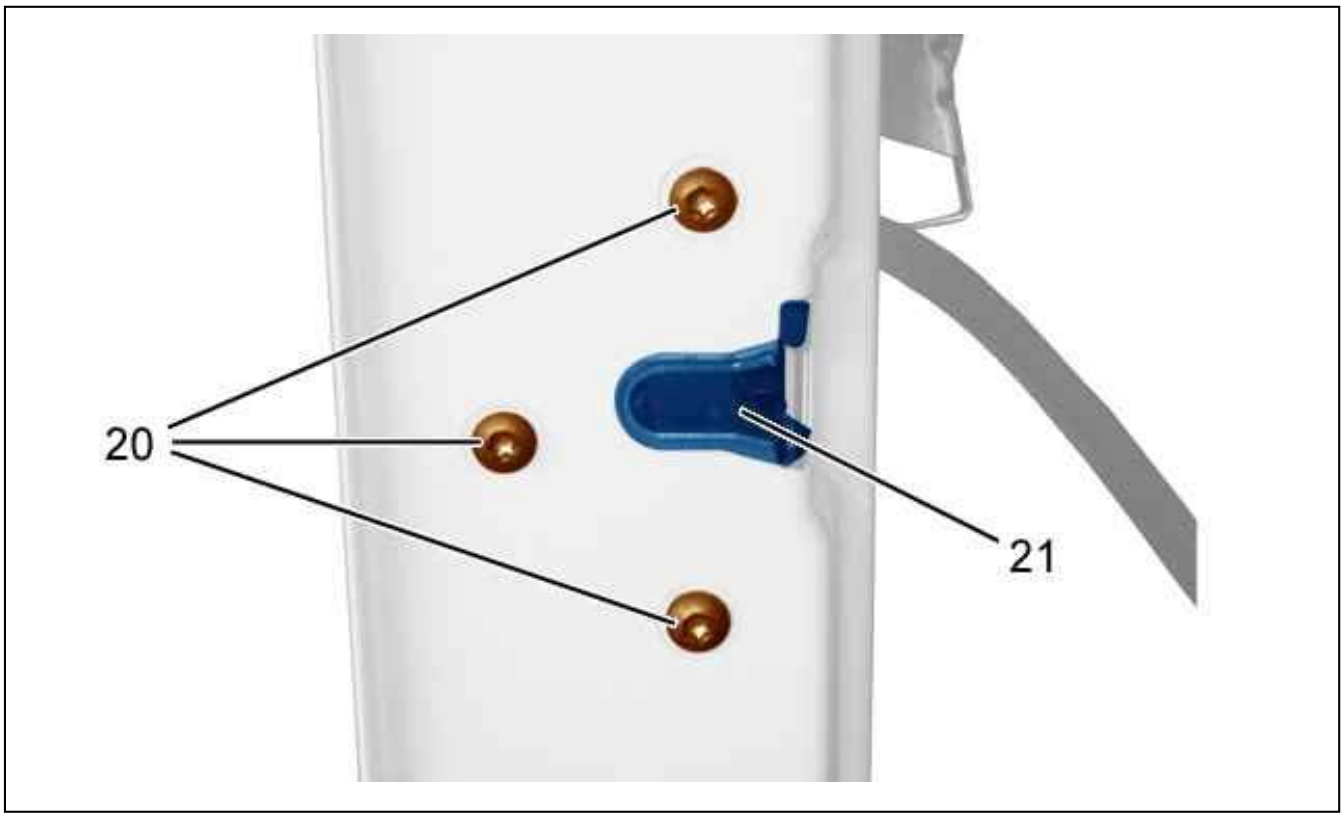

Figure : C4CP1RVD

Remove the bolts (20).

N.B. : Remove the window guide bolt in order to be able to extract the closing mechanism.

Partially detach the lock (21).

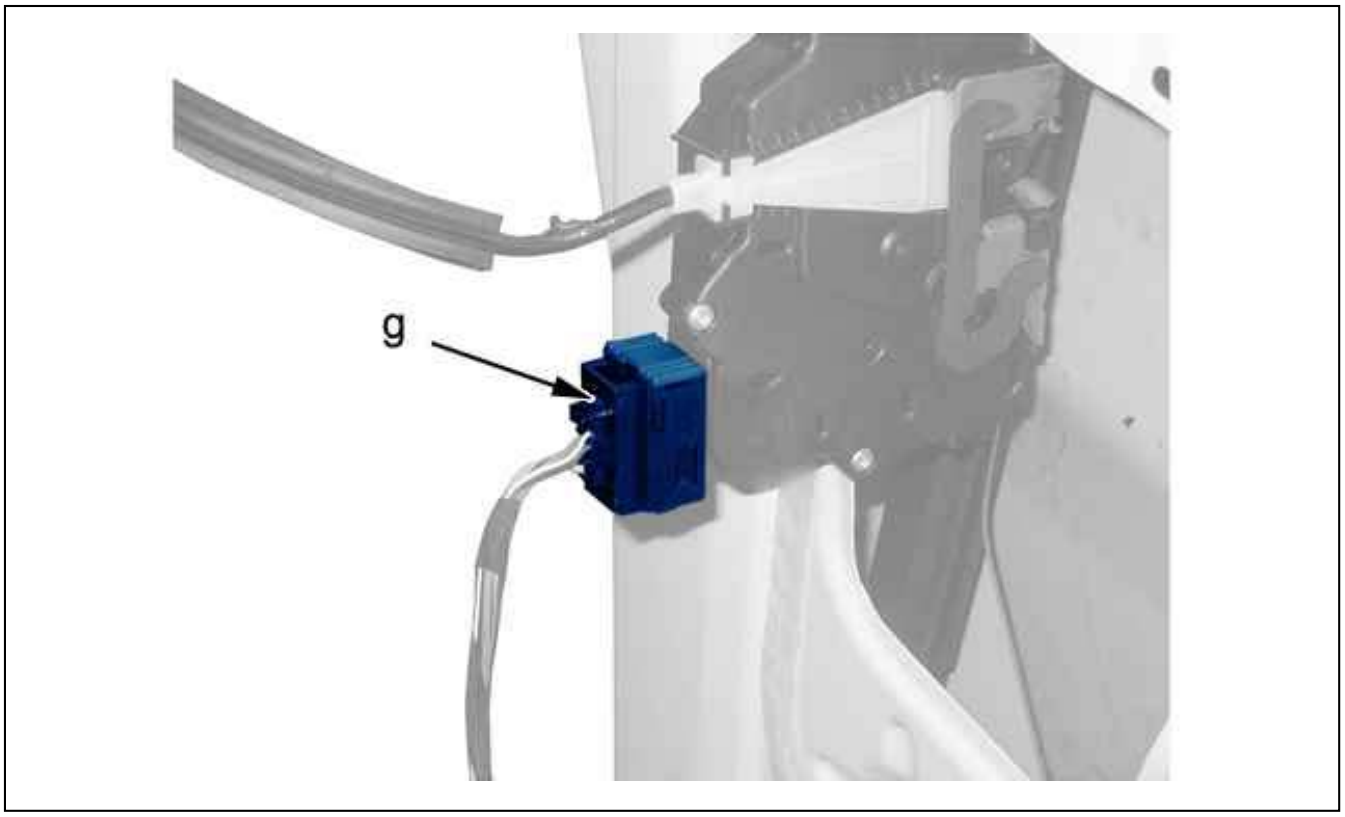

Figure : C4CP1RWD

Disconnect the connector (at "g").

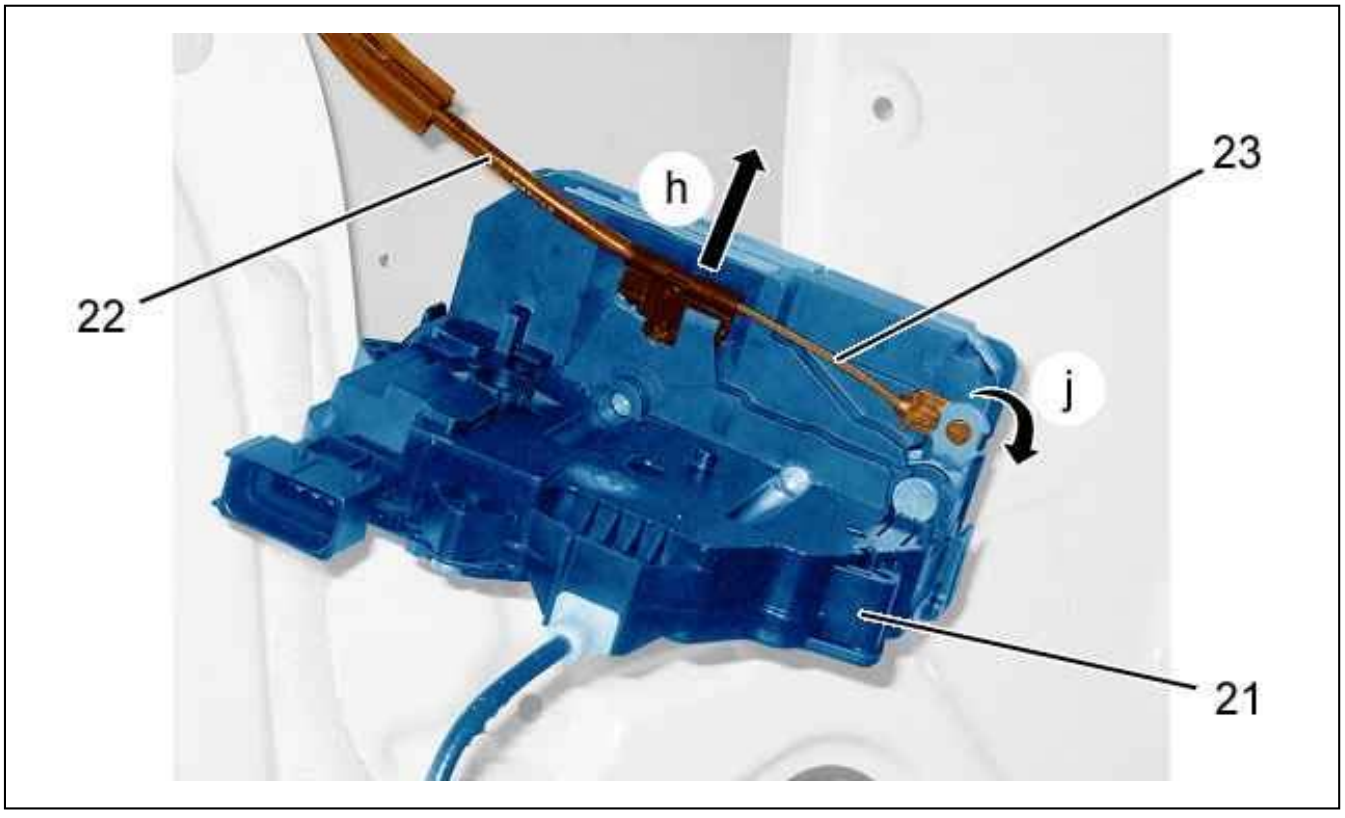

Figure : C5DP06JD

Detach the cable guide (22) (following "h").
Pivot the cable bracket (following "j").

Unclip the cable (23).
Remove the lock (21).

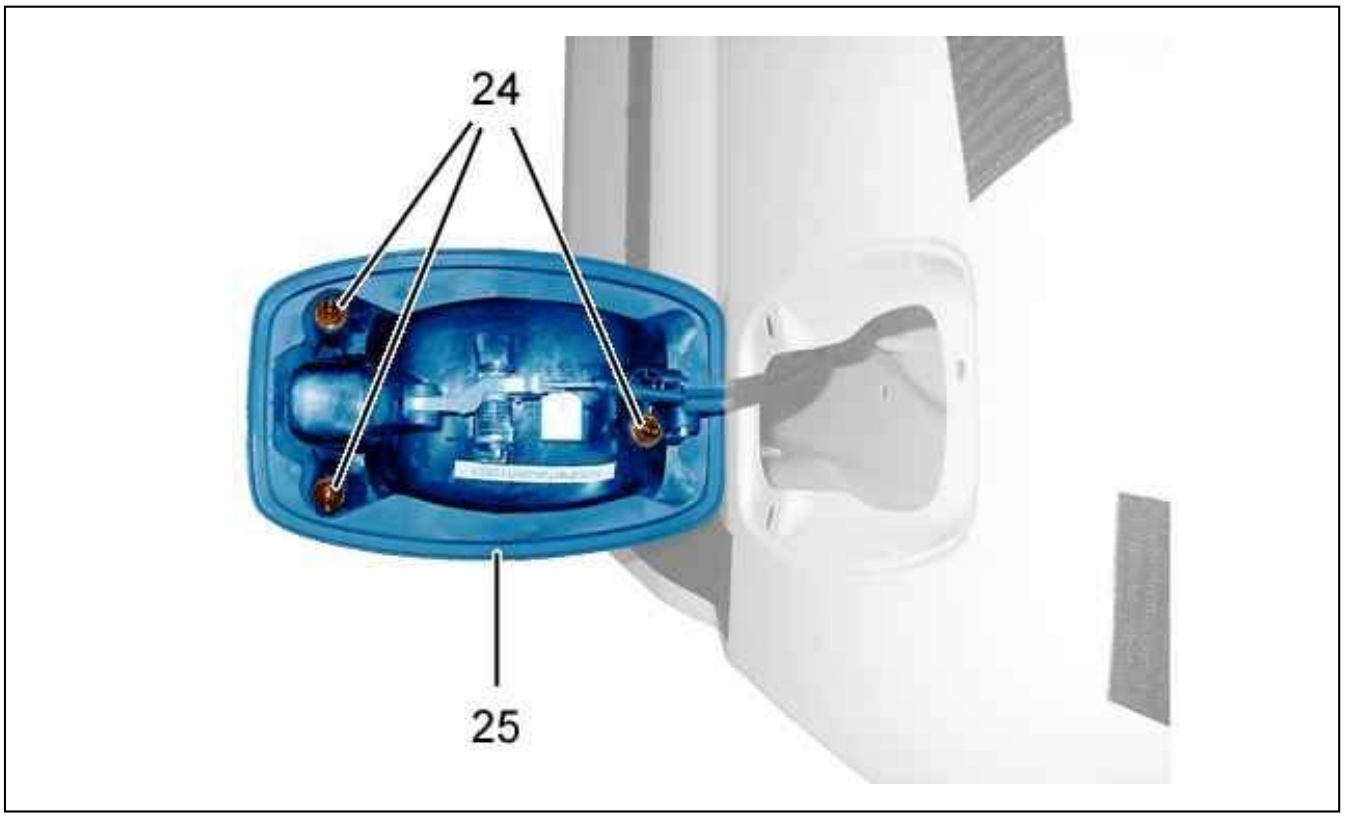

Figure : C4CP1RXD

Remove :

- The bolts (24)
- The interior door opening control handle (25)

Reconnect the battery.
Lower the window ; Using the electric window control.
Disconnect the battery.
Remove the electric window control.

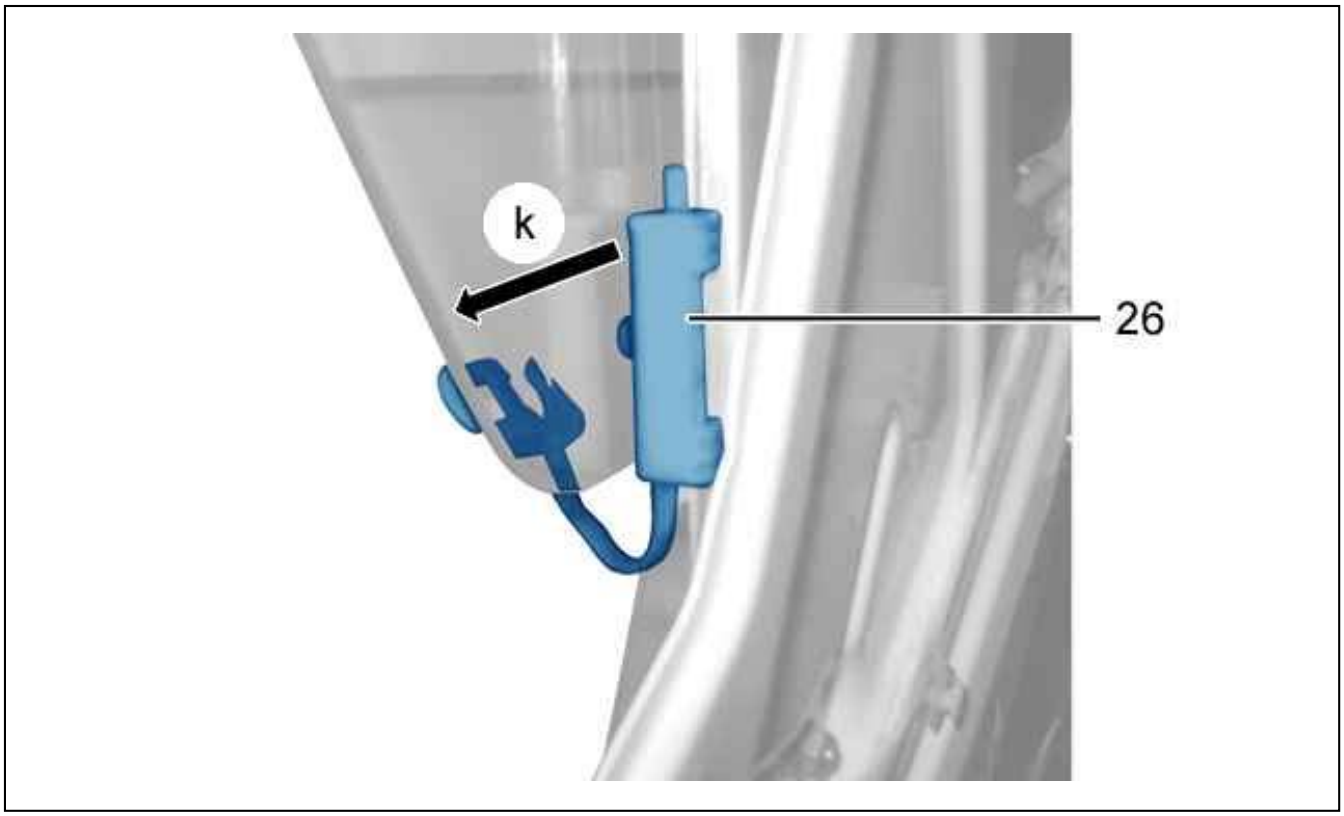

Figure : C5CP09JD

Remove the window surround seal.
Unclip the window fixing (26) (following "k").

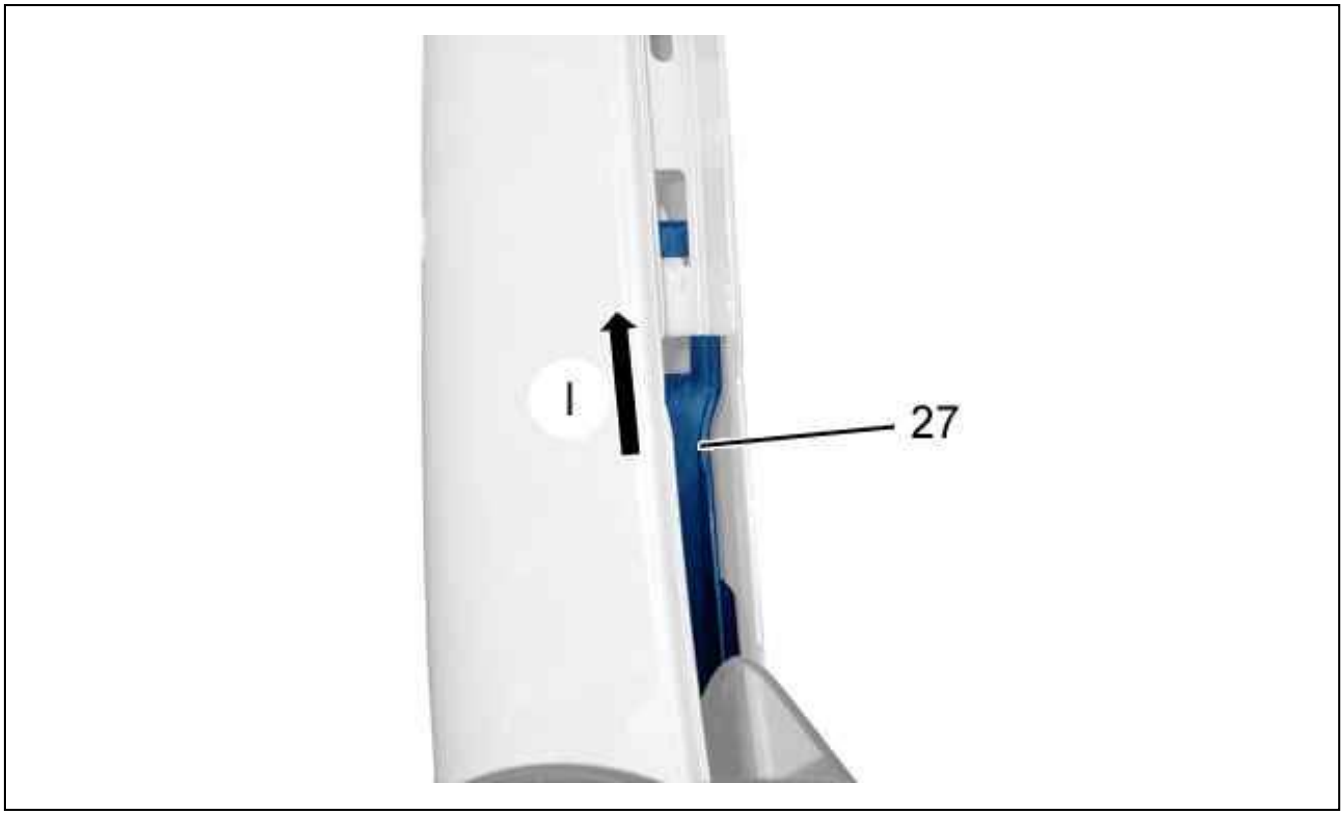

Figure : C4CP1RYD

Remove the window guide (27) (following "l").

Detach the glass (following "I").
Remove :

- The glass
- The window winder mechanism (see the relevant operation)

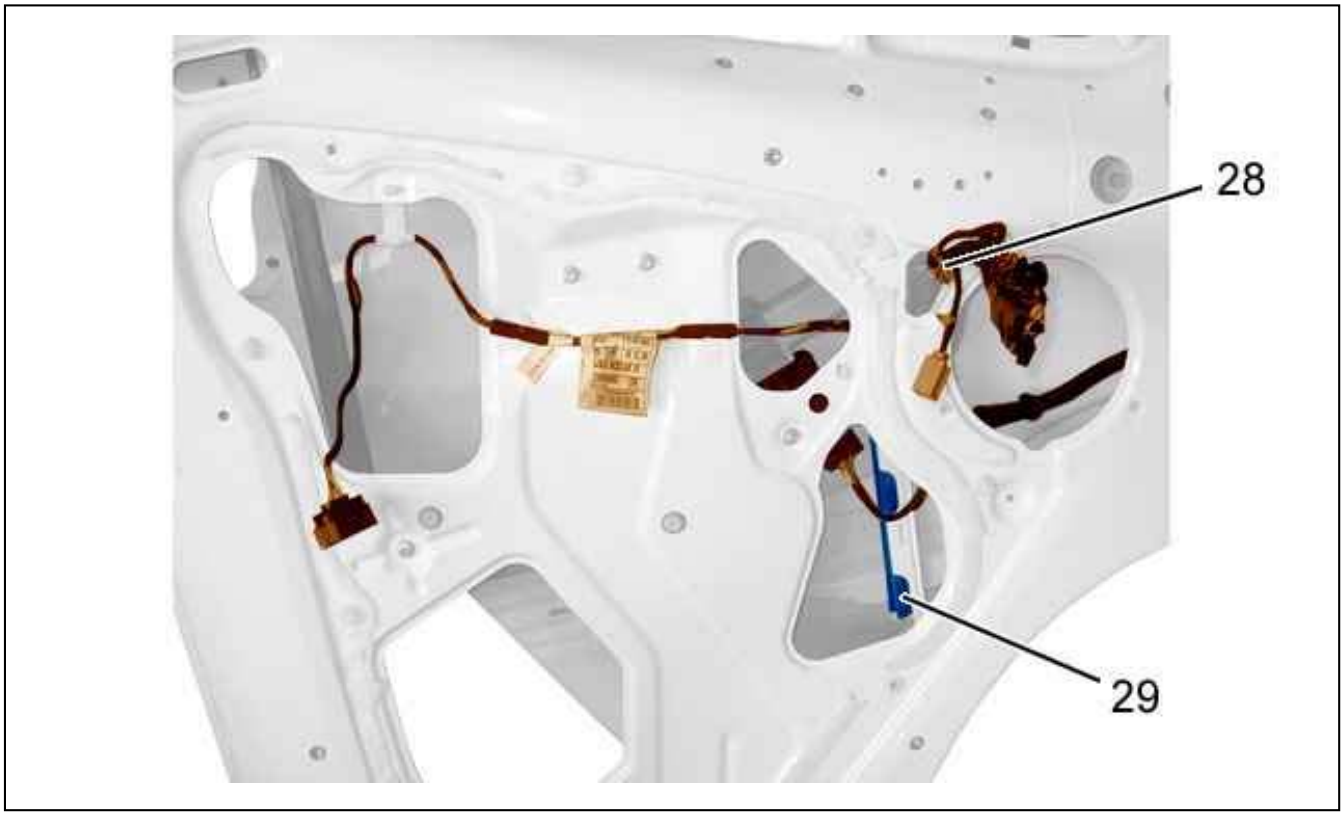

Figure : C4CP1RZD

Remove the fixed guide seal (29).
Take the harness out of the door (28).

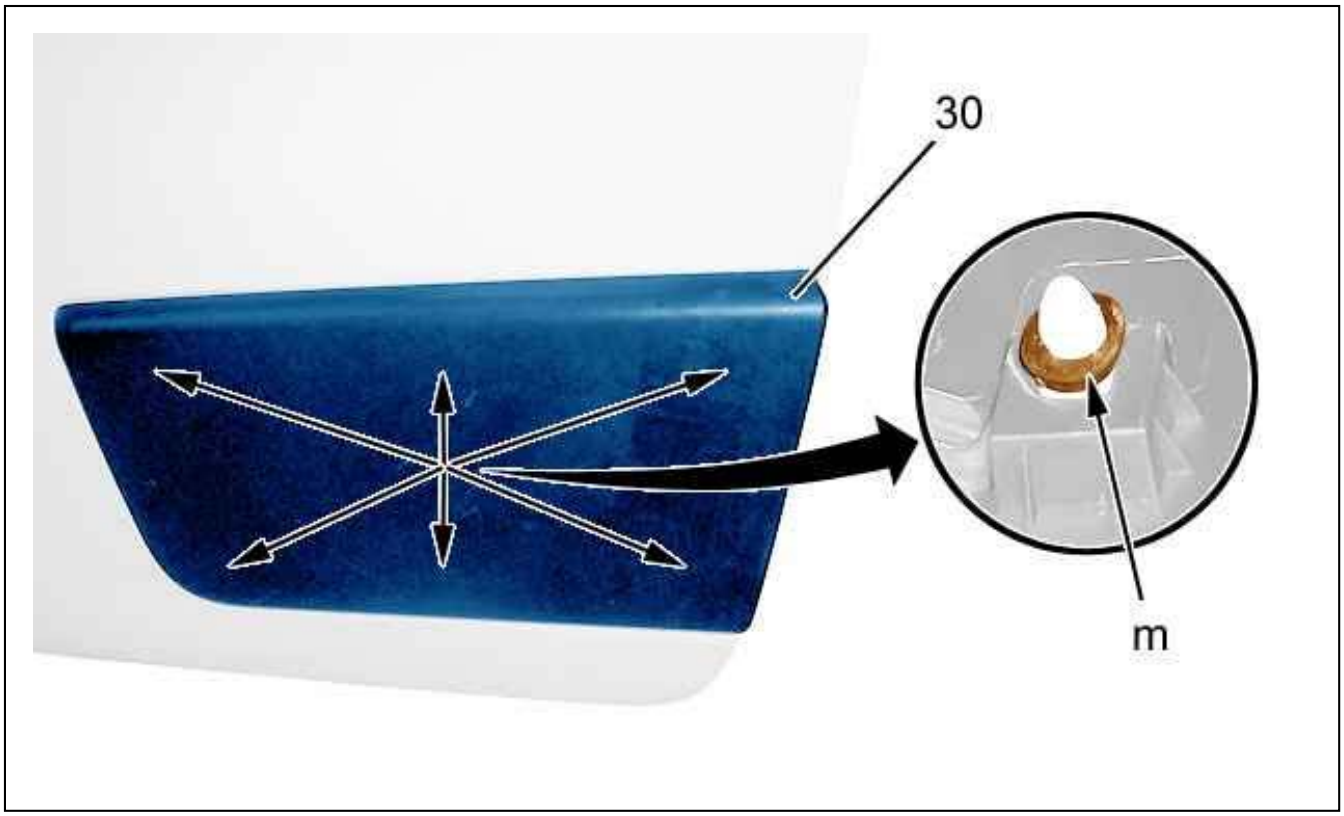

Figure : C4CP1S0D

Unclip the moulding clips (at "m").
Remove the door capping (30).

N.B. : Prepare for the replacement of the clips .

3. Re-assembling

Carry out the re-trim operations in the reverse order to the stripping operations.
Check all the equipment works.

STRIPPING - RE-ASSEMBLING : FRONT DOOR

ESSENTIAL : Observe the safety and cleanliness recommendations.

1. Recommended tools

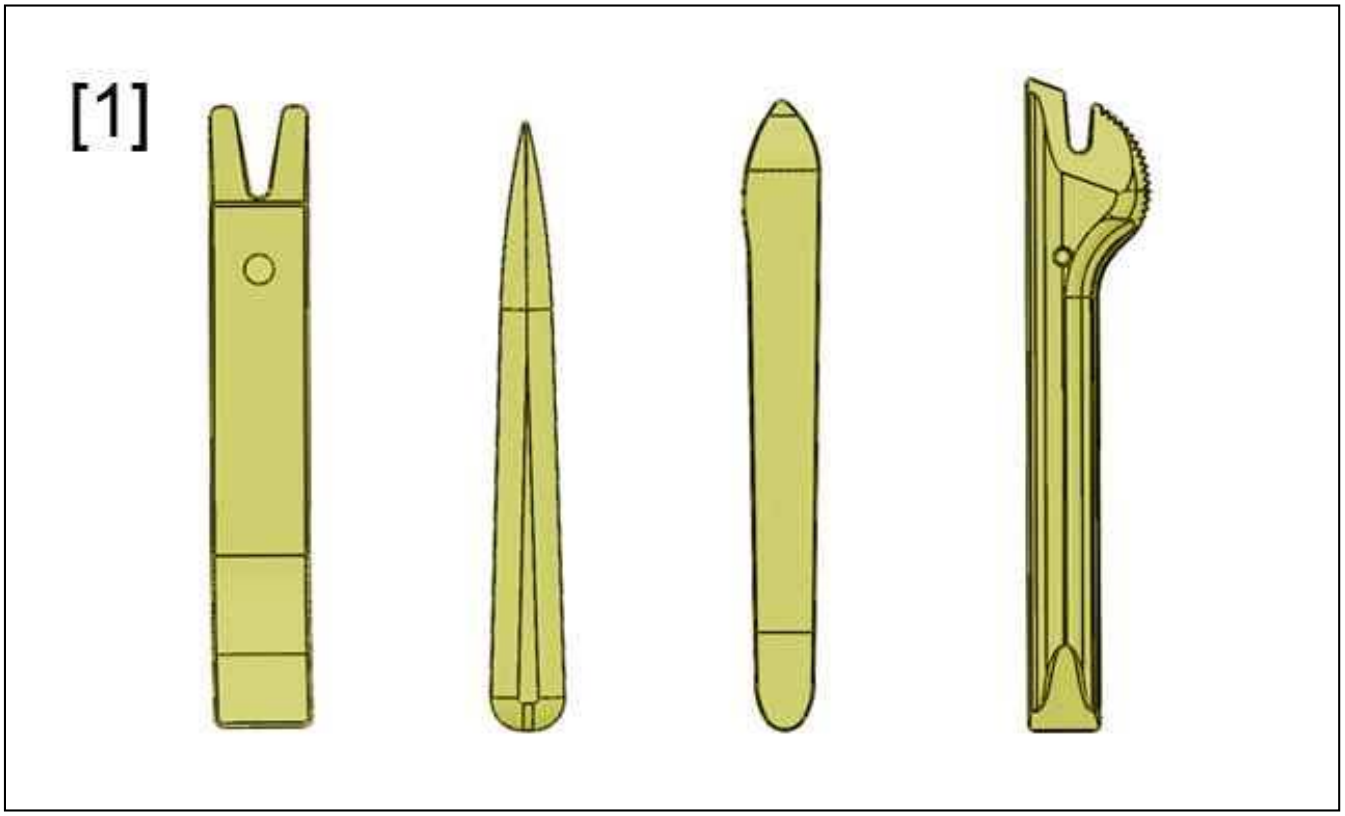

Figure : E5AP30WD

[1] Stripping tool (-).1350-ZZ.

2. Stripping

Perform the following operations :

- Switch off the ignition
- Wait 3 minutes before disconnecting the battery
- Disconnect the battery



Figure : C5GP0NSD

Remove :

- The bolts (1)
- The glove box (2)



Figure : C5GP0NTD

Unclip the upper cover (3) (following "a") ; Using tool [1].

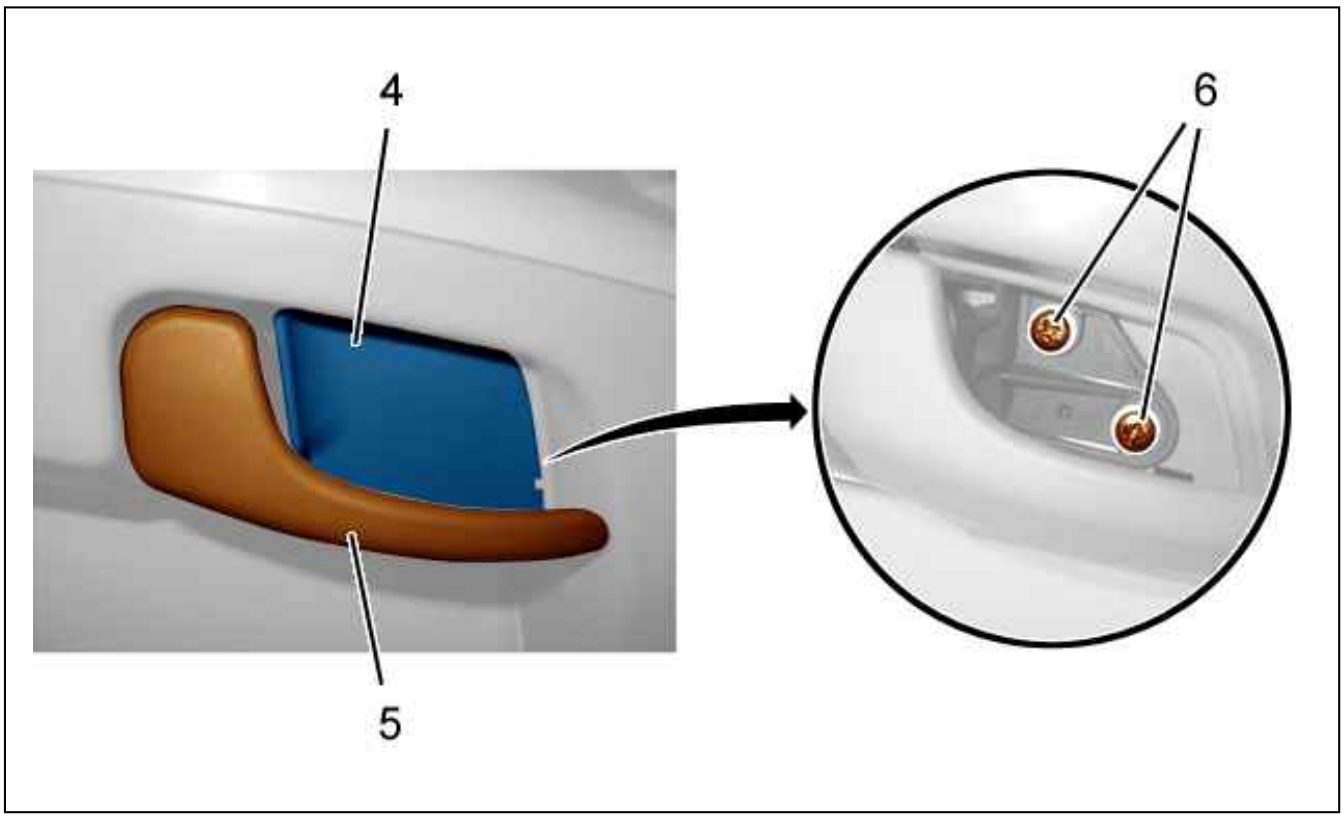

Figure : C5GP0NUD

Unclip the door opening control handle (5) finisher (4) ; Using tool [1].
Remove :

- The bezel (4)
- The bolts (6)

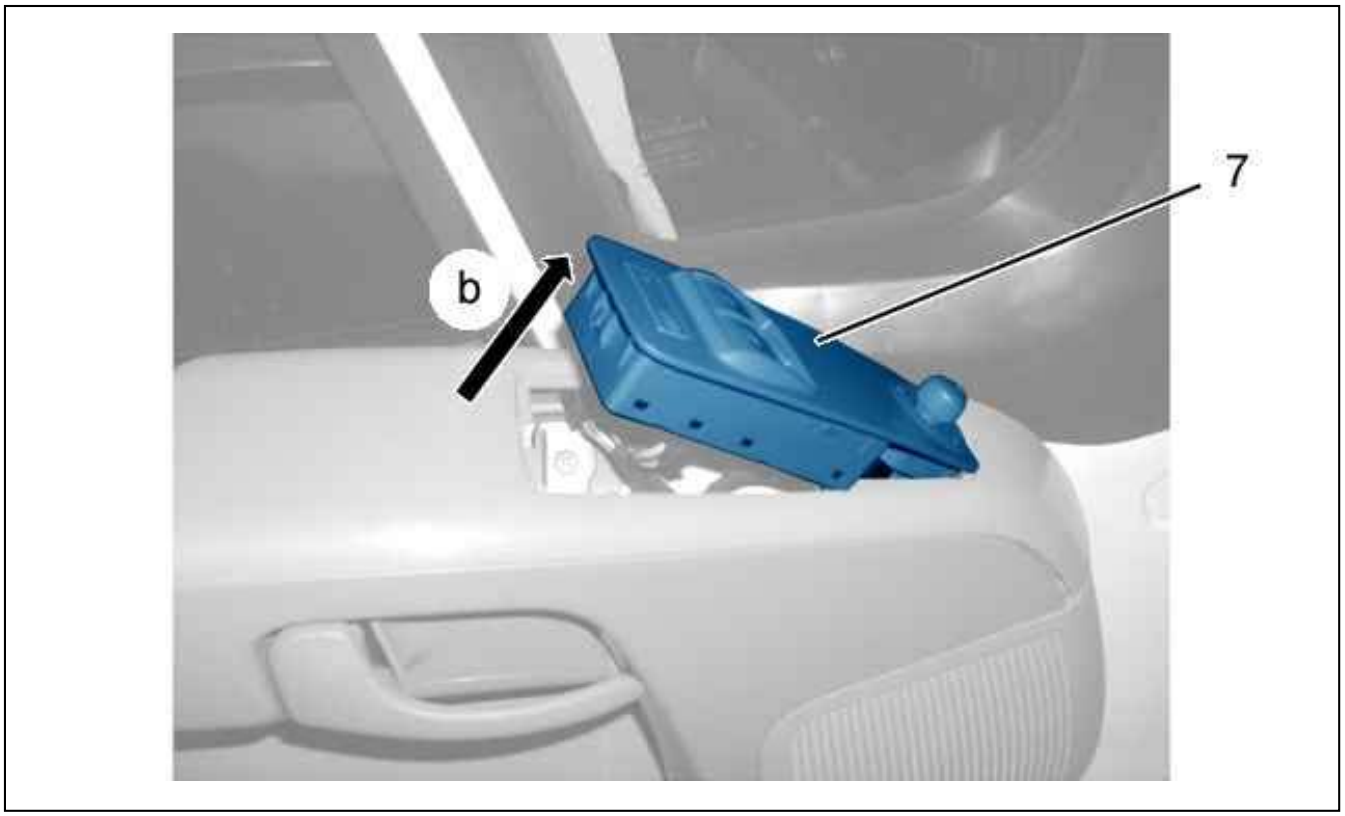

Figure : C5GP0NVD

Detach the electric window control (7) (following "b") ; Using tool [1].

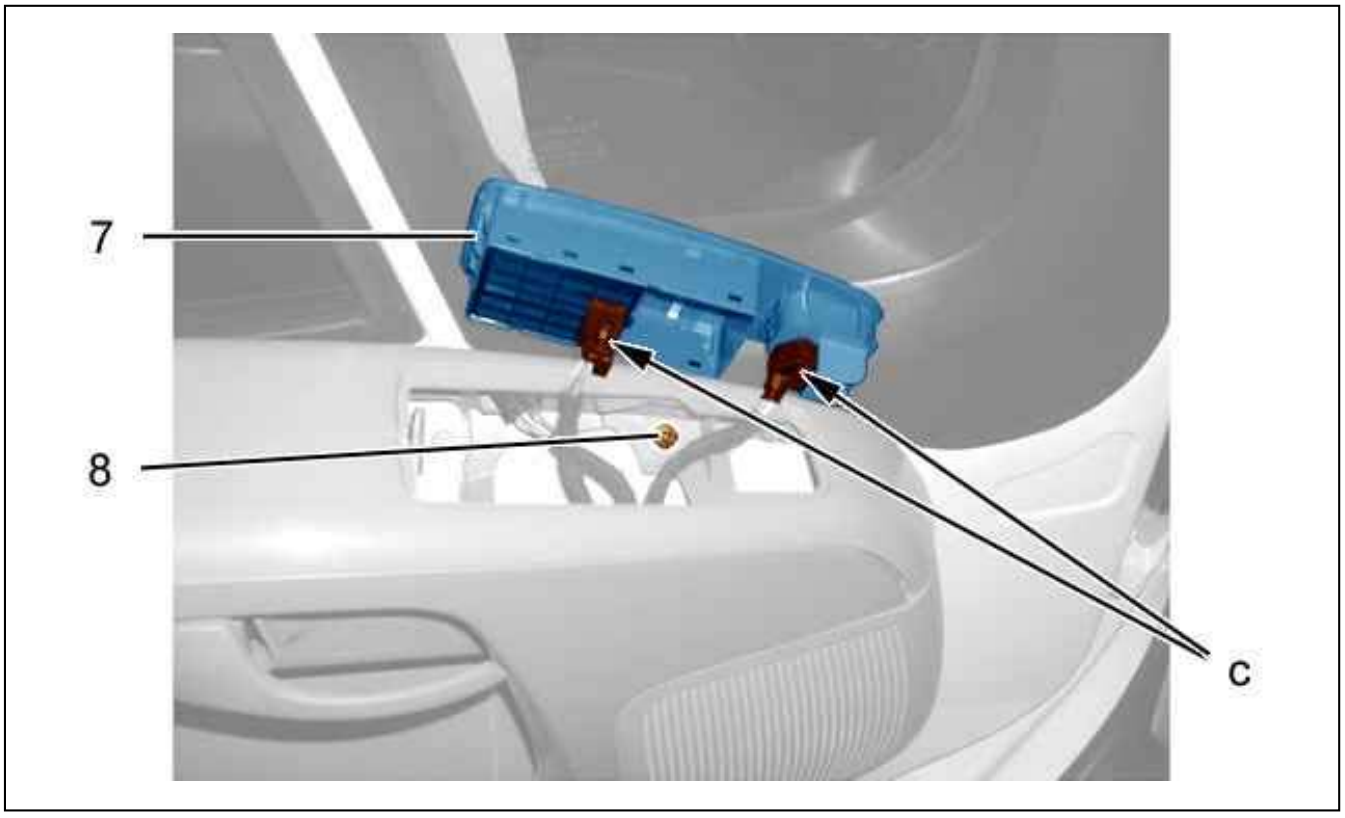

Figure : C5GP0NWD

Disconnect the 2 connectors (at "c").
Remove :

- The electric window control (7)
- The (8) bolt

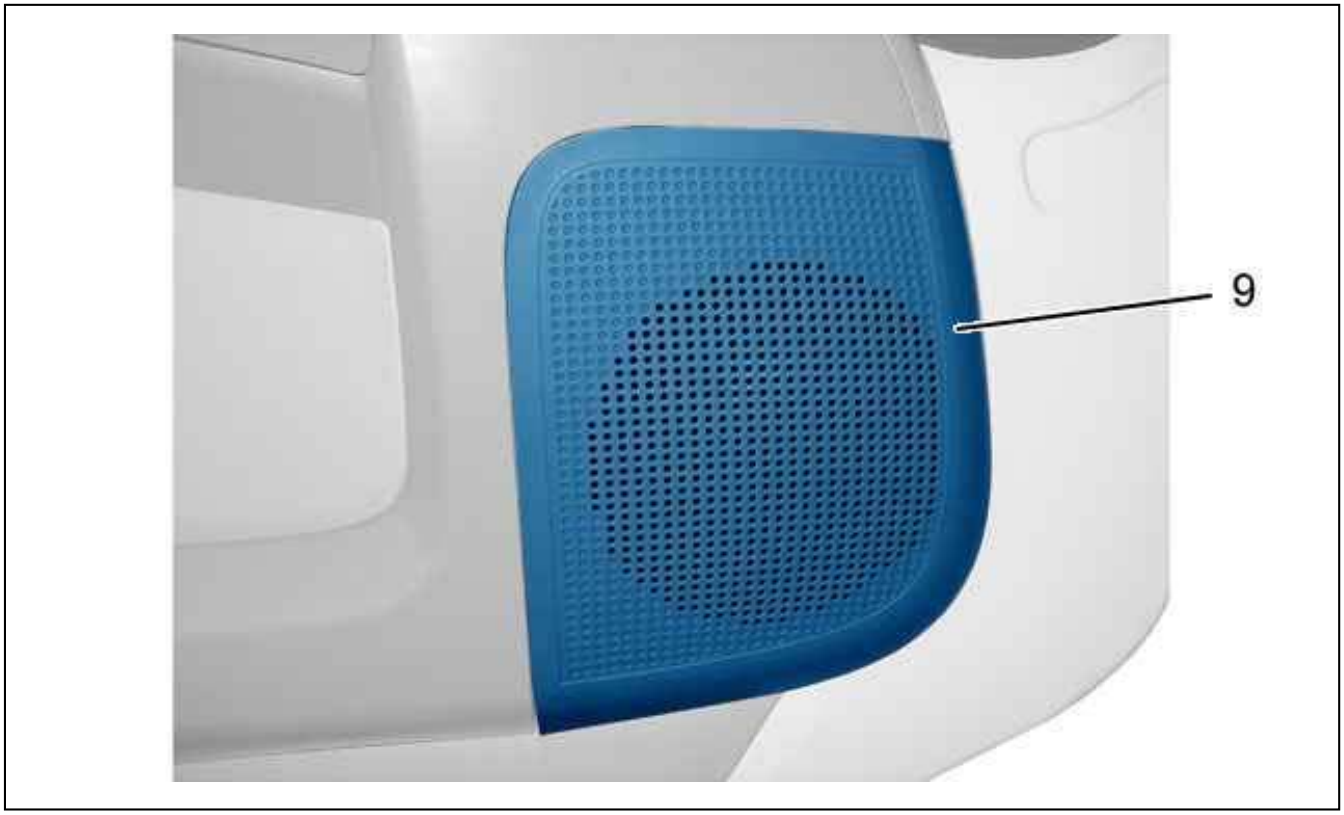

Figure : C5GP0NXD

Unclip and remove the speaker grille (9) ; Using tool [1].

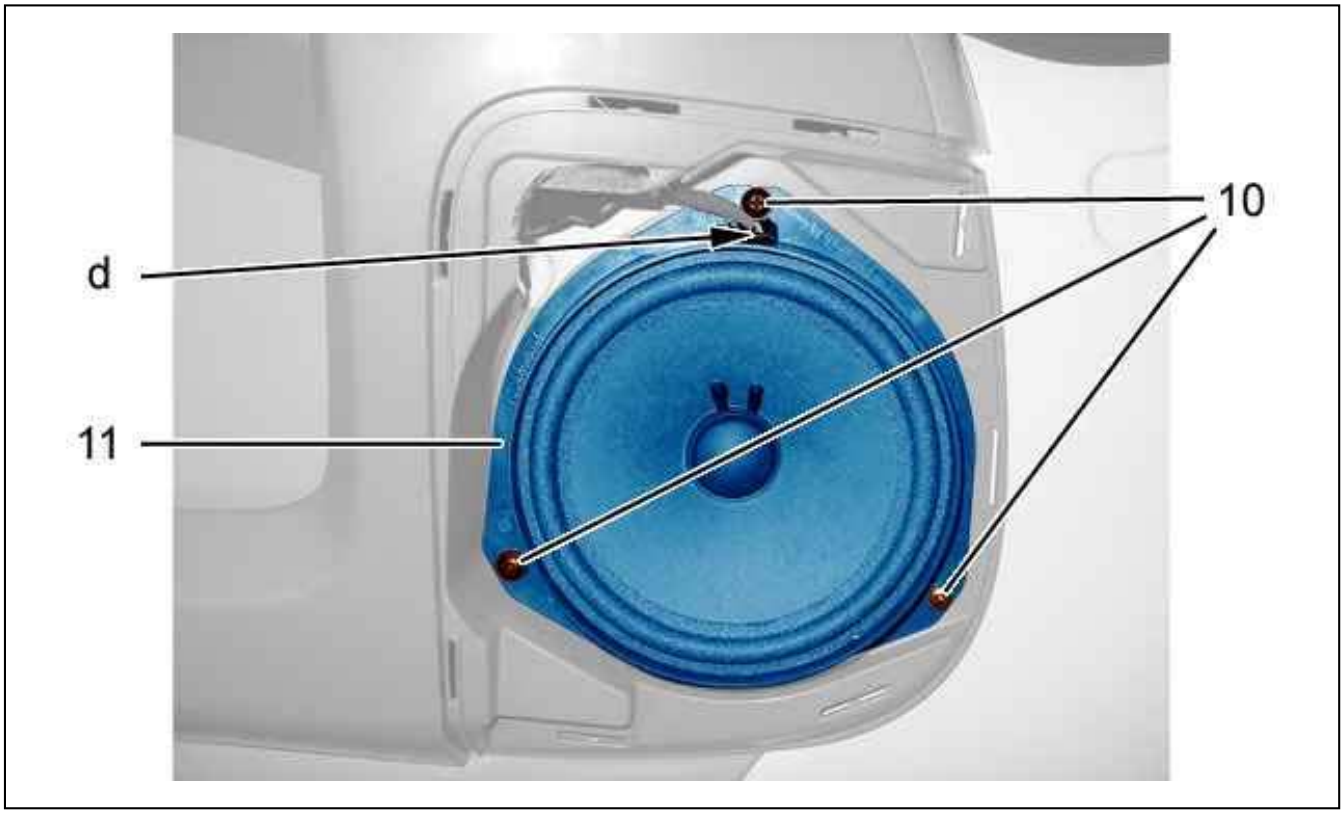

Figure : C5GP0NYD

Remove the bolts (10).
Detach the speaker (11).
Disconnect the connector (at "d").
Remove the speaker (11).



Figure : C5GM0AYD

Unclip : The armrest upper trim (12) (at "e") (following the arrow) ; Using tool [1].
Remove : The armrest upper trim (12).

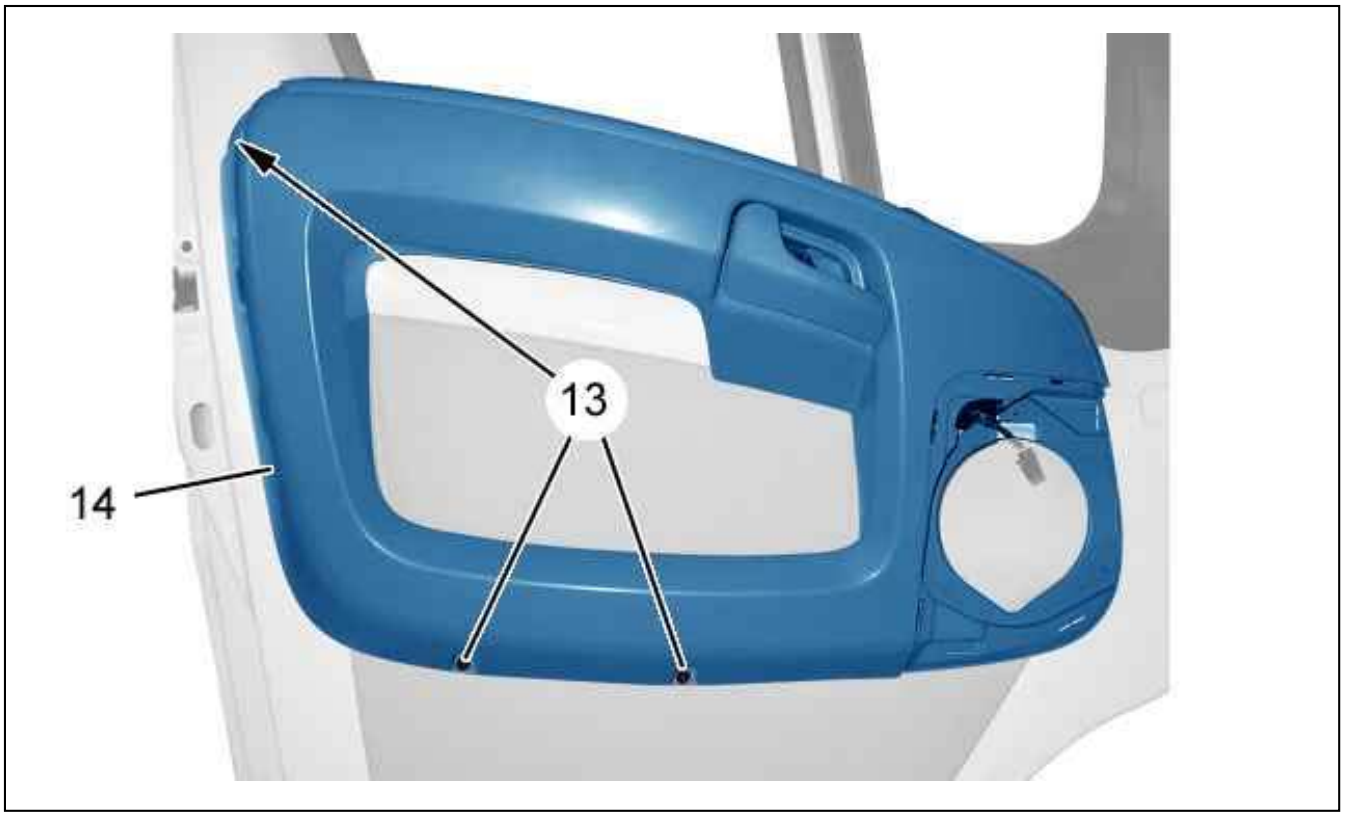

Figure : C5GM0AZD

Remove the armrest (14) bolts (13).
Partially detach the armrest (14).

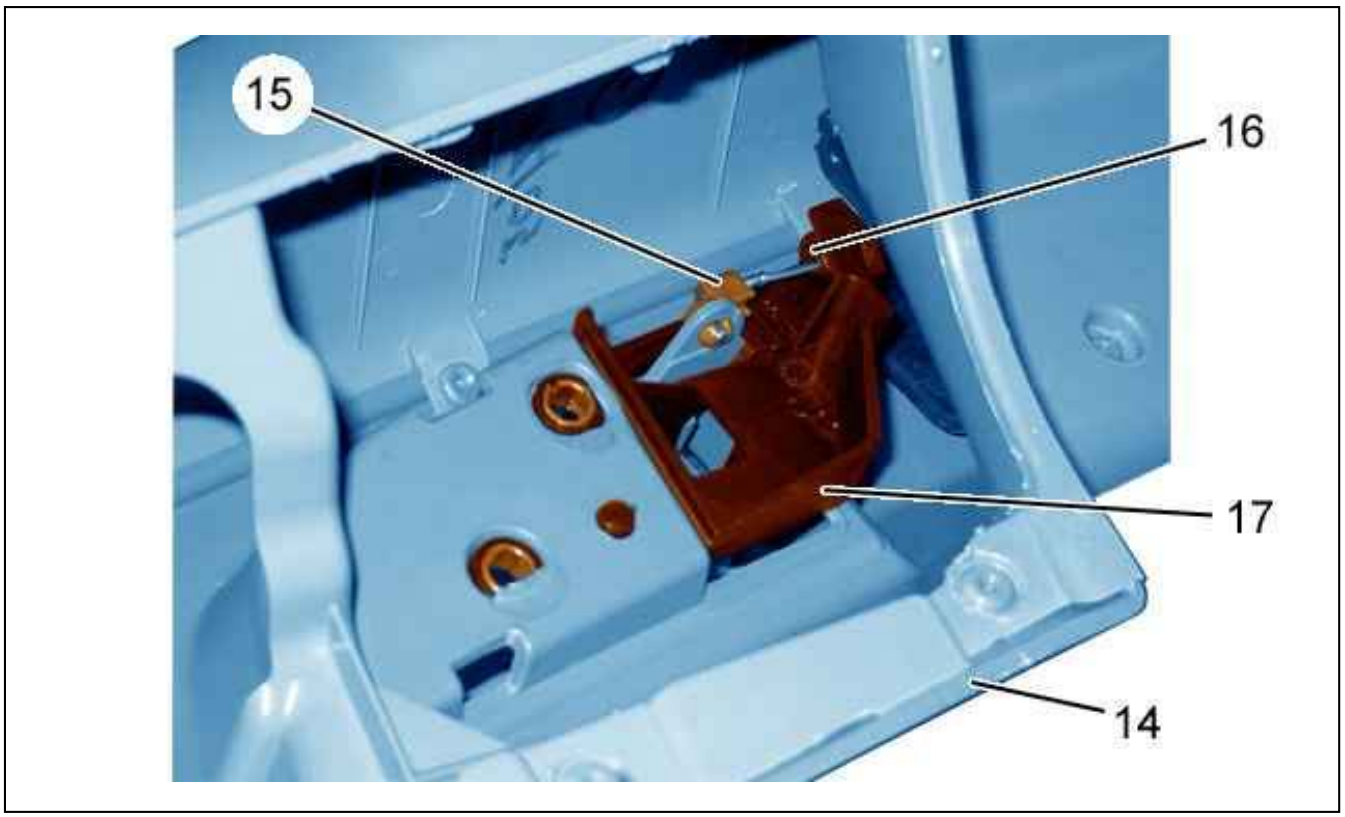

Figure : C5GM0B0D

Detach :

- The clip (15)
- The cable end stop (16)
- The door opening control handle base (17)

Remove the armrest (14).

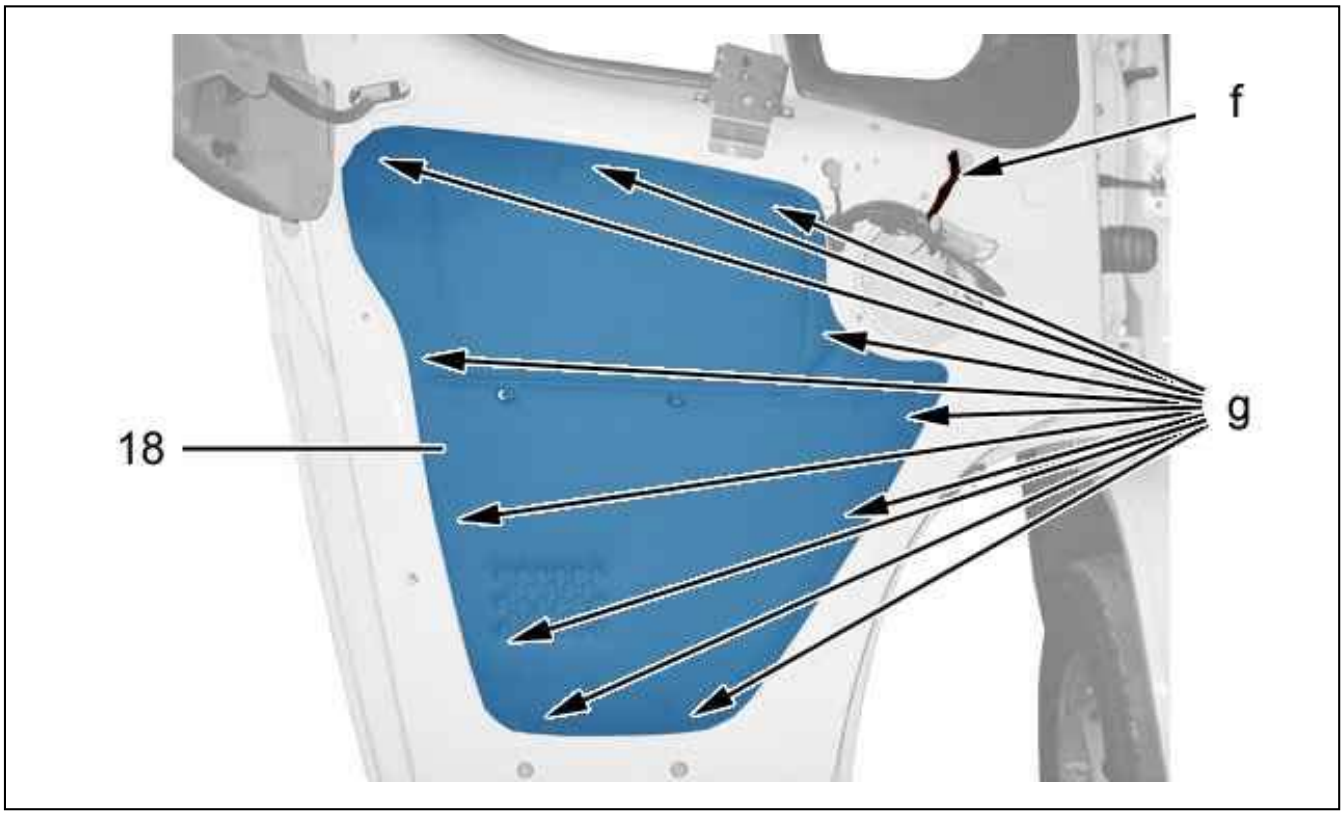

Figure : C5GM0B1D

Unclip the clips (at "g") ; Using tool [1].
Remove the panel with liner (18).
Disconnect the exterior mirror connector (at "f").
Remove the exterior rear view mirror .

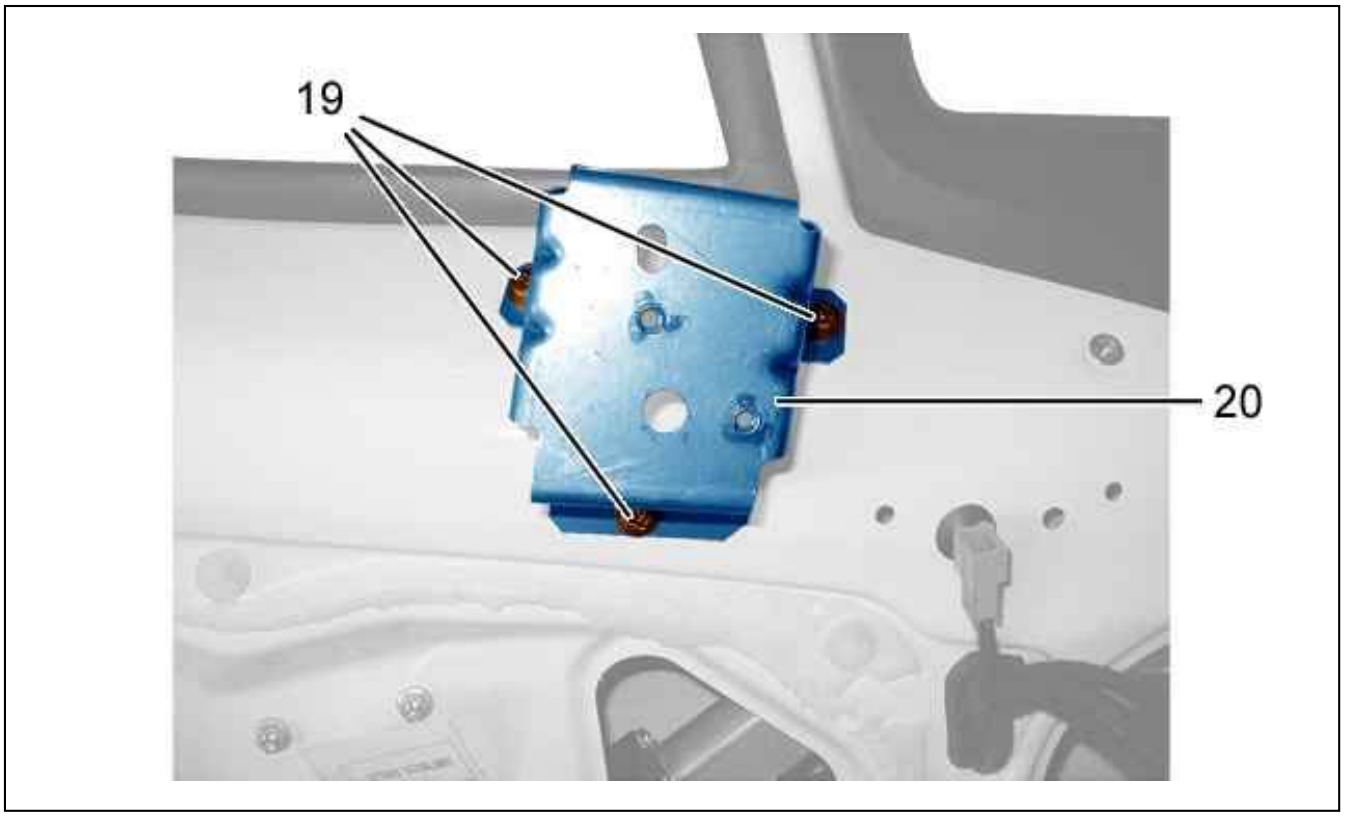

Figure : C4CM0TMD

Remove :

- The bolts (19)
- The door opening control handle support (20)

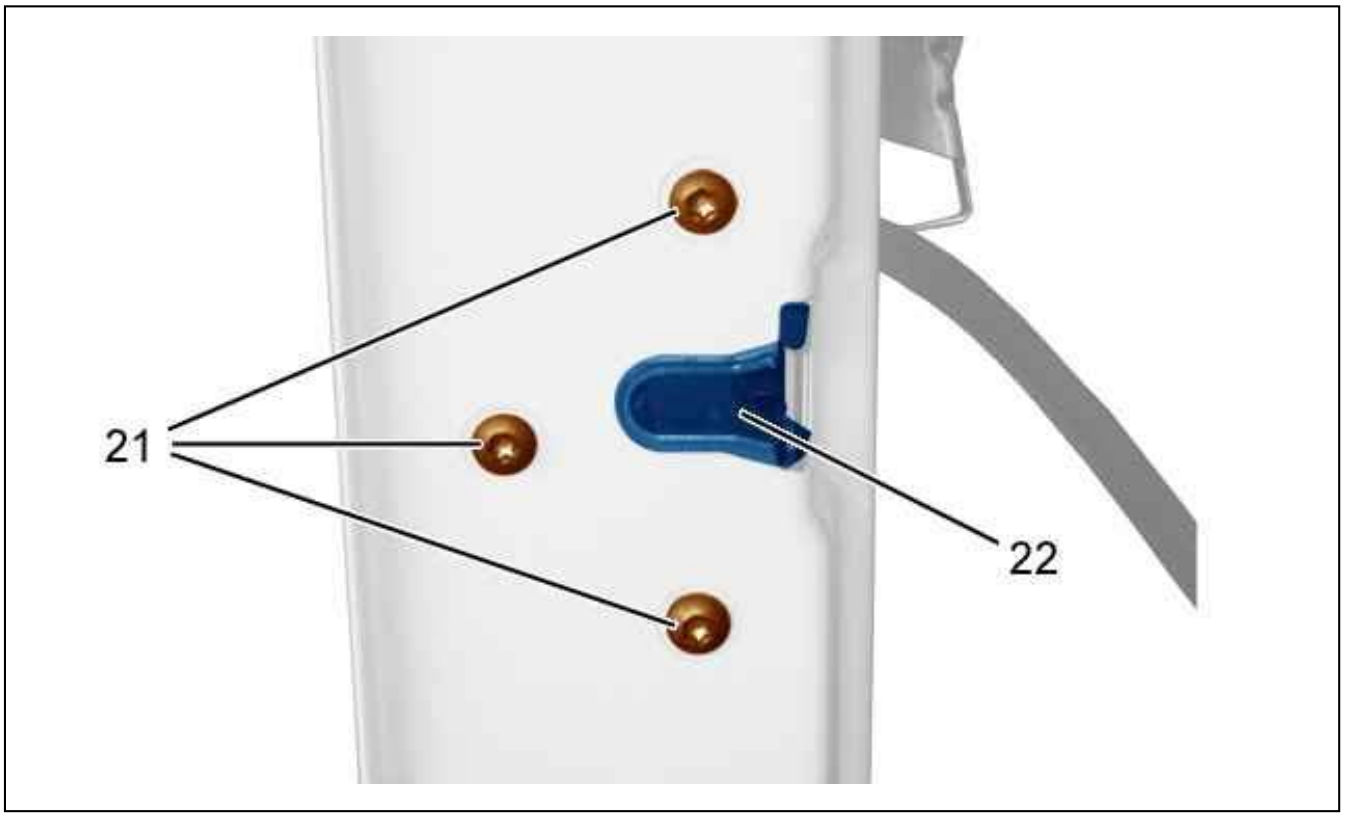

Figure : C4CM0TND

Remove the bolts (21).

N.B. : Remove the window guide bolt in order to be able to extract the closing mechanism.

Partially detach the lock (22).

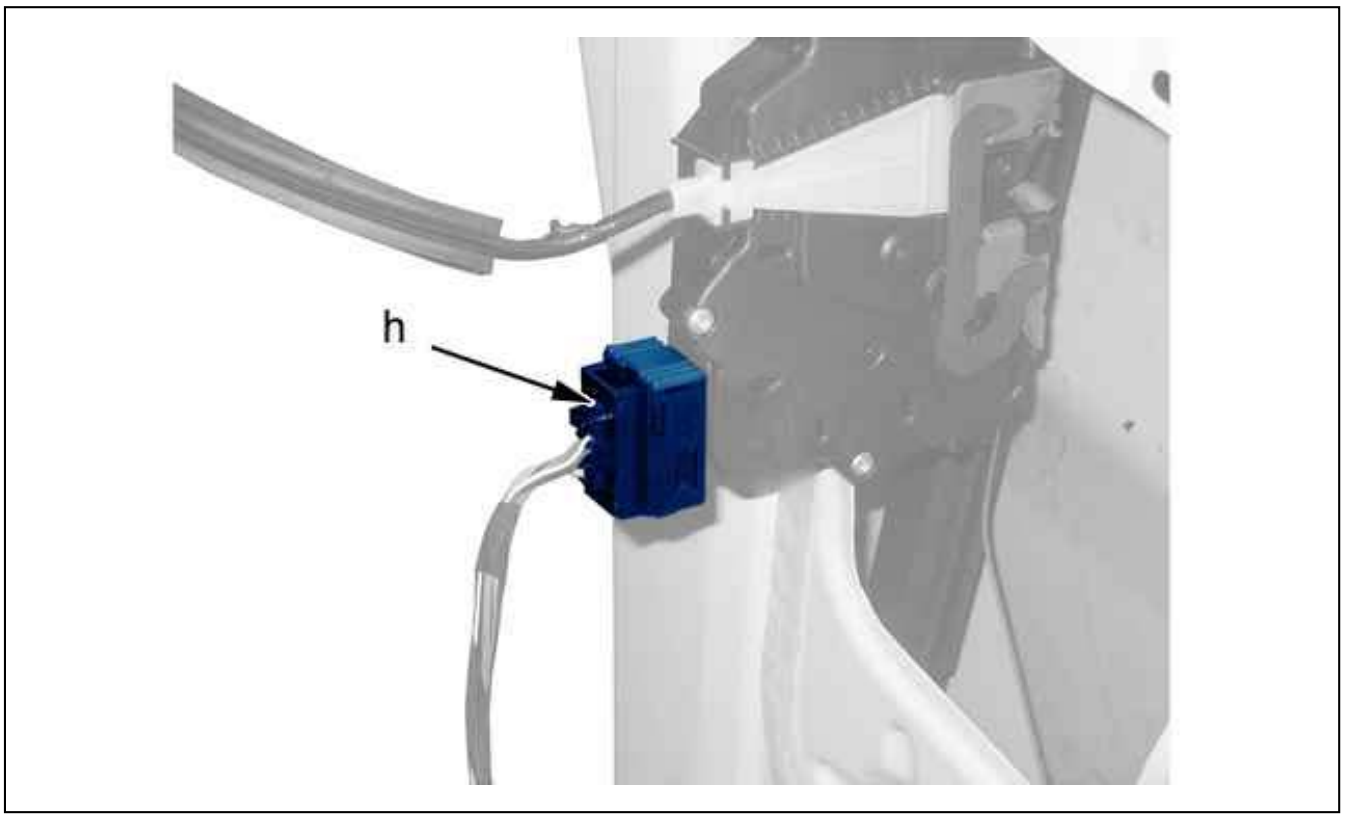

Figure : C4CM0TPD

Disconnect the connector (at "h").

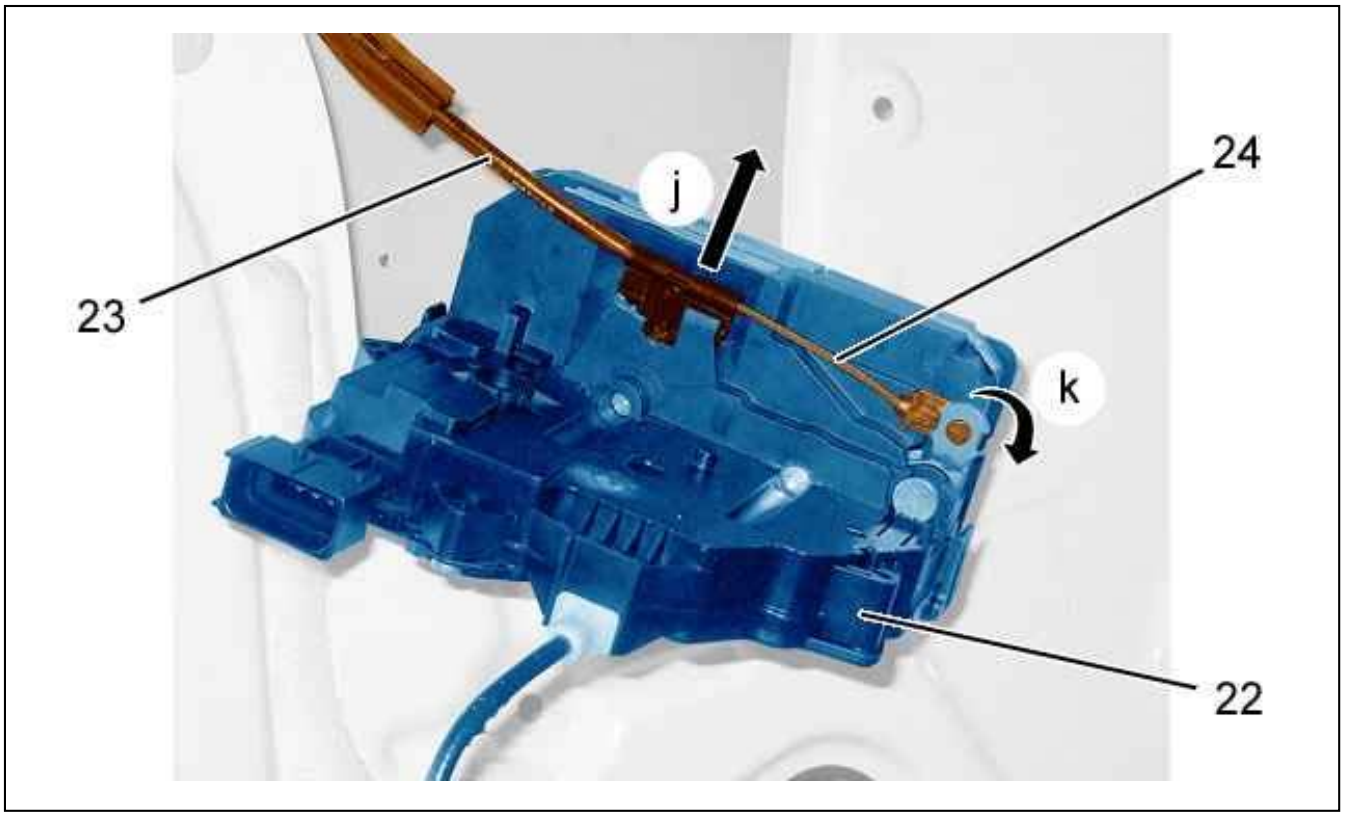

Figure : C5DM02LD

Detach the cable guide (23) (following "j").
Pivot the cable bracket (following "k").
Unclip the cable (24).
Remove the lock (22).

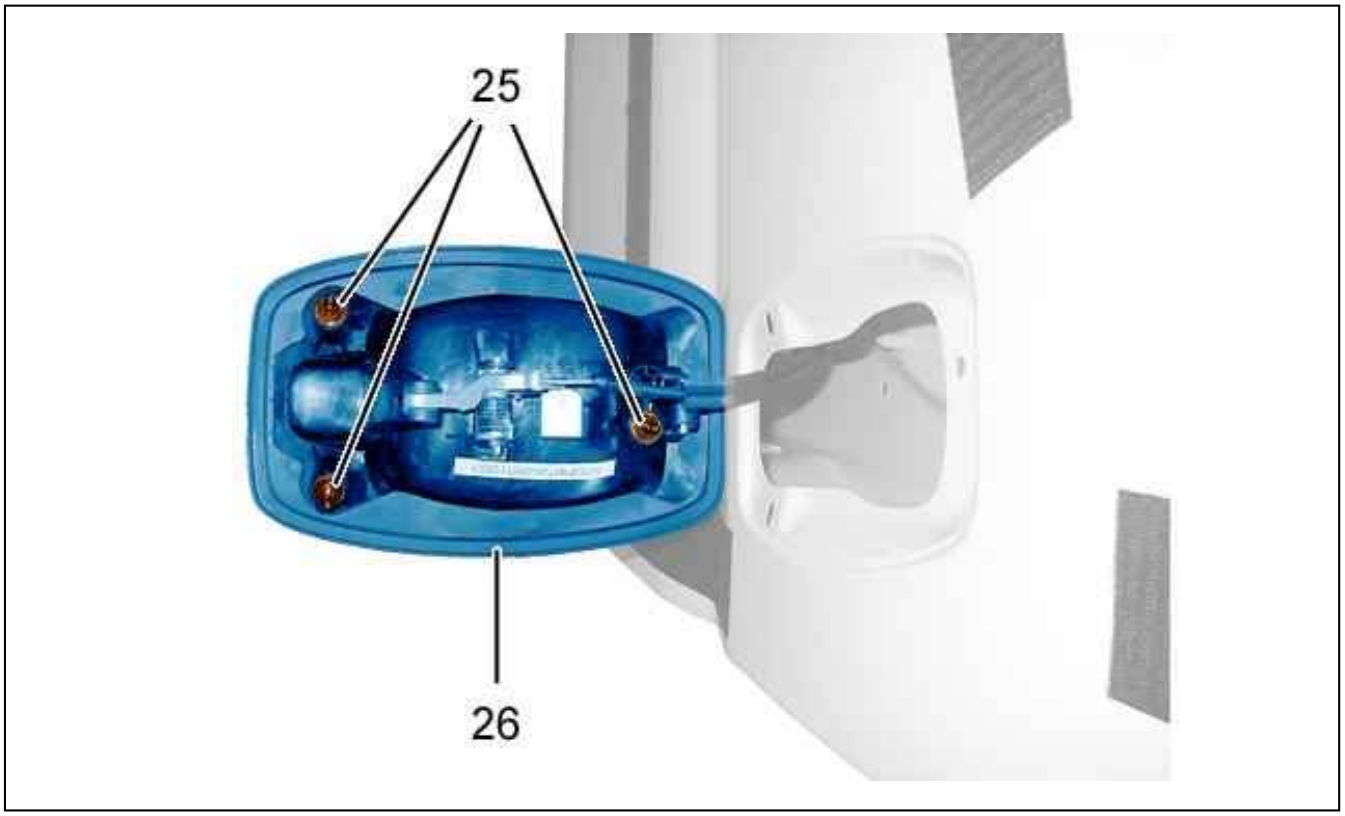

Figure : C4CM0TQD

Remove :

- The bolts (25)
- The interior door opening control handle (26)

Reconnect the battery.
Lower the window ; Using the electric window control.
Disconnect the battery.
Remove the electric window control.

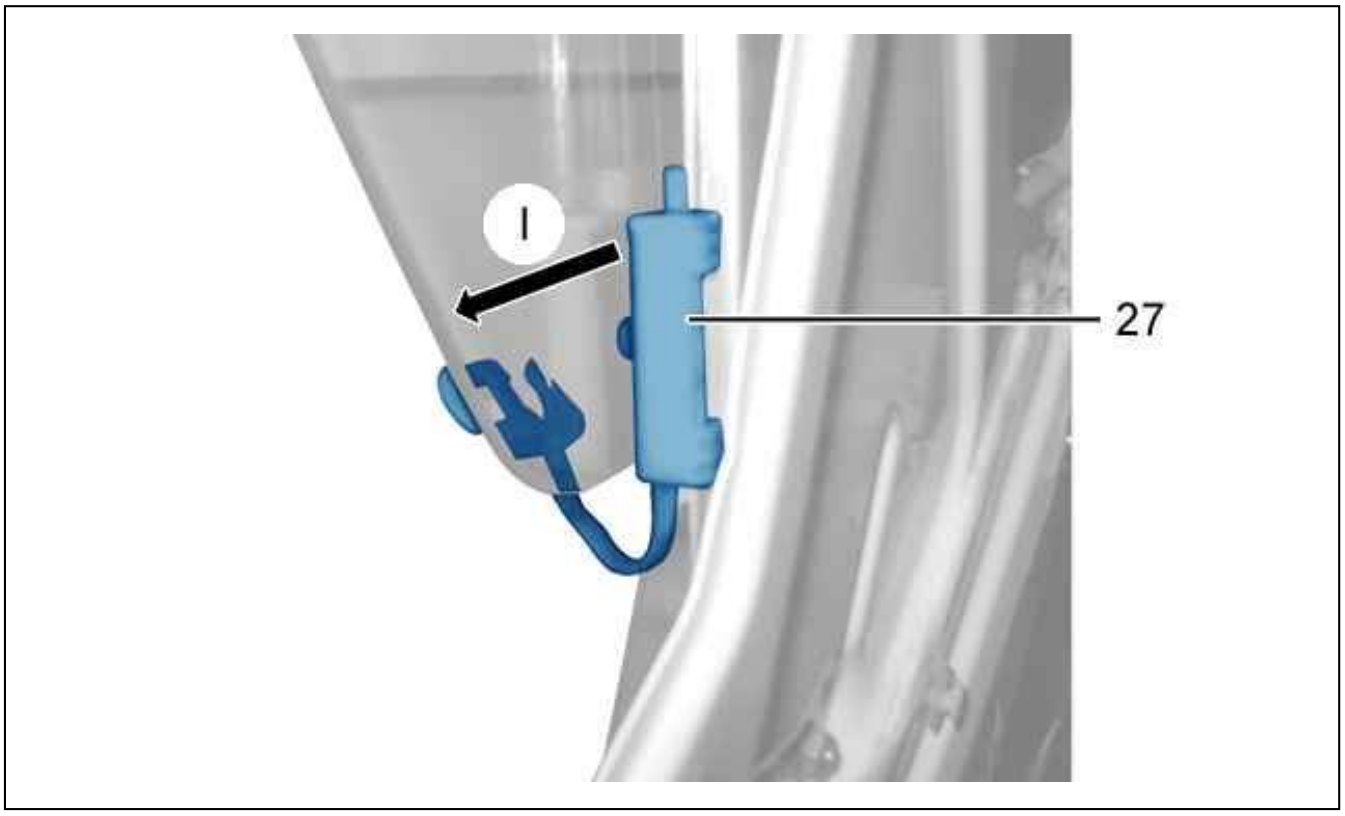

Figure : C5CM01SD

Remove the window surround seal.
Unclip the window fixing (27) (following "I") ; Using tool [1].

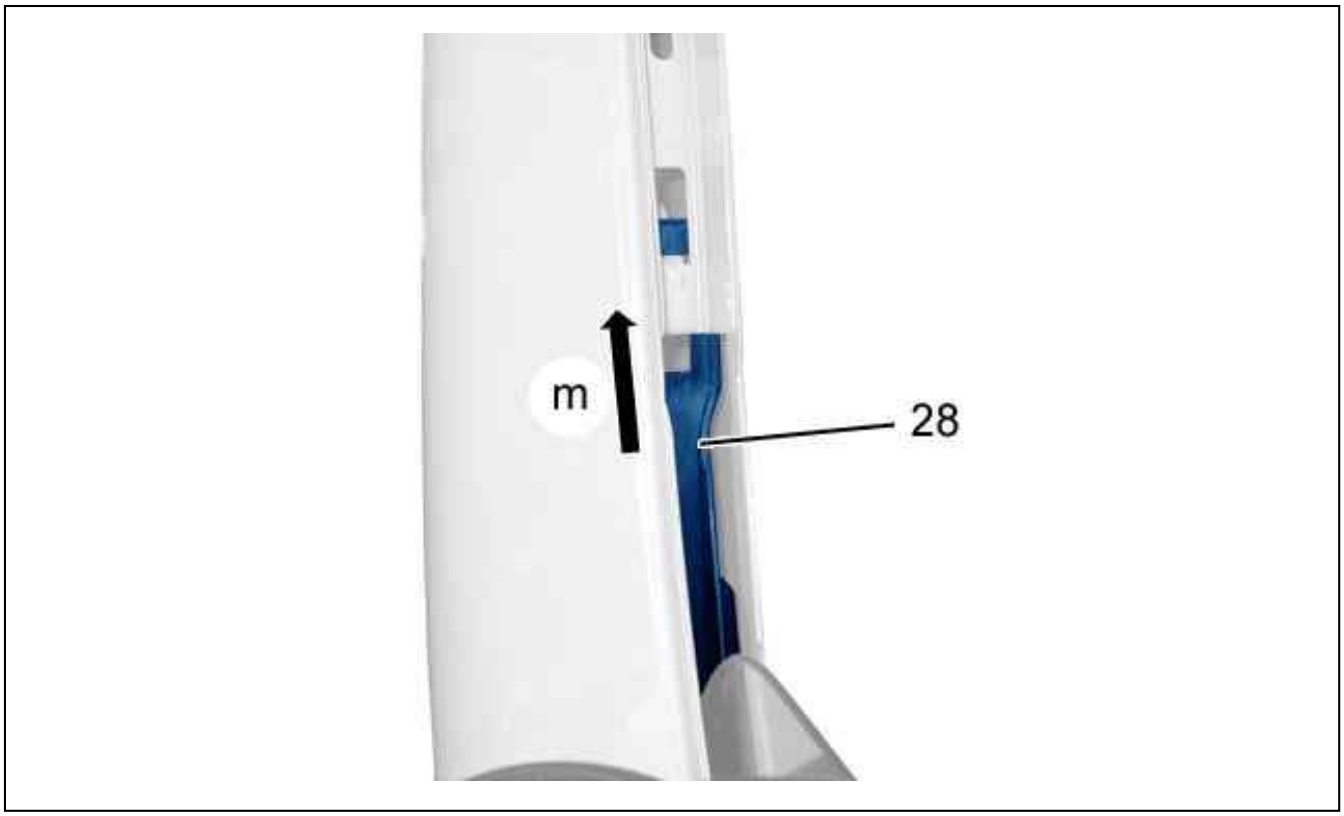

Figure : C4CM0TRD

Remove the window guide (28) (following "m").
Detach the glass (following "m").
Remove :

- The glass
- The window winder mechanism

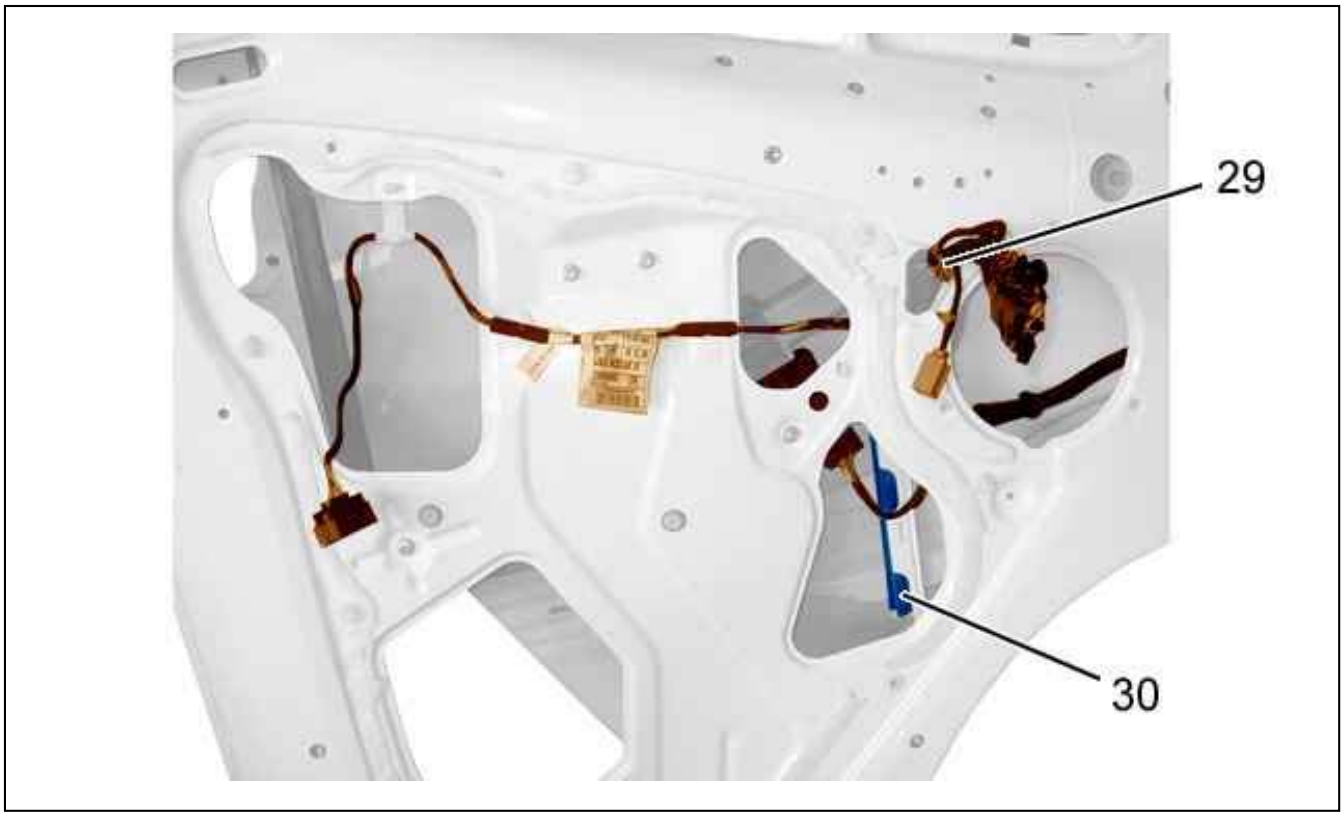

Figure : C4CM0TSD

Remove the fixed guide seal (30).
Take the harness out of the door (29).

3. Re-assembling

Carry out the re-trim operations in the reverse order to the stripping operations.
Check all the equipment works.

STRIPPING - RE-ASSEMBLING : THE SIDE SLIDING DOOR

ESSENTIAL : Observe the safety and cleanliness recommendations .

1. Tooling

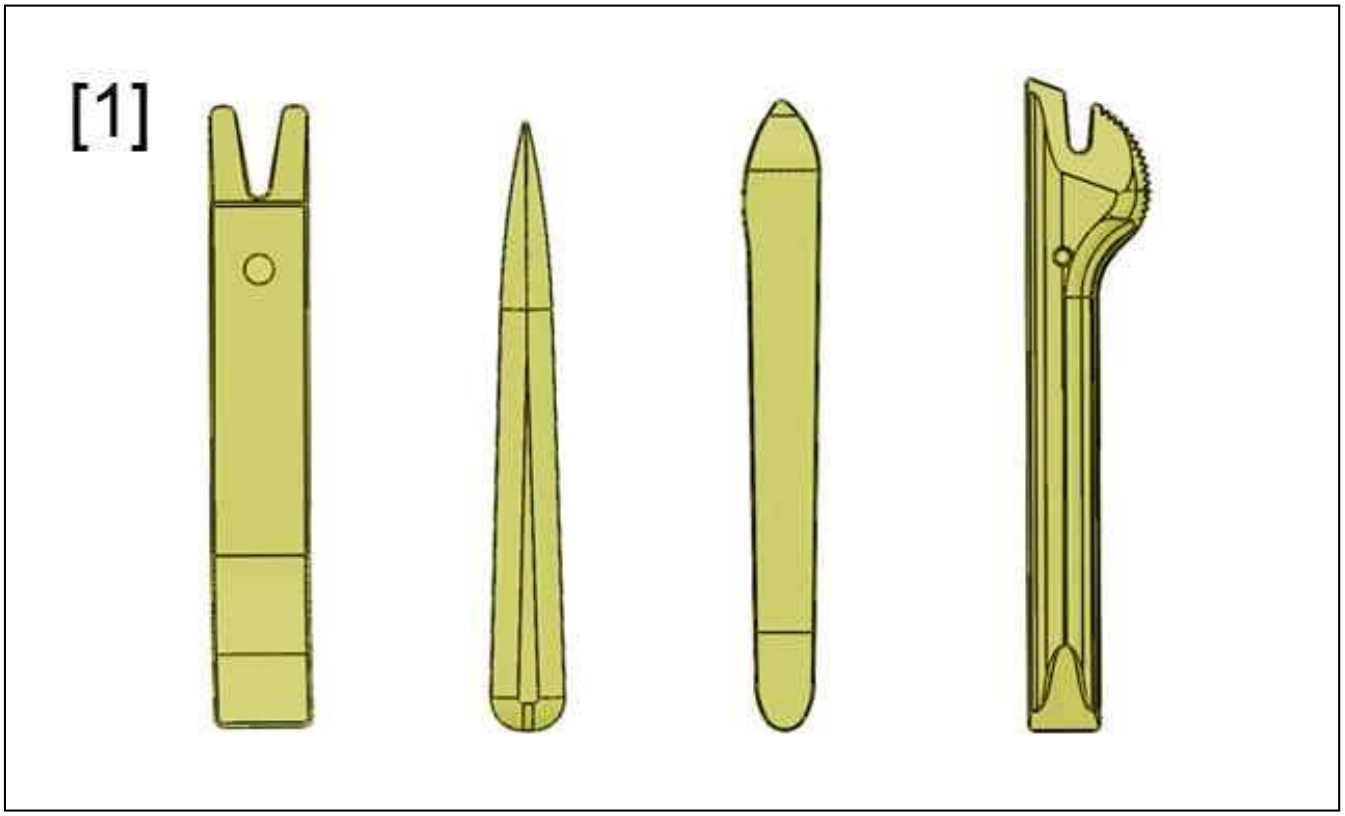

Figure : E5AP30WD

[1] Stripping tools (-).1350-ZZ .

2. Stripping

Remove the sliding side door .

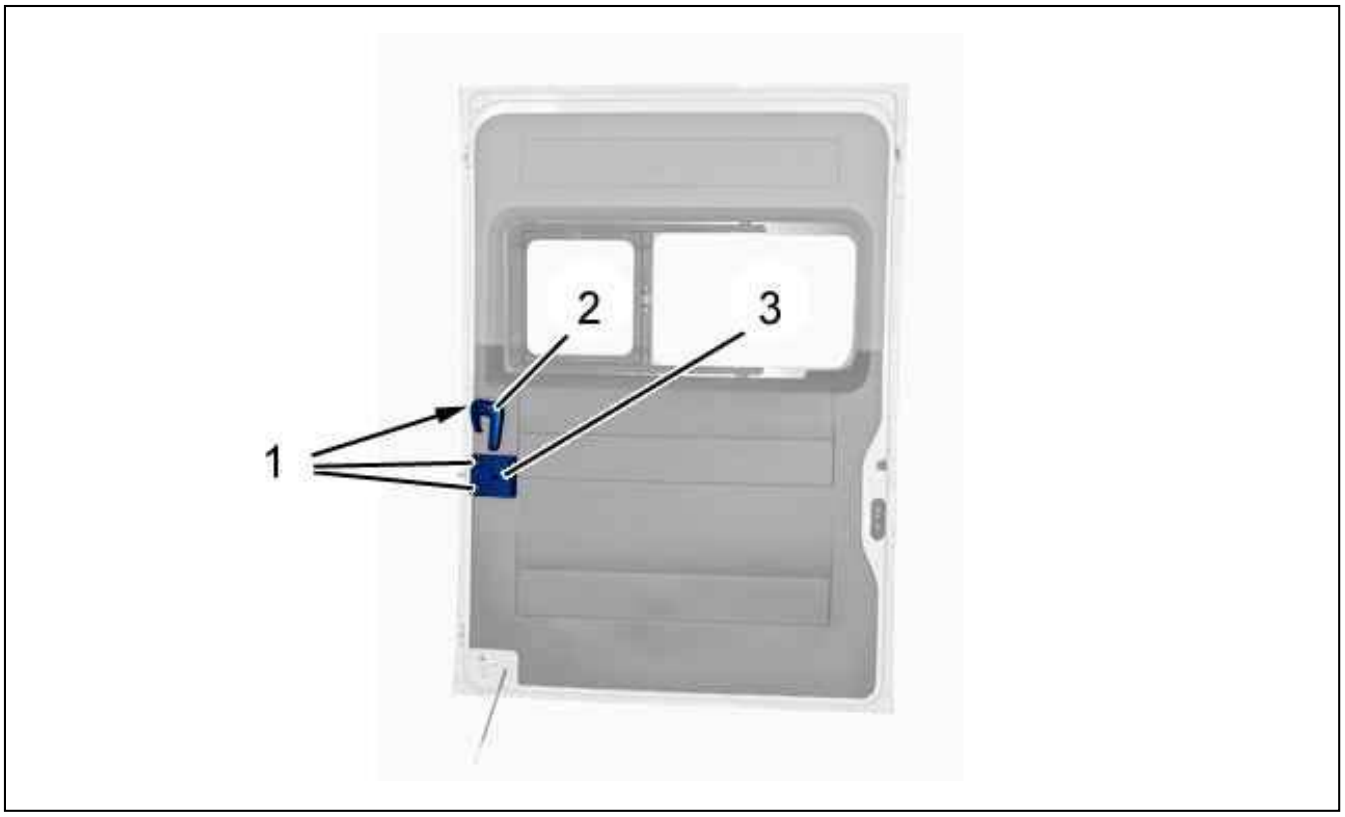

Figure : C4CM0UMD

Remove :

- The bolts (1)
- The handle (2)
- The stop (3)

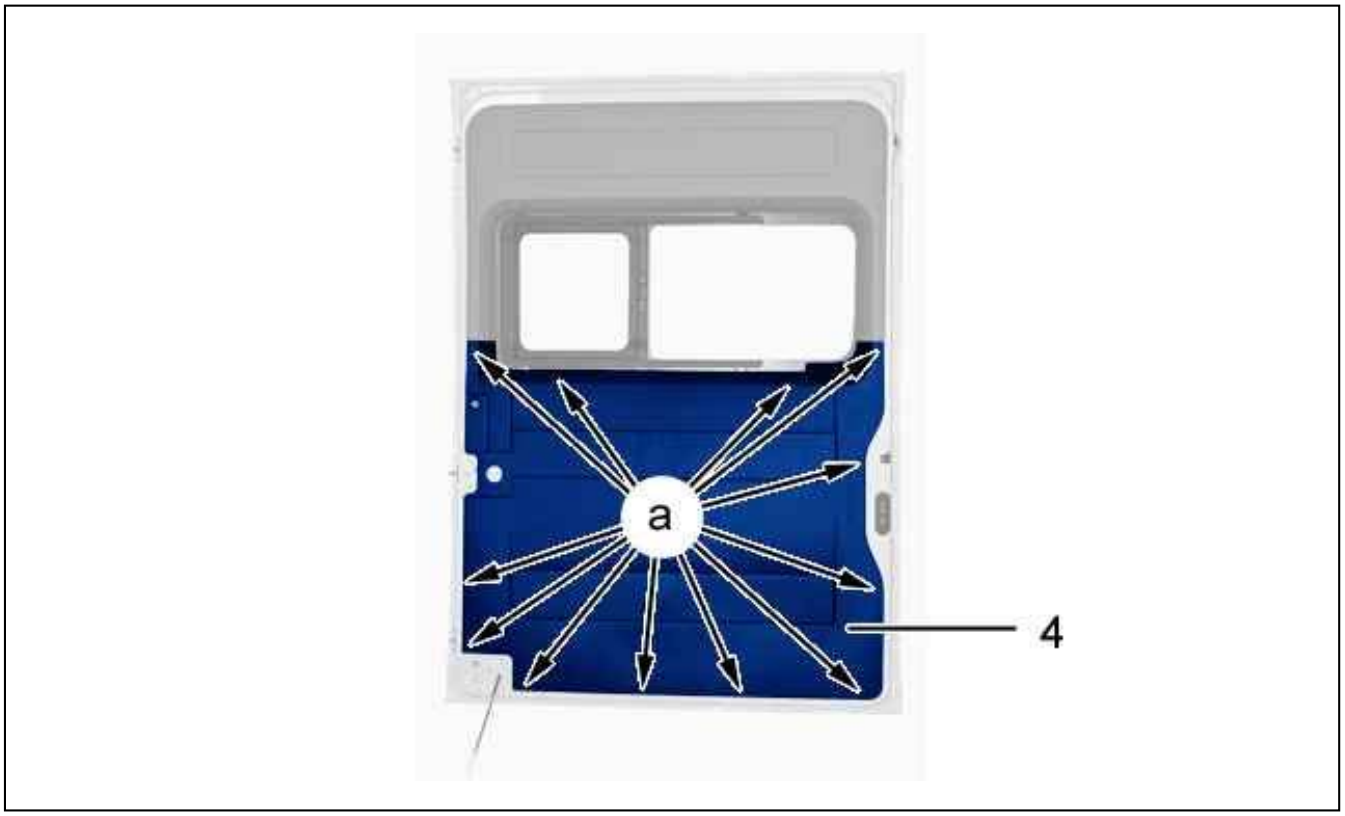

Figure : C4CM0UND

Detach the lower trim (4) (at "a") ; Using tool [1].
Remove the lower lining (4).

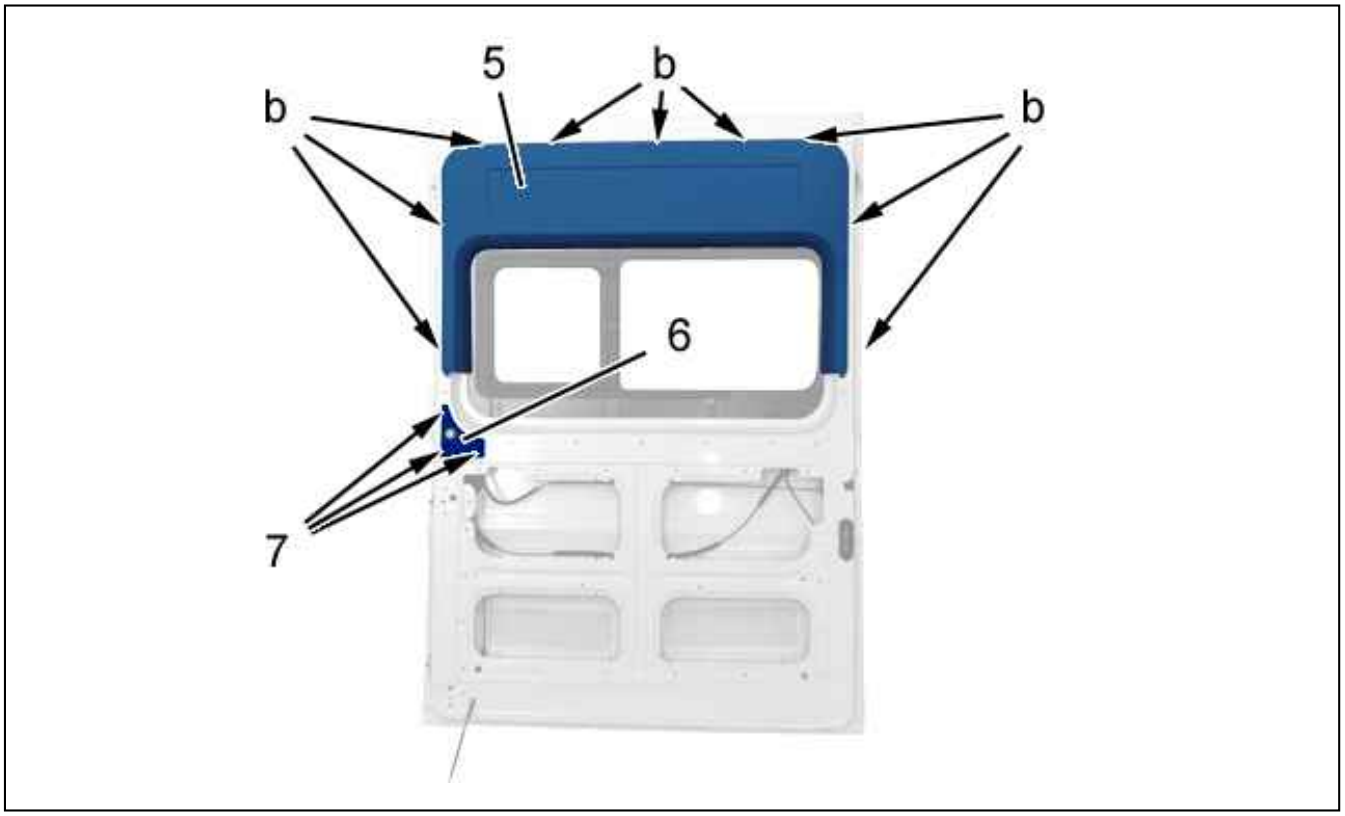

Figure : C4CM0UPD

Unclip upper trim (5) (at "b") ; Using tool [1].
Remove :

- The top trim (5)
- The bolts (7)

Release the handle bracket (6).

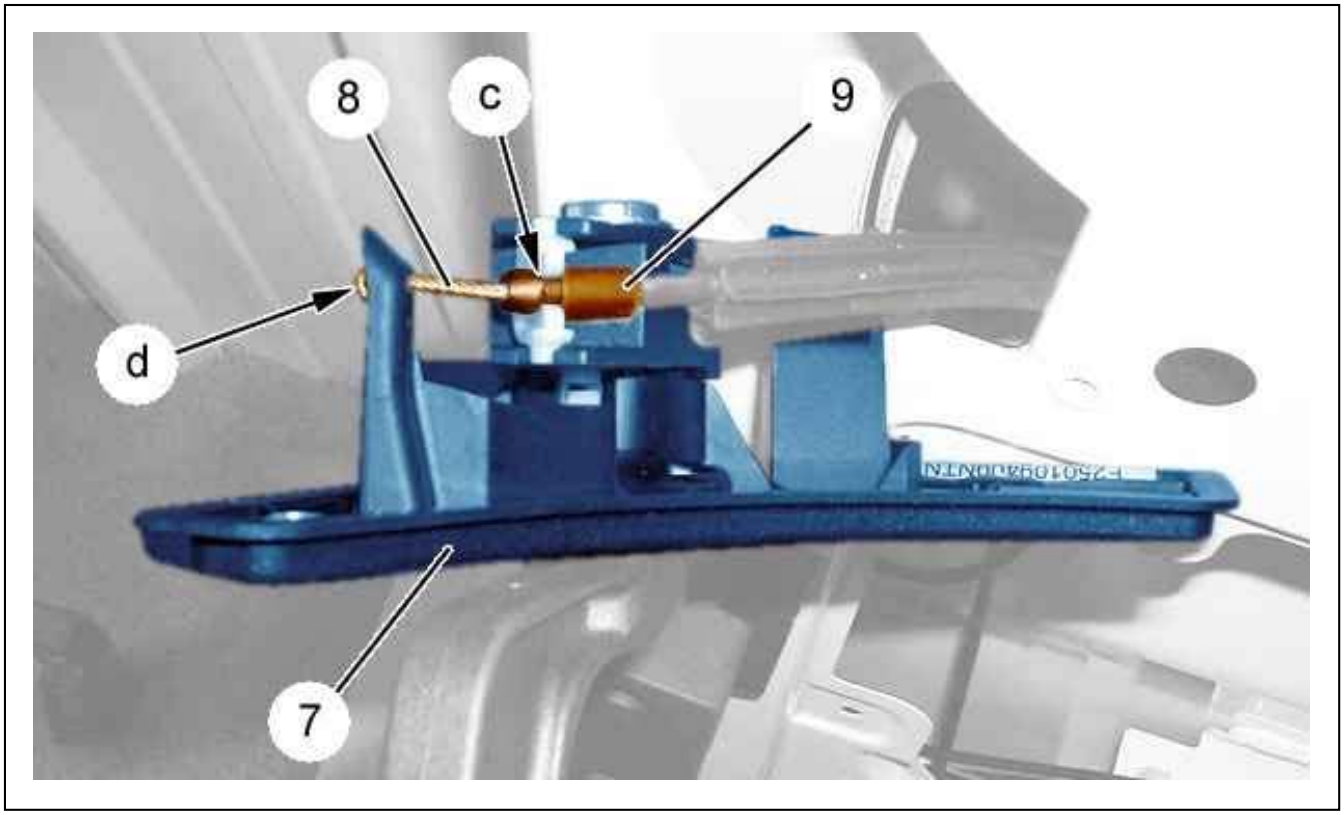

Figure : C5DM02SD

Unclip the cable guide (9) (at "c").
Release the cable (8) (at "d").
Remove the handle support (7).

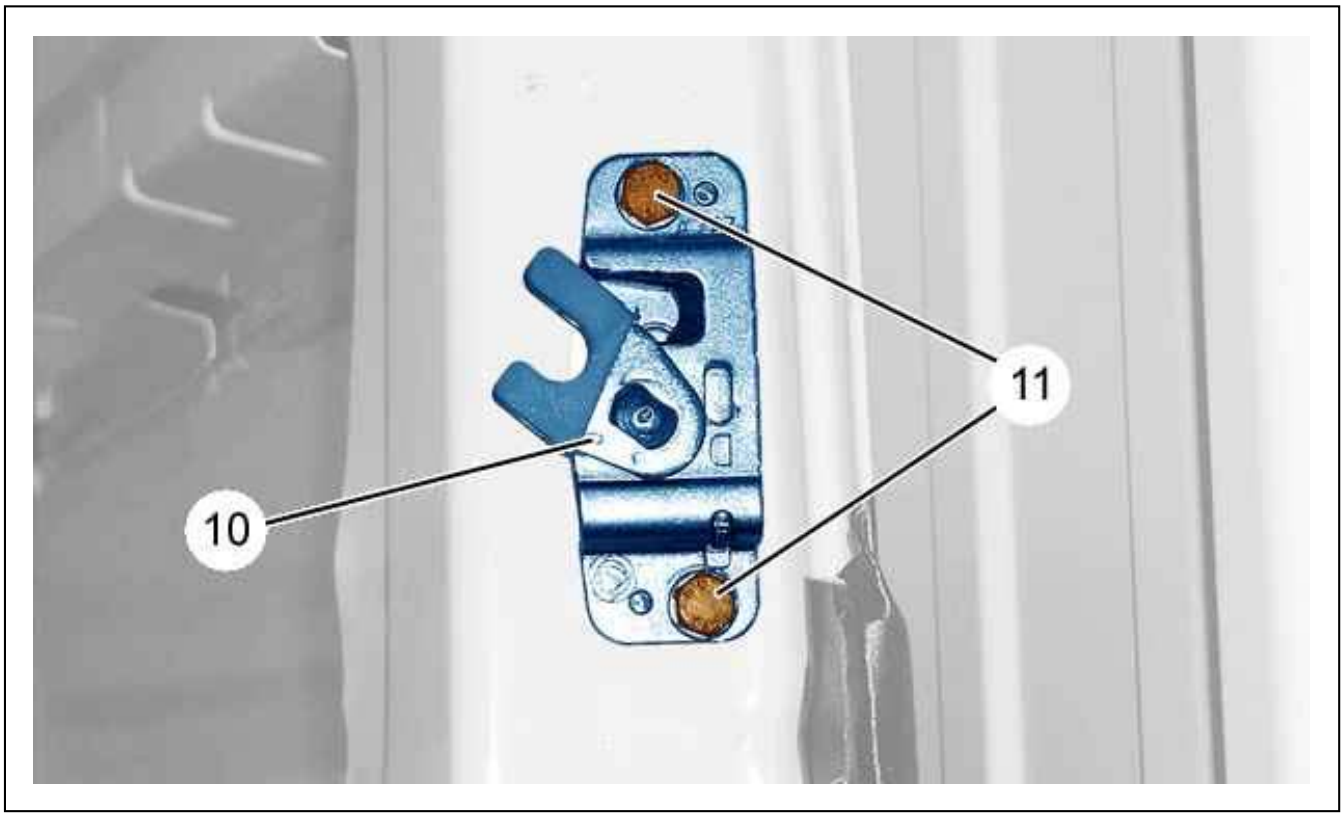

Figure : C5DM02TD

Remove the bolts (11).
Partially detach the upper lock (10).

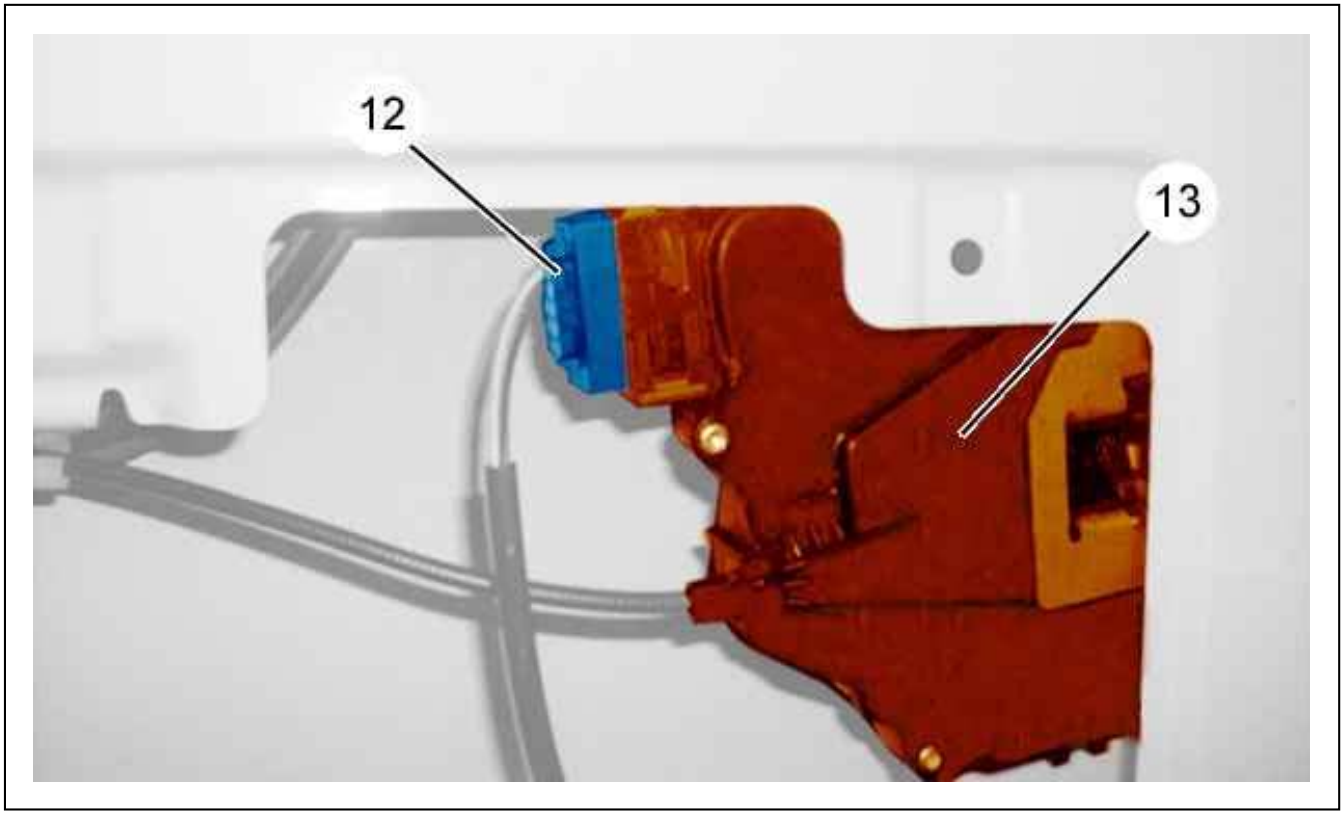

Figure : C5DM02UD

Disconnect the lower lock (13) connector (12).

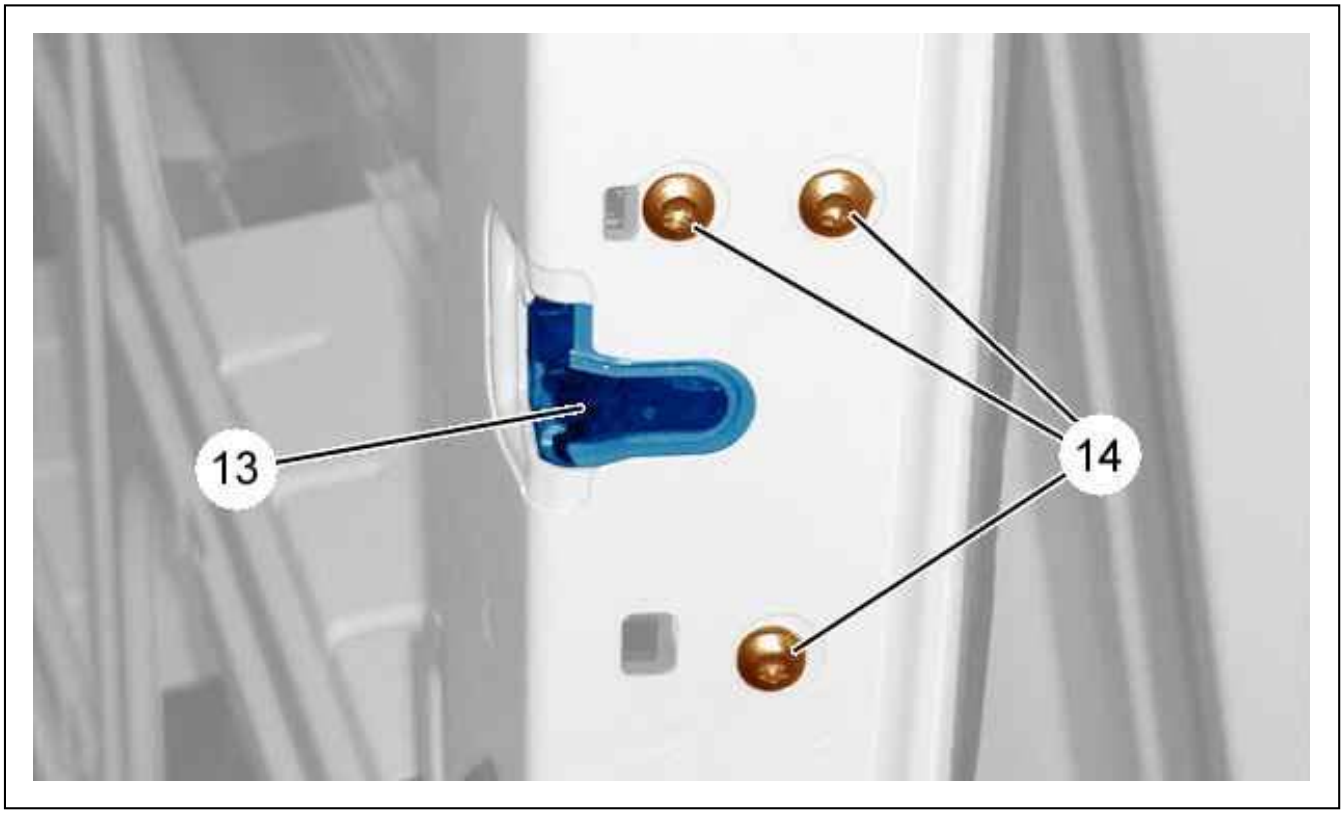

Figure : C5DM02VD

Remove the lower lock (13) bolts (14).
Partially detach the lower lock (13).

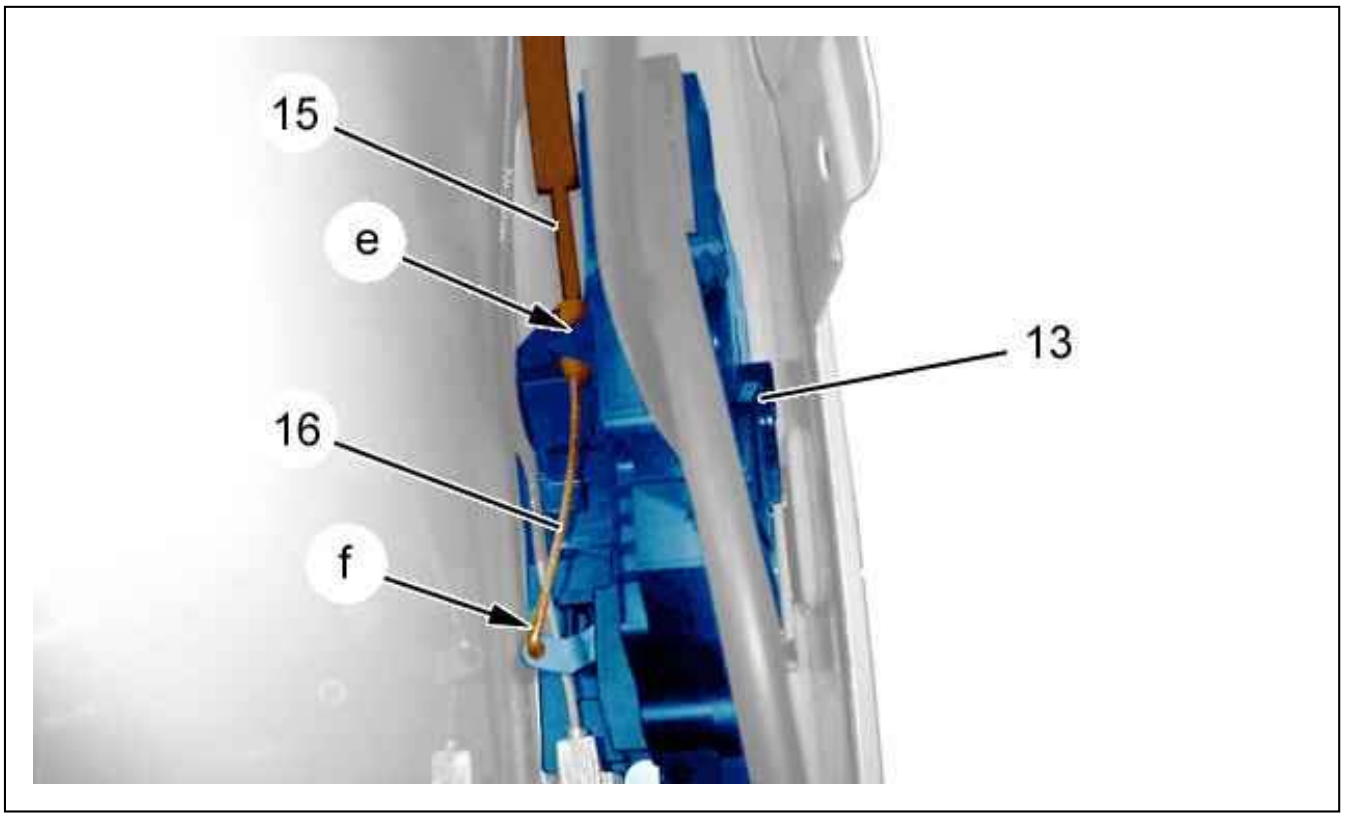

Figure : C5DM02WD

Unclip the cable guide (15) (at "e").
Remove the cable (16) (at "f").
Detach the lower lock (13).
Remove the upper lock (10).

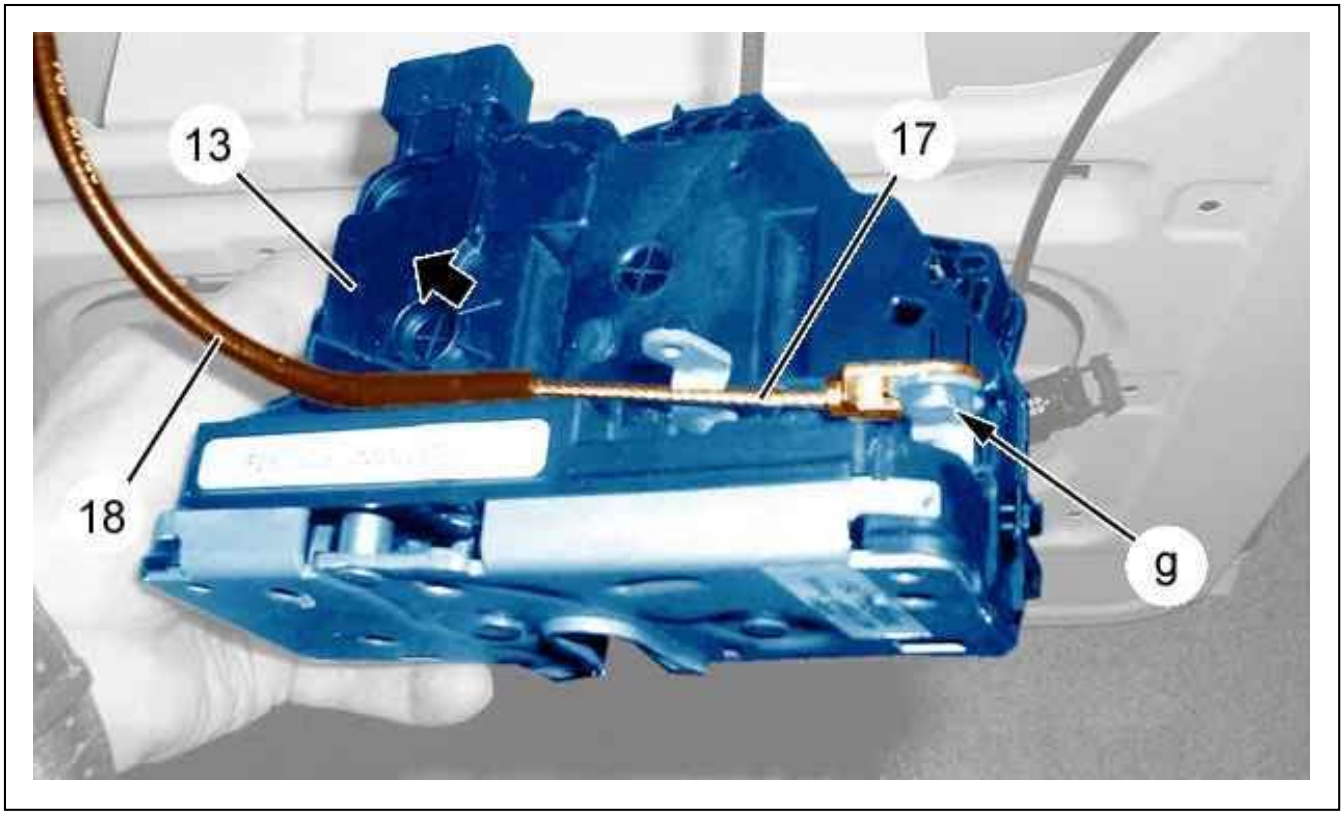

Figure : C5DM02XD

Remove the cable guide (18) (following the arrow).
Unclip the cable (17) (at "g").
Remove the lower lock (13).

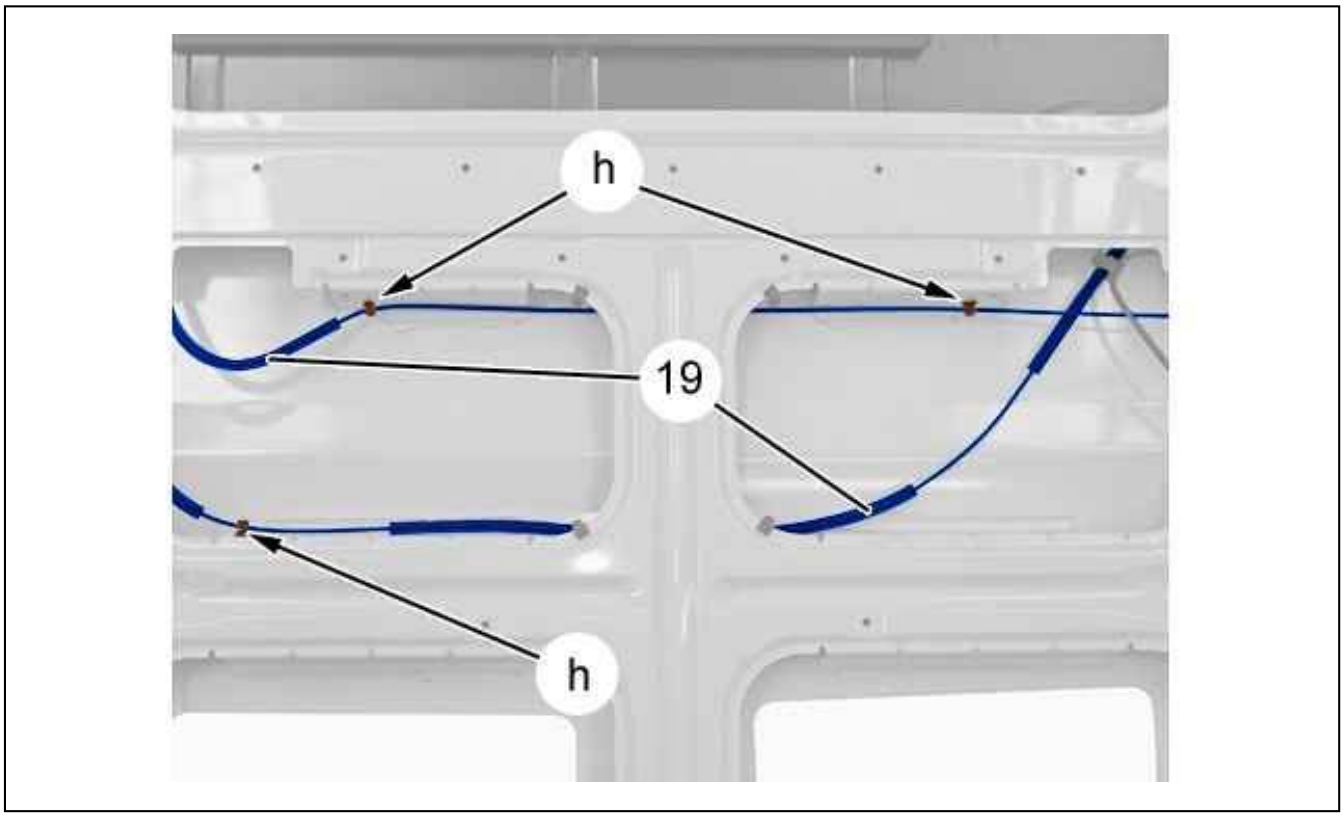

Figure : C4CM0UQD

Unclip the cable sleeves (19) (at "h").

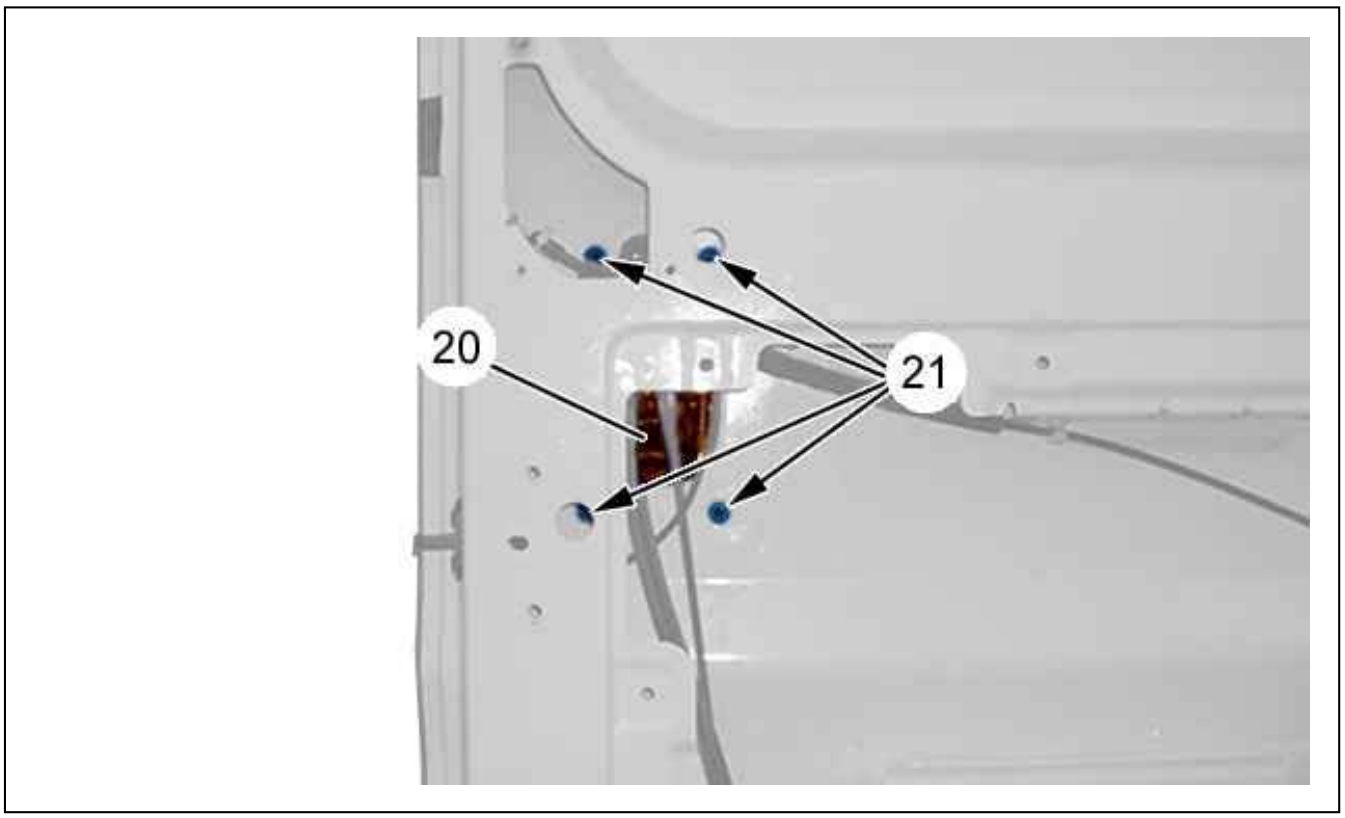

Figure : C4CM0URD

Remove :

- The bolts (21)
- The exterior handle (20) and the cable sleeves

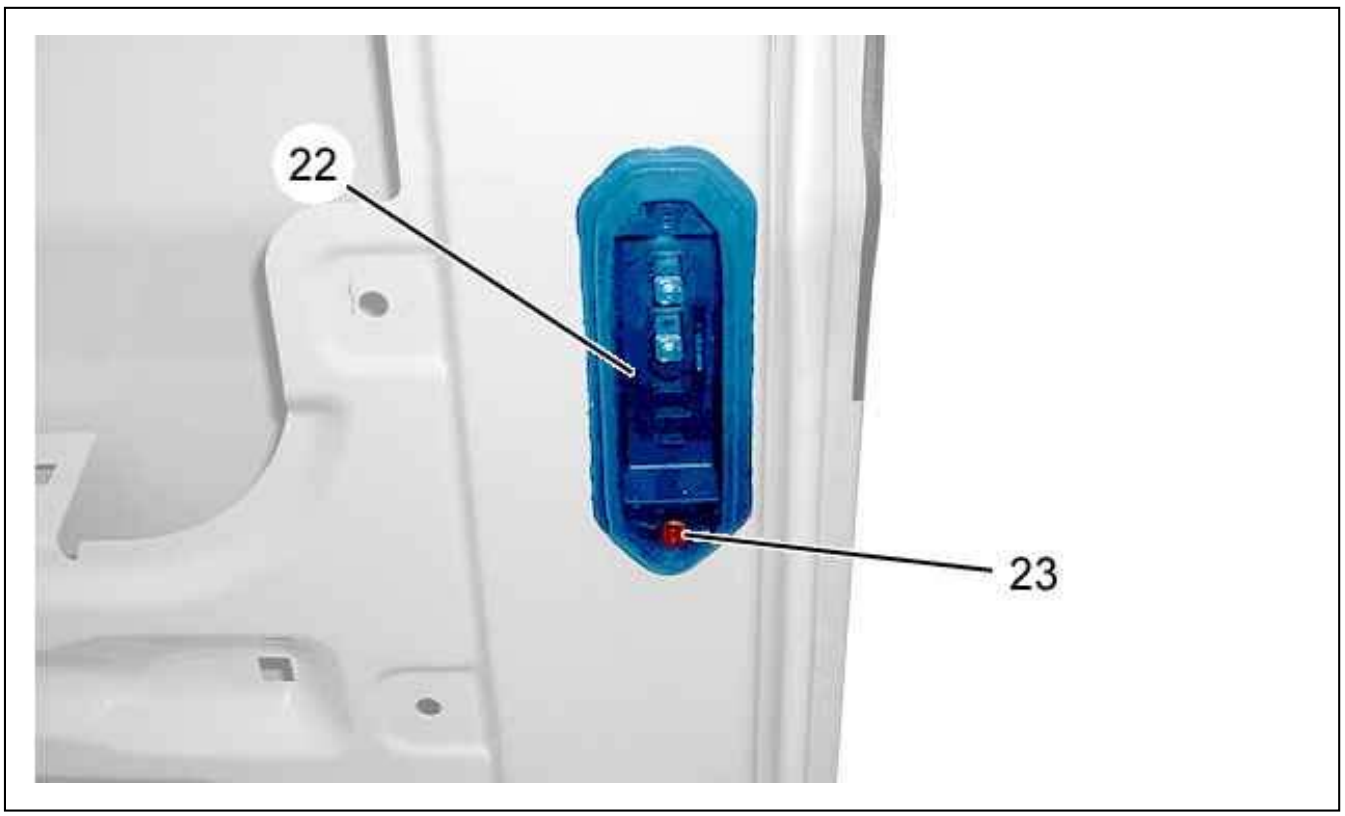

Figure : C4CM0USD

Remove :

- The fixing (23)
- The door switch (22)

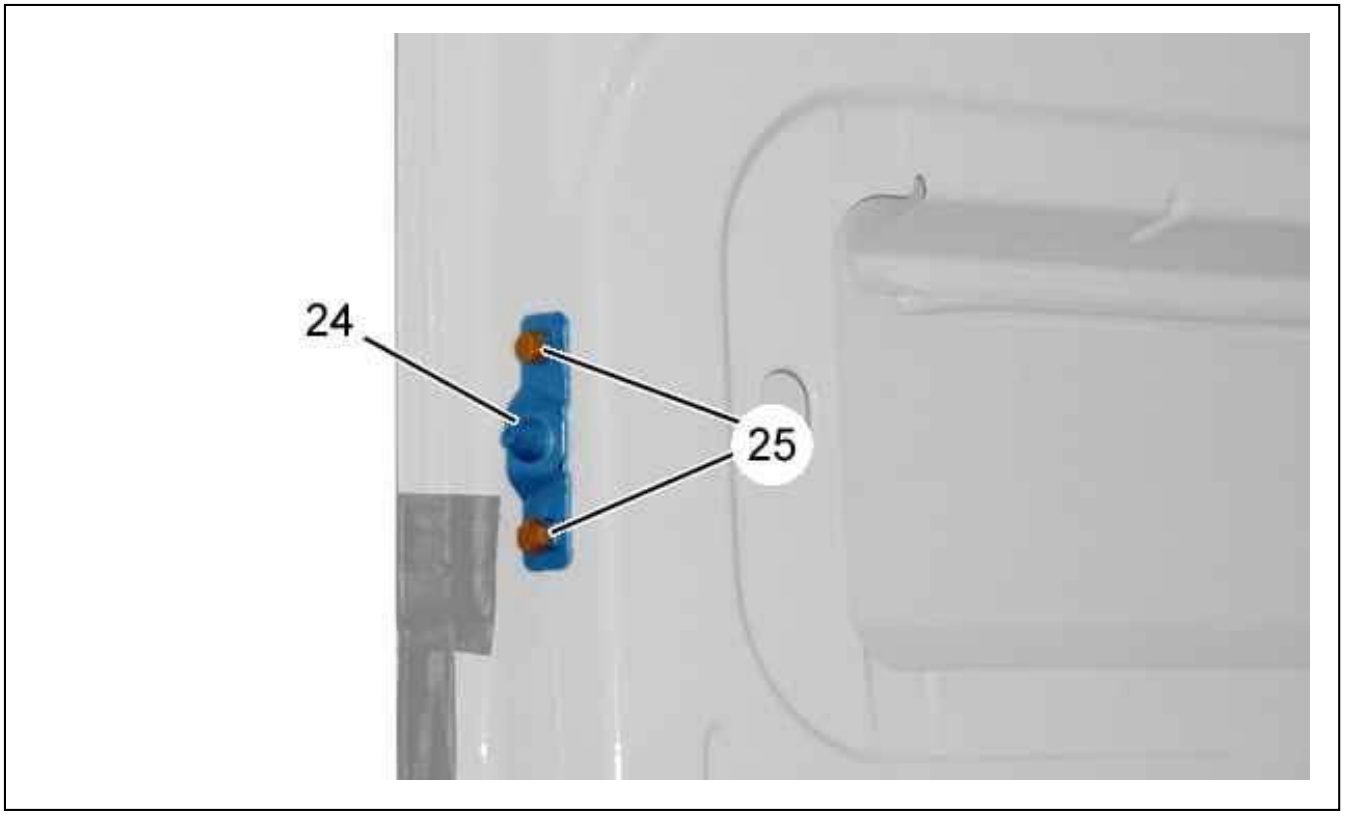

Figure : C4CM0UTD

Remove :

- The bolts (25)
- The upper door guide (24)

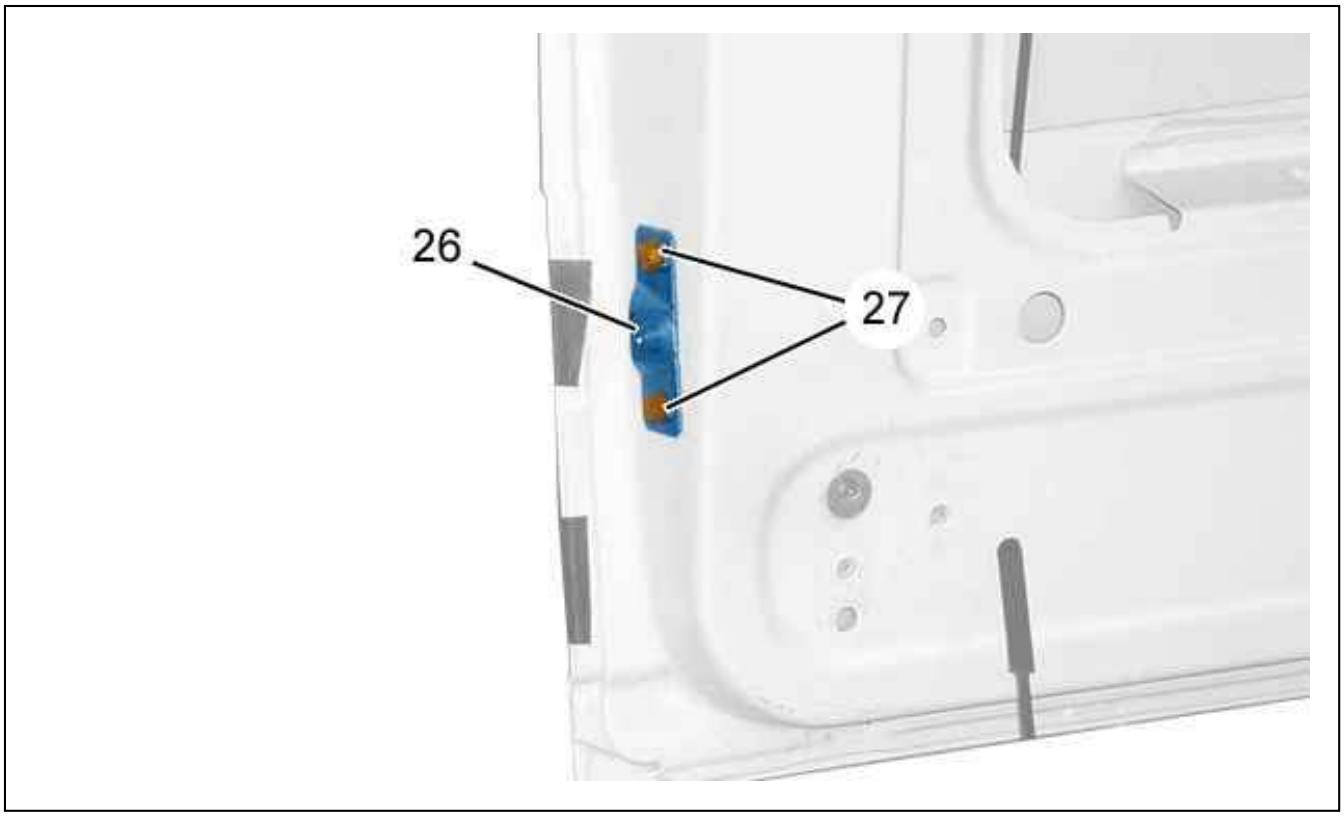

Figure : C4CM0UUD

Remove :

- The bolts (27)
- The lower door guide (26)

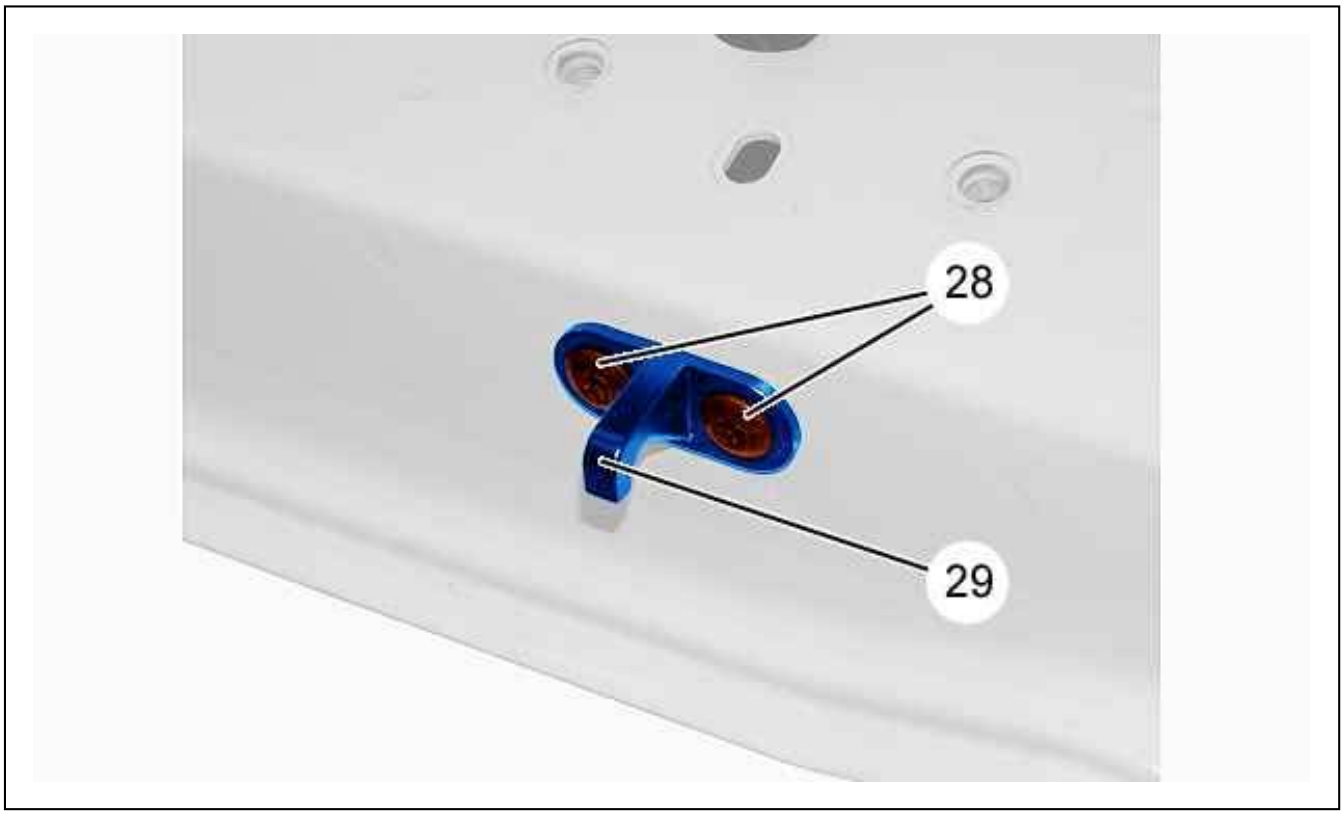

Figure : C4CM0UVD

Remove :

- The bolts (28)
- The central door guide (29)

3. Re-assembling

Carry out the re-trim operations in the reverse order to the stripping operations.
Tighten :

- The bolts (1), (8) and (21) to 1 m.daN
- The bolts (11), (14), (25) and (27) to 2 m.daN

Check all the equipment works.

REMOVING - REFITTING : FRONT SIDE DOOR FIXED WINDOW

ESSENTIAL : Observe the safety and cleanliness recommendations.

1. Recommended tools

Presentation : Glazing consumables (See the corresponding operation).

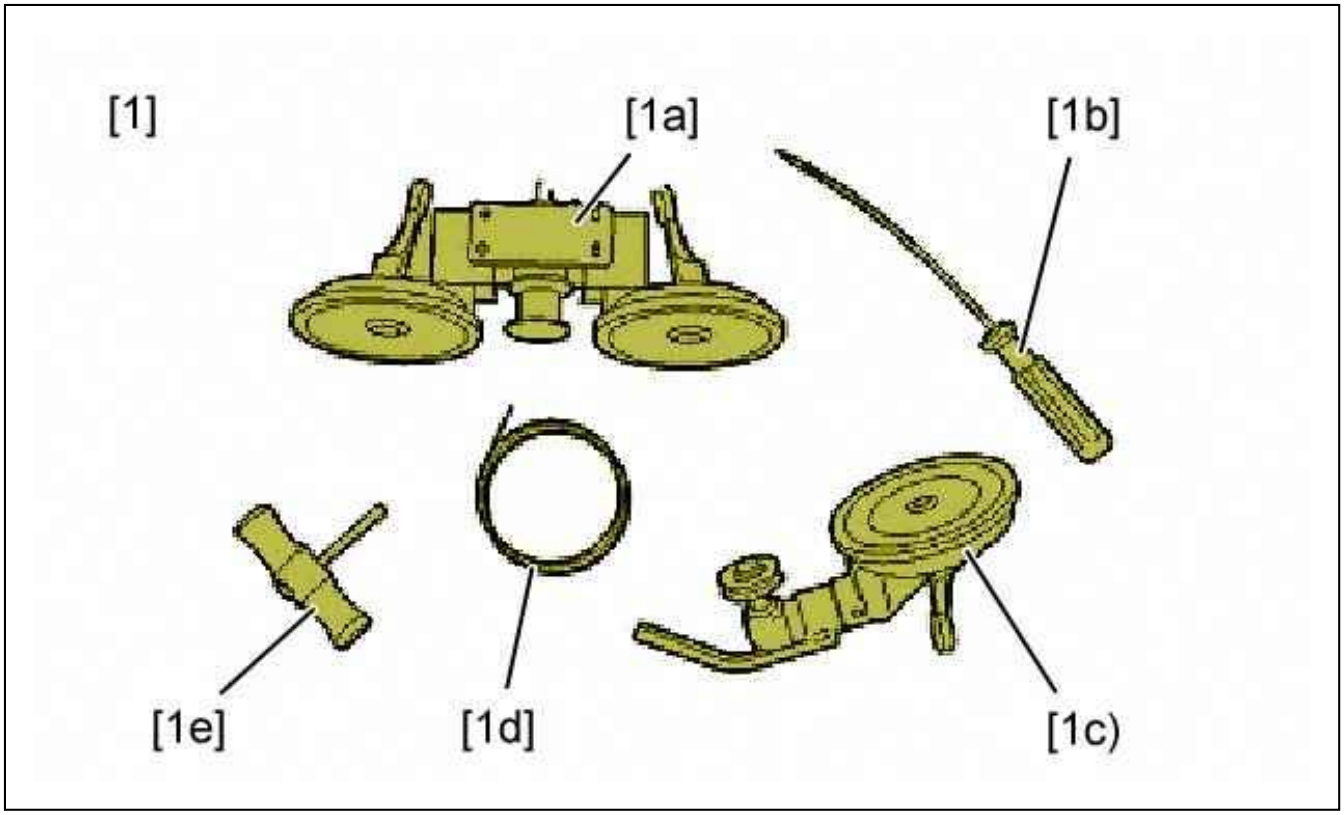

Figure : E5AP2ZQD

[1] Bonded windows removal kit (-).1354.
Contents of kit :

- [1a] Inertia device with roller
- [1b] Awl
- [1c] Guiding roller
- [1d] Square section cutting wire
- [1e] handle

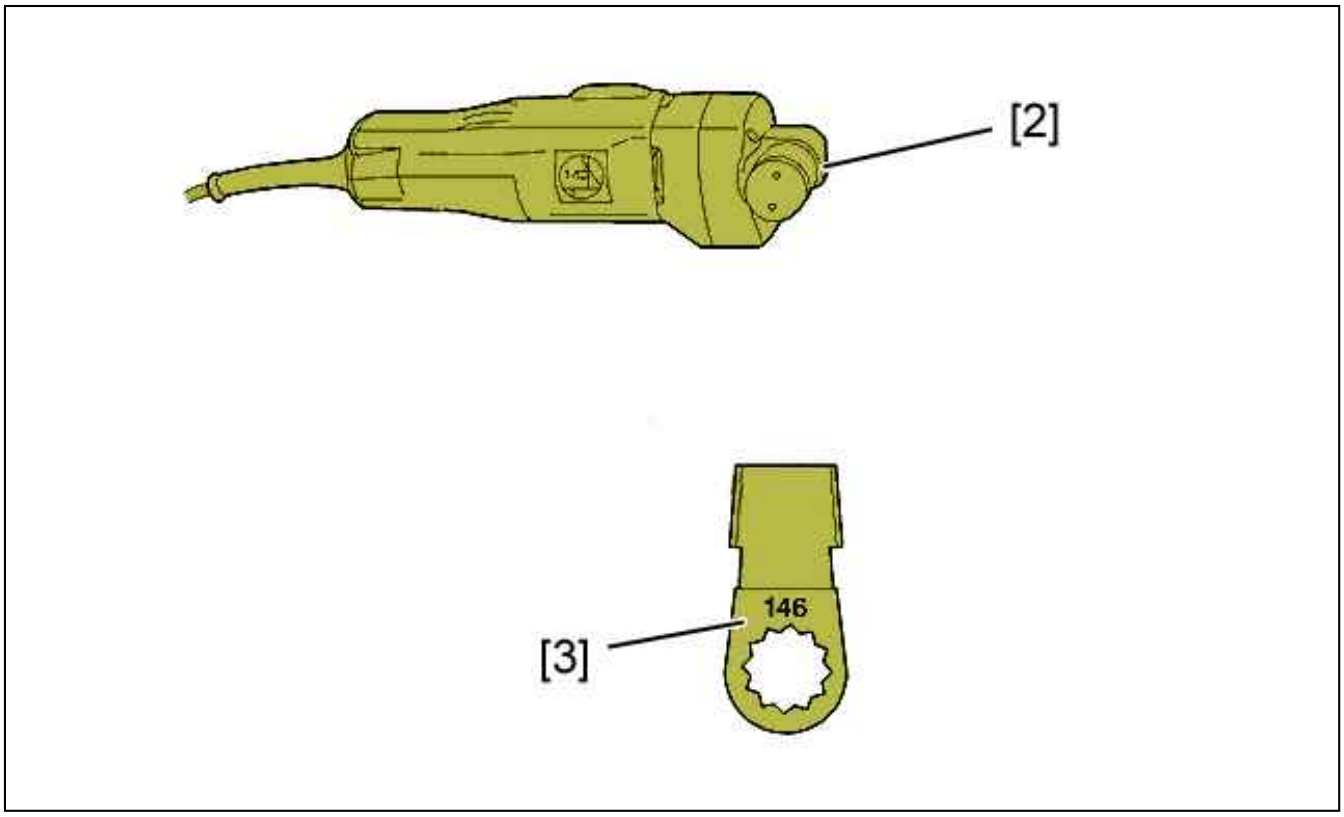

Figure : E5AP2ZRD

[2] electric knife.
[3] Shovel blade N°146.

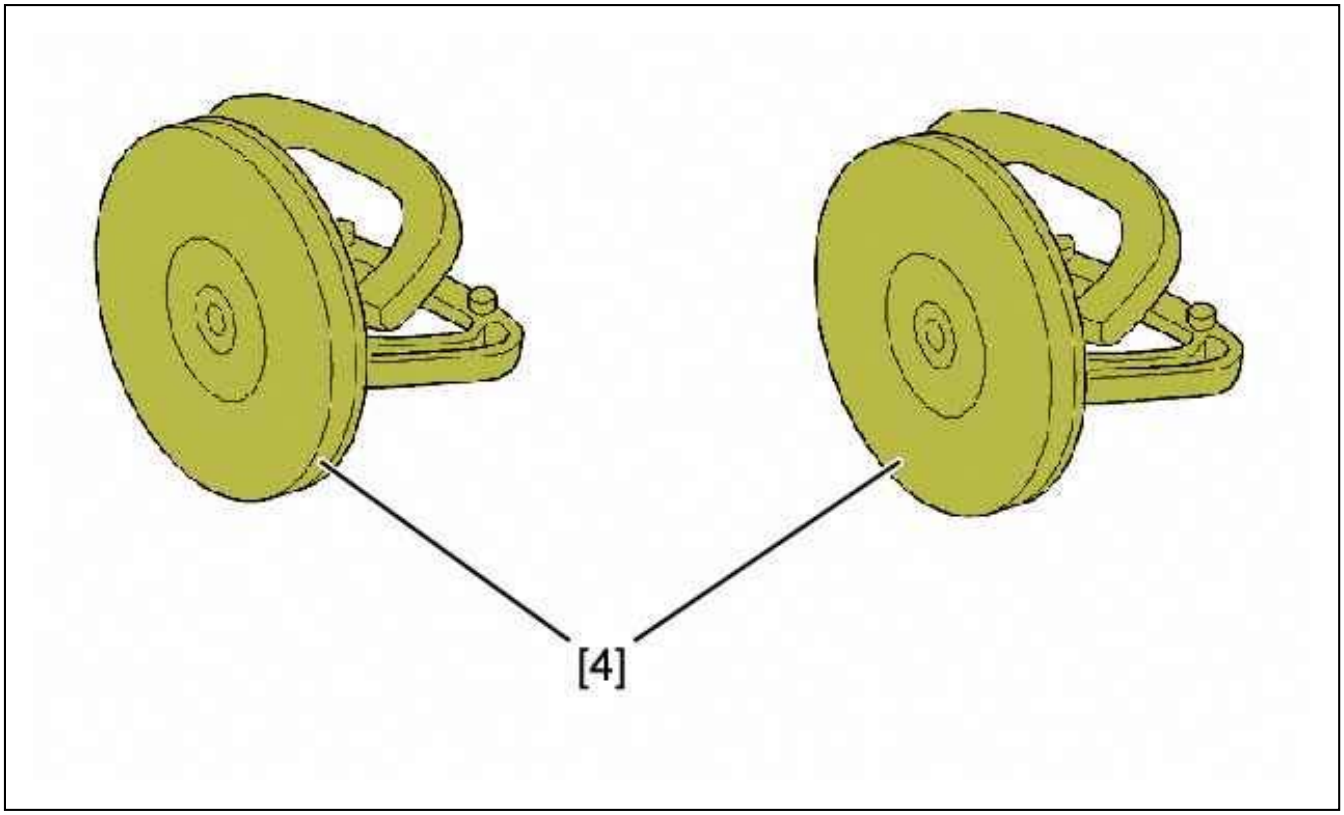

Figure : E5AP2ZSD

[4] suction cups .

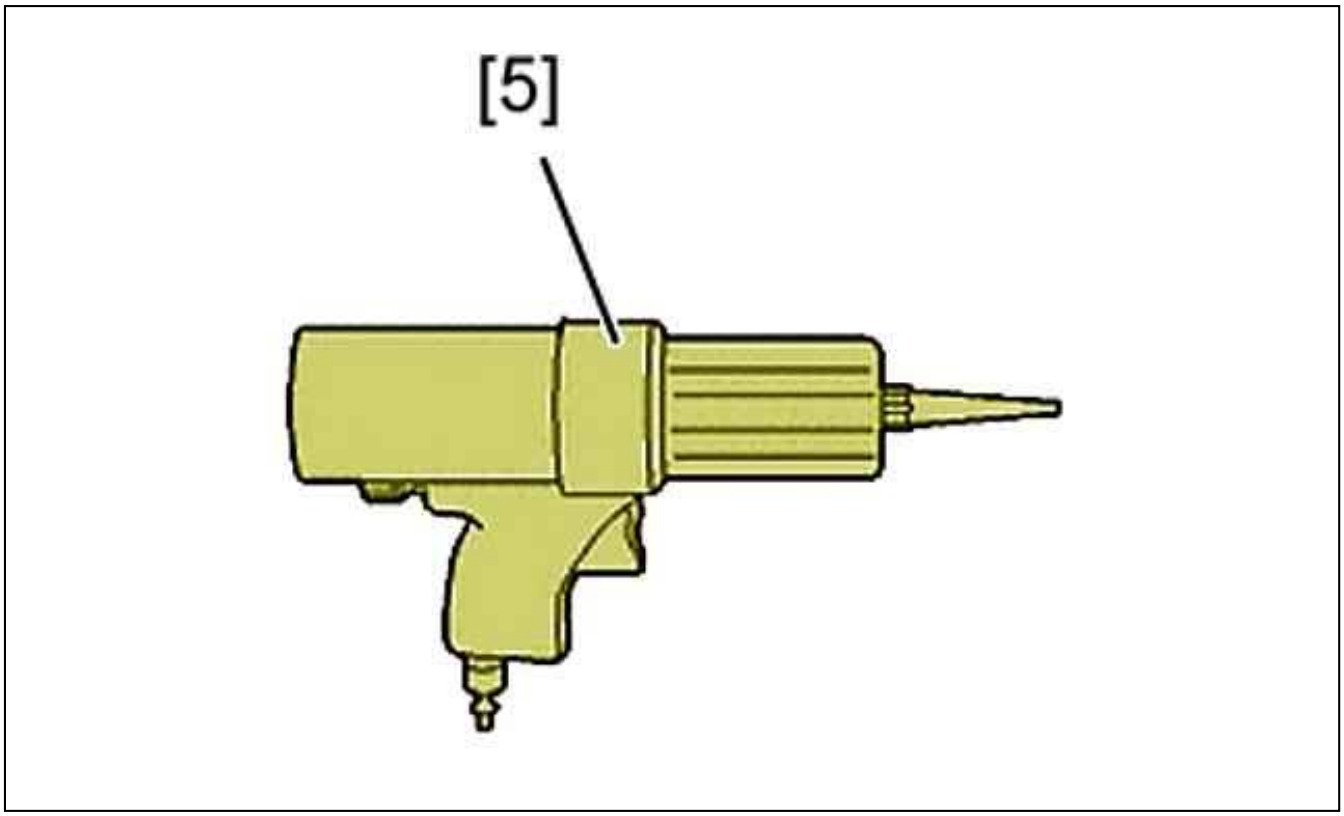

Figure : E5AP2YED

[5] Pneumatic gun (For one part cartridge).

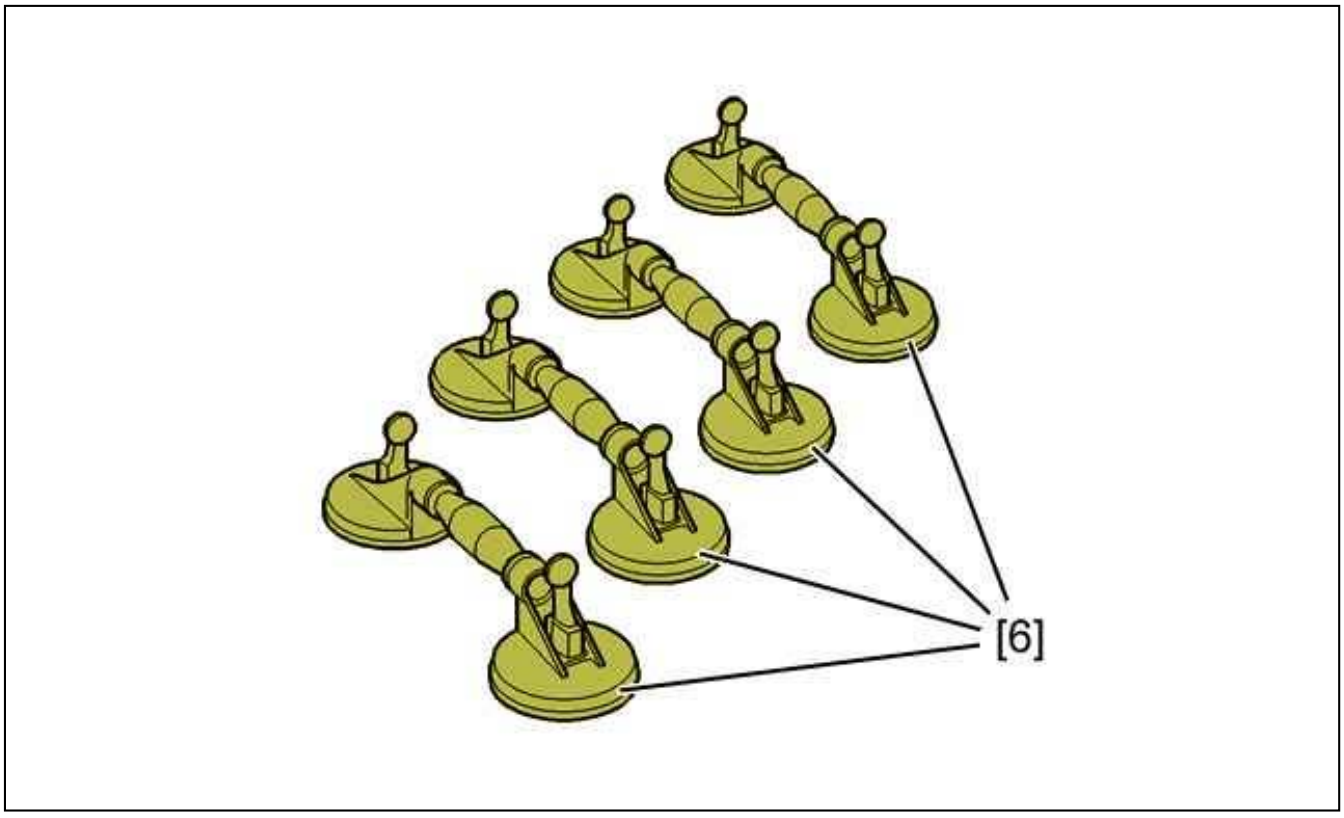

Figure : E5AP2ZTD

[6] Jointed suction caps (Reference P.R 9776.Y0).

2. Removing

Remove the exterior rear view mirror (See the corresponding operation).

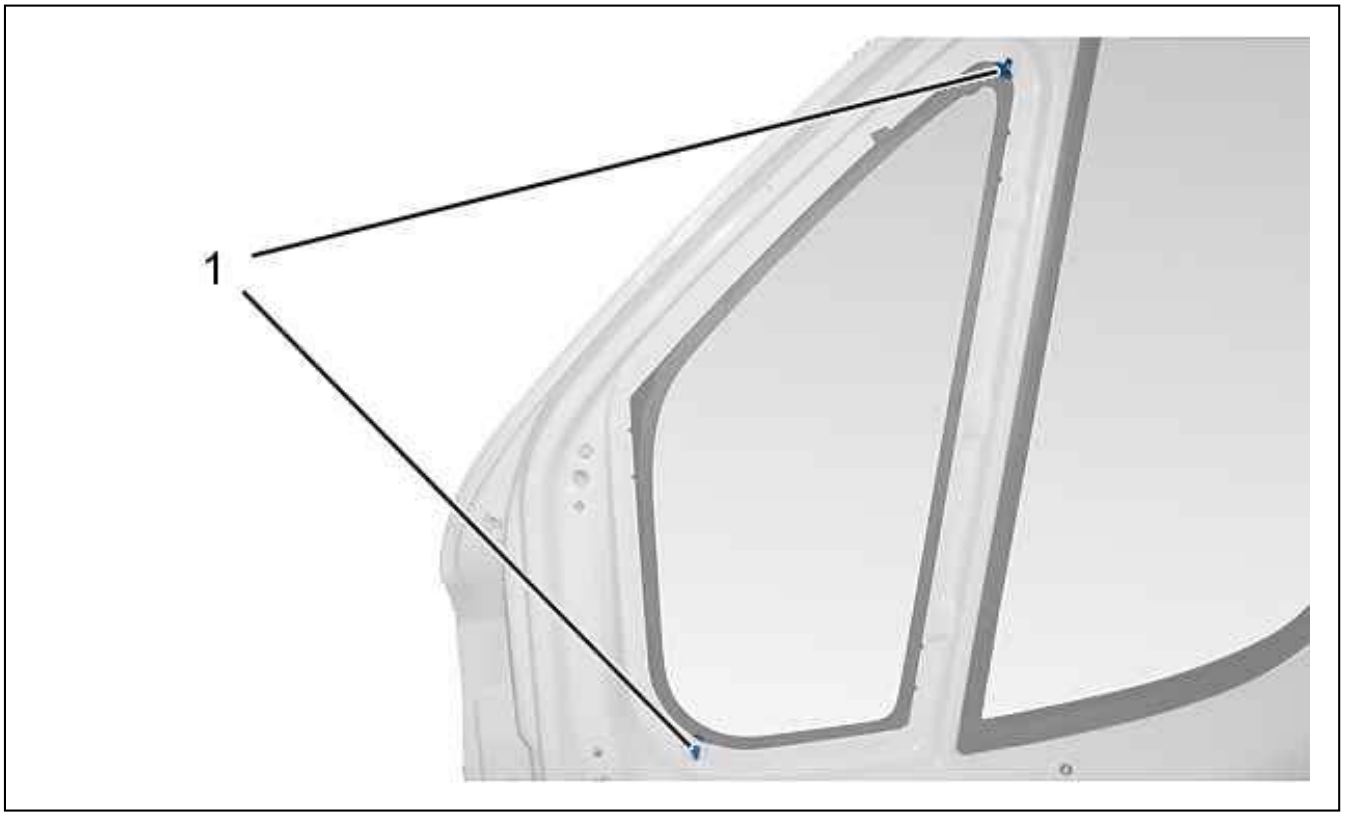

Figure : C5CP09LD

Remove the guide fixings (1).

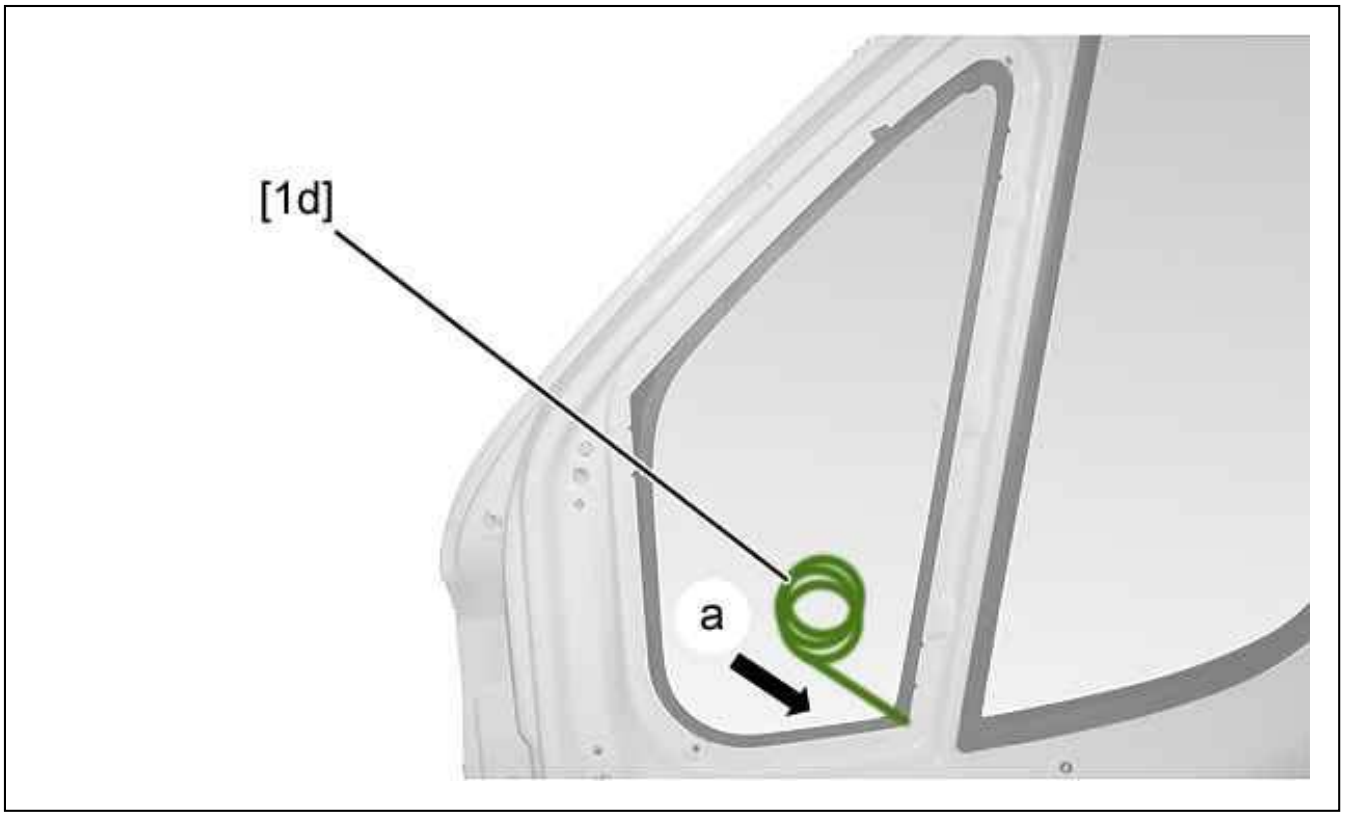

Figure : C5CP09MD

Pass the awl [1b] through the bead of adhesive, from the inside towards the outside (At "a").
Thread the cutting wire [1d] into the awl [1b] and pass it towards the inside.
Leave a sufficient length to permit fixing of the handles [1e].
Install the handles [1e] at each end of the cutting wire [1d].



Figure : C5CP09ND

Two people are required to perform the following operation.
Cut the sealing adhesive (as "b").

N.B. : At the slightest resistance of the wire on cutting, slacken it and help it to pass the obstacle (support shims excessively thick bead of adhesive or panel junction).

Remove the quarterlight (2) ; Using tool [4].

3. Refitting

3.1. Preparation of the flange and fixed window glass

To the electric knife [2] fit the blade [3] no. 146.
Shave the beads of adhesive on the fixed window glass and the flange.
Touch up with anti-corrosion product.
Degrease the flange using the product selected from the adhesive kit.
Allow to dry for 10 mn.

3.2. Applying the adhesive



Figure : C5CP09PD

Place the mastic mixer assembly into the gun [5].
Take the nozzle supplied in the glueing kit.
Cut the nozzle to 8,0 mm dia. at 12 mm from the tip.
1st case : The fixed window (Reused).
There is no need to apply primer.
Remove any impurities on the shaved seal ; Using a blow gun .
2nd case : The fixed window (New).
Degrease the surround of the glass with the products chosen from the bonding kit.

The glass (2) is supplied pre-coated with primer .
Further primer must be applied following the line of the primer applied during manufacture (as "c") (Allow to dry for 10 mn).

ESSENTIAL : No more than 8 minutes must elapse between applying the mastic and positioning the glass (For the quick setting bonding mastics).

Apply the bead of adhesive to the centre of the trace of primer (as "c").

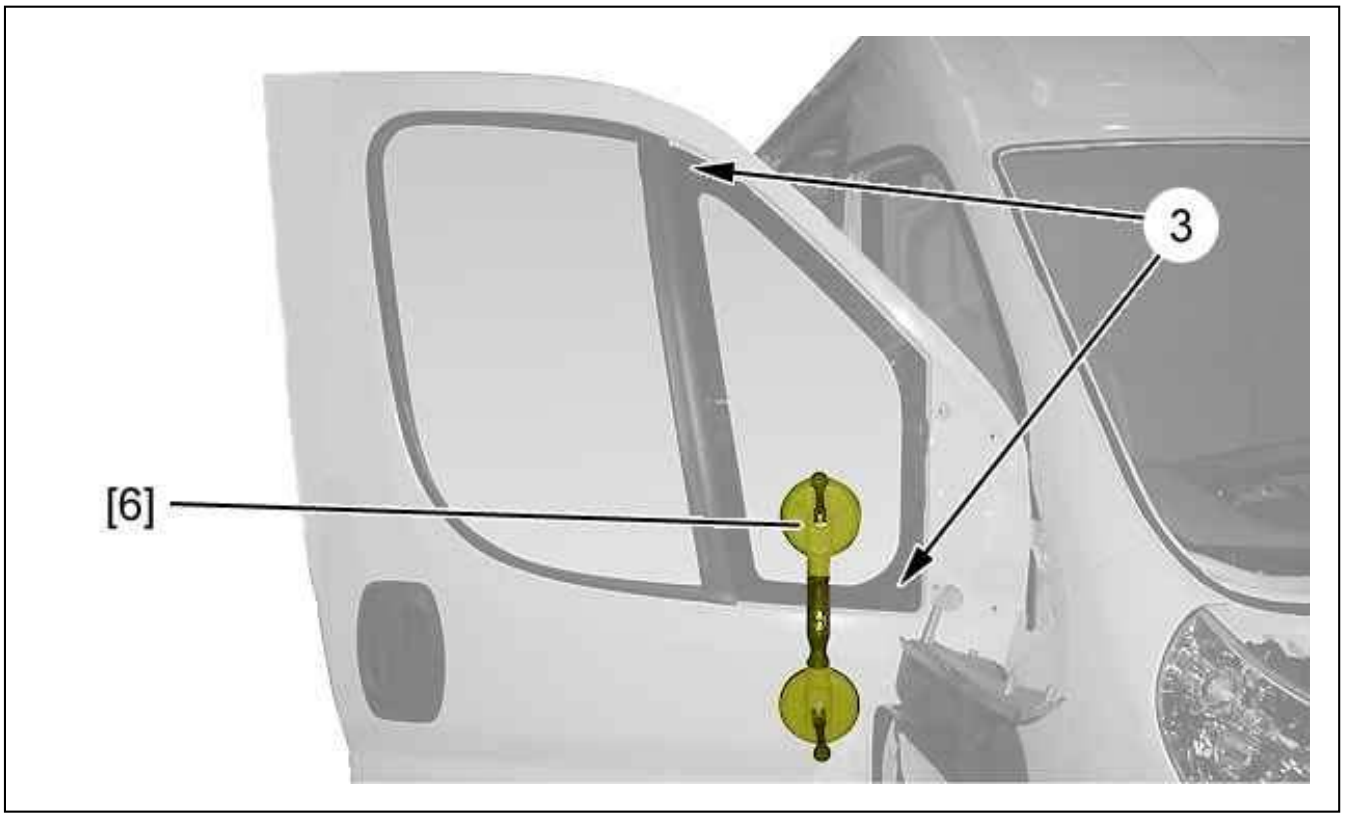

Figure : C5CP09QD

Position the fixed window glass ; Using the guides (3).
Refit the guide fixings (1) to keep the glass in contact.
Retain the glass in position ; Using tool [6].
Allow to cure for 30 minutes before handling.
Check : Check the sealing of the quarterlight by running water over it.
Proceed in the reverse order to removal.

REMOVING - REFITTING : FRONT WINDOW MECHANISM

1. Removing

Strip the front door (see corresponding procedure).

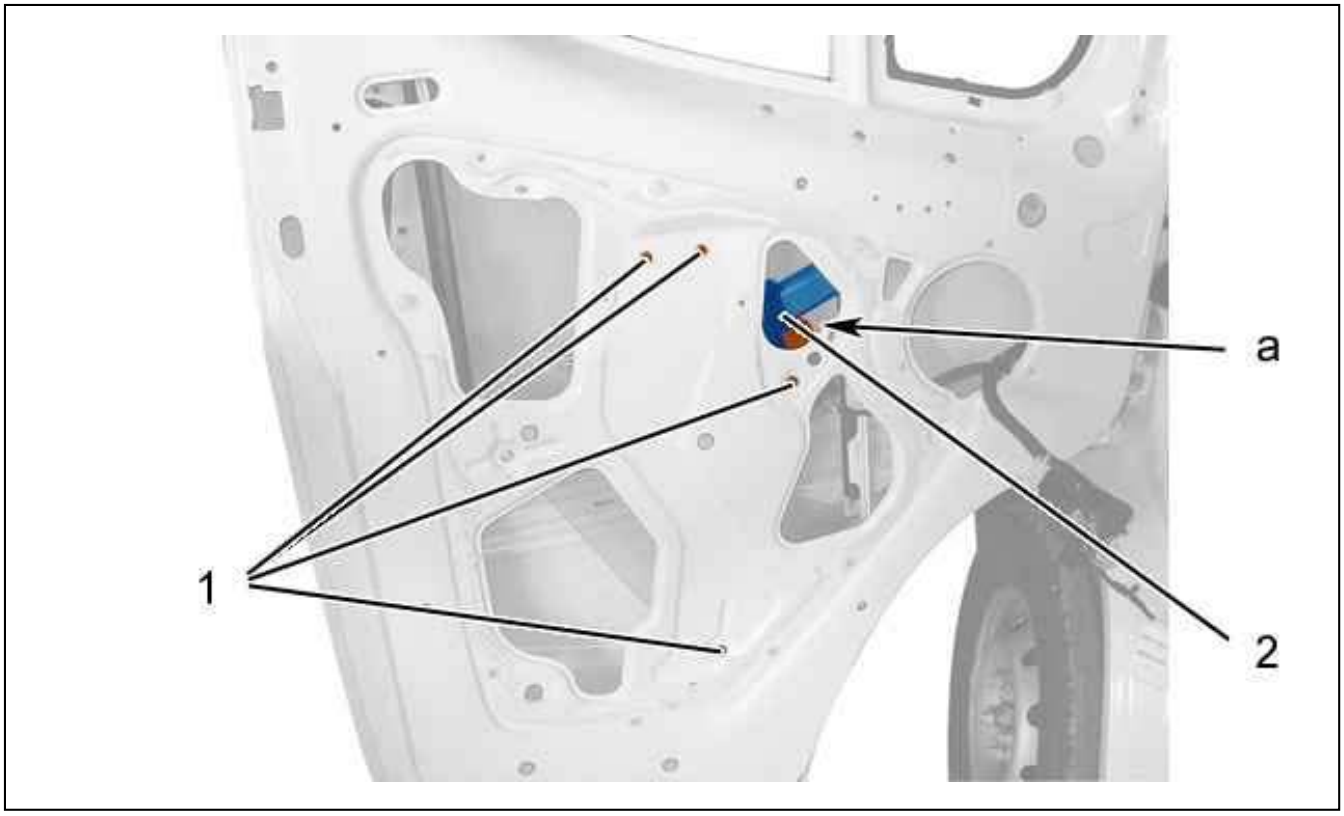

Figure : C4CP1TUD

Remove the bolts (1).
Disconnect the connector "a".
Remove the front window mechanism (2).

2. Refitting

Proceed in the reverse order to removal.
Check the operation of the window.

REMOVING - REFITTING : SLIDING SIDE DOOR RAIL

ESSENTIAL : Observe the safety and cleanliness recommendations .

1. Removing

Perform the following operations :

- Switch off the ignition
- Wait 3 minutes before disconnecting the battery
- Disconnect the ancillaries battery

Remove :

- The sliding side door
- The top trim (/) (Tail panel)

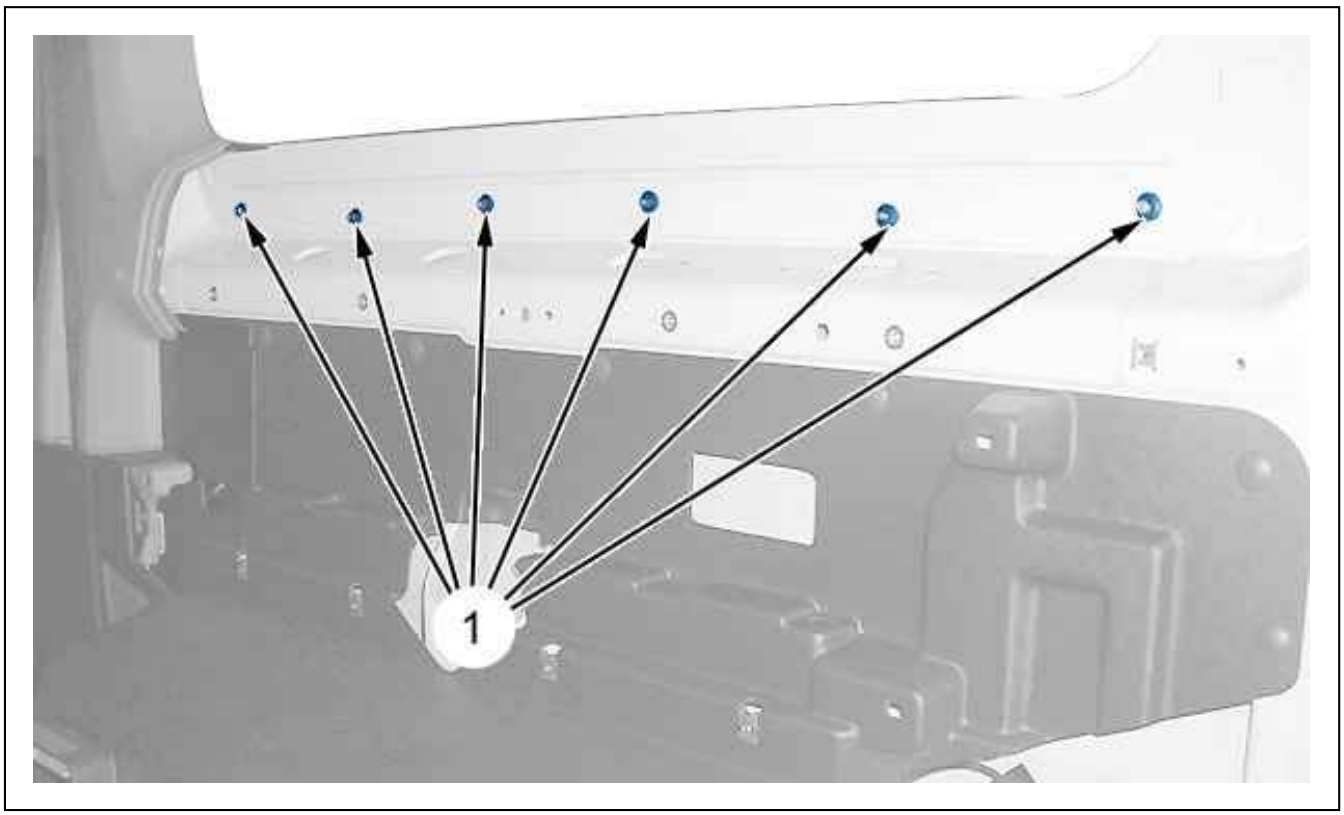

Figure : C5DM02RD

Remove the nuts (1).

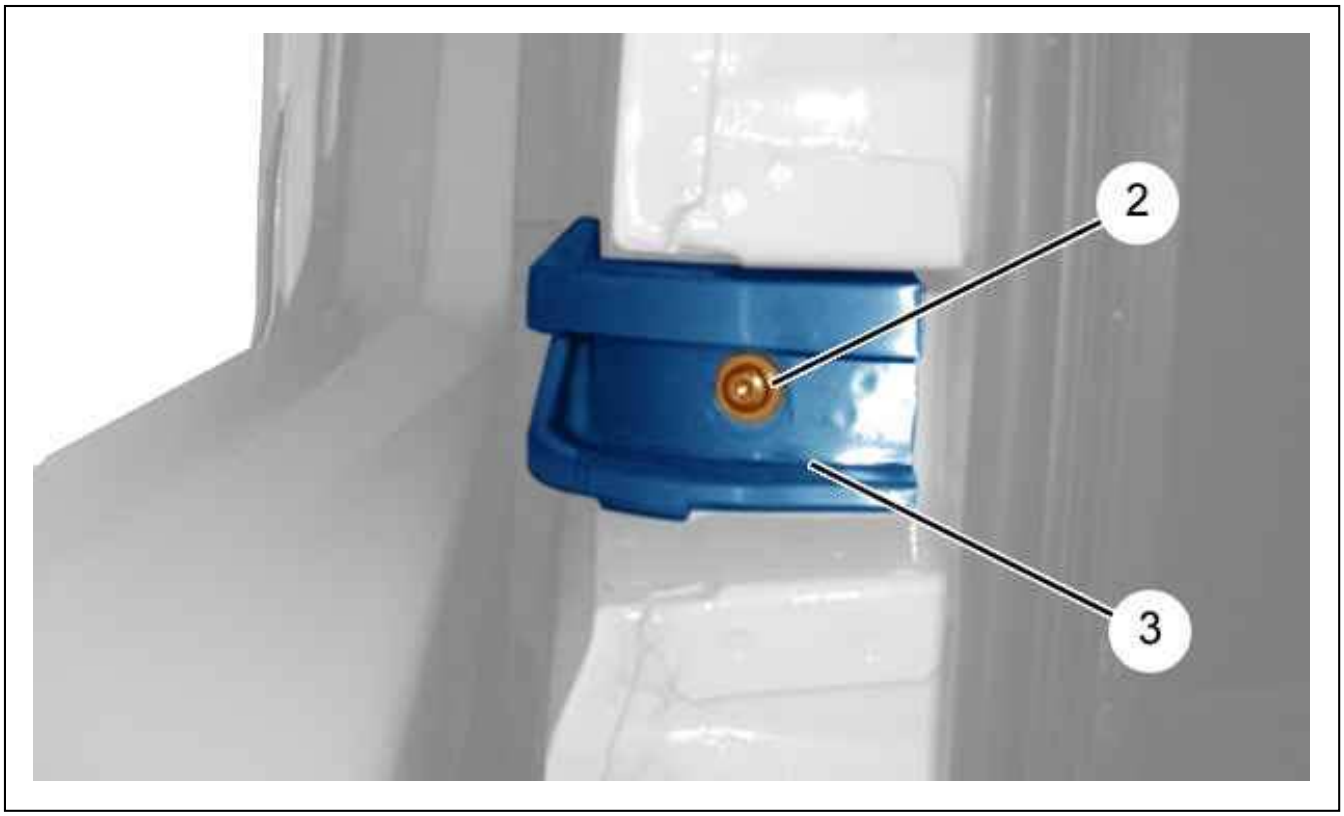

Figure : C4CM0UAD

Open the sliding side door.
Remove :

- The (2) bolt
- The rail (3)

2. Refitting

Proceed in the reverse order to removal.
Tighten :

- The nuts (1) to 2,4 m.daN
- The screw (2) to 1 m.daN

CAUTION : Perform the operations that are required following a reconnection of the ancillaries battery.

Reconnect the ancillaries battery.
Check the electrical operation of the equipment.

REMOVING - REFITTING : REAR SEAT FRAME (CREW CAB)

ESSENTIAL : Observe the safety and cleanliness recommendations .

1. Recommended tools

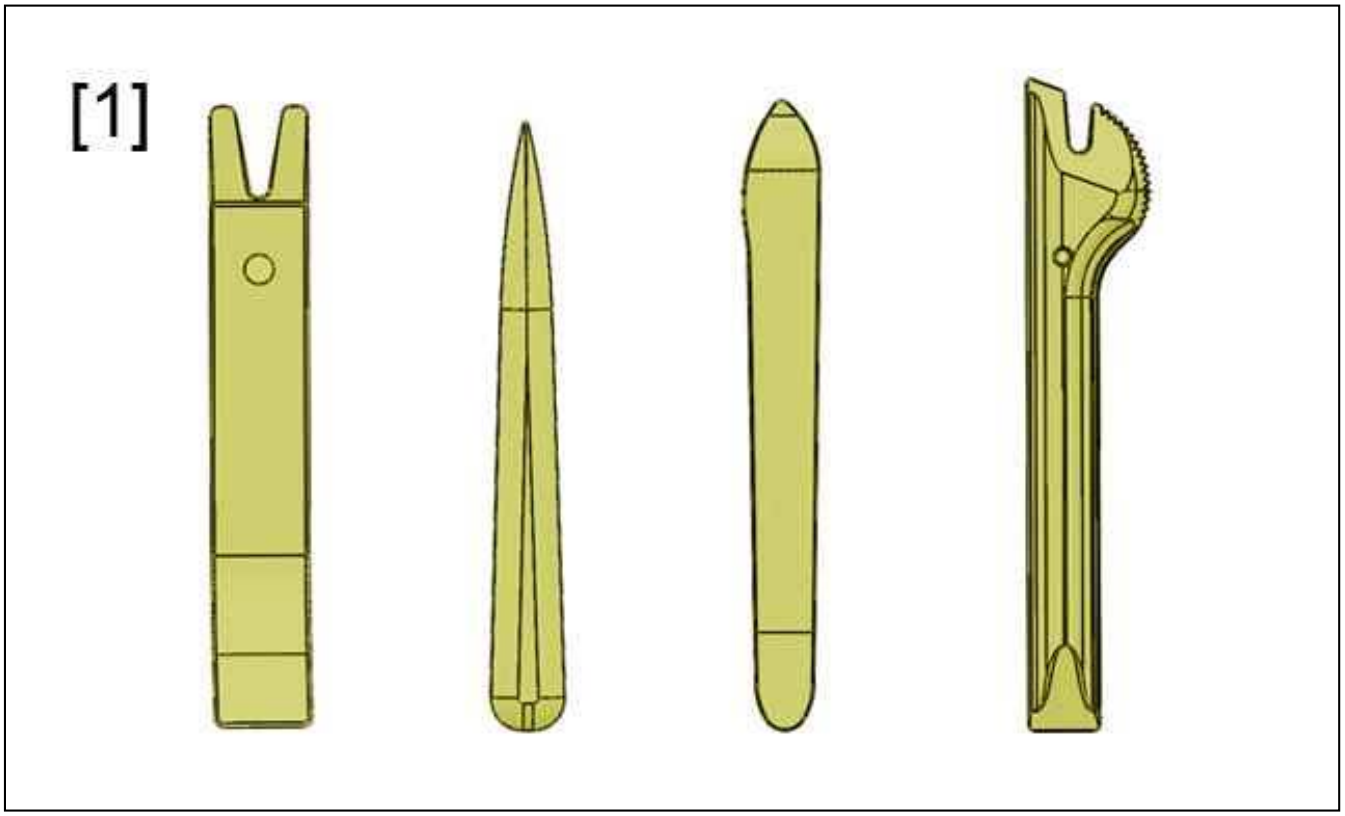

Figure : E5AP30WD

[1] Stripping tools (-).1350.

2. Preliminary operations

Remove :

- The rear bench seat
- The extended cab trims

3. Removing



Figure : C5GM1DBD

(1) Rear seat frame.

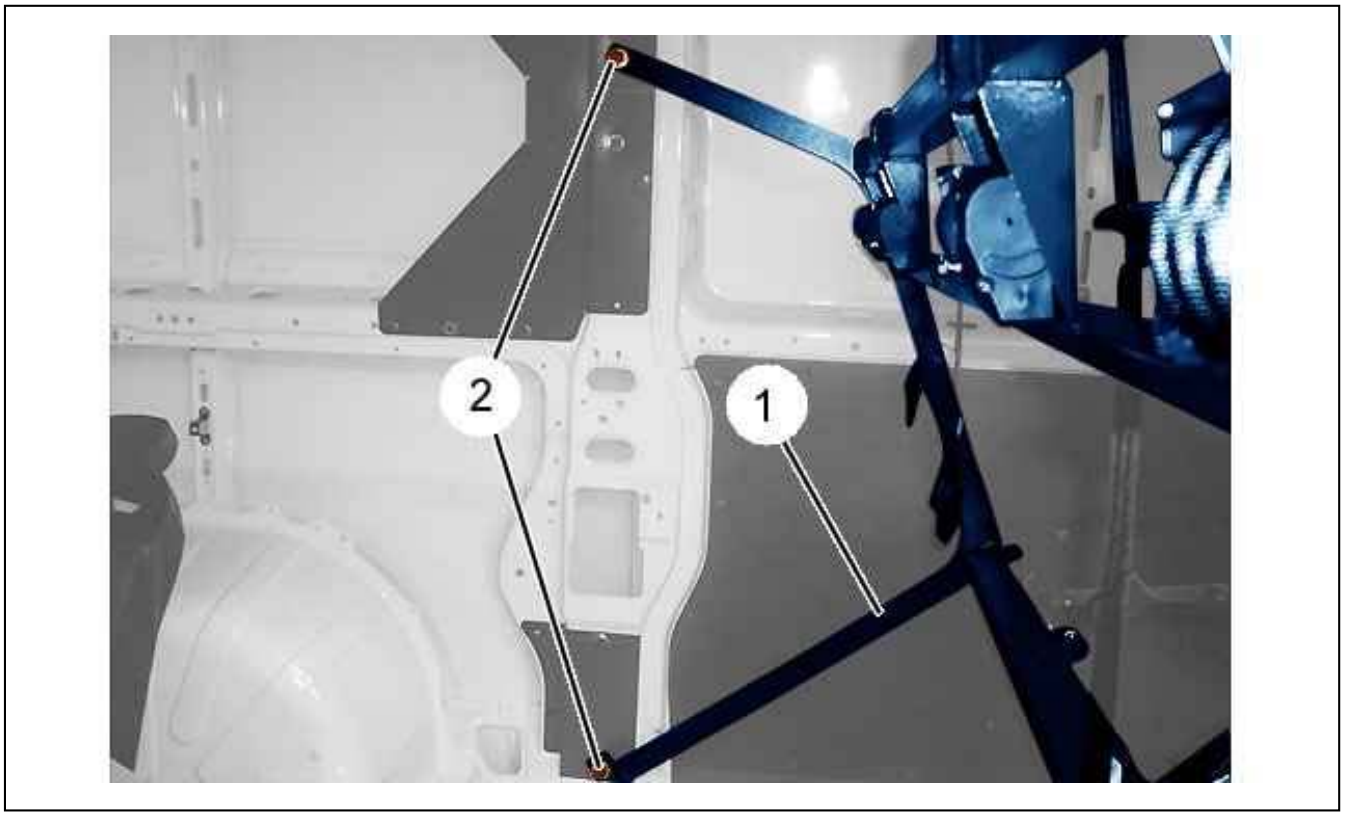

Figure : C5GM1DCD

CAUTION : Two people are required to perform the following operation.

Remove :

- The bolts (2) (Symmetrical operation)
- The rear seat frame (1)

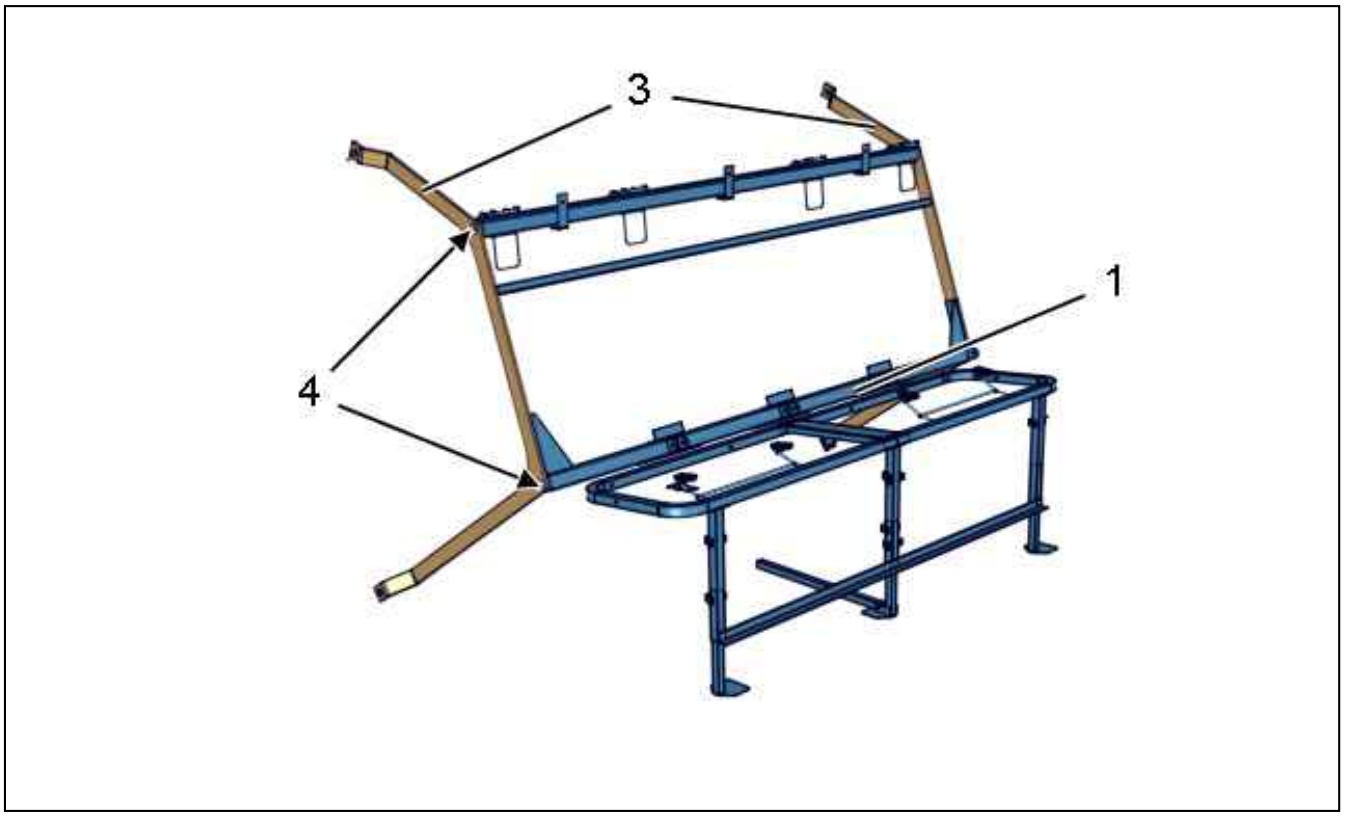

Figure : C5GM1DDD

Remove :

- The rear seat belt inertia reels
- The rear seatbelt stalks
- The bolts (4) (Symmetrical operations)
- The rear seat frame fixings (3)
- The rear seat frame (1)

4. Refitting

Proceed in the reverse order to removal.
Tighten the bolts (2), (4) to 5 m.daN .
Check all the equipment works.

REMOVING - REFITTING : REAR SEAT TRIMS (CREW CAB)

ESSENTIAL : Observe the safety and cleanliness recommendations .

1. Recommended tools

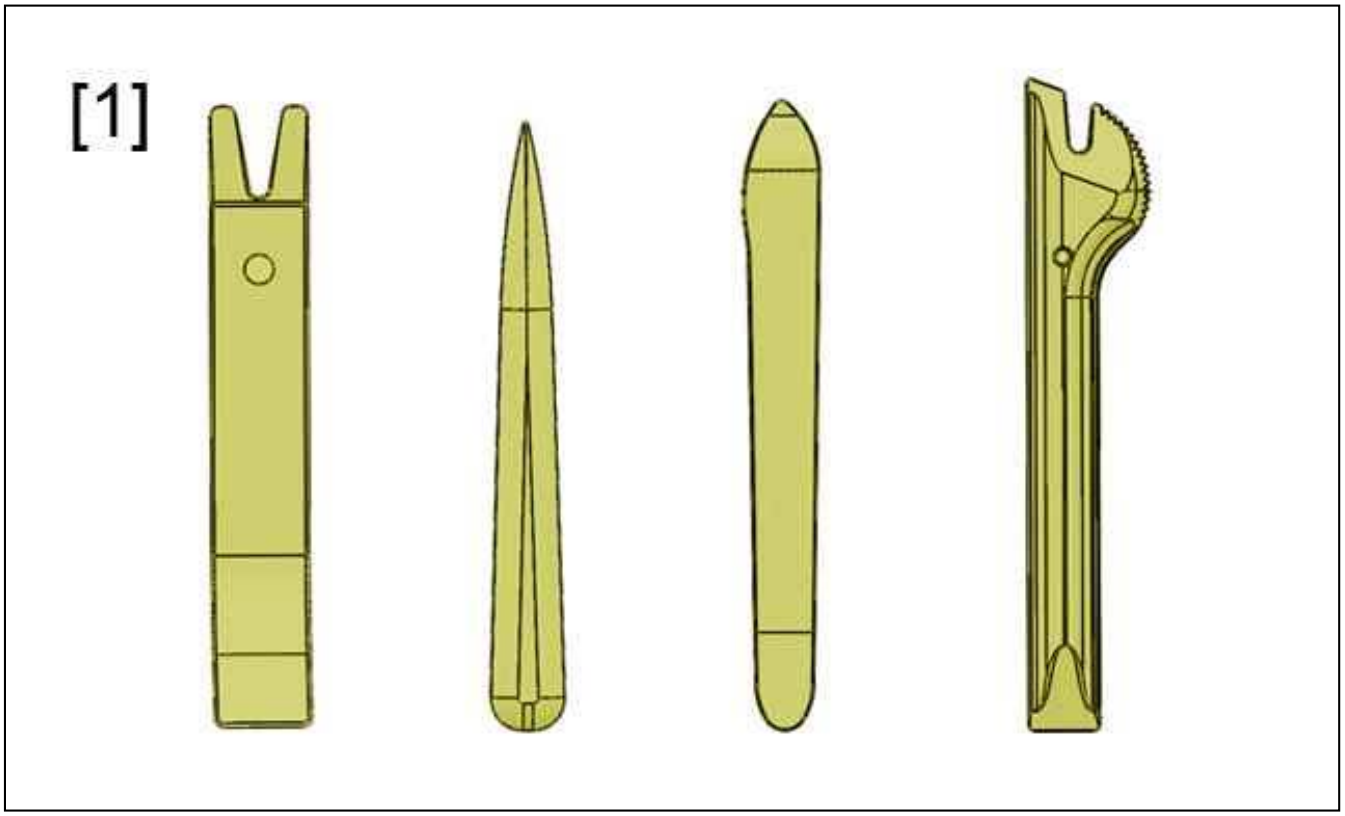

Figure : E5AP30WD

[1] Stripping tools (-).1350.

2. Removing

2.1. Side trim : Rear bench seat

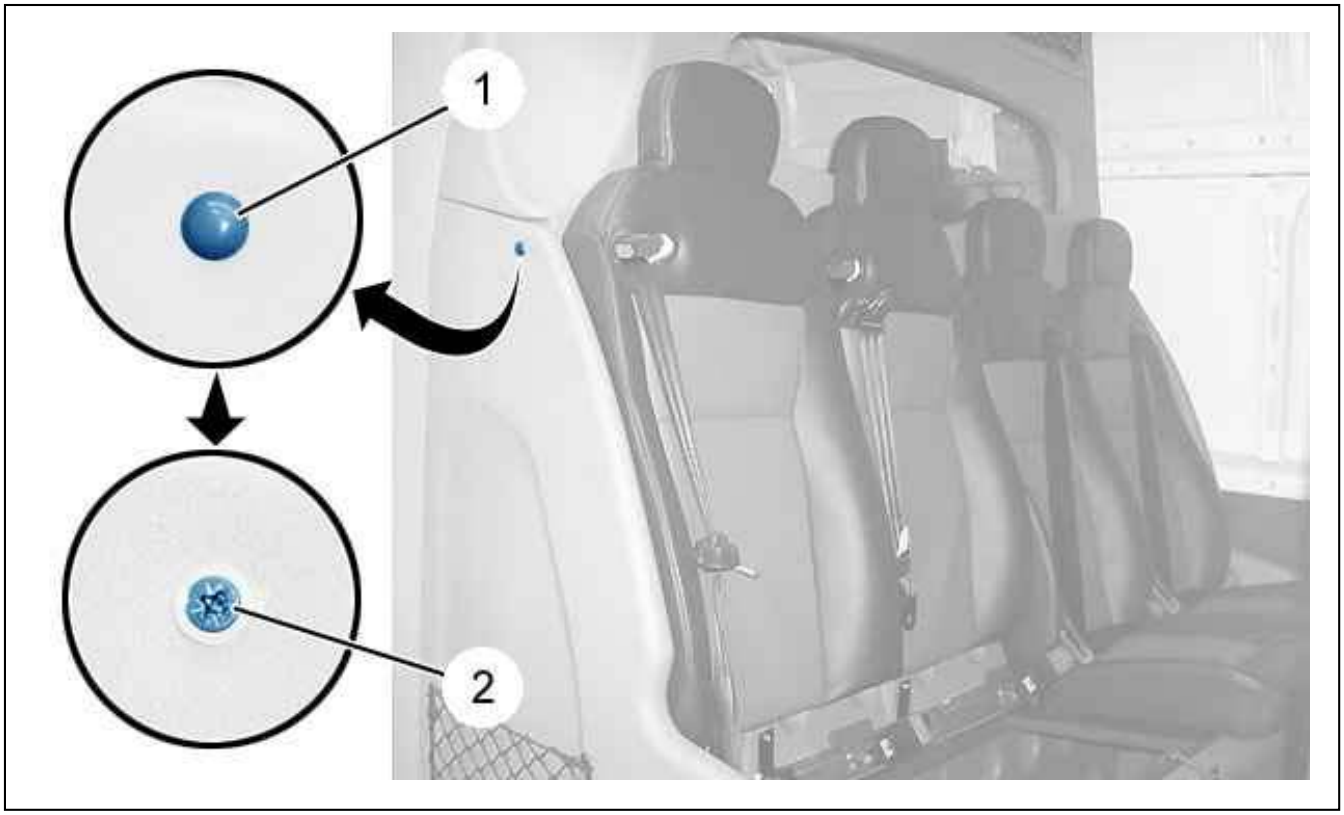

Figure : C5GM1B0D

Remove :

- The rear benchseat base
- The cover (1) ; Using tool [1]
- The (2) bolt

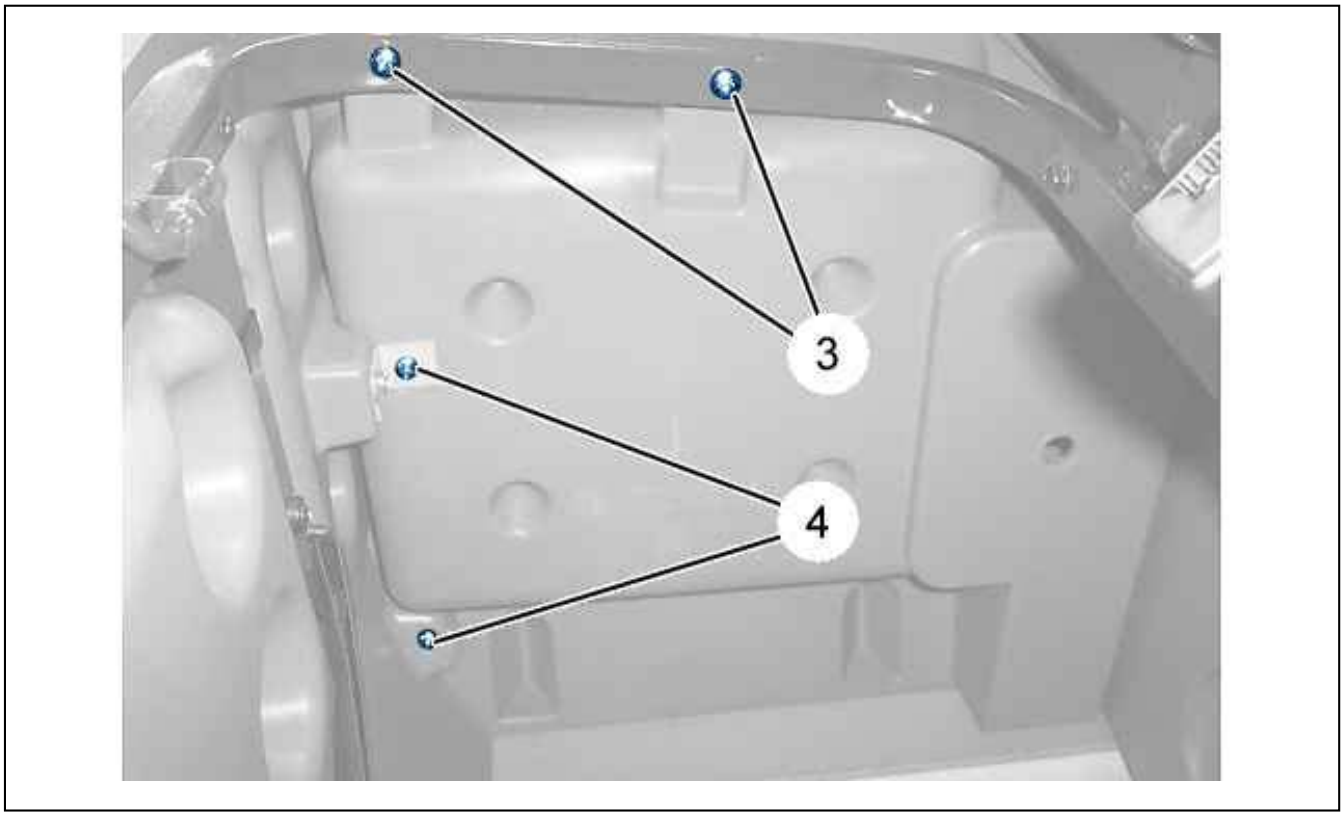

Figure : C5GM1B1D

Remove : The bolts (3), (4).
Remove the rear benchseat backrest .

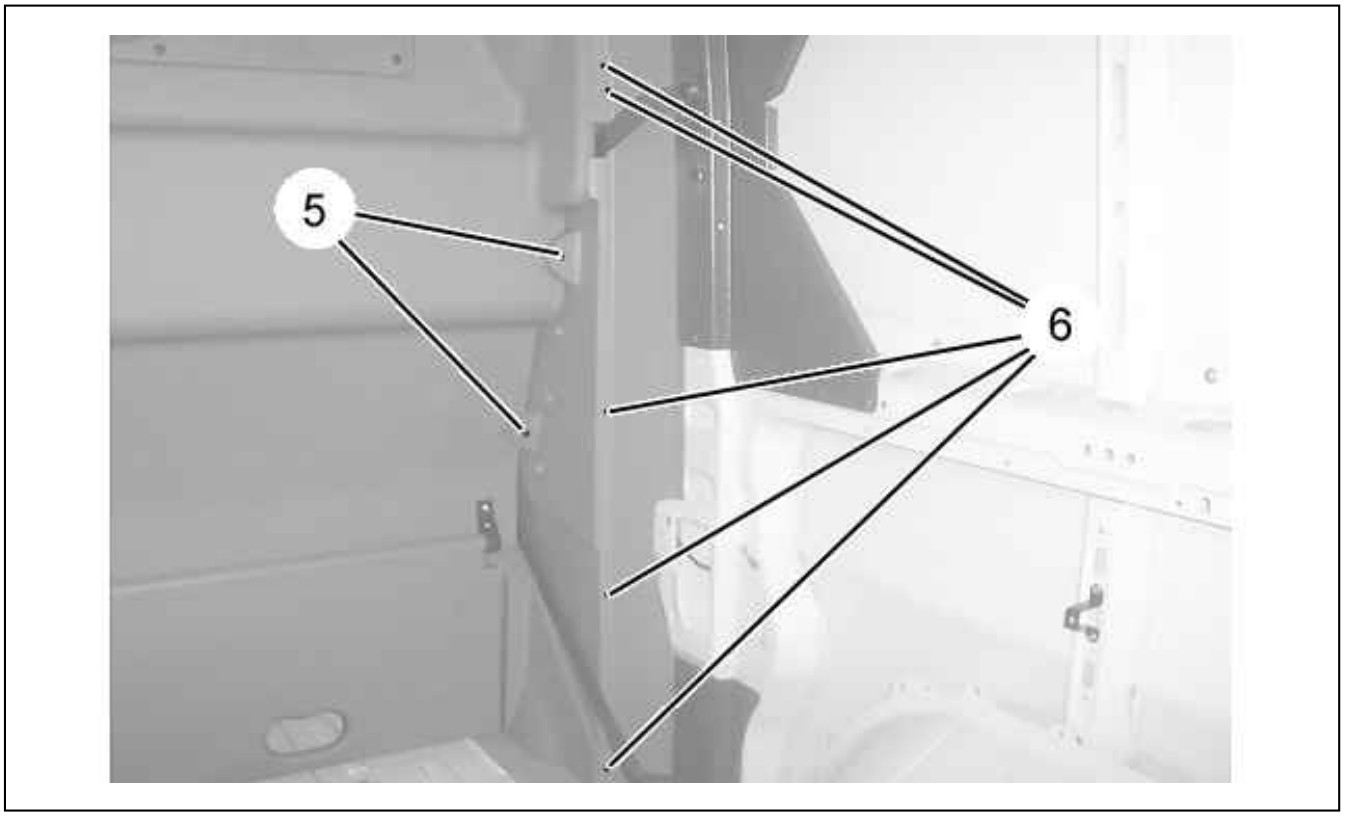

Figure : C5GM1B2D

Remove the bolts (5), (6).



Figure : C5GM1B3D

Remove : The rear bench side trim (7) (Outwards).

2.2. Lower trim : Rear bench seat

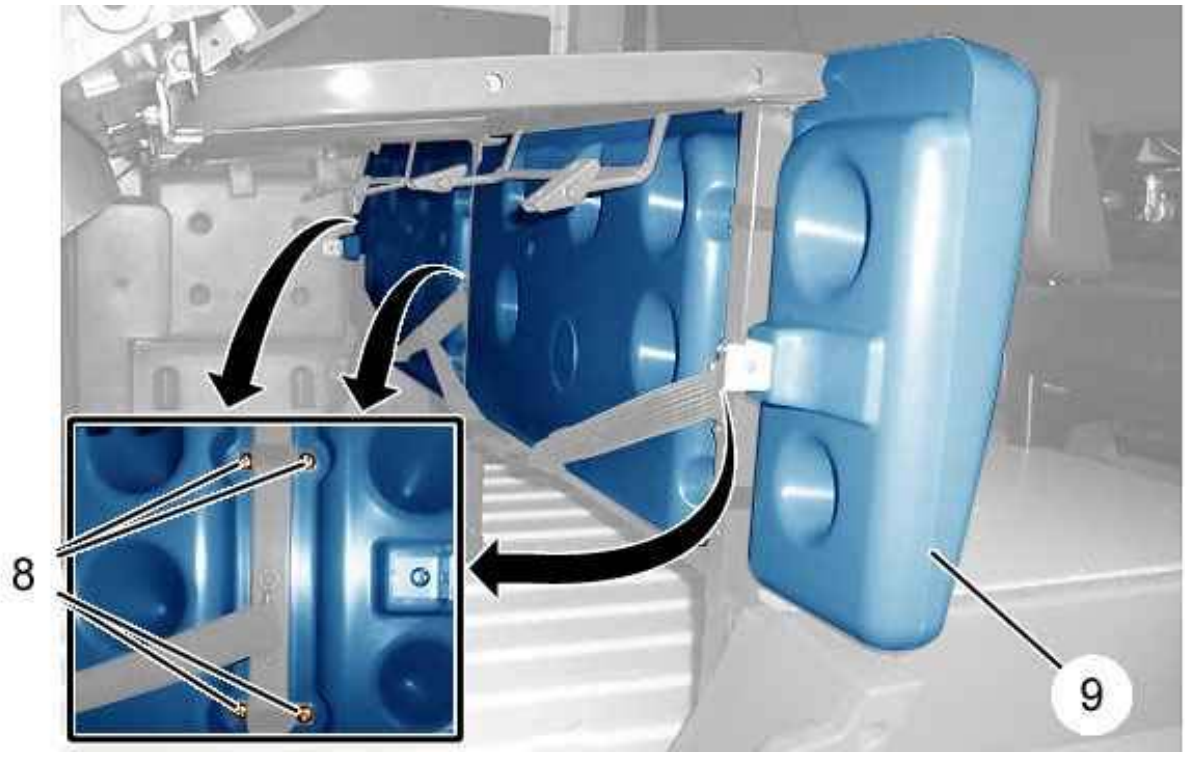

Figure : C5GM1B4D

Remove :

- The bolts (8)
- The lower rear seat trim (9)

2.3. Lower access flap

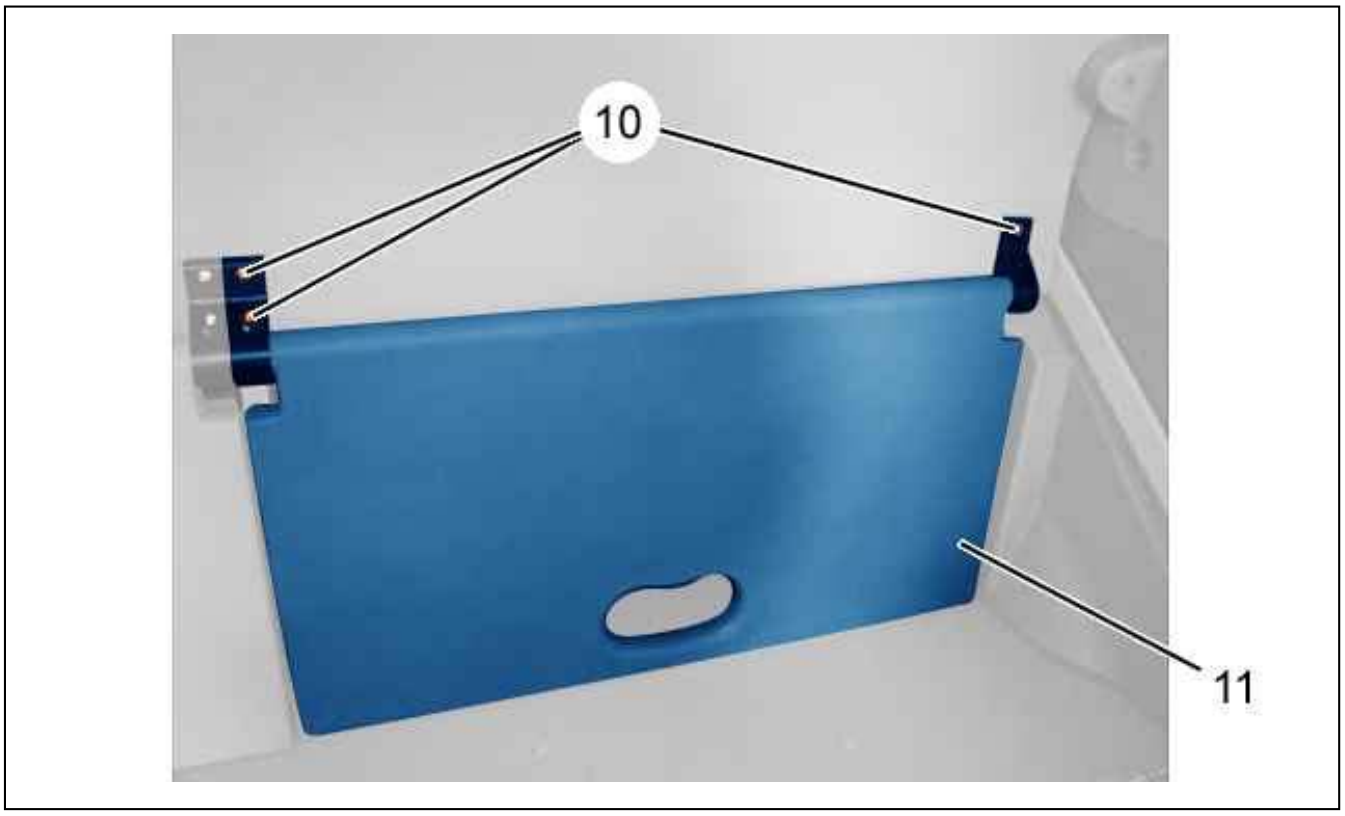

Figure : C5GM1B5D

Remove :

- The bolts (10)
- The lower access flap (11)

2.4. Upper extension : Rear bench seat

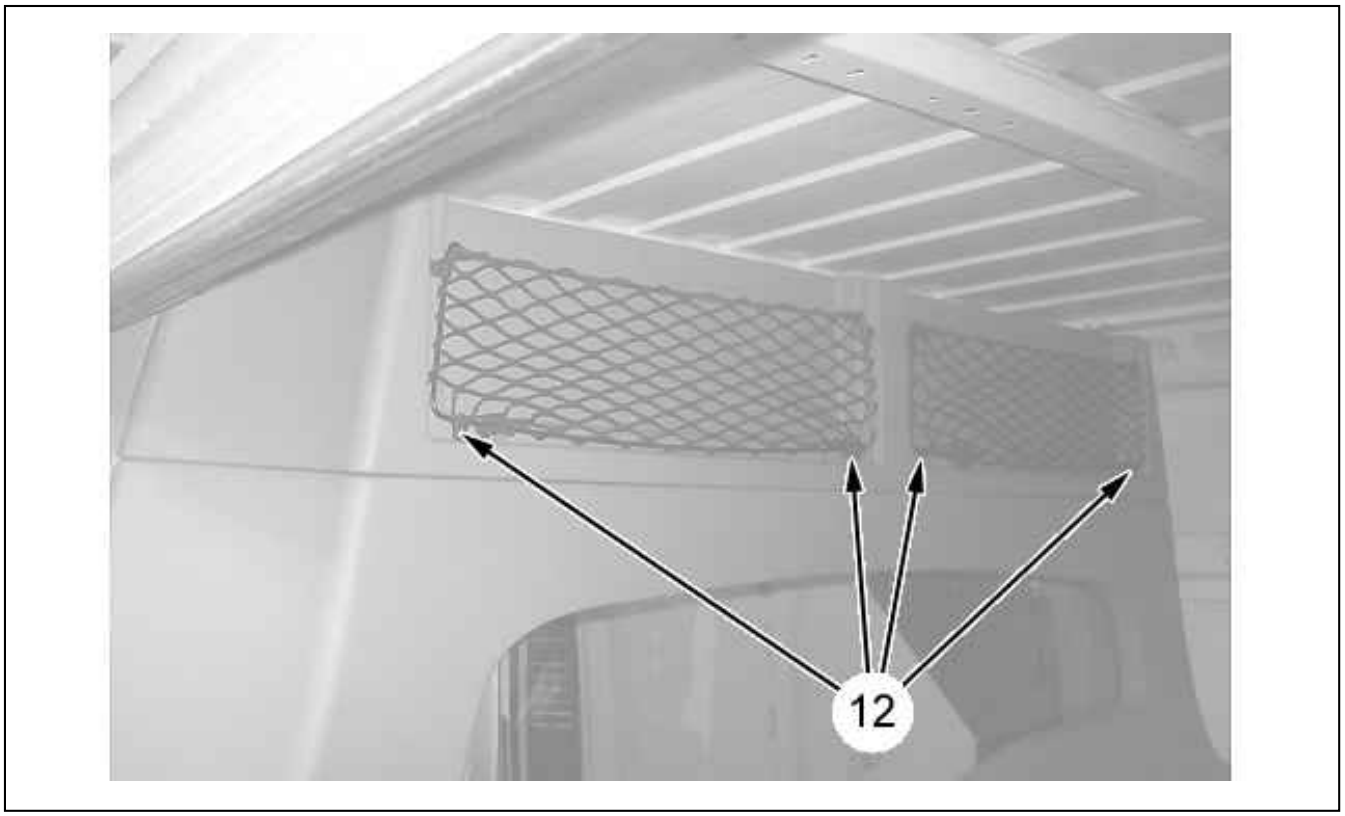

Figure : C5GM1B6D

Remove the bolts (12).

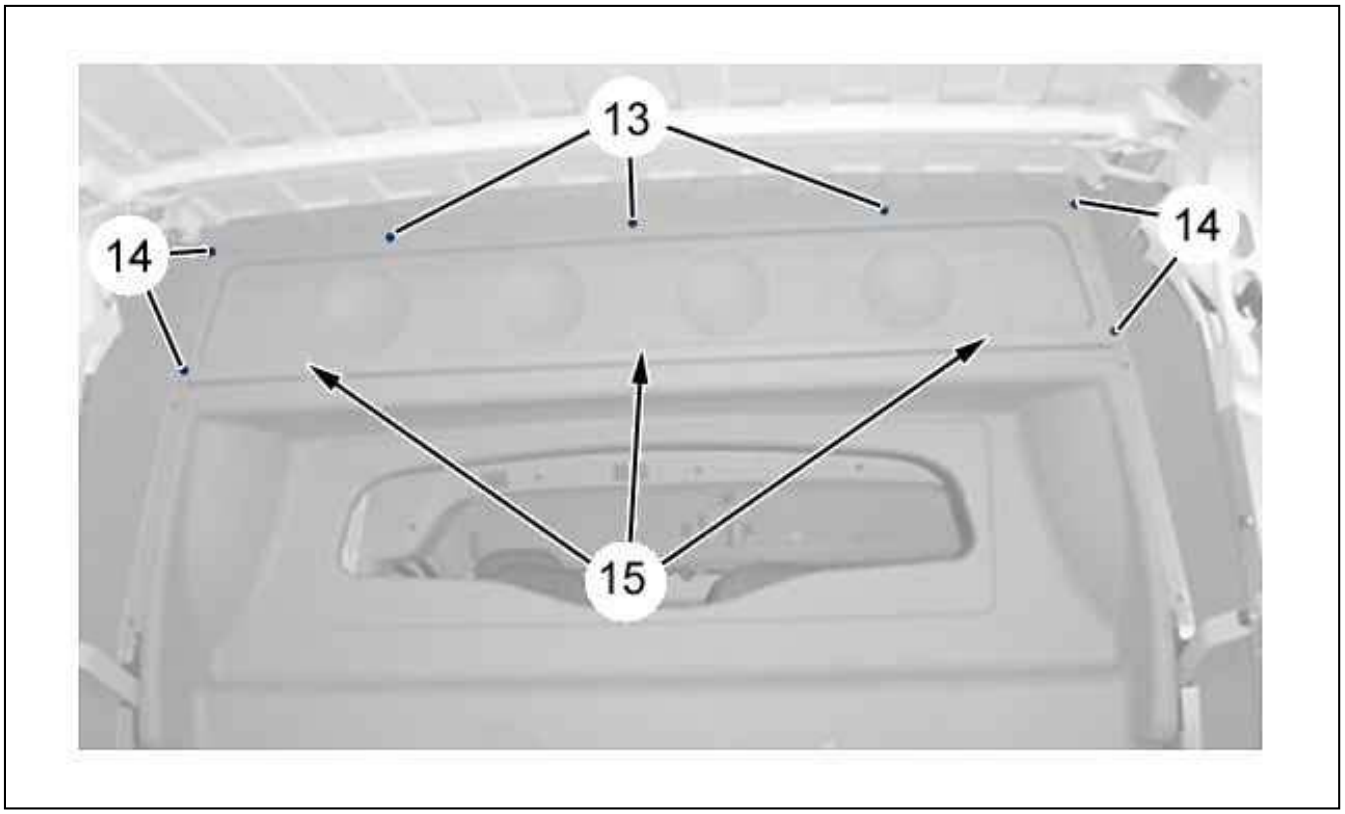

Figure : C5GM1B7D

Remove the bolts (13), (15).
Drift out the rivet studs before drilling out.

Drill the rivet heads (14) with a 6 mm dia. drill.
Drill the bodies of the remaining rivets.

N.B. : Vacuum to extract the rivet waste .

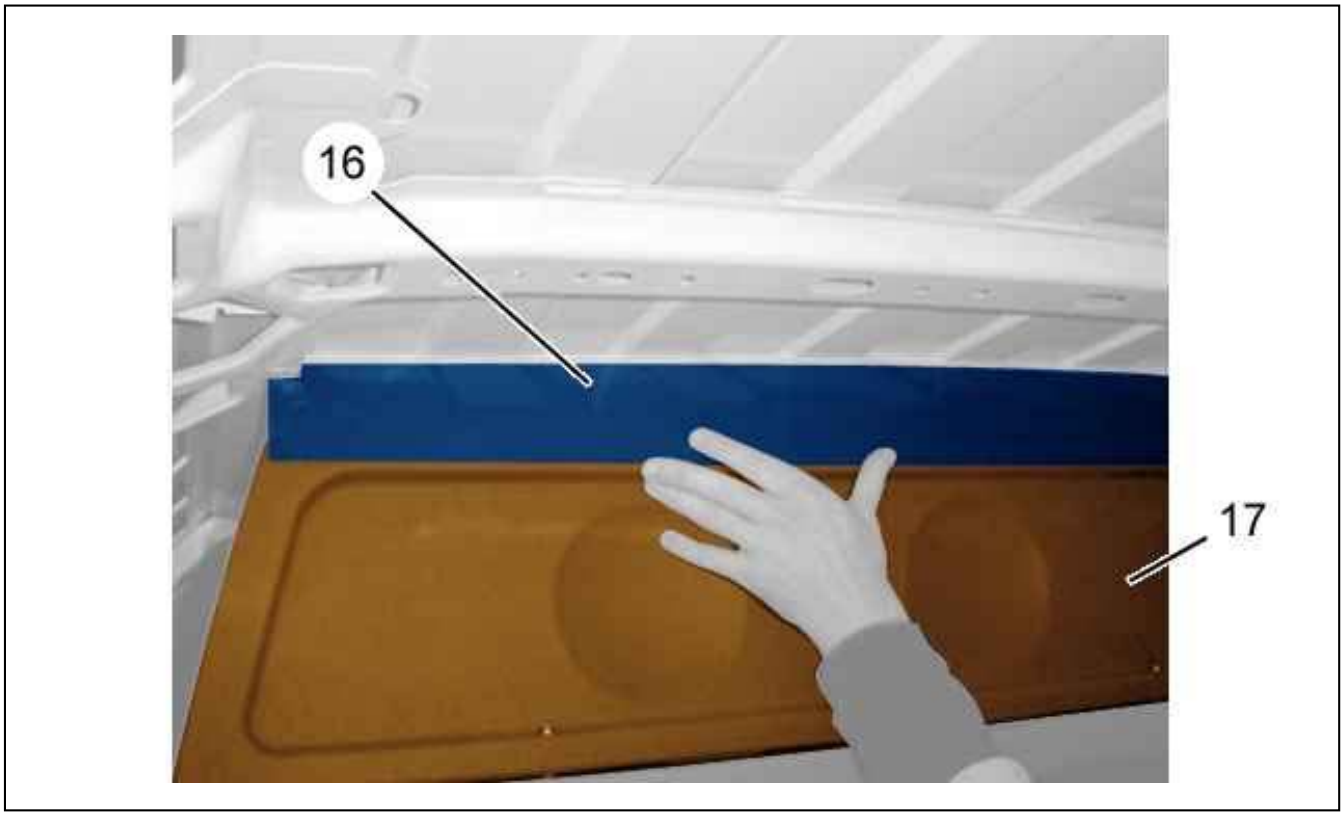

Figure : C5GM1B8D

Remove :

- The closing panel (16) of the other extension of the rear seat
- The upper extension (17) of the rear seat

2.5. Rear seat partition

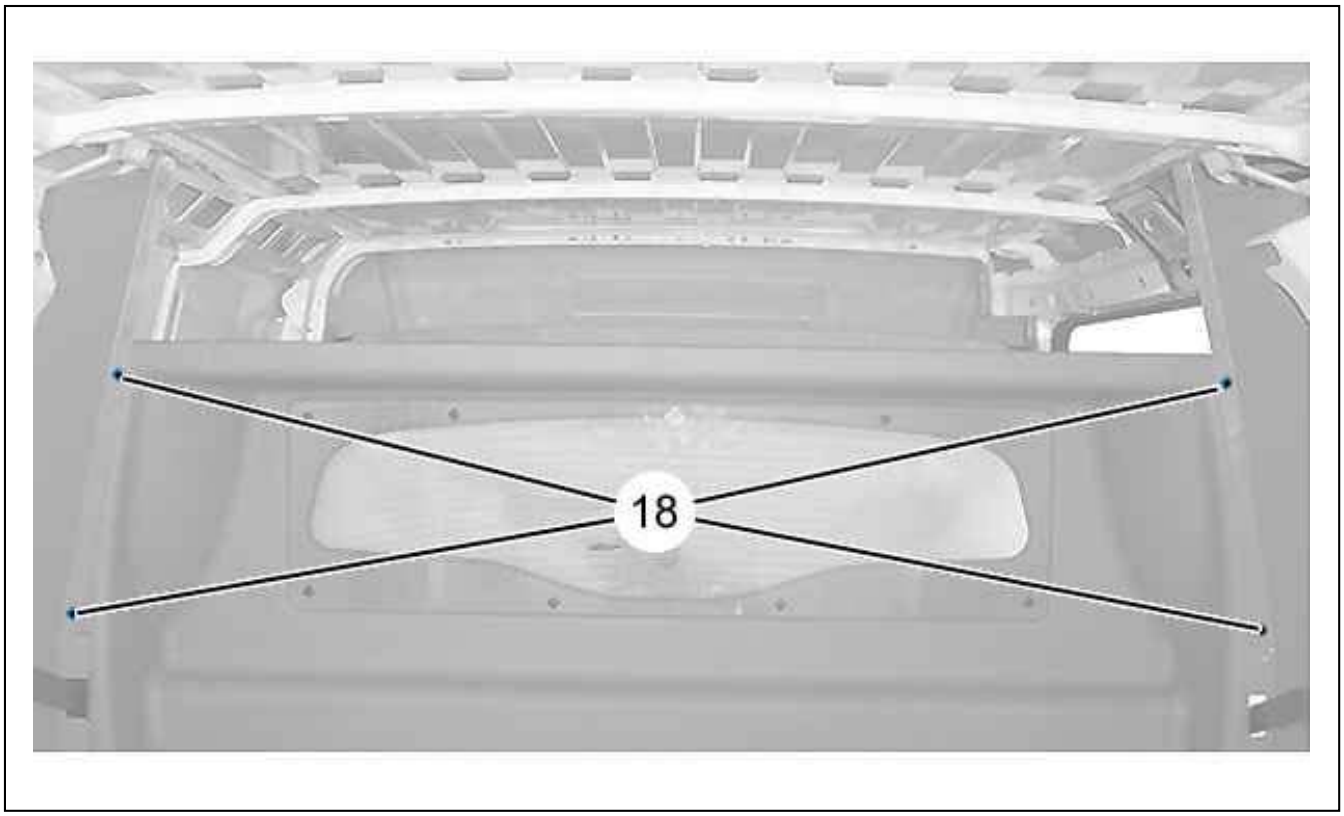

Figure : C5GM1B9D

Remove the bolts (18).

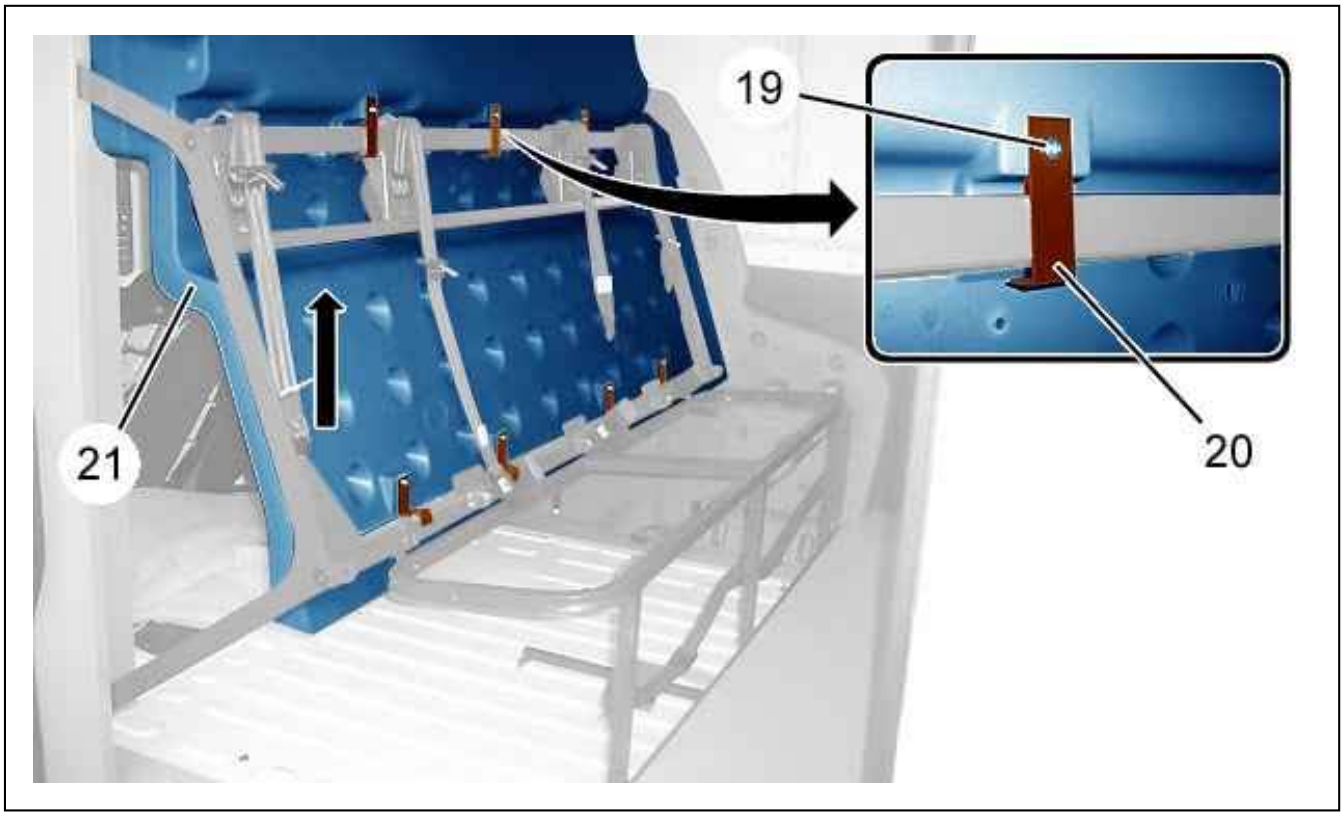

Figure : C5GM1BAD

Remove :

- The bolts (19)

- The mountings (20)

Detach : The cab partition (21) (following the arrow).

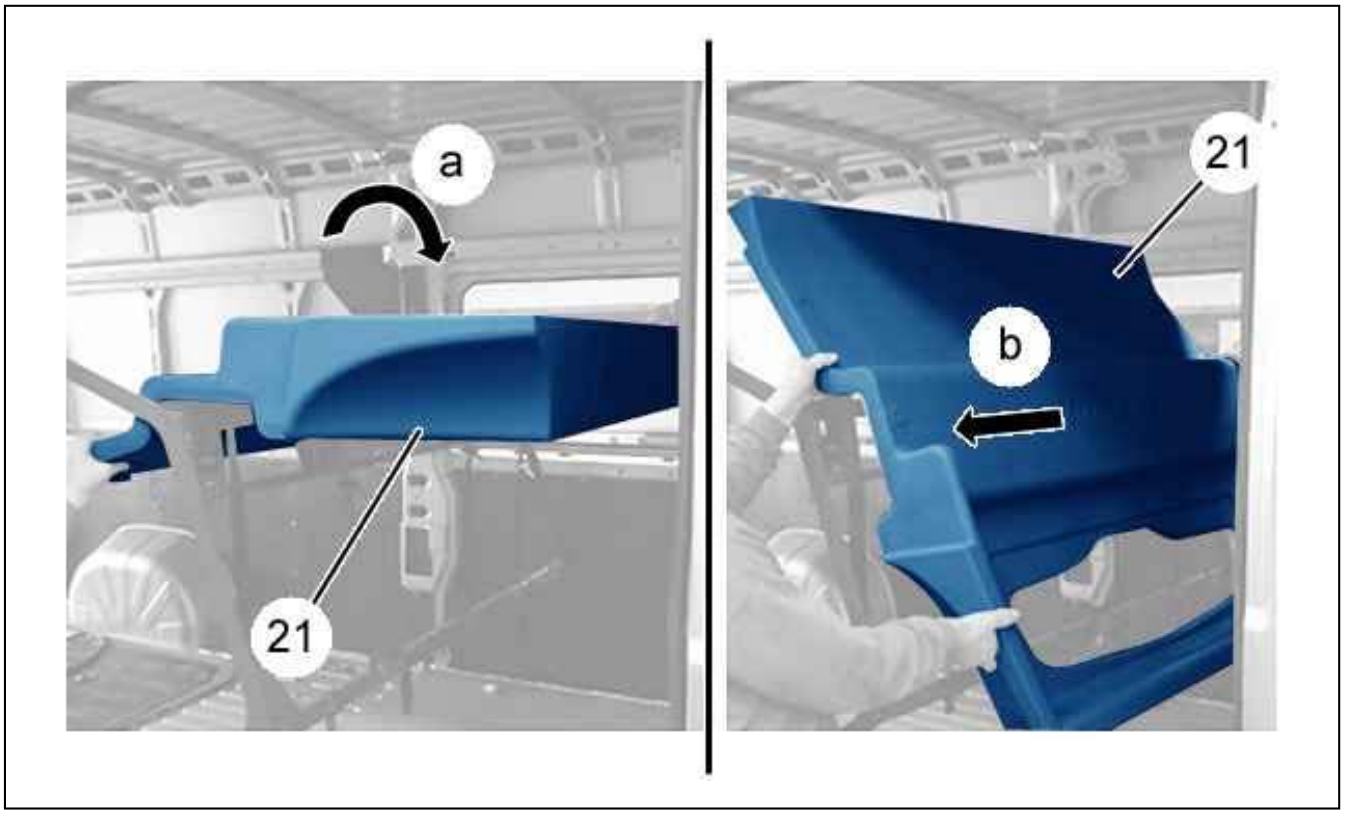

Figure : C5GM1BBD

CAUTION : Two people are required to perform the following operation.

Rotate the cab partition (21) (as "a") (In the direction of the arrow).
Remove : The cab partition (21) (as "b") (In the direction of the arrow).

2.6. False floor (Before) - False floor trim

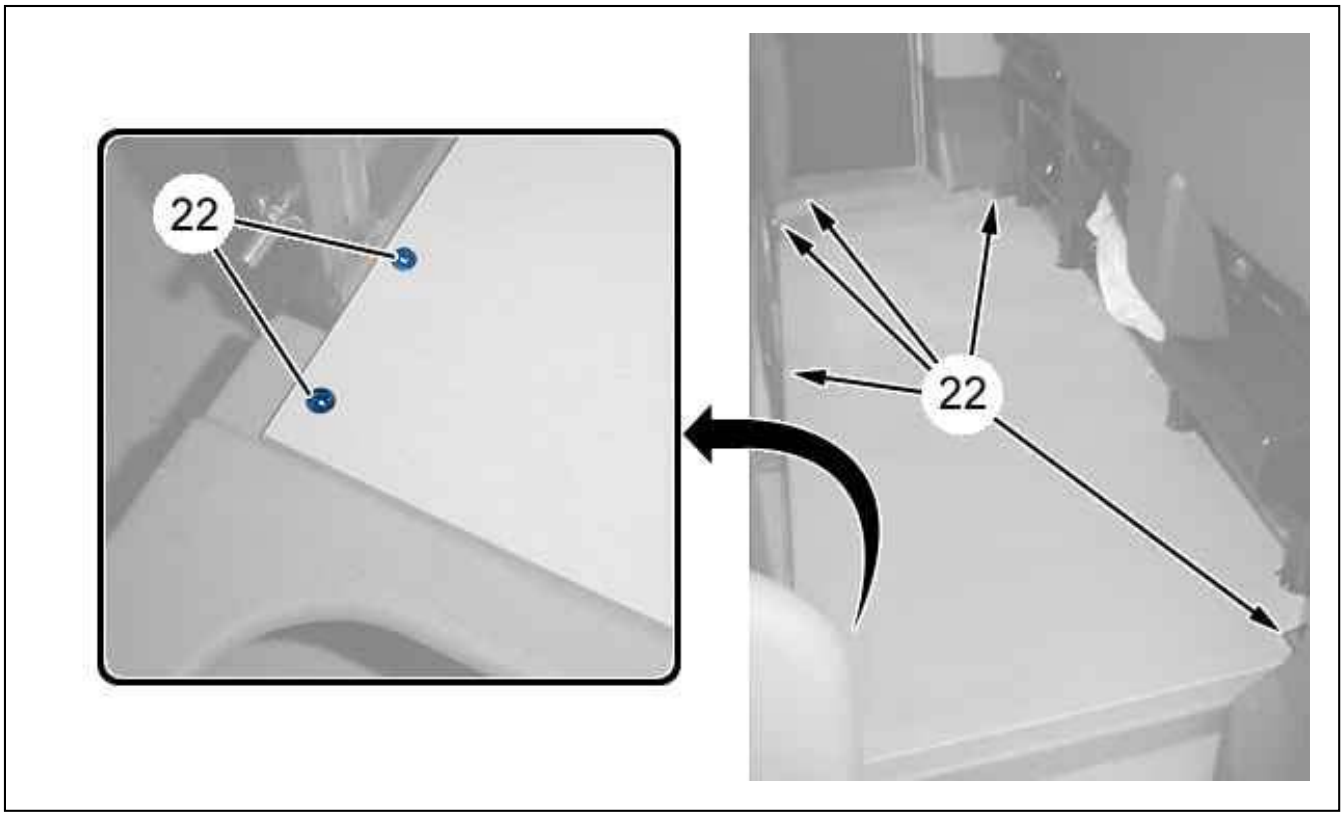

Figure : C5GM1BCD

Remove the bolts (22).

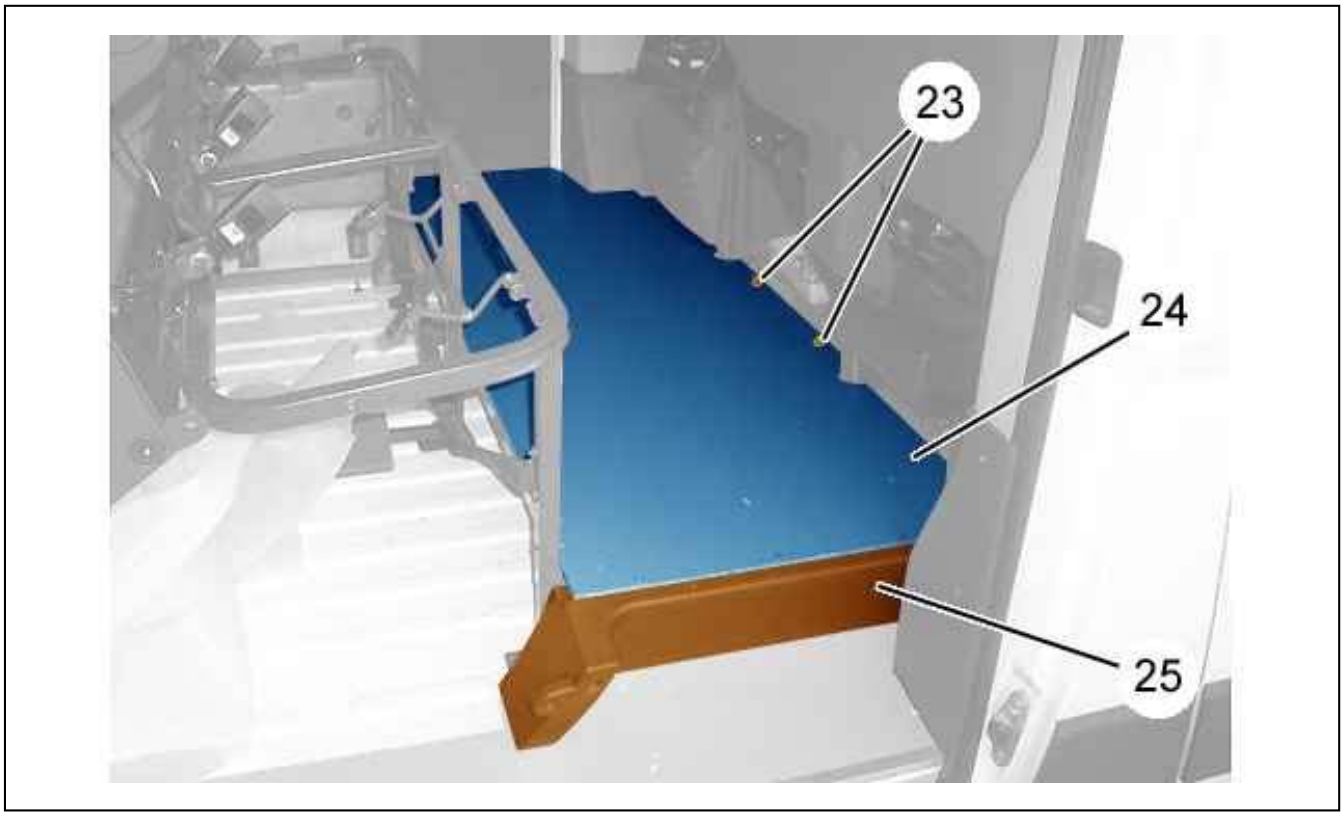

Figure : C5GM1BDD

Remove :

- The bolts (23)

- The false floor (24)
- The false floor trim (25)

3. Refitting

Proceed in the reverse order to removal.
Check all the equipment works.

REMOVING - REFITTING : REAR WHEEL SENSOR

ESSENTIAL : Observe the safety and cleanliness recommendations .

1. Removing

Untighten the rear wheel bolts.
Raise and support the vehicle, with the rear wheels hanging free.

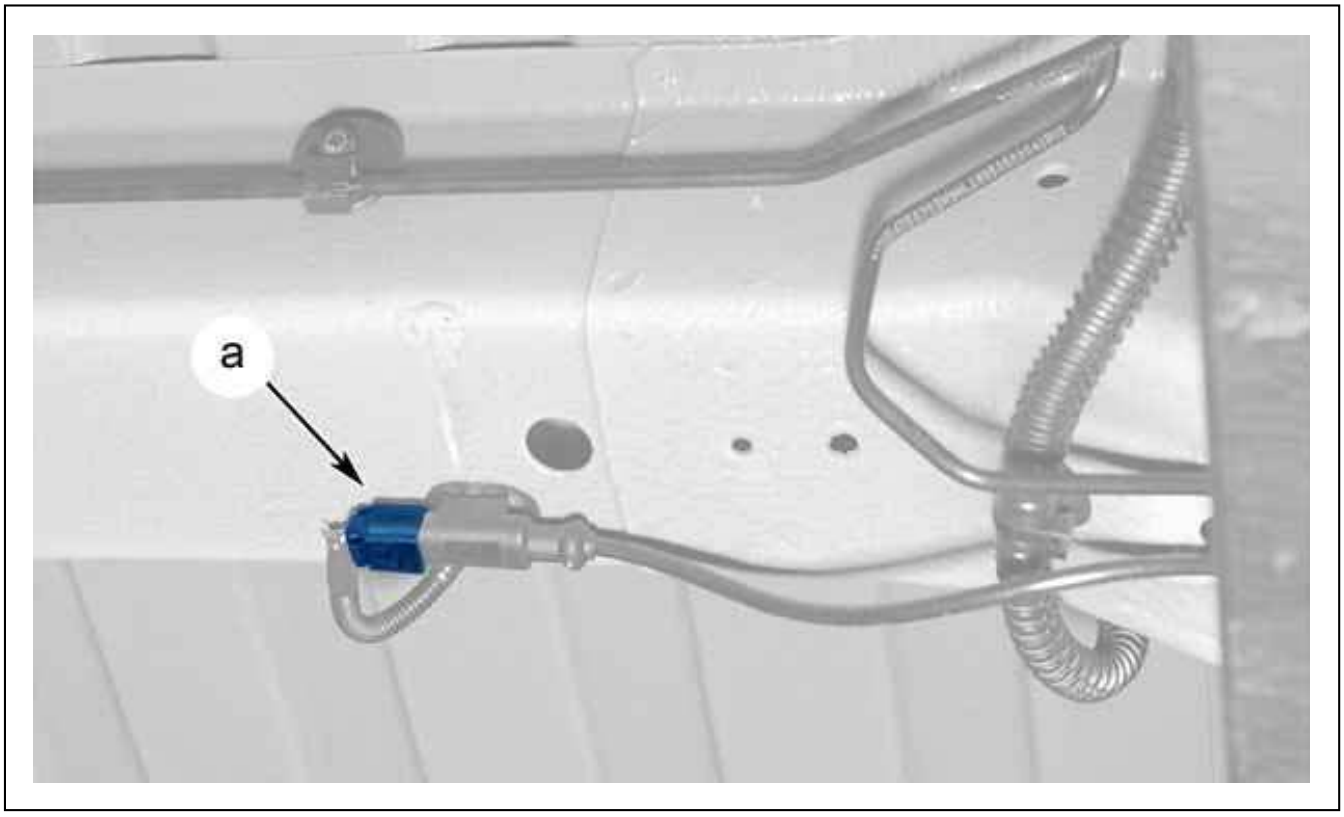

Figure : B3DP0DED

Disconnect the connector (at "a").
Unclip the electrical harness .

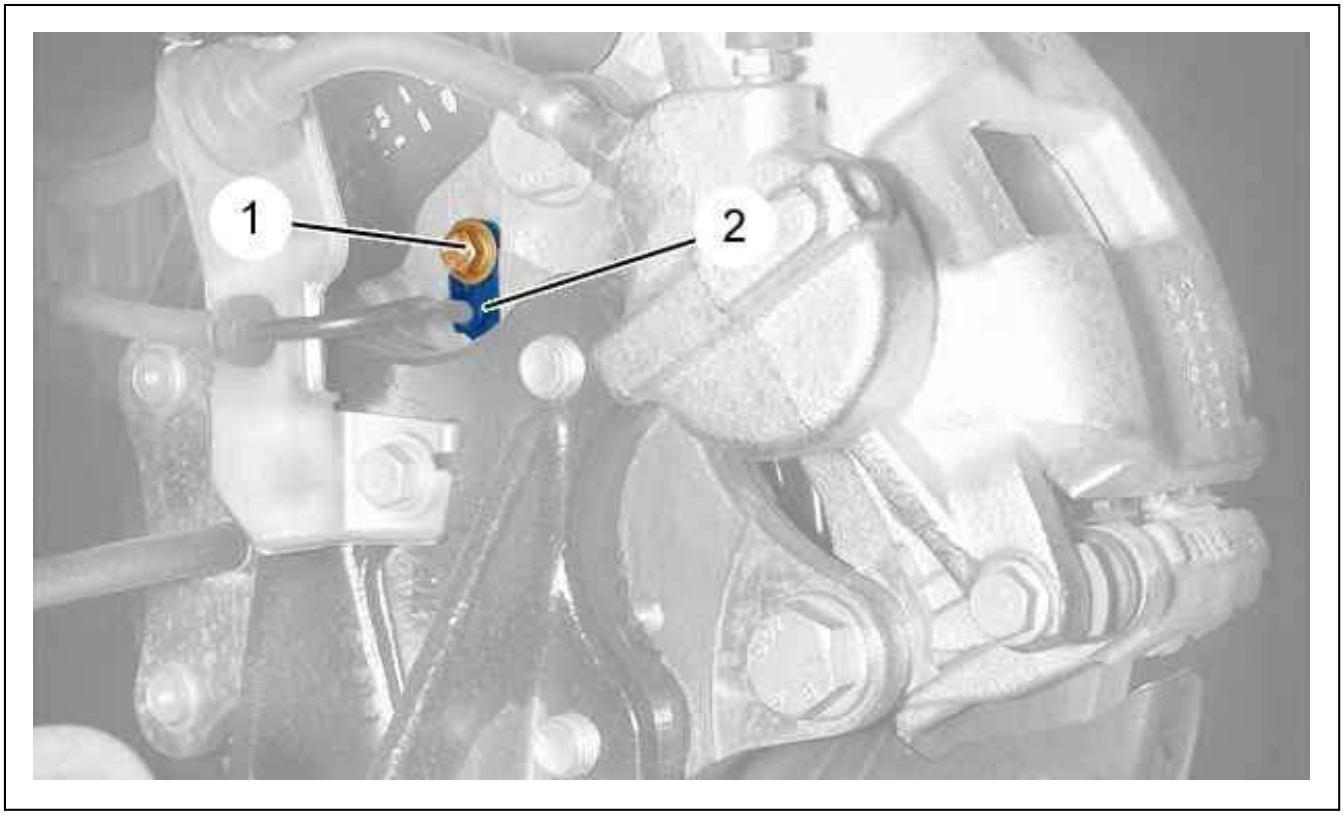

Figure : B3FG240D

Remove :

- The (1) bolt
- The sensor (2)

2. Refitting

CAUTION : Adhere to the tightening torques .

Fit the sensor (2).
Tighten the bolt (1).
Clip the harness.
Reconnect the connector (en "a").
Return the vehicle to its wheels.
Road test.
Read the fault codes.

REMOVING - REFITTING : HYDRAULIC VALVE BLOCK (ABS/ESP)

ESSENTIAL : Observe the safety and cleanliness recommendations .

1. Tooling

Pedal press.
Diagnostic tool.

2. Removing

Disconnect the battery.
Position the pedal press on the brake pedal in order to stem the flow of brake fluid when disconnecting the brake lines.
Remove :

- The front LH headlamp
- The rubber protection (according to equipment)

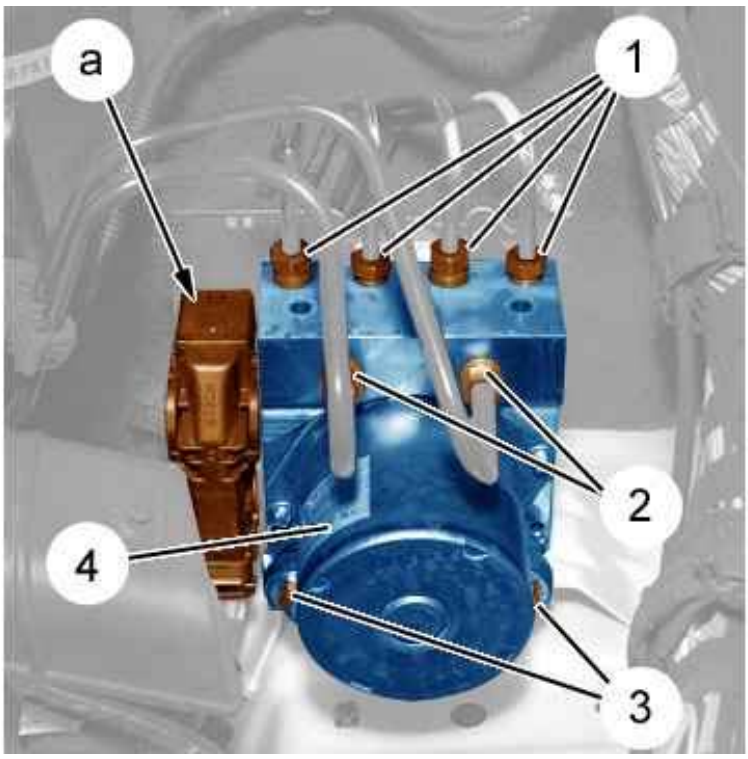

Figure : B3FG1YLD

Disconnect the connector (at "a").
Disconnect the connectors (1) and (2) (beware of escaping fluid).

N.B. : Do not apply force to the hydraulic pipes.

Unscrew the nuts (3).
Remove the hydraulic valve block (4).

CAUTION : Plug the inlets and outlets of the hydraulic valve block (4) to prevent any foreign bodies getting in.

3. Refitting

CAUTION : Remove the plugs from the apertures of the hydraulic valve block before fitting the brake pipes.

N.B. : The hydraulic valve block (4) is delivered full of brake fluid .

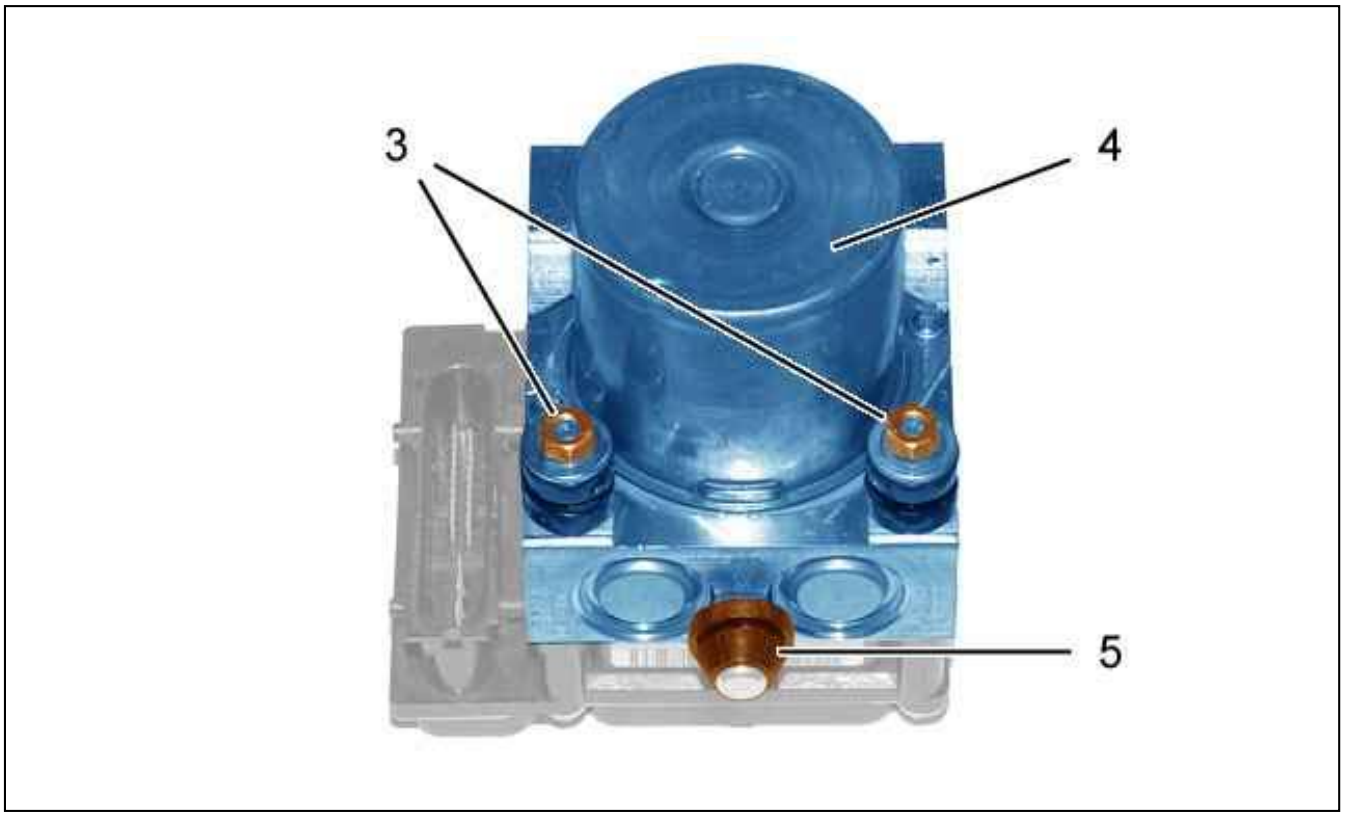

Figure : B3FP7MZD

Check that the rubber pad (5) is present (according to equipment).
Refit the hydraulic valve block (4) onto its support.
Engage the rubber pad (5) in its support (according to equipment).

CAUTION : Adhere to the tightening torques .

Tighten the nuts (3).
Recouple unions (2) and (1).
Connect the connector (at "a").
Refit :

- The rubber protection (according to equipment)
- The front LH headlamp

Remove the pedal push .

CAUTION : Perform the operations to be carried out following reconnection of the battery.

Reconnect the battery.
Bleed the brake system .

3.1. Vehicle with ESP

Connect the diagnostic tool to the vehicle’s diagnostic socket.
Carry out an global test.
Start communication by ECU.
To calibrate the steering wheel angle sensor, go to the replacement parts menu, longitudinal acceleration sensor, calibration of the longitudinal acceleration sensor.
To calibrate the longitudinal acceleration sensor, go to the replacement parts menu, switch module at the steering whee calibration of the steering wheel angle sensor (CAV).

3.2. Refitting (continued)

Carry out :

- Perform a road test
- Reading of the fault codes

REMOVING - REFITTING : FRONT WHEEL SENSOR

ESSENTIAL : Observe the safety and cleanliness recommendations .

1. Removing

Release the front wheel bolts.
Lift and support the front of the vehicle.
Remove the front wheels.

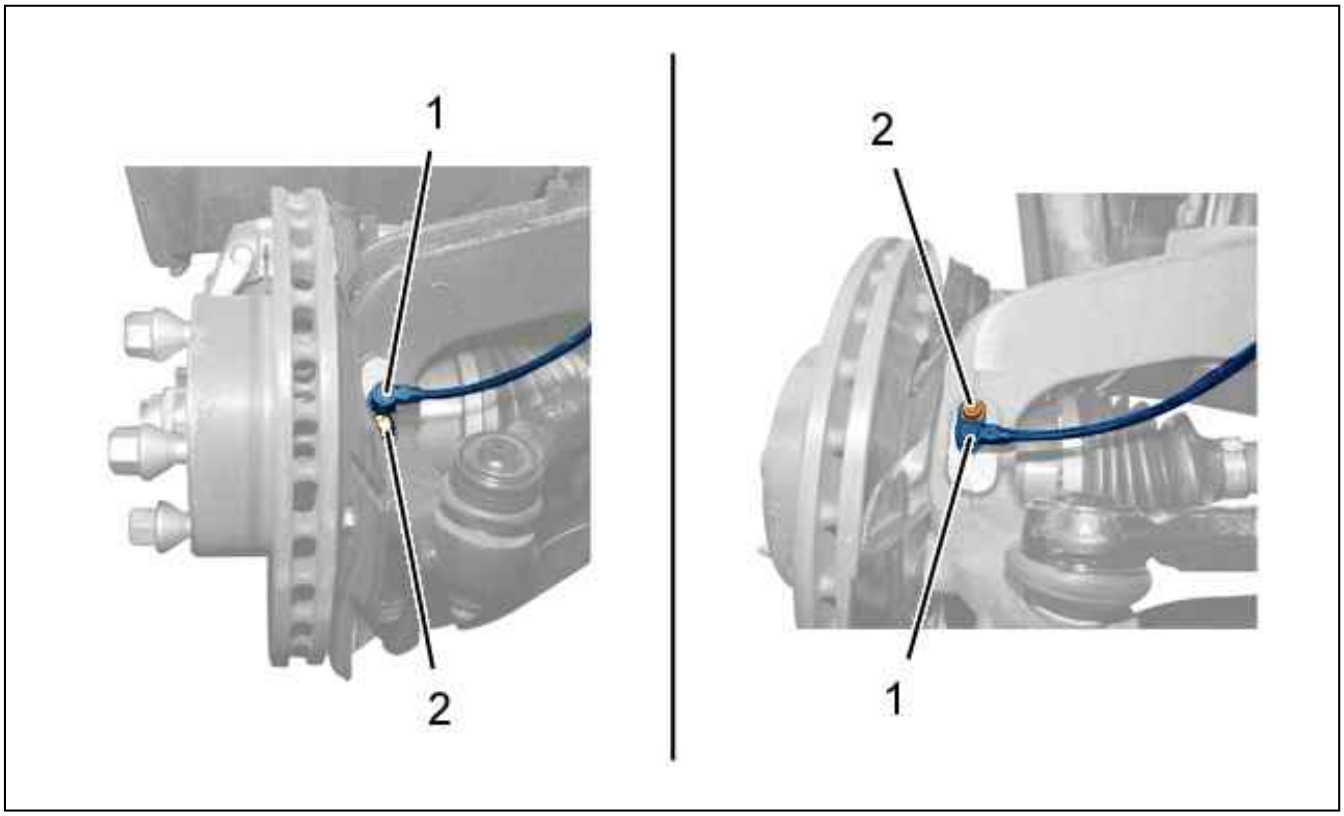

Figure : B3FG241D

Remove :

- The front splash shield
- The bolt (2) (according to assembly)
- The sensor (1) (according to assembly)

Unclip the harness .
Disconnect the wheel sensor connector.

2. Refitting

CAUTION : Adhere to the tightening torques .

Refit :

- The sensor (1)
- The bolt (2)

- The front splash shield

Clip the harness.
Reconnect the wheel sensor connector .
Fit the wheels.
Return the vehicle to its wheels.
Tighten the wheel bolts .
Road test.
Read the fault codes.

REMOVING - REFITTING : ABS/ESP ECU

ESSENTIAL : Observe the safety and cleanliness recommendations .

1. Tooling

Equipment : Diagnostic station.

2. Removing

Disconnect the battery.
Remove the ABS/ESP hydraulic valve block .

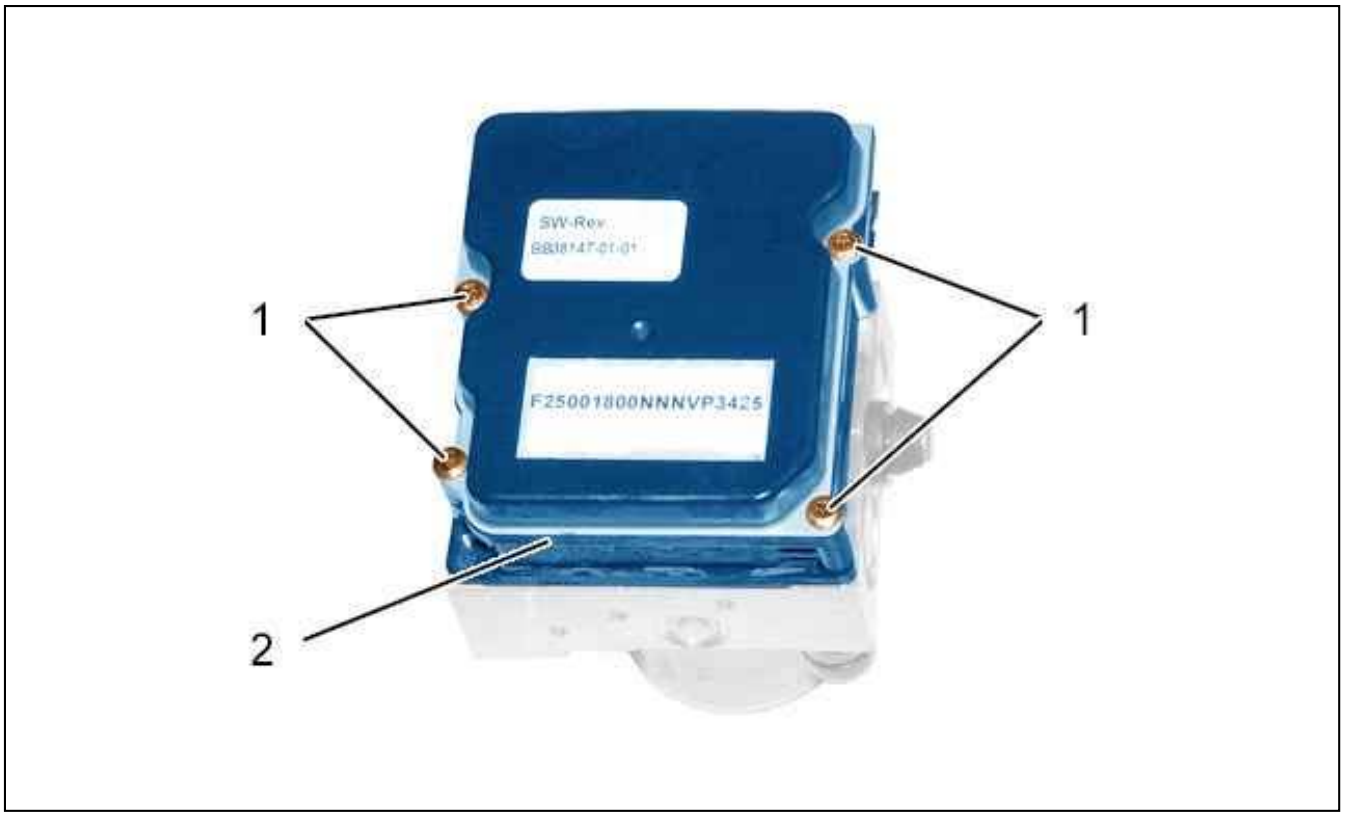

Figure : B3FP7N0D

Remove :

- The bolts (1)
- The ABS/ESP ECU (2)

3. Refitting

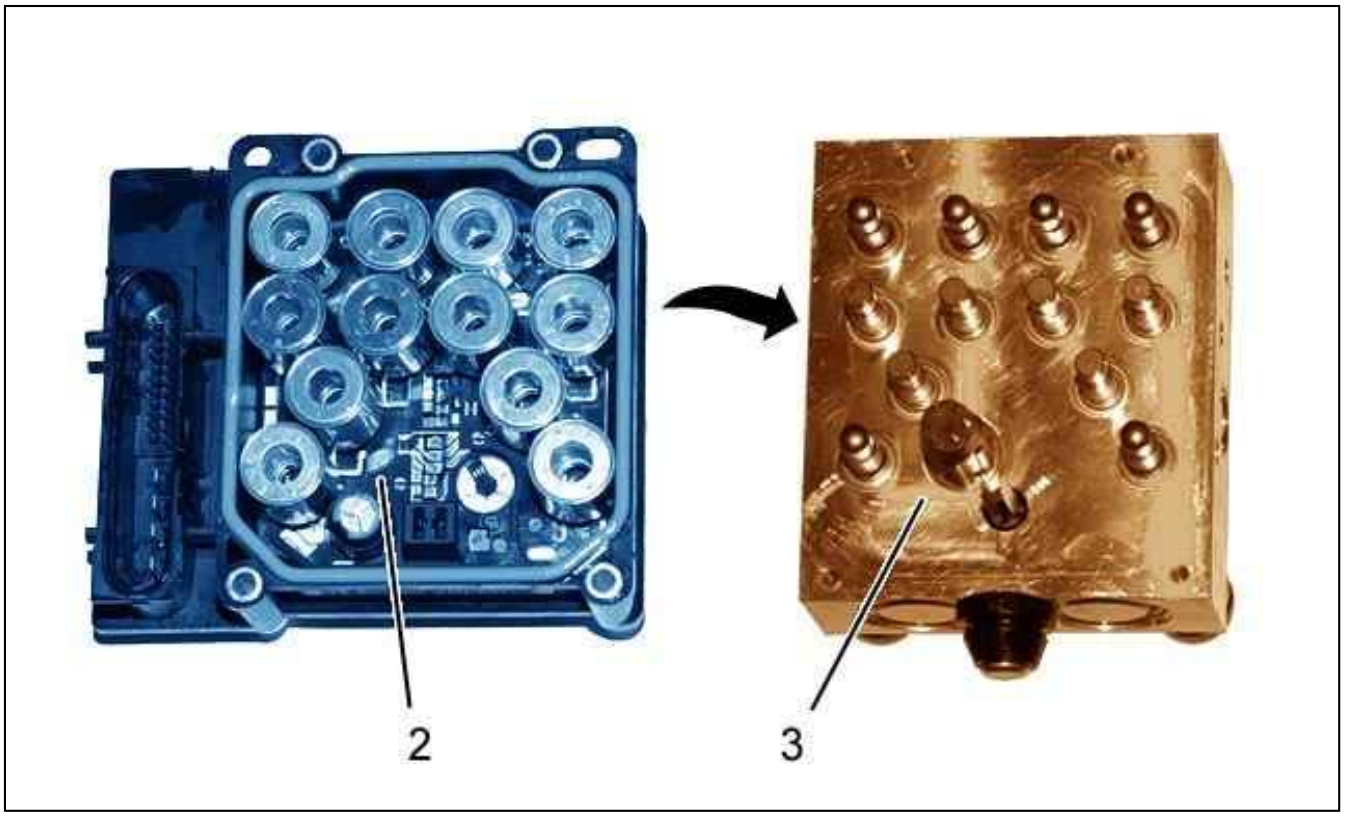

Figure : B3FP7N1D

Refit :

- The ABS/ESP ECU (2) (on the hydraulic valve block (3))
- The bolts (1)

Pre-tighten to 1,75 ± 0,25 N.m.
Tighten to 3 ± 0,3 N.m.
Refit : The ABS/ESP hydraulic block .

CAUTION : Perform the operations to be carried out following reconnection of the battery.

Reconnect the battery.
Bleed the brake system .

3.1. ESP ECU

Connect the diagnostic tool to the vehicle’s diagnostic socket.
Carry out an global test.
Start communication by ECU.
To calibrate the steering wheel angle sensor, go to the replacement parts menu, longitudinal acceleration sensor, calibration of the longitudinal acceleration sensor.
To calibrate the longitudinal acceleration sensor, go to the replacement parts menu, switch module at the steering whee calibration of the steering wheel angle sensor (CAV).

3.2. Refitting (continued)

Carry out :

- Perform a road test
- Reading of the fault codes

REMOVING - REFITTING : SUN VISOR MODULE

1. Recommended tools

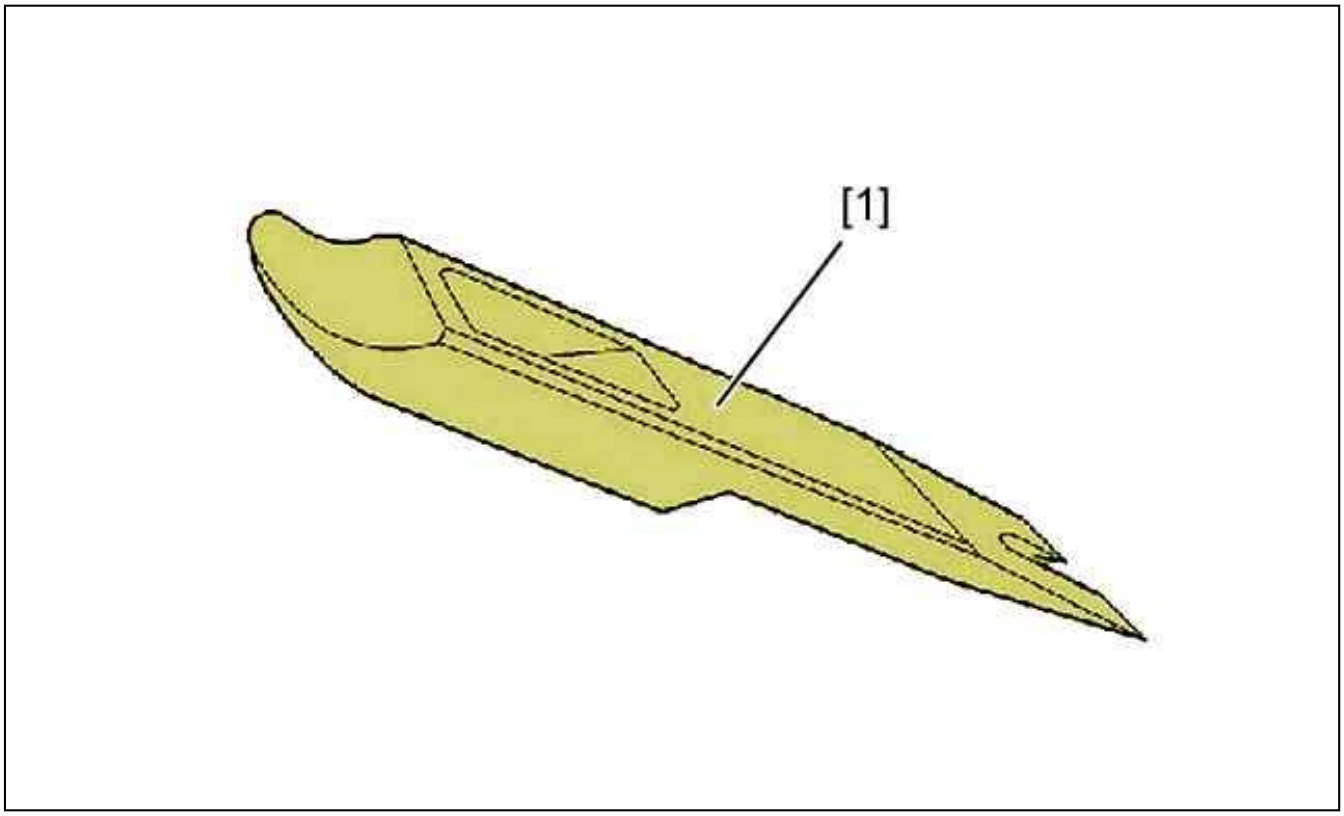

Figure : E5AP2THD

Reference	Designation	Reference
[1]	Unclipping lever	(-).1330-E
	Tool for removing side mouldings	8205-T.E

2. Removing

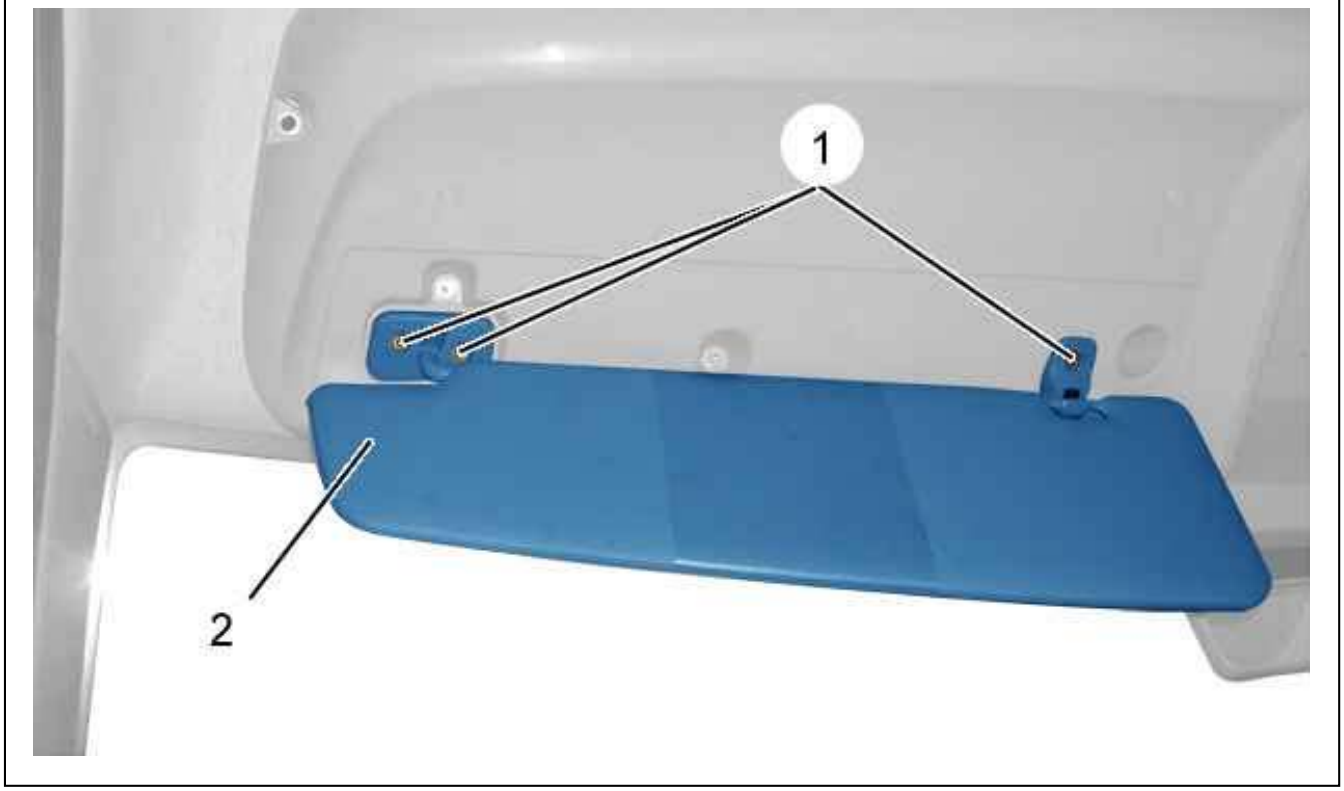

Figure : C5GP0MFD

Remove (driver's side) :

- The sun visor screws (1)
- The sun visor (2)

Proceed in the same way for the other side.

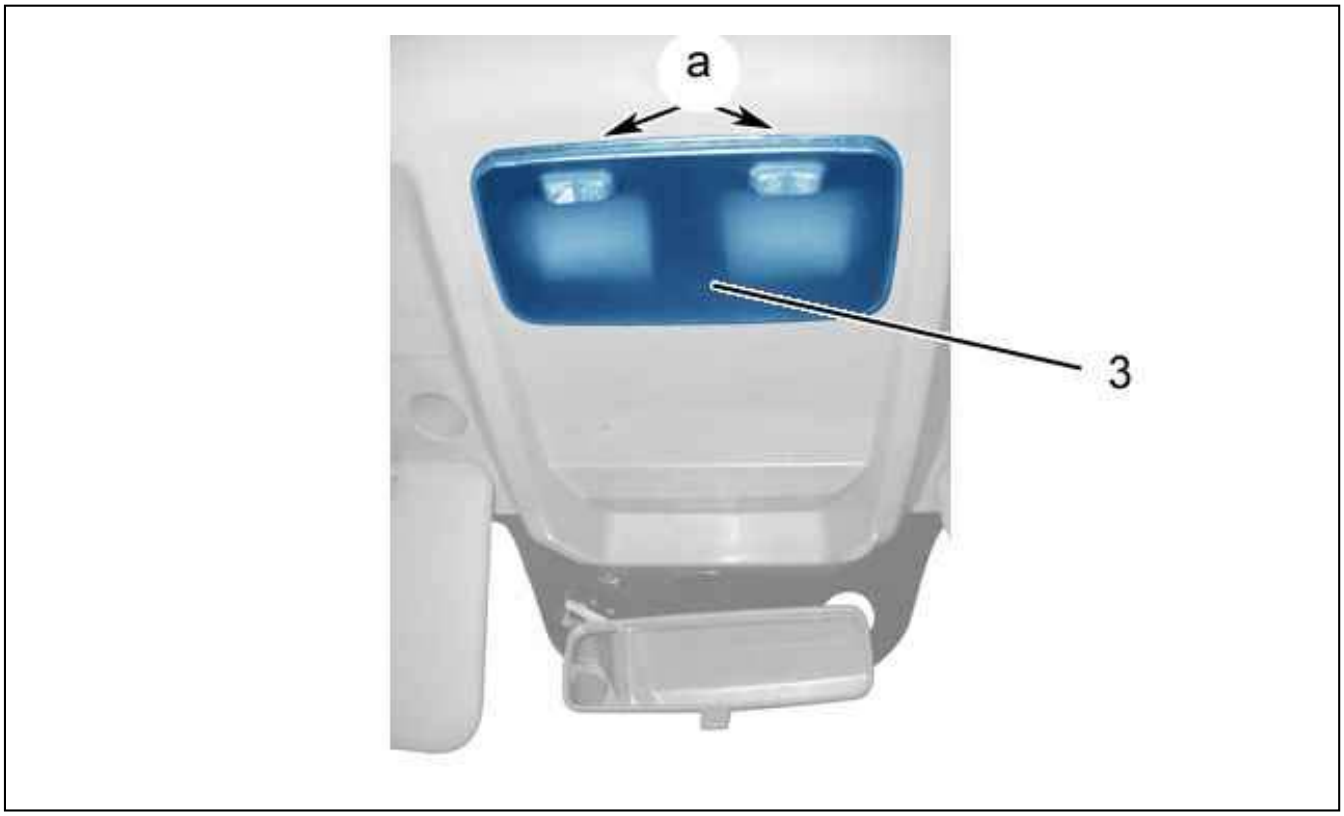

Figure : C5GP0MGD

Detach the interior lighting (3) (at "a") ; Using tool [1].
Disengage the interior lamp (3) (partly).

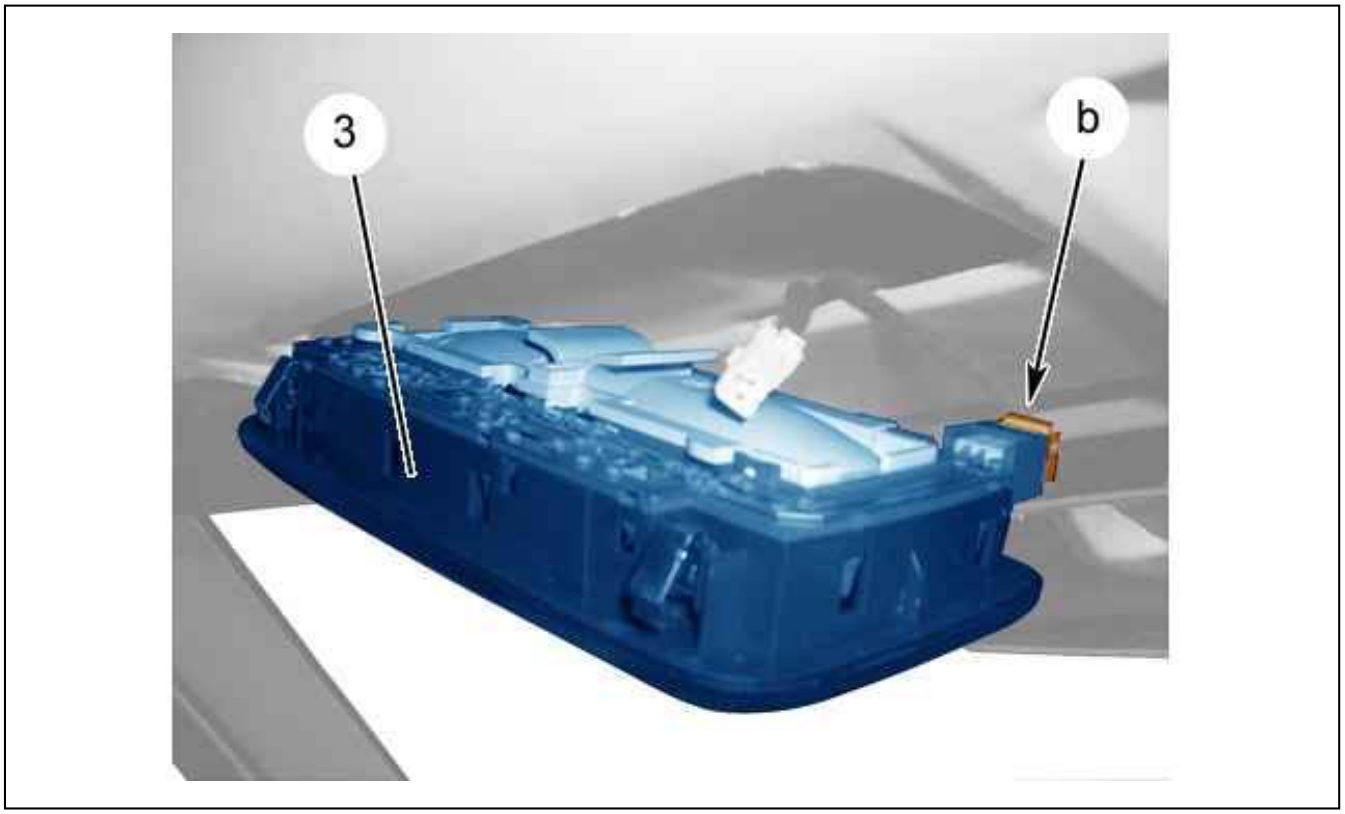

Figure : C5GP0MHD

Disconnect the connector as "b".
Remove the interior lamp (3).

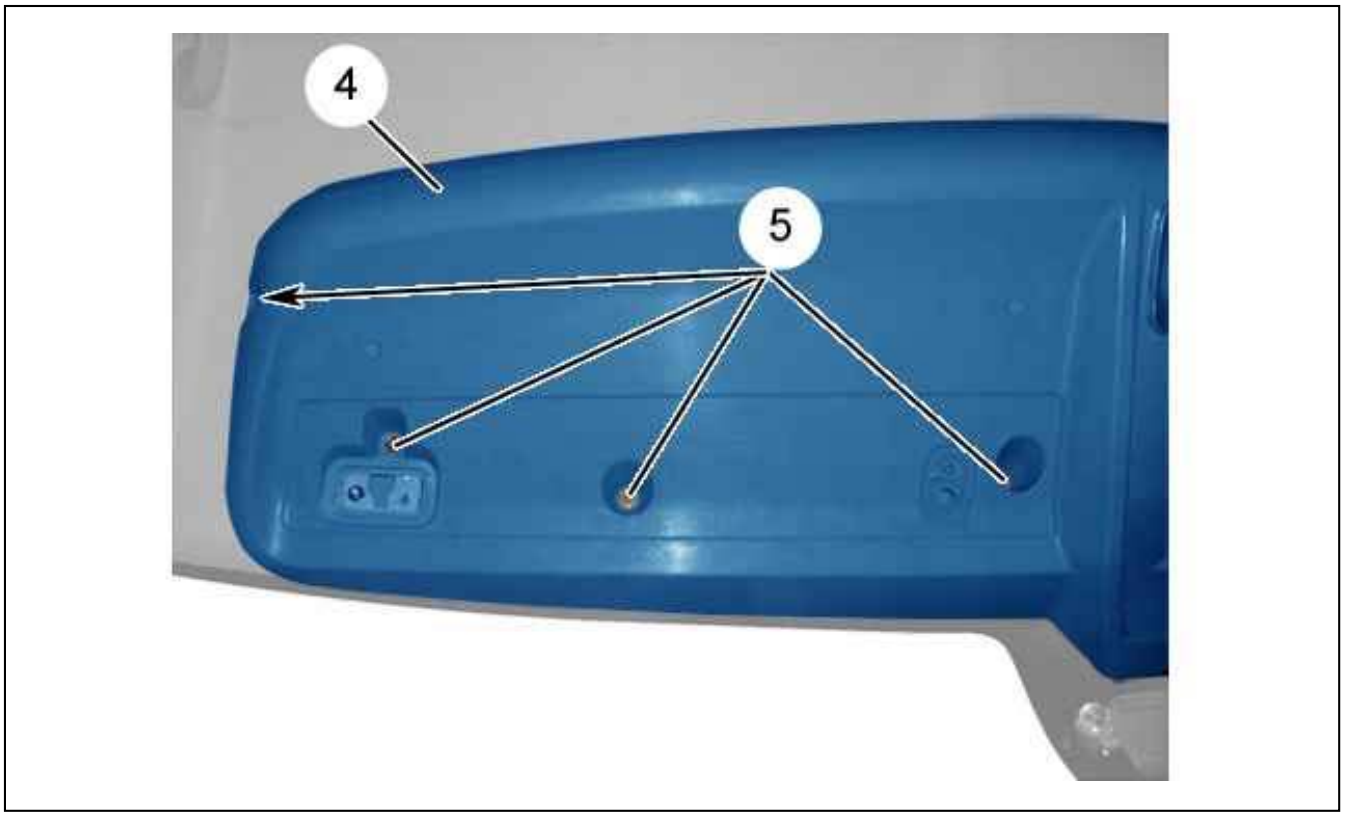

Figure : C5GP0MJD

Remove the bolts (5) (driver’s side).
Proceed in the same way for the other side.
Remove the sun visor module (4).

3. Refitting

Proceed in the reverse order to removal.
Check all the equipment works.

LOCATION : ENGINE HARNESS

CAUTION : Disconnect the battery before carrying out any work on the engine electrical harness.

1. Assembly : Engine electrical harness

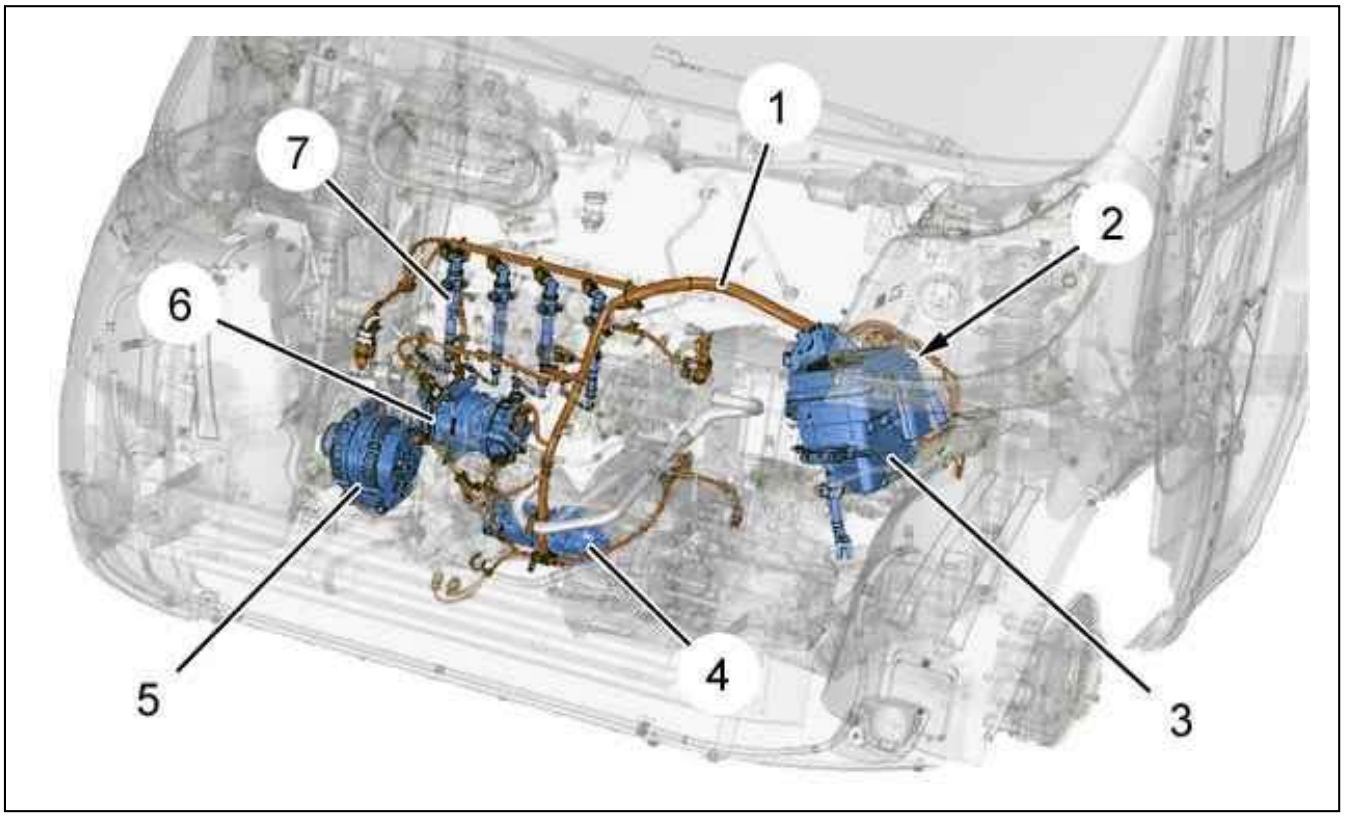

Figure : D6AB040D

(1) Engine electrical harness.
(2) Computer .
(3) Engine fusebox.
(4) Starter.
(5) alternator.
(6) Air conditioning compressor (According to equipment).
(7) diesel injectors.

2. Engine electrical harness : On engine

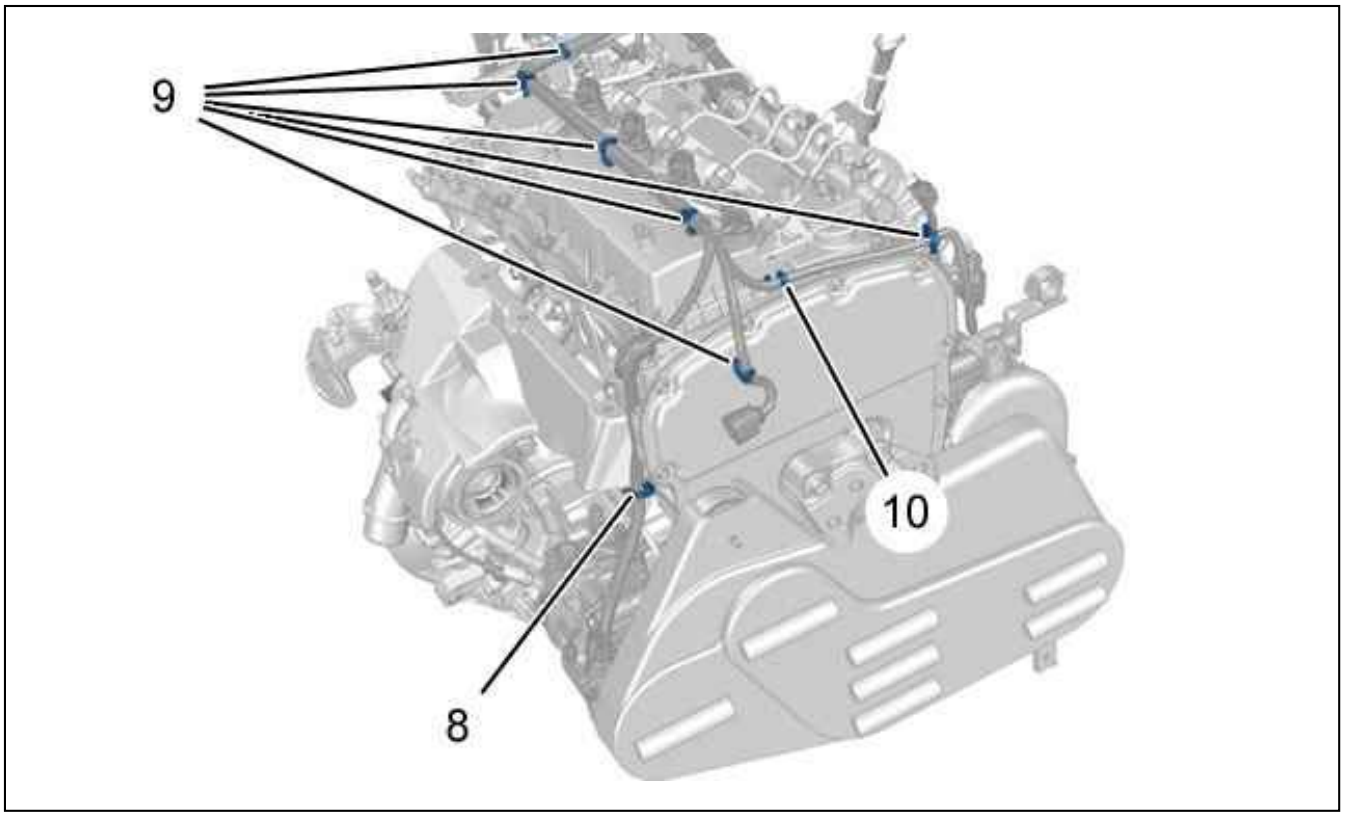

Figure : D6AB041D

(8) Clip (According to equipment).
(9) Clips.
(10) Retaining clip .

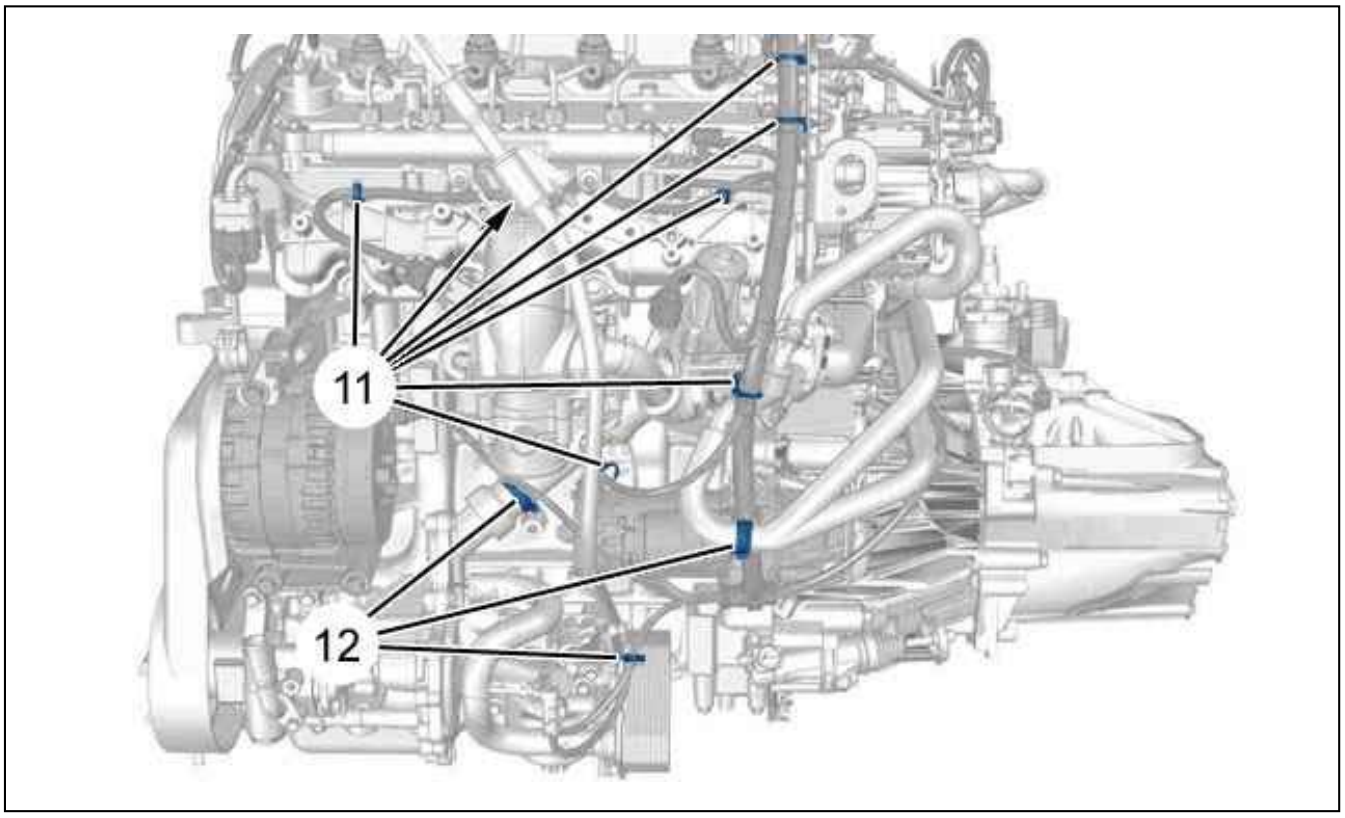

Figure : D6AB042D

(11) Clips.
(12) Collar clips.

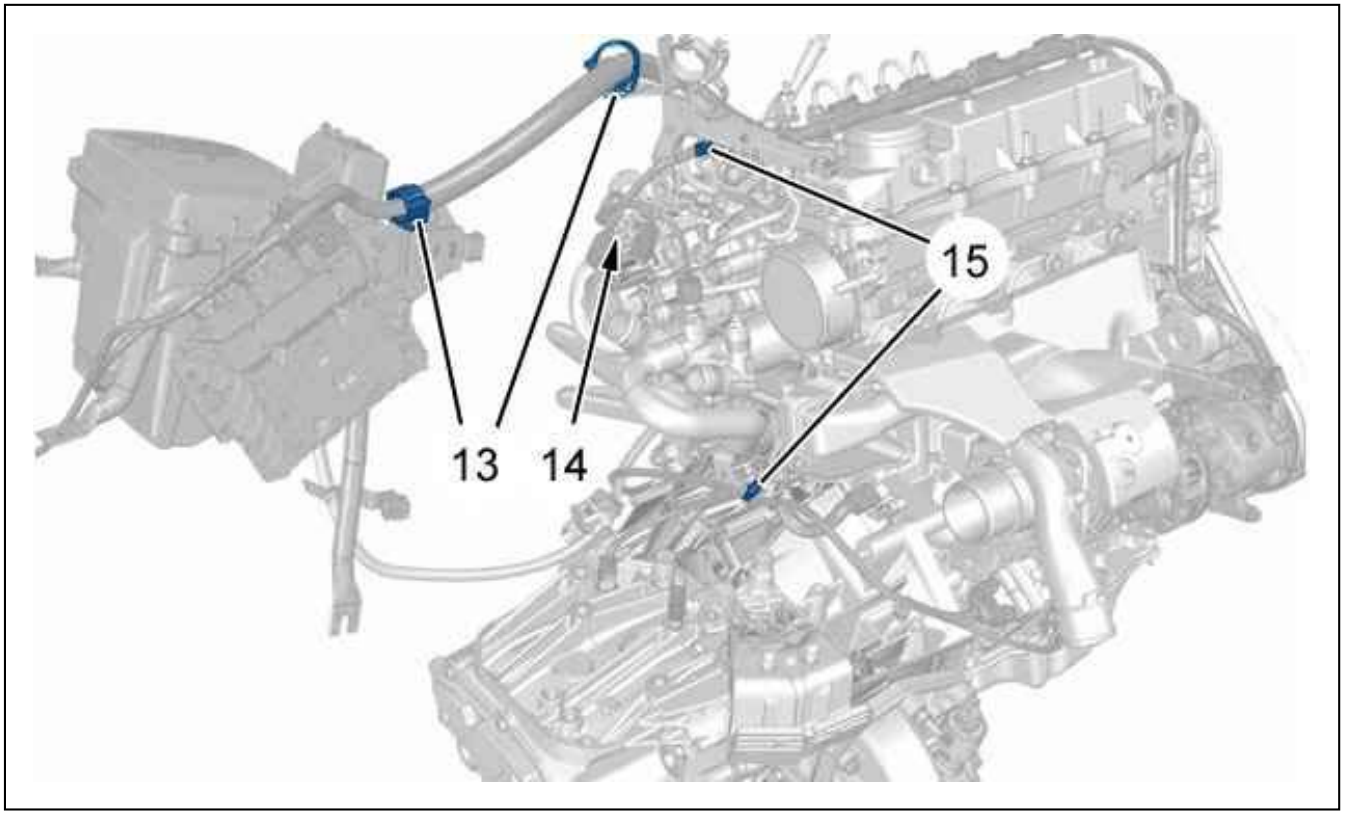

Figure : D6AB043D

(13) clips.
(14) collar clip.
(15) Clips.

REMOVING - REFITTING : PASSENGER COMPARTMENT HARNESS

ESSENTIAL : Observe the safety and cleanliness recommendations .

1. Tooling

Tool	Reference	Designation
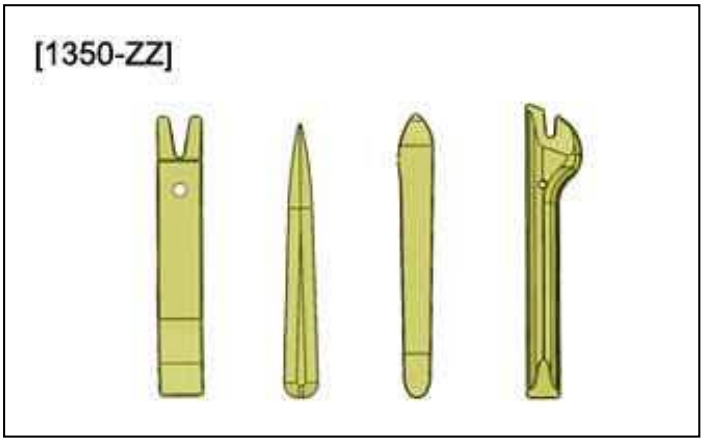 Figure : E5AG02MT	[1350-ZZ]	Stripping tools

2. Removing

Disconnect the ancillaries battery .

CAUTION : Locate the routing of the electrical harness .

CAUTION : Unlock the connectors before disconnecting them. When connecting, check the routing and clipping of the harnesses.

CAUTION : Disconnect the connectors without stressing either the harnesses or the connectors (No pulling on the harnesses is permitted).

Remove :

- The fascia
- The trims of the front door sill
- The screen pillar trim pads
- The headlining
- The front floor carpet

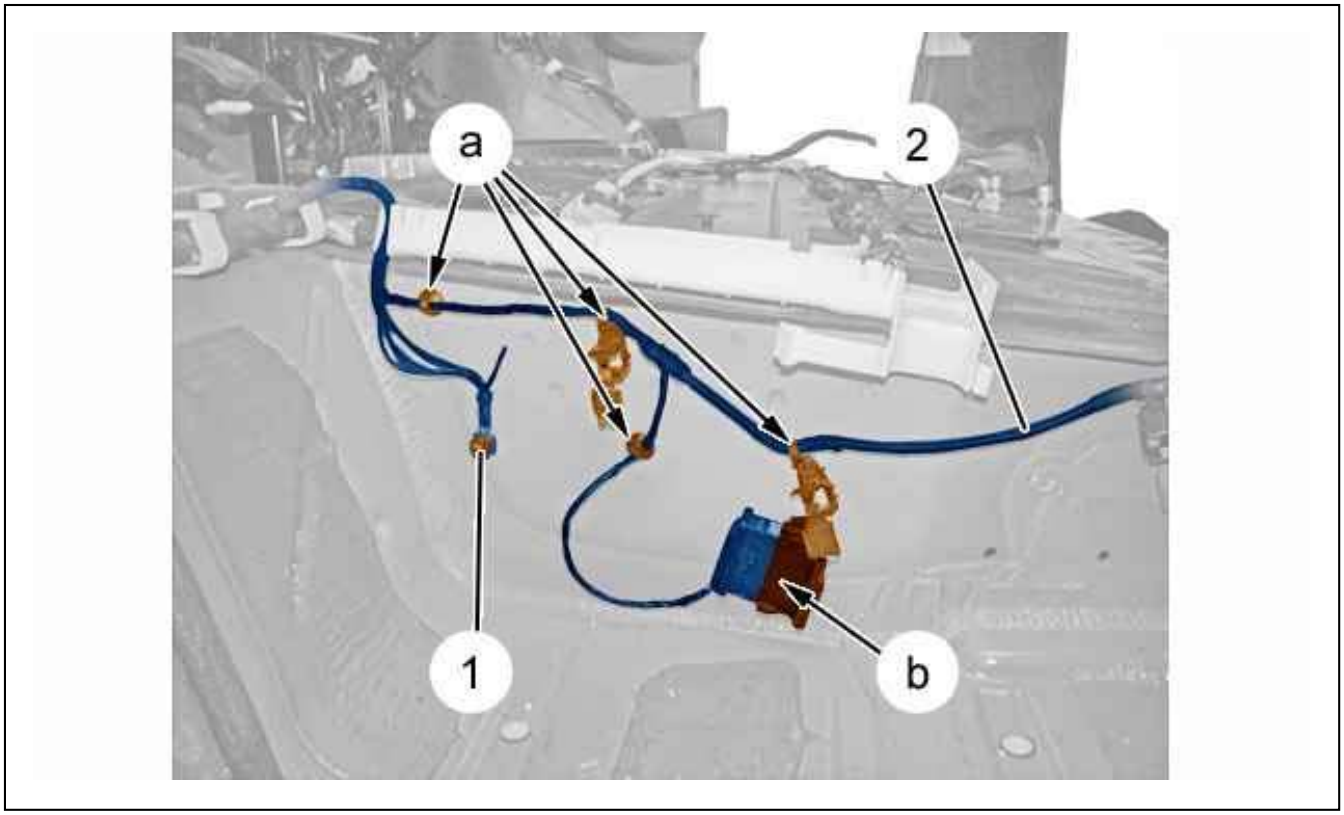

Figure : D6AG05HD

N.B. : Driver’s side.

Disconnect the lateral airbag acceleration sensor .
Remove the bolt (1).
Detach and disconnect the electrical harness (2) (at "b") ; Using tool [1350-ZZ].
Unclip then release the electrical harness (2) (at "a") ; Using tool [1350-ZZ].

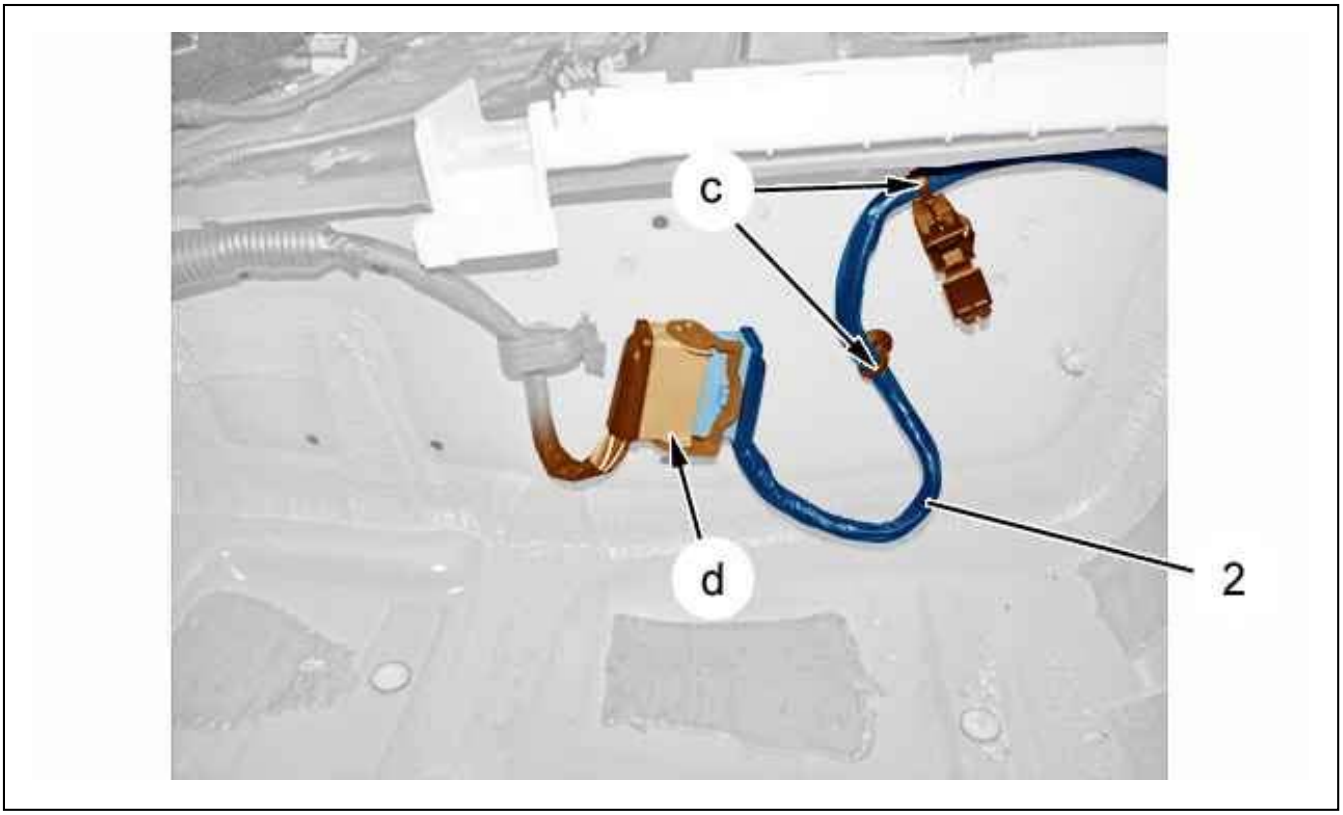

Figure : D6AG05ID

N.B. : Passenger ’s side.

Detach and disconnect the electrical harness (2) (at "d") ; Using tool [1350-ZZ].
Unclip the electrical harness (2) (at "c") ; Using tool [1350-ZZ].
Release the harness (2).

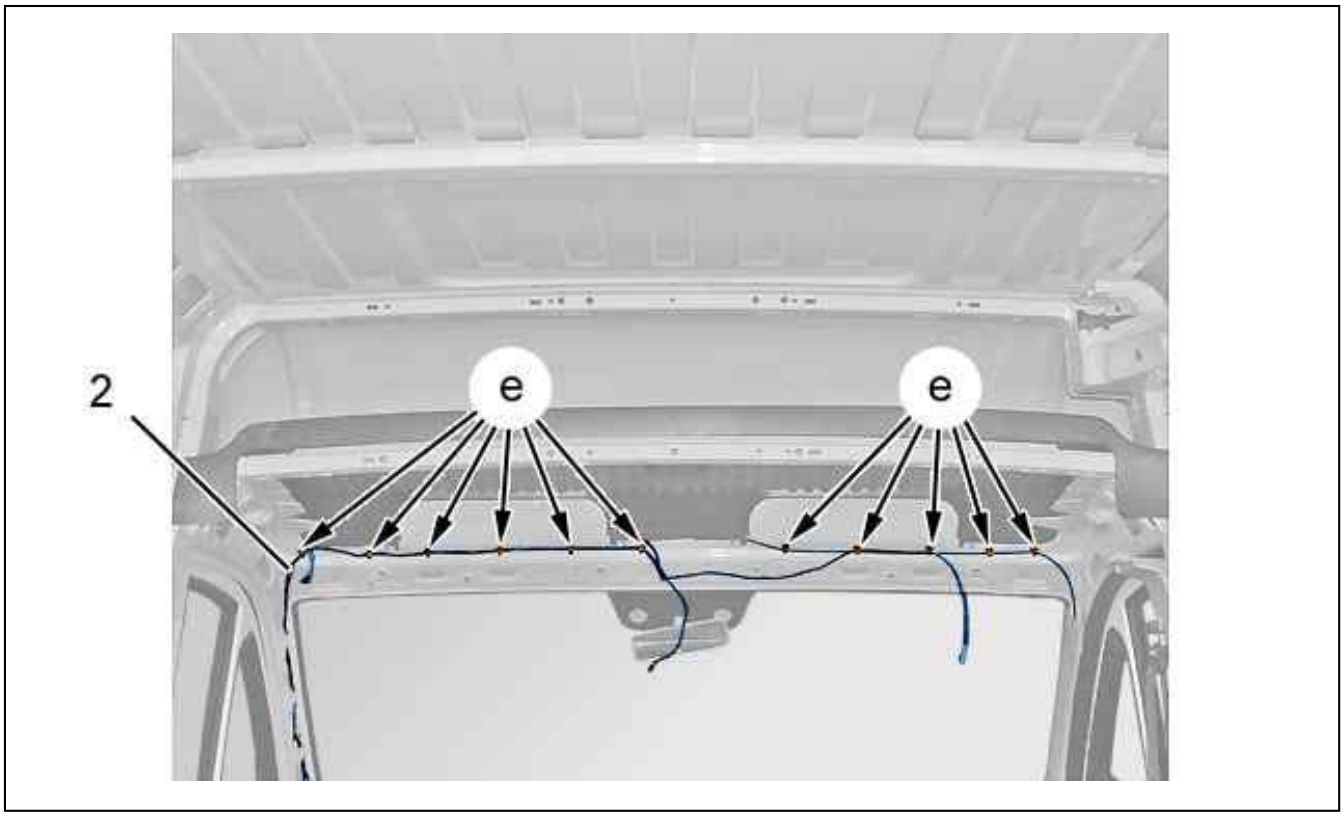

Figure : D6AG05JD

Unplug :

- The rain sensor
- The audio system antenna
- The roof lateral airbags

Unclip the electrical harness (2) (at "e") ; Using tool [1350-ZZ].
Release the harness (2).

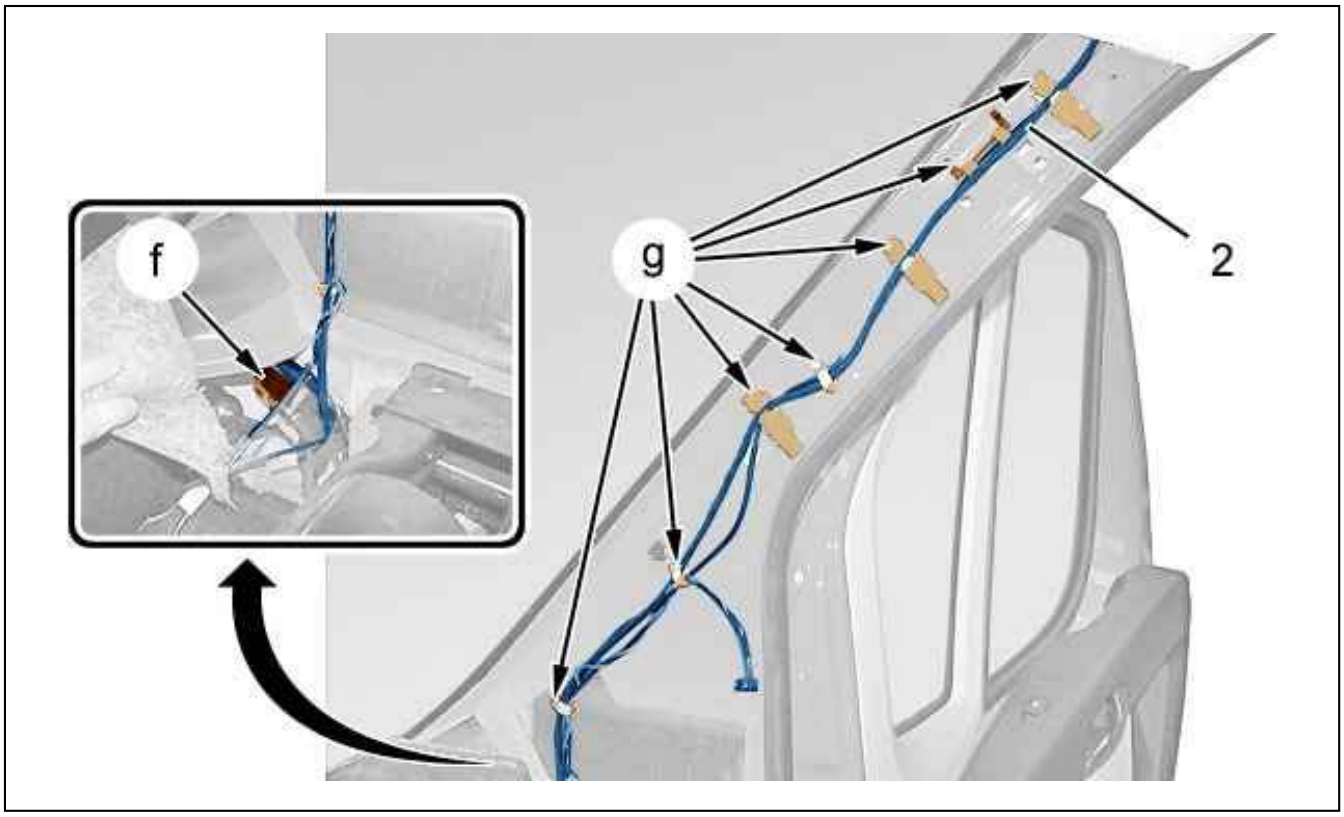

Figure : D6AG05KD

N.B. : Symmetrical operations.

Unclip then release the electrical harness (2) (at "g") ; Using tool [1350-ZZ].
Disconnect the connector (at "f").
Release the harness (2).

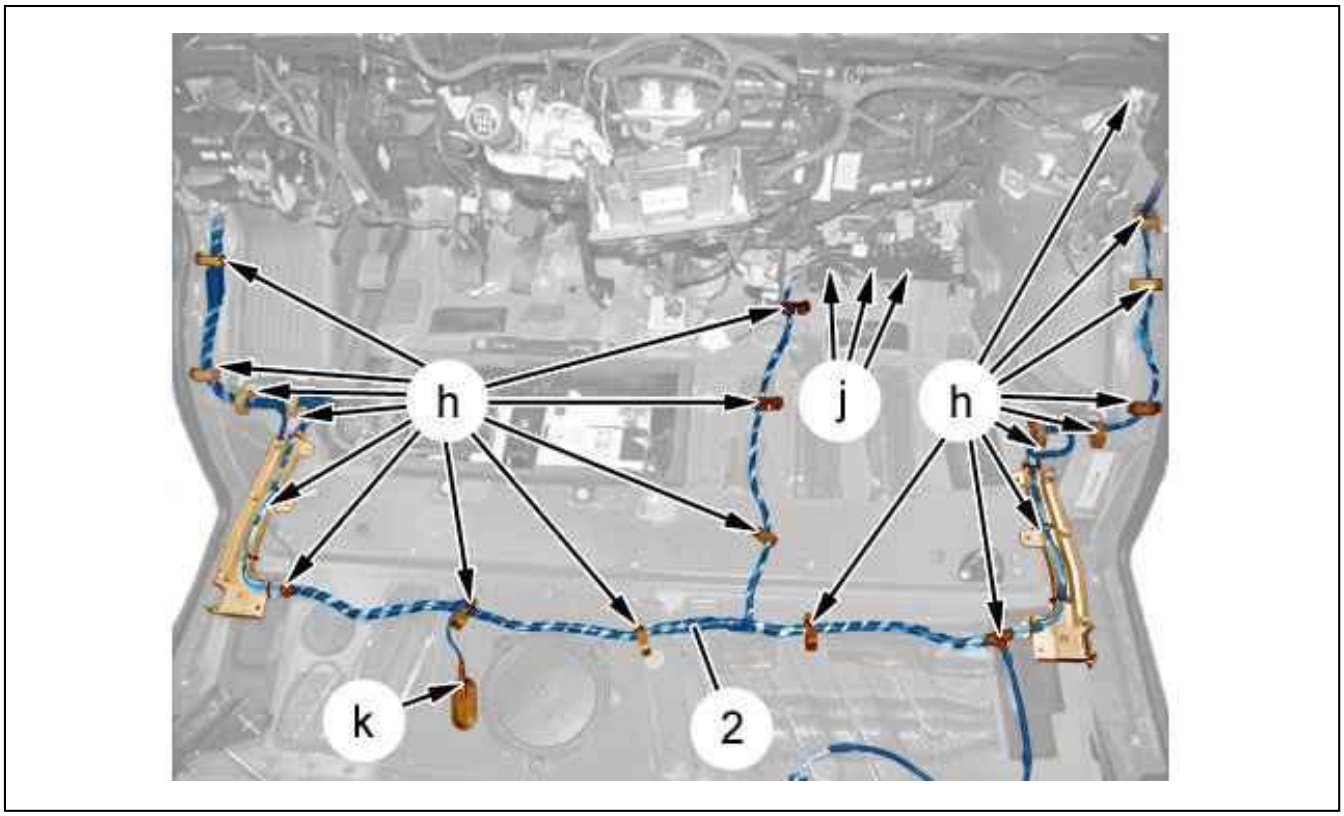

Figure : D6AG05LD

Unplug :

- The Built-in Systems Interface
- The central control unit
- The battery positive cable
- The connectors (at "j") (according to equipment)

Unclip and disconnect (at "k") ; Using tool [1350-ZZ].
Unclip the electrical harness (at "h") ; Using tool [1350-ZZ].
Disengage then remove the electrical harness (2).

3. Refitting

CAUTION : Replace : The clips securing the electrical harness (2), and any fastenings that are faulty.

CAUTION : Refits the electrical harness following the routing noted before removal.

Refit the electrical harness (2).
Clip :

- The clips retaining the electrical harness (2)
- The wiring harness clamp clips (2)

Connect the connectors.
Proceed in the reverse order to removal.
Reconnect the ancillaries battery.
Check all the equipment works.

REMOVING - REFITTING : REAR ELECTRICAL HARNESS

ESSENTIAL : Observe the safety and cleanliness recommendations .

1. Tooling

Tool	Reference	Designation
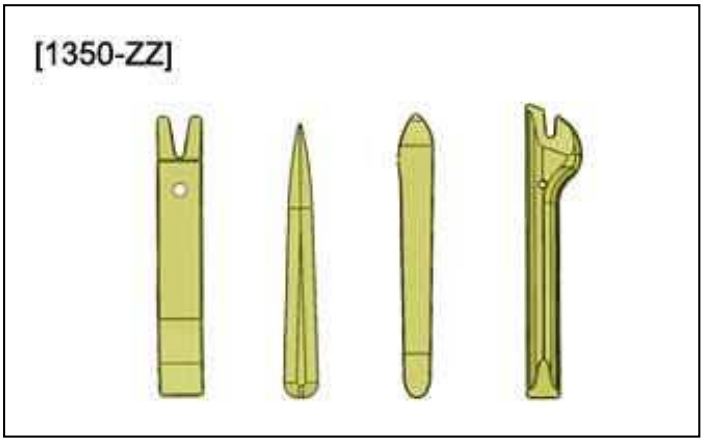 Figure : E5AG02MT	[1350-ZZ]	Stripping tools

2. Identification

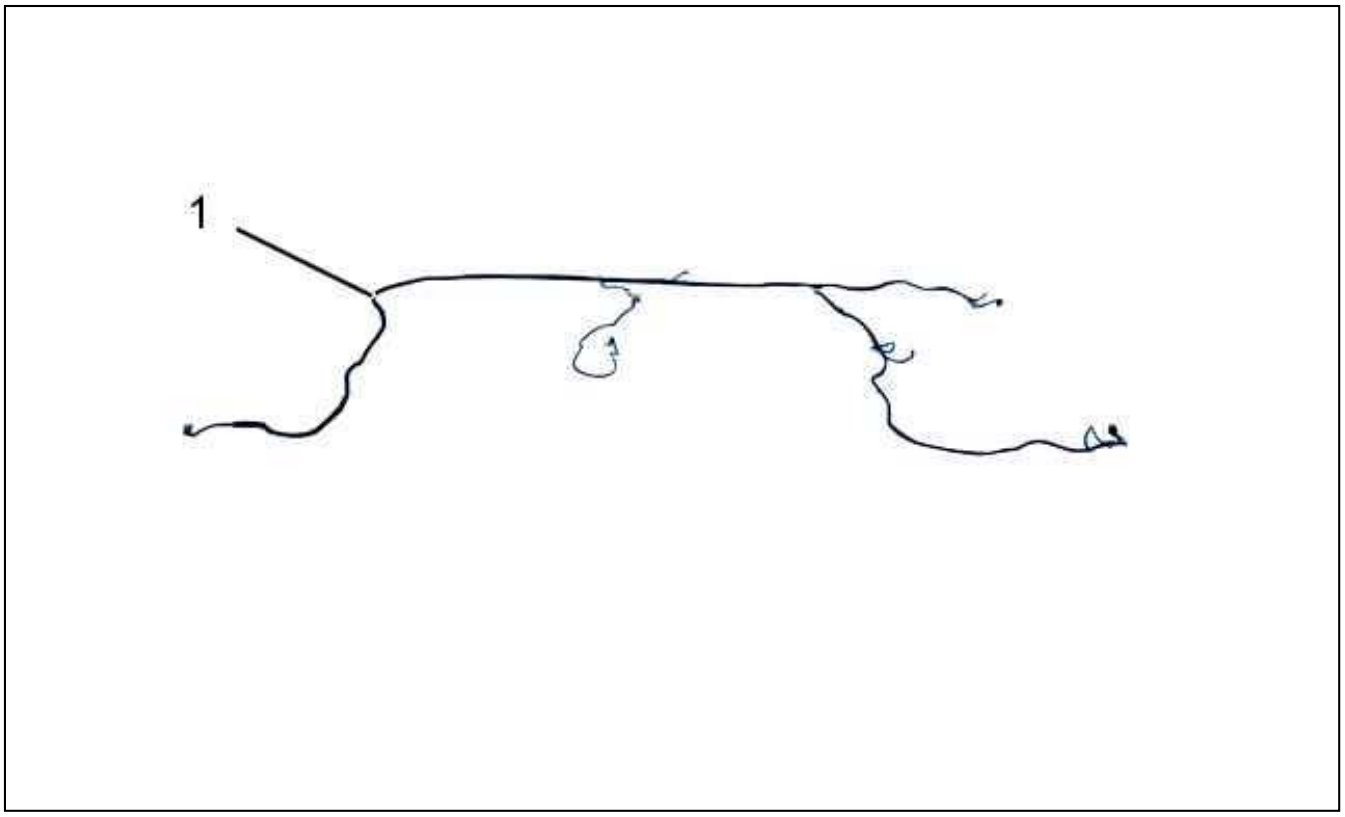

Figure : D6AG05MD

(1) Rear electrical harness.

3. Removing

Disconnect the ancillaries battery .

CAUTION : Note the routing of the passenger compartment harness.

CAUTION : Unlock the connectors before disconnecting them. When connecting, check that the electrical connecto adaptors and sleeves fit correctly.

CAUTION : Disconnect the connectors without putting stress on the electrical adaptors or connectors (Take care not to pull or exert any other stress on the electrical harnesses and connectors).

Remove :

- The centre pillar lower trim
- The door pillar upper trim
- The door sill trim

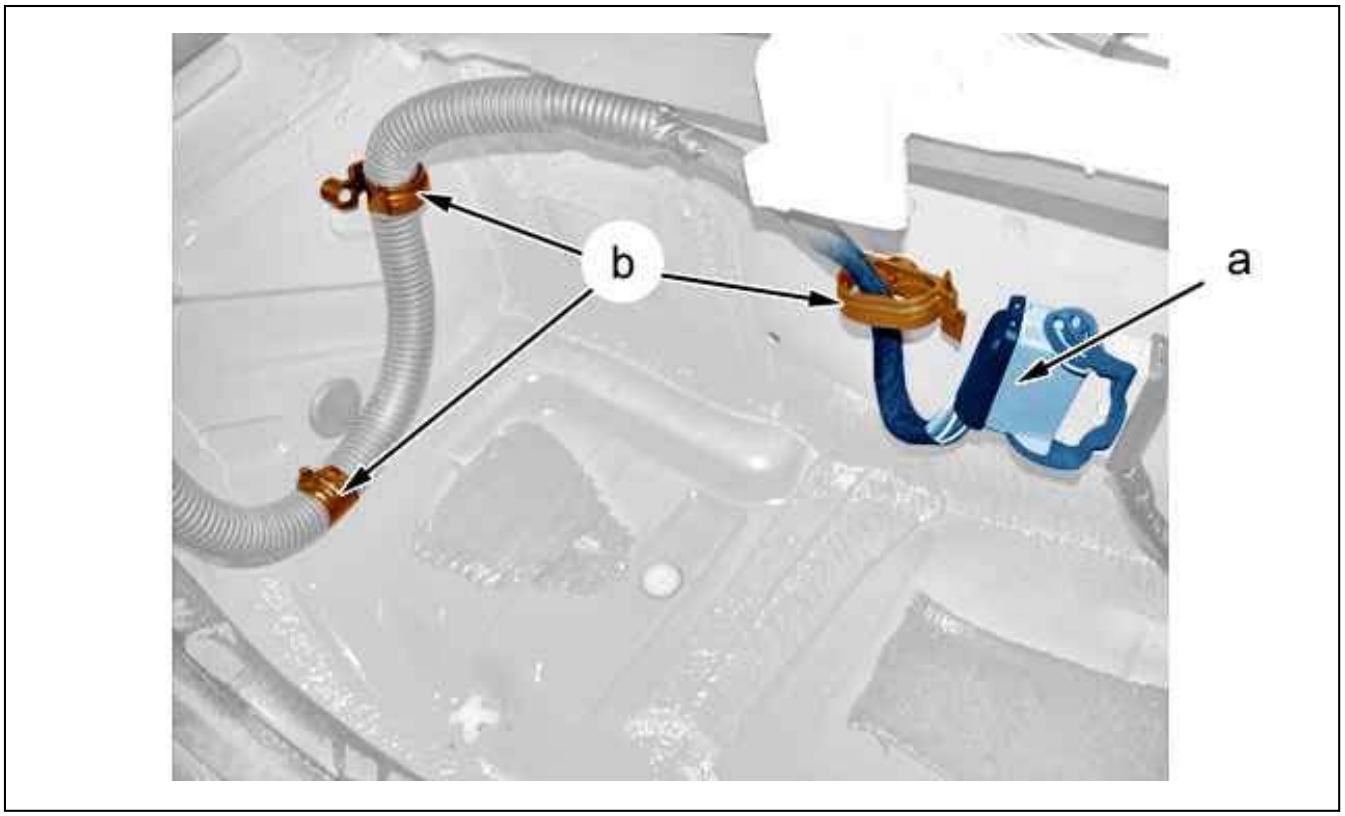

Figure : D6AG05ND

Disconnect the connector (at "a").
Unclip the cable tie fastenings (at "b") ; Using tool [1350-ZZ].

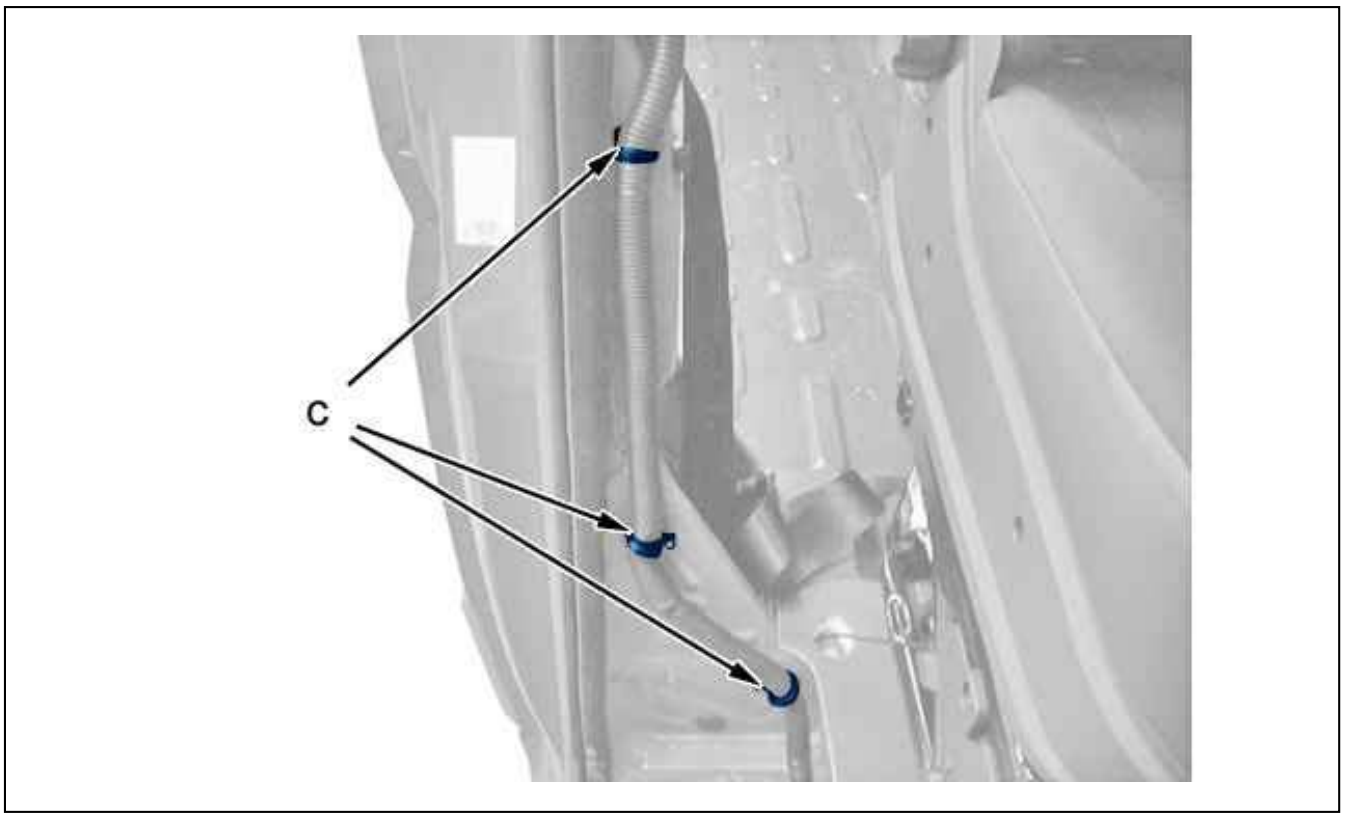

Figure : D6AG05OD

Unclip the cable tie fastenings (at "c") ; Using tool [1350-ZZ].

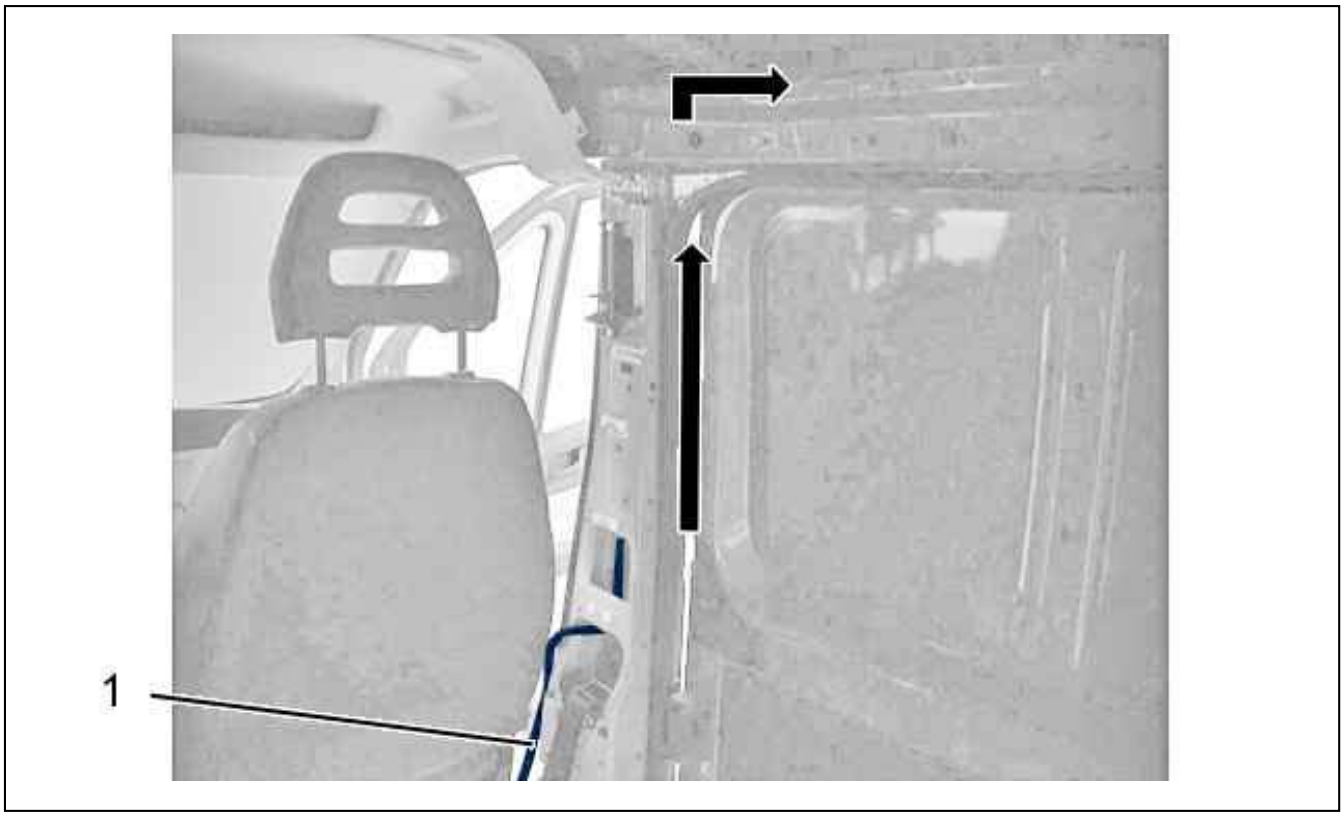

Figure : D6AG05PD

Release the harness (1) (rear) In the direction of the arrow .
Open the sliding side door.

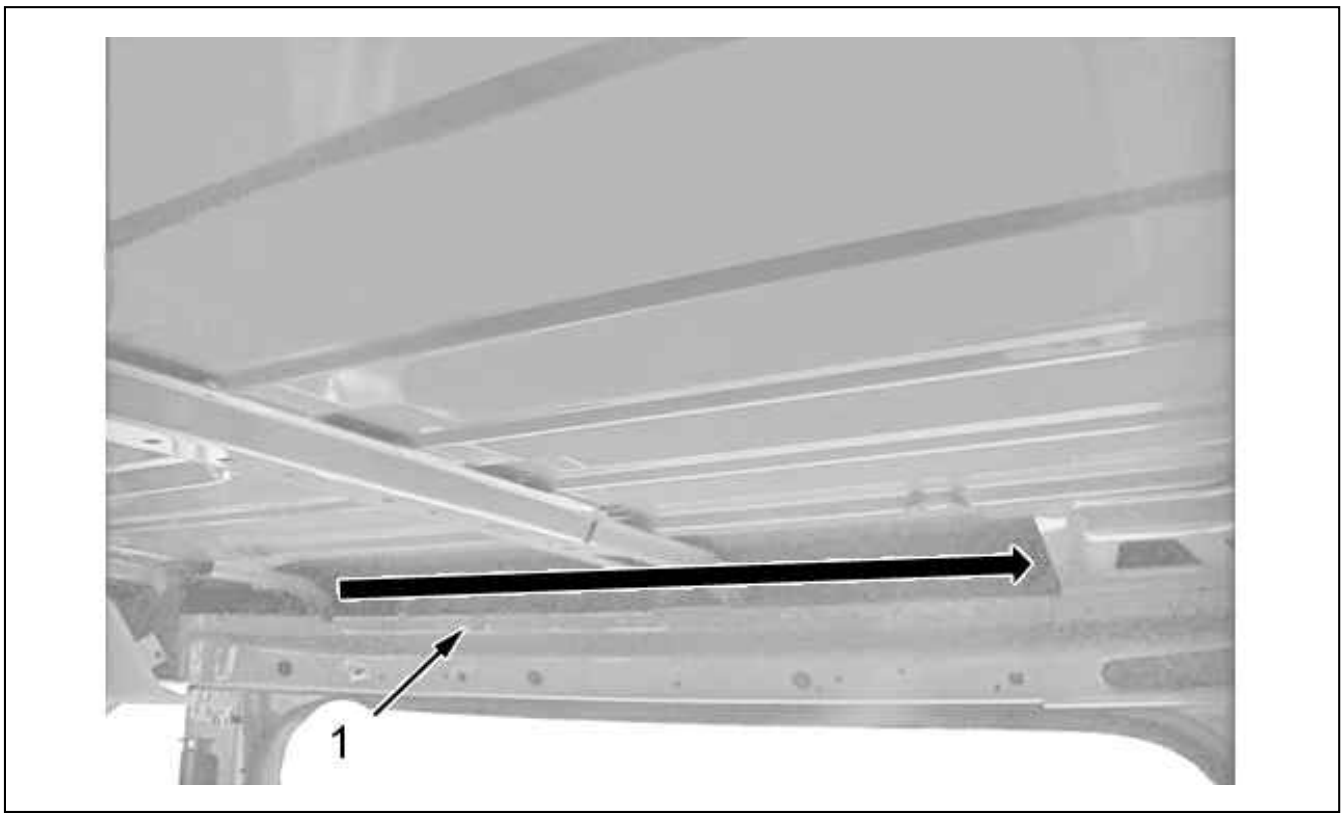

Figure : D6AG05QD

Release the harness (1) (rear) (following the arrow).

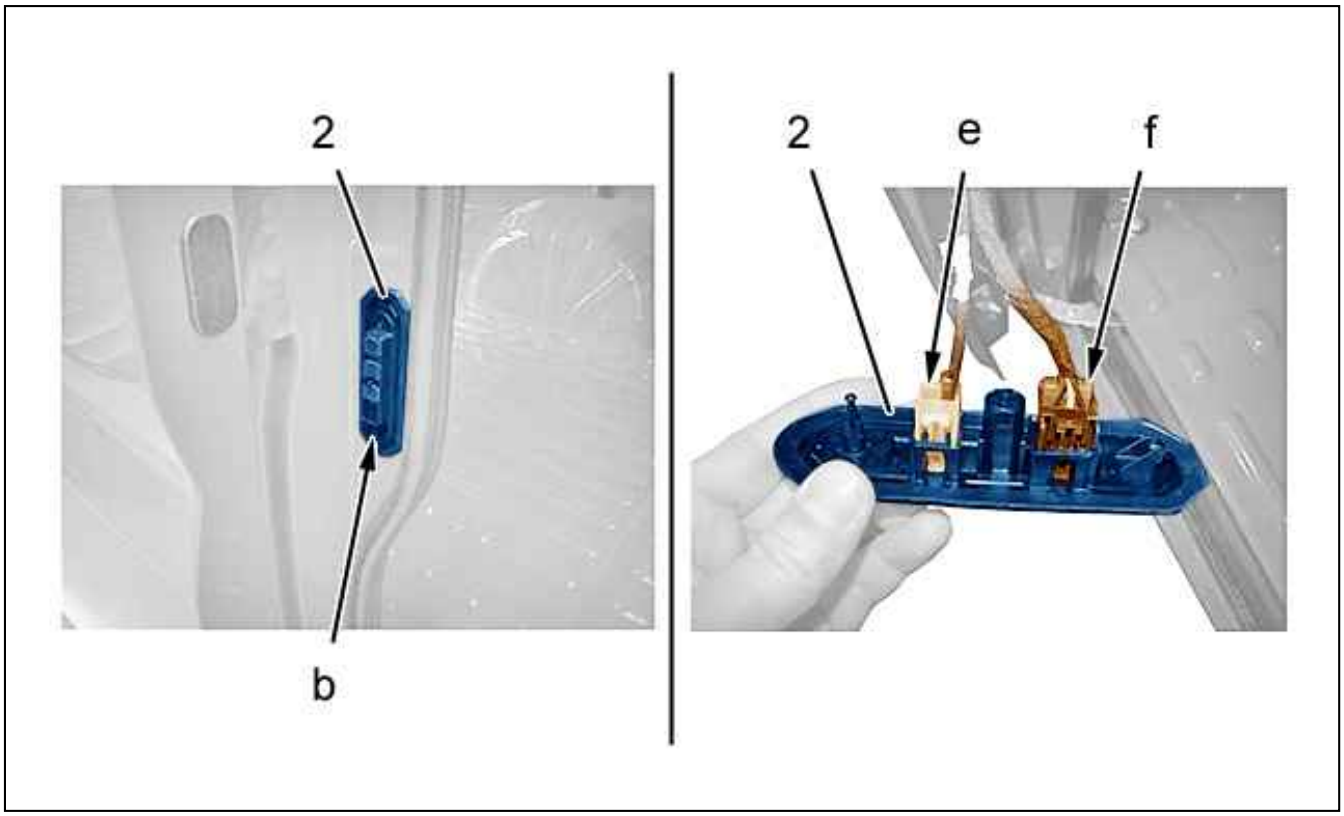

Figure : D6AG05RD

Unclip the pin (at "d") ; Using tool [1350-ZZ].
Remove the switch of the sliding side door (2).
Unplug :

- The connector (at "e")
- The connector (at "f")

Release the switch of the sliding side door (2).

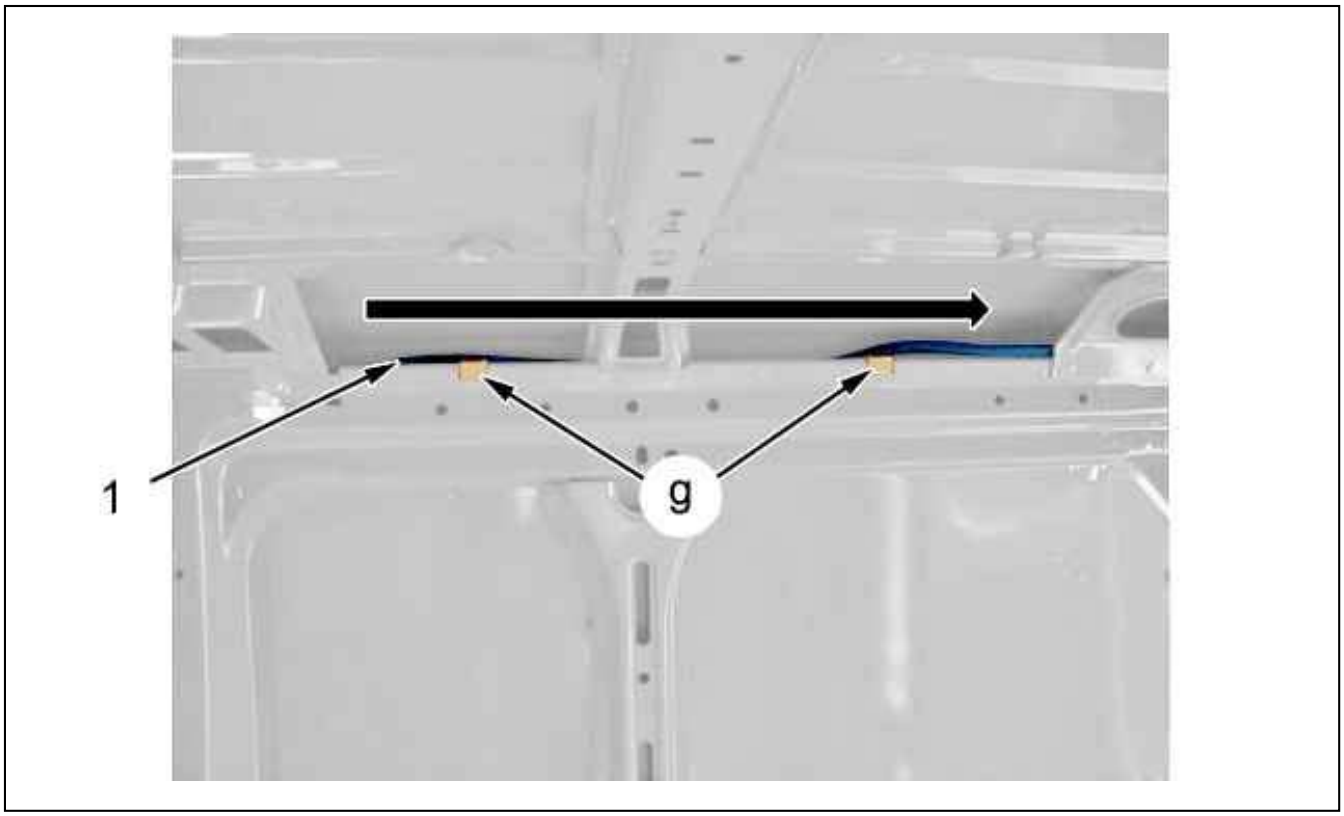

Figure : D6AG05SD

Unclip the cable tie fastenings (at "g") ; Using tool [1350-ZZ].
Release the harness (1) (rear) (following the arrow).

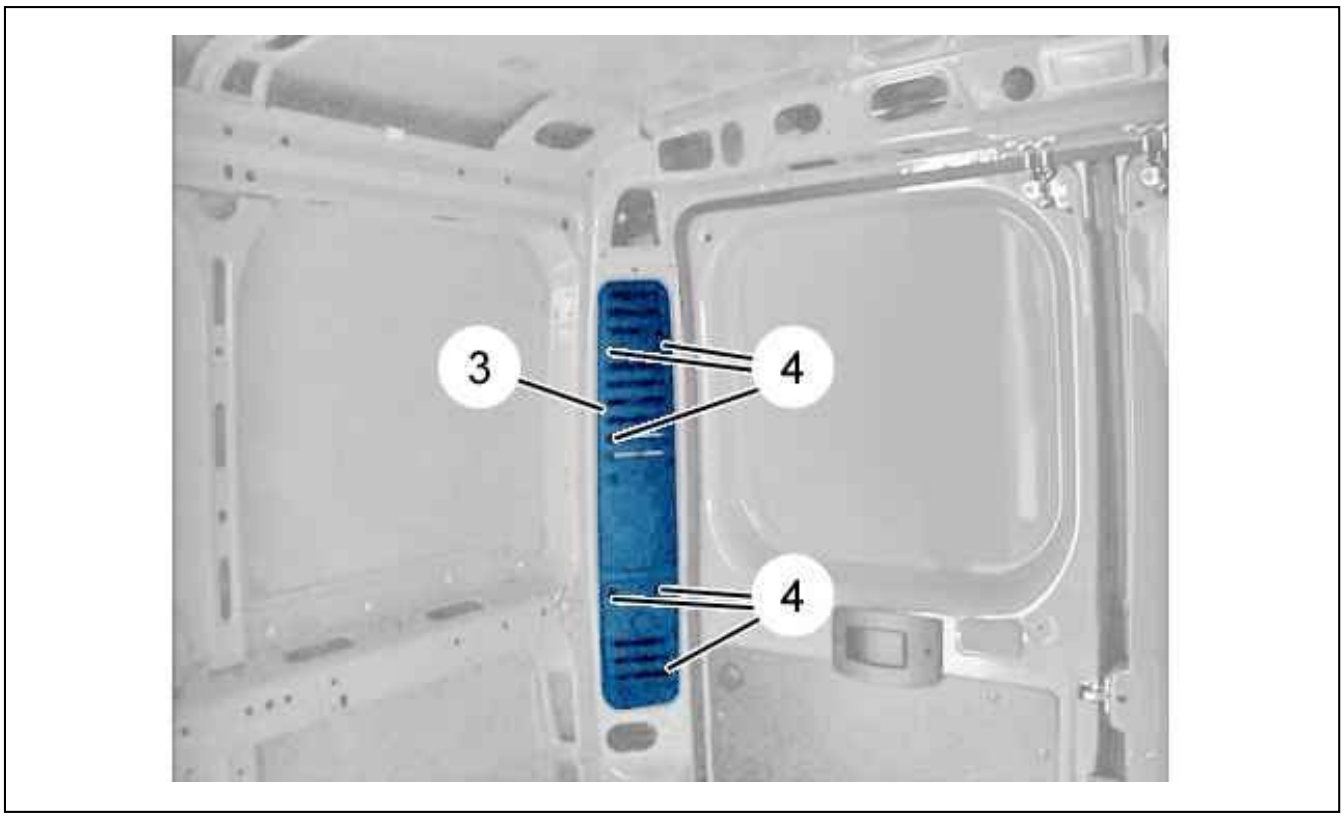

Figure : D6AG05TD

Remove :

- The bolts (4)
- The rear pillar trim (3)

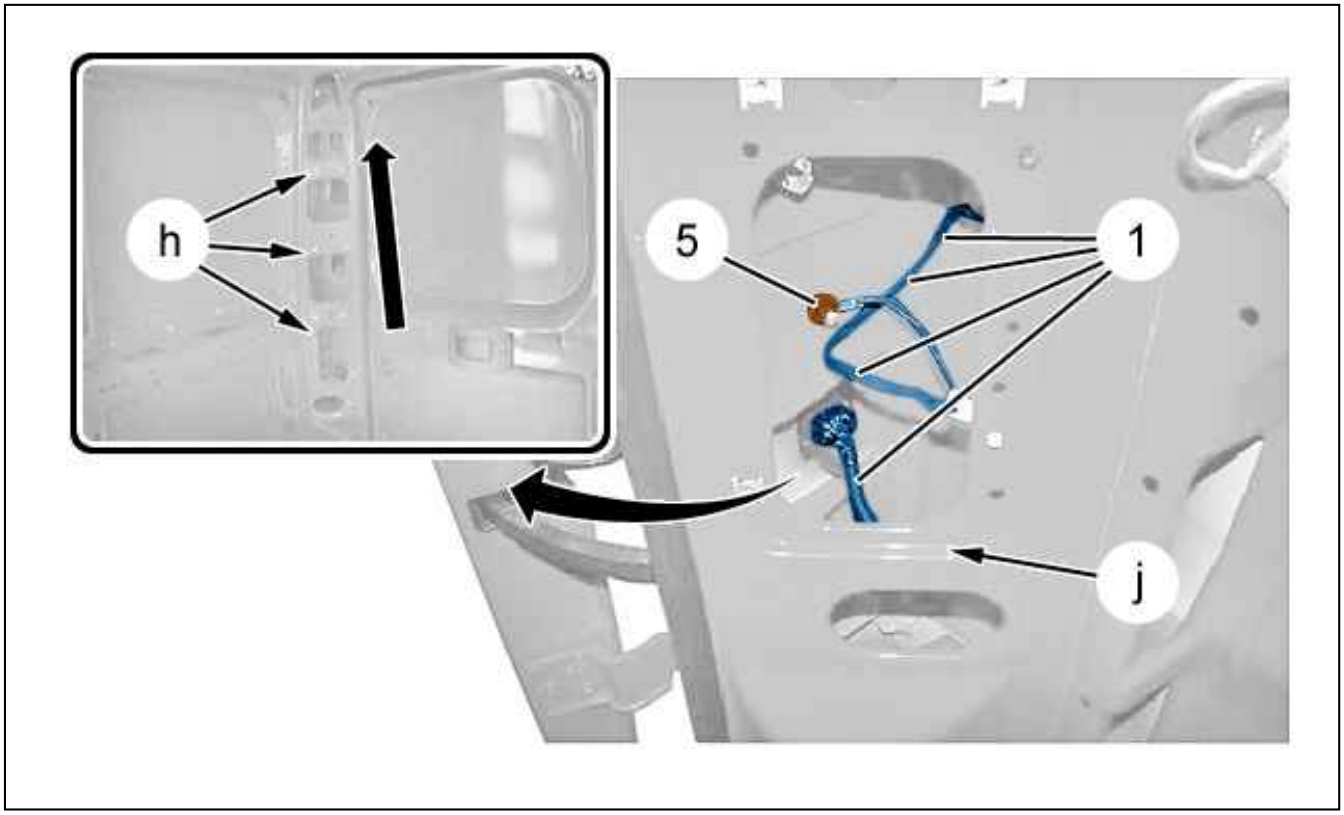

Figure : D6AG05UD

Unclip the cable tie fastenings (at "h") ; Using tool [1350-ZZ].
Disconnect the connector (at "j").
Remove the nut (5).
Release the harness (1) (rear) (following the arrow).

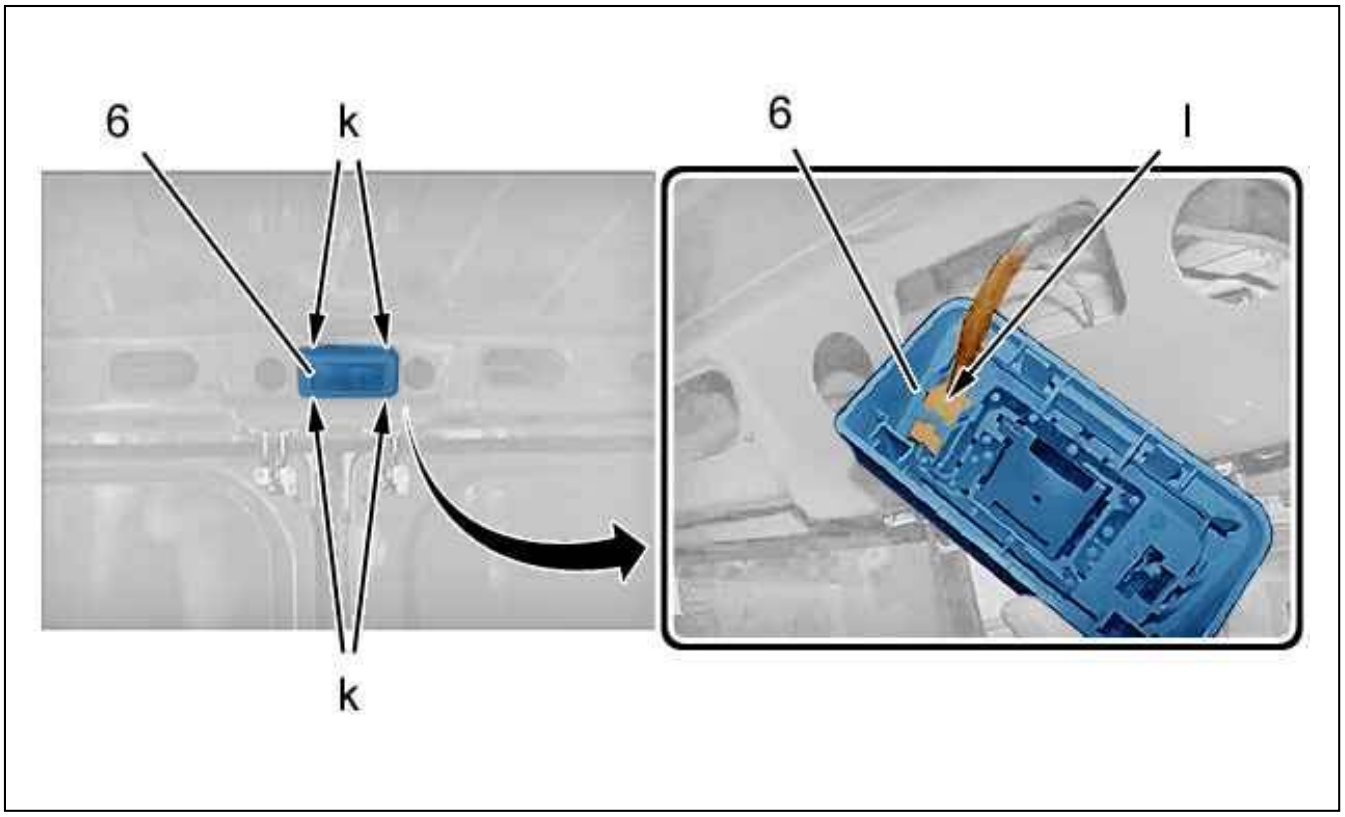

Figure : D6AG05VD

Detach the rear door lamp (6) (at "l") ; Using tool [1350-ZZ].
Disconnect the connector (at "m").

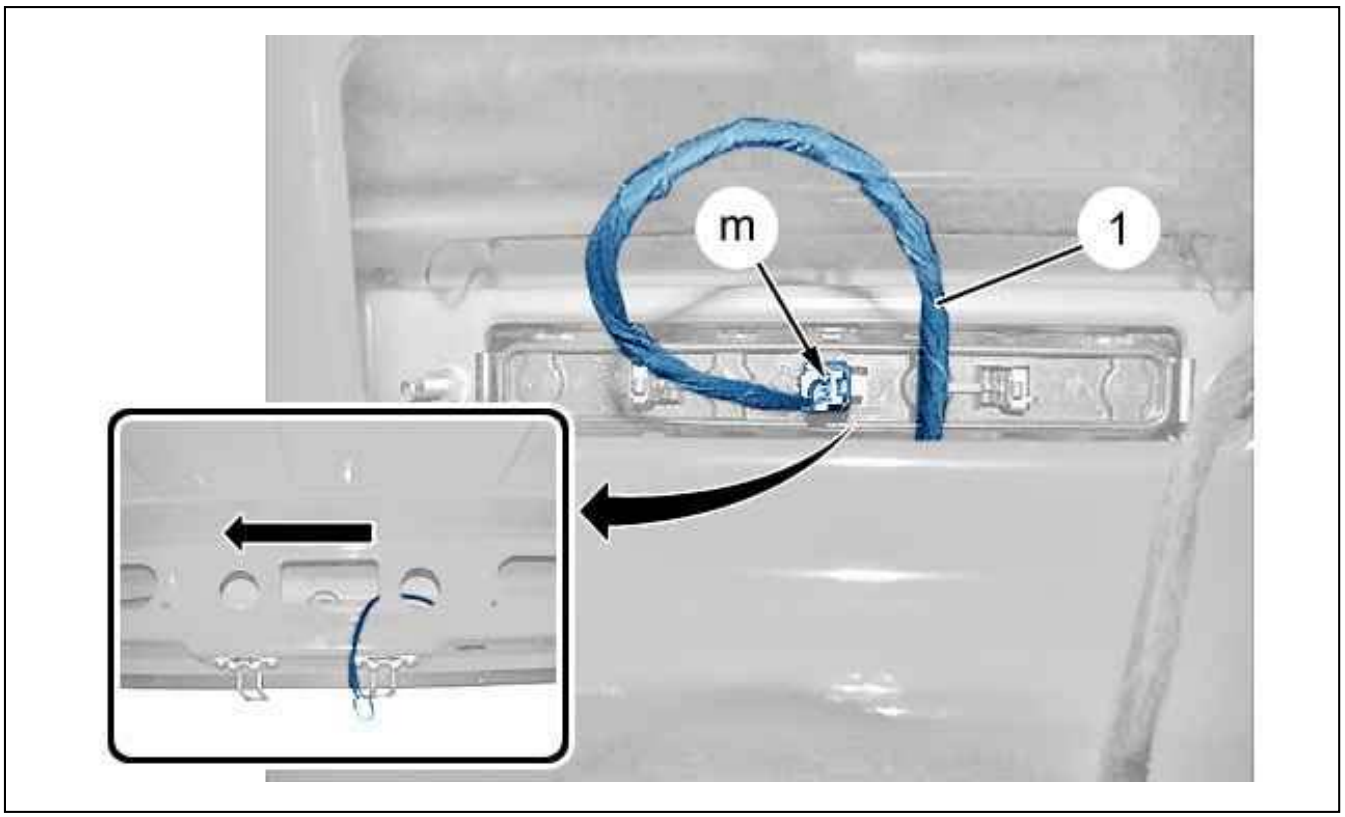

Figure : D6AG05WD

Disconnect the connector (at "m") ; Using tool [1350-ZZ].

Release the harness (1) (rear) (following the arrow).
Remove the electric harness (1) (rear).

4. Refitting

ESSENTIAL : Replace any electrical harness clips and fastenings that are faulty (1) (rear).

ESSENTIAL : Refit the electrical harness (1) in accordance with the routing noted prior to removal.

Refit the electrical harness (1) (rear).
Clip :

- The fastenings of the electrical harness (1) (rear)
- The wiring harness clamp clips (1) (rear)

Connect the connectors .
Continue the fitting operations in the reverse order to removal.
Reconnect the ancillaries battery.
Check all the equipment works.

REMOVING - REFITTING : DASHBOARD HARNESS

ESSENTIAL : Observe the safety and cleanliness recommendations .

1. Tooling

tool	Reference	Description
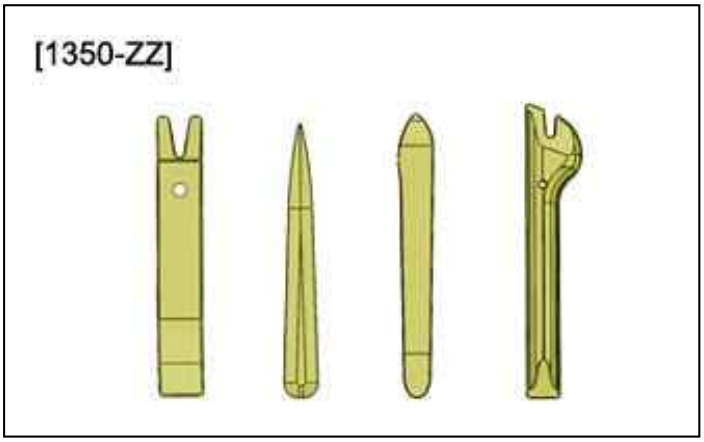 Figure : E5AG02MT	[1350-ZZ]	Stripping tools

2. Removing

Disconnect the ancillaries battery .
Remove the fascia .
Disconnect the connectors (Built-in systems interface).

CAUTION : Locate the routing of the electrical harness .

CAUTION : When disconnecting, ensure that the connectors are released correctly ; When connecting, check the routing and clipping of the harnesses.

CAUTION : Disconnecting the connectors has to be done without touching the electrical harnesses or the connectors (No pulling of the harnesses is permitted).

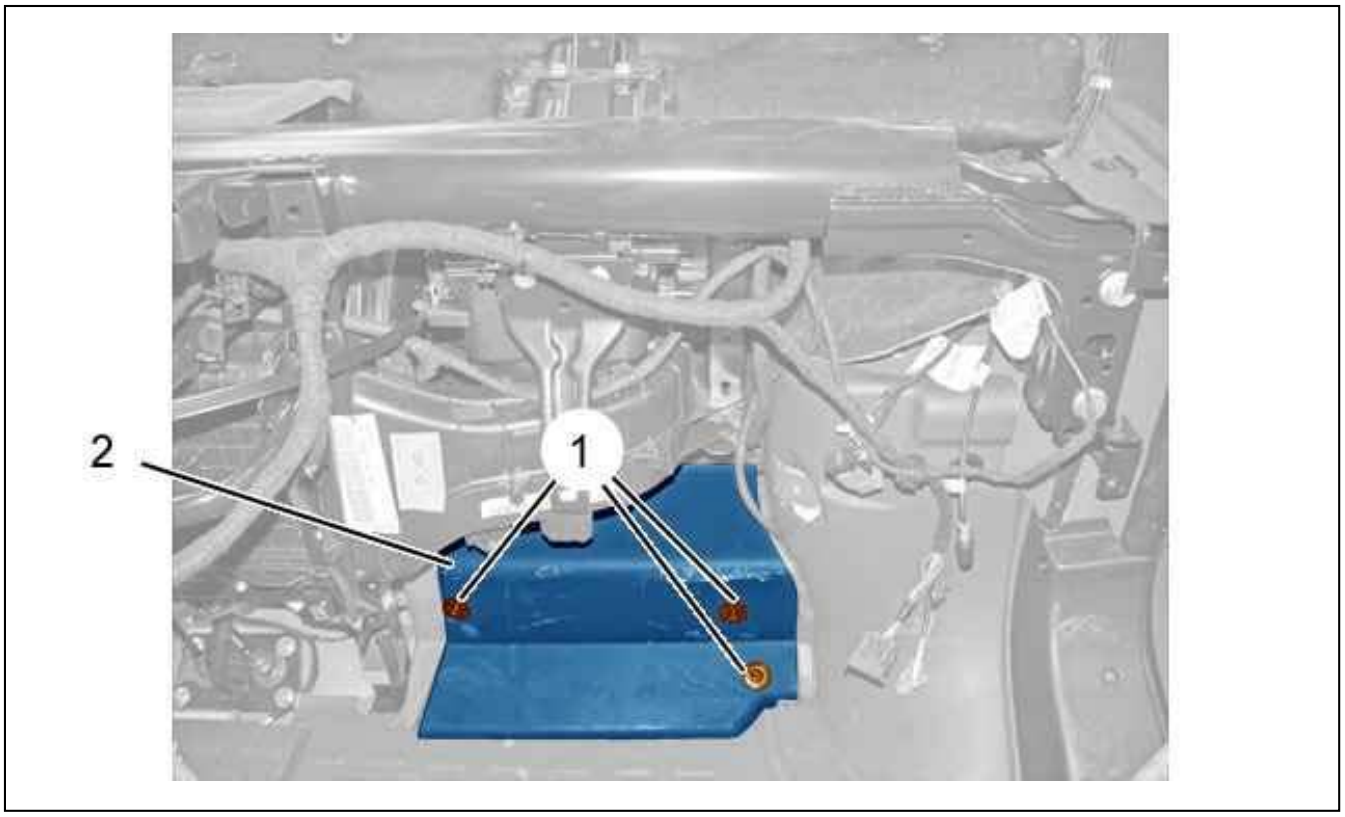

Figure : D6AG05XD

Unclip the fixings (1) ; Using tool [1350-ZZ].
Remove the trim (2).

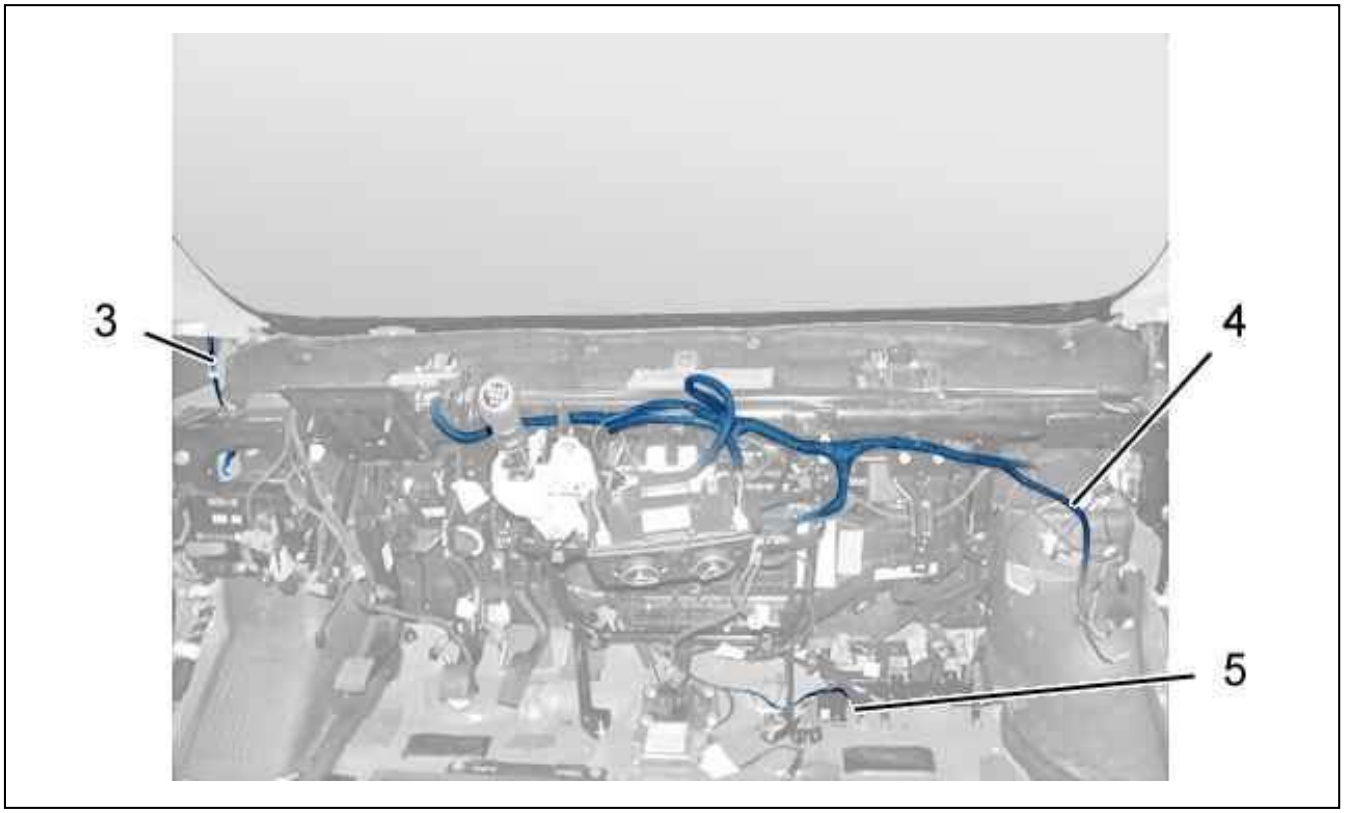

Figure : D6AG05YD

Disconnect the connectors of the electrical harness (4).

Unclip ; Using tool [1350-ZZ] :

- The clips retaining the electrical harness (4)
- The securing straps of the electrical harness (4)

Remove :

- The earth leads (3), (5)
- The electrical harness (4)

3. Refitting

CAUTION : Always replace : The securing straps of the electrical harness (4) ; Damaged clips.

CAUTION : Refit the electrical harness (4) in accordance with the routing noted prior to removal.

Refit :

- The electrical harness (4)
- The earth leads (3), (5)

Clip :

- The clips retaining the electrical harness (4)
- The securing straps of the electrical harness (4)

Connect the electrical harness (4) connectors.
Proceed in the reverse order to removal.
Reconnect the ancillaries battery.
Check the operation of the equipment.

REPAIR : ELECTRICAL HARNESSES

The aim of this document is to define the rules for carrying out repairs or work on the electrical harnesses.
This document consists of 2 main parts :

- The first part describes the general repair methods
- The second part describes the circumstances of use of these methods in relation to the failures detected

1. Recommendations prior to carrying out the operation

The repairs must only be carried out by trained and authorised personnel.

ESSENTIAL : Disconnect the battery before carrying out any repairs or work on an electrical harness (electric battery, ancillaries battery, traction battery, etc.).

ESSENTIAL : Take into account the manufacturer's instructions before carrying out any work on the pyrotechnic functions (available on the computer equipment or on the marque's technical information internet site.

2. Tooling

tool	Reference	Designation
[1296]  Figure : E5AMXYRT	[1296]	Connection repair kit
[2005] 	[2005]	Warm air generator

Figure : E5AMXYST		
 Figure : E5AMXYTT	[1296-S]	Wire strippers

3. Terminology

3.1. Usable wire

A wire is usable if its length is sufficient to permit repair without causing any tensile stress which could alter the sealing c the connection, the crimping resistance or result in a break over time (too taut).

N.B. : The wire is usable if its graspable length is more than 30 mm.

3.2. Unusable wire

A wire is unusable if its length is not sufficient to permit repair without causing tensile stress which could alter the sealin of the connection or result in a break over time (too taut).
A wire is unusable if it is stripped, pulled out, crushed over a considerable length or burnt.

N.B. : The wire is unusable if its graspable length is less than 30 mm.

4. General rules

General rules to be heeded :

- The repairs must only be carried out by trained and authorised personnel
- After repair, all of the electrical functions affected by the harness must be checked
- The connection of 2 conductors by tin soldering is prohibited (rigidity, breakage)
- The optical fibres and the screened wires must always be replaced if they are bent or broken
- After analysing the fault, eliminate its cause
- The twisted wires can be repaired

ESSENTIAL : Take into account the manufacturer's instructions before carrying out any work on the pyrotechnic functions (available on the computer equipment or on the marque's technical information internet site.

ESSENTIAL : All repairs or work on electrical harnesses are carried out with the battery disconnected (Including the service battery if present).

5. Repair procedures

5.1. Method for checking a wire

The aim of the wire checking method is to determine whether the repair can be carried out directly on the damaged wire or whether part of the wire must be replaced.
A wire is declared unusable in the following cases :

- The wire is not of sufficient length to permit repair without causing traction stresses which could alter the sealing of the connection or breakage over time (too taut)
- The wire is stripped, pulled out or crushed over a considerable length
- The wire is burnt
- In the case of a wire leaving an overmoulded connector, if the remaining usable length of wire is less than 30 mm

N.B. : In other cases, the wire is declared usable.

5.2. Method for selecting a wire

If a wire is unusable, the choice of the new wire to be used to carry out the repair must conform to the following characteristics :

- Cross-section of the wire
- Colour of the sleeve

ESSENTIAL : The cross-section of the wire must be equal to or larger than the initial cross-section, but never smaller.

N.B. : Depending on certain factors, a larger wire cross-section may cause interference or even a reduction in current.

It is compulsory for an earth cable to be green and yellow.
The other supply or information cables can be of a different colour.

N.B. : Favour the use of a cable of the same colour for the repair.

5.3. Method for stripping a wire

After cutting the wire, strip it without cutting the strands using approved wire strippers and observing the following length :

- 2,8 ± 0,5 mm for crimping of a clip or MQS tab
- 5 ± 1 mm for crimping of a clip or MQS tab
- 8 ± 1 mm for crimping a sleeve
- 15 ± 1 mm for an insertion in a sleeve

5.4. Method for tin soldering

Thestrengthening of a faulty crimp (electrical resistance too high) by tin soldering is permitted, observing the following procedure.
Tools required :

- Soldering iron with clean bit
- Tin 0,7 mm (60% tin 40% lead) with soldering flux without halogen

Method of operation :

- Melt a little tin on the iron bit
- Apply the iron bit under the crimp, the crimp wings must be visible
- Apply the tin wire to the copper strands at the end of the crimp (Soldering consumption approximately 3 mm)

N.B. : The times indicated are only valid for wires with a cross-section of 0,35 to 0,6 mm². For larger cross-sections increase the time by 2 to 3 seconds.

CAUTION : It is important not to apply too much tin (risk of stiffening of the wire) to avoid damaging the wire insulation and the single-wire seals.

5.5. Method for unclipping a contact

ESSENTIAL : In extremely cold temperatures, the vehicle must be moved into a heated area and left to return to a temperature of approximately 20 °C before any work is carried out.

The contact must only be unclipped using the unclipping tool which is part of the approved kit and in accordance with instructions included.

CAUTION : Take care not to damage the seals, the contact cells, or the contacts to guarantee the sealing of the connector on refitting.

5.6. Method for selecting a contact

When replacing a contact or a spade terminal in a connector, it is imperative that the same components are used (gold-plated or tin-plated clip).

5.7. Method for positioning a contact in its cell

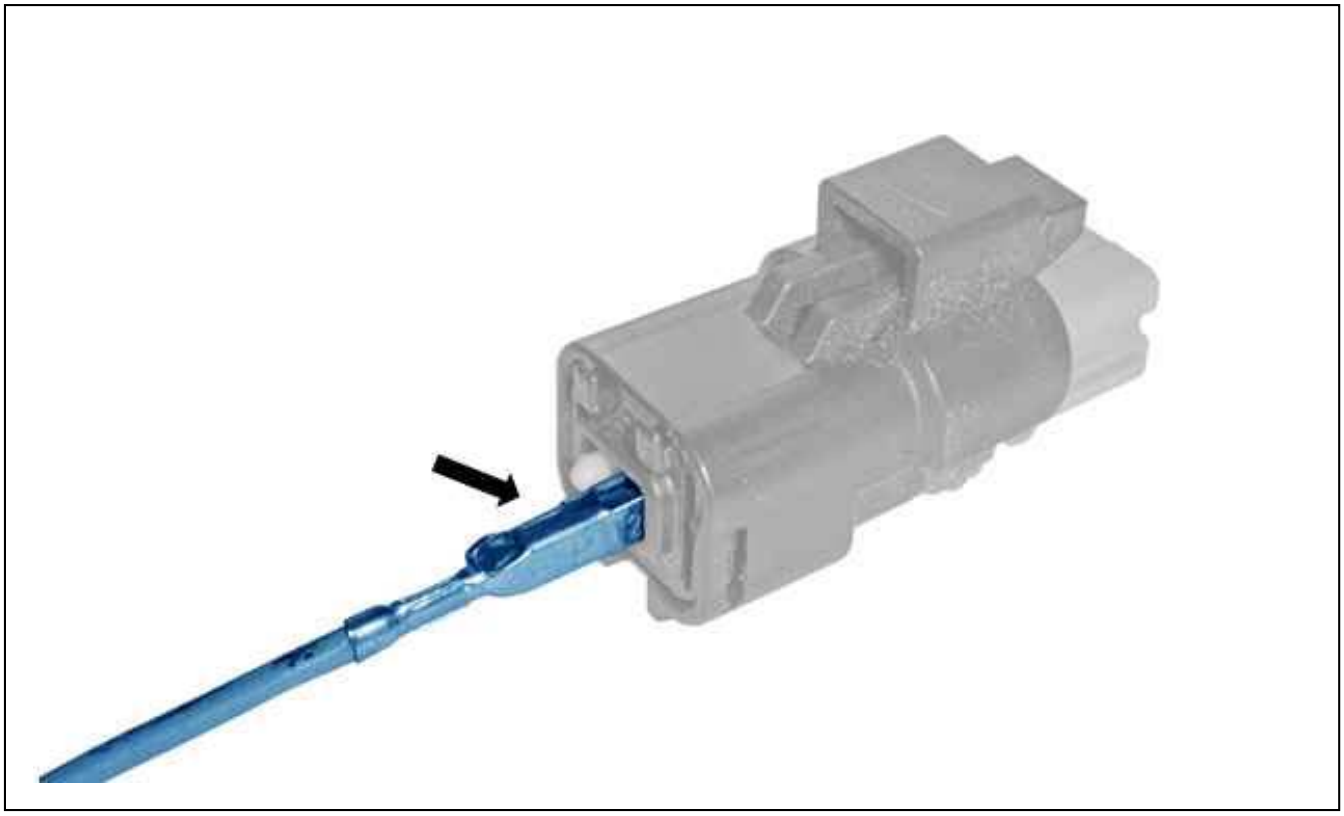

Figure : D6AM03RD

Positioning a contact :

- Visually analyse the condition of the contact
- Insert the contact in its cell
- Put the double lock back in place (according to equipment)

- Pull the wire gently

CAUTION : If the contactis not retained in the cell, the connector must be replaced.

5.8. Method for applying a heat-shrink sleeve

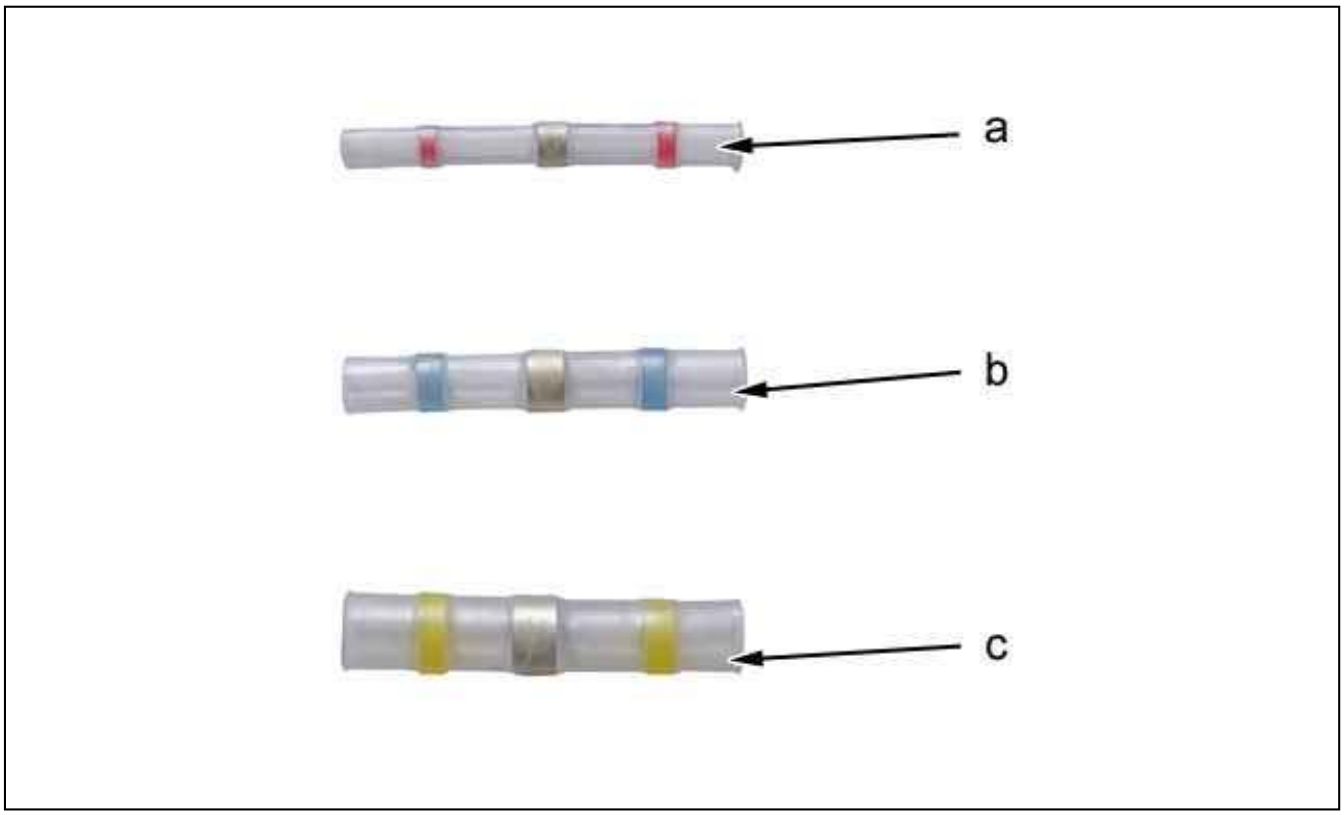

Figure : D6AM03SD

The heat-shrink sleeves must be chosen according to the cross-section of the wire to be repaired :

- "a" Red sleeve : Wire between 0,35 mm2 and 1 mm2
- "b" Blue sleeve : Wire between 1 mm2 and 3 mm2
- "c" Yellow sleeve : Wire between 3 mm2 and 5 mm2

N.B. : Crimp the heat-shrink sleeve using the tools and items in the connection repair kit. If the repair requires the use of several heat-shrink sleeves, stagger them to retain a minimal volume.

5.9. Simple repair (1 Heat-shrink sleeve)

CAUTION : To restore an electrical connection with a heat-shrink sleeve, use only the tools and items in the approved kit.

N.B. : Allow approximately 90 seconds for pre-heating of the hot air generator, one minute heating time depending on the cross-section of the wires and 3 minutes for cooling of the hot air generator.

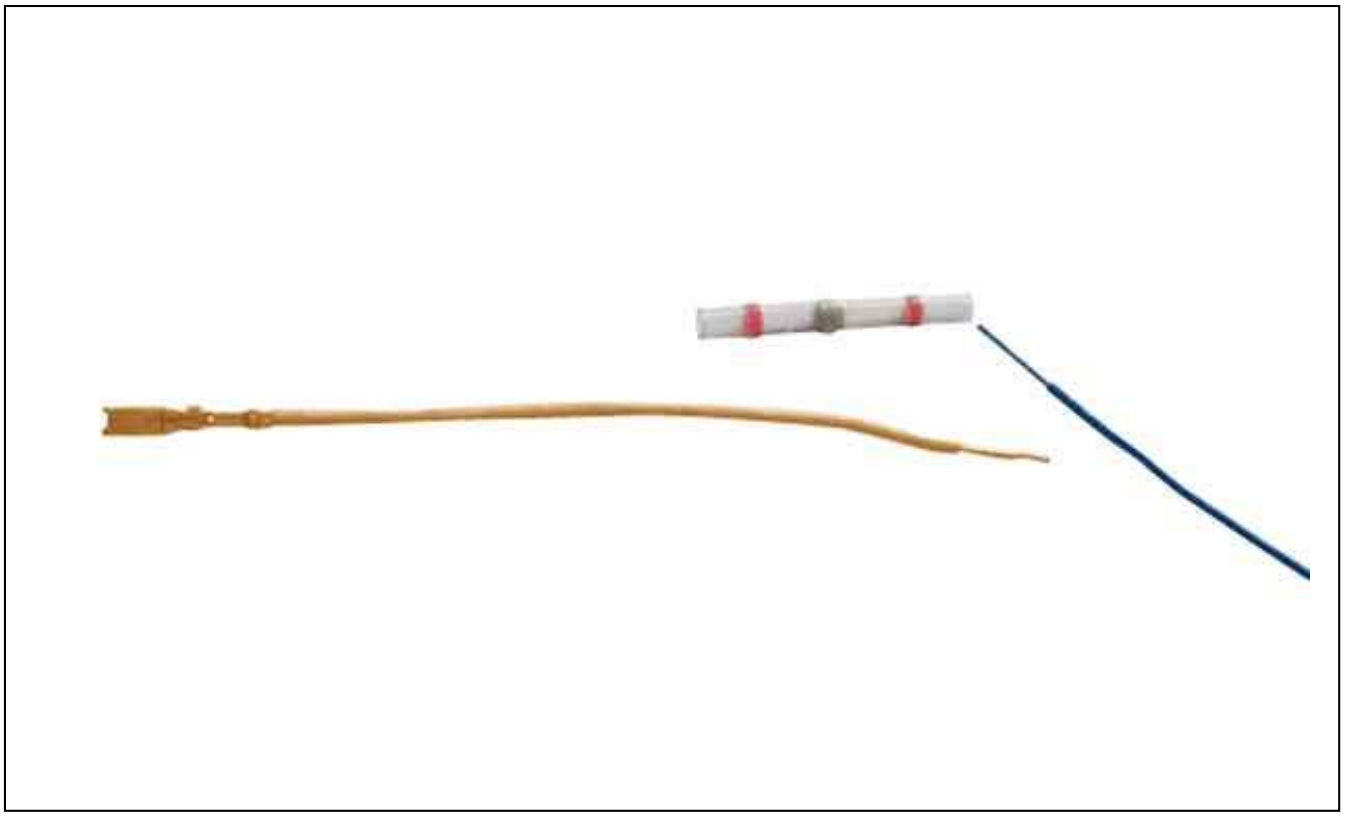

Figure : D6AM03TD

Method of operation (Applicable for a repair of 1 or more wires) :

- Remove any covering from the wire (tape, sleeve, etc.)
- Cut and strip the end of each wire to be repaired ; Using the wire strippers

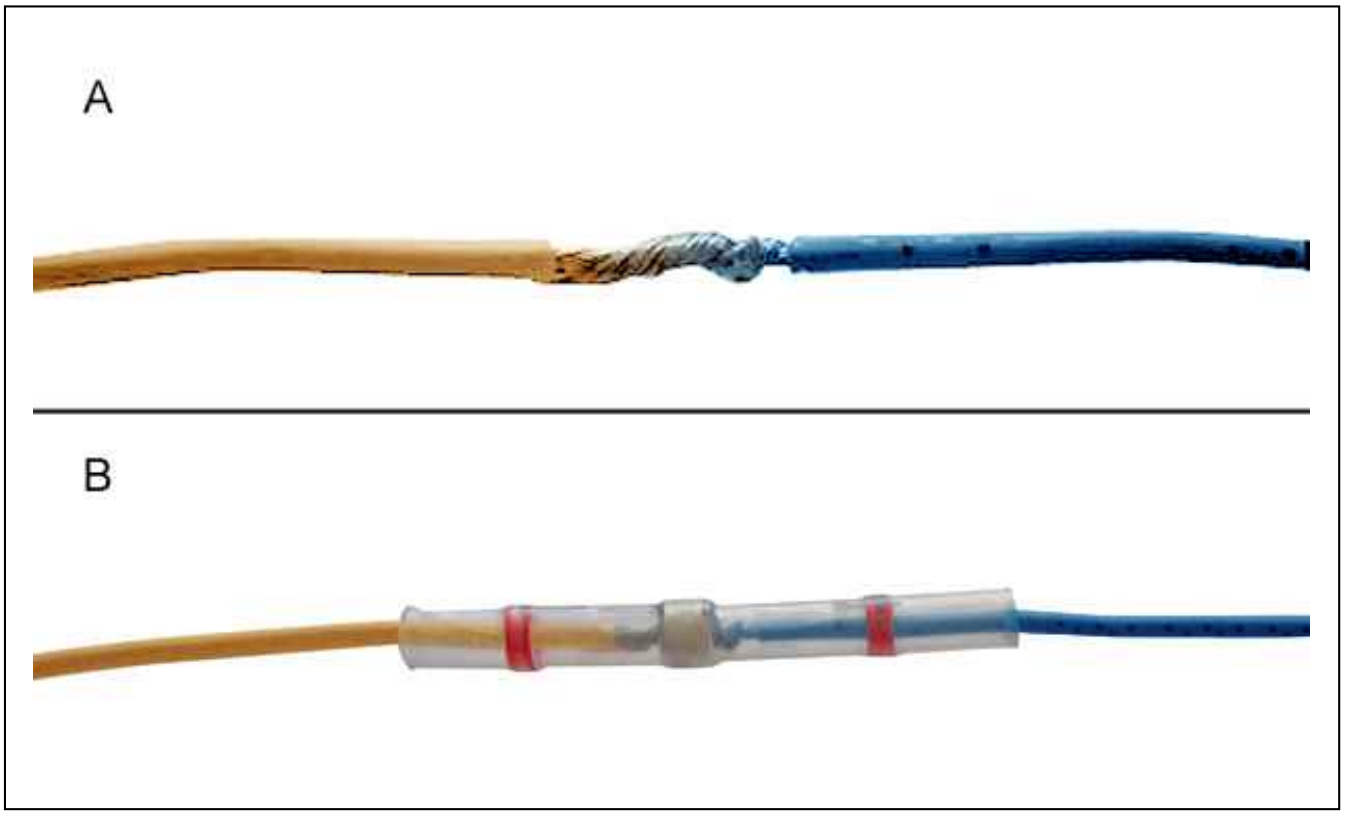

Figure : D6AM03UD

"A" Engage the stripped end of the 2 respective wires in the heat-shrink sleeve, twisting them.
"B" Support the 2 wires and assemble them by heating the sleeve ; Using the hot air generator (see table below).

Diameter of wires	Hot air generator settings	Repair time
2 mm2 wire cross section	Position 6 Ventilation 1	30 seconds
2 mm2 wire cross section	Position 4 Ventilation 2	20 seconds
0,5 mm2 wire cross section	Position 6 Ventilation 1	20 seconds
0,5 mm2 wire cross section	Position 4 Ventilation 2	20 seconds

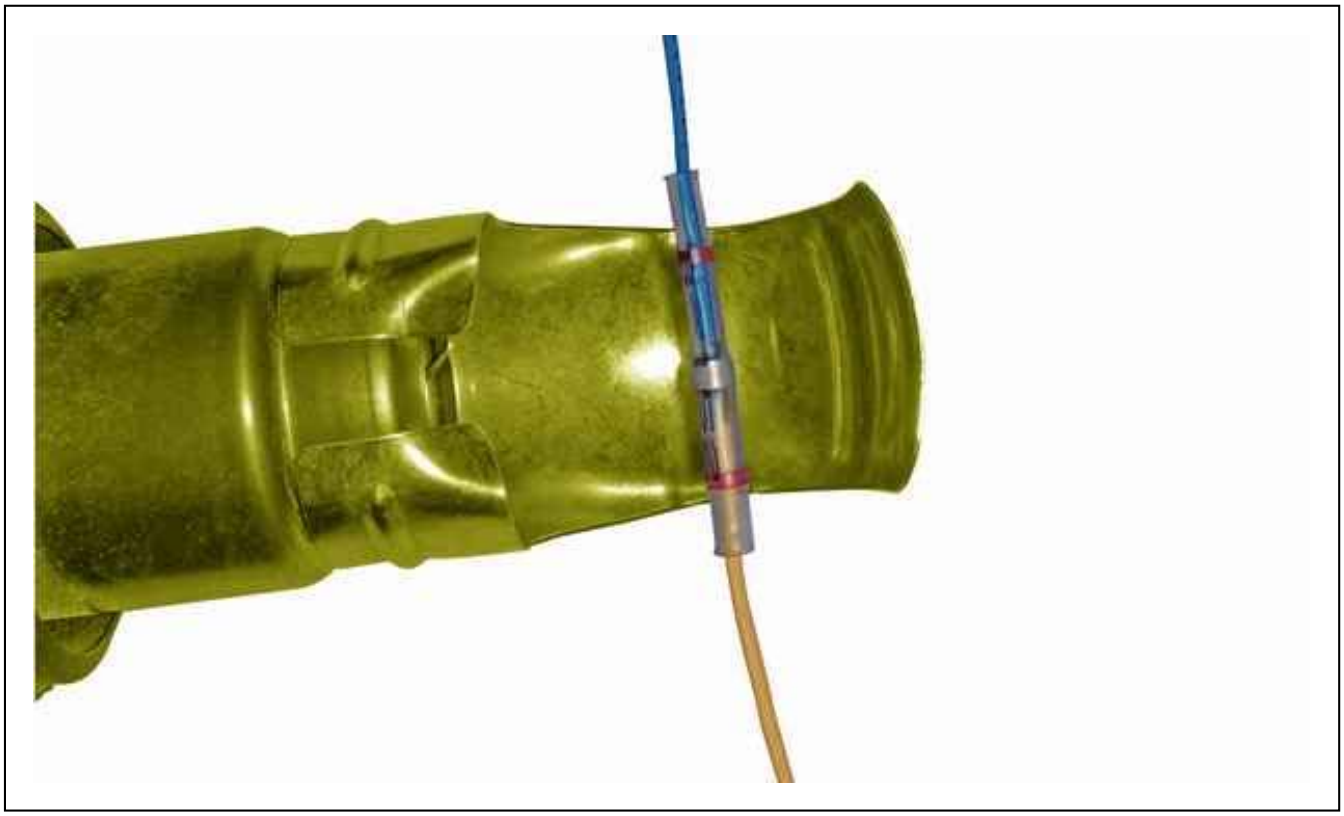

Figure : D6AM03VD

Sideways movement of the hot air generator may be necessary to obtain uniform heating of the heat-shrink sleeve.
Put the contact in place in the connector.
Visually analyse the condition of the contact.
Insert the contact in its cell.
Gently pull on the wire to check that the contact is locked.
Restore the covering of the wire to guarantee protection at least identical to the existing protection.

N.B. : If the routing of the harness is modified, the harness must be clipped.

CAUTION : The tracks of a connector which are not connected electrically to the vehicle's harness must be fitted with a connection wire and have an end cap fitted using the hot air generator.

CAUTION : If the repair requires the use of several heat-shrink sleeves, take care to stagger them to retain a minimal volume.

5.10. Repair using additional wires (2 heat-shrink sleeves), wire unusable

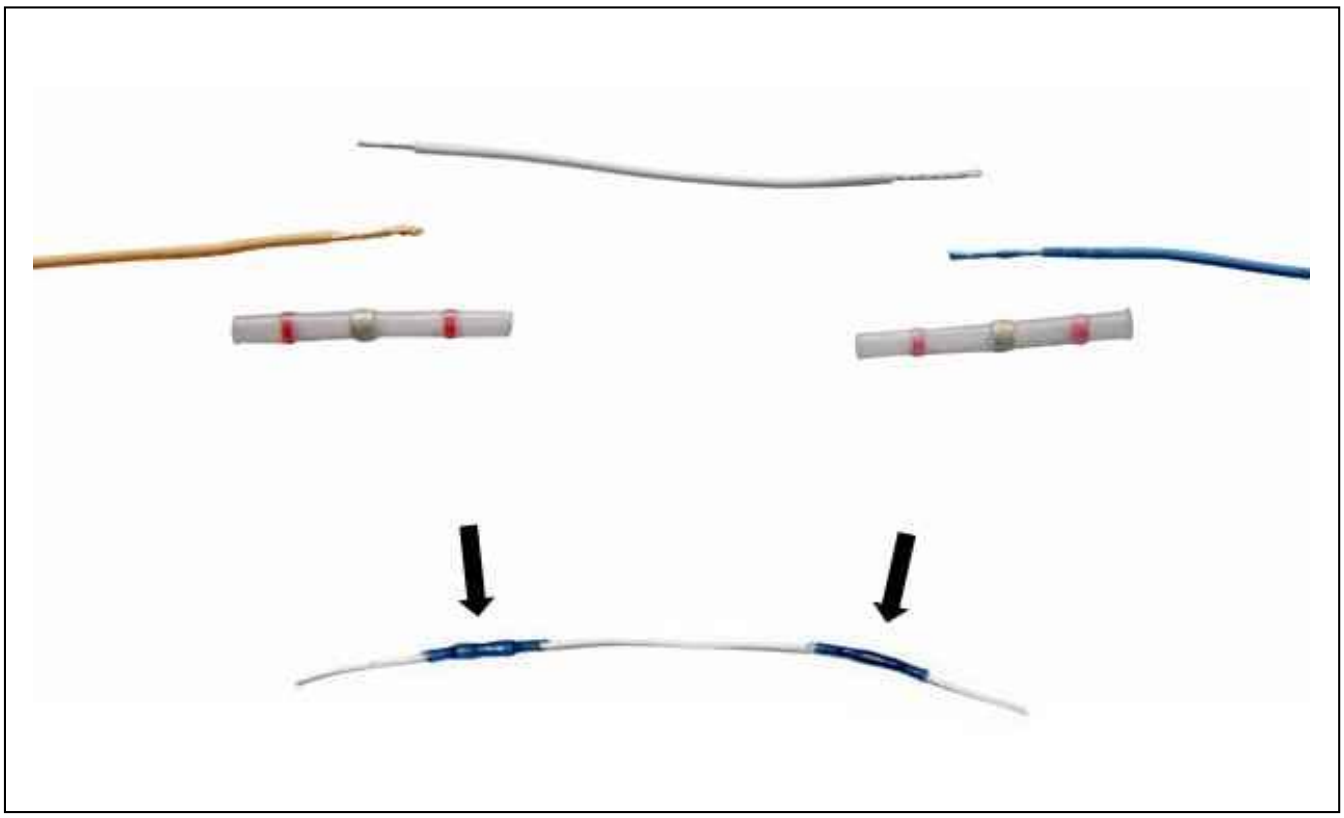

Figure : D6AM03WD

The heat-shrink sleeves must be chosen according to the cross-section of the wire to be repaired :

- Red sleeve : Wire between 0,35 mm2 and 1 mm2
- Blue sleeve : Wire between 1 mm2 and 3 mm2
- Yellow sleeve : Wire between 3 mm2 and 5 mm2

N.B. : Crimp a heat-shrink sleeve using the tools and items in the connection repair kit If the repair requires the use o several heat-shrink sleeves, stagger them to retain a minimal volume.

Position the wires coming from one side in one sleeve and those coming from the other side in another sleeve taking care that the wires do not move away from each other.
To make it easier to insert the wires in the heat-shrink sleeve, turn the heat-shrink sleeve slightly.
Heat the sleeve using the hot air generator until the tin core melts and the surplus adhesive appears.

5.11. Method for applying a stitch weld sleeve

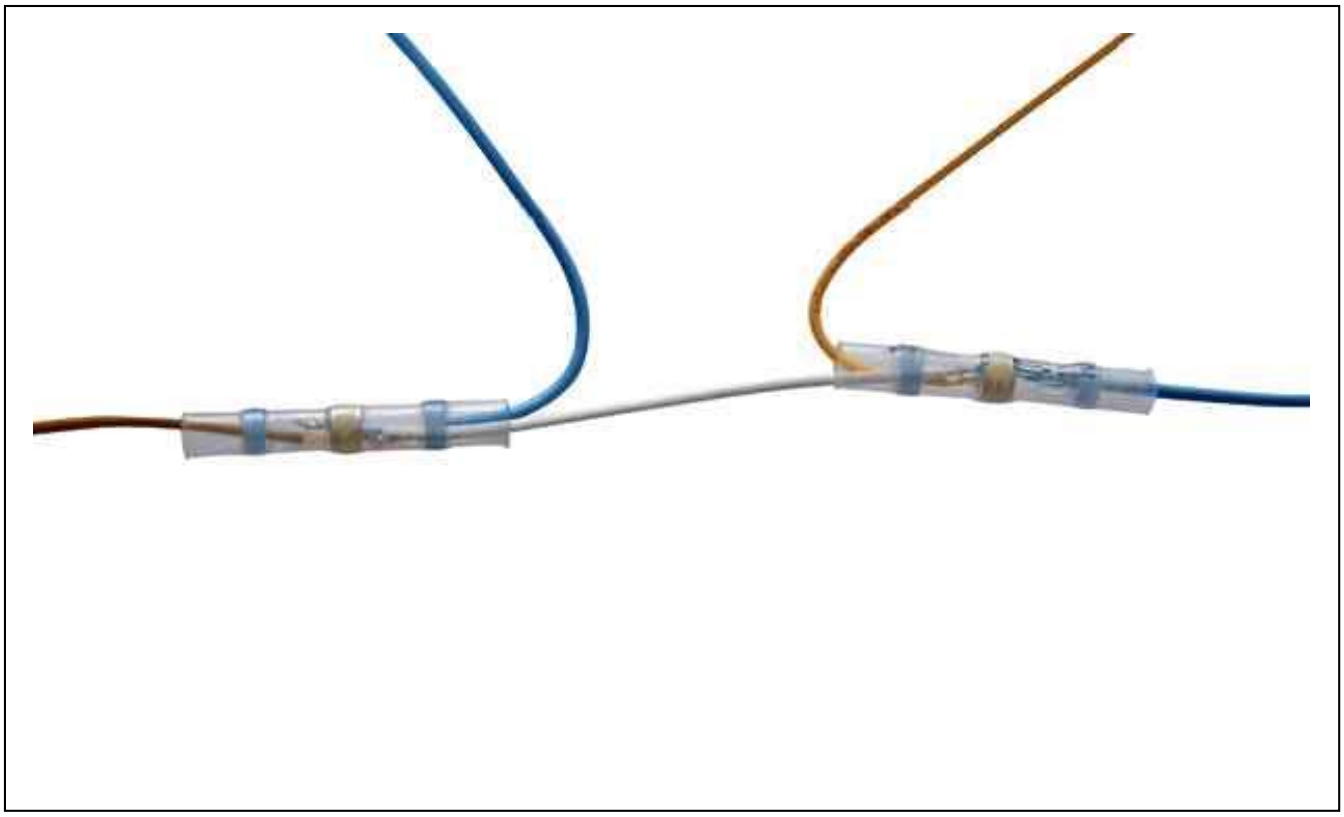

Figure : D6AM03XD

The heat-shrink sleeves must be chosen according to the cross-section of the wire to be repaired :

- Red sleeve : Wire between 0,35 mm2 and 1 mm2
- Blue sleeve : Wire between 1 mm2 and 3 mm2
- Yellow sleeve : Wire between 3 mm2 and 5 mm2

N.B. : Crimp the heat-shrink sleeve using the tools and items in the connection repair kit If the repair requires the use of several heat-shrink sleeves, stagger them to retain a minimal volume.

Position the wires coming from one side in one sleeve and those coming from the other side in another sleeve taking care that the wires do not move away from each other.

N.B. : Turn the heat-shrink sleeve slightly to insert the wires in the sleeve.

Heat the sleeve using the hot air generator until the tin core melts and the surplus adhesive appears.
Approximately 90 seconds must be allowed for pre-heating of the gun, 1 minute for heating according to the cross-section of the wires and 3 minutes for cooling of the gun.

5.12. Method for restoring the covering

In order to restorethe harness covering, guarantee protection at least identical to the existing protection.
If modifications are made to the routing, guarantee a minimum distance of 10 mm between the harness and its environment.
For the taped harnesses, place the repaired part flush against the body of the harness and tape the whole using adhesive tape.
In the case of plastic sleeves, place the repaired part flush against the body of the harness then replace the sleeving.

5.13. Method for selecting a protector

Mechanical protection : The mechanical protection is provided using a split spiral sleeve (E.g. : Engine compartment, Wheel arch).
Thermal protection : The thermal protection is provided using a high temperature split spiral sleeve (E.g. : Near to the

exhaust in the engine compartment).
Noise protection : The noise protection is provided using a sound deadening sleeve during reworking requiring simple o mechanical protection (E.g. : Passenger compartment, Tailgate).

5.14. Restoring the covering

In the case of changes to the routing, a distance of 10 mm minimum must be guaranteed between the harness and its surroundings. A positioning device is compulsory to guarantee the positioning and orientation.
Taped strands : Place the repaired part flush against the body of the harness and tape the whole using adhesive tape.
Sleeved strands : Place the repaired part flush against the body of the harness then put the sleeving back in place.
Closed sleeves : Avoid cutting the closed sleeves in order to permit passage of the wire, otherwise place the repaired wire on top with appropriate covering.
Open sleeves : It is compulsory to tape the openings after work.

5.15. Method for repairing the earth points

N.B. : In all cases, check the condition of the earth terminal contact/support/nut or bolt surface and clean it.

Several solutions are recommended.
Soldered square nut with broken self-tapping bolt or the thread of which is damaged :

- If the bolt can be extracted, remove it, drill and tap to M8 using a new M8 bolt then apply a tightening torque of 17 Nm ± 3 Nm
- If there is another earth nut nearby, extend the earth wire to reach this earth point, taking care to create a drip channel loop, Apply a tightening torque of 12 Nm ± 2 Nm

Stud which is badly soldered (TUCKER stud), broken or the thread of which is damaged :

- If the stud soldering has failed, re-solder the old stud by brazing
- If the thread is damaged or the bolt is broken, solder a new stud by brazing

In the 2 cases of soldering, apply the method below :

- Place a fire extinguisher near the work area
- Strip the location at which the pin is to be soldered
- Rotary sand the soldering location
- Solder the stud or the pin using the gun provided for this purpose
- Apply anticorrosion protection
- Put the removed components back in place

Soldered square nut with slackened self-tapping bolt :

- If the M6X100 self-tapping bolt is simply slack, retighten the bolt applying a tightening torque of 12 Nm ± 2 Nm
- If the bolt has to be removed, fit a new M6X100 self-tapping bolt, engage it manually in the existing thread (take care not to create a new thread) then apply a tightening torque of 12 Nm ± 2 Nm

Earth on the gearbox slackened : If the bolt M8x125 is simply slack, retighten by applying a tightening torque of 17 Nm ± 3 Nm.

6. Specificities : Hybrid vehicles

The harnesses of the 200 V network in hybrid vehicles can be repaired, with the exception of the shielded cable ; Replacement of the shielded cable is imperative if there is any damage to the cable or its connections.

ESSENTIAL : For the harnesses of the 200 V network, on hybrid vehicles (low voltage range of 50 V to 1000 V), the personnel must have the authorisation according to the type of operation of the publication UTE C 18-550.

If the reworking is carried out by a third party, a contract must be drawn up for the work between the supplier and the company that it employs, before the work is carried out.

ESSENTIAL : All work relating to the connectors and contacts must be carried out by qualified and trained personnel.

The wirer will take all measures necessary to avoid a change of personnel during the period of quality reworking in the reworking sector.

7. Failure detected / Circumstances of use

7.1. Wire broken

Apply the following methods in order :

- Method for checking a wire (5.1)
- Method for stripping a wire (5.3)
- Method for selecting a wire (5.2) (In the case of an unusable wire)
- Method for restoring the covering (5.12)
- Method for selecting a protector (5.13)

ESSENTIAL : If the wire is unusable, cut the wire at the accessible points (near the connectors) and apply section 4.1 observing 2 rules : Remain in the same harness, retain the numbering of the wires (Cut the wire in such a way as to retain the numbered ends).

ESSENTIAL : In the case of a vehicle under warranty, if more than 4 wires are cut, the harness must be replaced.

7.2. Burnt wire

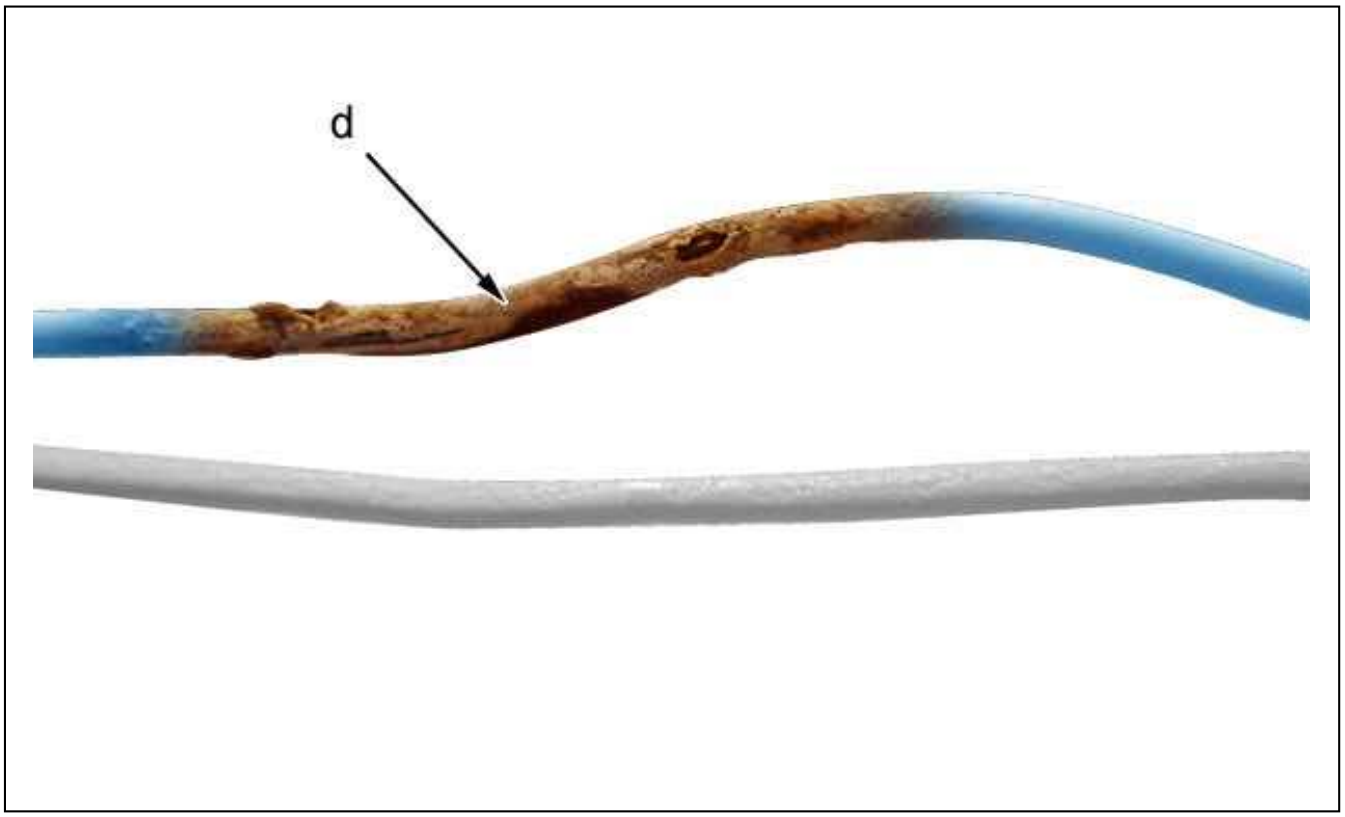

Figure : D6AM03YD

"d" Burnt wire.

Apply the following methods in order :

- Method for stripping a wire (5.3)

- Method for selecting a wire (5.2)
- Method for restoring the covering (5.12)
- Method for selecting a protector (5.13)

N.B. : Re-cut more than 5 cm from the hot point and strip the wires; check that there is no sign of burning in the stripped part of the wire.

CAUTION : After analysing the fault, eliminate its cause ; Check all of the vehicle functions, the blown fuses.

CAUTION : In the case of a vehicle under warranty, the harness must be replaced.

CAUTION : In the case of a vehicle which is not under warranty, if more than 4 wires are burnt, the harness must be replaced.

7.3. Missing wires in the harness

Apply the following methods in order :

- Method for selecting a wire (5.2)
- Method for selecting a contact (5.6)
- Method for selecting a protector (5.13)

7.4. Faulty splice

Apply the following methods in order :

- Method for stripping a wire (5.3)
- Method for selecting a wire (5.2)
- Method for applying a stitch weld sleeve (5.9)
- Method for selecting a protector (5.13)

ESSENTIAL : Cut the wire level with the splice.

7.5. Wire cut at the connector outlet / Contact unclipped or pulled out / Contact oxidised

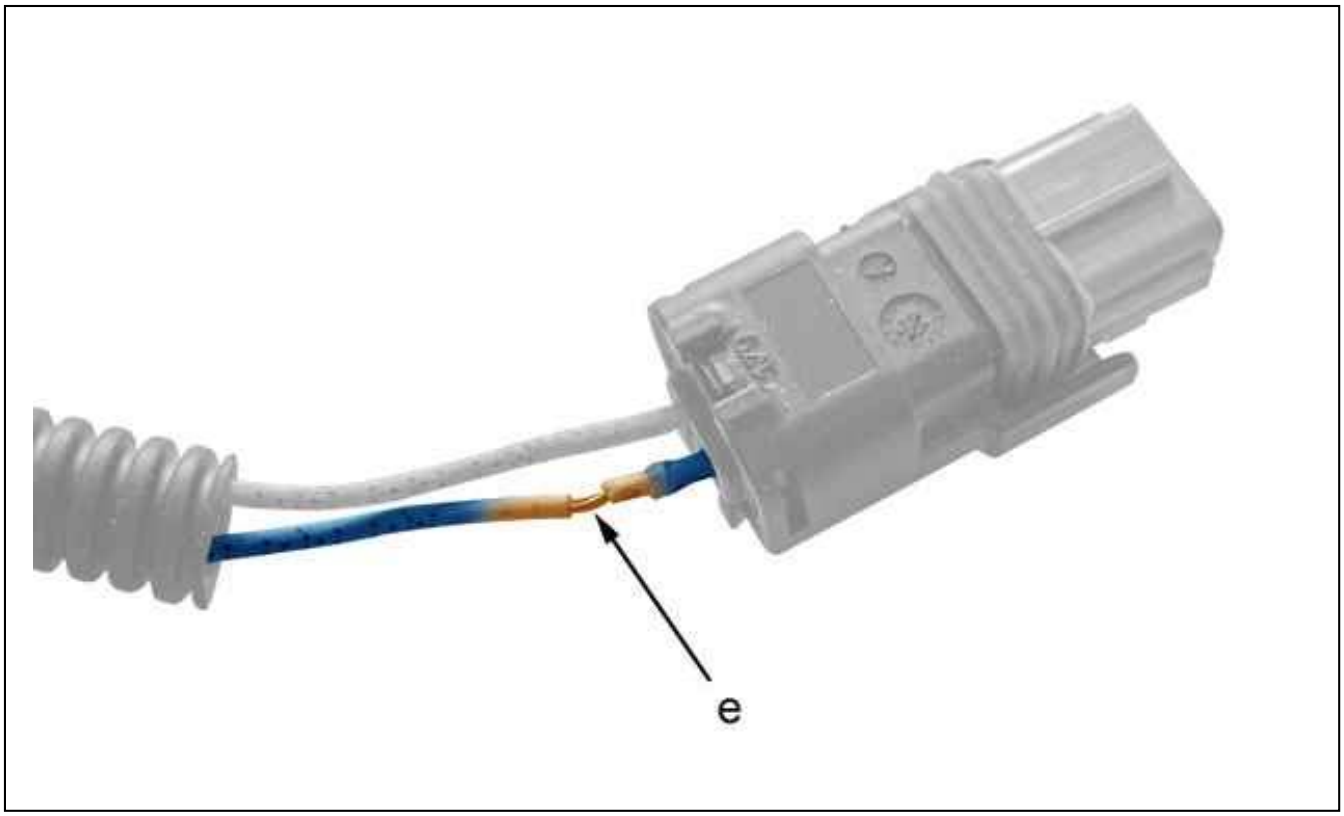

Figure : D6AM03ZD

"e" Wire cut at the connector outlet.
7.5.1 - Pre-wired connector available from the Replacement Parts Department (Contact + wire assembly).
Apply the following methods in order :

- Method for unclipping a contact (5.5)
- Method for stripping a wire (5.3)
- Method for selecting a wire (5.2)
- Method for selecting a contact (5.6)
- Method for positioning a contact in its cell (5.7)
- Method for selecting a protector (5.13)

ESSENTIAL : If the contact is oxidised, replace the contact, create a low harness point at the connector outlet (modify the drip channel routing) and depending on the degree of oxidation, add grease in the connector (contact cleaner).

7.5.2 - Pre-wired connector available from the Replacement Parts Department.
Apply the following methods in order :

- Method for stripping a wire (5.3)
- Method for restoring the covering (5.12)
- Method for selecting a protector (5.13)

ESSENTIAL : If the contact is oxidised, replace the contact, create a low harness point at the connector outlet (modify the drip channel routing) and depending on the degree of oxidation, add grease in the connector (contact cleaner).

No component of the connector available from the Replacement Parts Department.
Replace the harness .

7.6. Wire cut at the overmoulded connector outlet

Apply the following methods in order :

- Method for checking a wire (5.1)

- Method for stripping a wire (5.3)
- Method for selecting a wire (5.2) (In the case of an unusable wire)
- Method for restoring the covering (5.12)
- Method for selecting a protector (5.13)

ESSENTIAL : If the wire is unusable and a passage hole is available, fit a grommet ; If an additional wire is available, use it and carry out the operations on each side of the overmoulded connector.

ESSENTIAL : If more than 4 wires are cut, the harness must be replaced.

7.7. Trapped wire

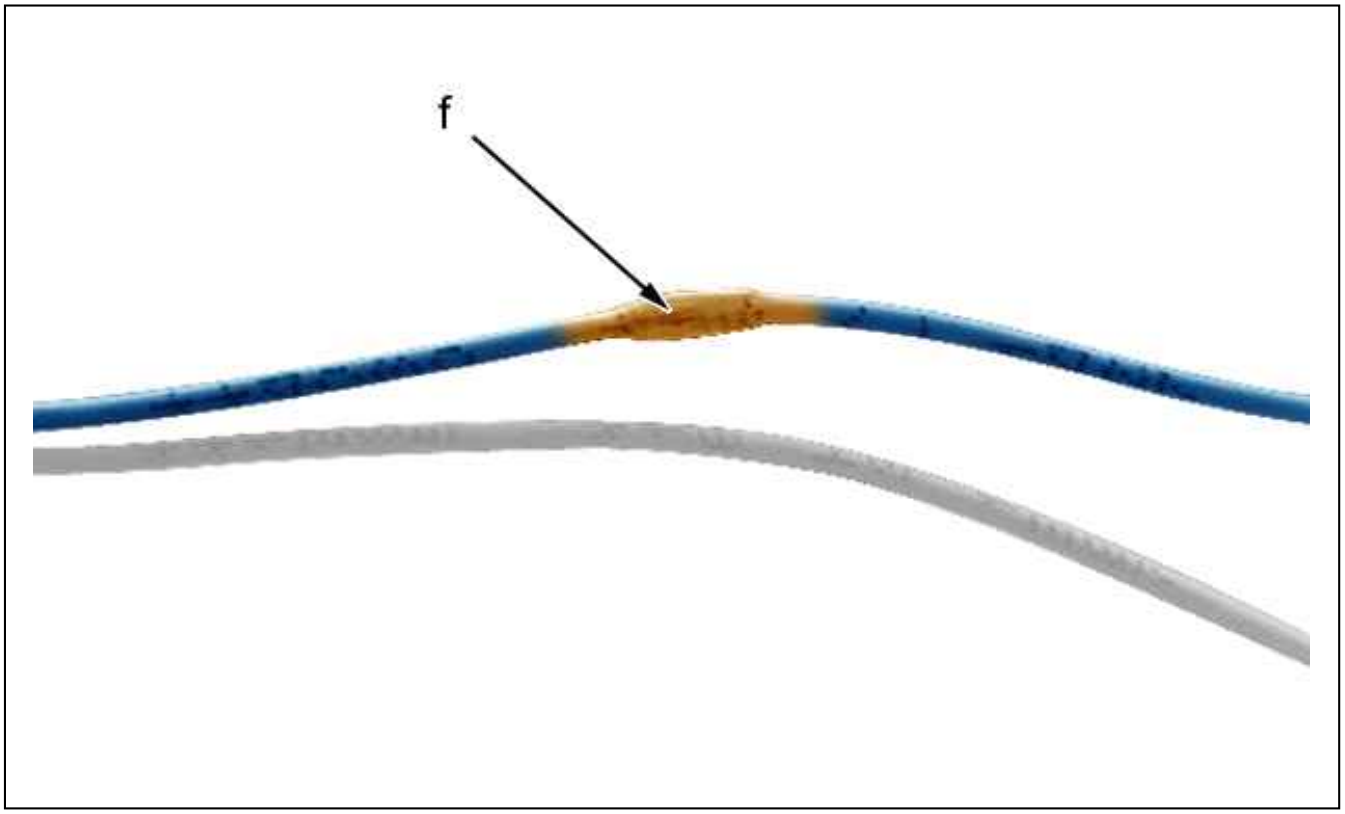

Figure : D6AM040D

"f" Trapped wire.
Apply the following methods in order :

- Method for checking a wire (5.1)
- Method for stripping a wire (5.3)
- Method for selecting a wire (5.2) (In the case of an unusable wire)
- Method for restoring the covering (5.12)
- Method for selecting a protector (5.13)

ESSENTIAL : If the wire is unusable, cut the wire at the accessible points (near the connectors) and apply section 4.1 observing 2 rules : Remain in the same harness, retain the numbering of the wires (Cut the wire in such a way as to retain the numbered ends).

ESSENTIAL : If more than 4 wires are trapped, the harness must be replaced.

7.8. Stripped wire

Apply the method for selecting a protector (5.13).

7.9. Faulty crimping of a contact (Electrical resistance too high)

Apply the method for tin soldering (5.4).

7.10. Faulty earth point

Apply the method for repairing the earth points (5.14).

REMOVING - REFITTING : TACHOGRAPH

ESSENTIAL : Observe the safety and cleanliness recommendations.

1. Recommended tools

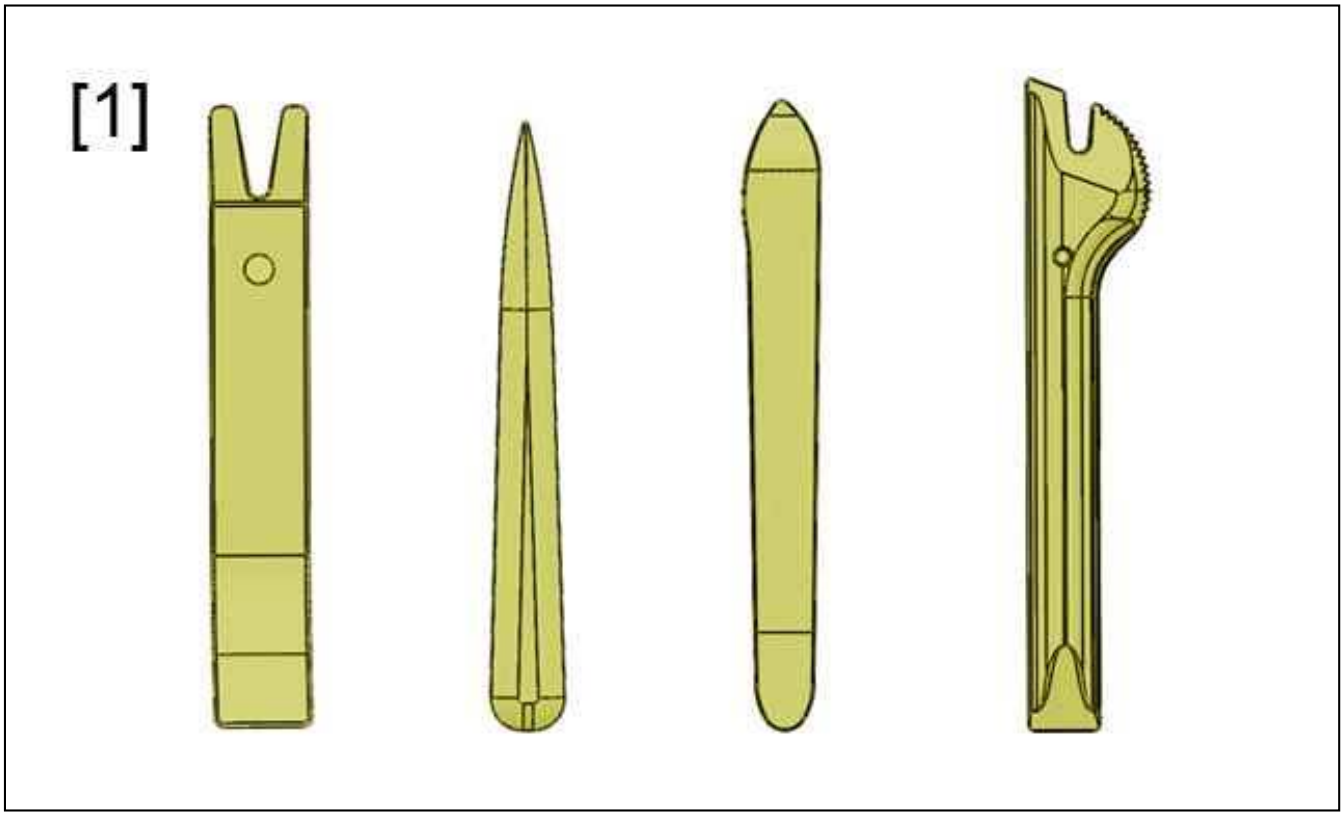

Figure : E5AP30WD

[1] Stripping tools (-).1350.ZZ.

2. Removing

Perform the following operations :

- Switch off the ignition
- Wait 3 minutes before disconnecting the battery
- Disconnect the battery

ESSENTIAL : It is prohibited to open the tachograph unit.

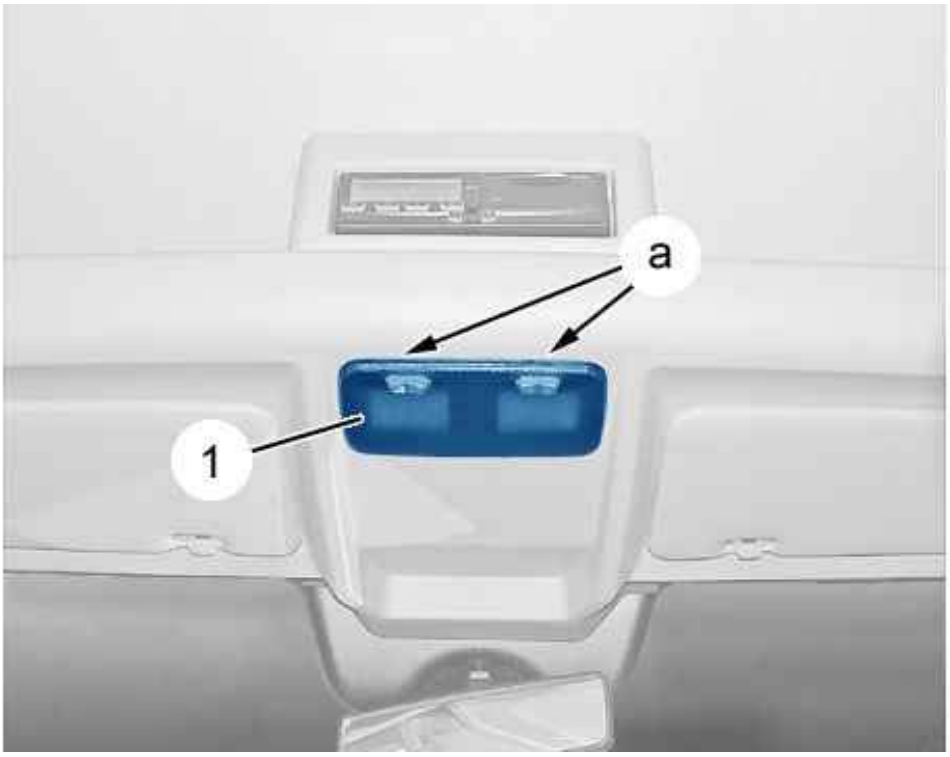

Figure : C5DM029D

Unclip and detach : The courtesy lamp (1) (at "a") ; Using tool [1].

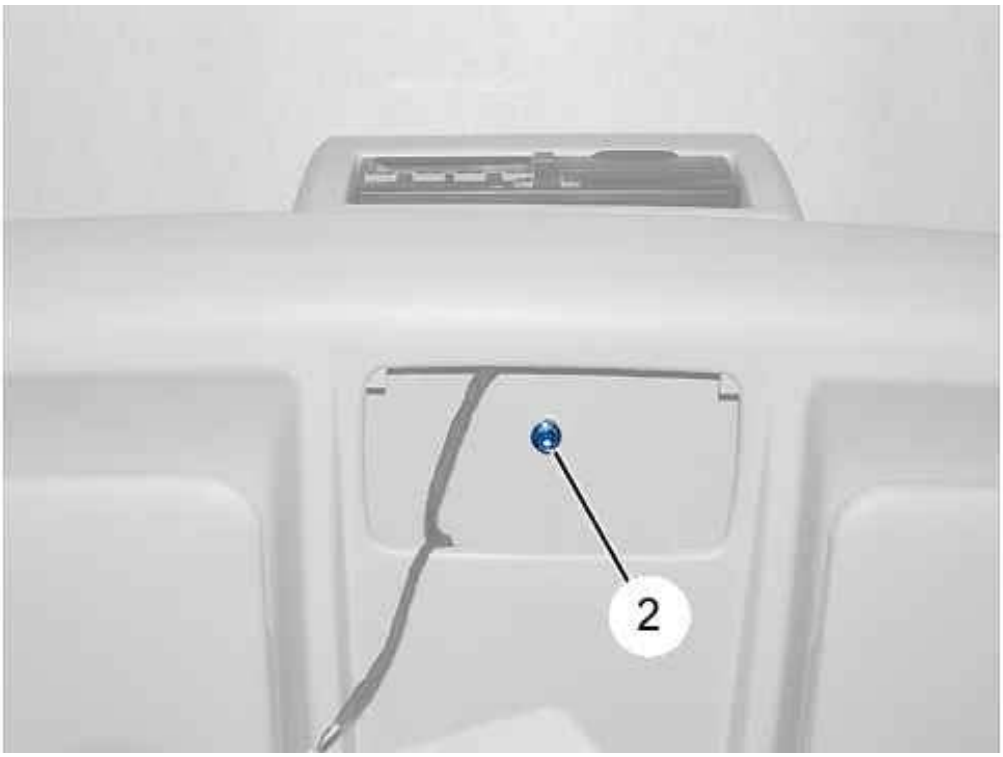

Figure : C5DM02AD

Remove bolts (2).

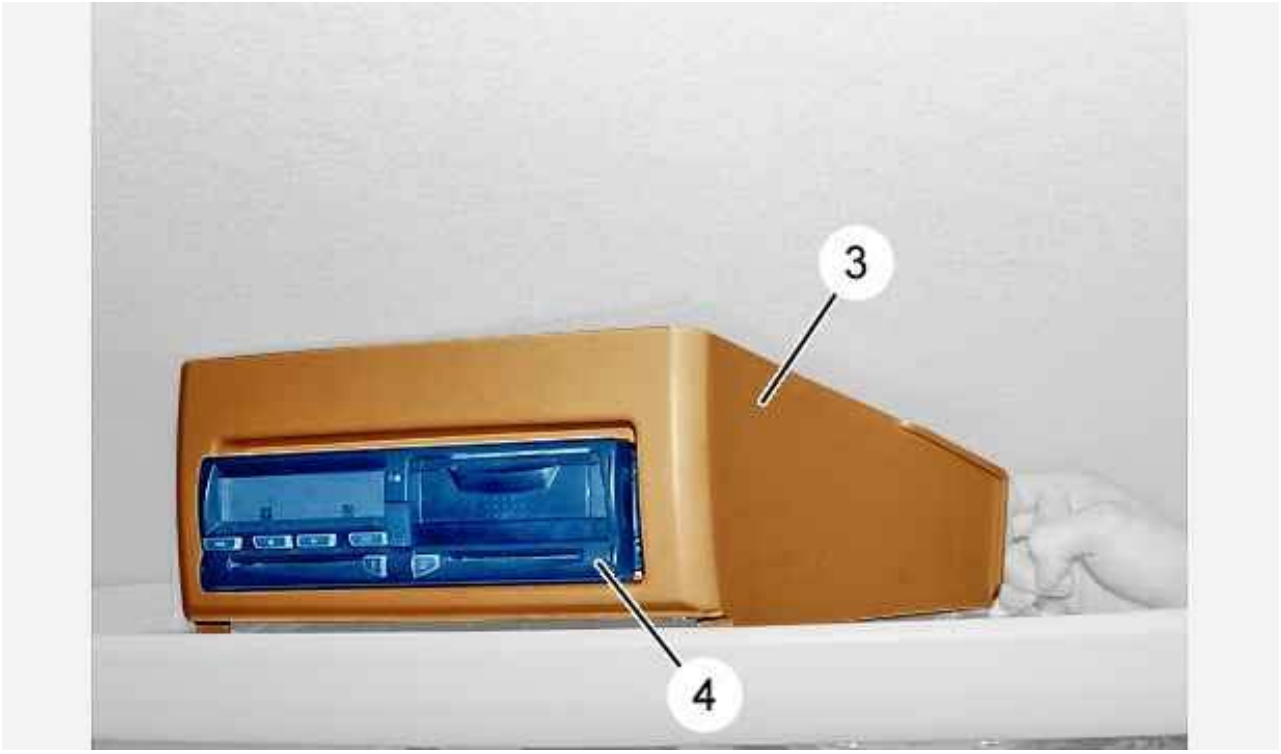

Figure : C5DM02BD

Release : The tachograph trim (3)(pull towards you).
Detach : Tachograph (4).

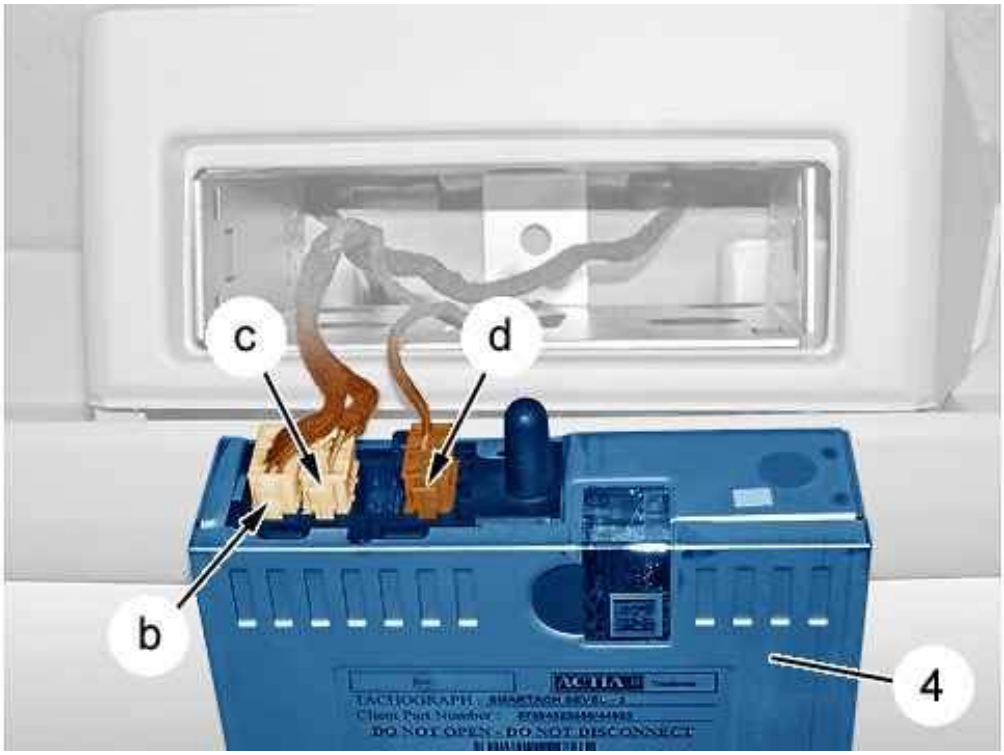

Figure : C5DM02CD

Disconnect the connectors (at "b", "c", "d").

Remove : Tachograph (4).

3. Refitting

Proceed in the reverse order to removal.
Reconnect the battery.
Check that the electrical equipment is working correctly.

REMOVING - REFITTING : INSTRUMENT PANEL

1. Removing

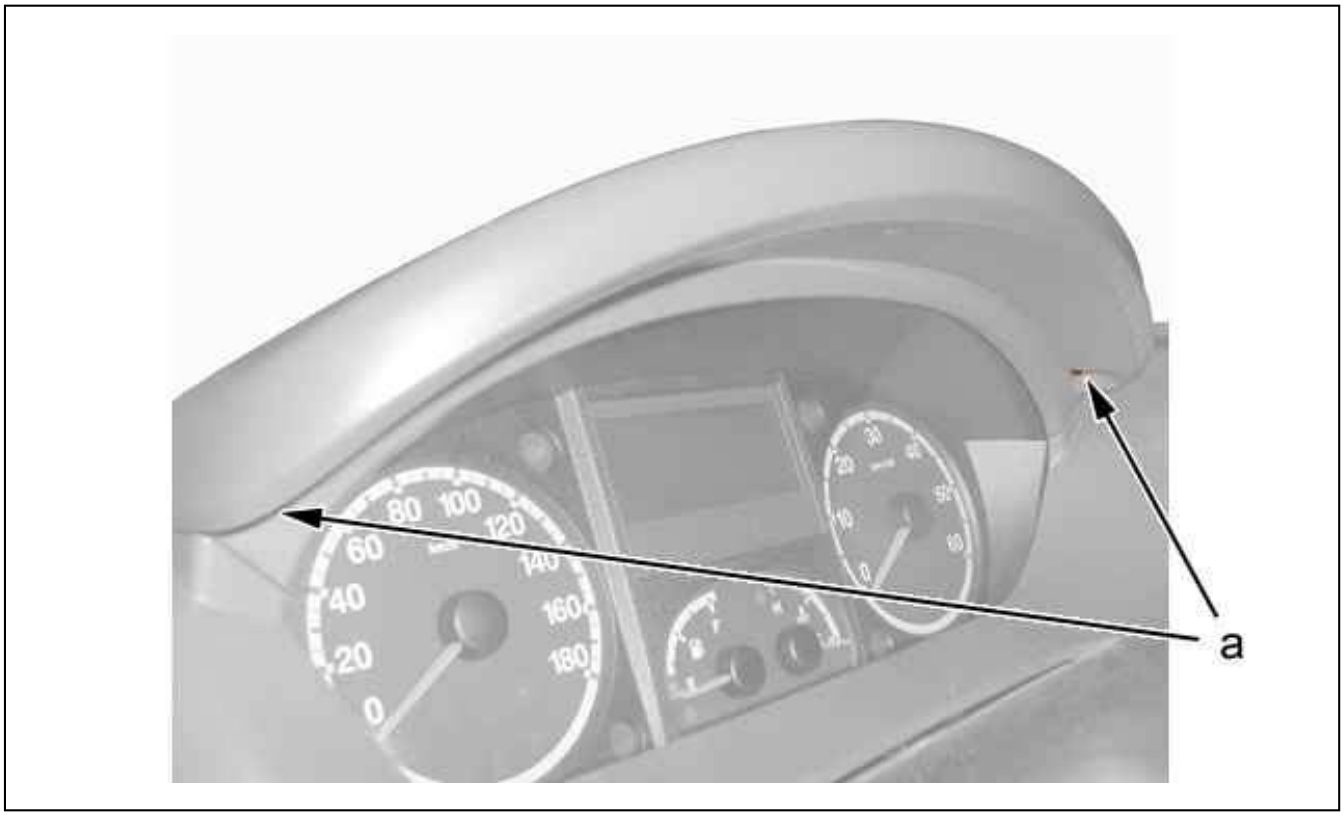

Figure : C5FP0XYD

Remove the bolts (at "a").

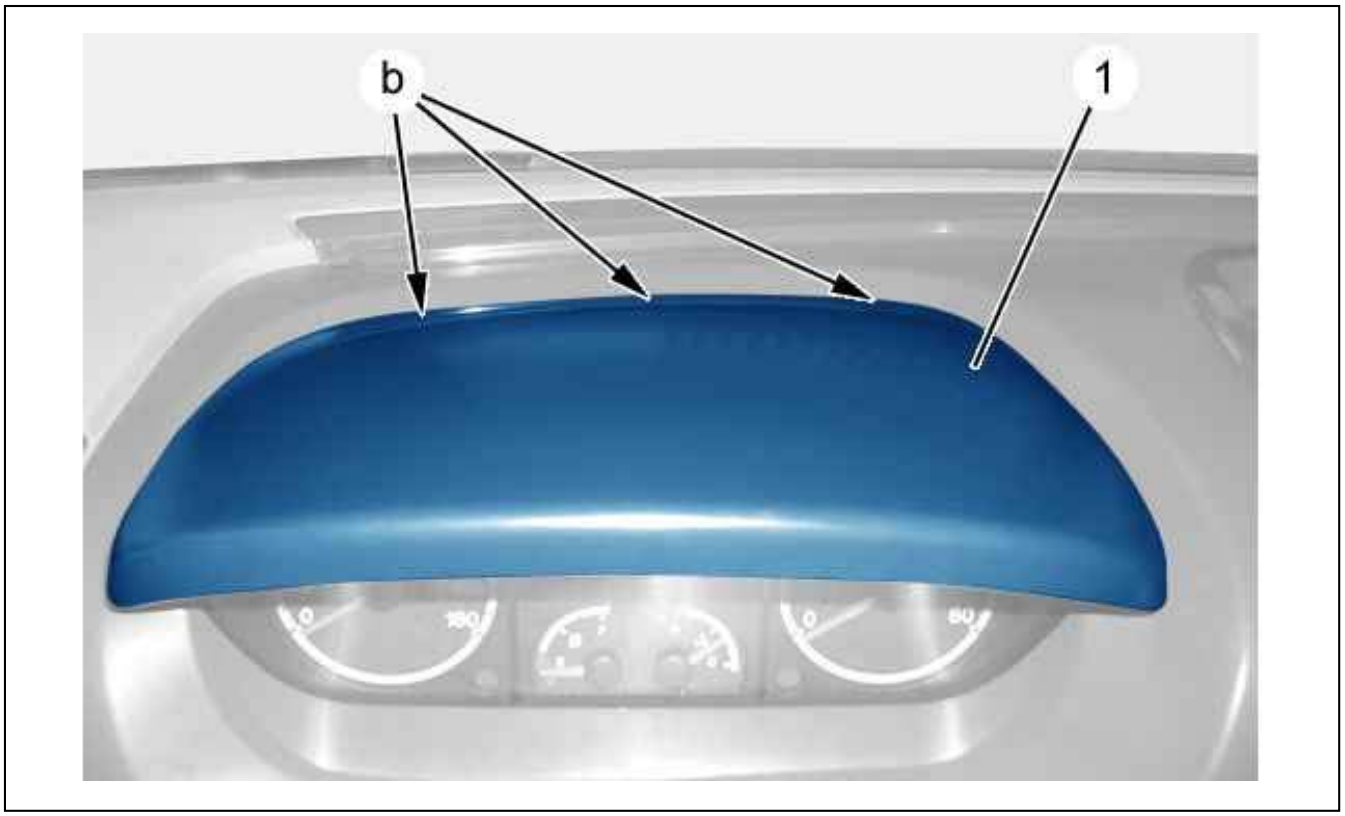

Figure : C5FP0XZD

Remove the instrument panel hood (1) Unclip at "b".

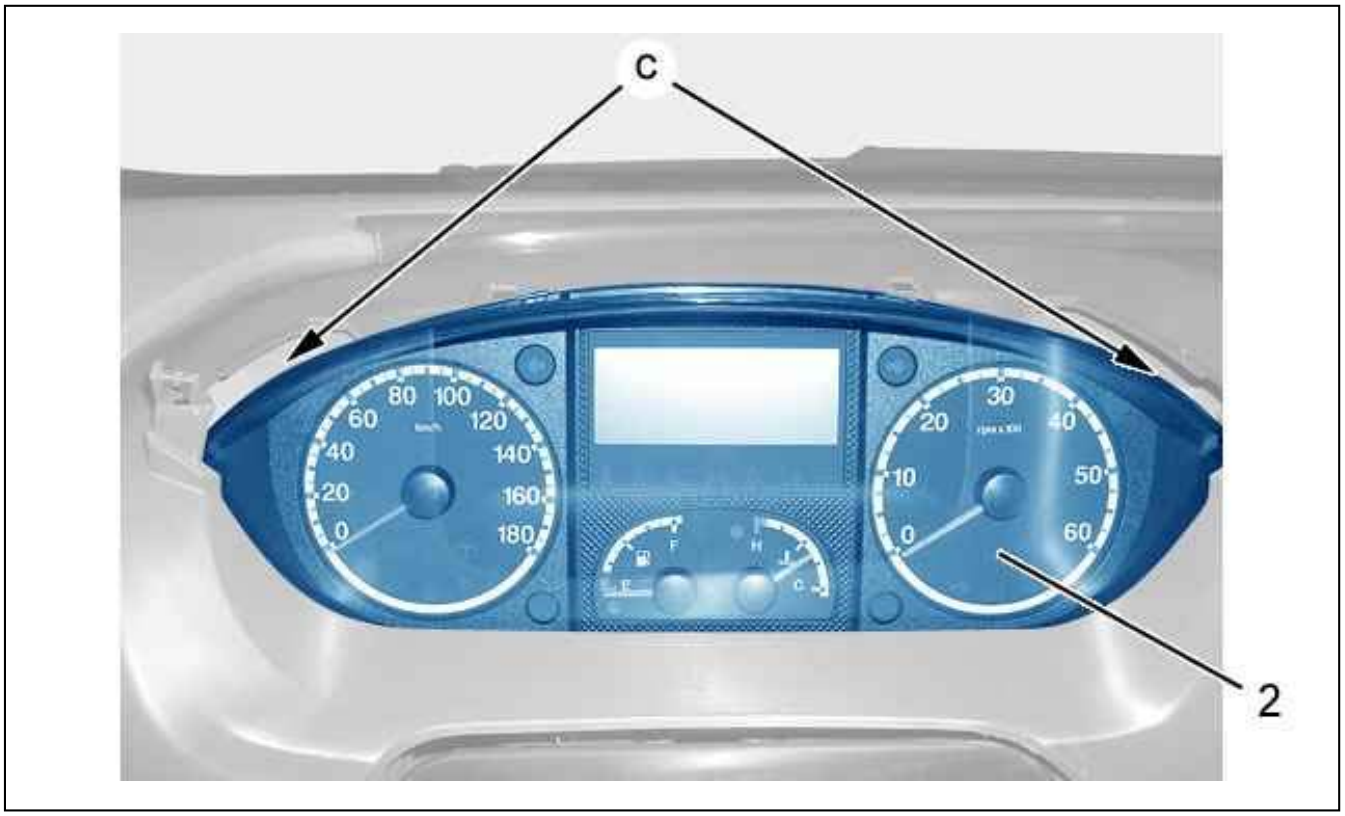

Figure : C5FP0Y0D

Remove the bolts (at "c").
Disengage the instrument panel (2) (partly).

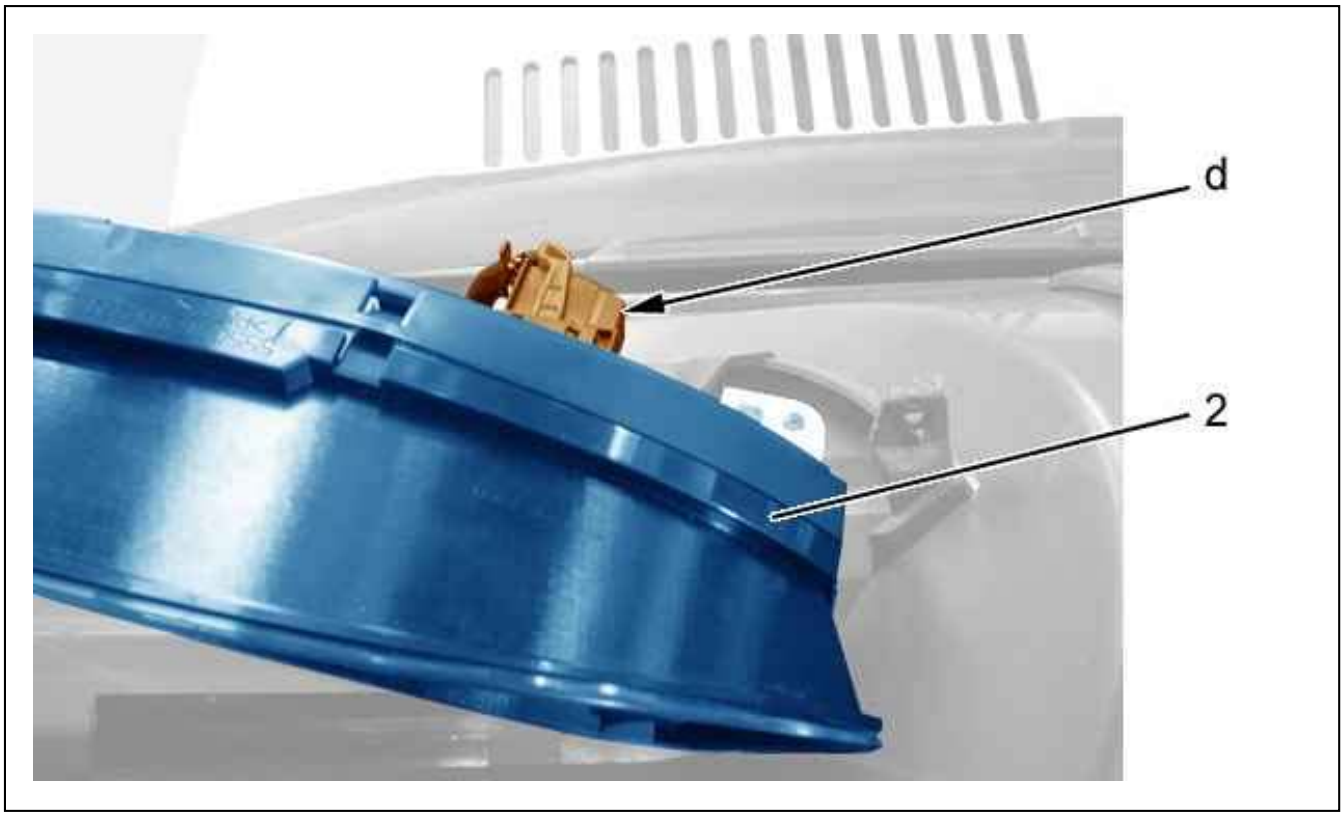

Figure : C5FP0Y1D

Disconnect the connector (at "d").
Remove the instrument panel (2) .

2. Refitting

Proceed in the reverse order to removal.
Check all the equipment works.

REMOVING - REFITTING : DASHBOARD

1. Removing

Disconnect the battery.
Remove :

- The audio system upper storage compartment (see the relevant operation)
- The audio system (see the relevant operation)
- The fascia lower central trim (see the relevant operation)
- The gear lever gaiter (see the relevant operation)
- The air conditioning control panel (see the relevant operation)
- The upper right-hand glove box (see the relevant operation)
- The driver’s air bag (see the relevant operation)
- The passenger air bag (see the relevant operation)
- The lower right-hand glove box (see the relevant operation)
- The fascia lower left-hand trim (see the relevant operation)
- The headlamp adjustment control (see the relevant operation)
- The instrument panel (see the relevant operation)
- Steering wheel (see the relevant operation)
- The steering column lower and upper trims (see the relevant operation)
- The steering wheel controls (see the relevant operation)
- The fascia upper ventilation grille (see the relevant operation)
- The bonnet opening control (see the relevant operation)

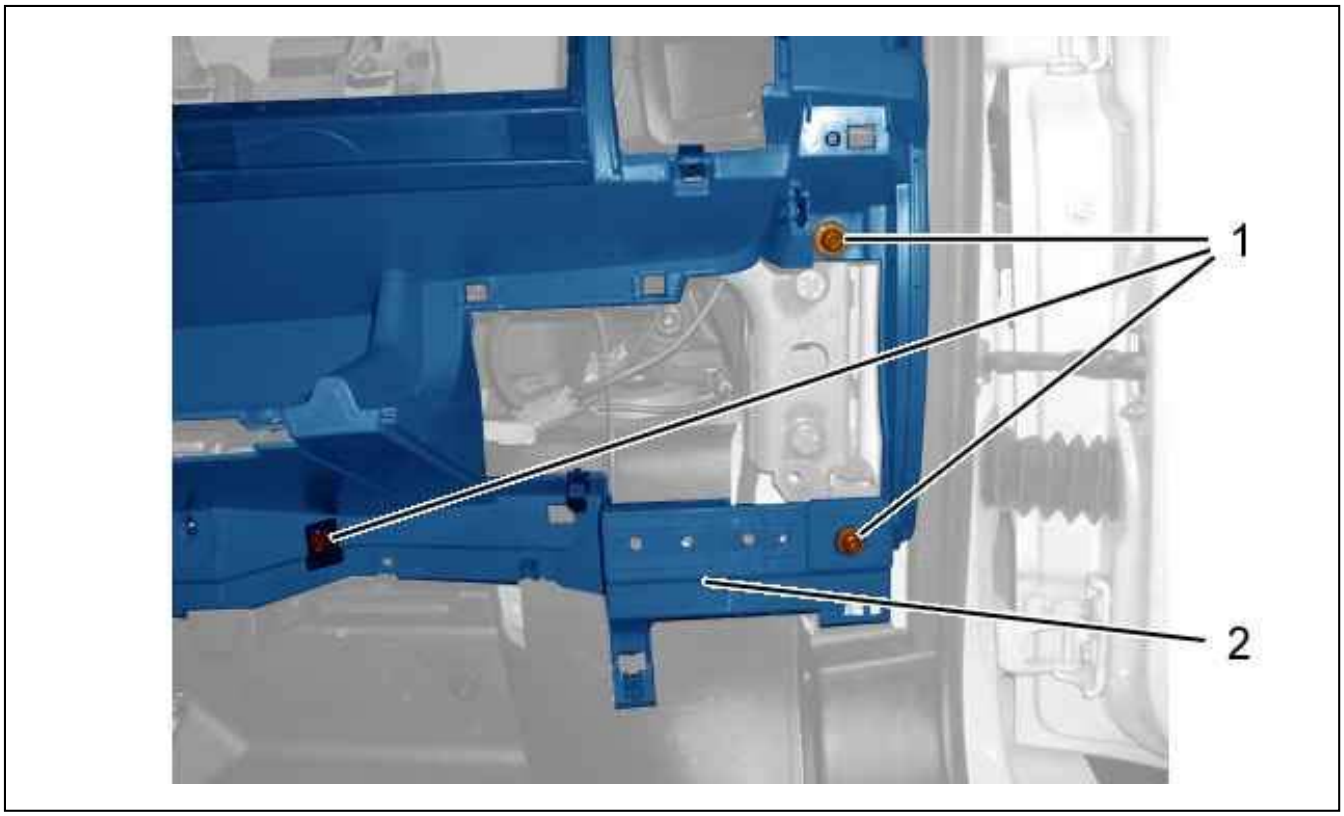

Figure : C5FP0Y4D

Remove the fascia (2) bolts (1).

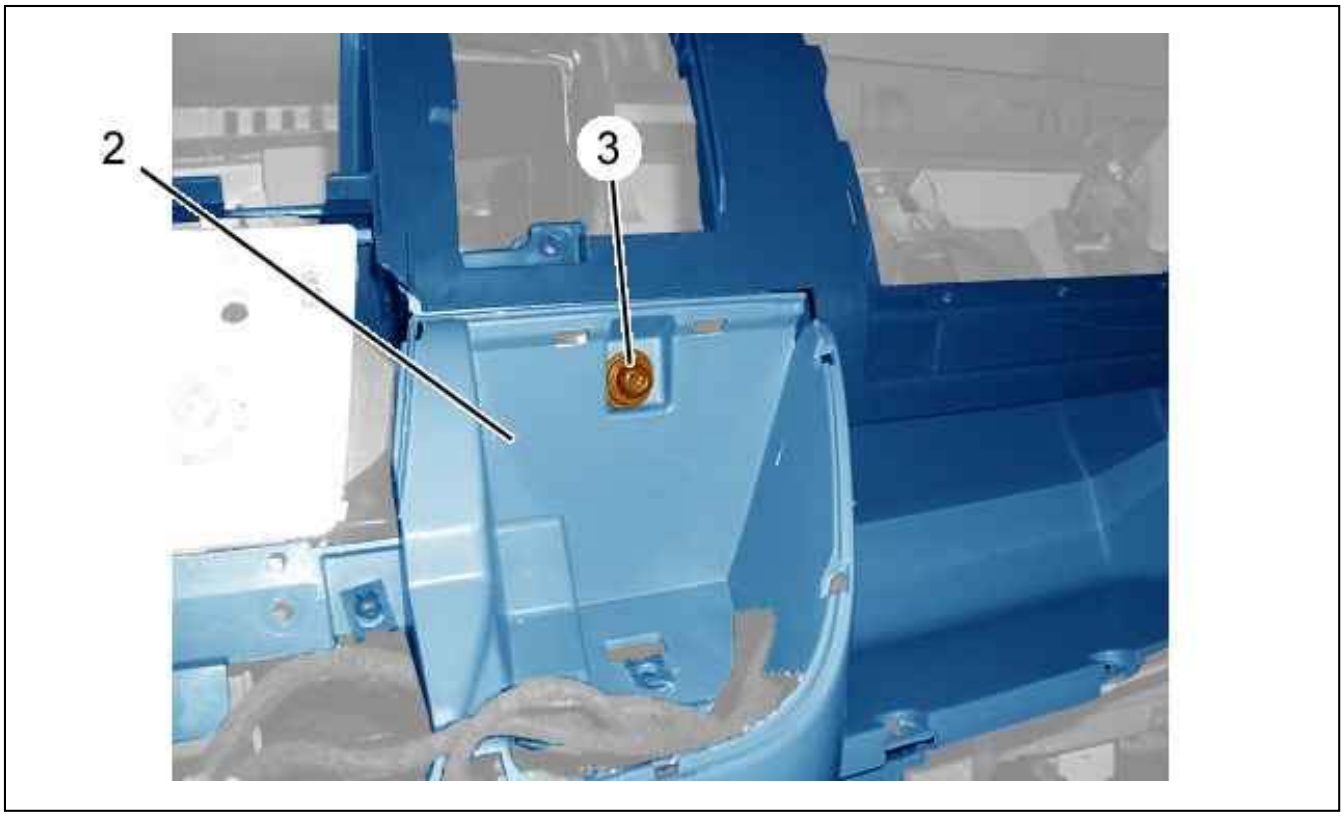

Figure : C5FP0Y5D

Remove the fascia (2) bolt (3).



Figure : C5FP0Y6D

Remove the fascia (2) bolt (4).

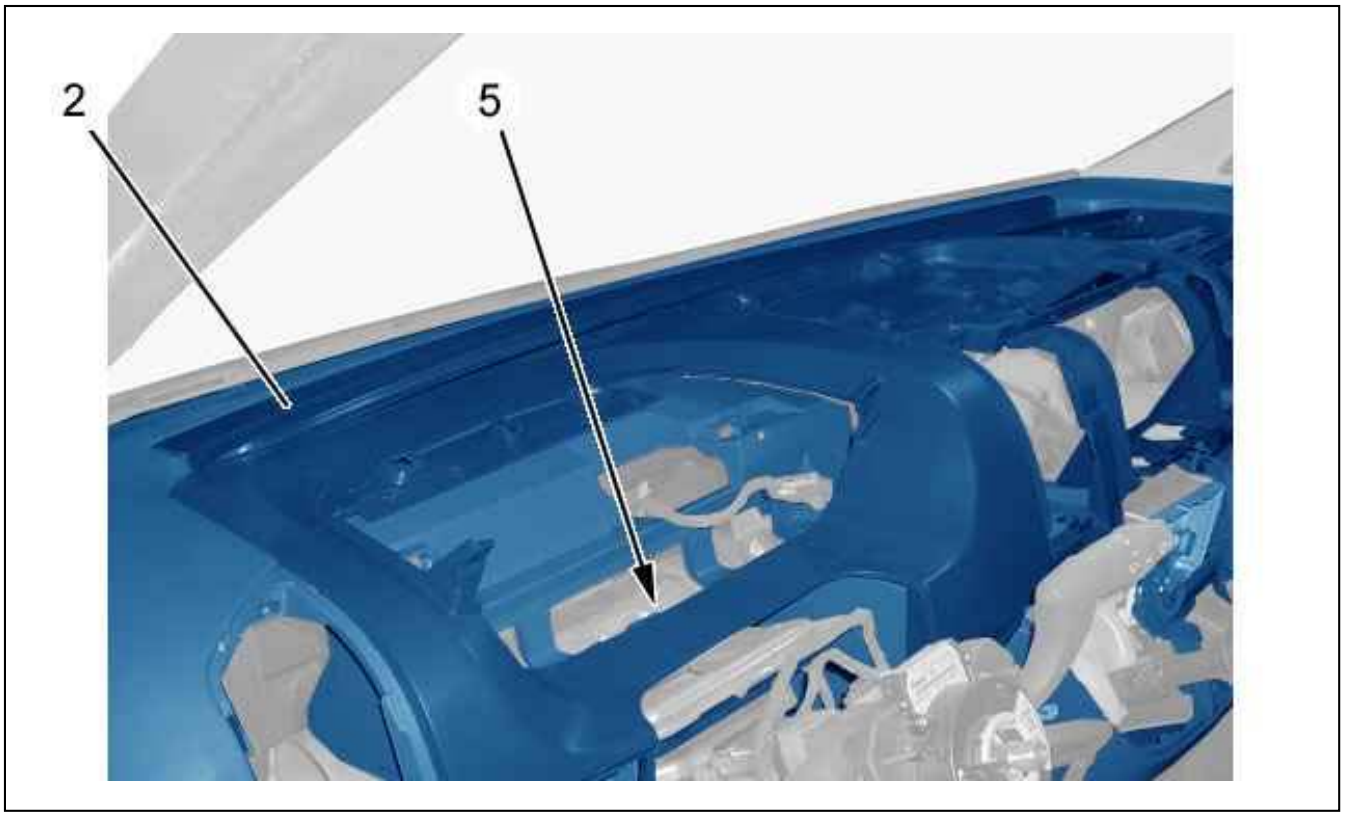

Figure : C5FP0Y7D

Remove the fascia (2) bolt (5).

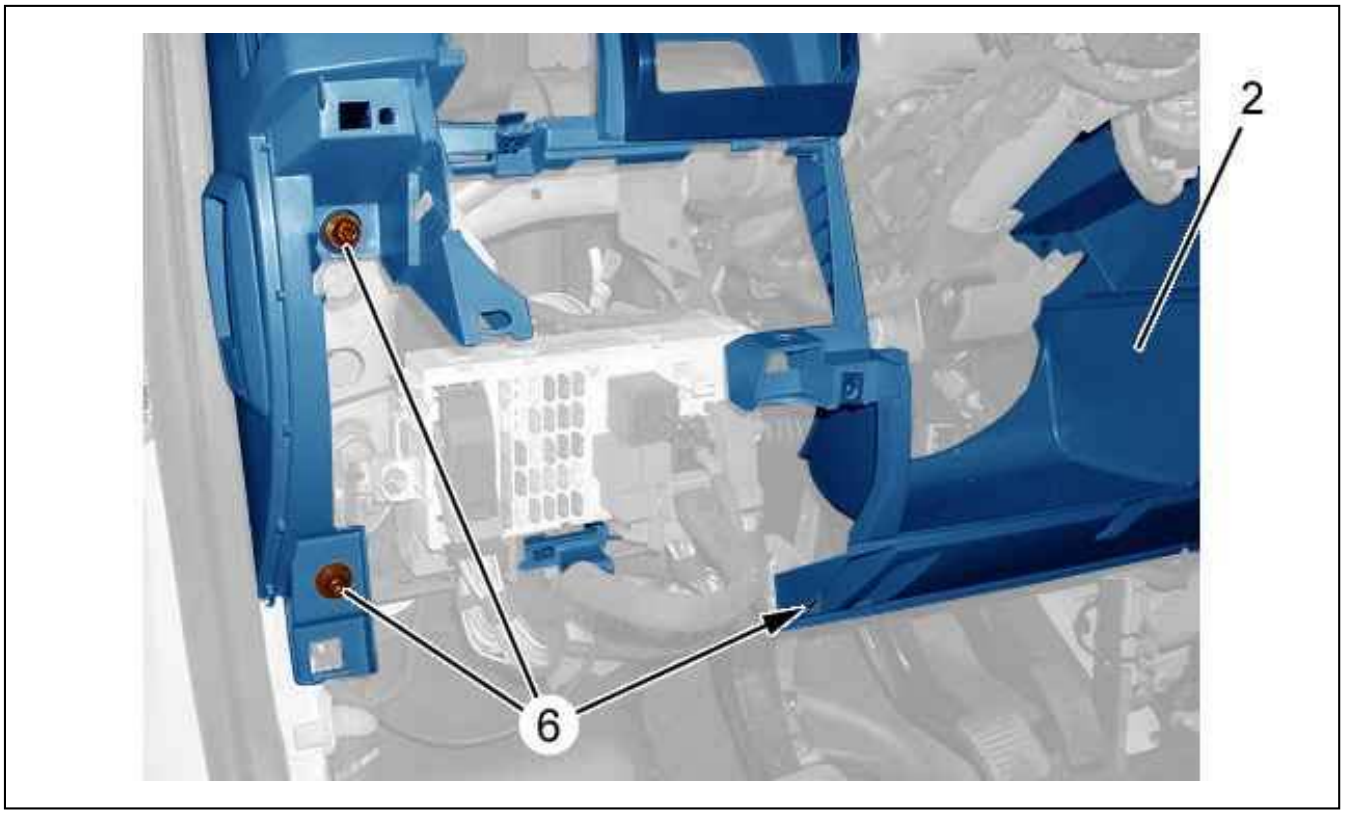

Figure : C5FP0Y8D

Remove the fascia (2) bolts (6).

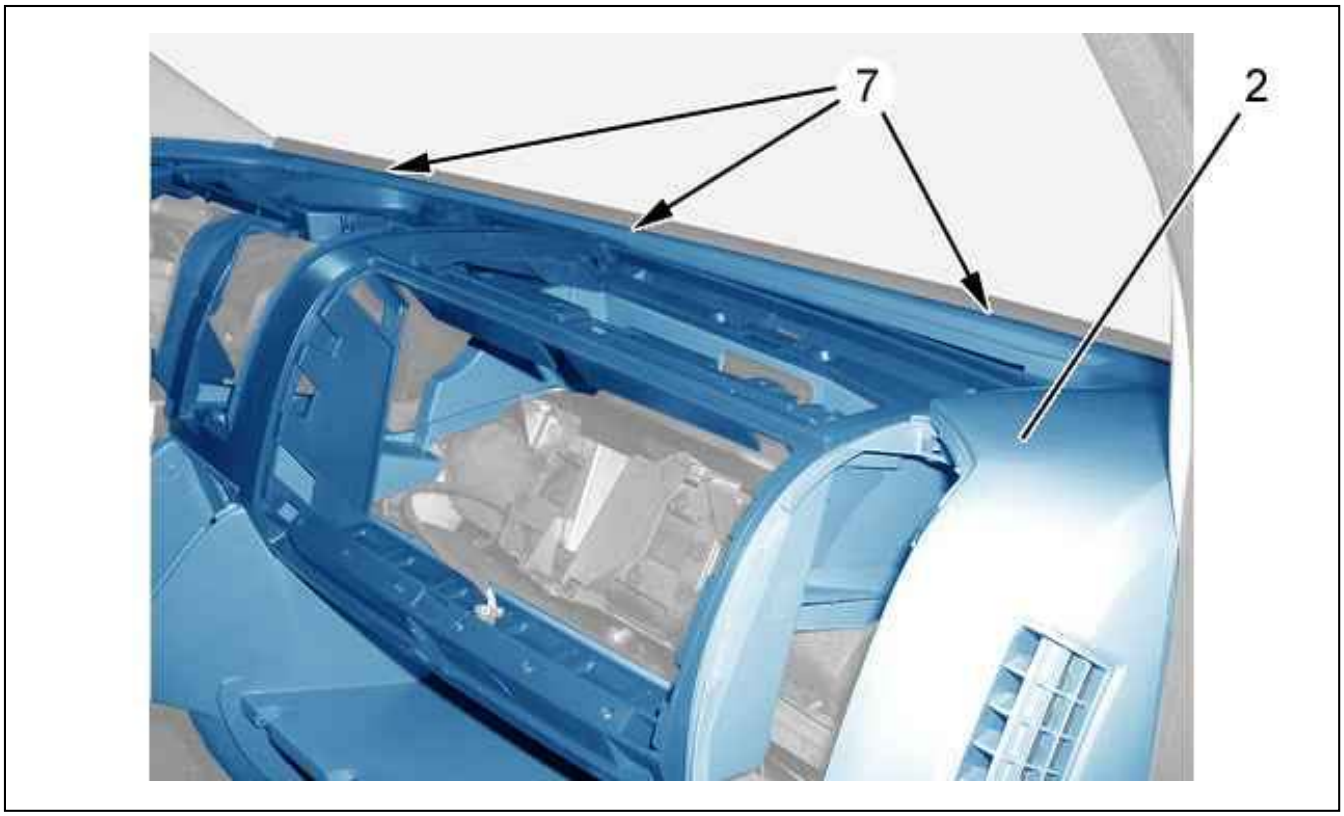

Figure : C5FP0Y9D

Remove the fascia (2) bolts (7).

CAUTION : Two people are required to perform the following operation.

Disengage and remove the fascia (2) (Carefully).

2. Refitting

CAUTION : Two people are required to perform the following operation.

Engage and refit the fascia (Carefully).
Proceed in the reverse order to removal.
Reconnect the battery.
Check all the equipment works.
Tighten the bolts (1), (3), (4), (5), (6), (7) to 0,8 ± 0,08 daN.m.

REMOVING - REFITTING : FASCIA CROSSMEMBER

1. Removing

Remove :

- The fascia (see the relevant operation)
- The built-in systems interface (see the relevant operation)
- The selection lever (see the relevant operation)
- The steering column (see the relevant operation)

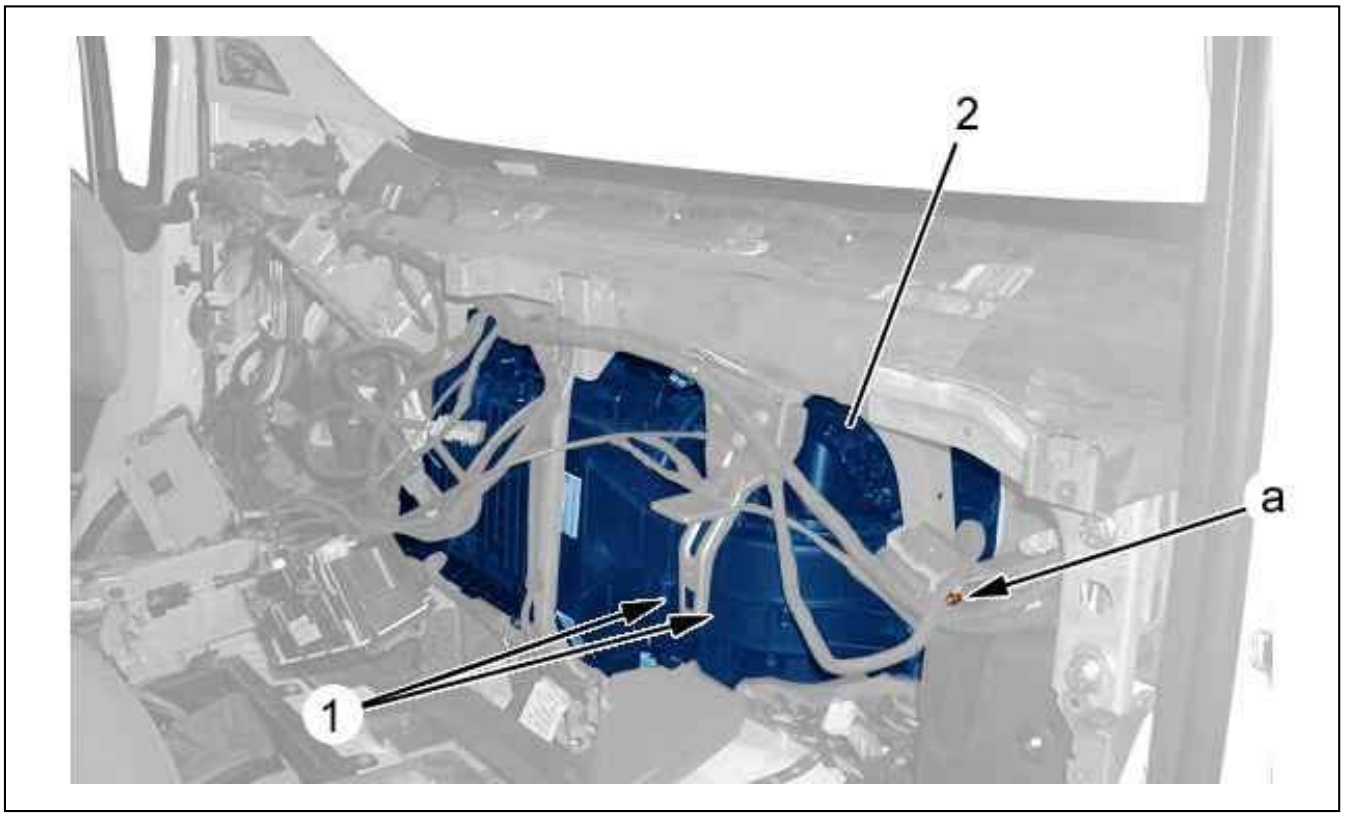

Figure : C5FP0YCD

Remove :

- The heater (2) bolt (at "a")
- The bolts (1)

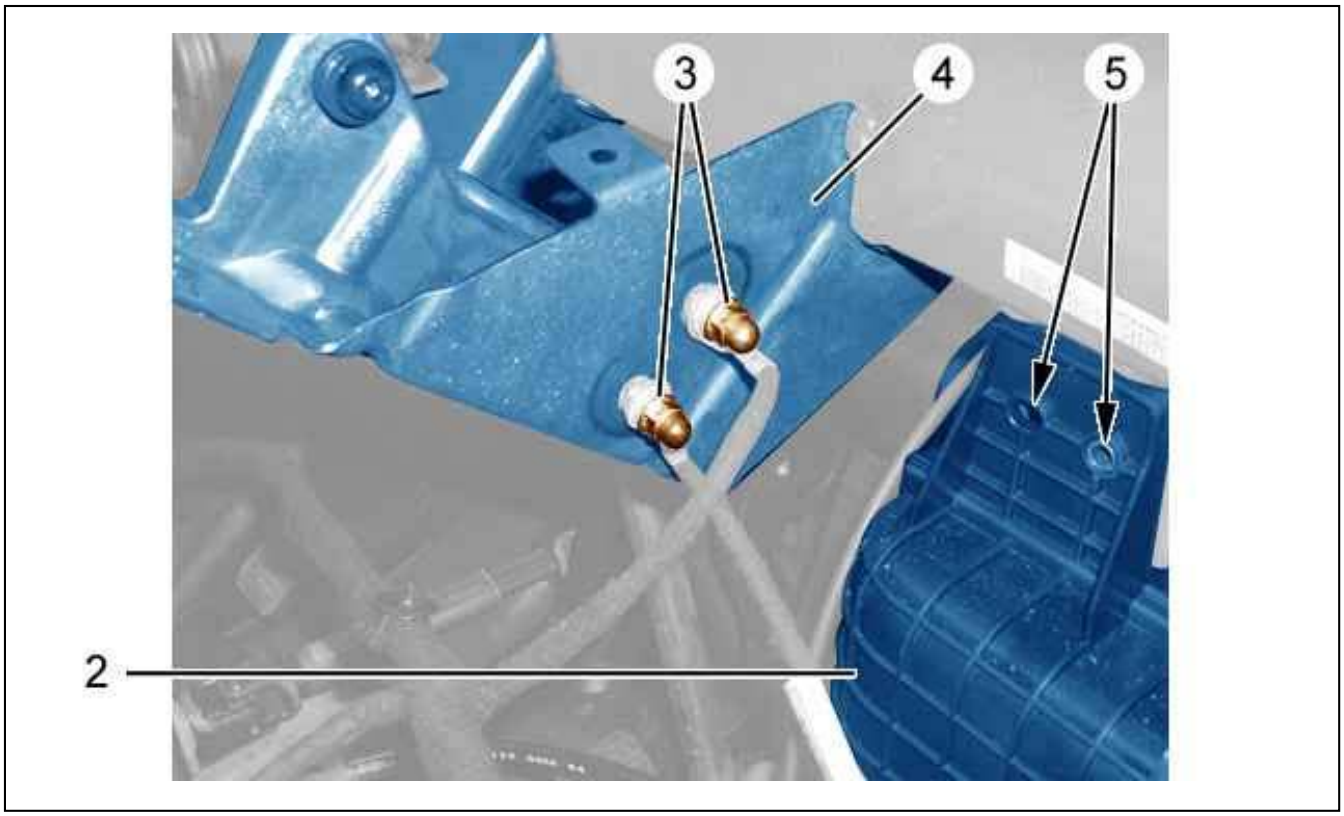

Figure : C5FP0YDD

Remove the gear lever support (4) bolts (3).
Disengage the earth wires.
Remove the heater (2) bolts (5).

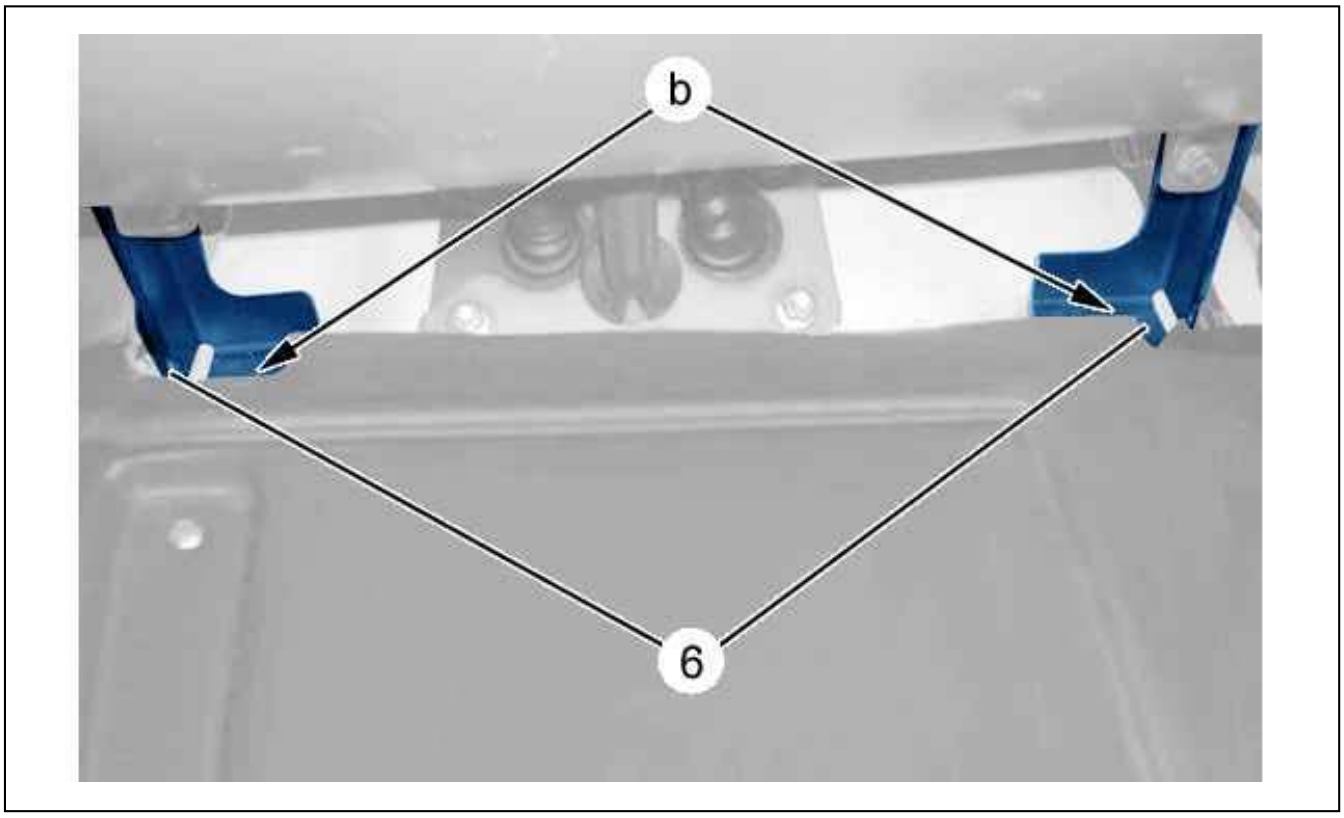

Figure : C5FP0YED

Remove the strengthening pillar (6) bolts (at "b").

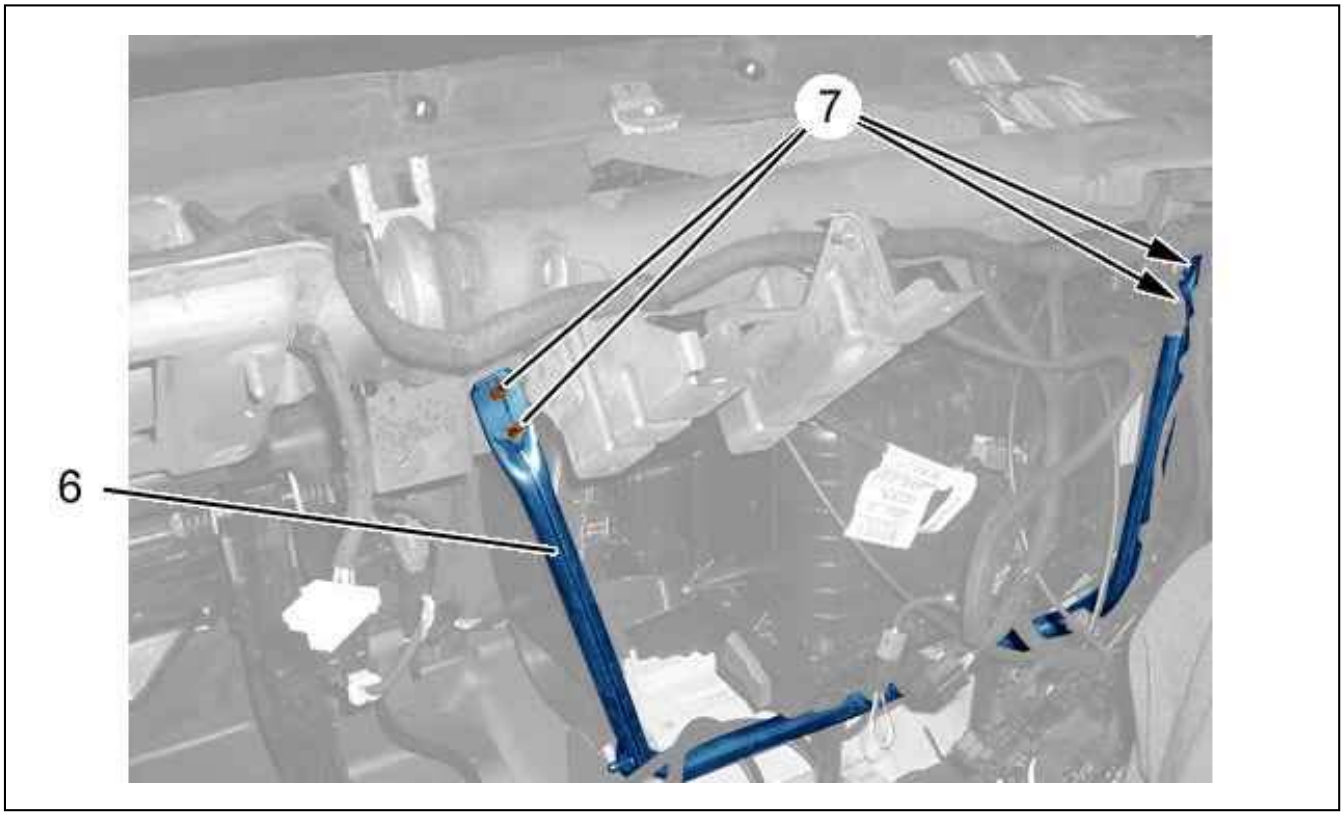

Figure : C5FP0YFD

Remove :

- The bolts (7)
- The strengthening strut (6)

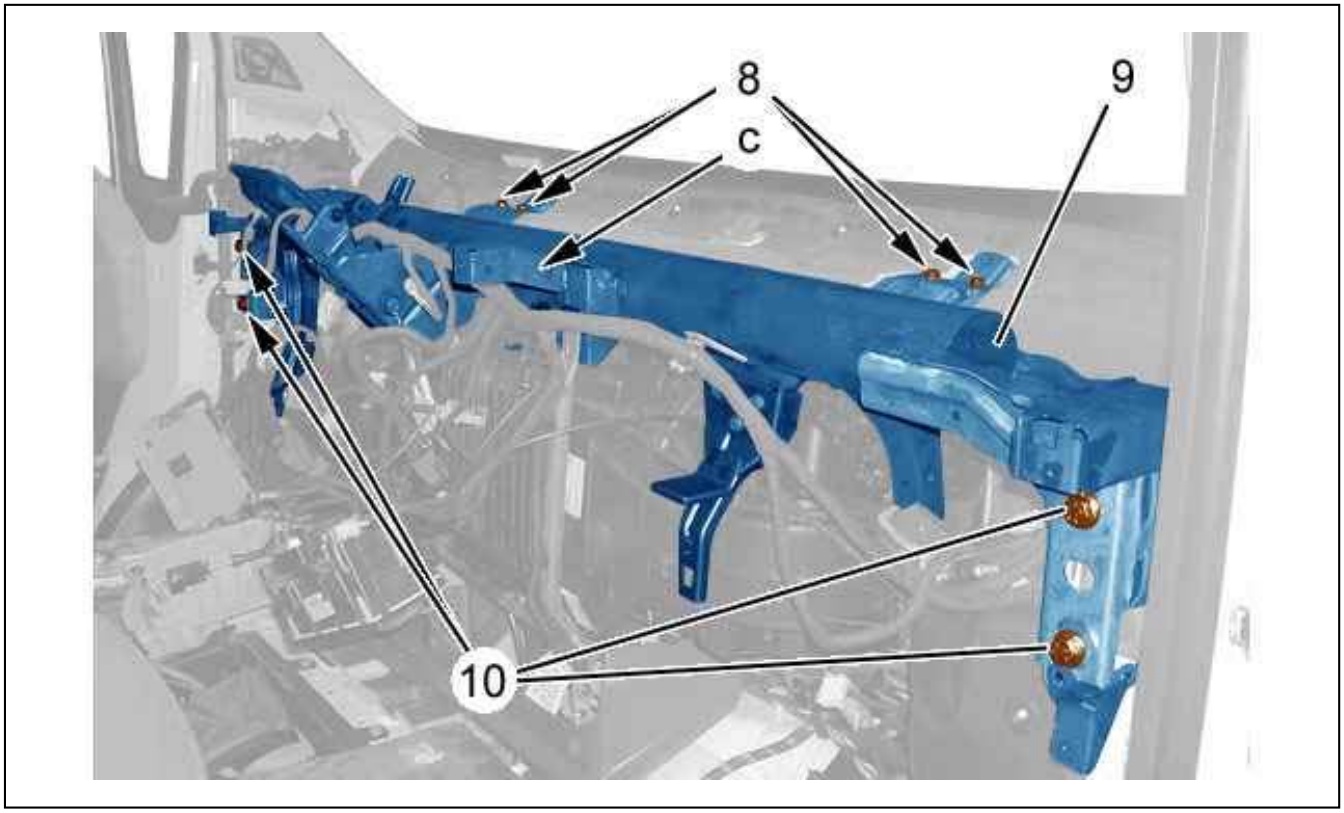

Figure : C5FP0YHD

Remove :

- The bolts (8)
- The fascia crossmember (9) bolts (at "c")
- The bolts (10)

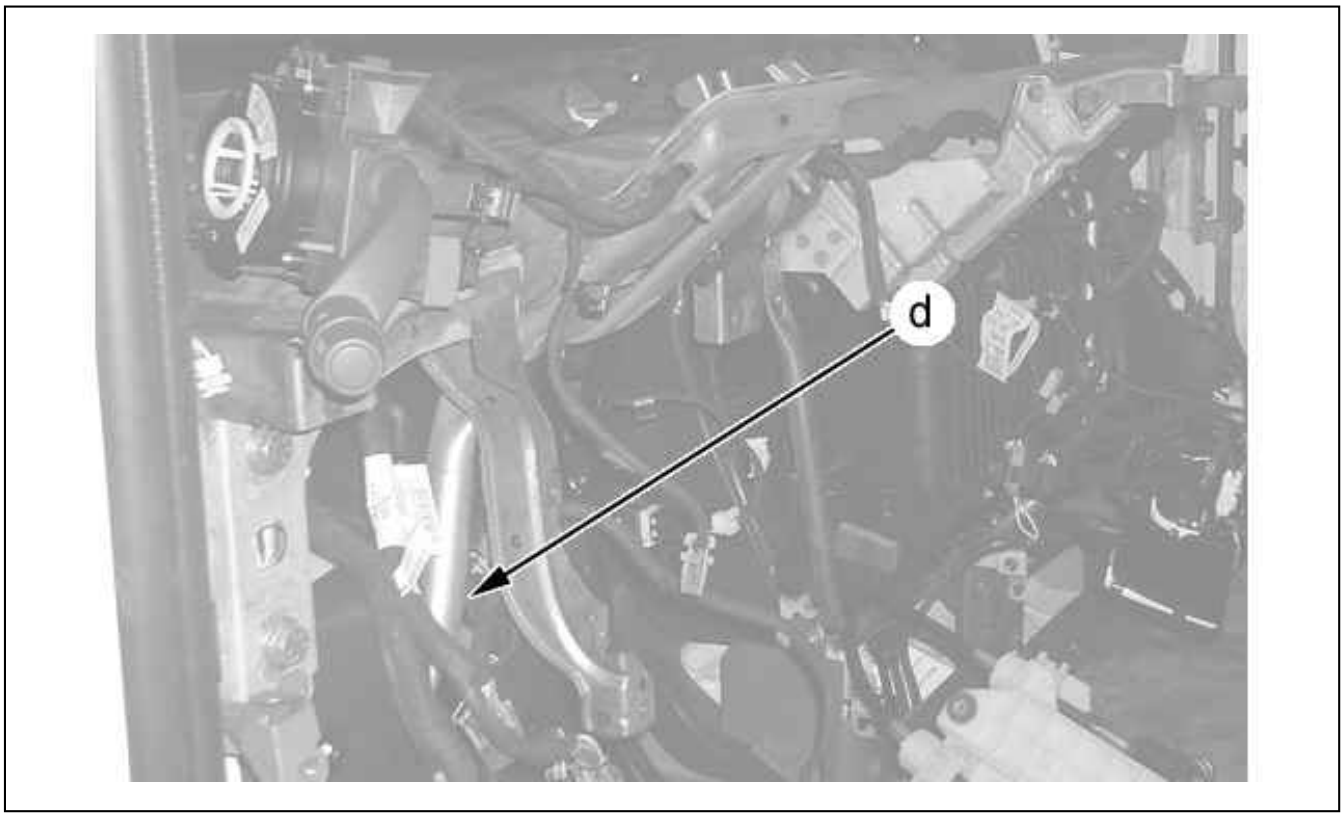

Figure : C5FP0YJD

Remove :

- The strengthener bolt (at "d")
- The fascia crossmember harness
- The dashboard cross member (9)

2. Refitting

Proceed in the reverse order to removal.
Tighten :

- The screws at " b ", "c" and "d" : 0,8 ± 0,1 daNm
- The screws (1), (3), (5) and (7) : 0,8 ± 0,1 daNm
- The bolts (8) : 1,5 ± 0,1 daNm
- The bolts (10) : 3,5 ± 0,3 daNm

REMOVING - REFITTING : AIR CONDITIONING CONTROL PANEL

ESSENTIAL : Observe the safety and cleanliness recommendations .

1. Presentation



Figure : C5FG08LD

(1) Air conditioning control panel .

2. Preliminary operations

Remove :

- The fascia
- The dashboard cross member

3. Removing

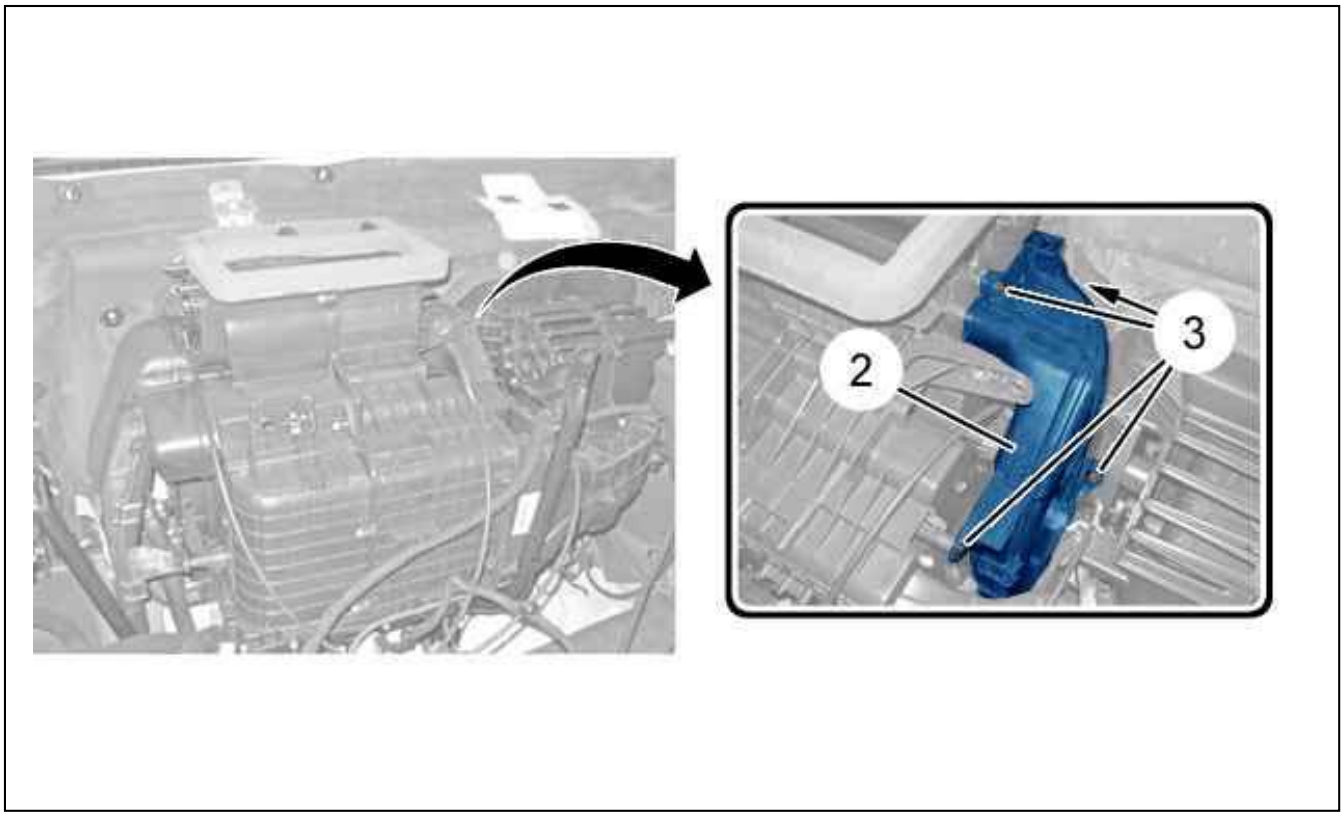

Figure : C5HG0FHD

Remove the bolts (3).
Detach then remove : The pipe (2).

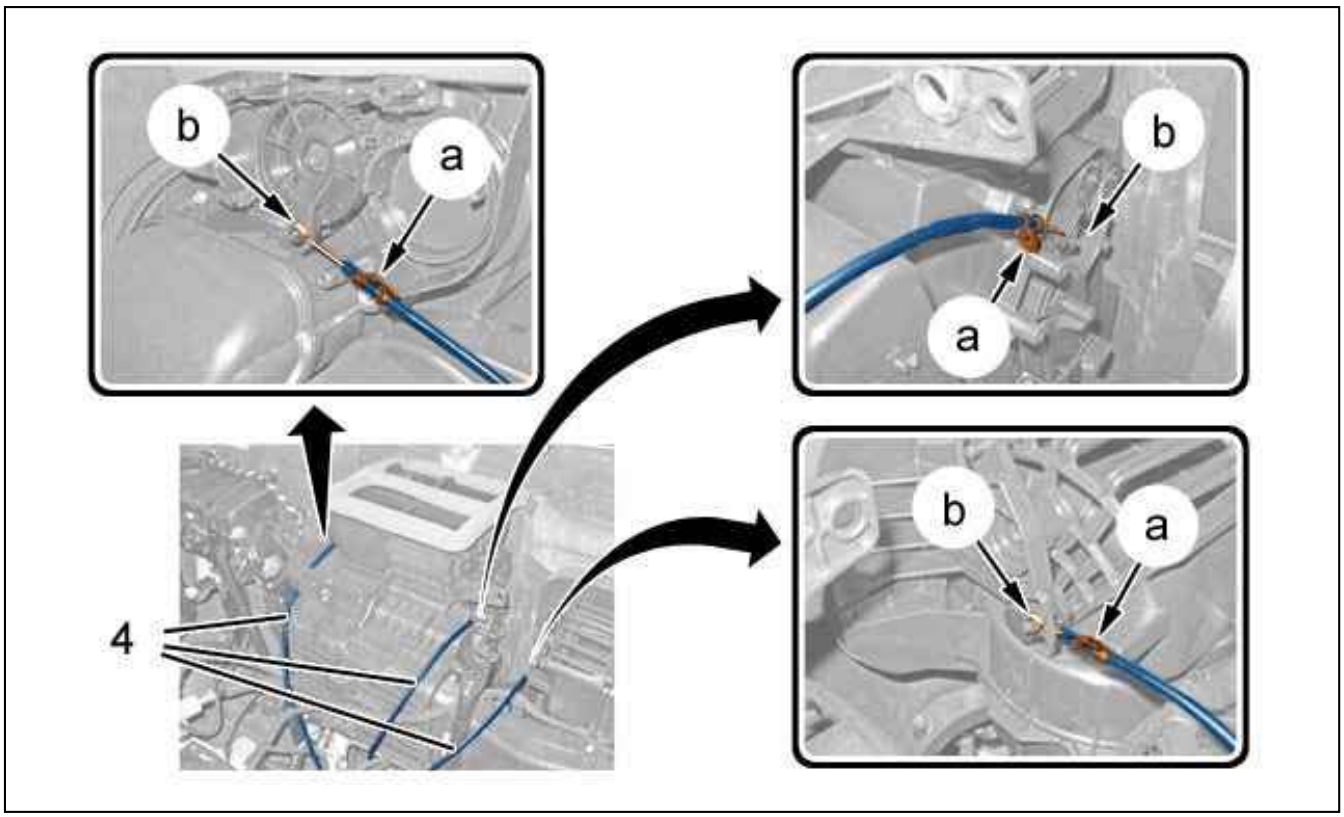

Figure : C5HG0FID

Unclip the cables (4) (at "a", "b") ; Using a thin screwdriver.

Remove the air conditioning control panel (1).

4. Refitting

CAUTION : Always replace the faulty fixings of the cable .

Proceed in the reverse order to removal.
Check the operation of the equipment.

REMOVING - REFITTING : FASCIA PANEL AIR VENTS

ESSENTIAL : Observe the safety and cleanliness recommendations .

1. Tooling

tool	Reference	Designation
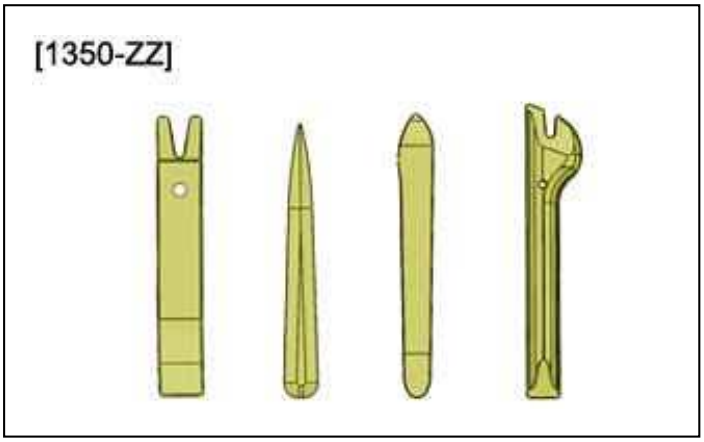 Figure : E5AG02MT	[1350-ZZ]	Stripping tools

2. Removing

2.1. Air vents (At the centre of the fascia panel)

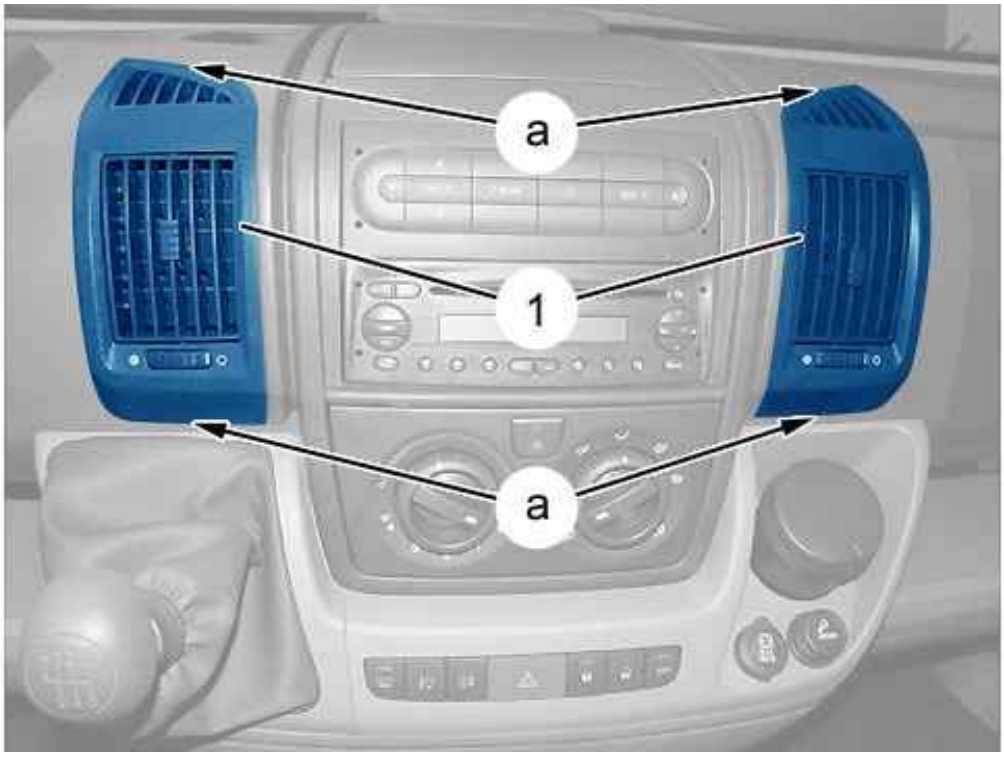

Figure : C5FG0MTD

Unclip : The vents (1) (as "a") ; Using tool [1350-ZZ].
Detach : The vents (1) (Pull outwards).
Remove : The vents (1).

2.2. Vent (On the driver’s side)

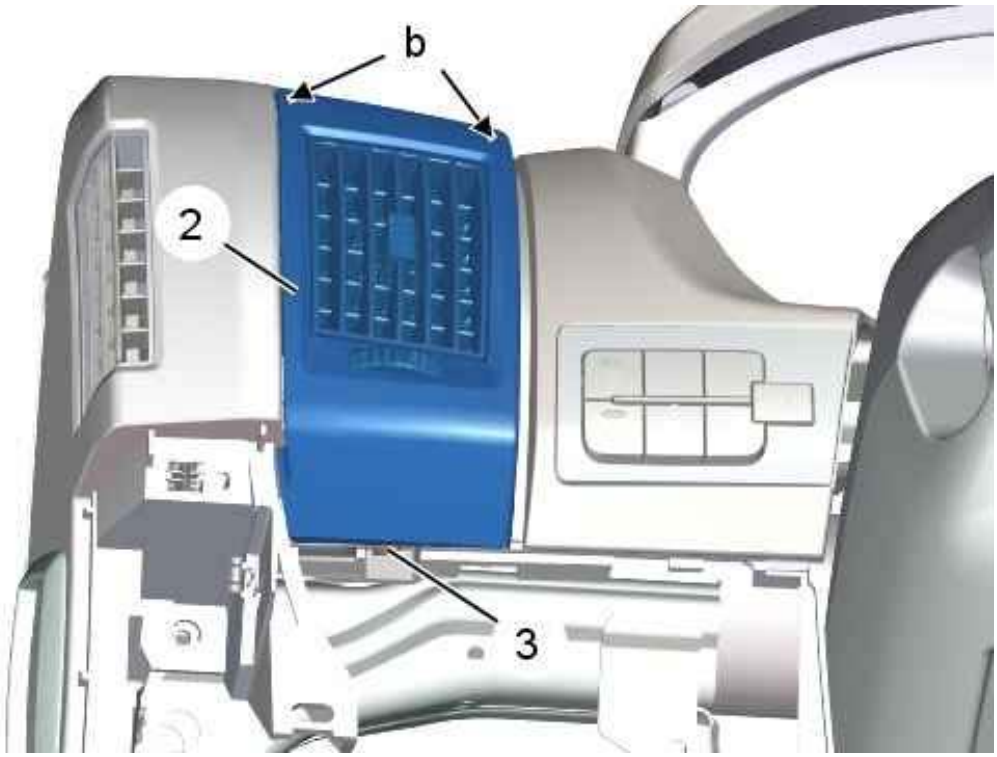

Figure : C5FG0MUD

Remove :

- The trim (Fascia panel switches - On the driver’s side)
- The (3) bolt

Unclip : The air vent (2) (as "b") ; Using tool [1350-ZZ].
Detach : The air vent (2) (Pull outwards).
Remove : The air vent (2).

2.3. Vent (Passenger ’s side)

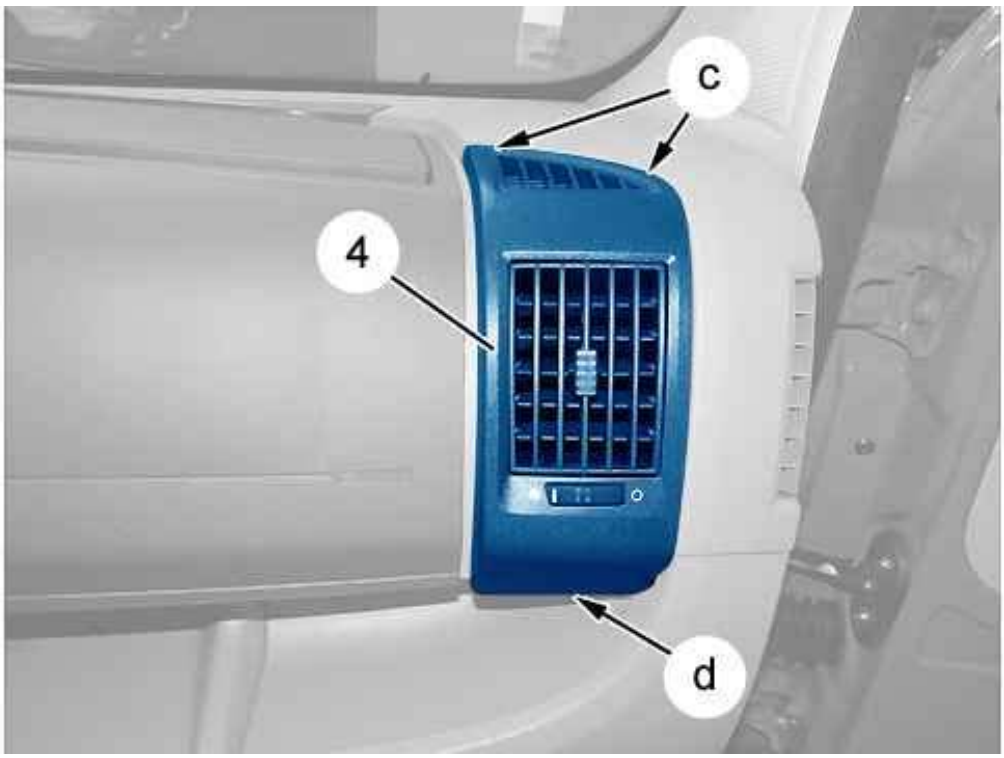

Figure : C5FG0MVD

Remove bolts (as "d").
Unclip : The air vent (4) (as "c") ; Using tool [1350-ZZ].
Detach : The air vent (4) (Pull outwards).
Remove : The air vent (4).

2.4. The fascia upper ventilation grille

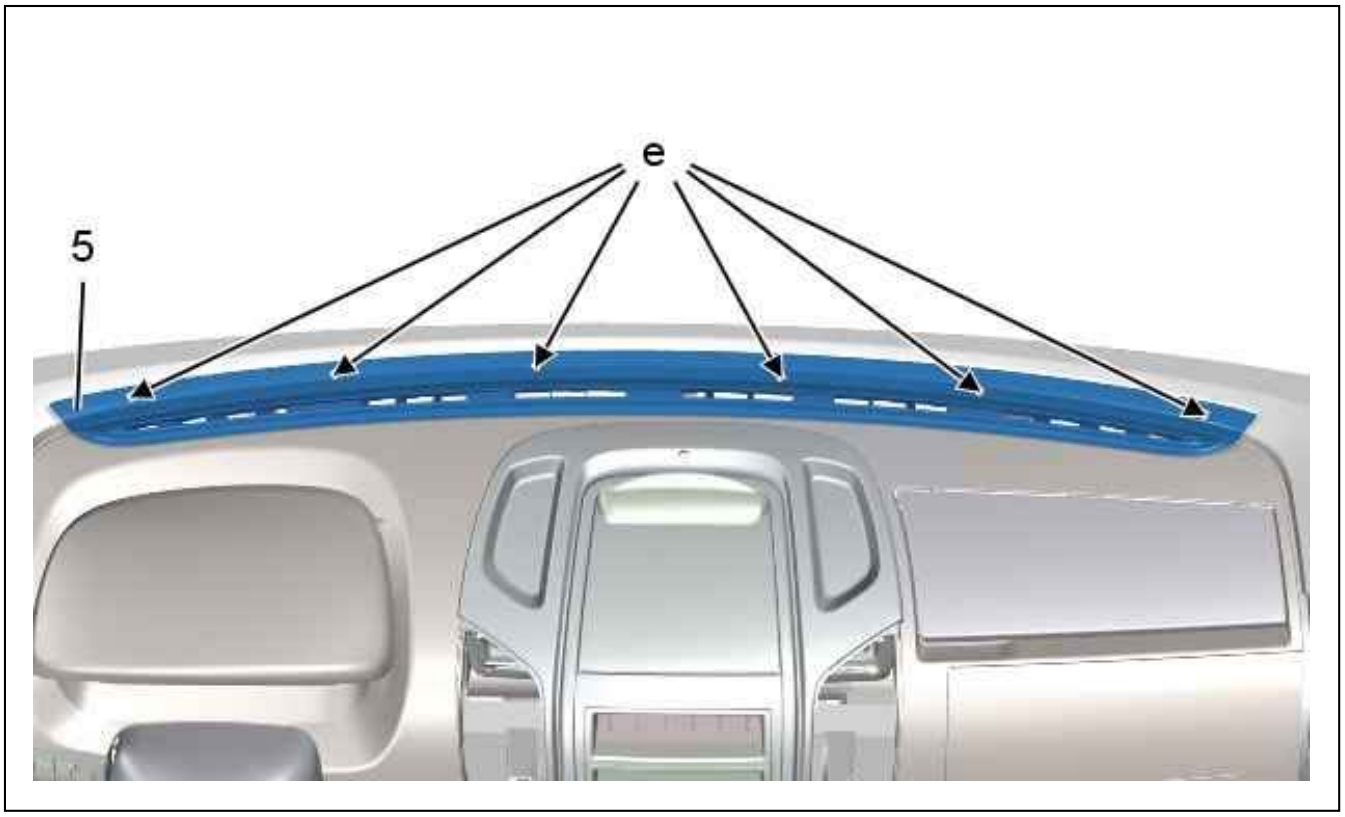

Figure : C5FG0MWD

Unclip the fascia upper ventilation grille (5) (as "e") ; Using tool [1350-ZZ].
Remove the fascia upper ventilation grille (5).

3. Refitting

Proceed in the reverse order to removal.
Check all the equipment works.

REMOVING - REFITTING : FASCIA STORAGE COMPARTMENT (R.H.D.)

ESSENTIAL : Observe the safety and cleanliness recommendations .

1. Tooling

tool	Reference	Description
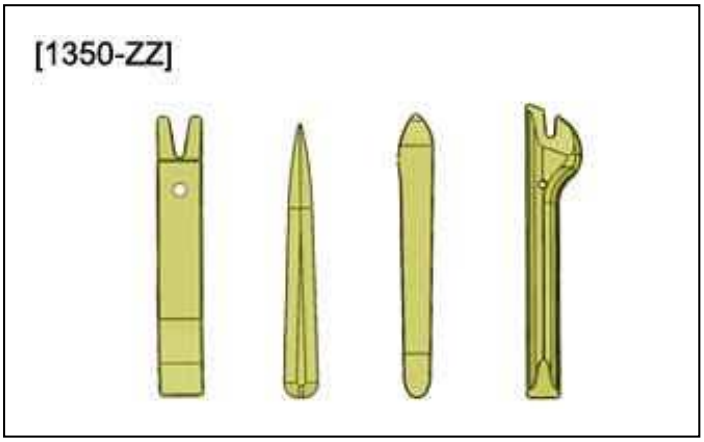 Figure : E5AG02MT	[1350-ZZ]	Stripping tool

2. Removing

2.1. Glovebox (At the centre of the fascia panel)

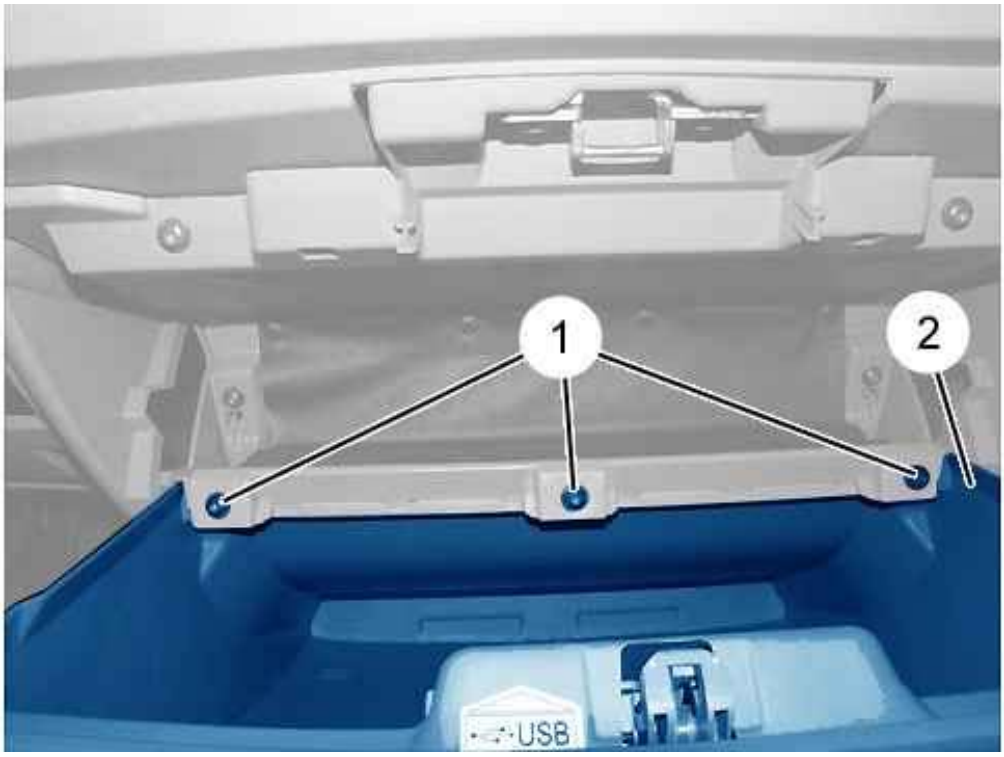

Figure : C5FG0MYD

Open the cover (2) of the glove box.
Remove the bolts (1).
Detach and remove the glove box lid (2).

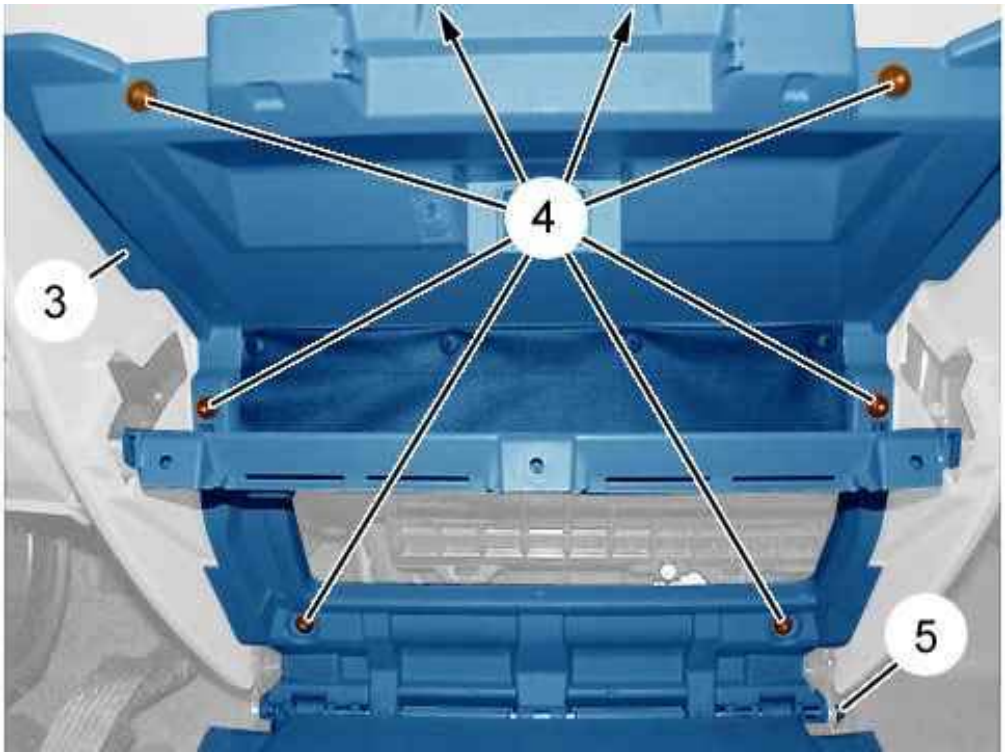

Figure : C5FG0N1D

Remove the bolts (4).
Unscrew nut (5).
Release the glove box (3).
Remove the glove box (3).

2.2. Fascia lower oddment pocket (Passenger ’s side)



Figure : C5FG1GGD

Open the cover (6) of the glove box.
Unclip : The glove box lid (6) (as "a") ; Using tool [1350-ZZ].
Detach : The glove box lid (6).



Figure : C5FG1GHD

Remove :

- The bolts (7), (8)
- The glove box (9)

2.3. Fascia upper glovebox (Passenger ’s side)

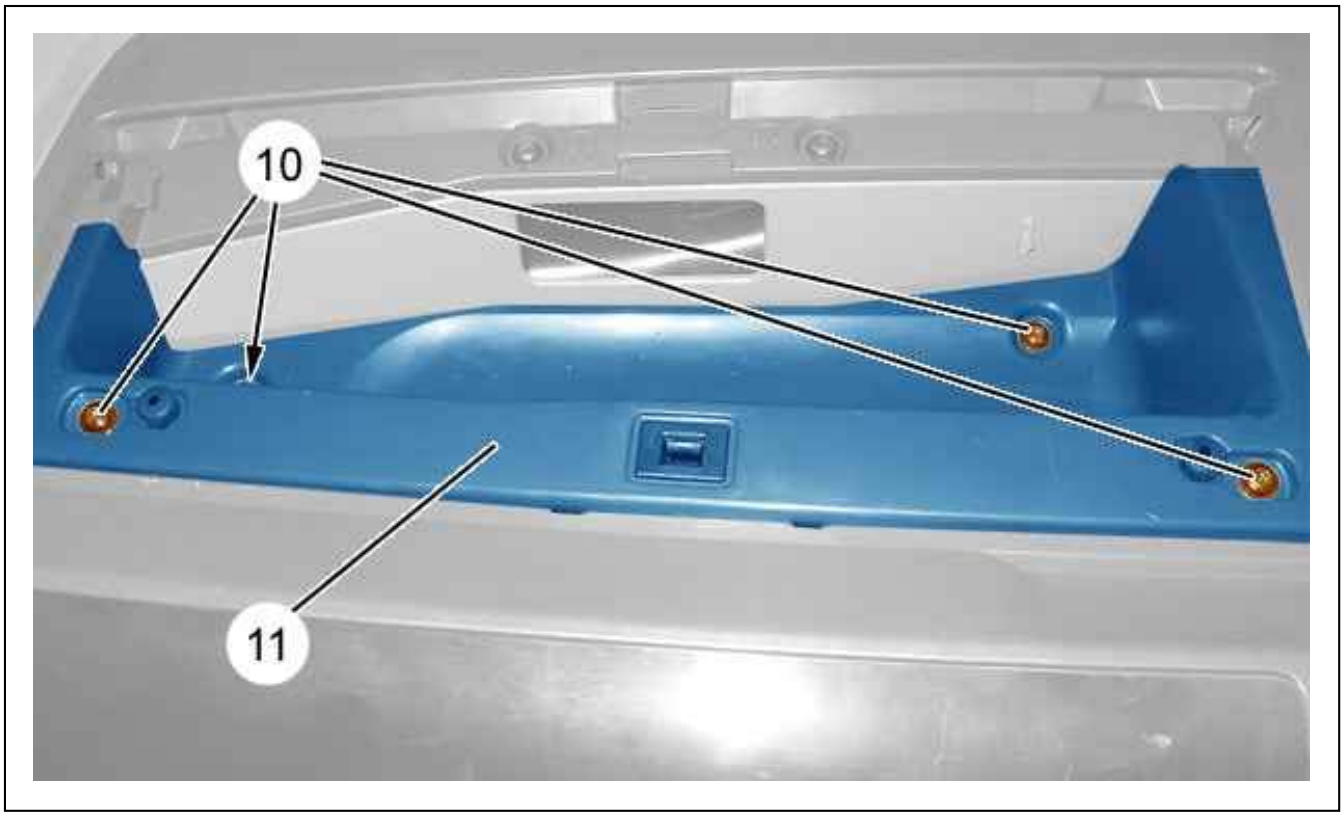

Figure : C5FG1GID

Remove :

- The bolts (10)
- The bottom of the storage compartment (11)

3. Refitting

Proceed in the reverse order to removal.
Check the operation of the equipment.

REMOVING - REFITTING : DASHBOARD (R.H.D.)

ESSENTIAL : Observe the safety and cleanliness recommendations .

1. Tooling

tool	Reference	Designation
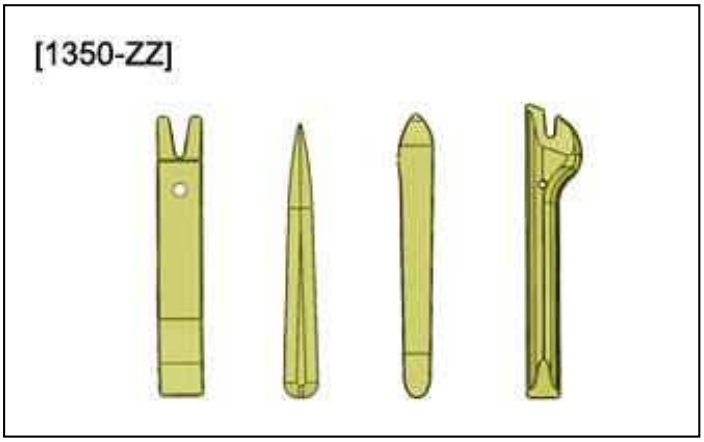 Figure : E5AG02MT	[1350-ZZ]	Stripping tools

2. Preliminary operations

Disconnect the battery .

Remove :

- The storage compartments
- The fascia panel switches
- The dashboard vents
- The hands-free kit
- The audio system
- The movable shelf
- The dashboard central trim
- The bonnet release
- The instrument panel
- The steering column
- The passenger air bag

Disengage the air conditioning control panel from its housing .

3. Removing

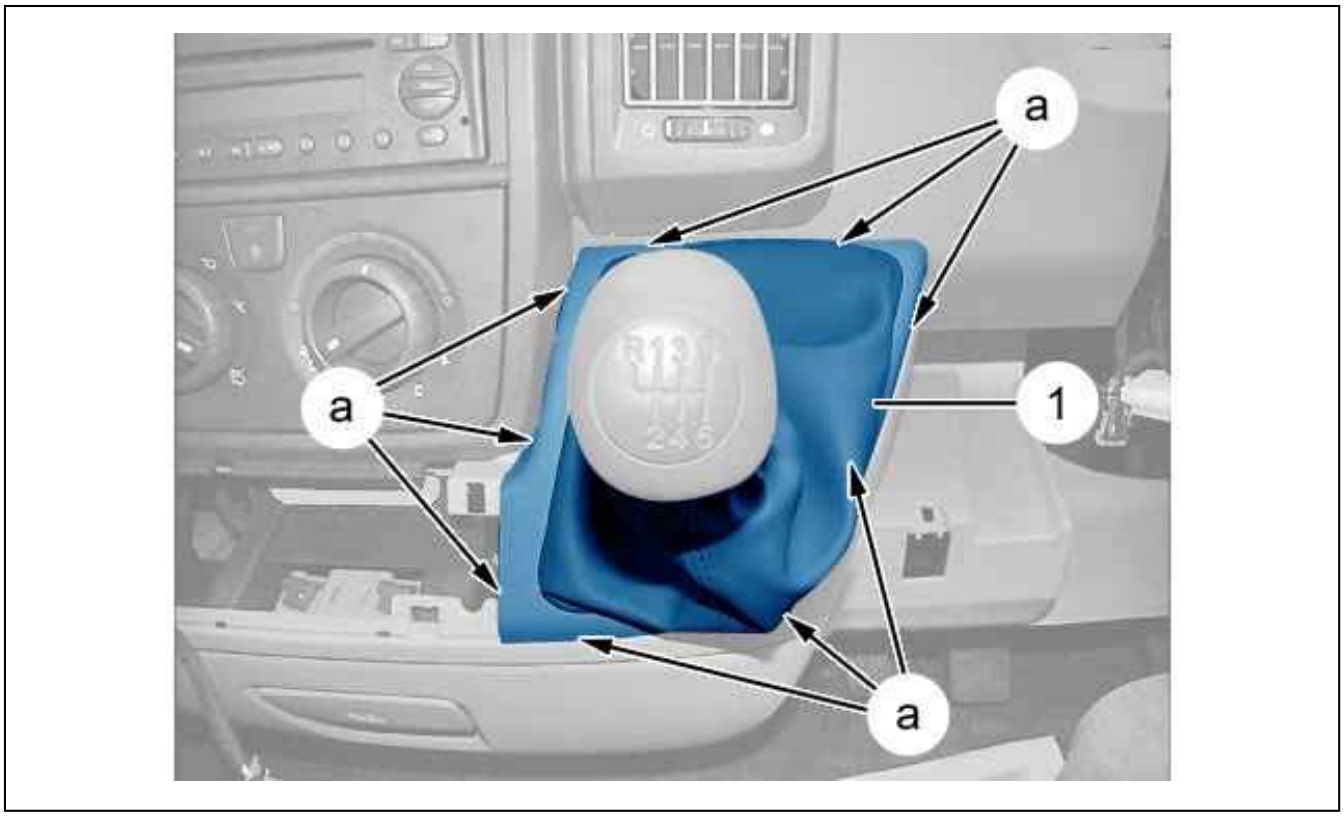

Figure : C5FG1GJD

Unclip the gear lever gaiter (1) (as "a") ; Using tool [1350-ZZ].
Detach - Remove : The gear lever gaiter (1) (Carefully).

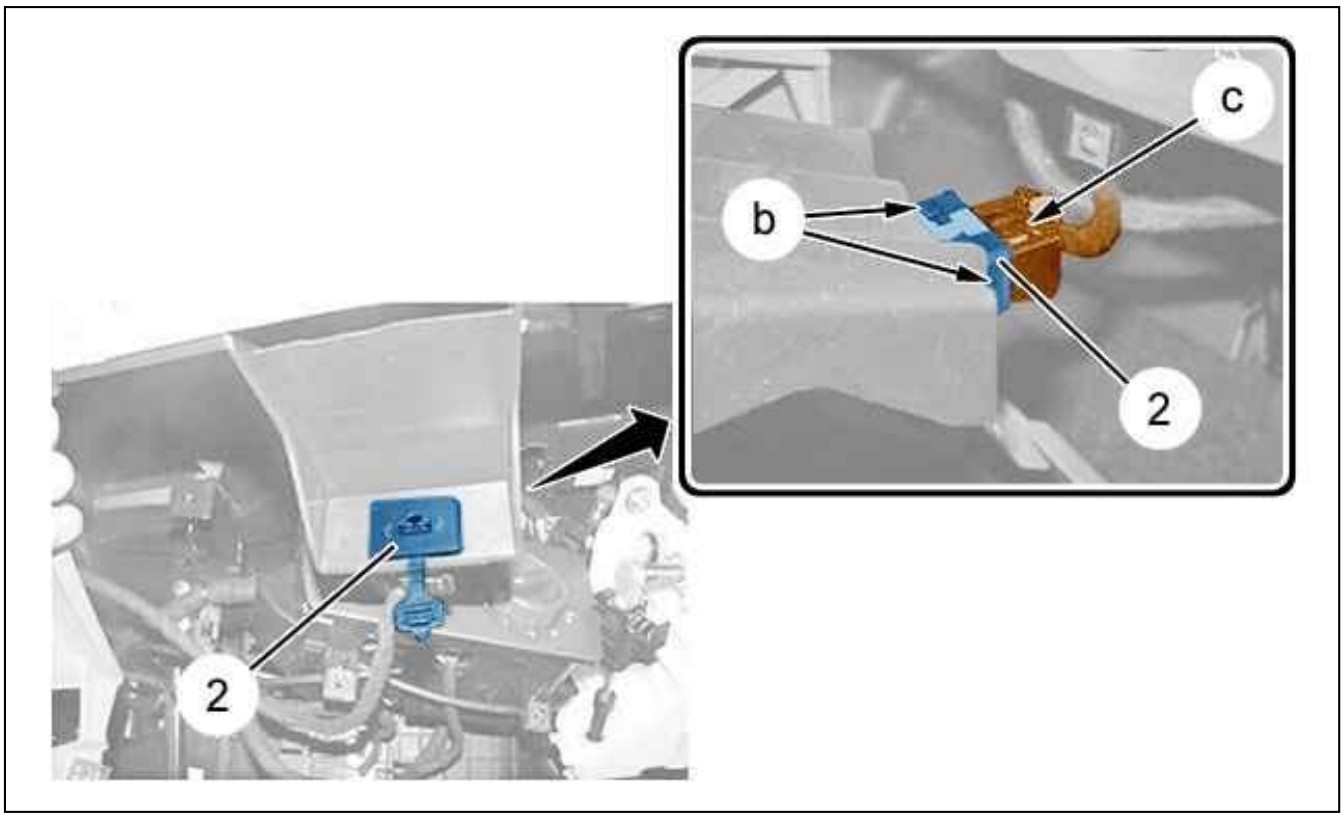

Figure : C5FG1GKD

N.B. : Location : Dashboard central storage compartment.

Disconnect the connector (as "c").
Unclip : The USB BOX socket (2) (as "b") ; Using tool [1350-ZZ].
Detach - Remove : The USB BOX socket (2).

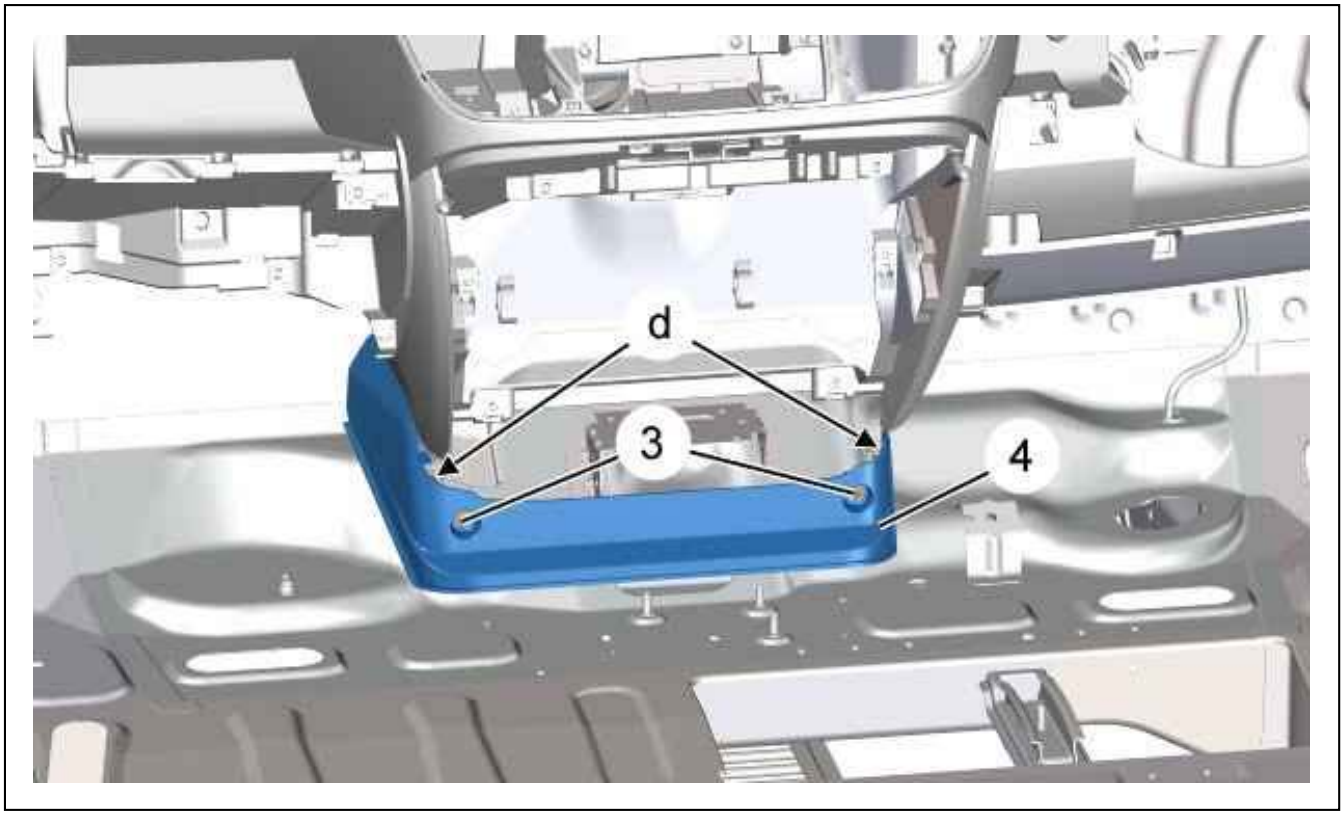

Figure : C5FG1GLD

Remove the bolts (3).
Unclip the dashboard lower trim (4) (as "d") ; Using tool [1350-ZZ].
Remove the dashboard lower trim (4).

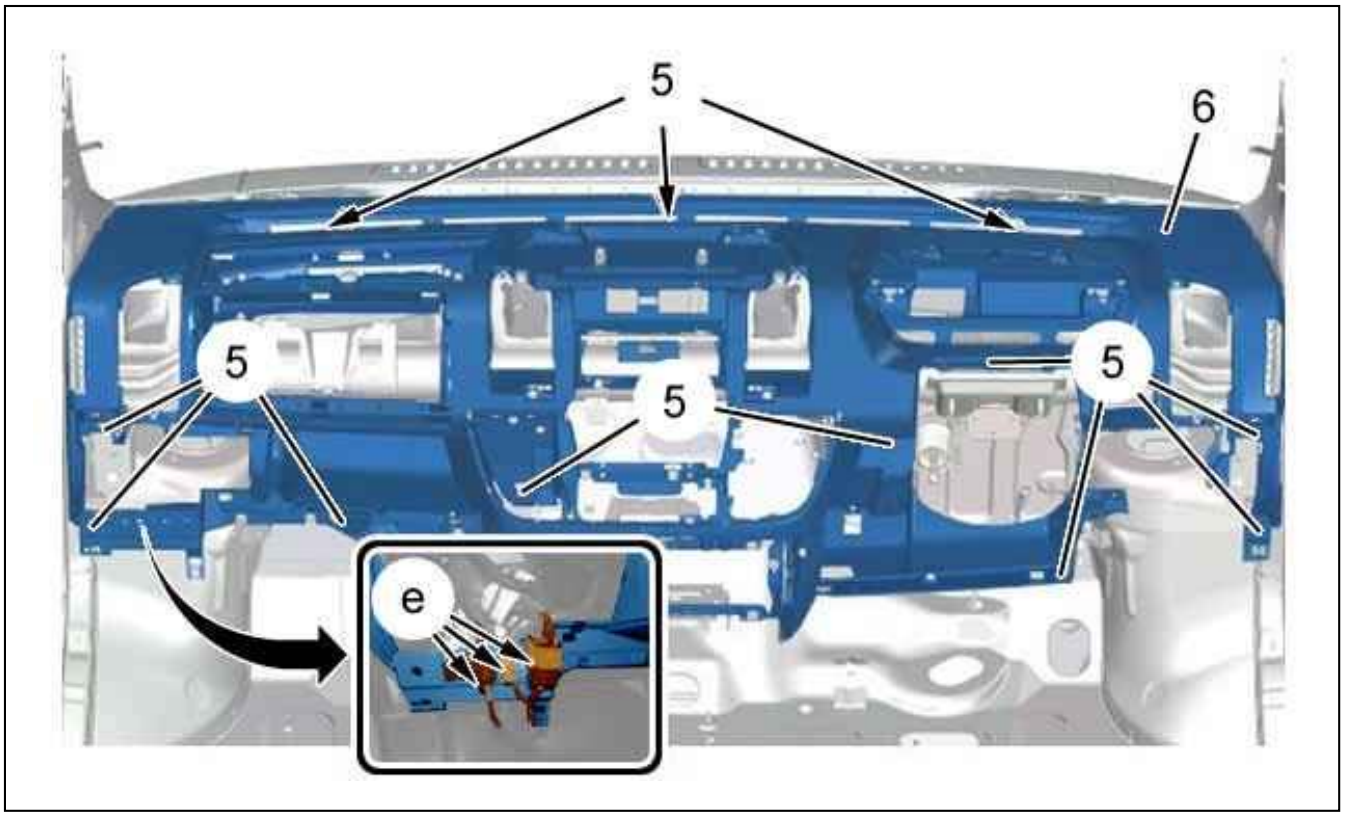

Figure : C5FG1GMD

Unclip - Disconnect the connectors (as "e").
Remove the bolts (5).

CAUTION : Two people are required to perform the following operation.

CAUTION : Prop up the dashboard (6) at rest on a table, taking care to protect it ; With bubblewrap.

Detach and remove the fascia panel (6) (Carefully).

4. Refitting

CAUTION : Two people are required to perform the following operation.

Engage and refit the fascia (6) (Carefully).
Proceed in the reverse order to removal.
Reconnect the battery.
Check all the equipment works.

REMOVING - REFITTING : AUTOMATIC AIR CONDITIONING CONTROL PANEL

ESSENTIAL : Observe the safety and cleanliness recommendations .

1. Tooling

Tools	Reference	Designation
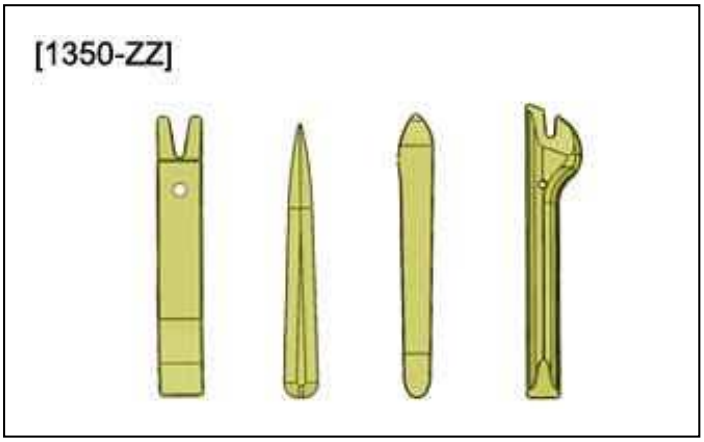 Figure : E5AG02MT	[1350-ZZ]	Stripping tools

2. Removing

Disconnect the battery .

Remove :

- The upper storage tray by the audio system (according to equipment)
- The audio system
- The hands-free kit (according to equipment)
- The dashboard vents

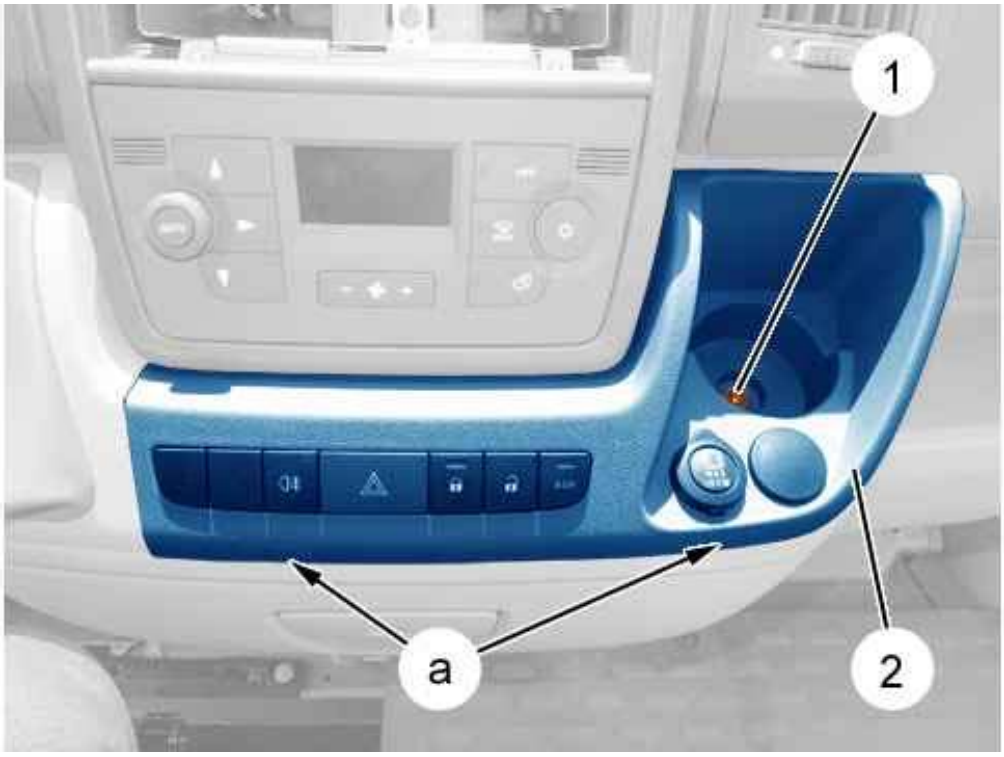

Figure : C5FG1GPD

Remove the bolt (1).
Unclip the trim (2) (at "a") ; Using tool [1350-ZZ].
Release the trim (2).

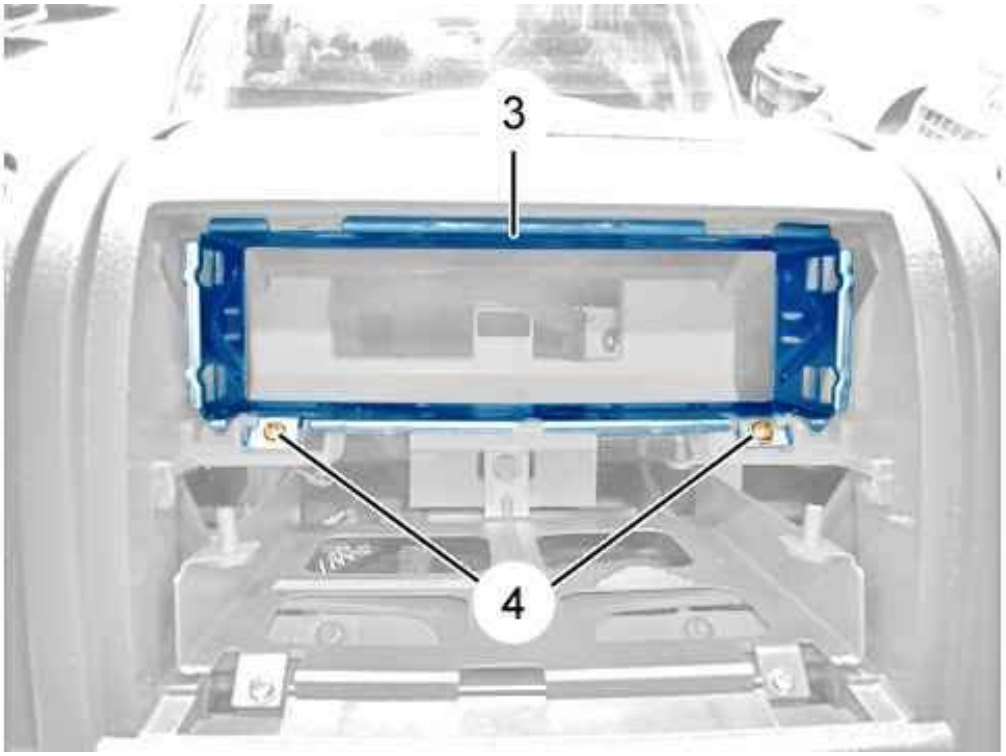

Figure : C5FG1GQD

Remove the bolts (4).
Detach then remove : The audio system bracket (3).

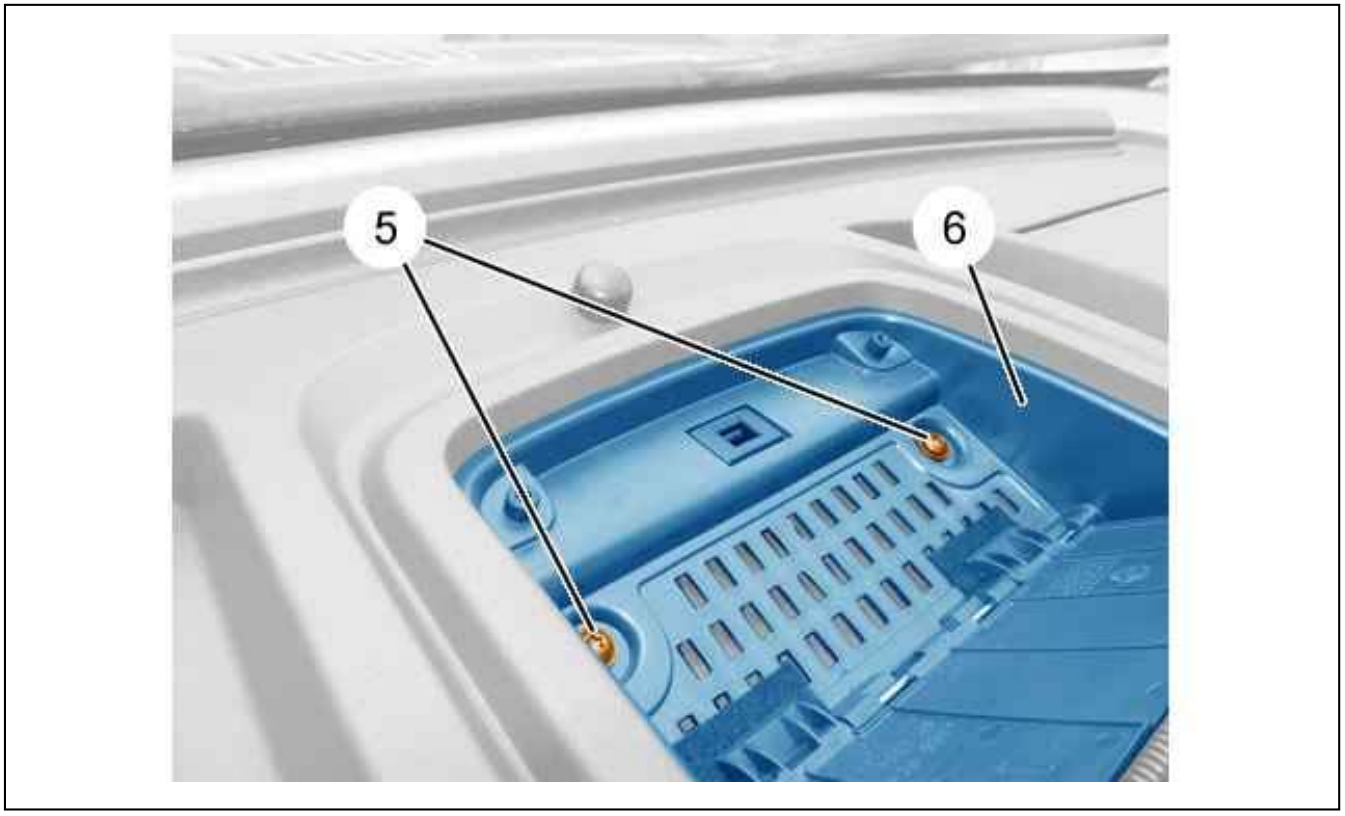

Figure : C5FG1GRD

Open : The movable shelf (6).
Remove the bolts (5).

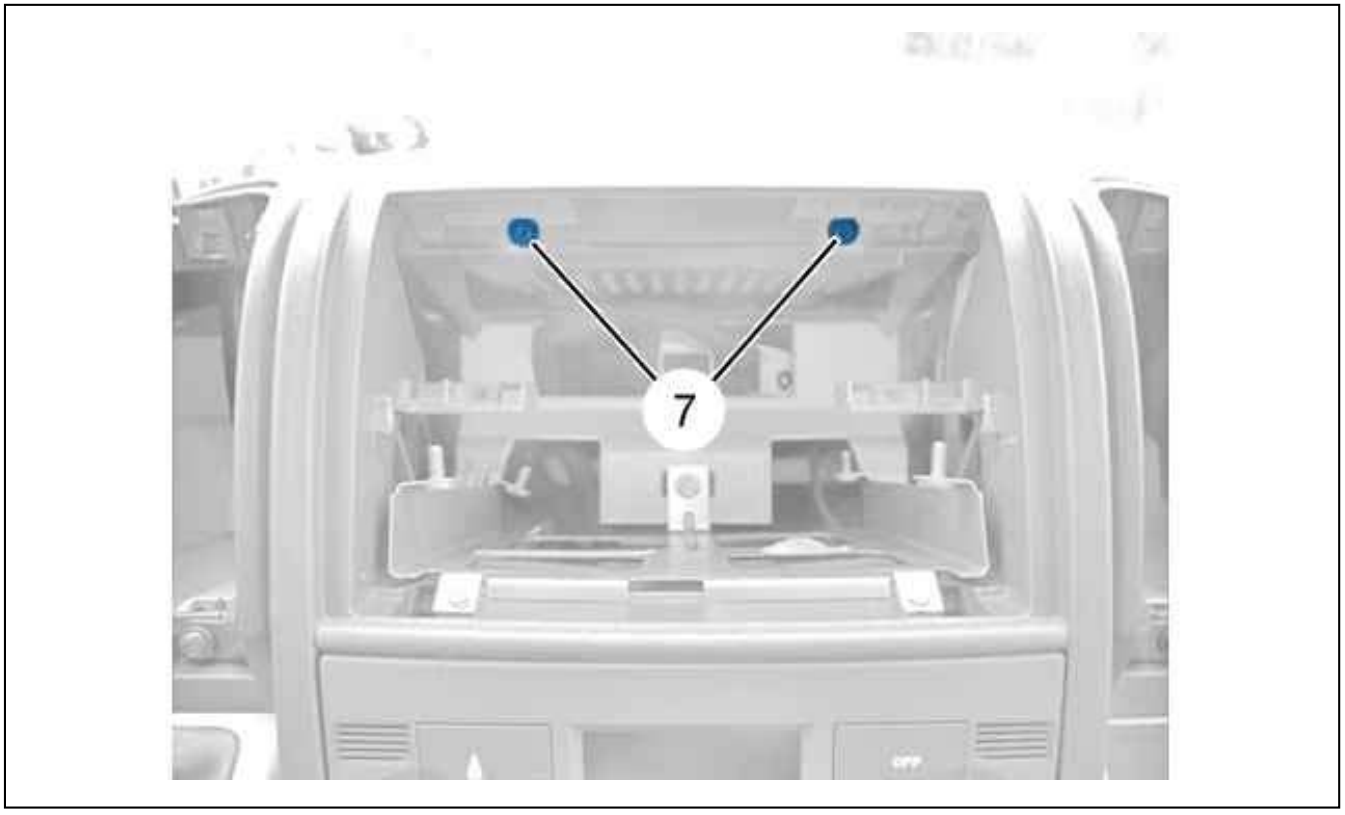

Figure : C5FG1GSD

Remove :

- The bolts (7)
- The movable shelf (6)

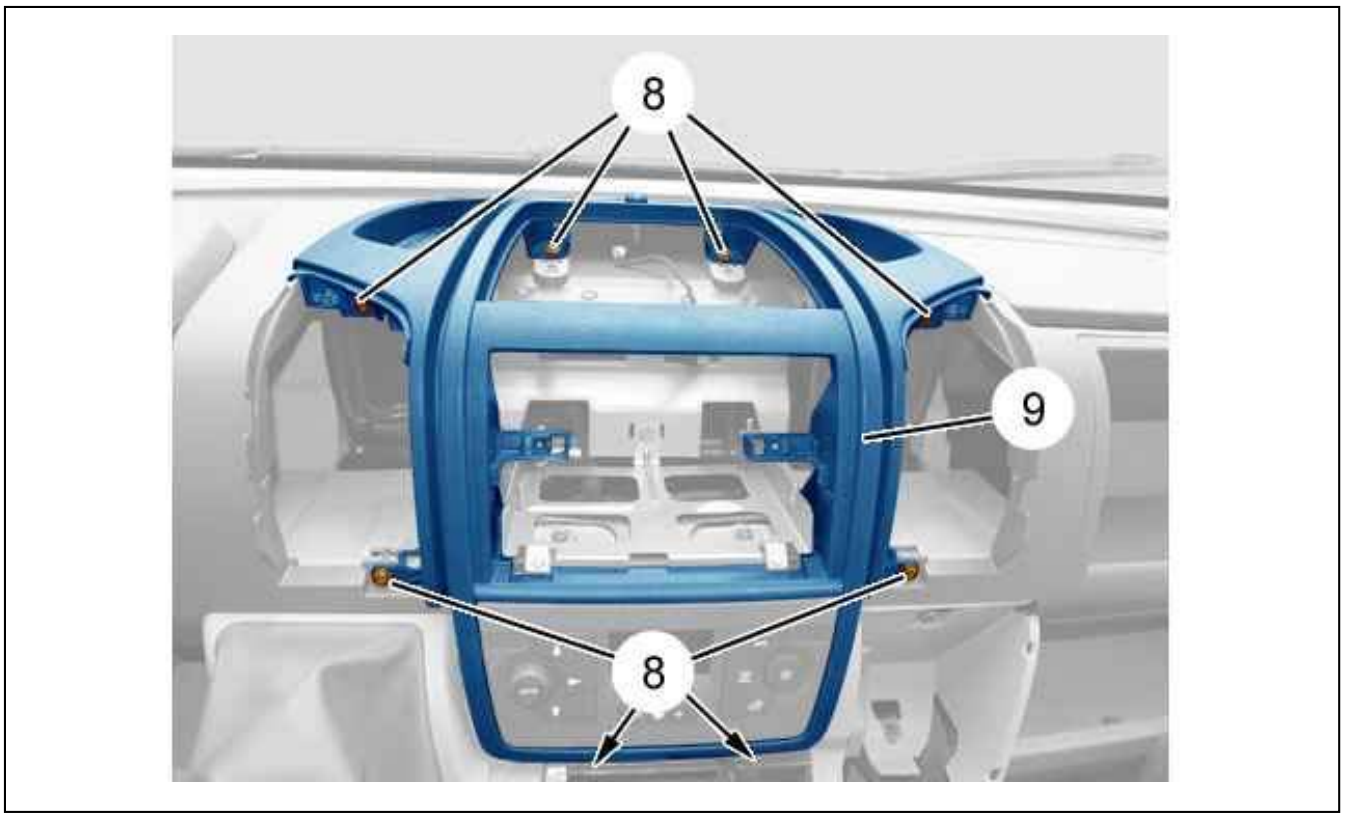

Figure : C5FG1GTD

Remove the bolts (8).
Unclip the trim (9) ; Using tool [1350-ZZ].

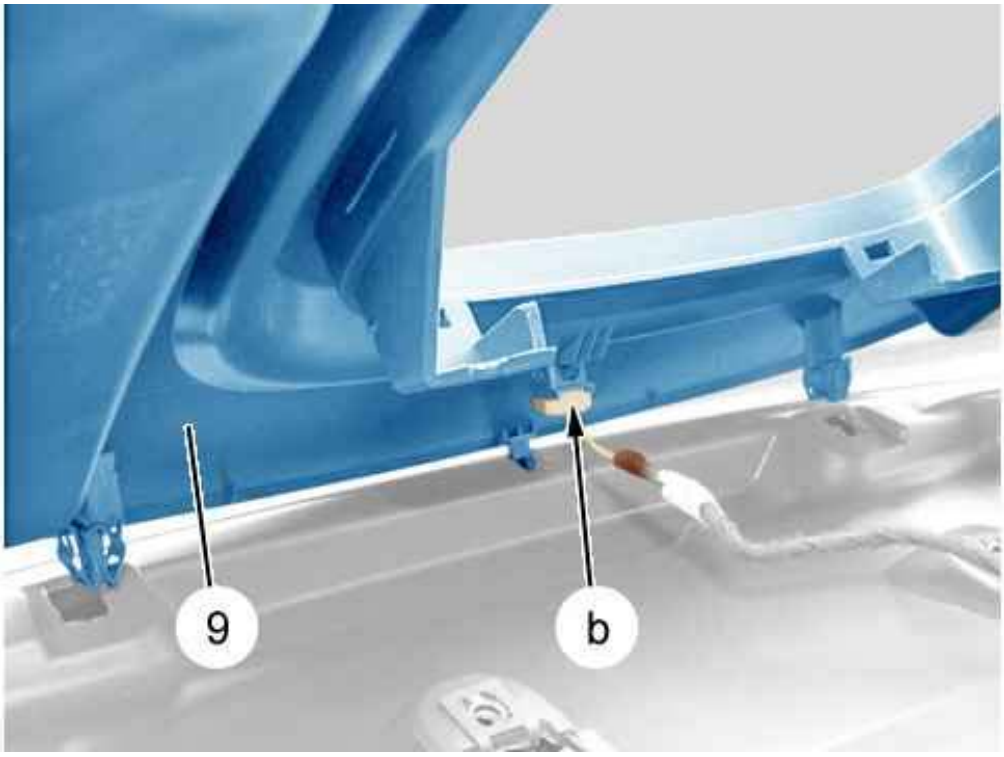

Figure : C5FG1GUD

Unclip the temperature sensor (at "b").
Remove the trim (9).

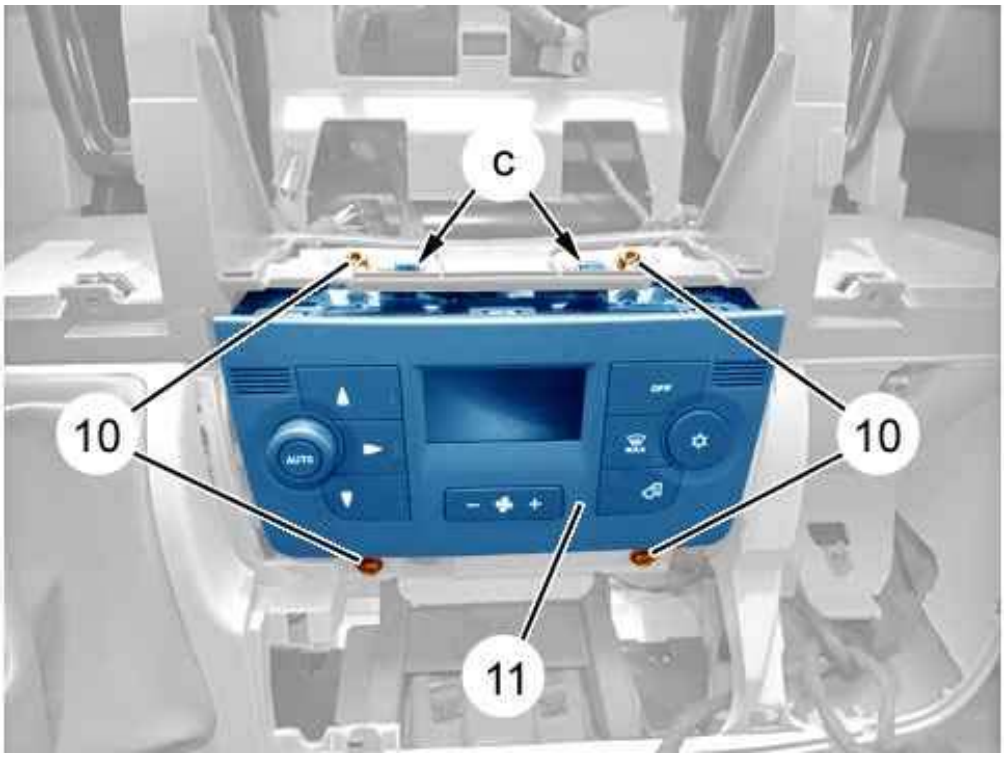

Figure : C5FG1GVD

Remove the bolts (10).

Unclip : The automatic air conditioning control panel (11) (at "c").
Detach : The automatic air conditioning control panel (11) (towards the interior of the dashboard).

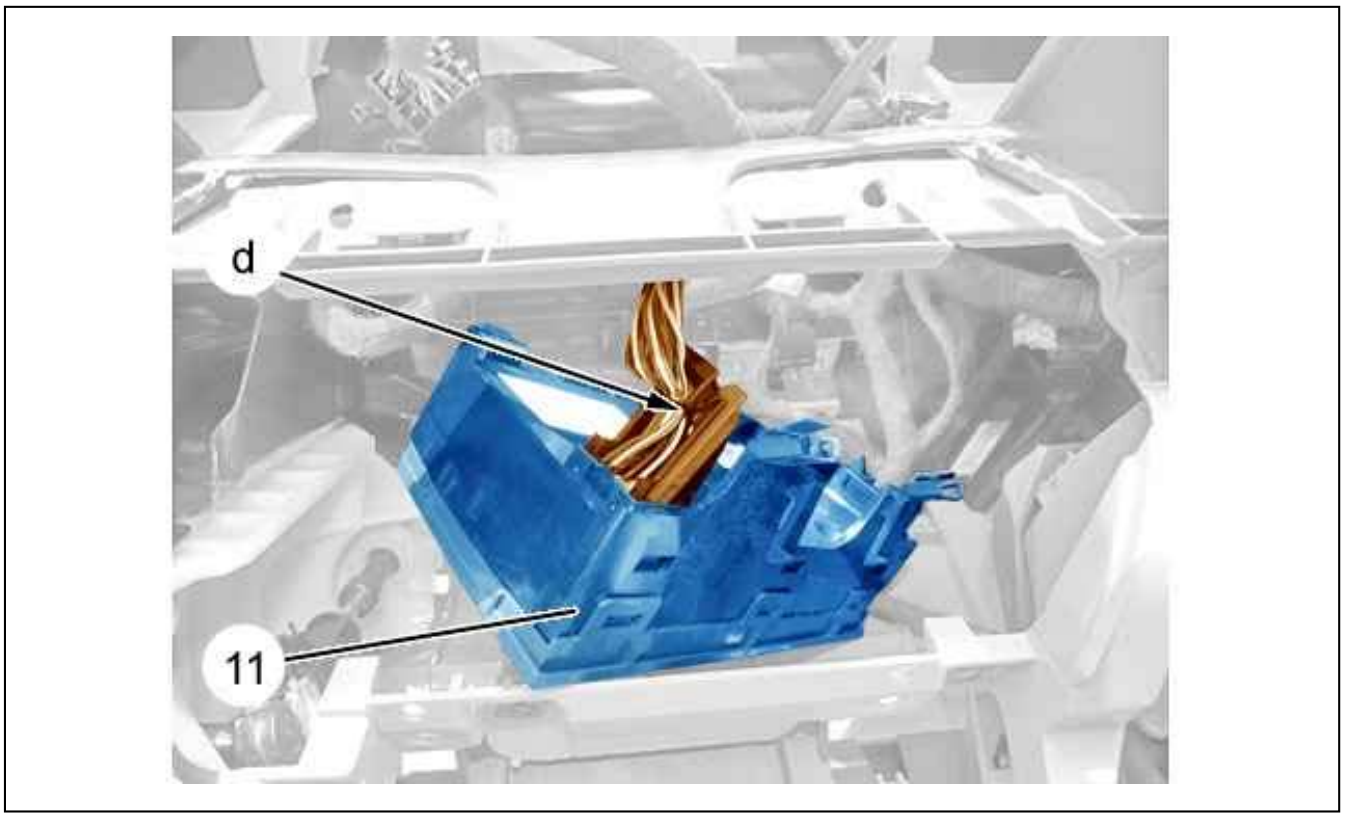

Figure : C5FG1GWD

Disconnect the connector (at "d").
Remove : The automatic air conditioning control panel (11).

3. Refitting

CAUTION : Check that all the various equipment operates, before refitting the manual air conditioning control pane (11).

Proceed in the reverse order to removal.
Reconnect the battery.
Check the operation of the equipment.

STRIPPING-ASSEMBLING : DASHBOARD

1. Recommended tools

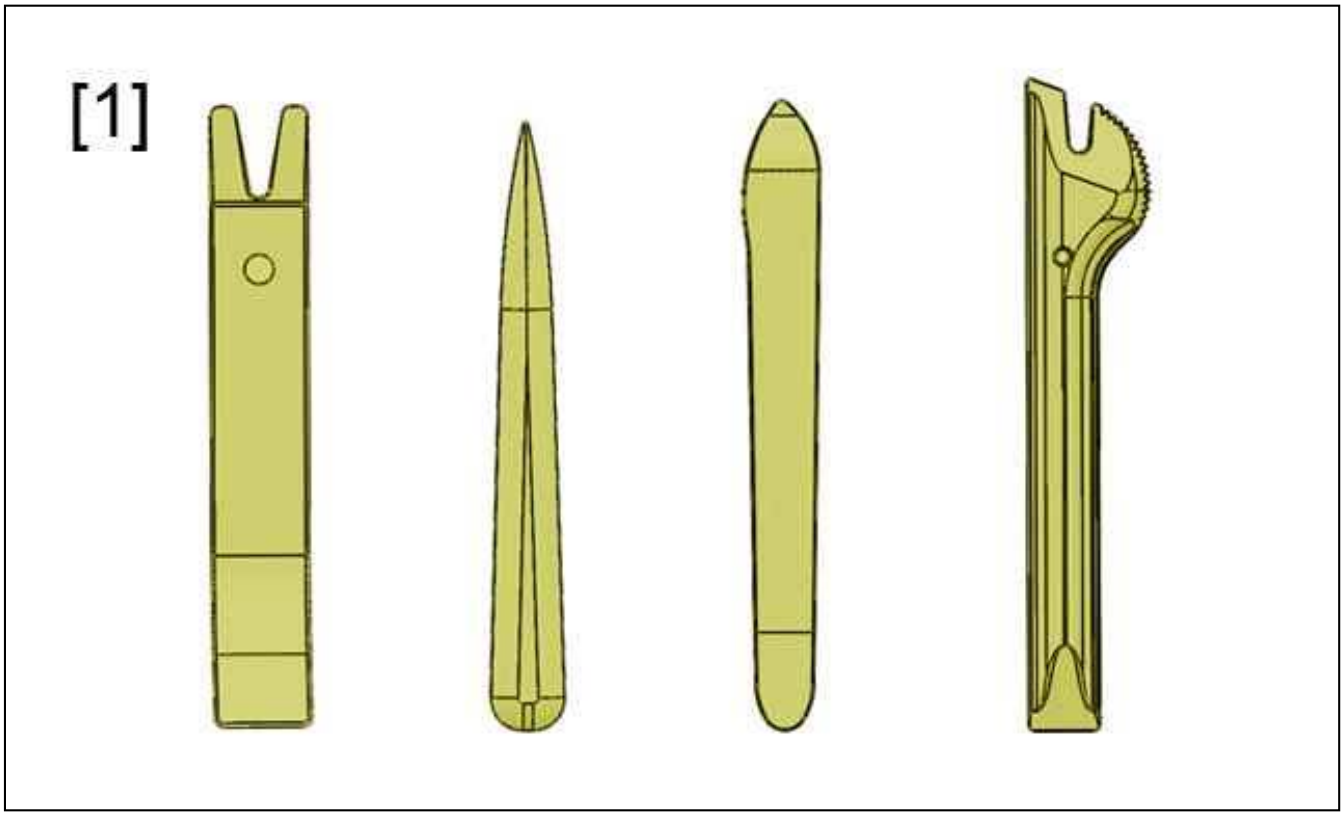

Figure : E5AP30WD

[1] Stripping tool (-).1350-ZZ.

2. Stripping

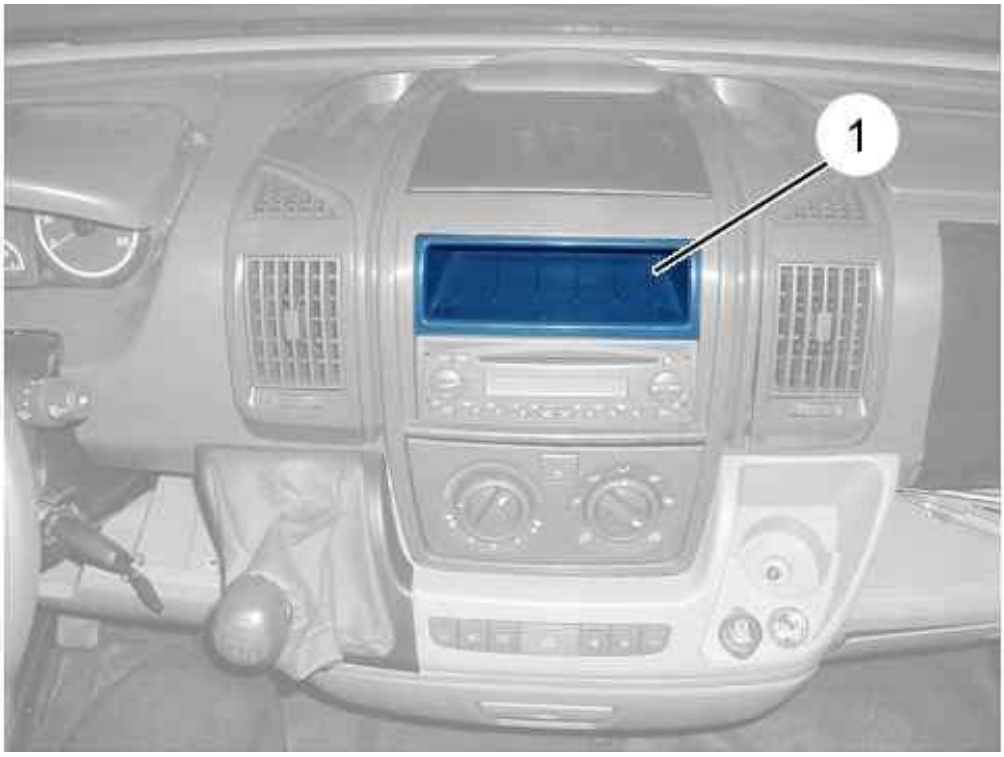

Figure : C5FP0Z7D

Unclip the upper storage compartment (1) ; Using tool [1].
Remove the upper storage compartment (1).



Figure : C5FP0Z8D

Remove the bolts (2).

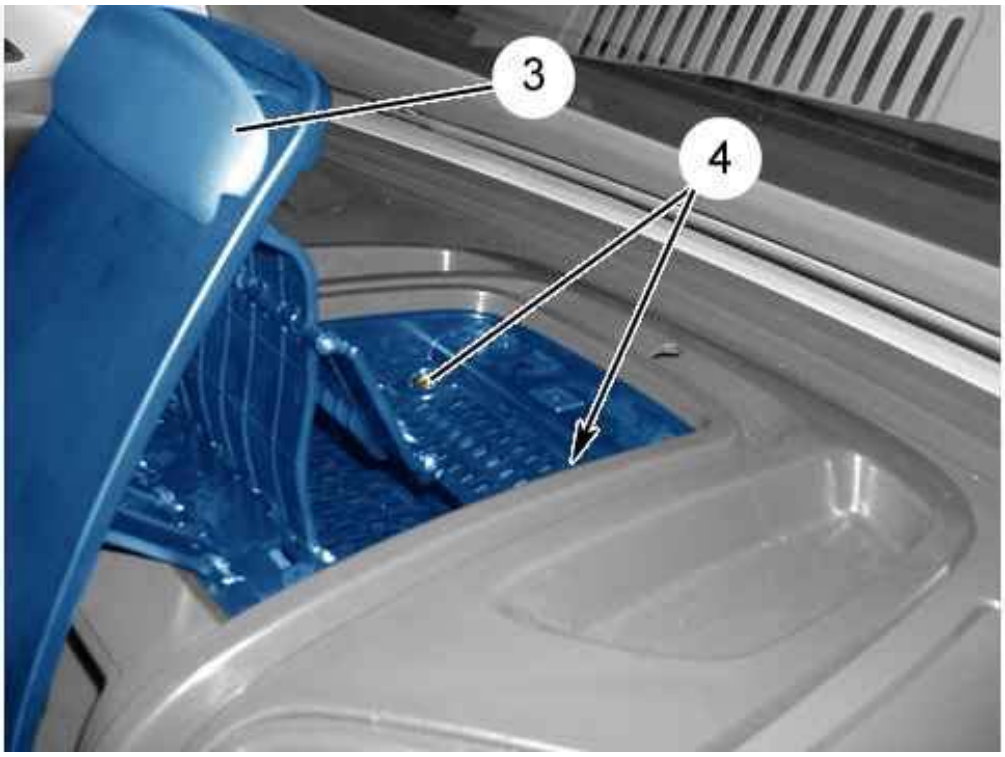

Figure : C5FP0Z9D

Remove :

- The bolts (4)
- The movable shelf (3)



Figure : C5FP0ZAD

Remove bolts (5).
Unclip the lower fascia central trim (6) ; Using tool [1].
Detach the lower fascia central trim (6) (partly).

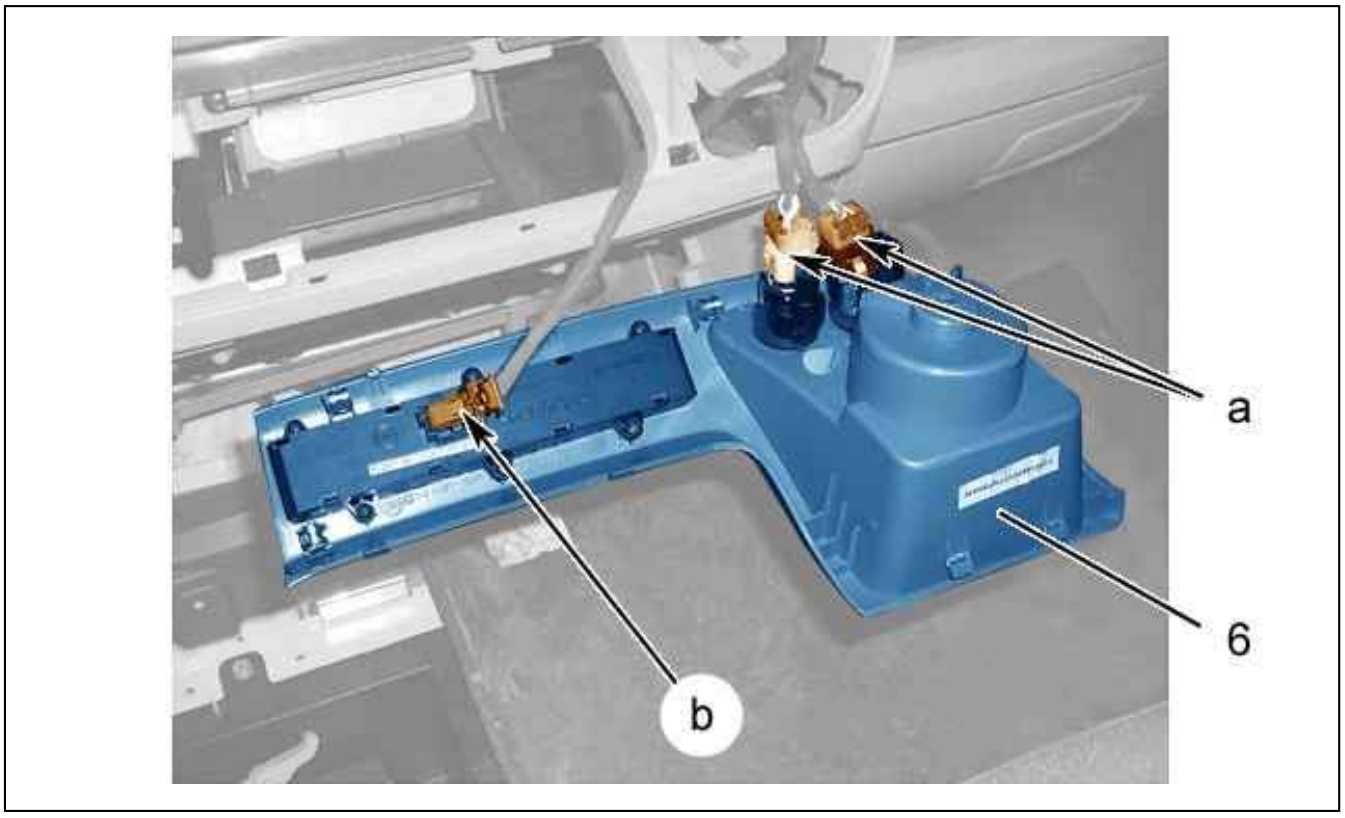

Figure : C5FP0ZBD

Disconnect the connectors "a", "b".
Remove :

- The lower fascia central trim (6)
- The audio system (see the relevant operation)

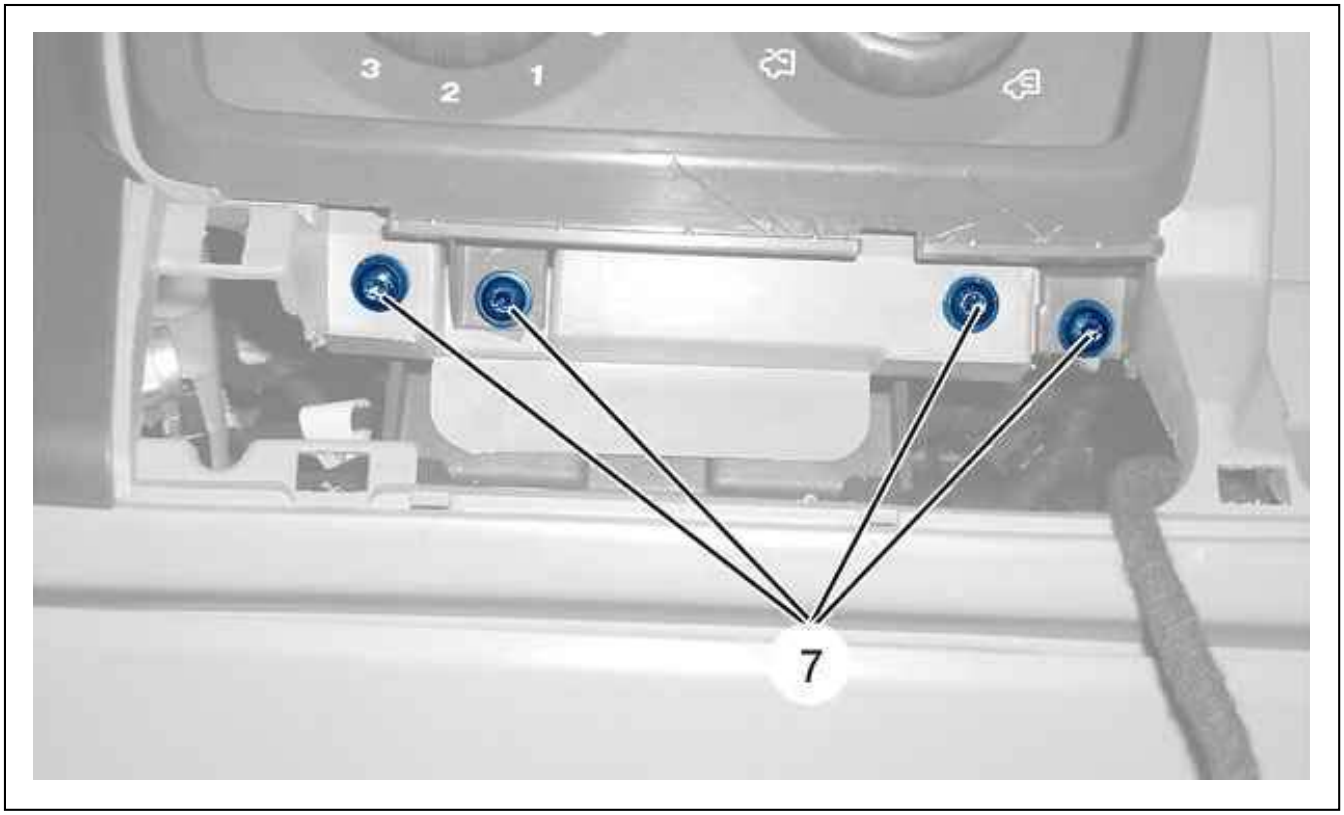

Figure : C5FP0ZCD

Remove the bolts (7).

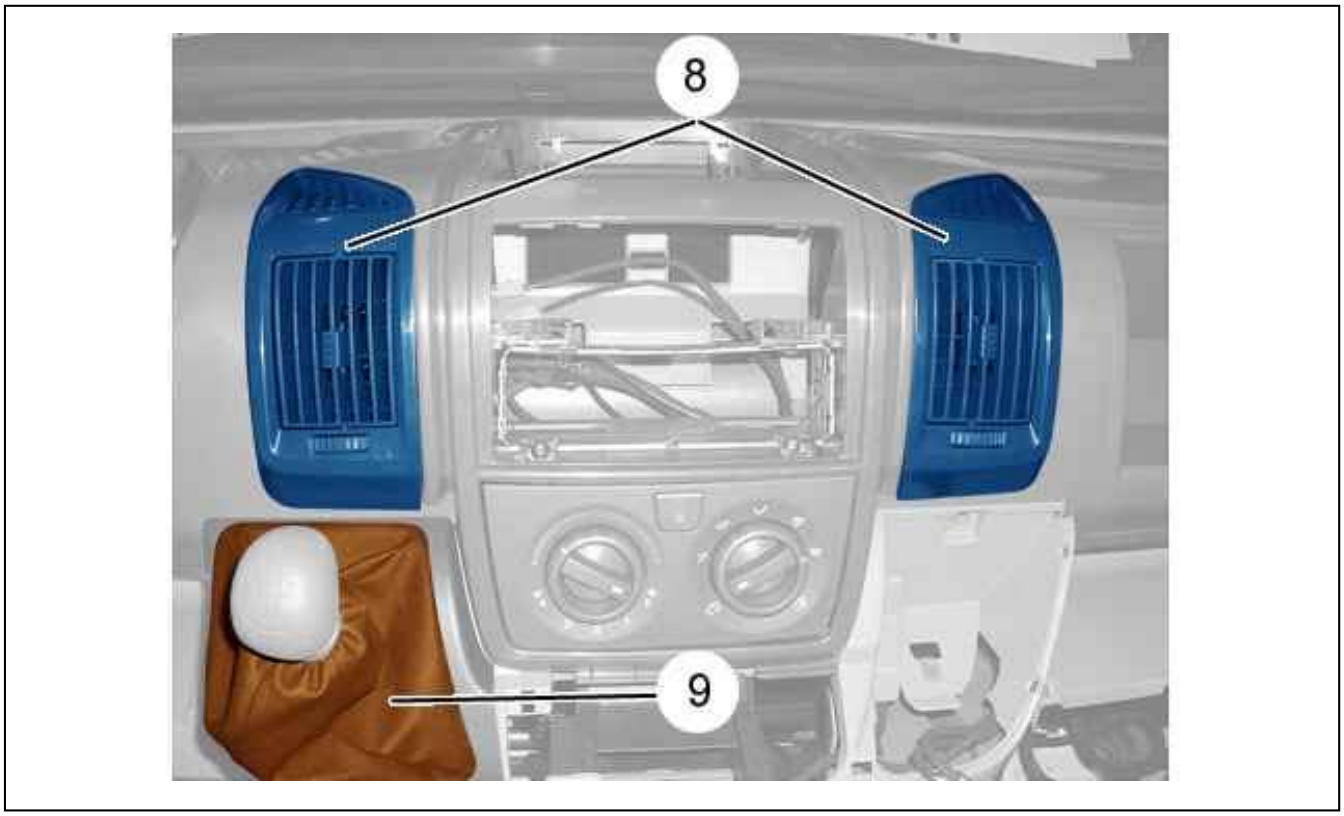

Figure : C5FP0ZDD

Unclip the central ventilation grilles (8) ; Using tool [1].
Remove the central ventilation grilles (8).

Unclip the gear lever gaiter (9) ; Using tool [1].
Remove the gear lever gaiter (9).

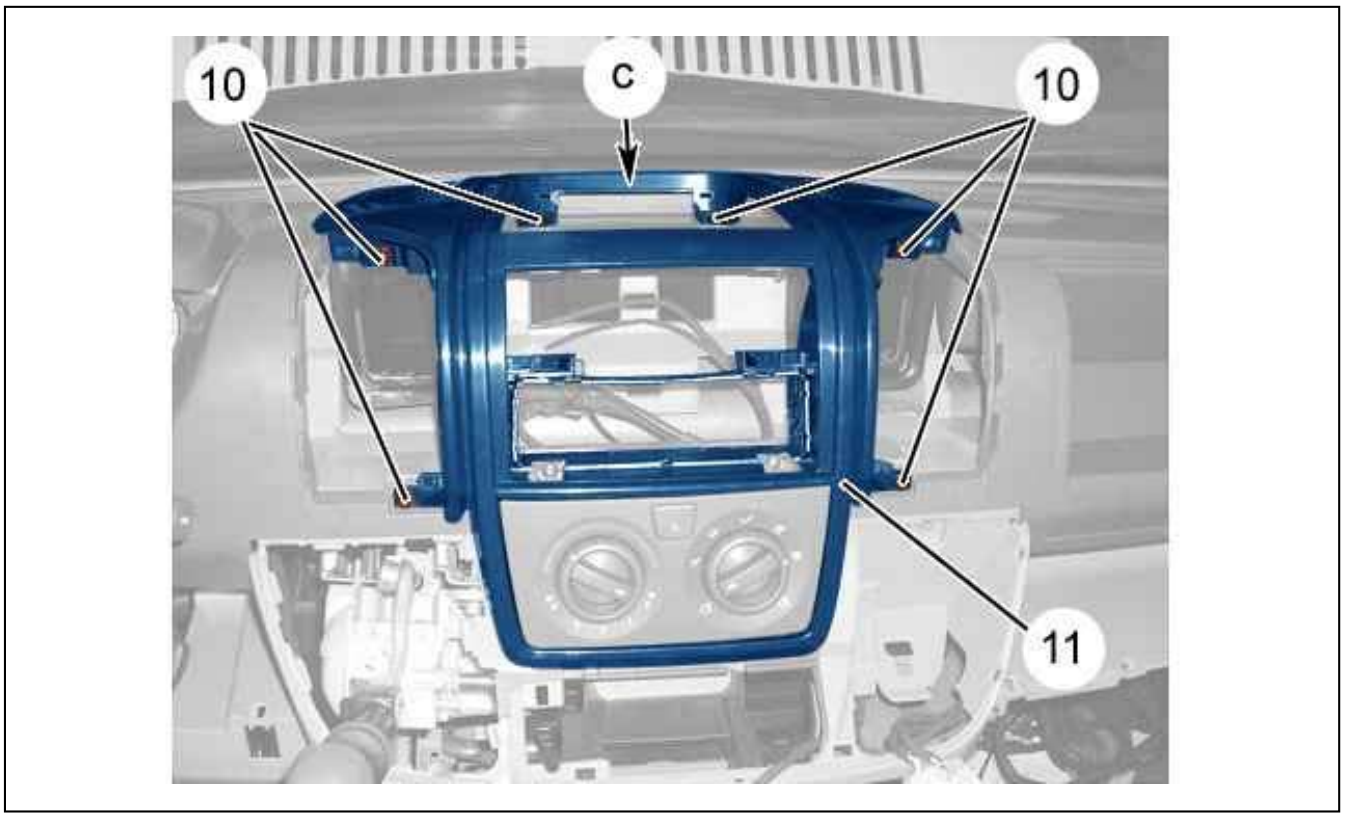

Figure : C5FP0ZED

Remove the bolts (10).
Unclip the fascia central trim (11) (at "c").
Remove the fascia central trim (11).

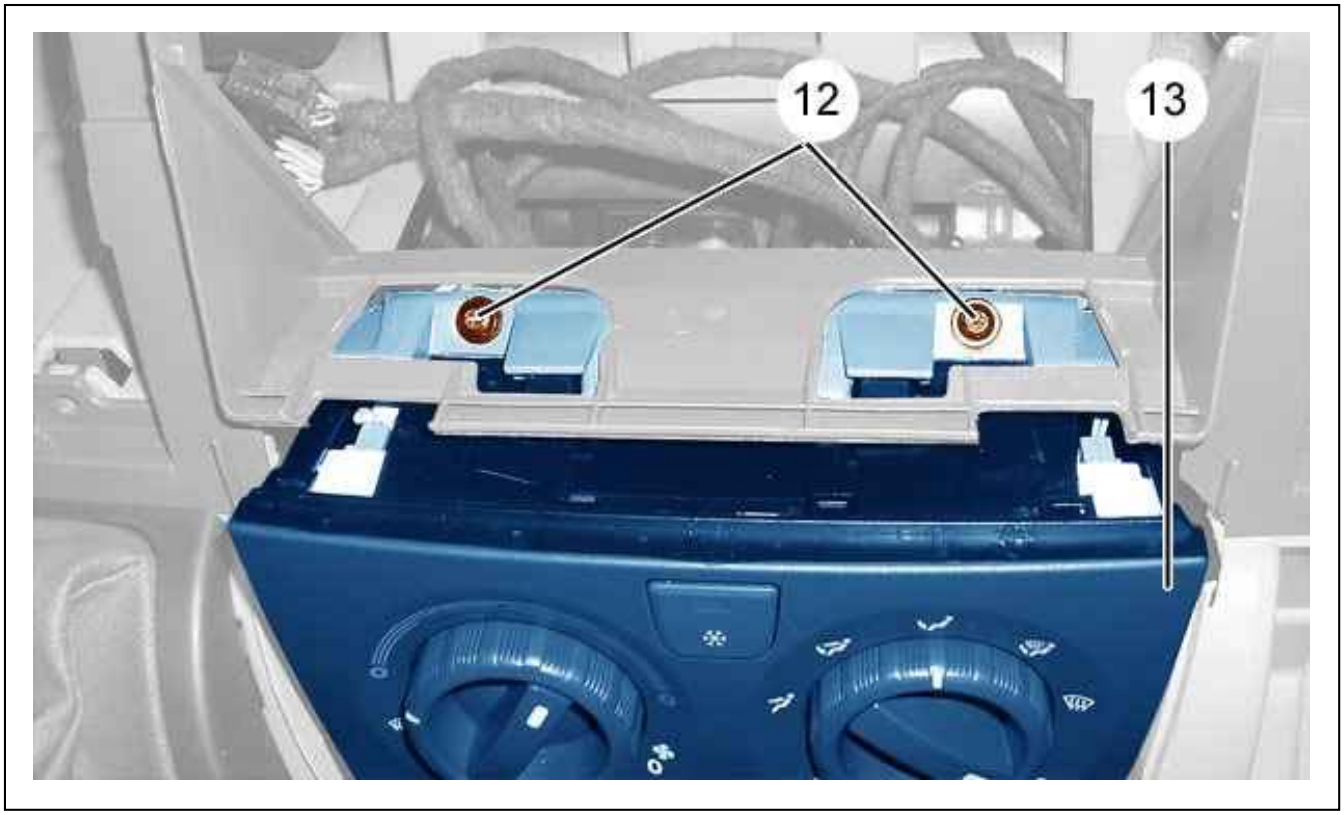

Figure : C5FP0ZFD

Remove the air conditioning control panel (13) bolts (12).
Push the air conditioning control panel (13) inside the fascia.

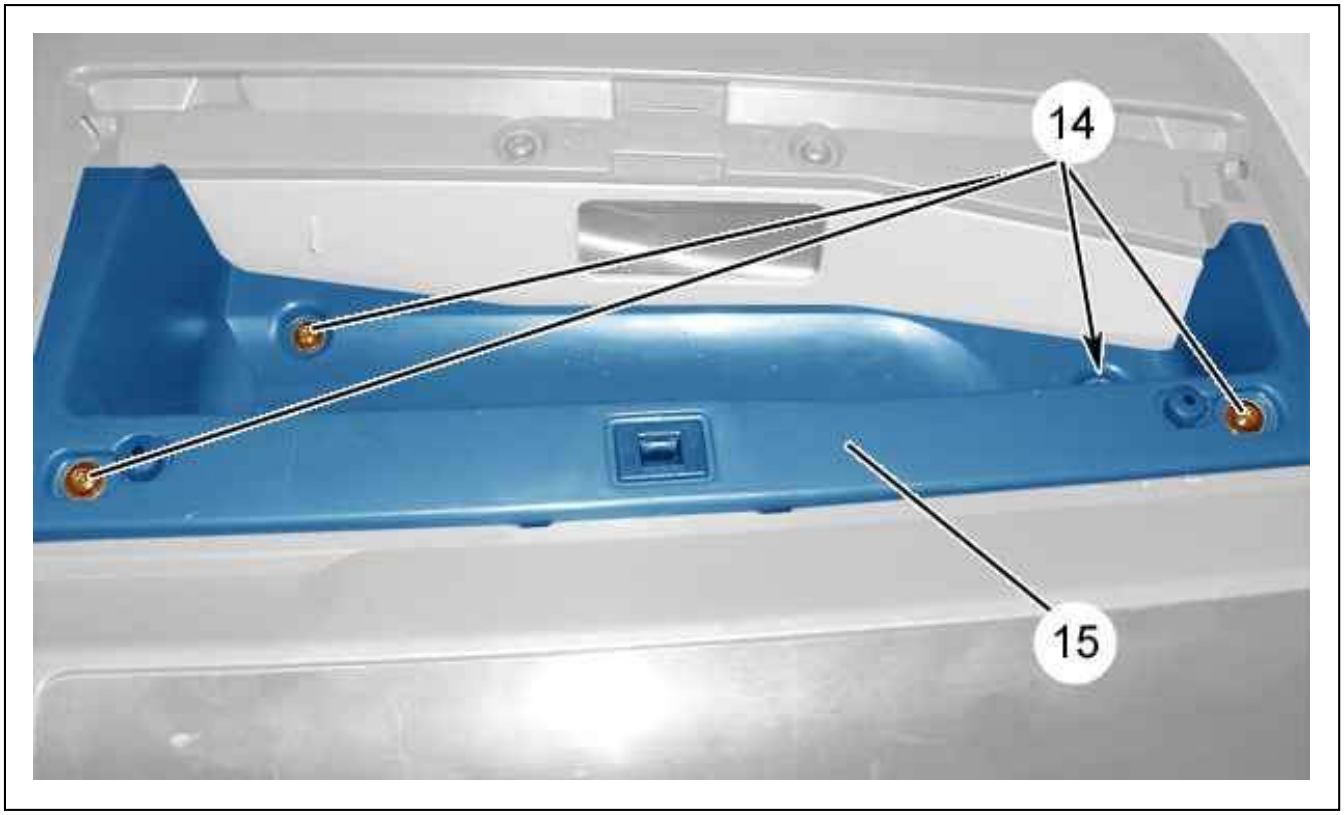

Figure : C5FP0ZGD

Remove :

- The right-hand upper glove box (15) bolts (14)
- The right-hand upper glove box (15)
- The passenger air bag (see the relevant operation)

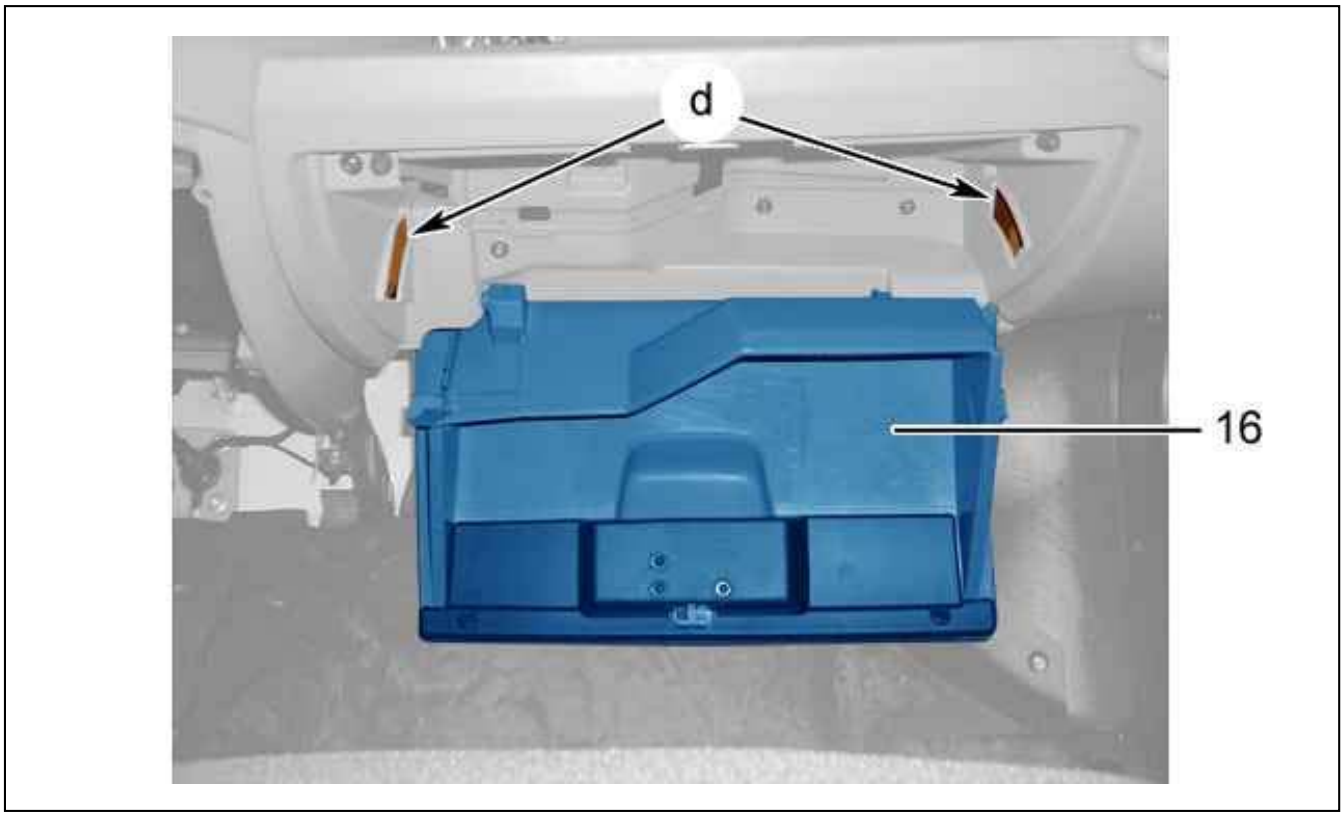

Figure : C5FP0ZHD

Unclip the right-hand lower glove box (16) at " d " ; Using tool [1].



Figure : C5FP0ZJD

Remove :

- The bolts (17), (18)
- The right-hand lower glove box (16)

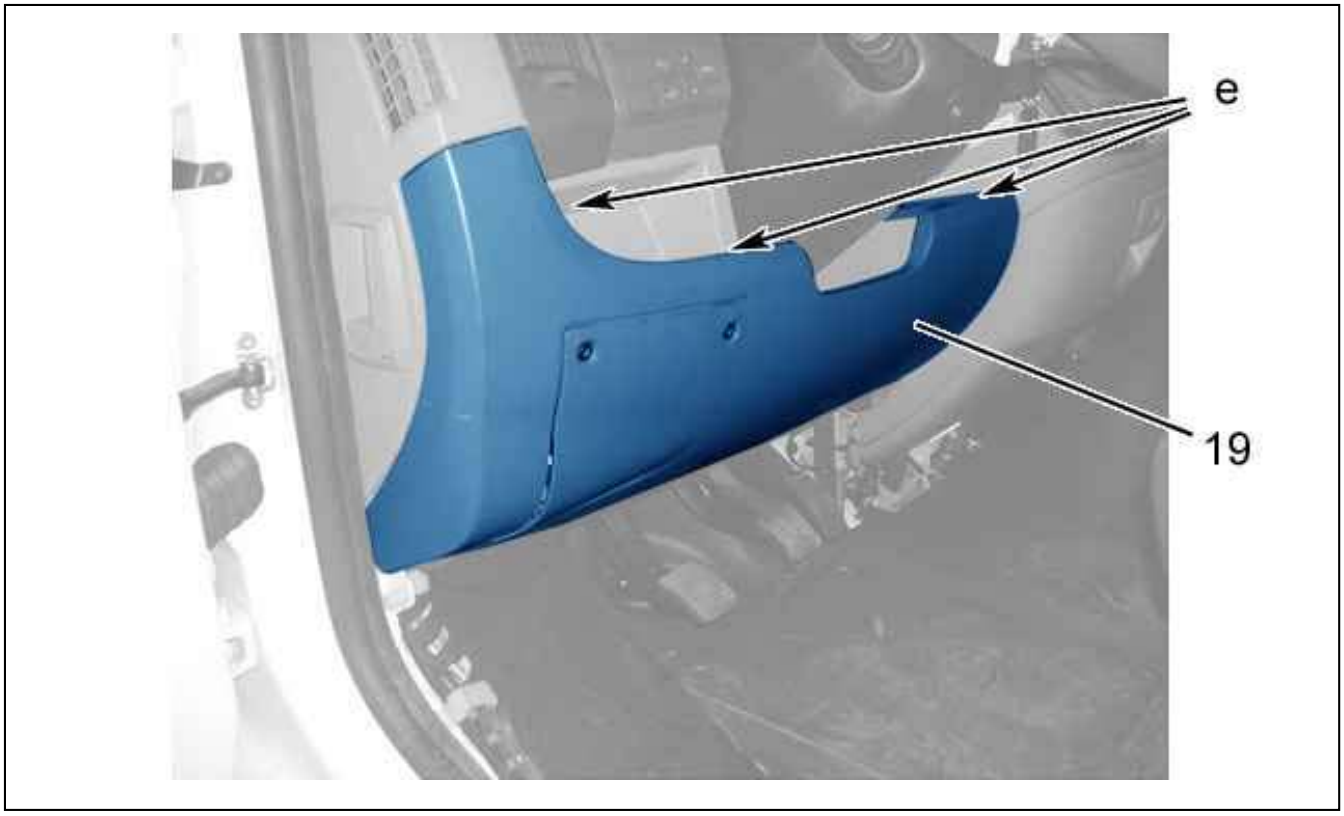

Figure : C5FP0ZKD

Remove :

- The left-hand lower trim bolts (19) (at "e")
- The left-hand lower trim (19)
- The bonnet opening control (see the relevant operation)

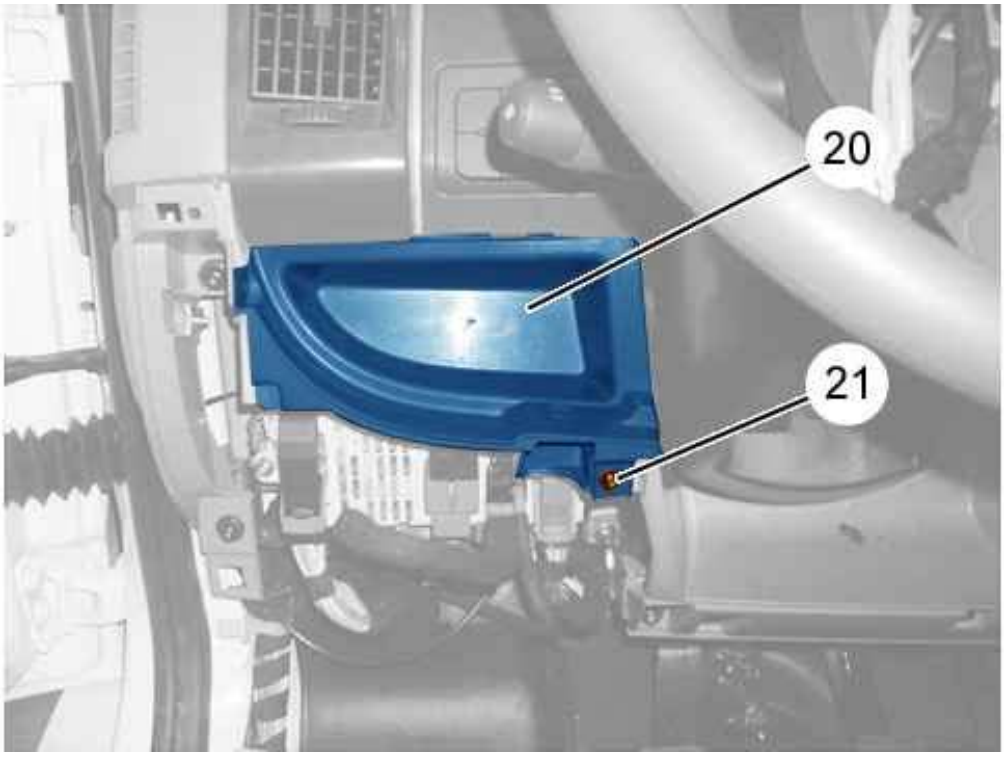

Figure : C5FP0ZLD

Remove :

- The (21) bolt
- The trim (20)



Figure : C5FP0ZMD

Remove the left-hand ventilation grille bolt (22) (at "f").
Unclip the left-hand ventilation grille (22) ; Using tool [1].



Figure : C5FP0ZND

Remove the right-hand ventilation grille bolt (23) (at "g").
Unclip the right-hand ventilation grille (23) ; Using tool [1].

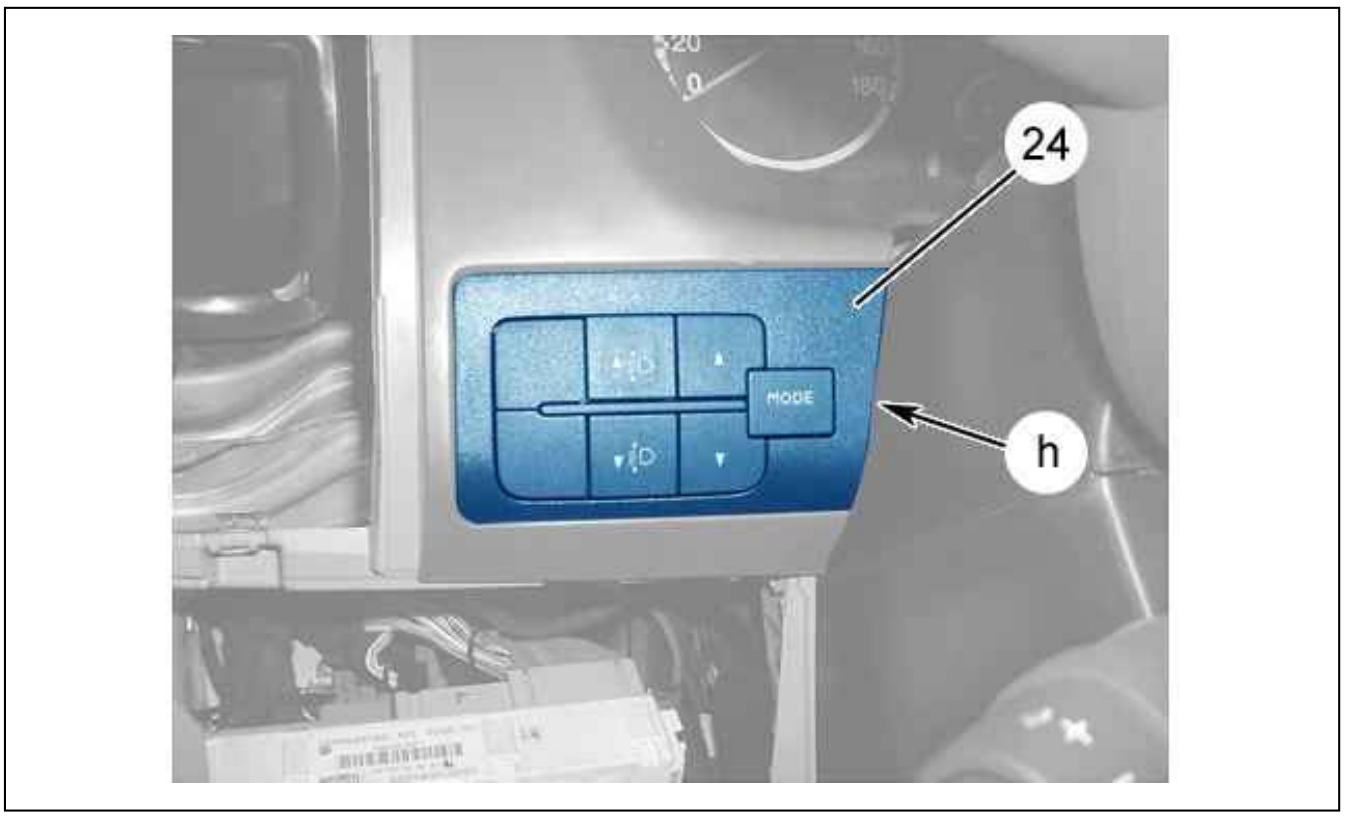

Figure : C5FP0ZPD

Unclip the headlamp adjustment control (24) at " h " ; Using tool [1].
Detach the headlamp adjustment control (24) (partly).

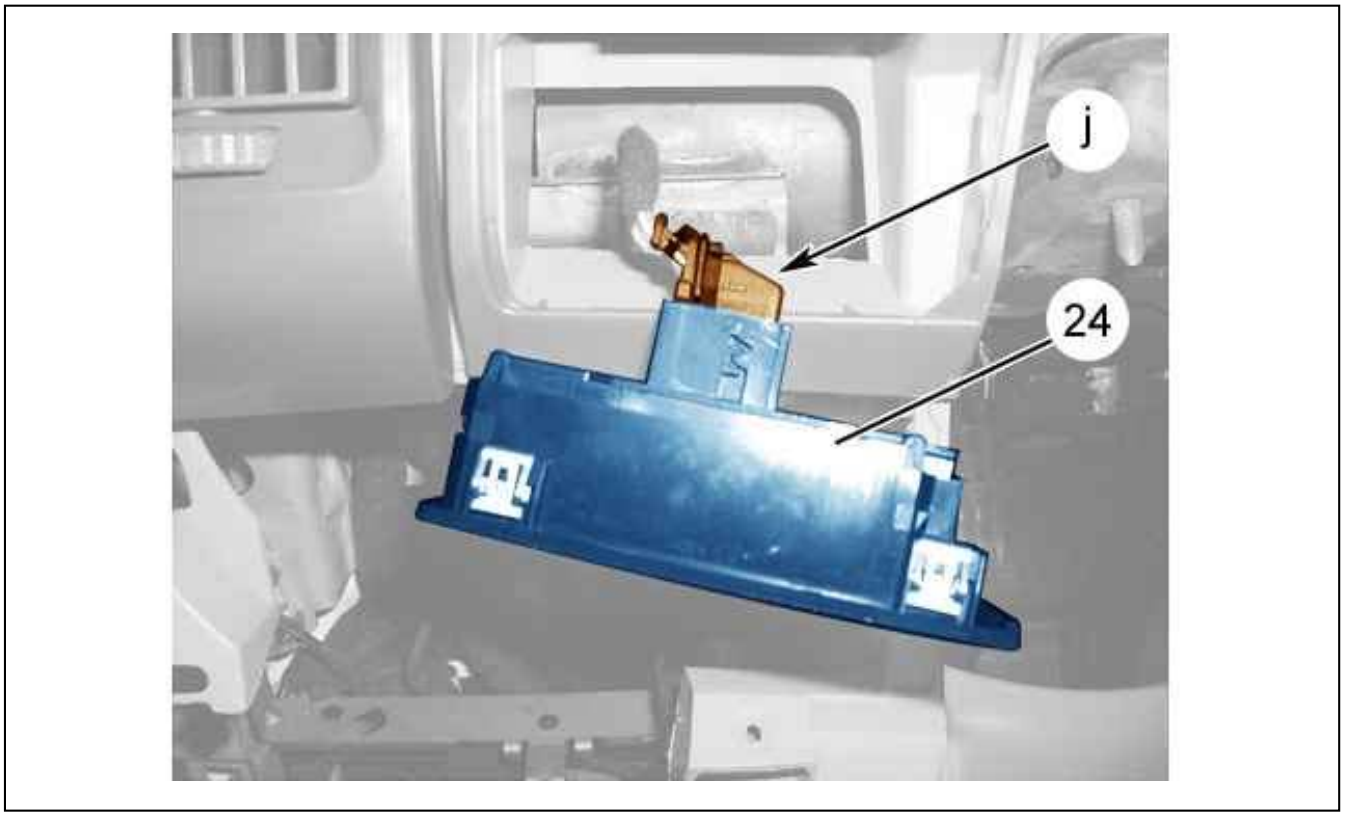

Figure : C5FP0ZQD

Disconnect the connector "j".
Remove the headlamp adjustment control (24).



Figure : C5FP0ZRD

Remove :

- The central glove box lower trim (26) bolts (25)
- The central glove box lower trim (26)



Figure : C5FP0ZSD

Remove the central glove box (28) bolts (27).
Detach the central glove box (29) (partly).

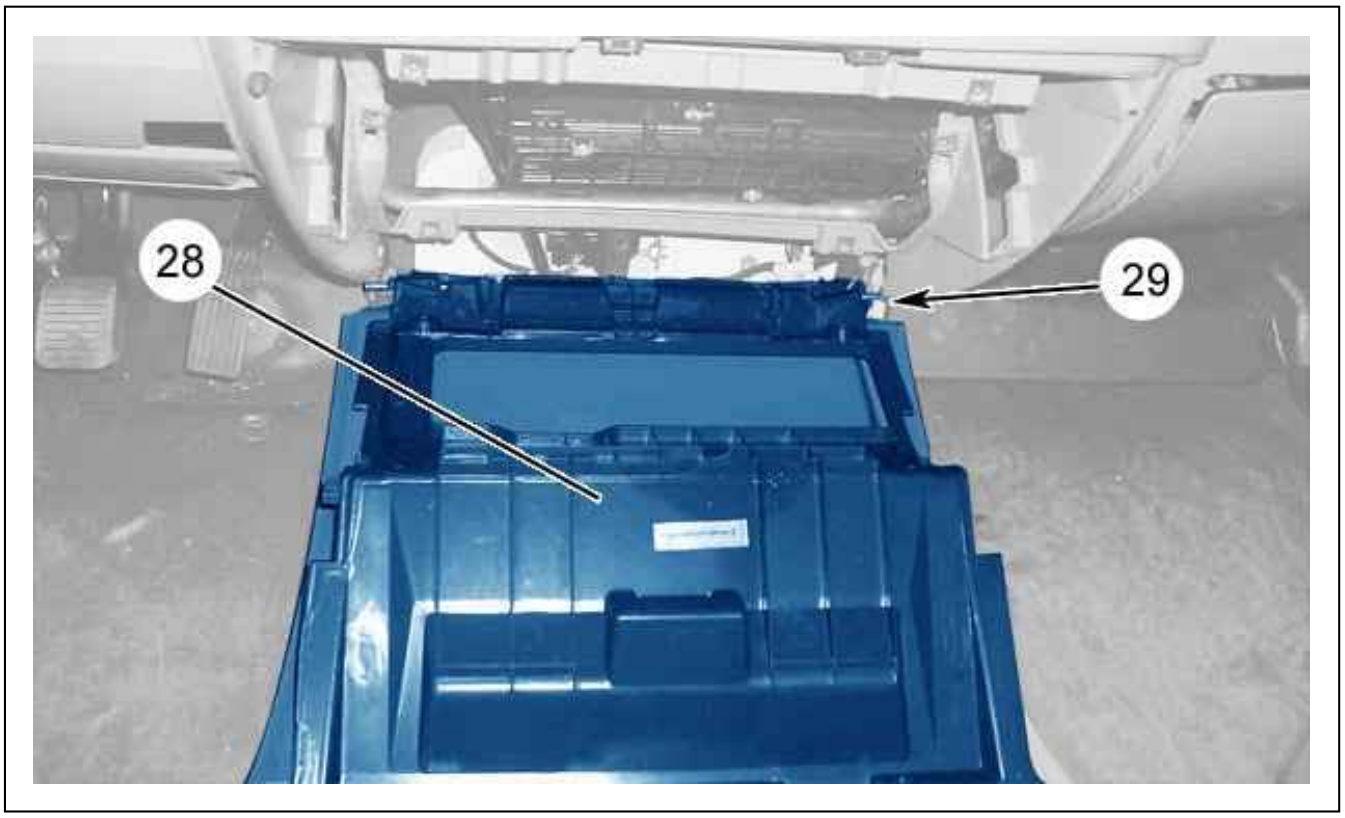

Figure : C5FP0ZTD

Remove :

- The central glove box (28) nut (29)
- The central glove box (28)
- The instrument panel (see the relevant operation)

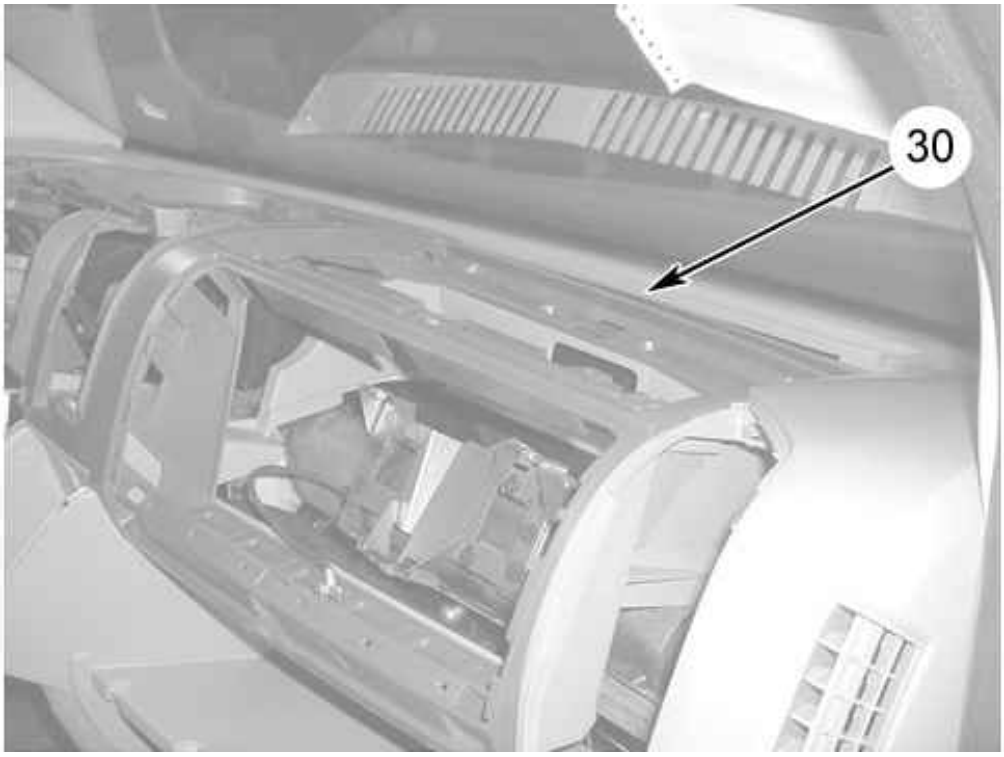

Figure : C5FP0ZUD

Unclip the fascia upper ventilation grille (30) ; Using tool [1].
Remove the fascia upper ventilation grille (30).

3. Re-assembling

Carry out the re-trim operations in the reverse order to the stripping operations.
Check all the equipment works.

STRIPPING - RE-ASSEMBLING : DASHBOARD (R.H.D.)

ESSENTIAL : Observe the safety and cleanliness recommendations .

1. Tooling

tool	Reference	Designation
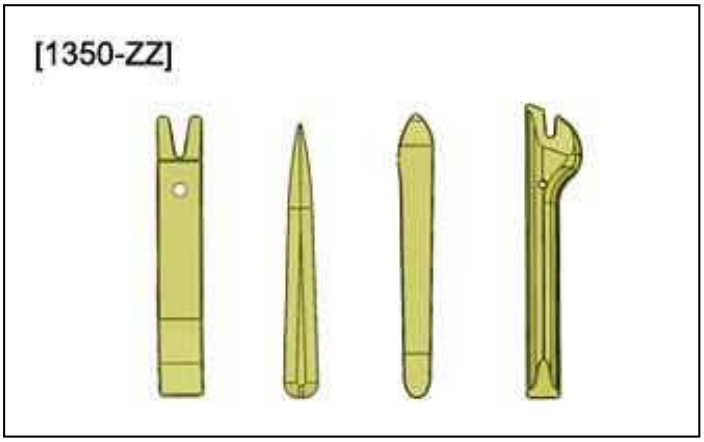 Figure : E5AG02MT	[1350-ZZ]	Stripping tool

2. Stripping

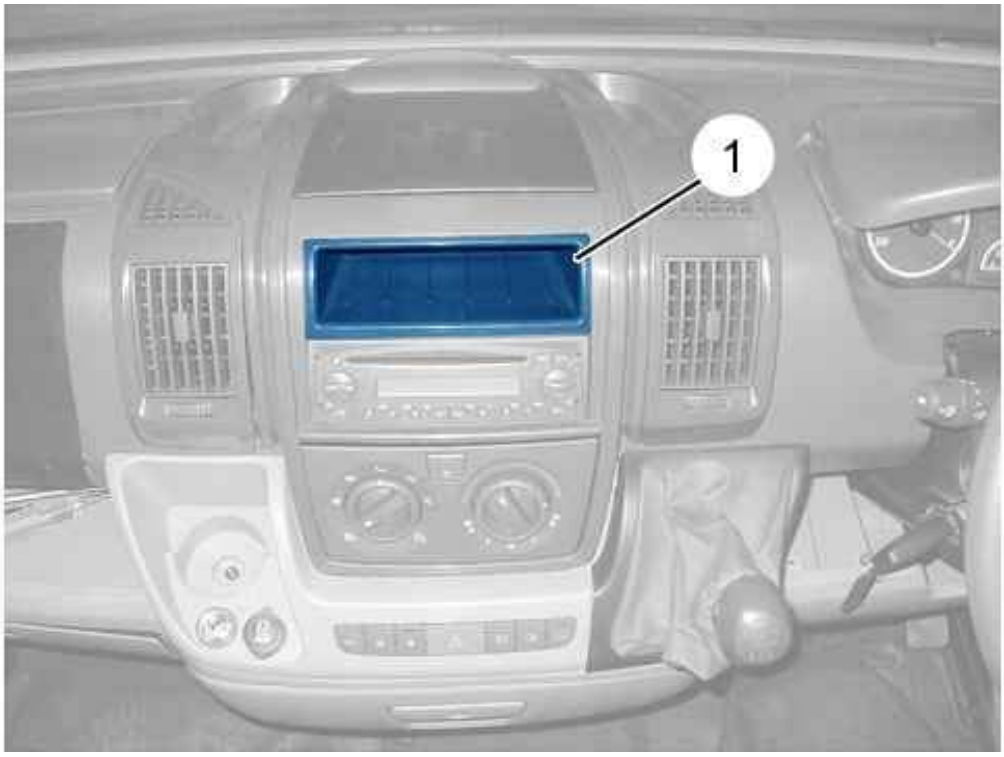

Figure : C5FS054D

Unclip the upper storage compartment (1) ; Using tool [1350-ZZ].
Remove the upper storage compartment (1).



Figure : C5FP0Z8D

Remove the bolts (2).

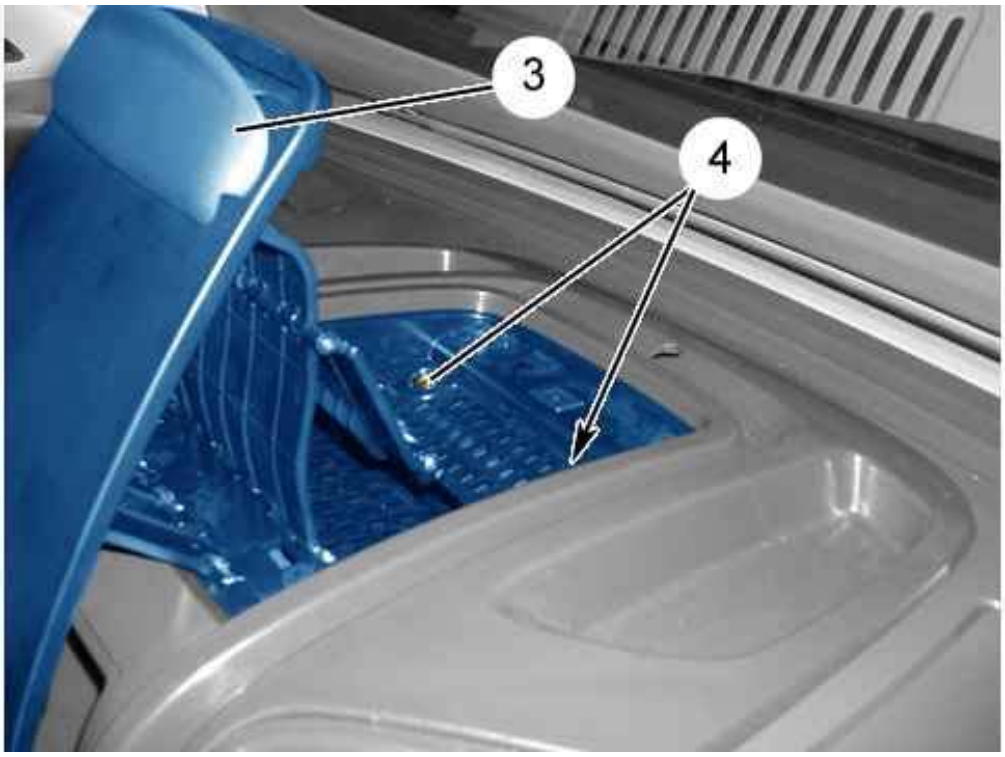

Figure : C5FP0Z9D

Remove :

- The bolts (4)
- The movable shelf (3)



Figure : C5FS055D

Remove the bolt (5).
Unclip the lower fascia central trim (6) ; Using tool [1350-ZZ].
Detach the lower fascia central trim (6) (partly).

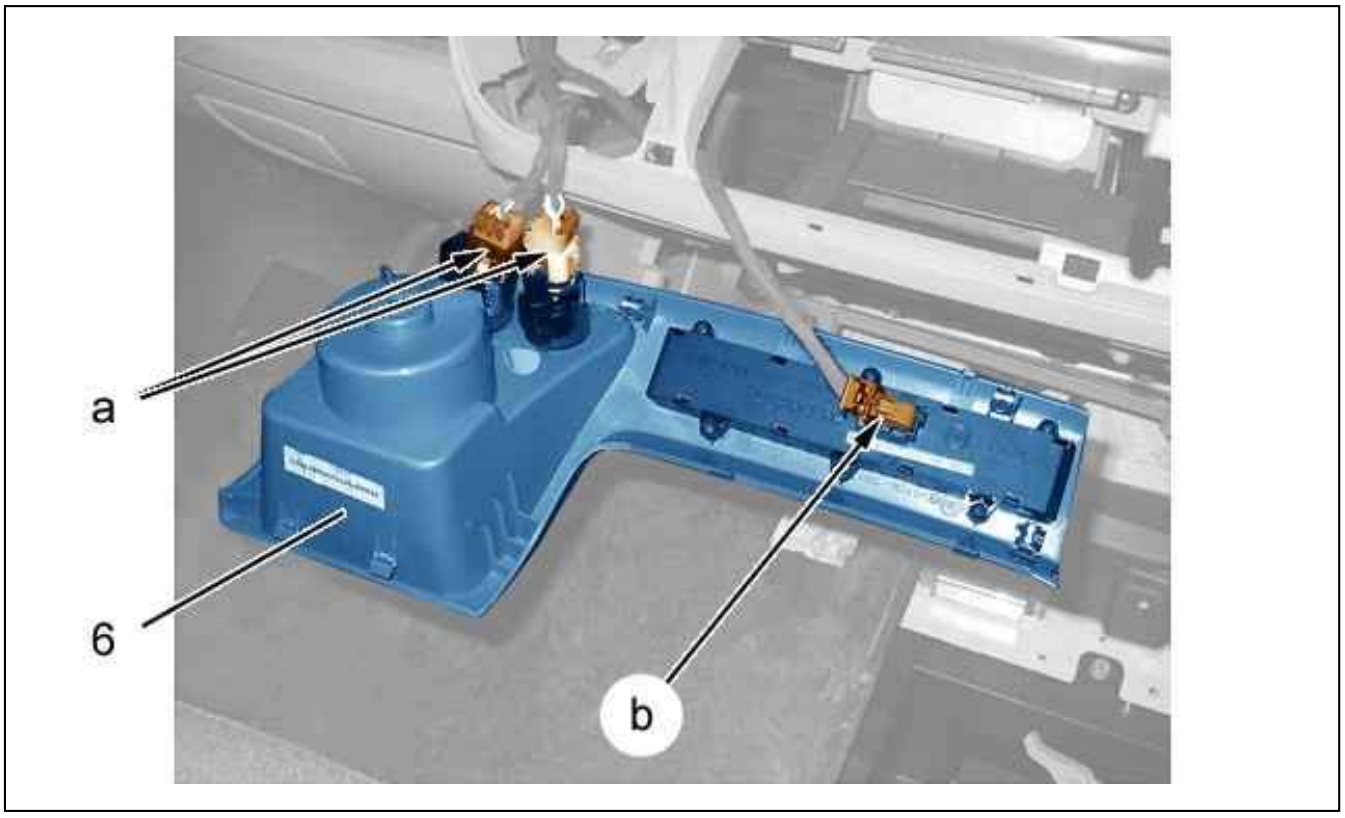

Figure : C5FS056D

Disconnect the connectors (at "a", "b").
Remove :

- The lower fascia central trim (6)
- The audio system

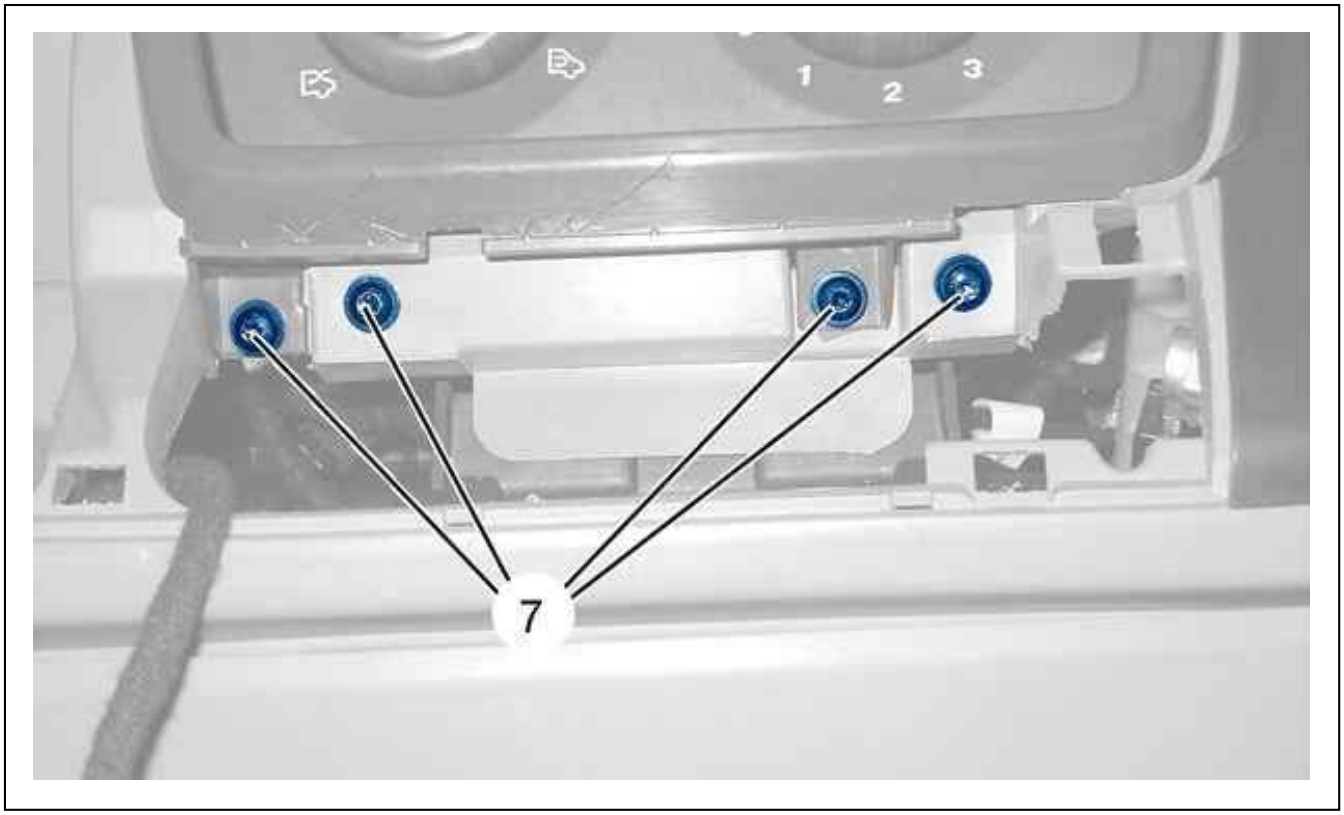

Figure : C5FS057D

Remove the bolts (7).

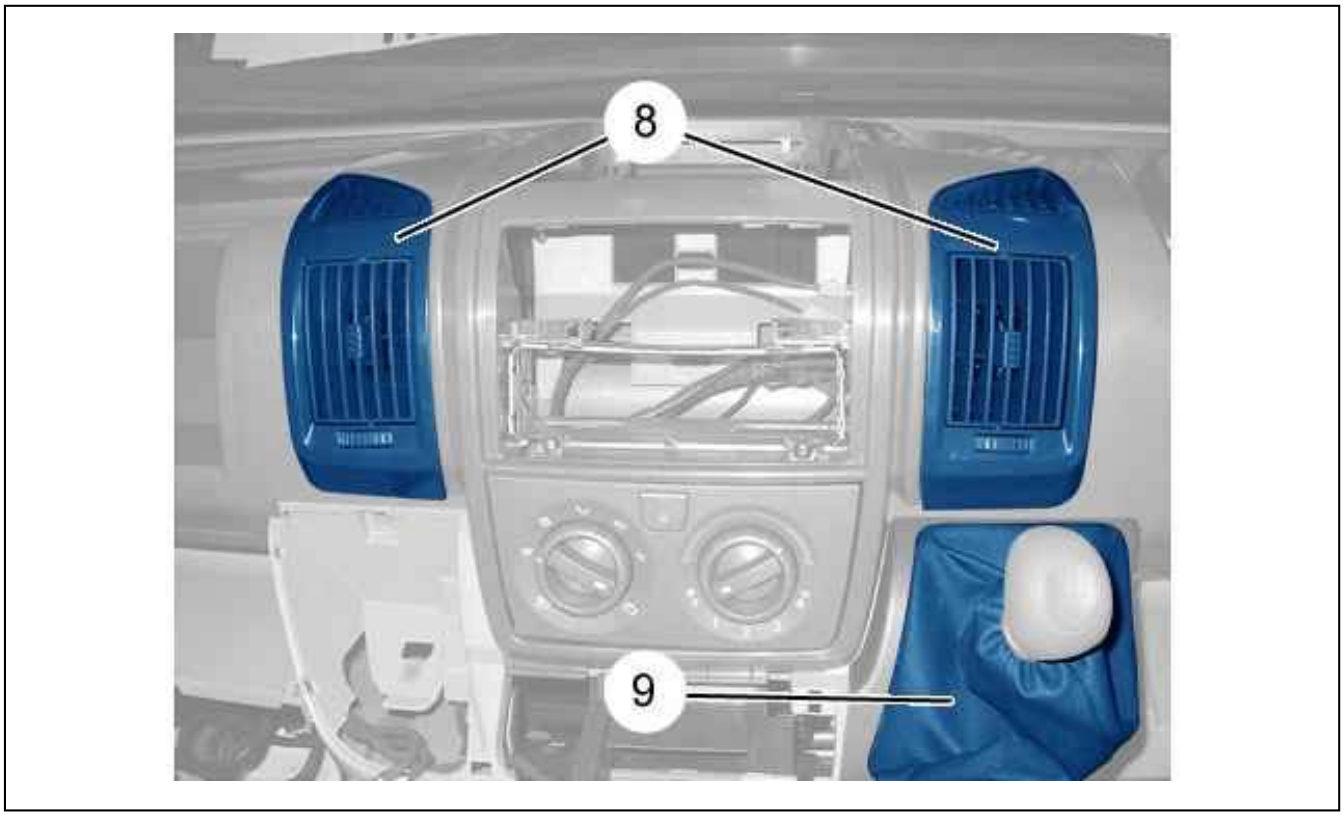

Figure : C5FS058D

Unclip the central ventilation grilles (8) ; Using tool [1350-ZZ].
Remove the central ventilation grilles (8).

Unclip the gear lever gaiter (9) ; Using tool [1350-ZZ].
Remove the gear lever gaiter (9).

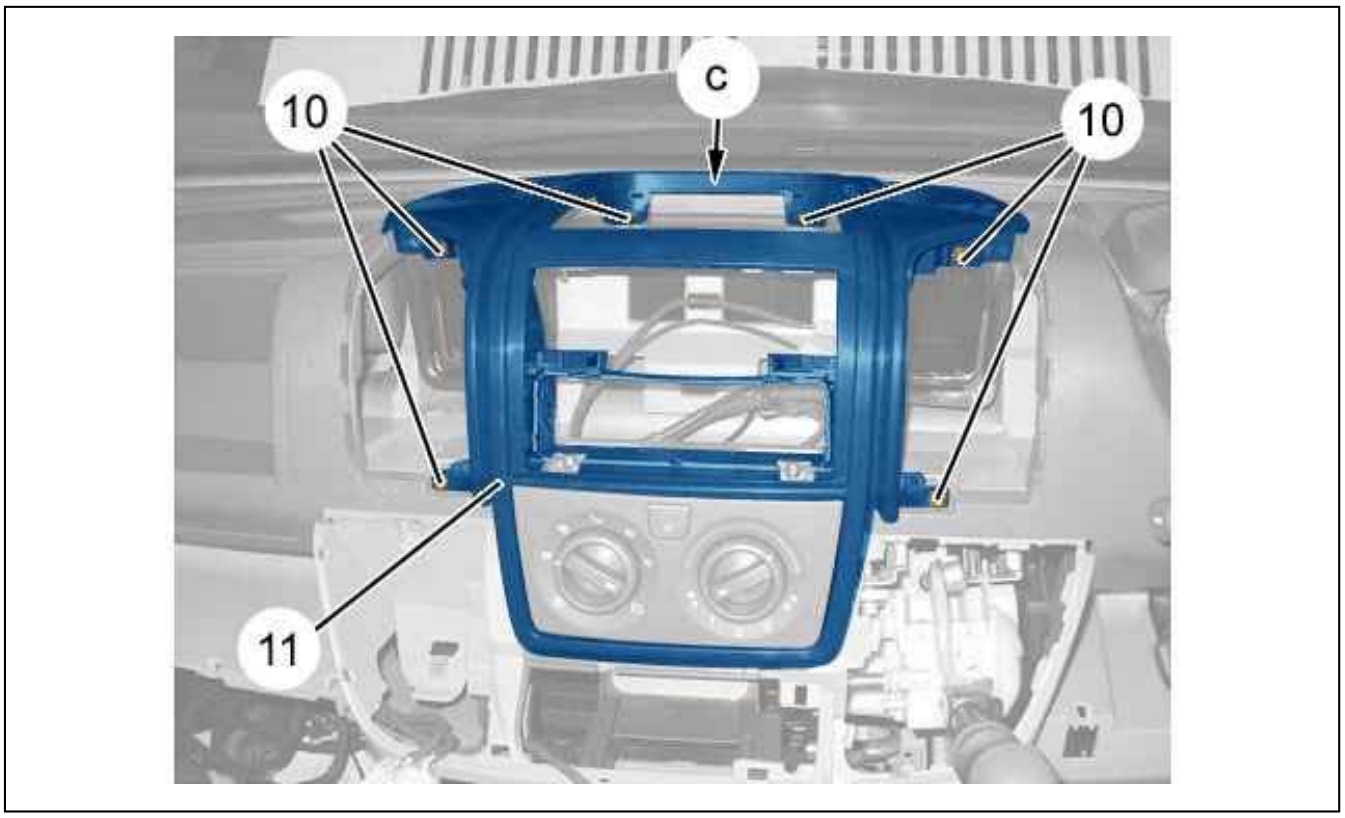

Figure : C5FS059D

Remove the bolts (10).
Unclip the fascia central trim (11) (at "c").
Remove the fascia central trim (11).

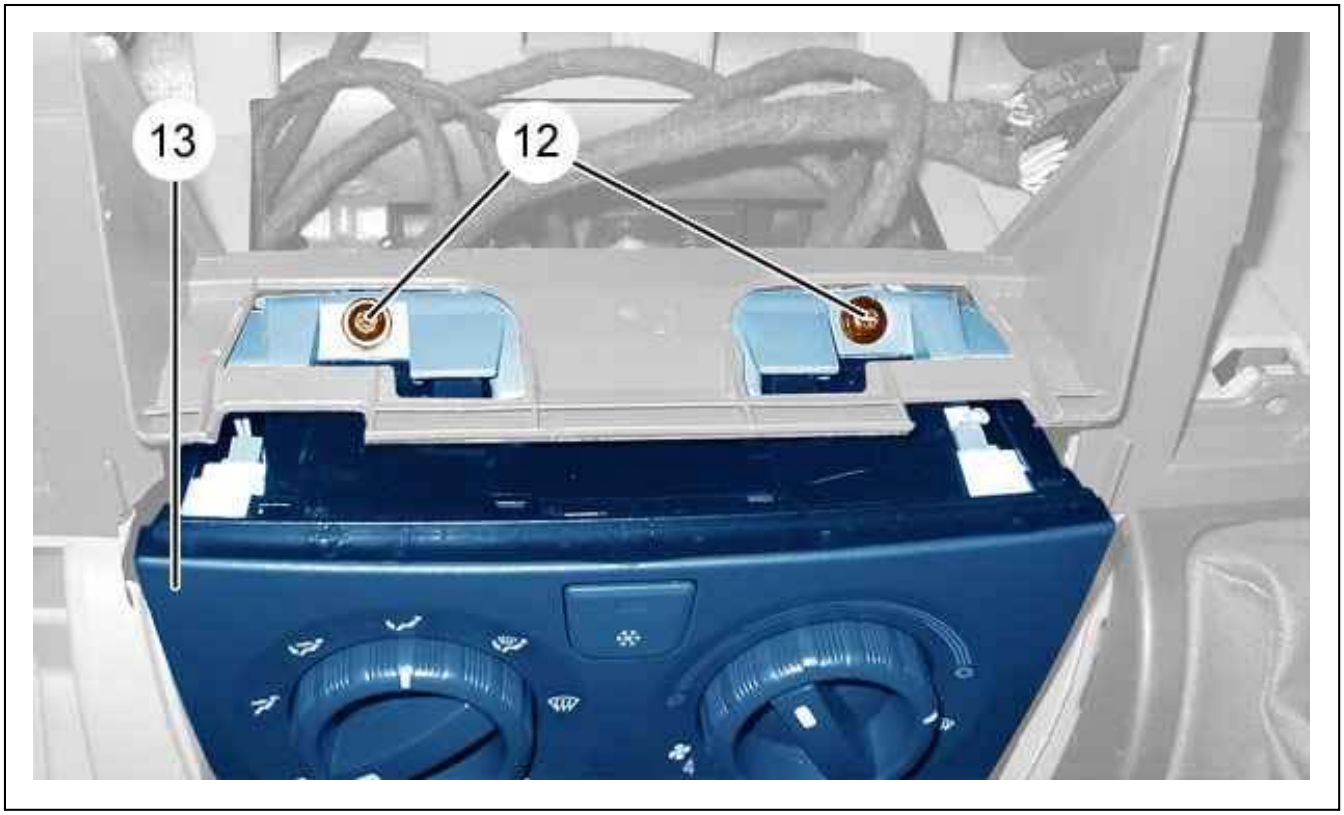

Figure : C5FS05AD

Remove the air conditioning control panel (13) bolts (12).
Push the air conditioning control panel (13) inside the fascia.

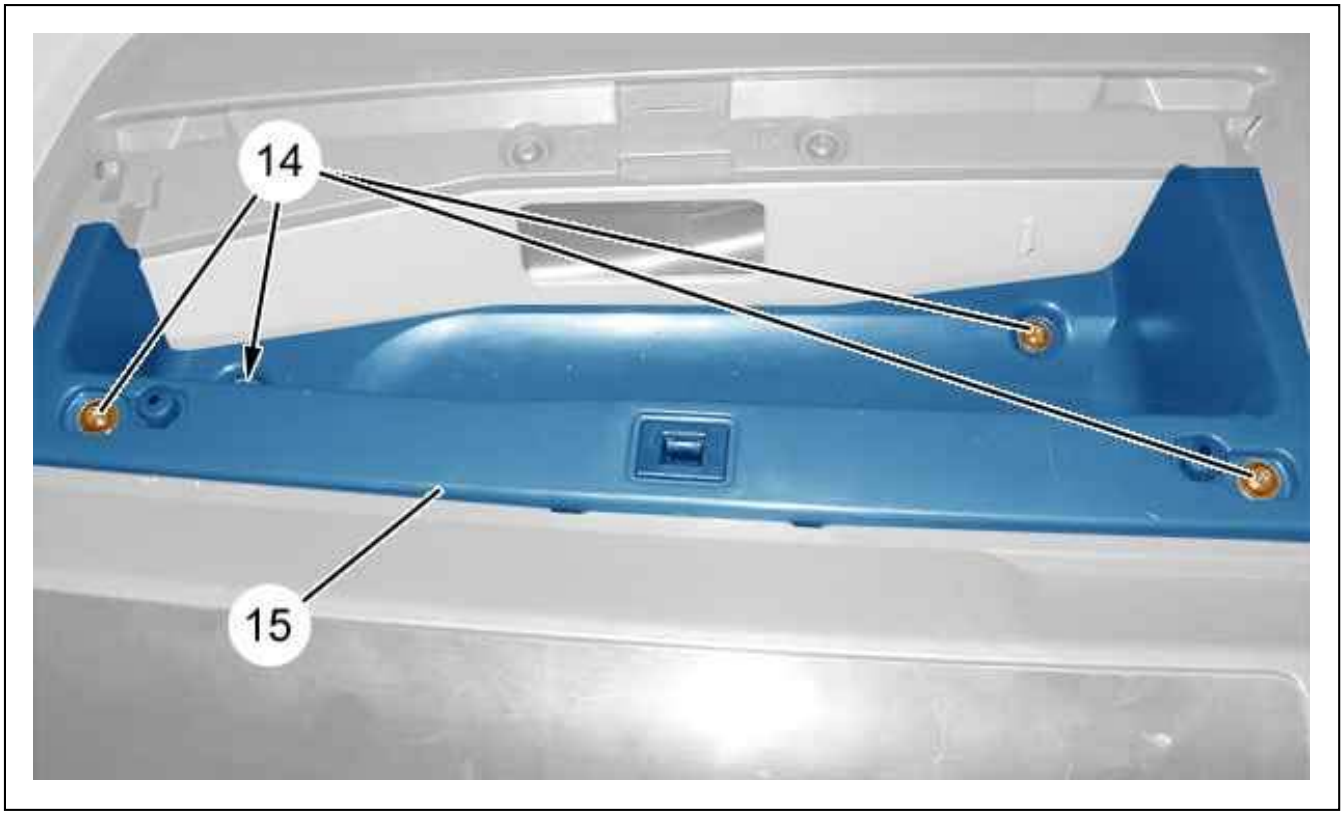

Figure : C5FS05BD

Remove :

- The right-hand upper glove box (15) bolts (14)
- The right-hand upper glove box (15)
- The passenger air bag

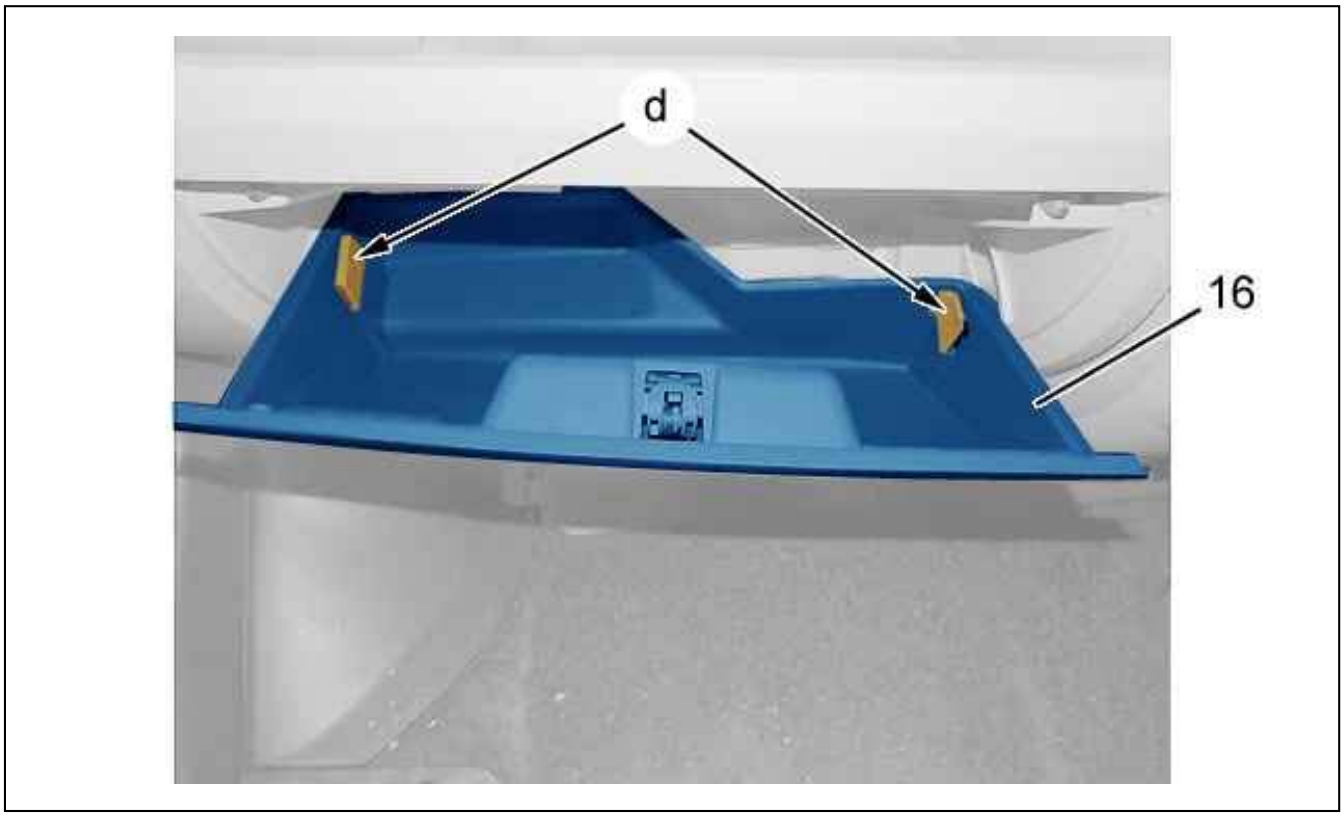

Figure : C5FS05SD

Unclip the right-hand lower glove box (16) at " d " ; Using tool [1350-ZZ].

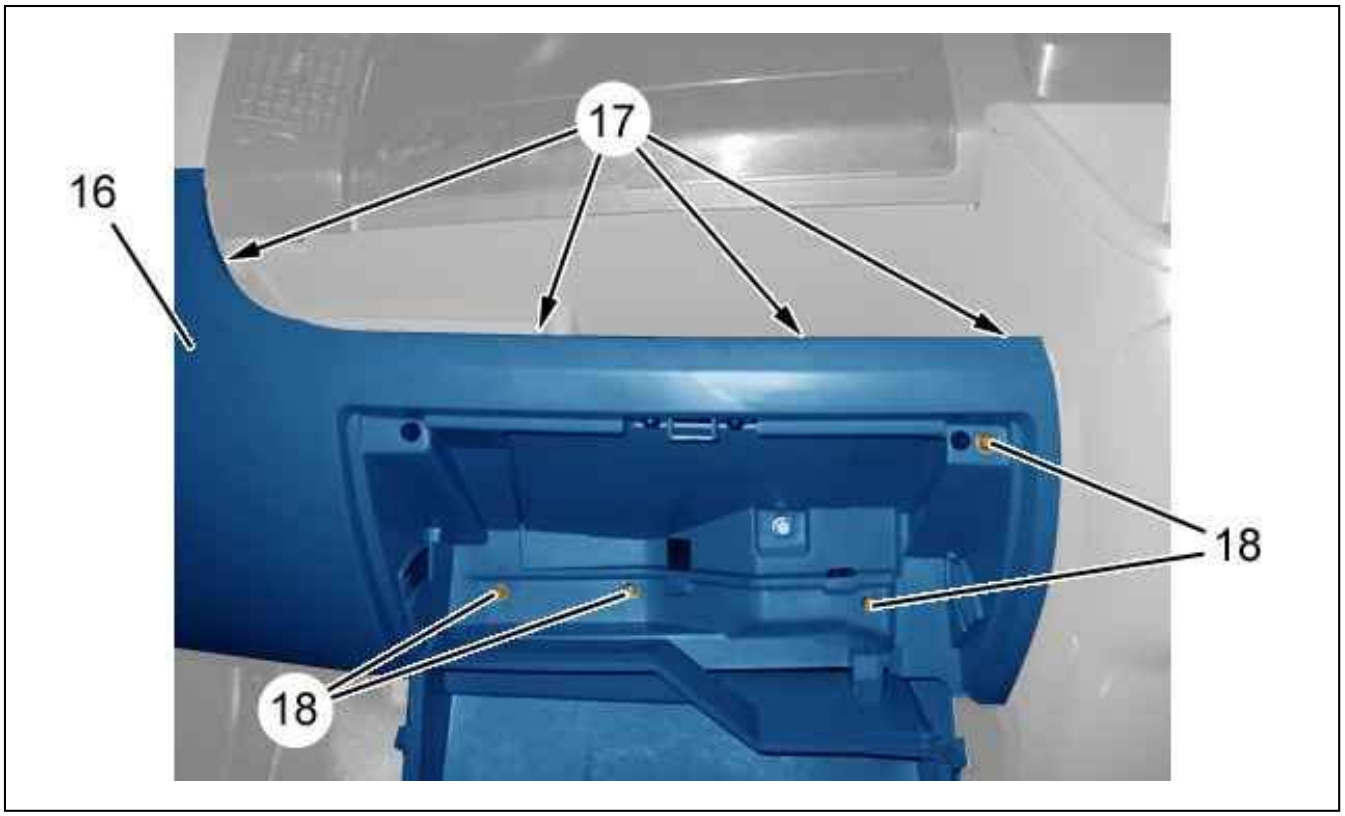

Figure : C5FS05CD

Remove :

- The bolts (17), (18)
- The right-hand lower glove box (16)

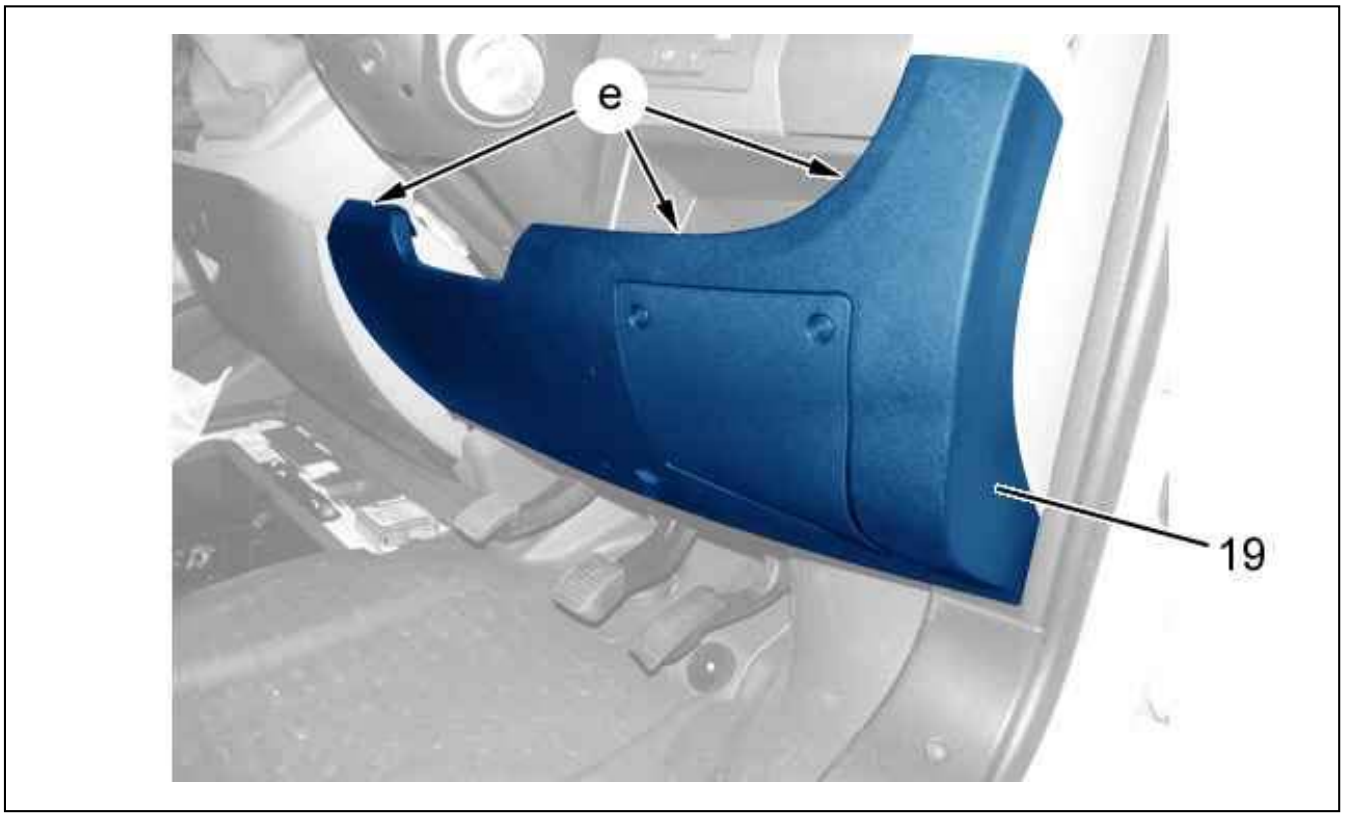

Figure : C5FS05DD

Remove :

- The left-hand lower trim bolts (19) (at "e")
- The left-hand lower trim (19)
- The bonnet opening control

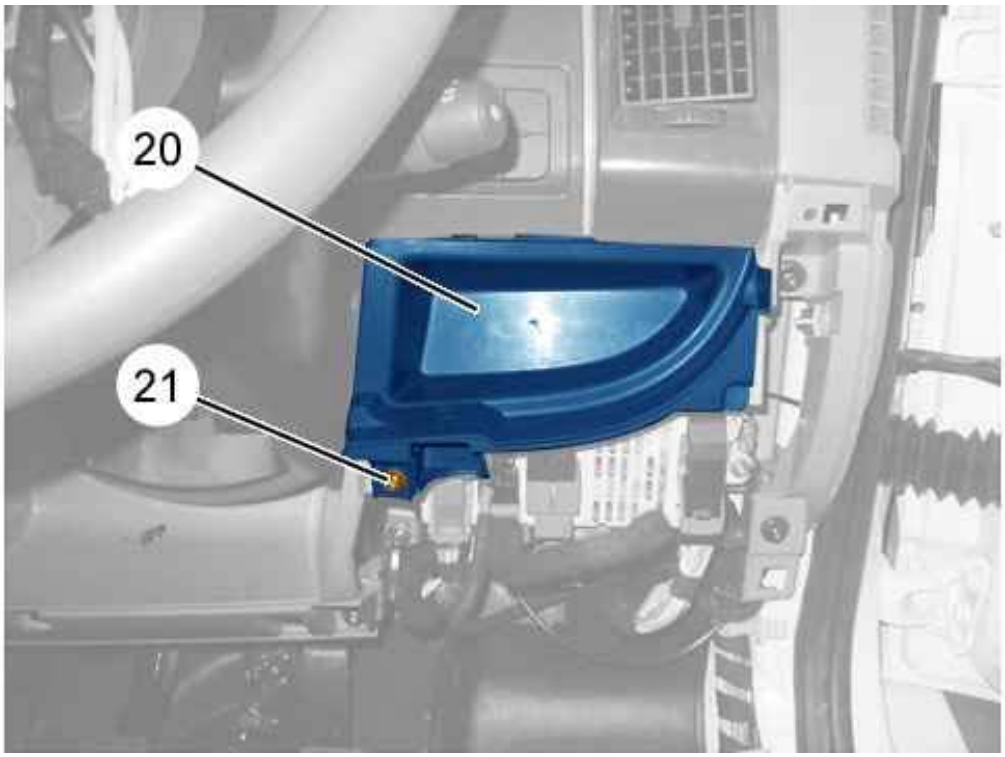

Figure : C5FS05ED

Remove :

- The (21) bolt
- The trim (20)



Figure : C5FS05FD

Remove the right-hand ventilation grille bolt (22) (at "f").
Unclip the right-hand ventilation grille (22) ; Using tool [1350-ZZ].



Figure : C5FS05HD

Remove the left-hand ventilation grille bolt (23) (at "g").

Unclip the left-hand ventilation grille (23) ; Using tool [1350-ZZ].

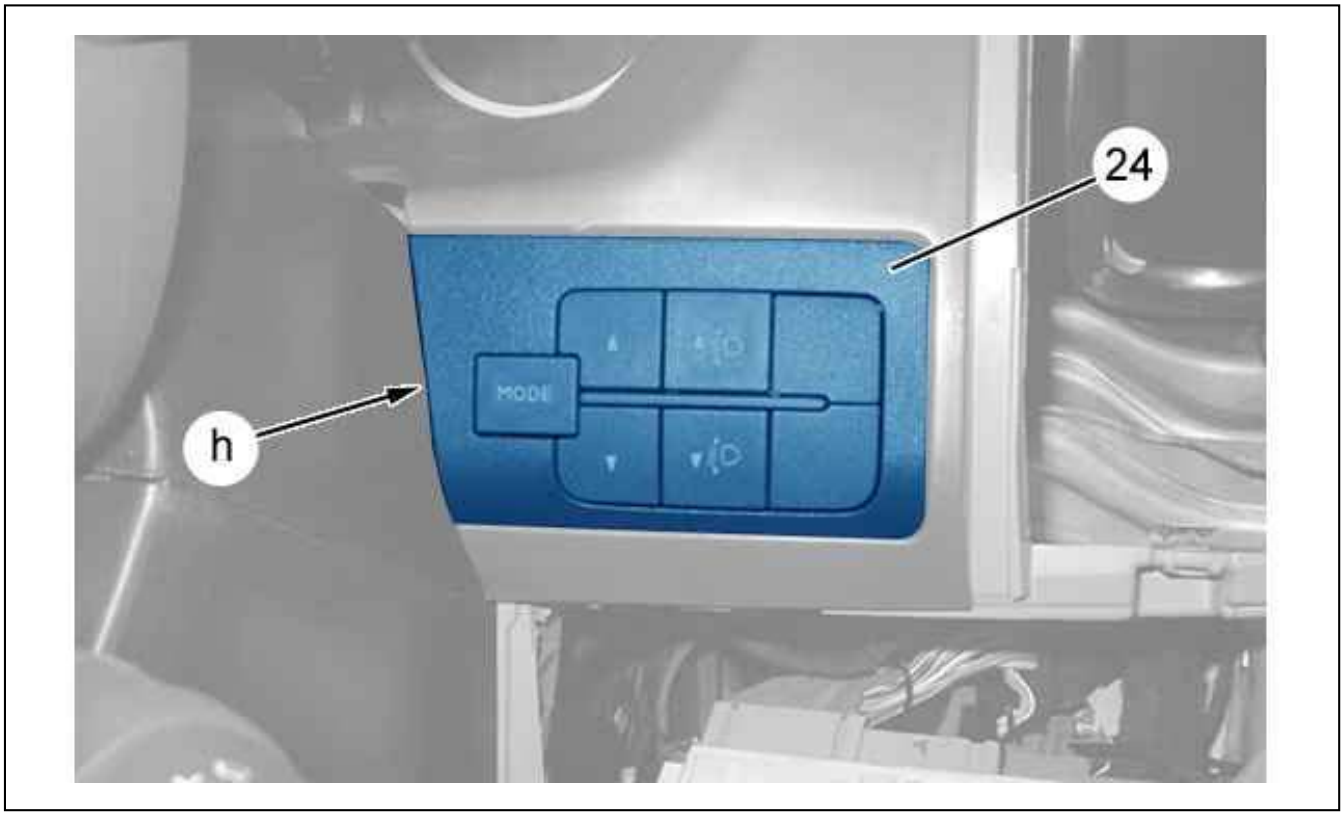

Figure : C5FS05JD

Unclip the headlamp adjustment control (24) at " h " ; Using tool [1350-ZZ].
Detach the headlamp adjustment control (24) (partly).

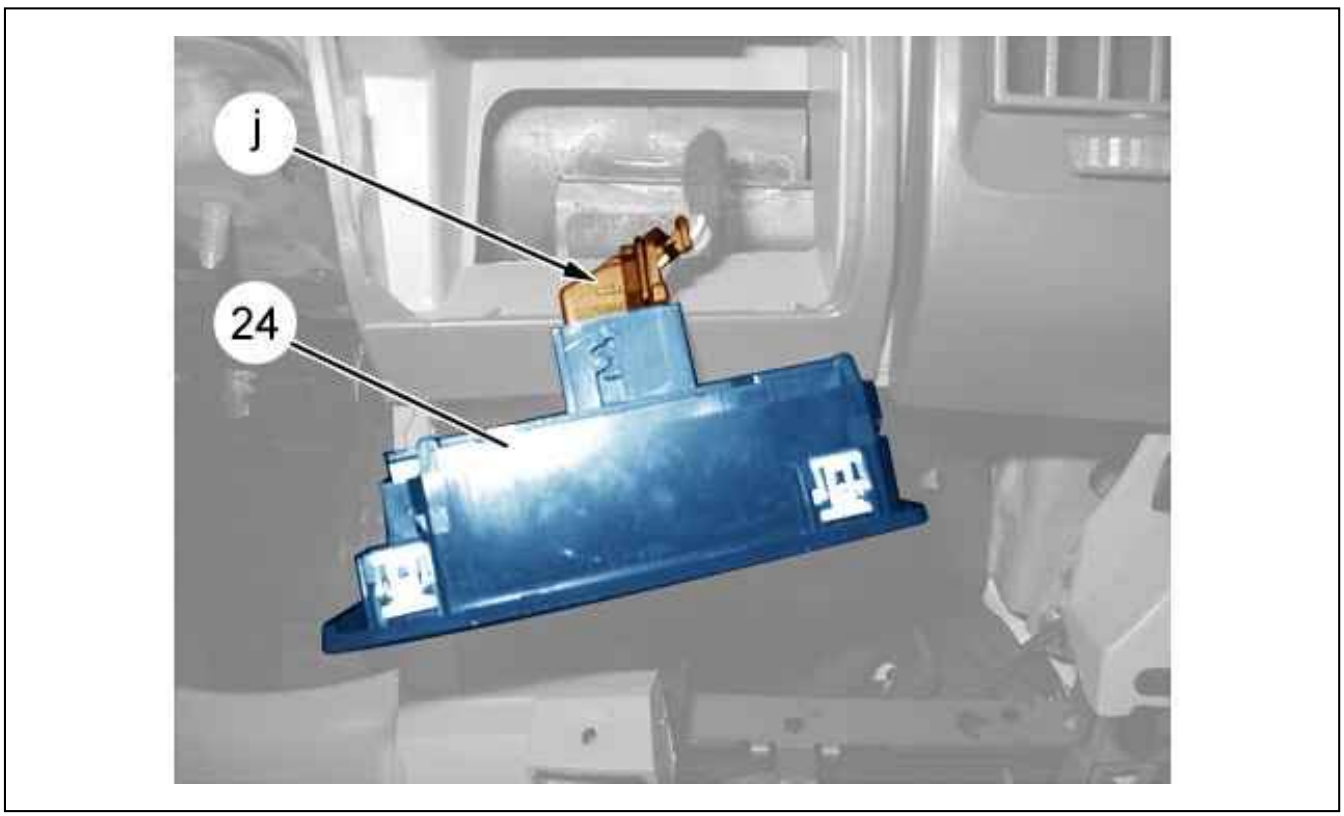

Figure : C5FS05KD

Disconnect the connector (at "j").
Remove the headlamp adjustment control (24).

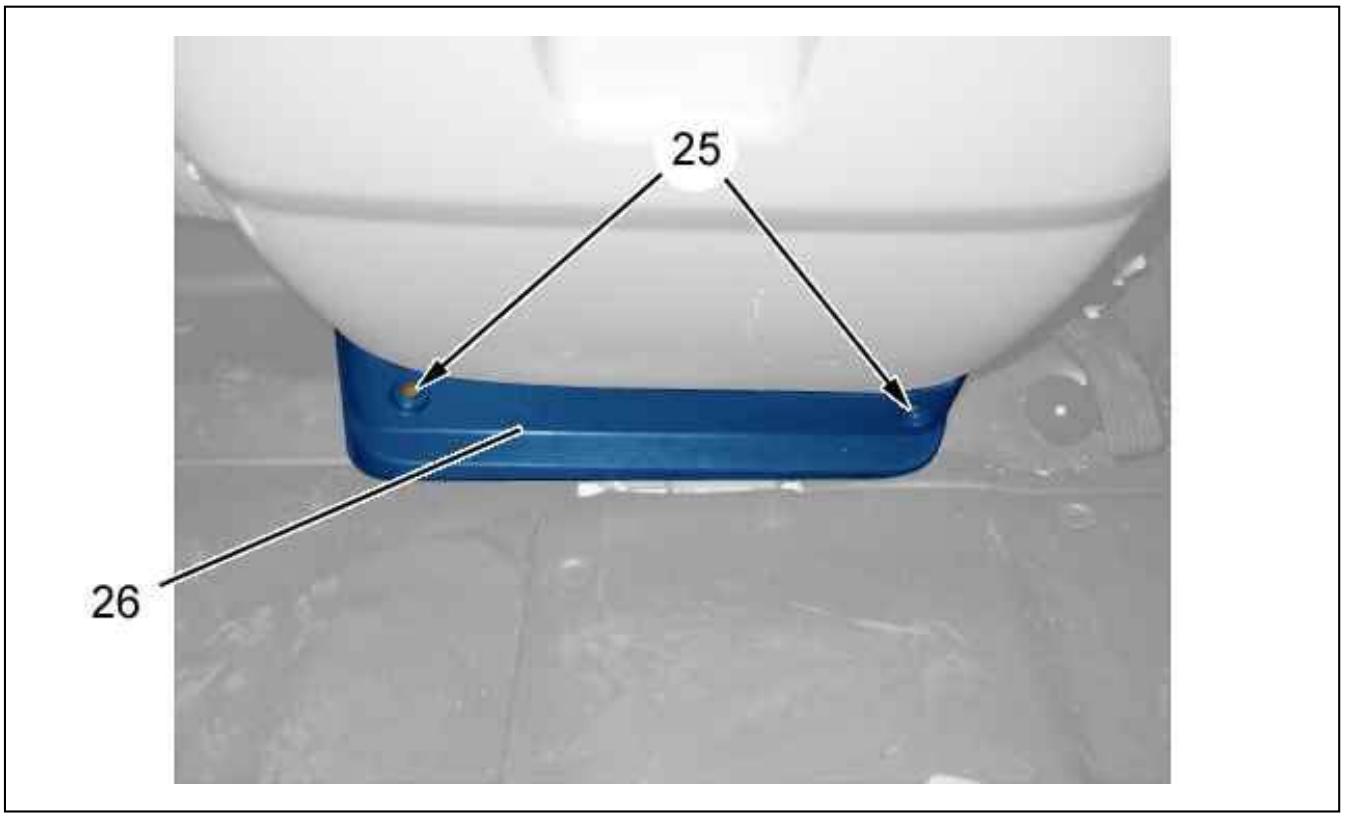

Figure : C5FS05LD

Remove :

- The central glove box lower trim (26) bolts (25)
- The central glove box lower trim (26)



Figure : C5FS05MD

Remove the central glove box (28) bolts (27).
Detach the central glove box (28) (partly).

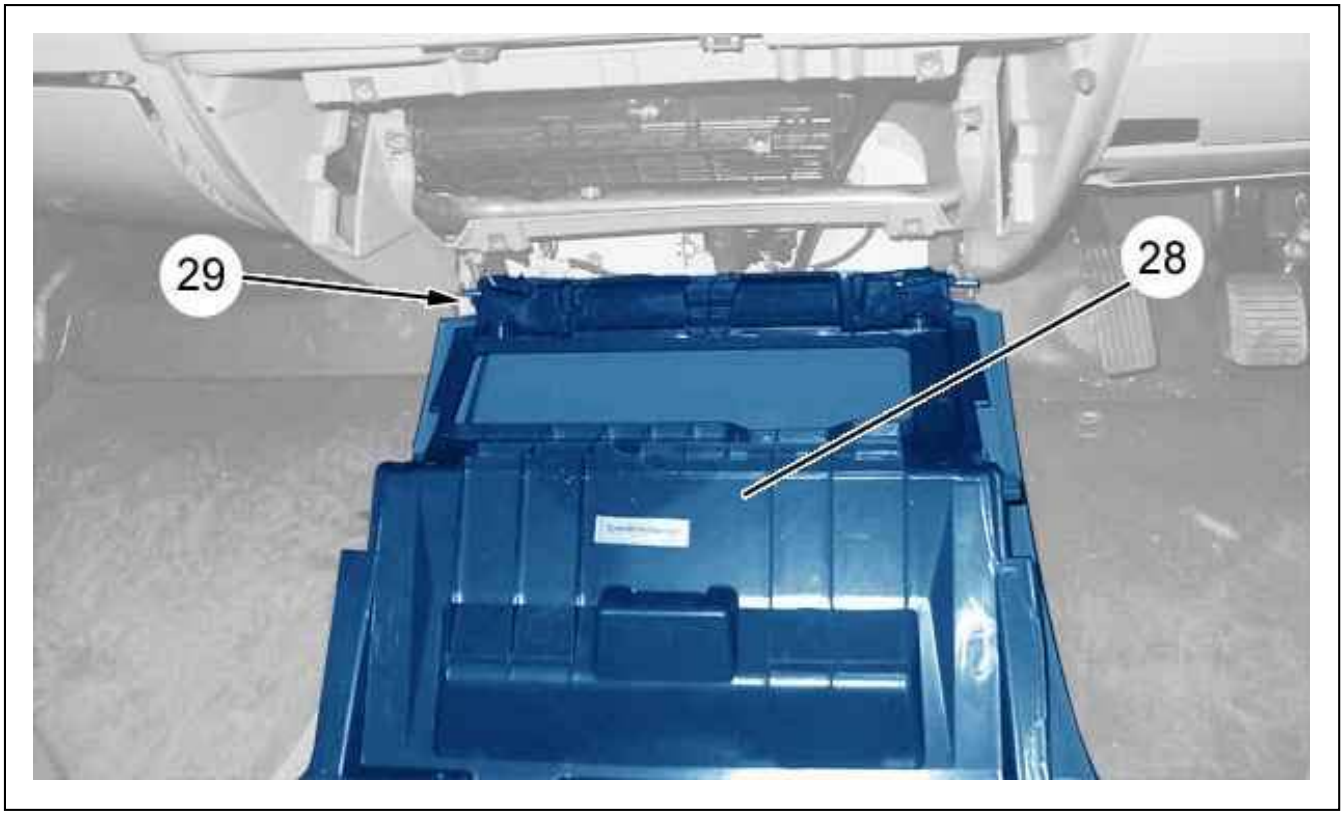

Figure : C5FS05ND

Remove :

- The central glove box (28) nut (29)
- The central glove box (28)
- The instrument panel

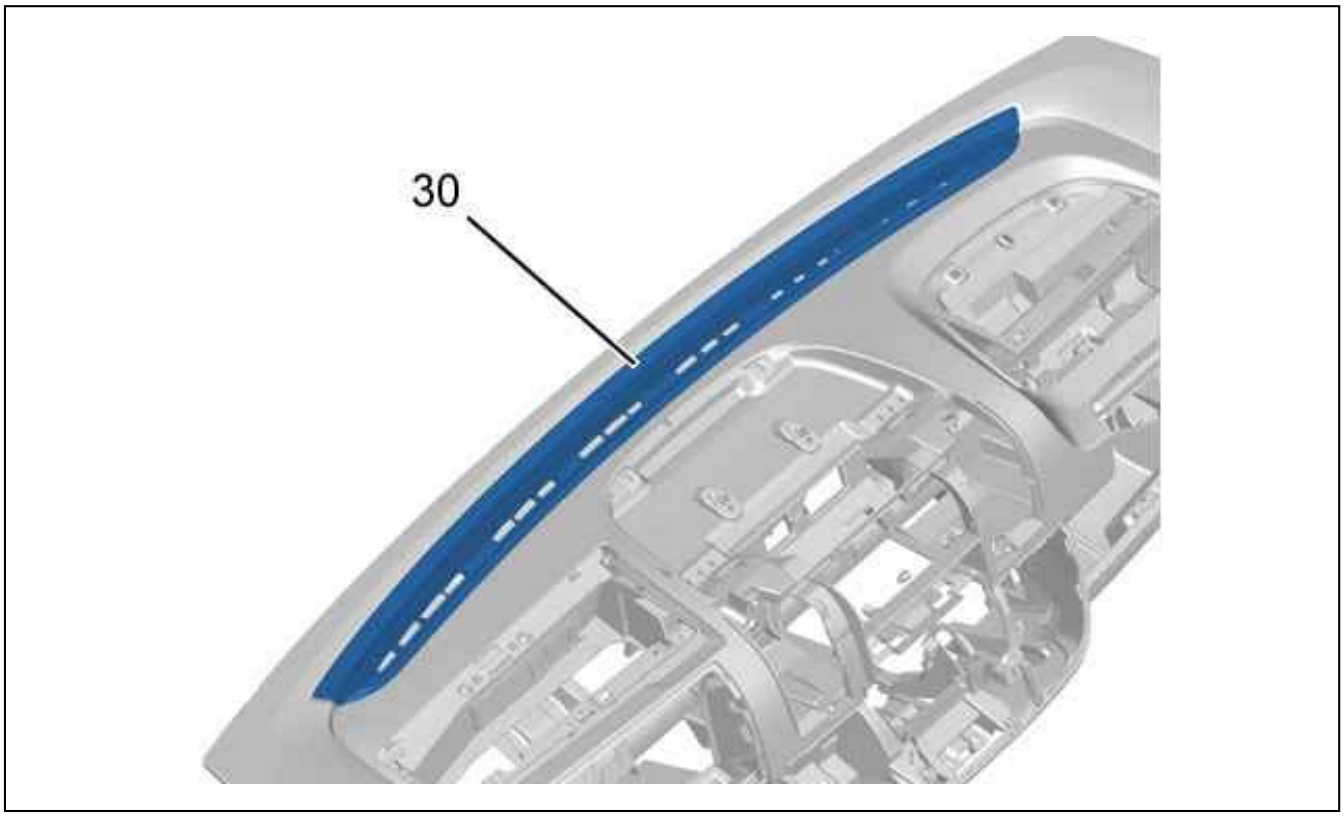

Figure : C5FS05OD

Unclip the fascia upper ventilation grille (30) ; Using tool [1350-ZZ].
Remove the fascia upper ventilation grille (30).

3. Re-assembling

Carry out the re-trim operations in the reverse order to the stripping operations.
Check all the equipment works.

REMOVING - REFITTING : AIR BLOWER CONTROL(REAR)

ESSENTIAL : Observe the safety and cleanliness recommendations.

1. Recommended tools

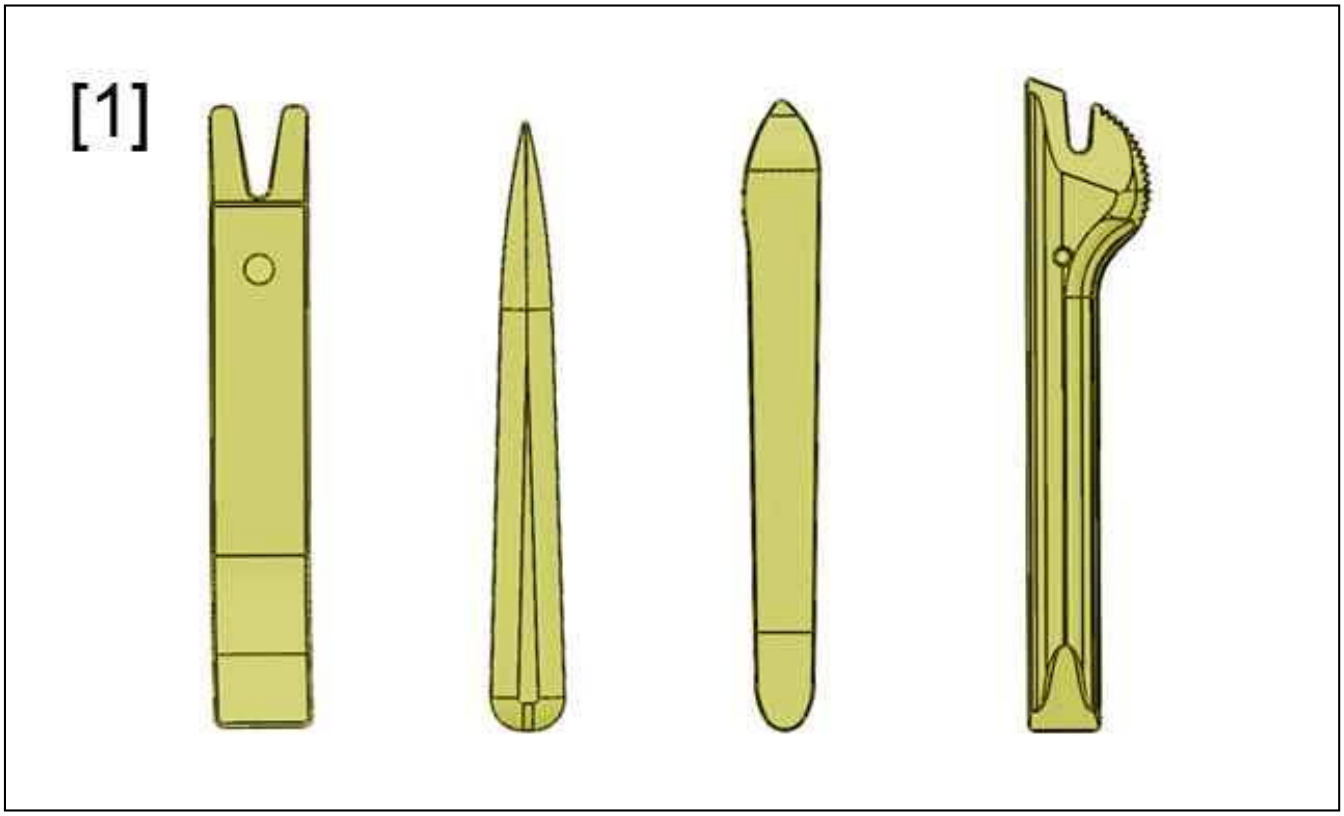

Figure : E5AP30WD

[1]Stripping tool (-).1350-ZZ.

2. Removing

Perform the following operations :

- Switch off the ignition
- Wait 3 minutes before disconnecting the battery
- Disconnect the battery

2.1. Air blower control (Rear)

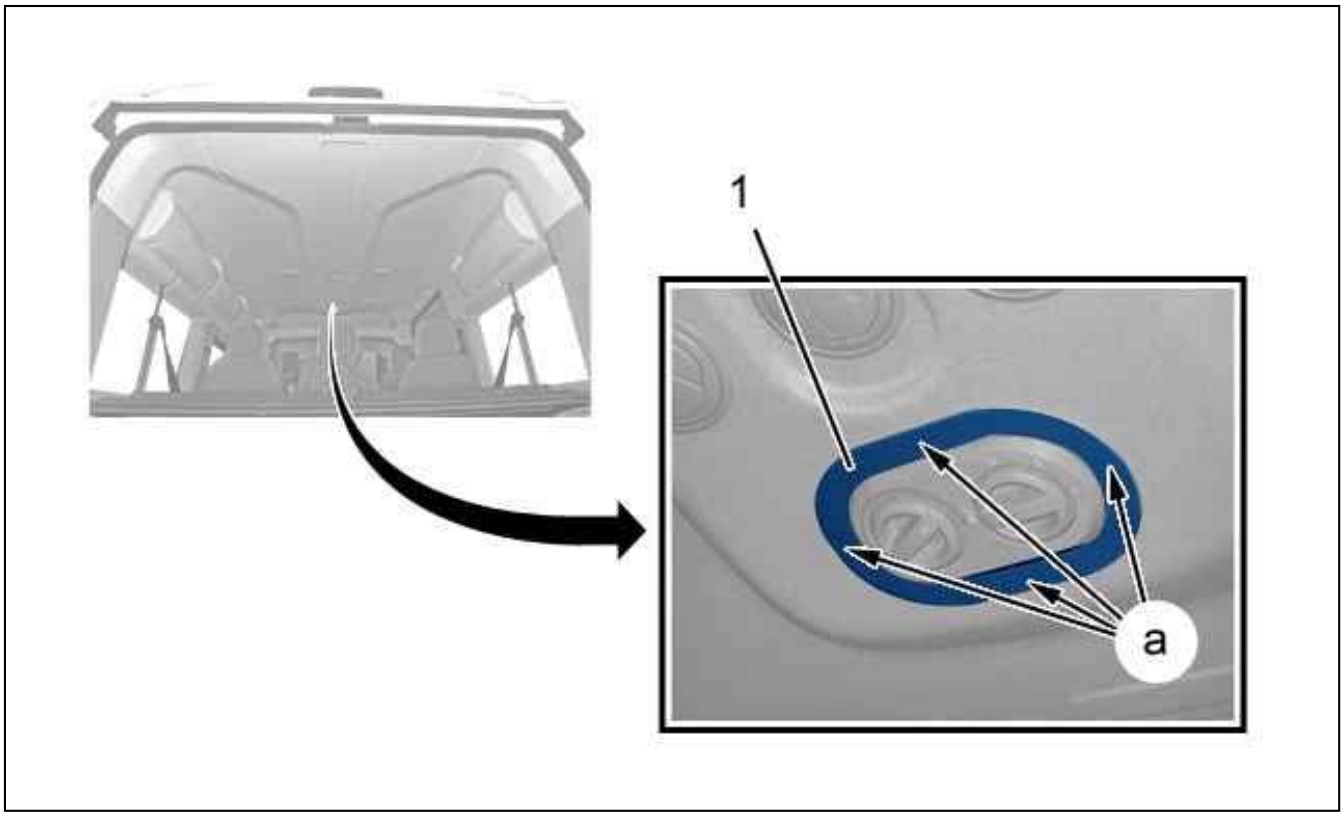

Figure : C5GM0BSD

Unclip the trim (1) (at "a") ; Using tool [1].
Remove the trim (1).

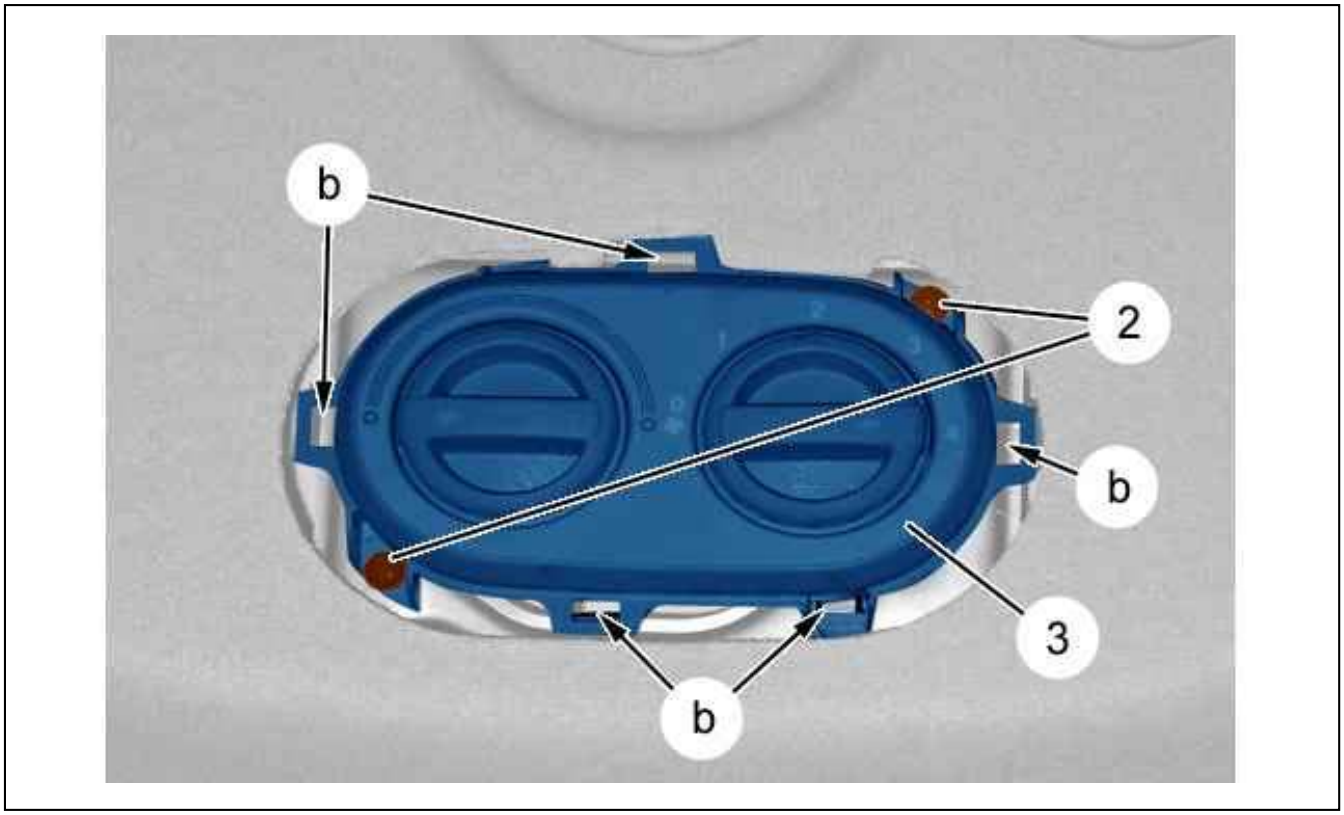

Figure : C5HM046D

Remove the bolts (2).

Unclip : The control (3) (Rear air blower) (at "b").
Detach : The control (3) (Rear air blower).

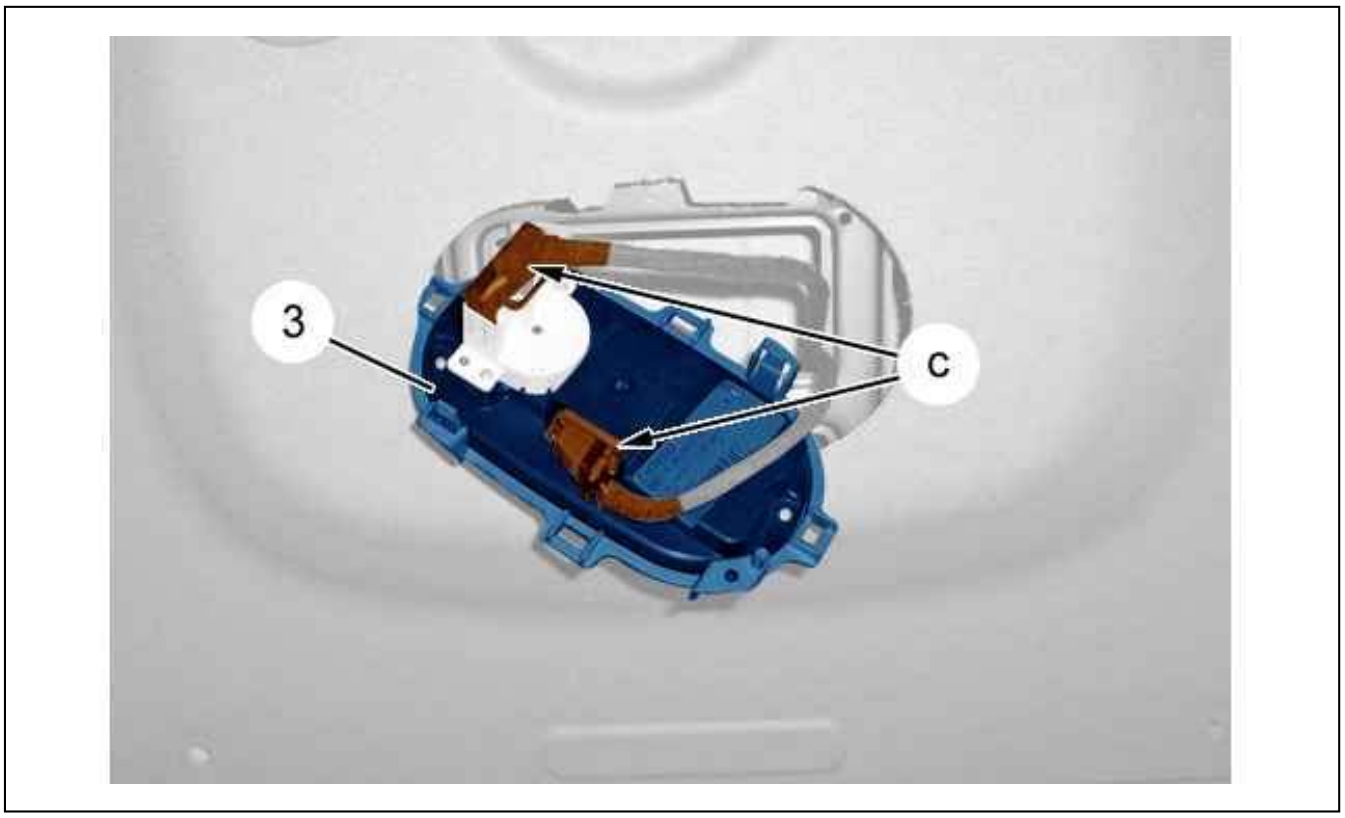

Figure : C5HM047D

Disconnect the connectors (at "c").
Remove : The control (3)(Rear air blower).

2.2. Switch support (Rear air blower)

Detach the central trim (Roof panel).

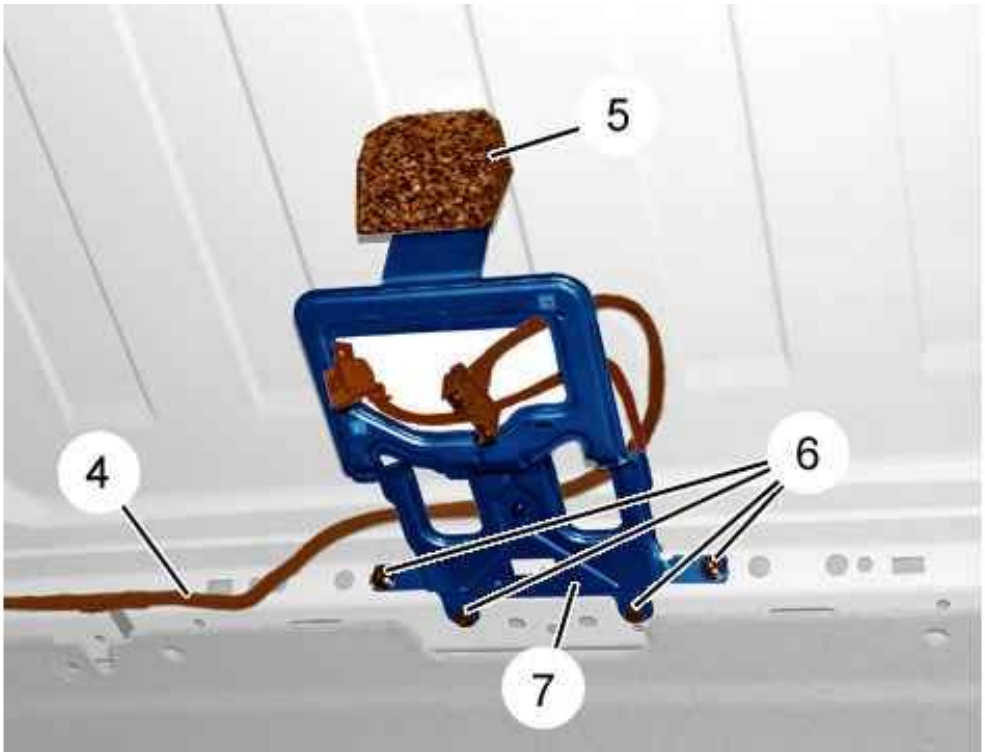

Figure : C5HM048D

Release the harness (4).
Detach : The soundproofing (5).
Remove :

- The bolts (6)
- The control support (7) (Rear air blower)

3. Refitting

Proceed in the reverse order to removal.
Tighten the bolts (6) to 1 ± 0,1 daN.m.
Check all the equipment works.

REMOVING - REFITTING : ENGINE - GEARBOX

ESSENTIAL : Observe the safety and cleanliness recommendations .

1. Tooling

Tools	Reference	Designation
 Figure : E5AB0OGT	[0004]	lifting bench
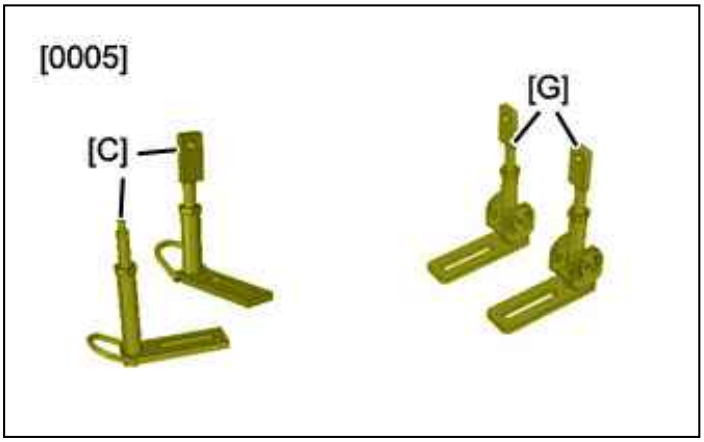 Figure : E5AB0EJT	[0005-C]	set of retaining supports
	[0005-G]	set of retaining supports
	[0188-T]	Set of plugs

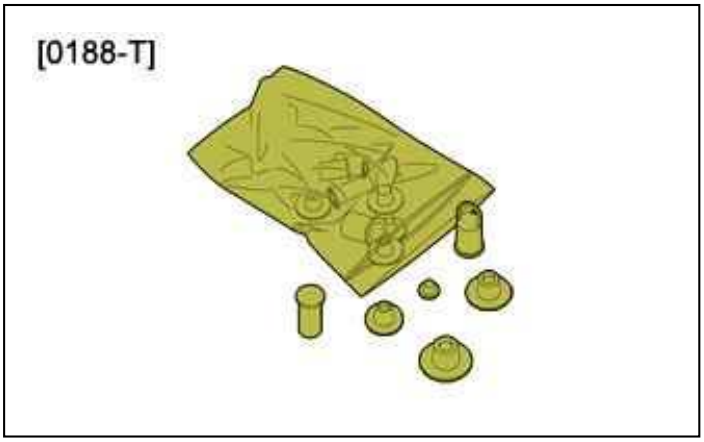

Figure : E5AB06IT

2. Removing

ESSENTIAL : Respect the safety and cleanliness recommendations that are specific to high pressure diesel injection (HDi) engines .

Disconnect the battery.
Place the vehicle on a 2-post lift.
Drain :

- The engine cooling system
- The gearbox

Remove :

- The central section of the lower front panel
- The right-hand headlamp
- The front wheels
- The protection plates under the engine
- The drive shafts
- The pre-catalytic converter

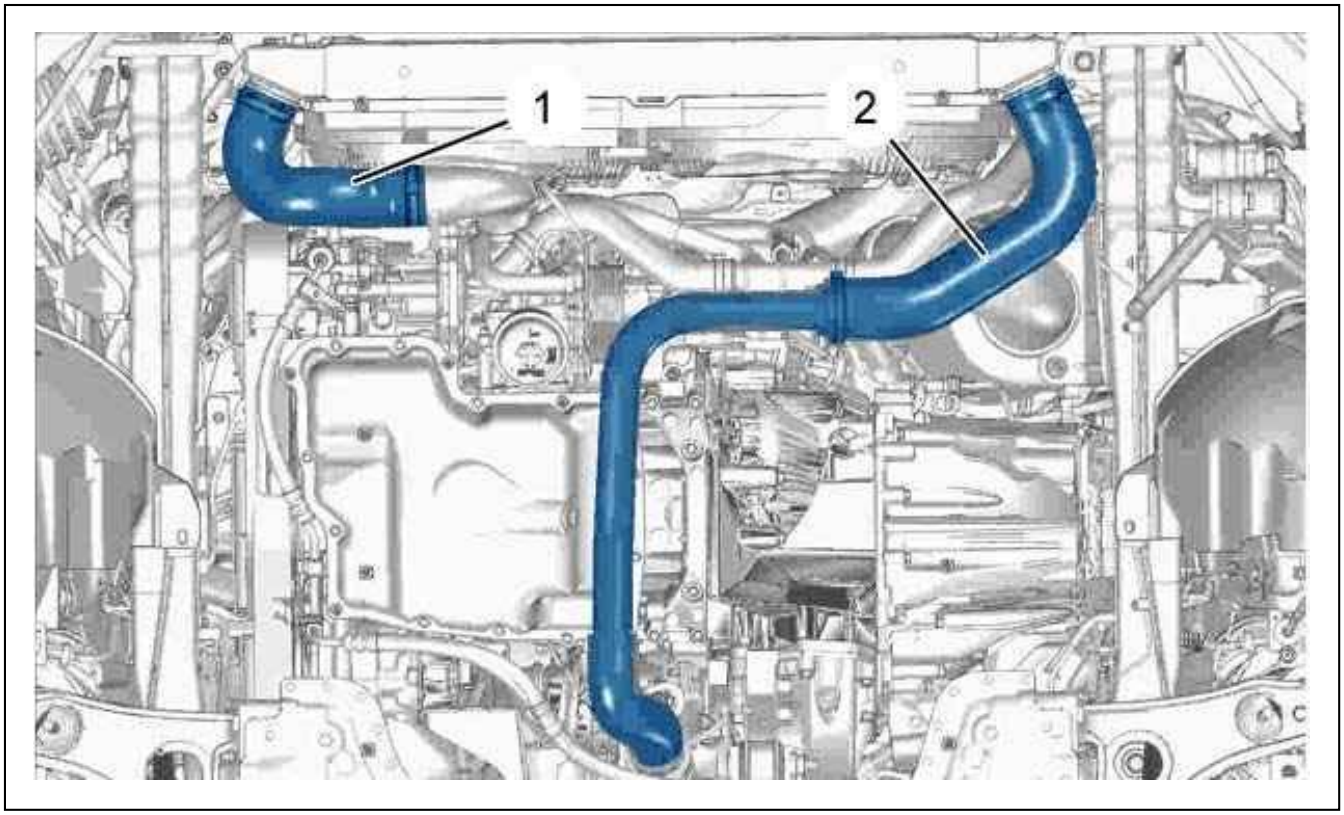

Figure : B1BG2YYD

Uncouple :

- The turbocharging air cooler air outlet hose (1)
- The turbocharger air outlet pipe (2)

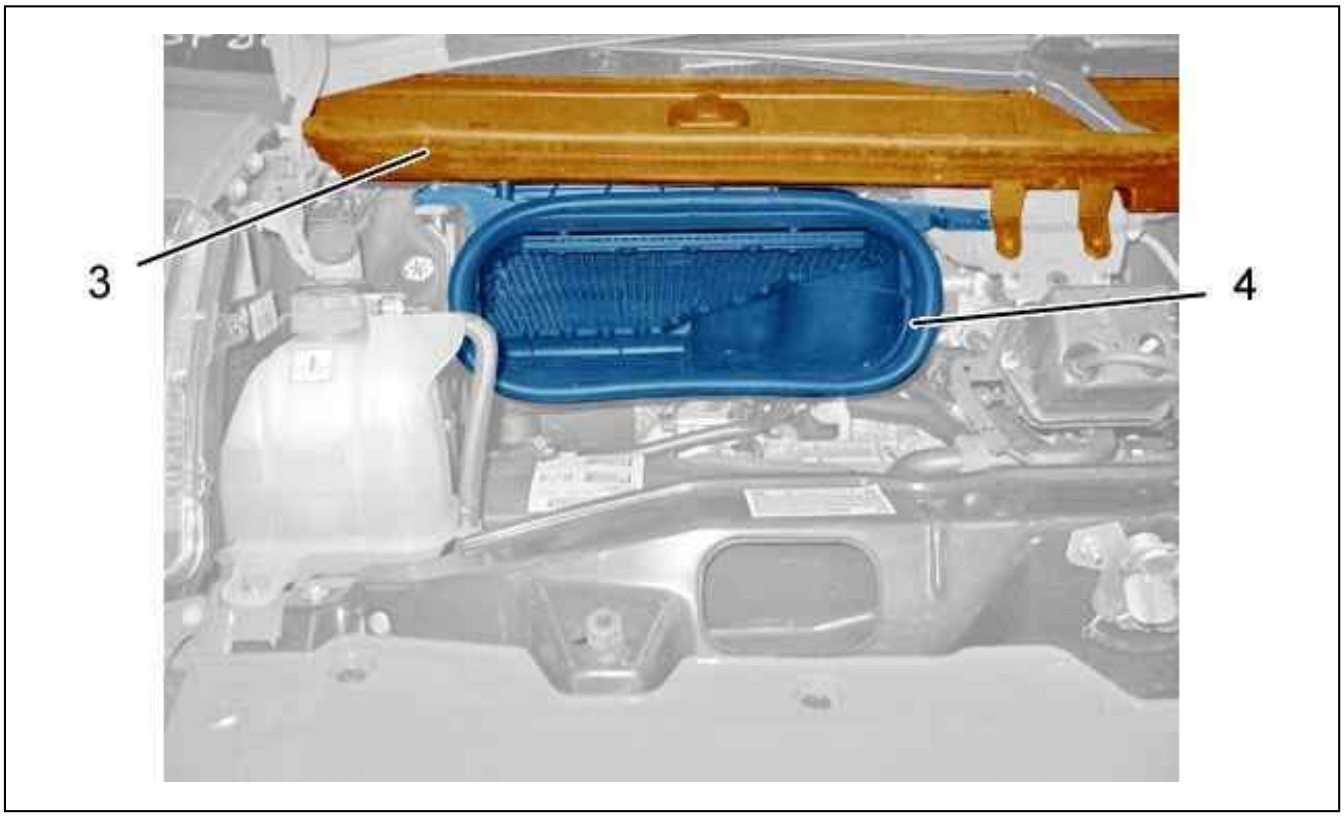

Figure : B1BG2YZD

Carefully lift the scuttle panel (3).
Remove the air intake (4).

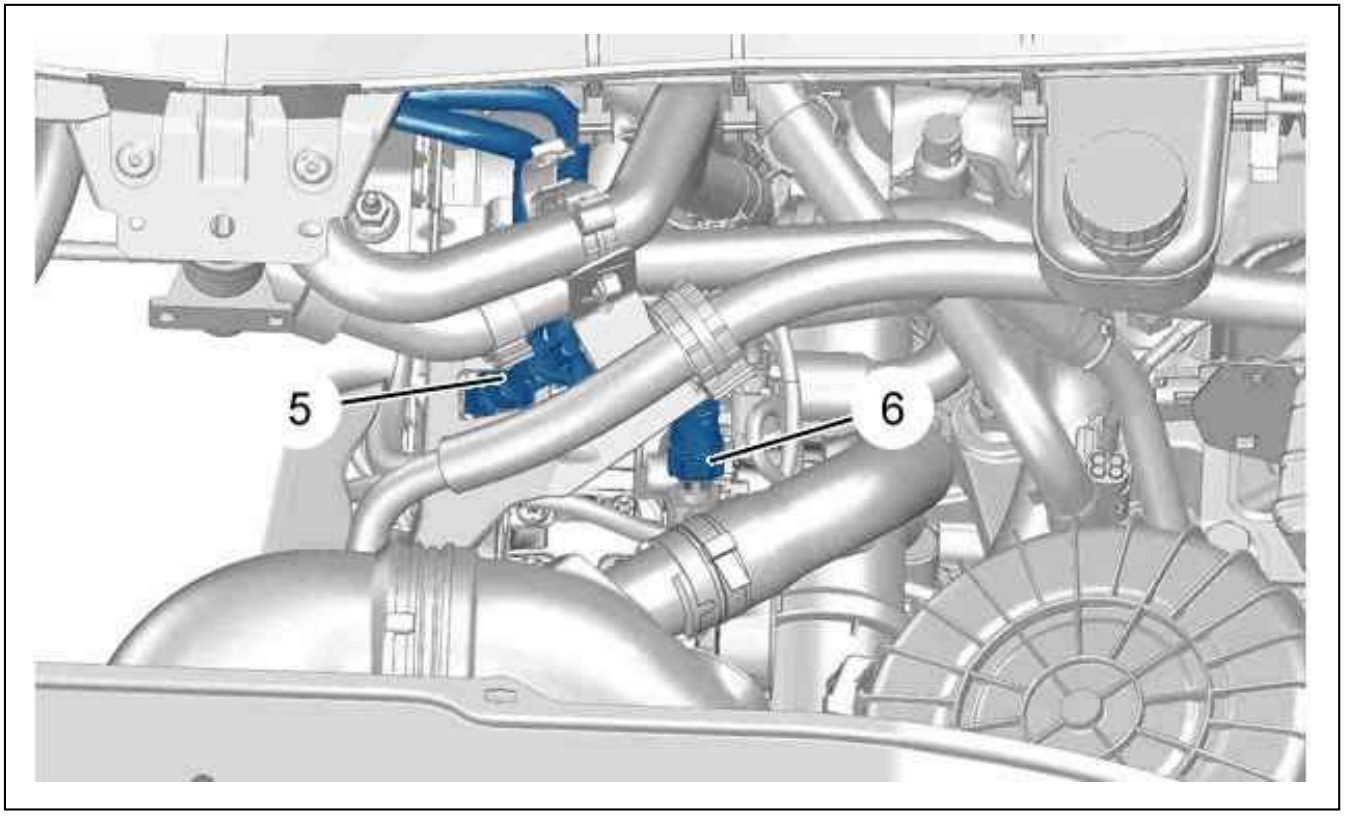

Figure : B1BG2Z0D

Uncouple : The fuel supply and return pipes (5), (6).
Close : The fuel supply and return pipes (5), (6) ; Using tool [0188-T].

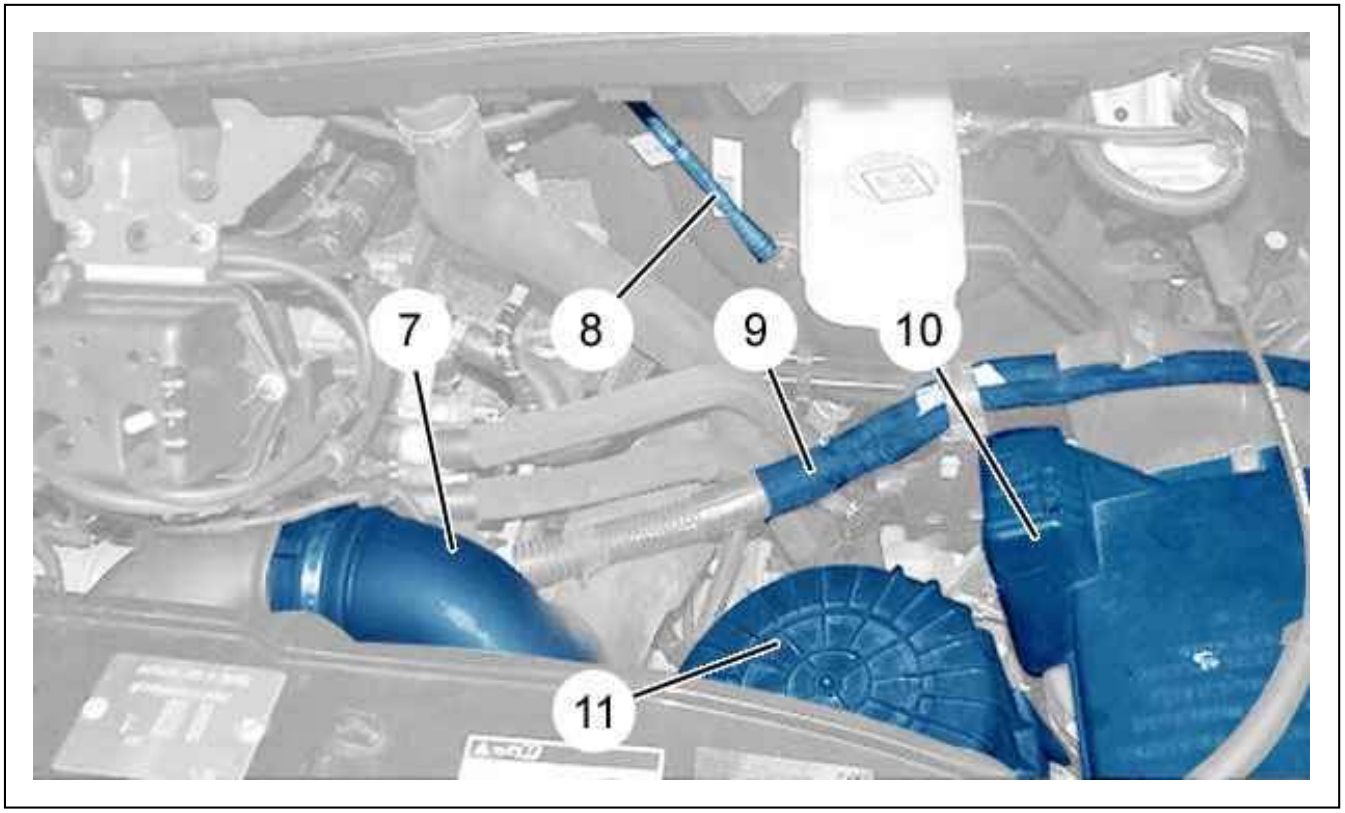

Figure : B1BG2Z1D

Remove : The braking assistance pipe (8).
Close : The braking assistance pipe (8) ; Using tool [0188-T].
Remove :

- The clips (Electrical harness (9))
- The cover (10)
- The air filter housing (11)
- The air duct (7)

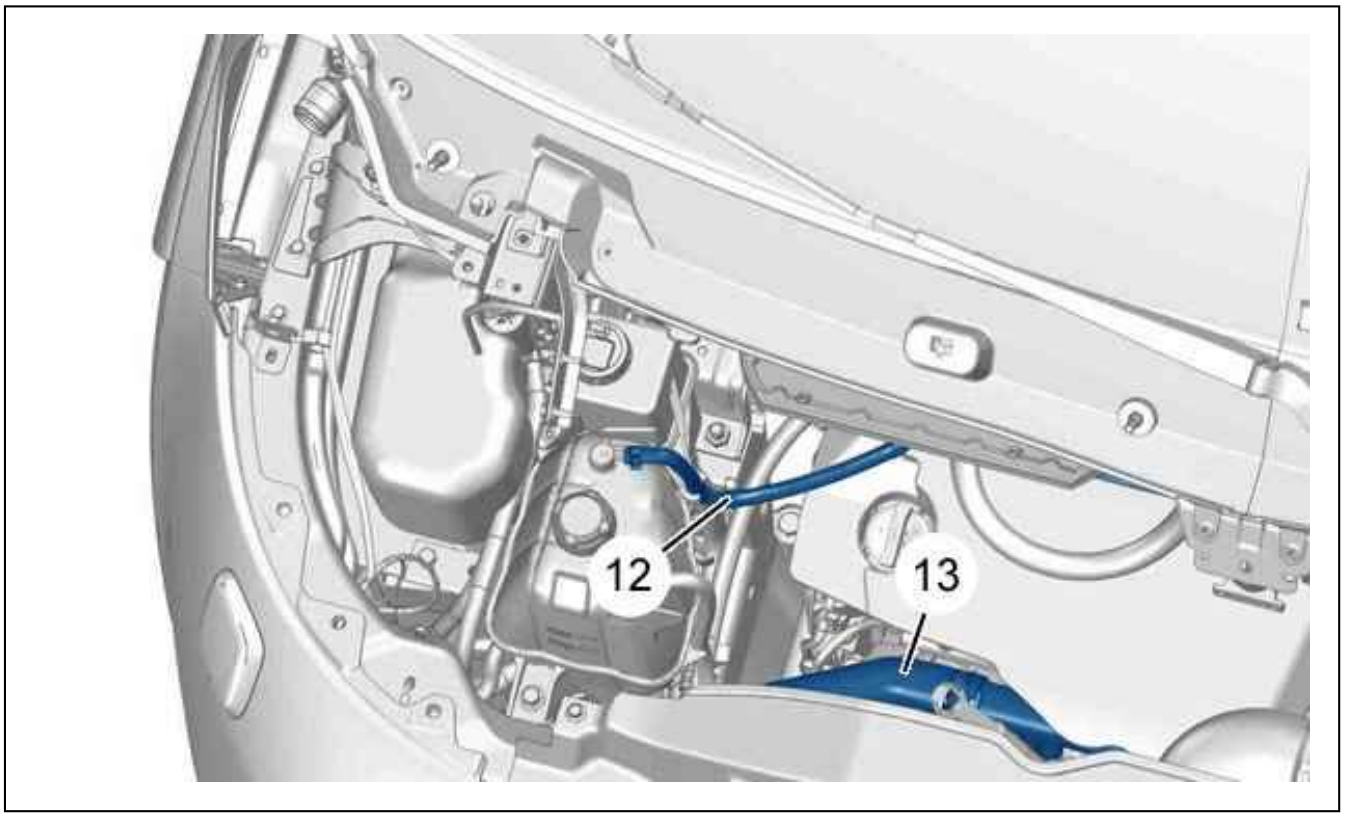

Figure : B1BG2Z2D

Release : The expansion bottle pipe (12).
Uncouple : The radiator top hose (13).

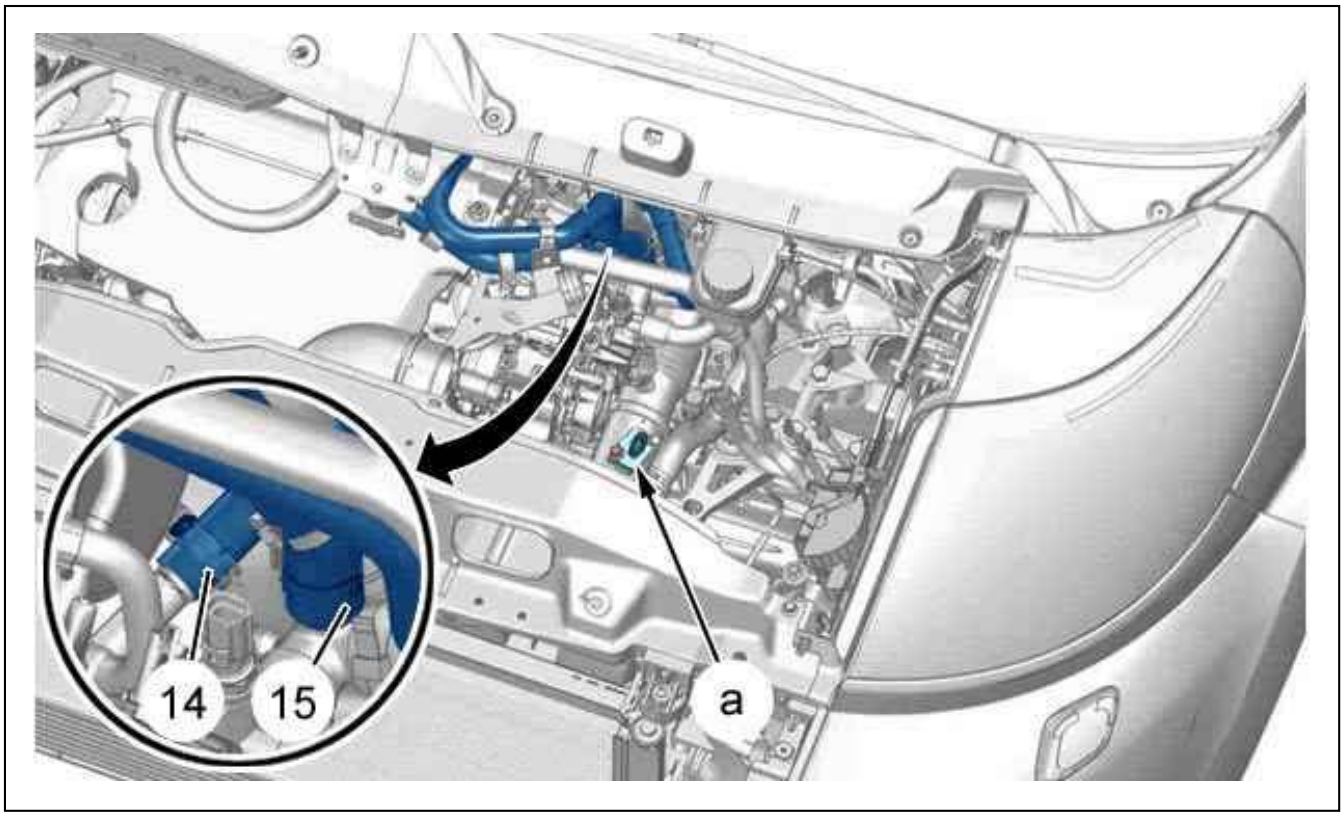

Figure : B1BG2Z3D

Disconnect the air flowmeter (at "a").
Uncouple : The heater matrix inlet and outlet hoses (14), (15).

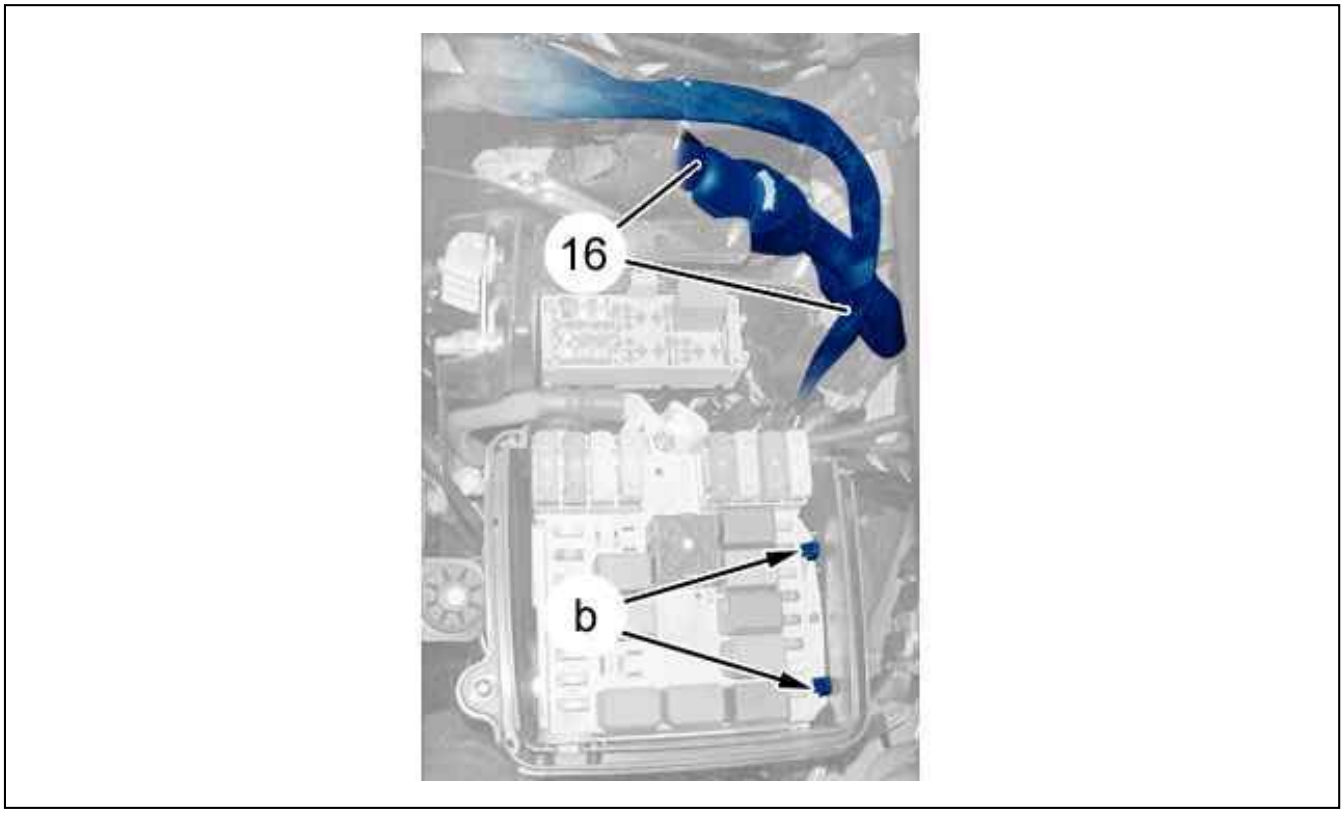

Figure : B1BG2Z4D

Remove the cover of the fuse box .

Unclip and detach The fuse box (at "b").
Disconnect the electric harnesses (16).

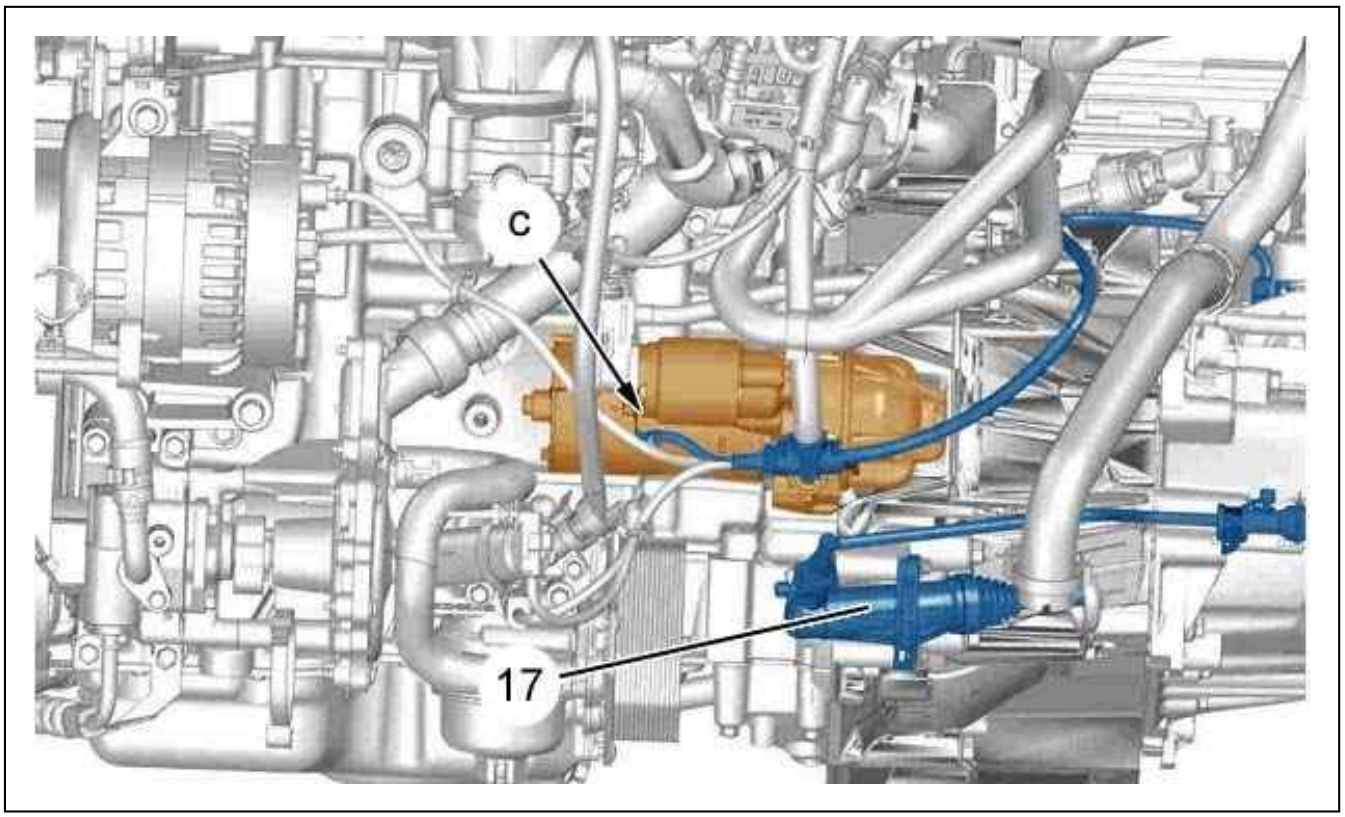

Figure : B1BG2Z5D

Detach and move aside : The hydraulic clutch control (17).
Disconnect the starter supply at "c".
Detach : The gear control and selection cables .
Move aside and suspend the power steering pump .
Move aside and suspend the air conditioning compressor on the side of the vehicle (Without opening the cooling circuit) (according to equipment).

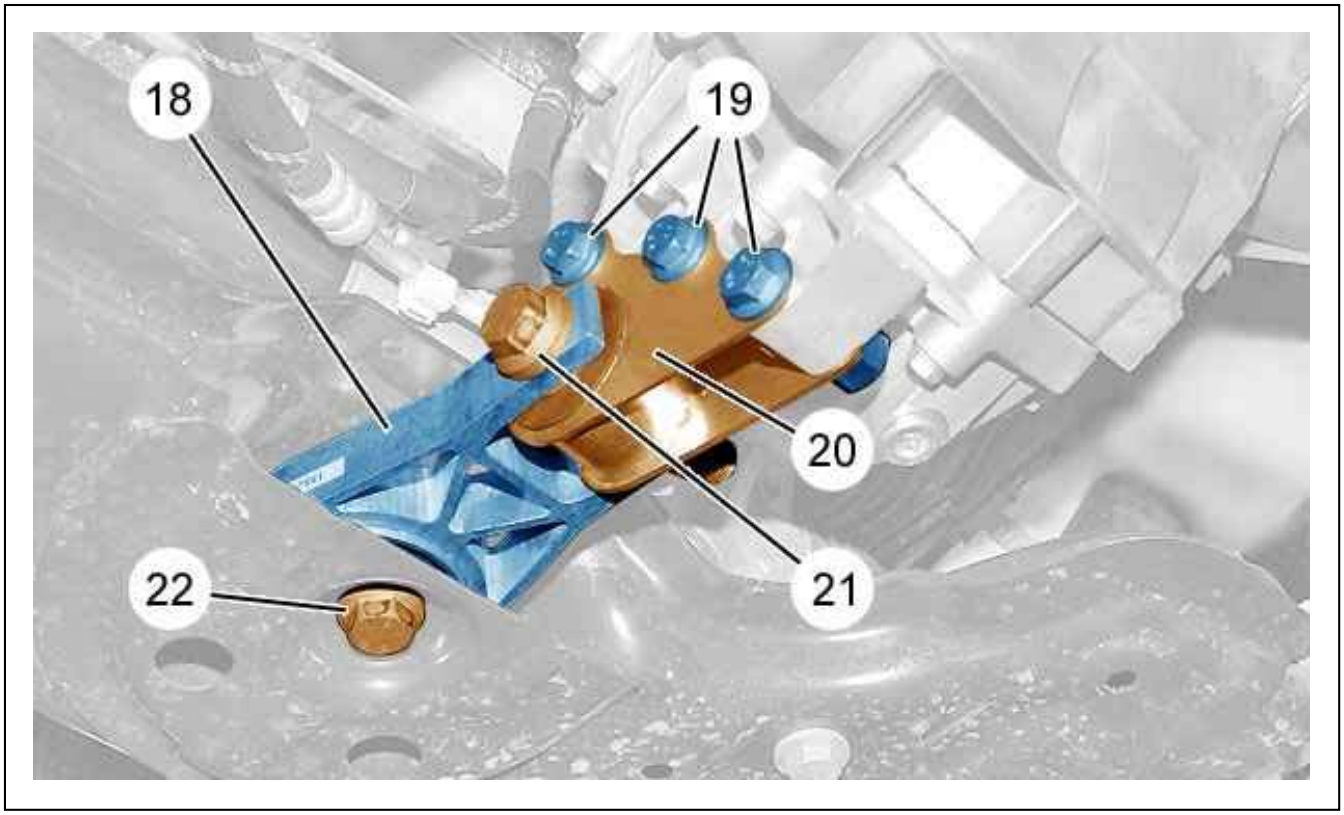

Figure : B1BG2Z6D

Remove :

- The bolt (21)
- The bolts (19)
- The bracket (20) (Reaction rod (18))
- The bolt (22)
- The reaction link (18)

Introduce the lifting table [0004] with its brackets [0005-C], [0005-G] under the engine.
Lift the elevating platform [0004].

2.1. Turbo side

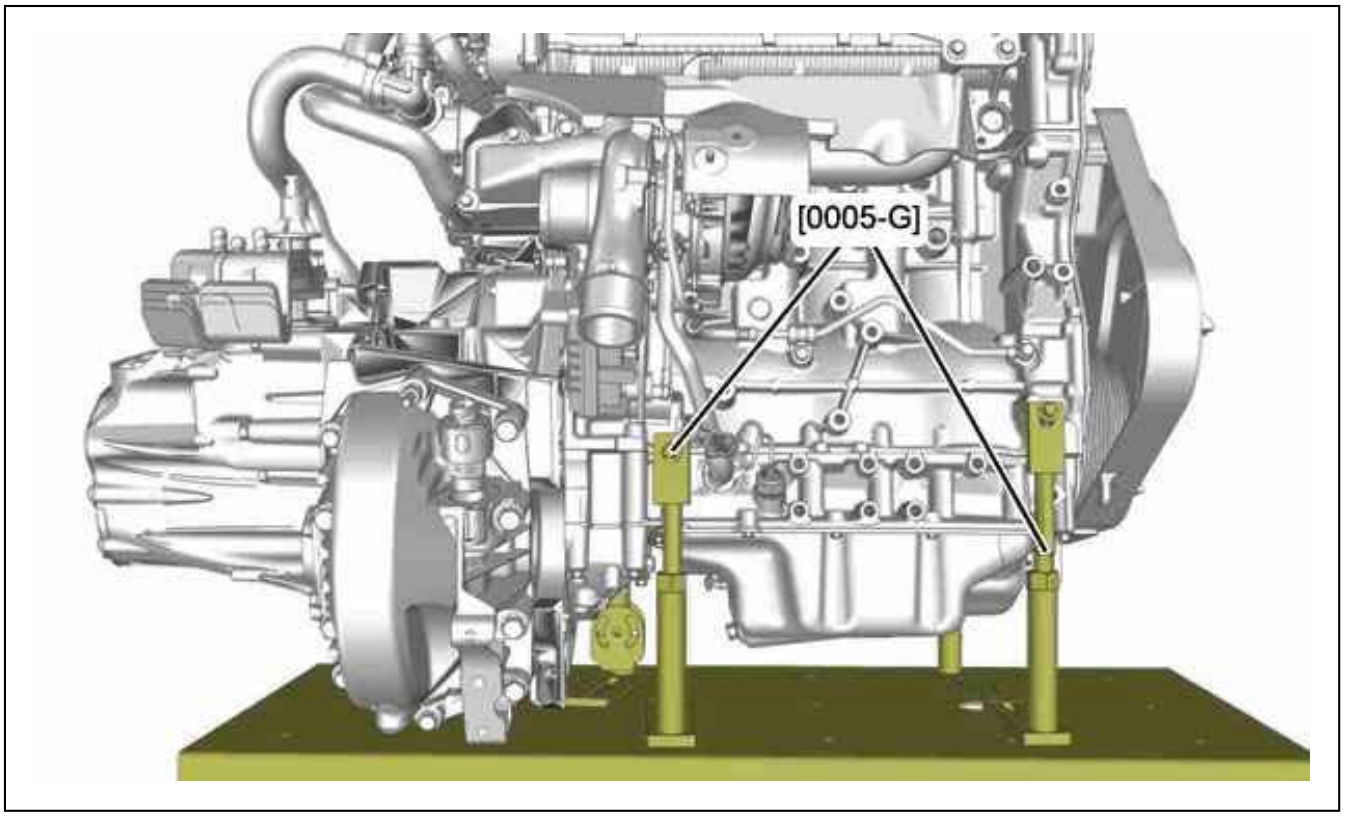

Figure : B1BG2Z7D

Position :

- One support [0005-G] on the turbocharger outlet pipe fixing
- Another support [0005-G] on the air conditioning compressor fixing

2.2. Oil filter side

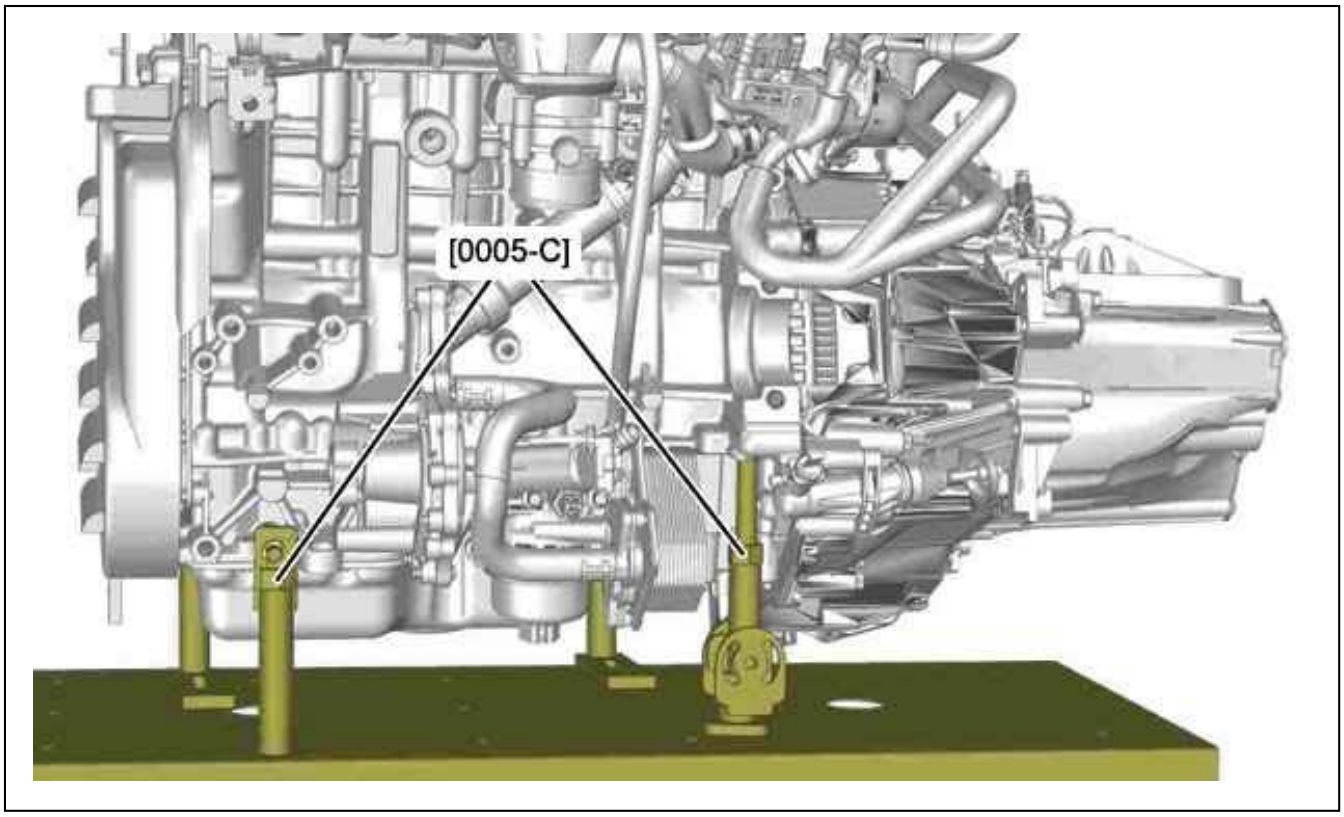

Figure : B1BG2Z8D

Position :

- One support [0005-C] on a power steering pump fixing
- Another support [0005-C] in the engine cylinder block blind hole

2.3. Removing (continued)

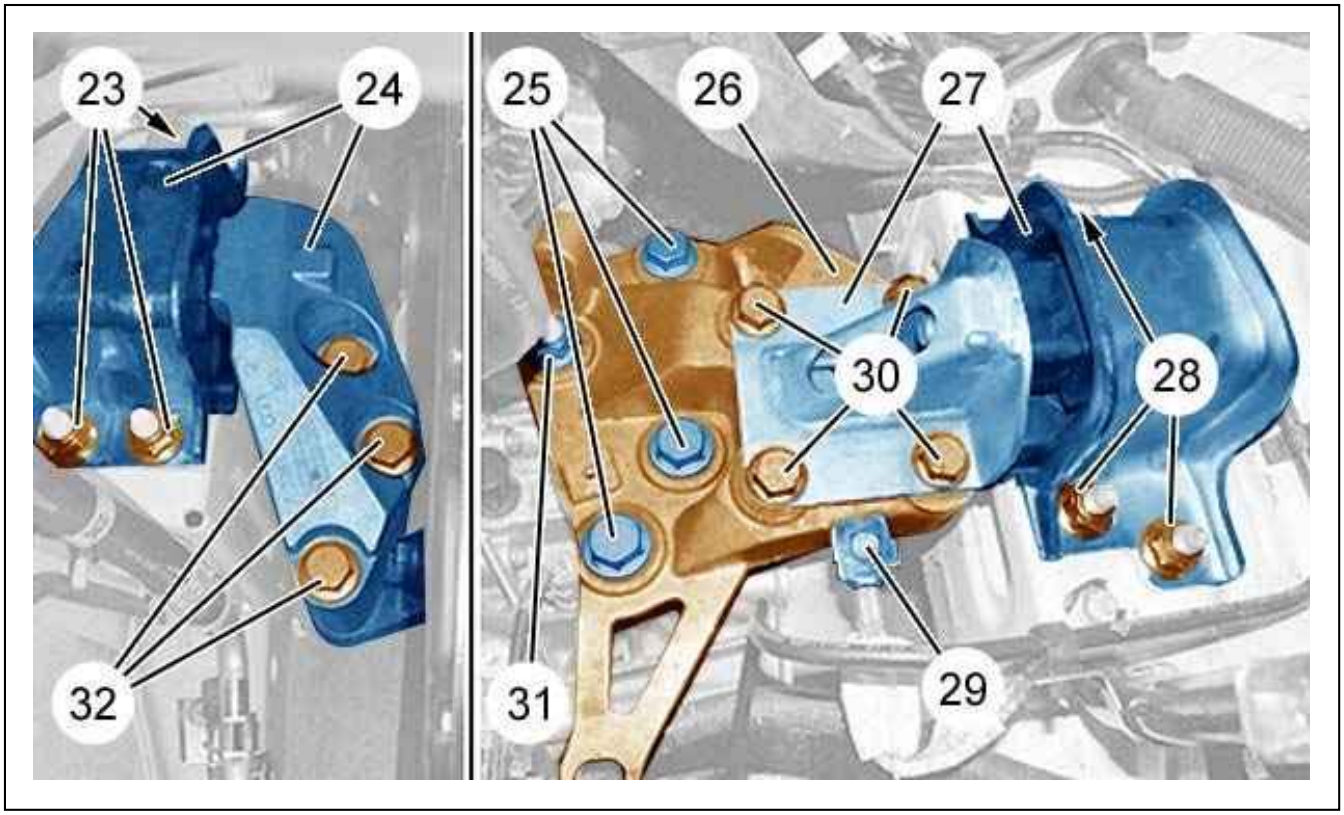

Figure : B1BG2Z9D

Remove :

- The nuts (23), (31), (28)
- The bolts (32), (25), (30)
- The engine mounting (24)
- The engine mounting (27)
- The earth braid (29)
- The engine mounting (26)

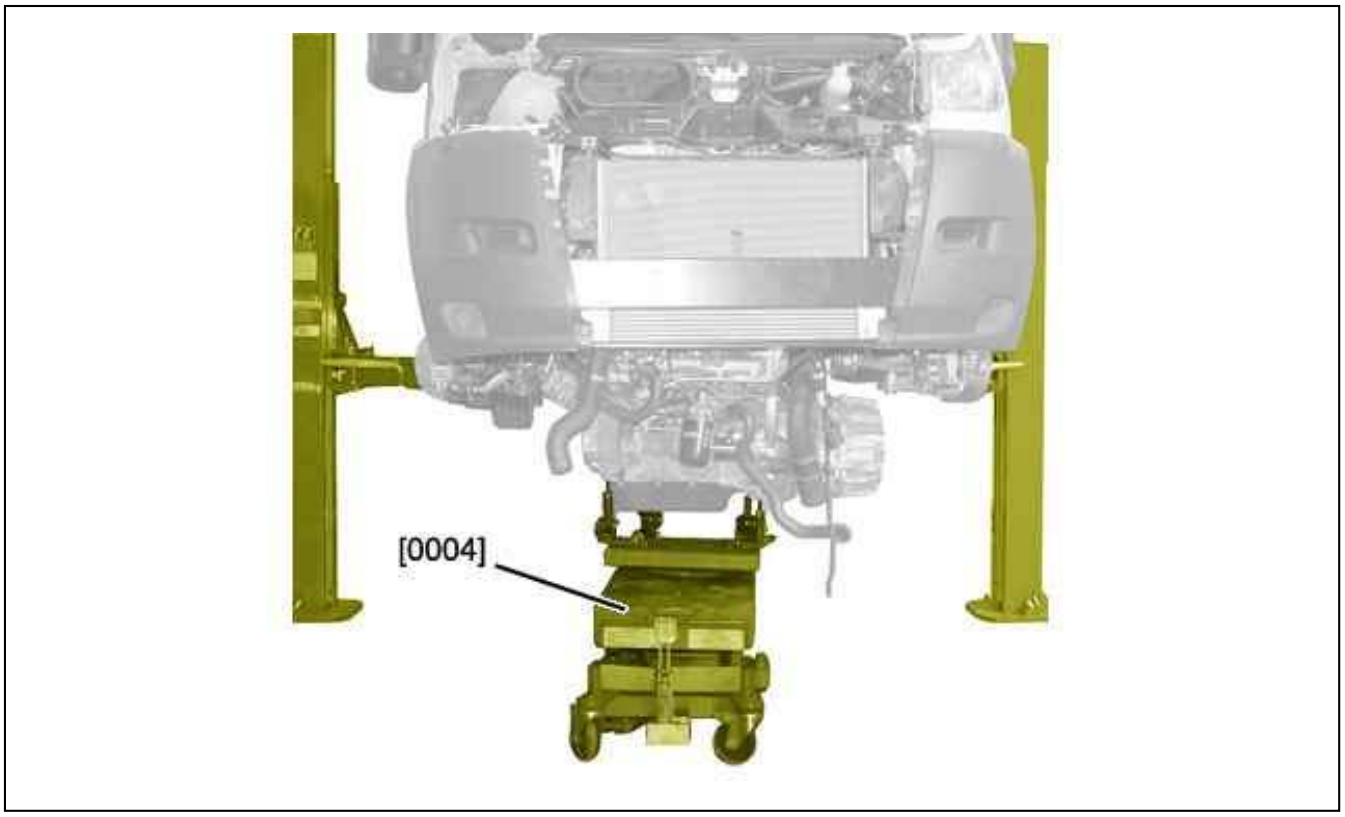

Figure : B1BG2CXD

CAUTION : Ensure that there is no fouling between the engine-gearbox assembly and the body.

Slowly lower the engine and gearbox assembly ; Using the lifting table [0004].
Manoevre the engine-gearbox assembly to facilitate removal.
Remove the power unit assembly (from below).
Move the engine-gearbox assembly away from under the vehicle.

3. Refitting

CAUTION : Adhere to the tightening torques.

Tightening torques : Transmission .
Tightening torques :

- Exhaust system
- Manual gearbox
- engine
- Engine/gearbox mountings

Place the engine/gearbox assembly on the hydraulic table [0004].

CAUTION : Ensure that there is no fouling between the engine-gearbox assembly and the body. Manoevre the engine-gearbox assembly to facilitate its repositioning.

Position the engine-gearbox set ; Using tool [0004] (from underneath the vehicle).
Refit :

- The engine mounting (26)
- The earth braid (29)
- The engine mounting (27)

- The engine mounting (24)
- The bolts (32), (25), (30)
- The nuts (23), (31), (28)

Unclamp the power unit assembly from the lifting table [0004].
Withdraw the lifting bench [0004] from under the vehicle.
Remove the tools [0005-C], [0005-G].
Refit :

- The reaction link (18)
- The (22) bolt
- The bracket (20) (Reaction rod (18))
- The bolts (19)
- The bolt (21)

Refit :

- The air-conditioning compressor (According to equipment)
- The power steering pump

Position and couple up :

- The gear control and selection cables
- The starter electrical supply (at "c")
- The hydraulic clutch control (17)

Reconnect the electrical harnesses (16).
Position : The fuse box (at "b").
Refit : The cover of the fuse holder unit .
Refit : The heater matrix inlet and outlet hoses (14), (15).
Reconnect the air flowmeter (at "a").
Remove the tool [0188-T] (Brake servo pipe (8)).
Refit :

- The radiator top hose (13)
- The expansion bottle pipe (12)
- The air duct (7)
- The air filter housing (11)
- The cover (10)
- The clips (Electrical harness (9))
- The braking assistance pipe (8)

Couple up : The fuel supply and return pipes (5), (6).
Refit : The air take-off (4).
Position : The scuttle (3).
Remove the tools [0188-T] (Fuel supply and return pipes (5), (6)).
Couple up :

- The turbocharger air outlet pipe (2)
- The turbocharging air cooler air outlet hose (1))

Refit :

- The pre-catalytic converter
- The drive shafts
- The front wheels
- The right-hand headlamp
- The central section of the lower front panel
- The protection plates under the engine

Fill and top up the level of the following of the following elements :

- engine
- Gearbox
- Cooling system

CAUTION : Perform the operations to be carried out following reconnection of the battery.

Reconnect the battery.
Switch on the ignition 10 times in succession over a period of 5 seconds, without starting the engine, this to prime the fuel circuit.
Start the engine.
Top up the coolant level (if necessary).
Return the vehicle to its wheels.
Carry out :

- A road test
- A reading of the diagnostic memories

GENERAL SPECIFICATIONS : CLUTCH

1. Application

engine	gearbox	Engine flywheel
PUMA 100 (4HV)	MLGU5	With single engine flywheel
PUMA 120 (4HU)	MLGU6	With double engine flywheel

2. Data

	Clutch mechanism		Clutch friction plate			Stop
engine	make	Type	External diameter	Internal diameter	Lining	make
PUMA 100 (4HV)	LUK	240 P 6700	239 mm	155 mm	810 DS	SKF
PUMA 120 (4HU)	LUK	255 P 8100	254 mm	165 mm	810 DS	SKF

3. Special features

LUK clutch discs do not have damper hubs.
The noise generated by the gearbox is filtered by the double damping flywheel (DVA) and not by the clutch disc hub.
On the MLGU6 gearbox The LUK clutch mechanism includes an automatic wear adjustment device that requires a special tool for refitting.

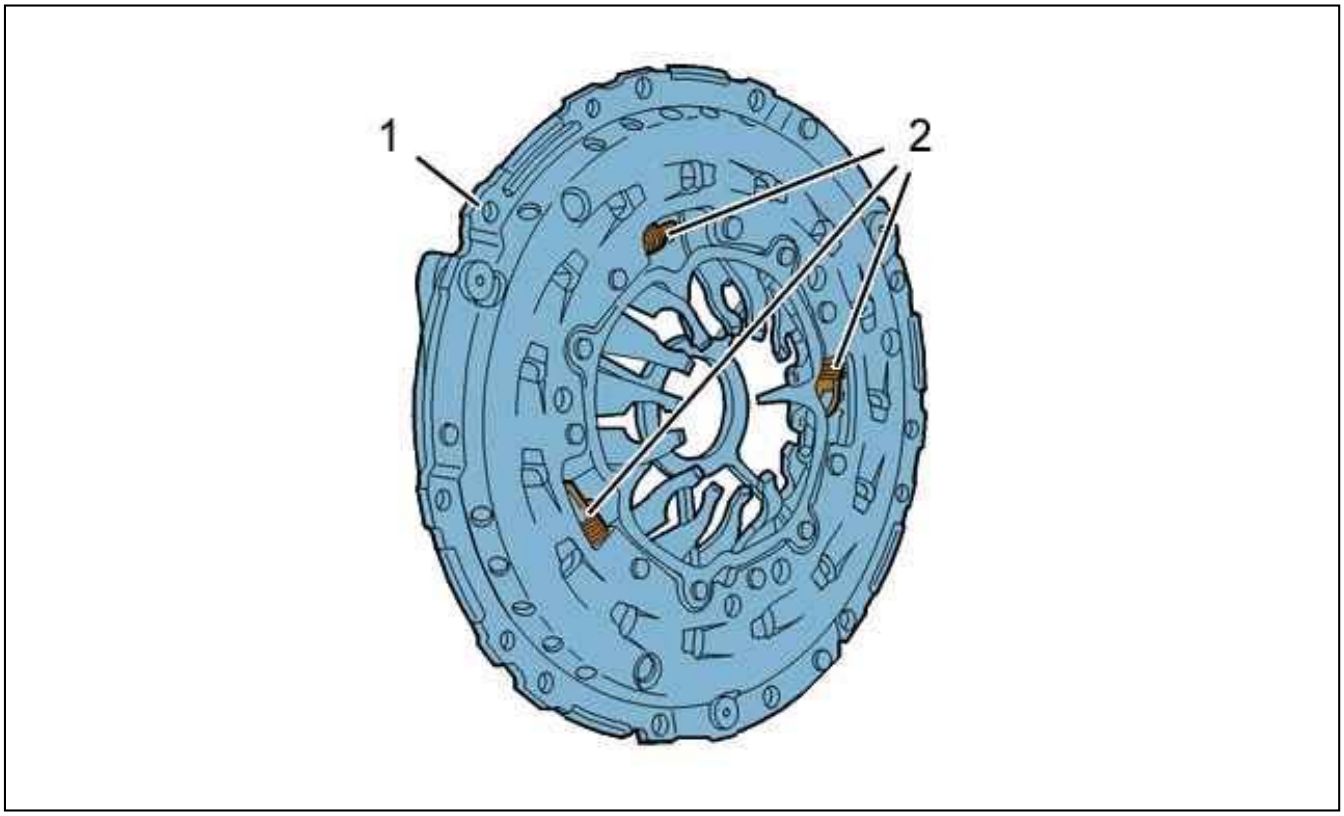

Figure : B2BP2PYD

(1) Automatic play adjustment mechanism.

(2) Compensation springs.

N.B. : When refitting, place the face of the clutch disc, where the N° PSA 96 XXX XXX 80 is marked, gearbox end.

TIGHTENING TORQUE : CLUTCH

1. Clutch mechanism

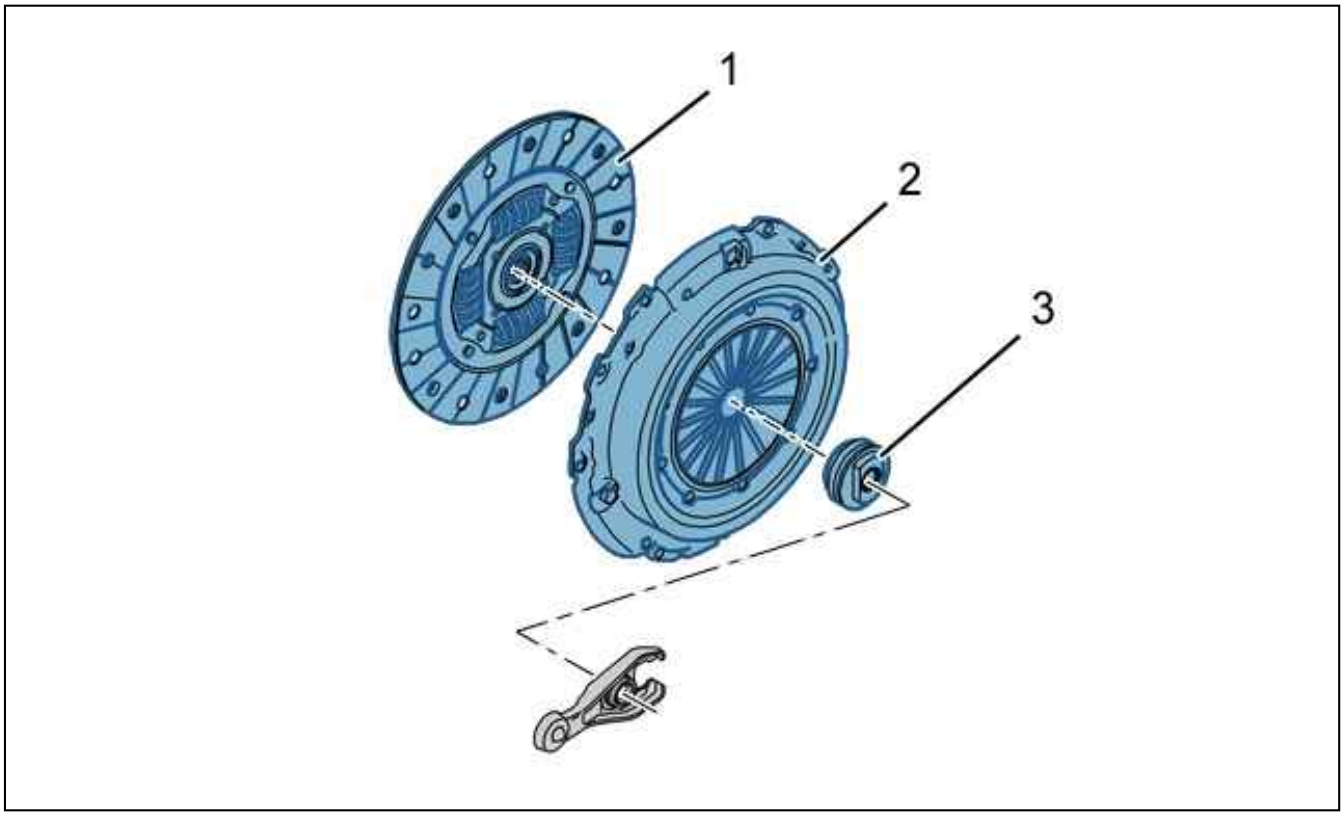

Figure : B2BP2PZD

(1) Clutch friction plate.
(2) Clutch mechanism.
(3) clutch release bearing.
Mounting of the clutch pressure plate on the flywheel : Tightening torque to 2 da.Nm.

2. Engine flywheel

N.B. : Tighten the screws "crosswise".

2.1. With single engine flywheel : MLGU5 gearbox

Tightening torque :

- Pre-tightening to 2,5 daNm
- Tighten to 4 daN.m

2.2. With double engine flywheel : MLGU6 gearbox

Tightening torque :

- Pre-tightening to 1,5 daNm
- Tighten to 4 daN.m

2.3. For the SOFIM 2.3 L engine

Tightening torque :

- Mounting of the clutch pressure plate on the flywheel : Tightening torque to 2,7 da.Nm
- Flywheel bolts
- Pre-tightening to 3 daNm
- Tighten to 90 °

IDENTIFICATION - DATA : CLUTCH

1. Application

engine	gearbox	Engine flywheel
PUMA 100(4HV)	MLGU5	With single engine flywheel
PUMA 120(4HU)	MLGU6	With double engine flywheel
Sofim 3.0(F1C)	M40	With double engine flywheel

2. Data

	Clutch mechanism		Clutch friction plate			clutch release bearing
engine	make	Type	External diameter	Internal diameter	Lining	make
PUMA 100(4HV)	LUK	240 P 6700	239 mm	155 mm	810 DS	SKF
PUMA 120(4HU)	LUK	255 P 8100	254 mm	165 mm	810 DS	SKF
SOFIM 3.0(F1C)	LUK	270 P	269 mm	161 mm	810DS	SKF

3. Special features

LUK clutch discs do not have damper hubs.
The noise generated by the gearbox is filtered by the double damping flywheel (DVA) and not by the clutch disc hub.
Gearboxes MLGU6, M40 : The LUK clutch mechanism includes an automatic wear adjustment device that requires a special tool for refitting.

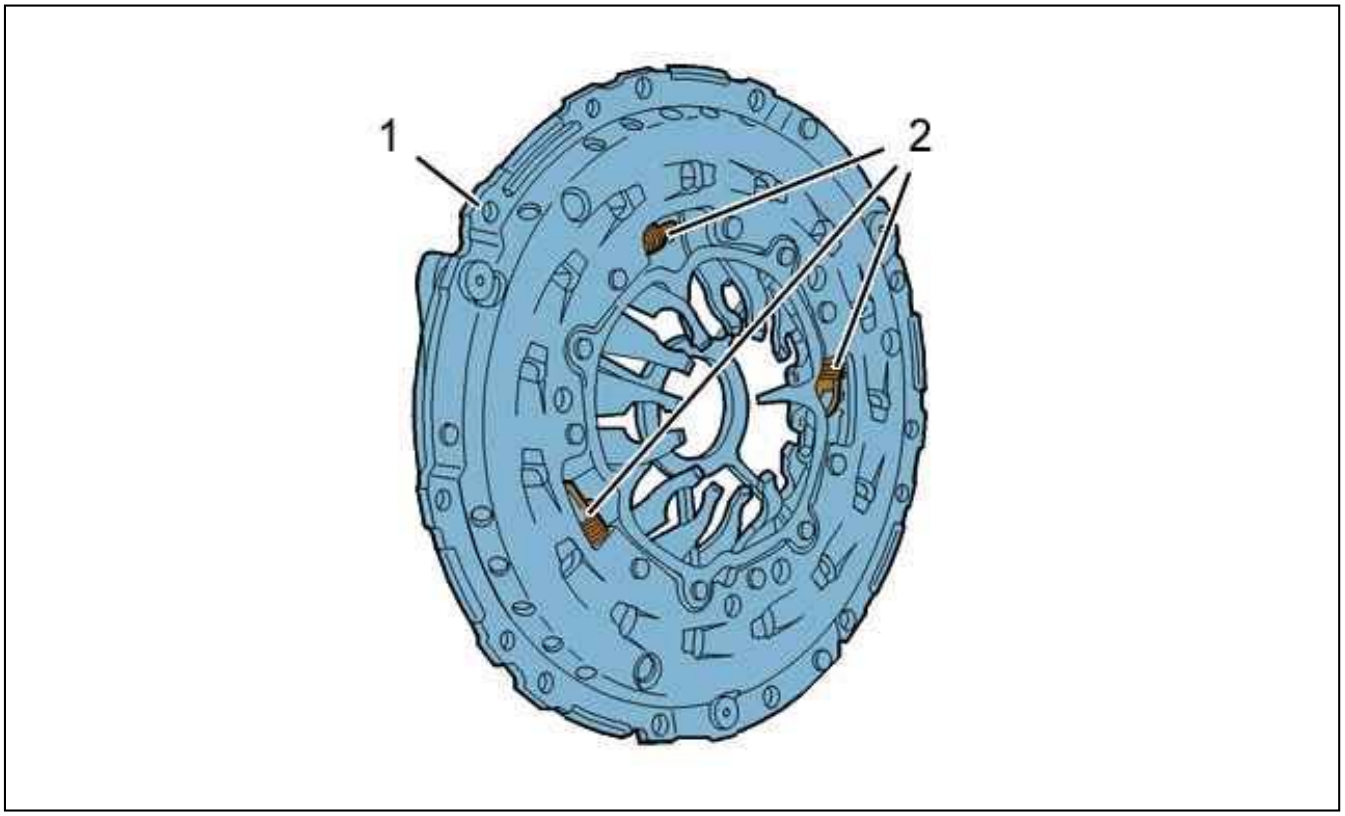

Figure : B2BP2PYD

(1)Automatic play adjustment mechanism.
(2)Compensation springs.

REMOVING - REFITTING : CLUTCH MECHANISM

ESSENTIAL : Observe the safety and cleanliness instructions .

CAUTION : In order to improve the centering of the friction plate and to eliminate engine jerks, vibrations and noise compress the clutch mechanism when tightening the fixing bolts ; Using tool [0217].

CAUTION : Always replace the clutch bearing when replacing the clutch mechanism or the clutch disc.

1. Tooling

Tool	Reference	Description
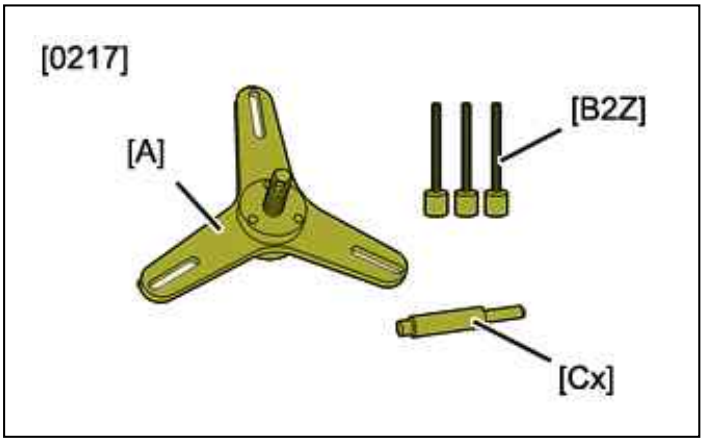 Figure : E5AG04PT	[0217]	Clutch mechanism compression tool
	[0217-A]	Clutch mechanism compressor
	[0217-B2Z]	Retaining rod (Ø 8 mm)
	[0217-Cx]	Clutch centring drift (According to gearbox (see table below))

Clutch centring drift							
Engine types	[0217-C1]	[0217-C2]	[0217-C3Z]	[0217-C4]	[0217-C5Z]	[0217-C6Z]	[0217-C7]
DV4		BE	MA/MAP				
DV4 C						MA/MAP	
DV6	MCM	BE	MCP				
DV6UC			BE				
DV6DU (M)			BE				
DV6C (M)			MCP/ML		MCP/MCM	BE	
DV6D (M)			BE/MCP		MCP		
DV6E (M)			BE				
DW10	ML/BE		MCP		MCP		
DW12	ML						W6MBA
4B12							W5MBA
EB0			MA				
EB2			MA/MAP				
EB2M			MA/MAP				

EC5			MA			BE	
EP3 - EP3C			BE/MA/MAP				
EP6 - EP6C (M)			BE/MA/MCM/ MCP				
EP6CDTR					MCM		
EP6DTS					MCM		
EP6CDT			MCP		MCM/MCP		
EP6CDTX					MCM		
ES9				ML			
ET3			MA/MAP				
EW10						BE/MCP	
EW12						BE	
EW6						BE	
EW7						BE	
TU1			MA				
TU3			MA/MAP				
TU5			MA/MAP			BE	
SOFIM	MLGU5			M40			
PUMA	MLGU5/MLGU6						
1,3 DTE					MTM/MTA		

2. Removing

Remove the gearbox.

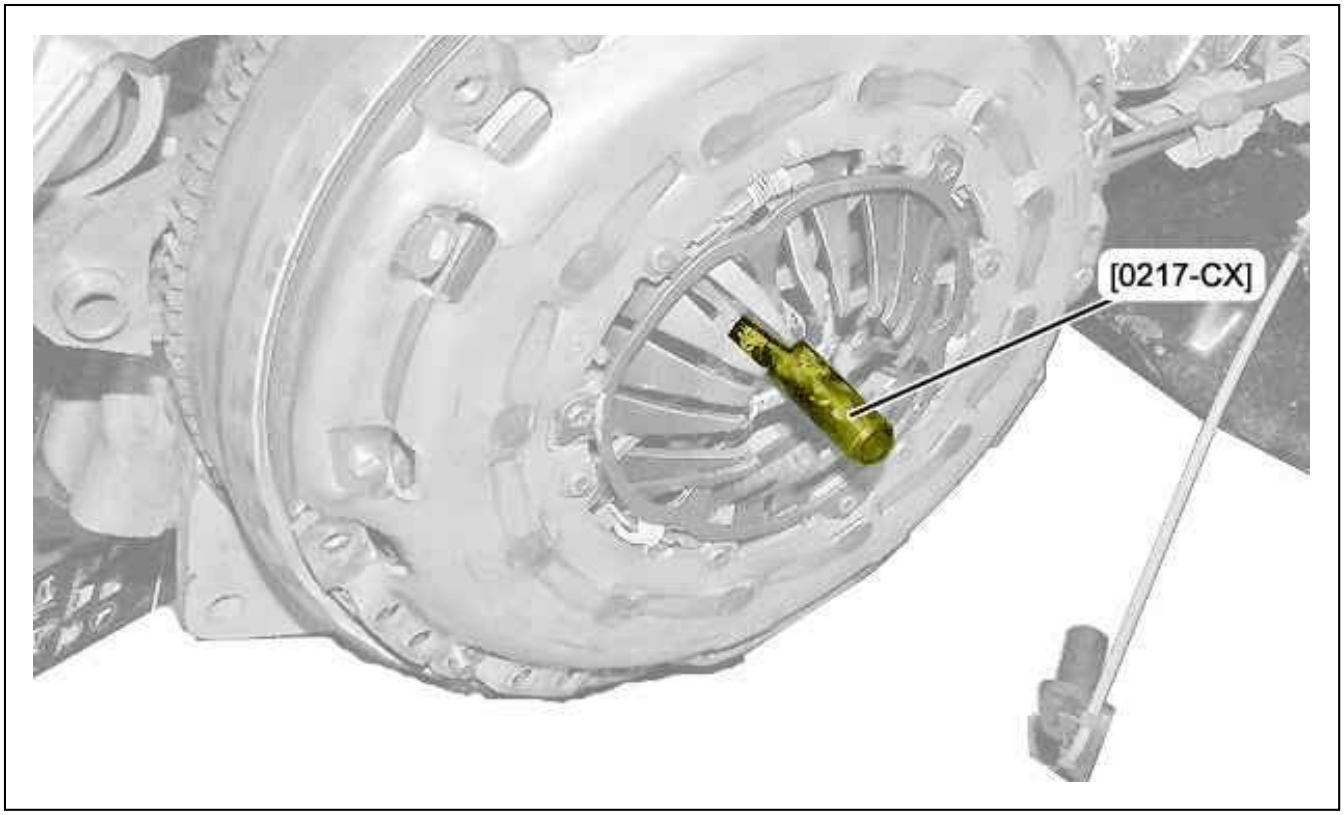

Figure : B2BG01DD

Fit the tool [0217-CX].

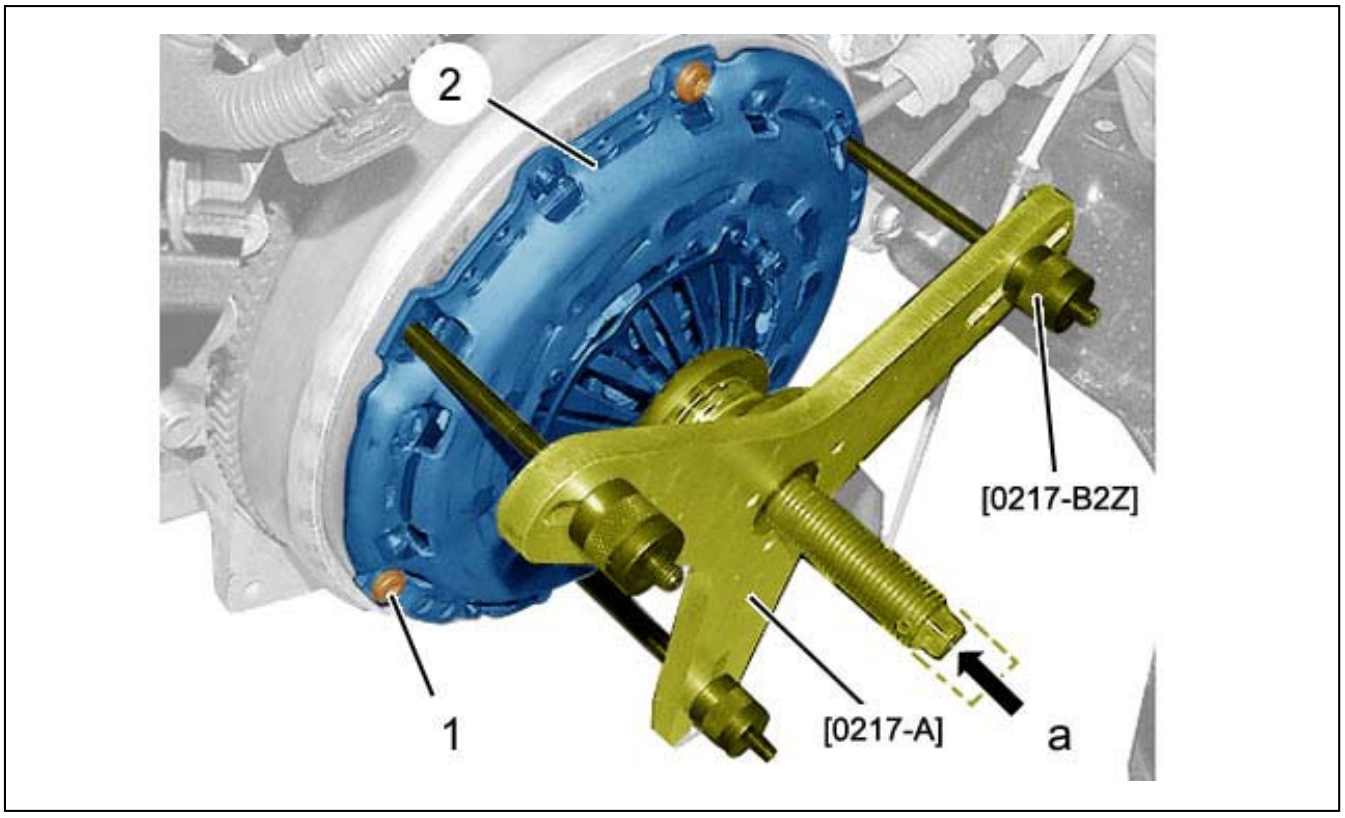

Figure : B2BG08ED

Remove the 3 bolts (1) (Every second bolt).
Position the tools [0217-A] and [0217-B2Z] on the clutch mechanism (2).

CAUTION : Certains volants moteurs comportent des taraudages débouchants. Ne pas faire dépasser les filetages des 3 tiges de maintien lors du vissage; Risque de déformation du volant moteur secondaire.

Screw in the 3 retaining rods [0217-B2Z] in place of the fixing screws (1) ; Ne pas faire dépasser les filetages.

CAUTION : Lors de la compression du mécanisme d'embrayage ; Ne pas franchir de point dur lors du serrage de la vis centrale de l'outil [0217-A]. Le serrage ne doit pas excéder 10 tours dans le sens horaire.

Compress the clutch mechanism (2) with the central bolt of tool [0217-A] (at "a").
Finish removing the remaining bolts (1).
Release the clutch mechanism (2) by moving the central bolt of the tool [0217-A] (at "a").
Remove tools [0217-A] and [0217-B2Z].
Remove :

- The clutch mechanism (2)
- The clutch disc

3. Preparation for removal

3.1. Checking - Cleaning

Visually check :

- The flywheel face for damage or scores
- The flywheel for wear
- The condition of the starter ring gear
- The clutch mechanism (2)

If there is oil in the clutch mechanism (2) :

- Contrôler l'état de la bague d'étanchéité du vilebrequin
- Contrôler l'état de la bague d'étanchéité de l'arbre primaire

CAUTION : Ne pas réutiliser un disque d'embrayage dont le moyeu a des traces d'oxydation ou traces de graisse.

Désoxyder et dégraisser les pièces suivantes ; Using a degreaser Index "N1" :

- The clutch housing
- The primary shaft
- The clutch bearing guide (according to equipment)
- The clutch fork (according to equipment)

N.B. : En cas de corrosion importante, utiliser une brosse métallique sans détériorer les pièces.

3.2. Greasing

CAUTION : Respecter rigoureusement l'étape du graissage.

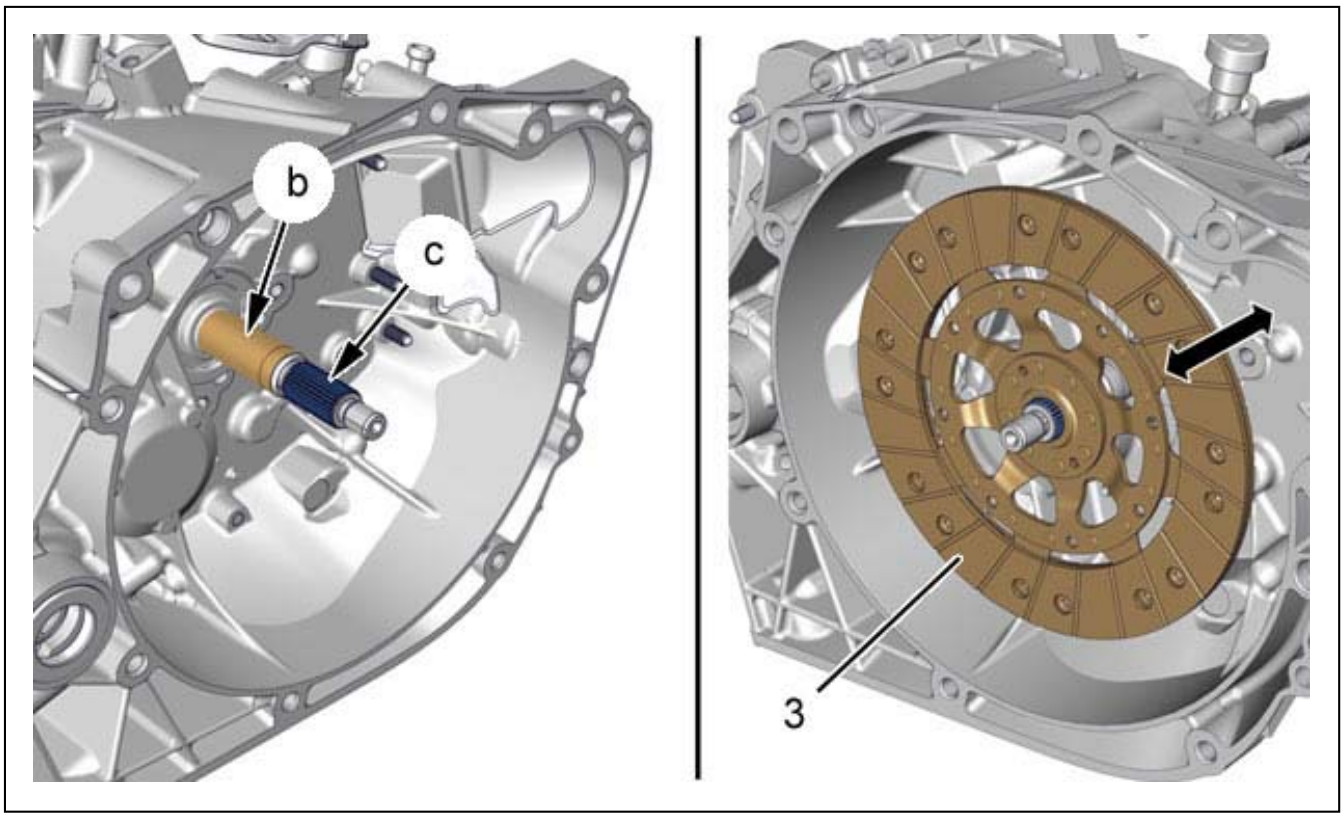

Figure : B2BG08FD

CAUTION : Protect the interior of the clutch housing from splashes of grease.

Vehicles equipped with a gearbox that has a mechanical clutch bearing Spray a little grease MOLYCOTE G-RAPID PLUS (aerosol) on the splines of the primary shaft and on the clutch bearing guide tube (at "b" and "c").
Vehicles equipped with a gearbox that has a hydraulic clutch bearing : Grease the splines of the primary shaft with MOLYCOTE G-RAPID PLUS (at "c").

CAUTION : Ne pas souiller la garniture du disque d'embrayage ; Risque de patinage.

Mettre en place le disque d’embrayage (3) sur l’arbre cannelé et effectuer plusieurs translations pour répartir la graisse.
Déposer le disque d’embrayage .

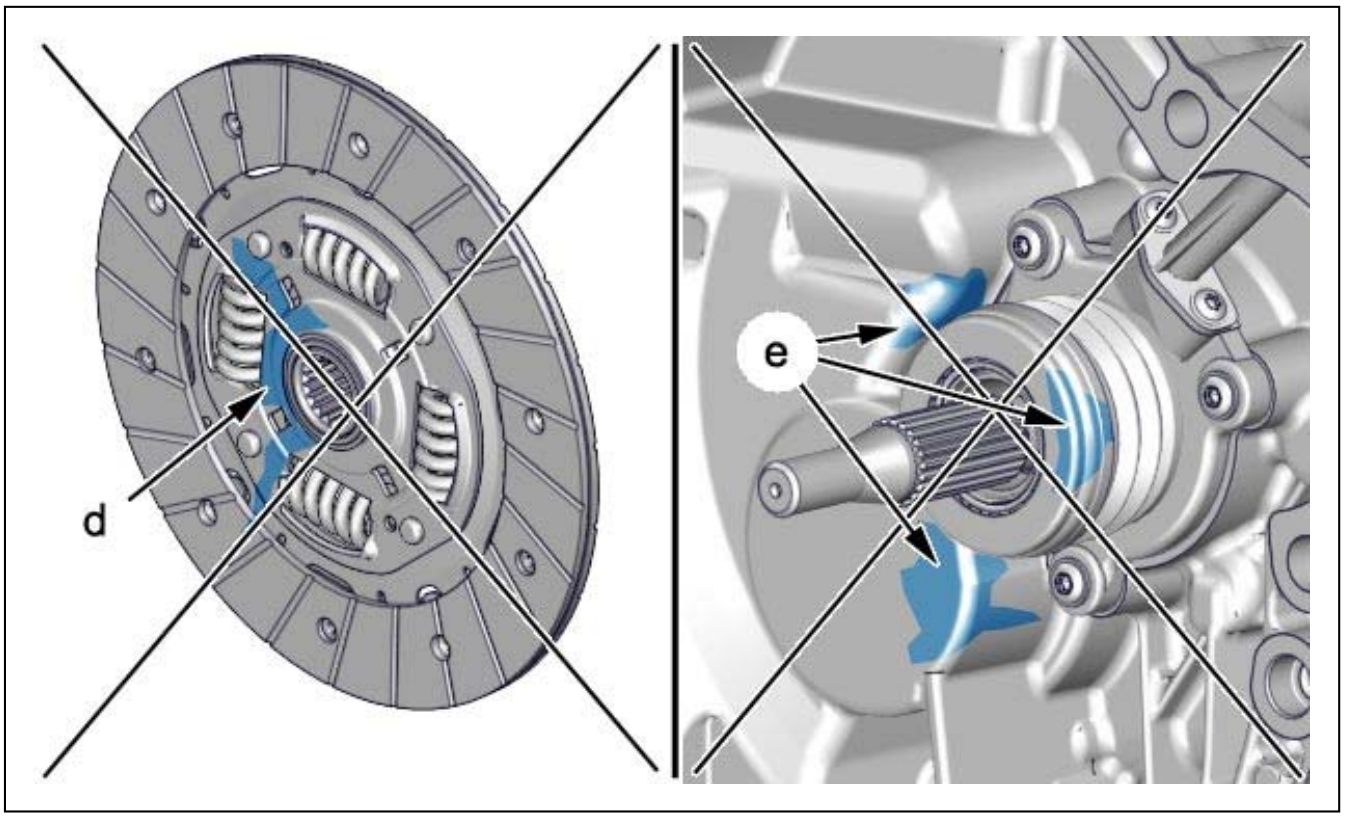

Figure : B2BG08GD

CAUTION : An excess of grease will contaminate the clutch friction plate and cause noise in neutral, slipping or juddering of the clutch.

"d" : Traces de graisse présentes sur un disque d’embrayage pollué suite à un surplus de graisse.
"e" : Traces de graisse présentes sur un carter d’embrayage pollué suite à un surplus de graisse.

CAUTION : Nettoyer toute trace de graisse susceptible d’être projetée sur la friction en rotation.

Remove the surplus grease on the top of the grooves and the end of the input shaft using a cloth.

N.B. : La pellicule de graisse déposée sur les éléments en rotation doit être la plus fine possible afin d’éviter les projections.

4. Refitting

CAUTION : Observe the tightening torque values.

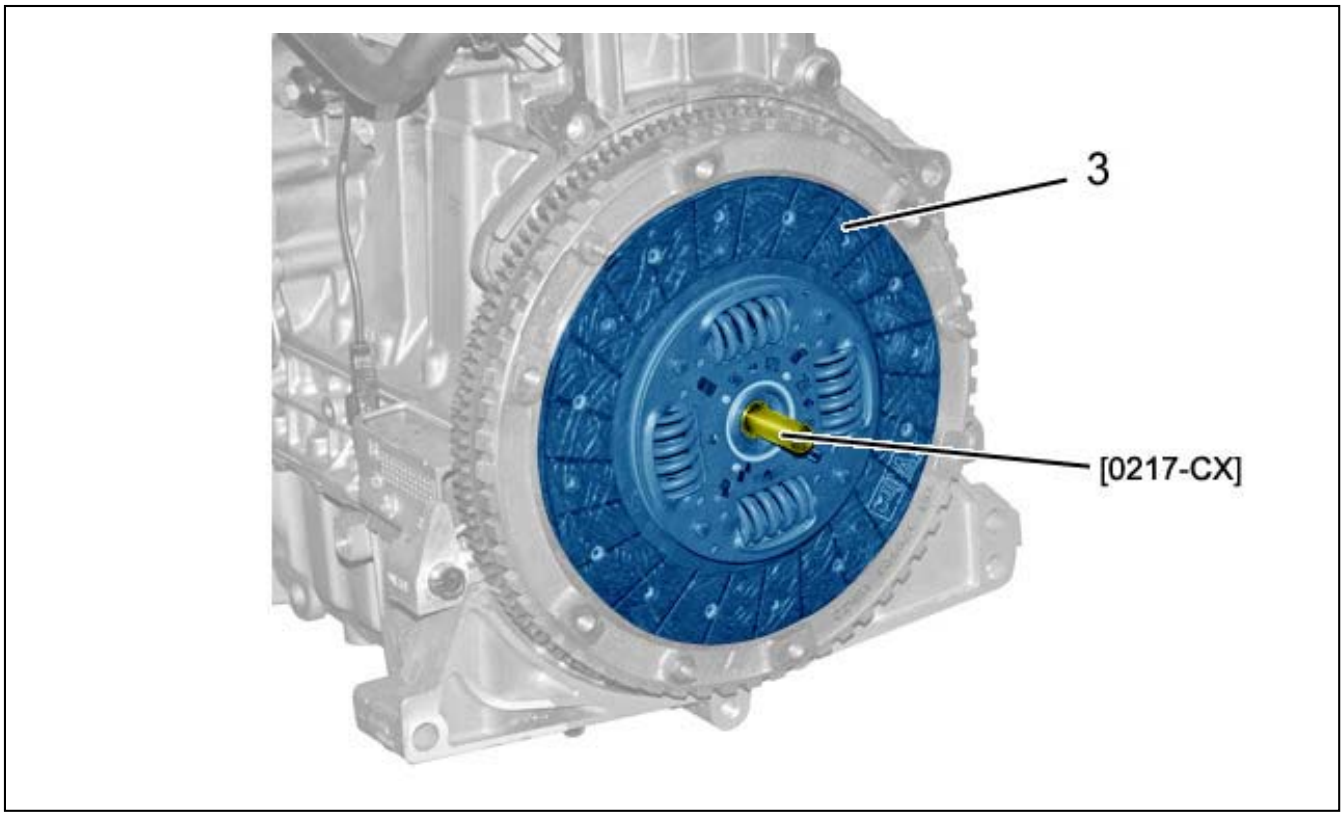

Figure : B2BG08HD

CAUTION : When refitting, place the face of the clutch disc, where the N° PSA 96 XXX XXX 80 is marked, gearbox end.

Refit the clutch disc (3).
Centre the clutch disc (3) ; Using tool [0217-CX].



Figure : B2BM01JD

CAUTION : The clutch mechanism and disc are paired at the factory and cannot be replaced separately.

CAUTION : Any fitting of a clutch mechanism with automatic free play adjustment (whether new or re-used) mus compulsorily be performed using the compression tool [0217].

Refit the clutch mechanism (2).

N.B. : Do not remove the tool [0217-CX].

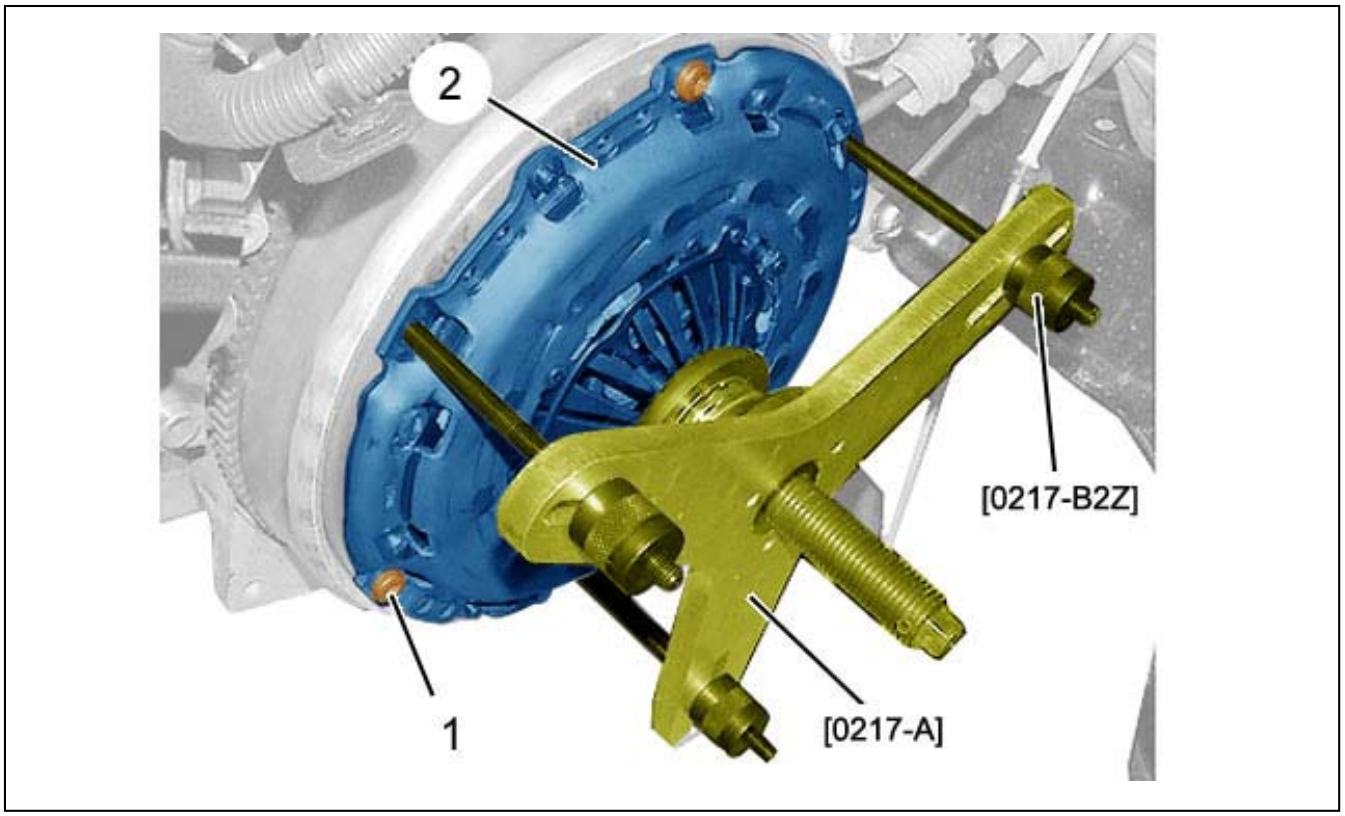

Figure : B2BG08ID

CAUTION : No resetting of the clutch wear adjustment is permitted.

Position the tools [0217-A] and [0217-B2Z] on the clutch mechanism (2).
Screw in the 3 retaining rods [0217-B2Z] in place of the fixing screws (1) ; Ne pas faire dépasser les filetages.
Tighten the 3 bolts (1) by hand.

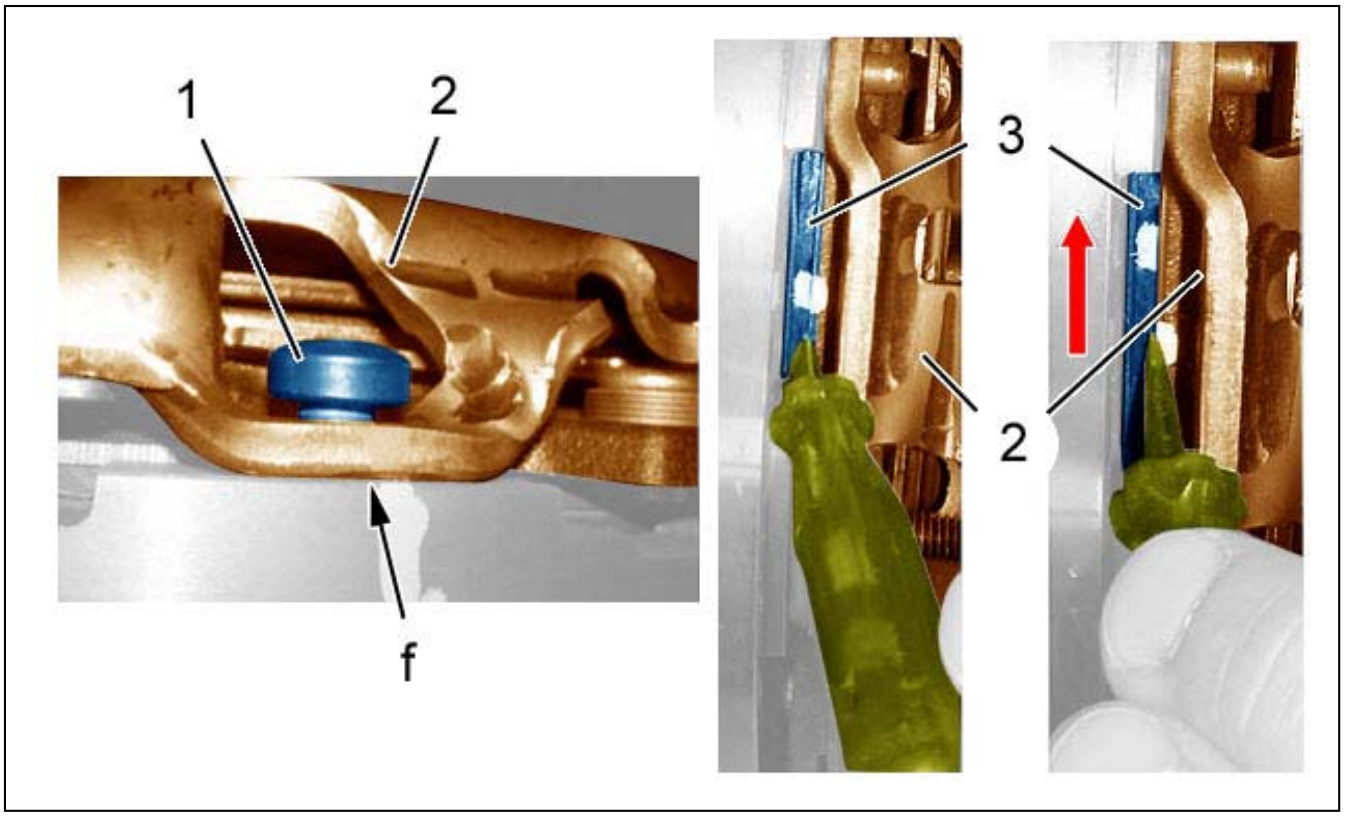

Figure : B2BG08JD

Comprimer progressivement le mécanisme d'embrayage (2) jusqu'au contact sur le volant moteur primaire (at "f").
Contrôler l'absence de friction :

- Appliquer un léger effort sur le disque d'embrayage (3) pour contrôler la rotation ; Using a thin, flat screwdriver
- En cas de rotation difficile ou impossible, poursuivre l'opération de compression du mécanisme d'embrayage très progressivement jusqu'à la rotation (1/8 ème de tour sur la vis de l'outil [0217-B2Z])

En cas d'impossibilité de contrôler l'absence de friction (disque d'embrayage inaccessible), visser la vis centrale de l'ou [0217-B2Z] de deux tours supplémentaires au maximum.
Tighten the 3 bolts (1) to the specified torque.
Unscrew the centre bolt of the tool [0217-A] (at "a") by several turns to detension the clutch mechanism (2).
Remove tools [0217-A], [0217-B2Z] and [0217-CX].
Refit and tighten the remaining 3 bolts (1).
Refit the gearbox.

REMOVING - REFITTING : HYDRAULIC CLUTCH CONTROL

ESSENTIAL : Observe the safety and cleanliness recommendations .

1. Preliminary operations

Remove the air filter and air inlet duct assembly.

CAUTION : Mark the level of brake fluid in the reservoir before carrying out the operation.

Remove the brake fluid reservoir cap .

1.1. Assembly with hydraulic clutch control slave cylinder

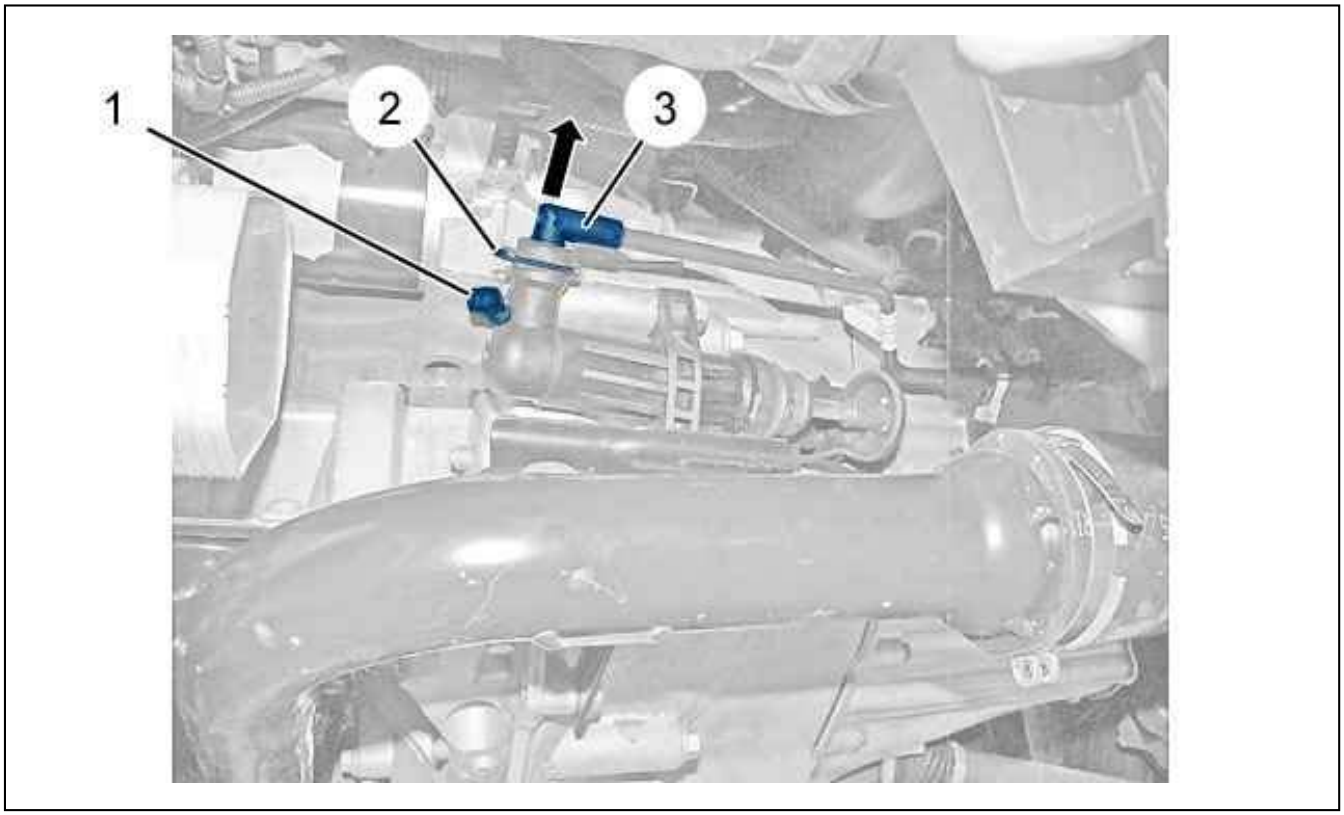

Figure : B2BI00JD

CAUTION : The end of the transparent pipe must be submerged into the brake fluid.

Drain the hydraulic clutch control circuit :

- Couple a transparent pipe onto the bleed valve (1)
- Plunge the end of the transparent pipe into a receptacle containing brake fluid, placed lower down than the hydraulic clutch control slave cylinder
- Press the locking clip (2)
- Pull the clip (3) by one notch in the direction of the arrow (open position)

1.2. Fitting with hydraulic stop

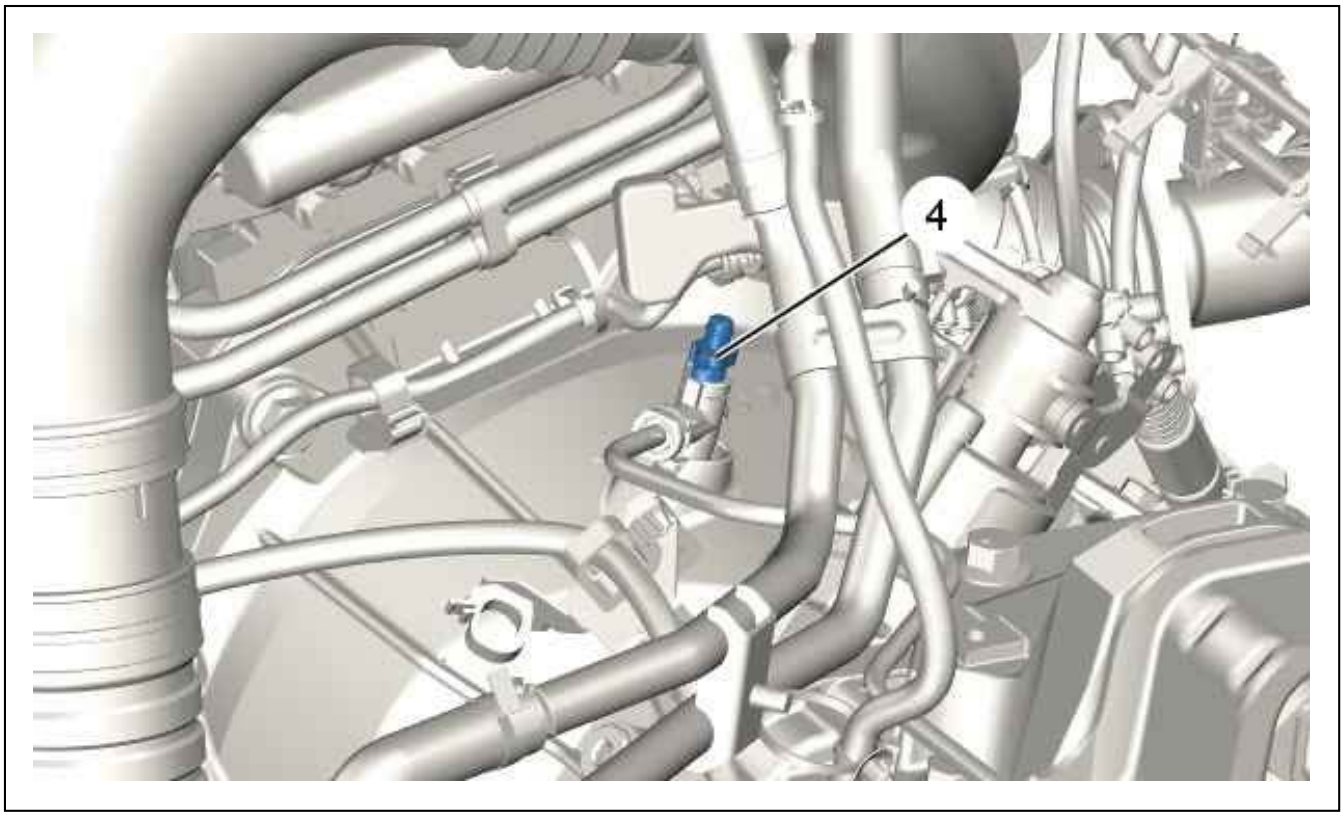

Figure : B2BG046D

Couple a transparent pipe onto the bleed valve (4).

CAUTION : The end of the transparent pipe must be submerged into the brake fluid.

Plunge the end of the transparent pipe into a receptacle containing brake fluid, placed lower down than the hydraulic clutch control circuit bleed.
Open the bleed valve (4).
Action the clutch pedal manually to drain the hydraulic clutch control circuit.
Close the bleed valve (4).
Uncouple the transparent pipe from the bleed valve (4).

2. Removing

Remove :

- The cover under the steering wheel
- The floor carpet

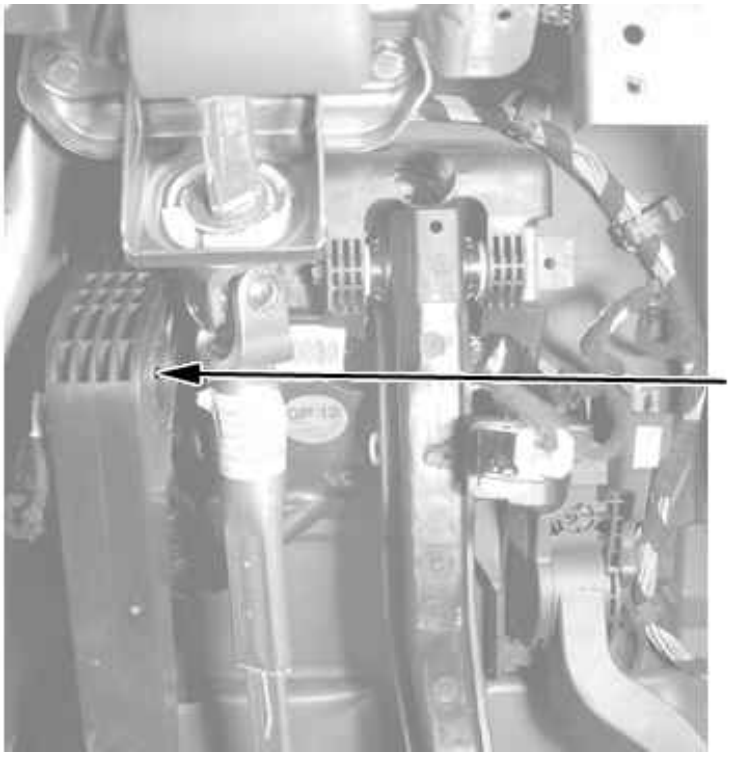

Figure : B3FB06UD

First assembly :

- Turn the pin (5) a quarter turn anticlockwise
- Remove the shaft (5)

Second assembly :

- Remove circlip
- Remove the shaft (5)

Detach the hydraulic clutch control master cylinder thrust rod from the clutch pedal.

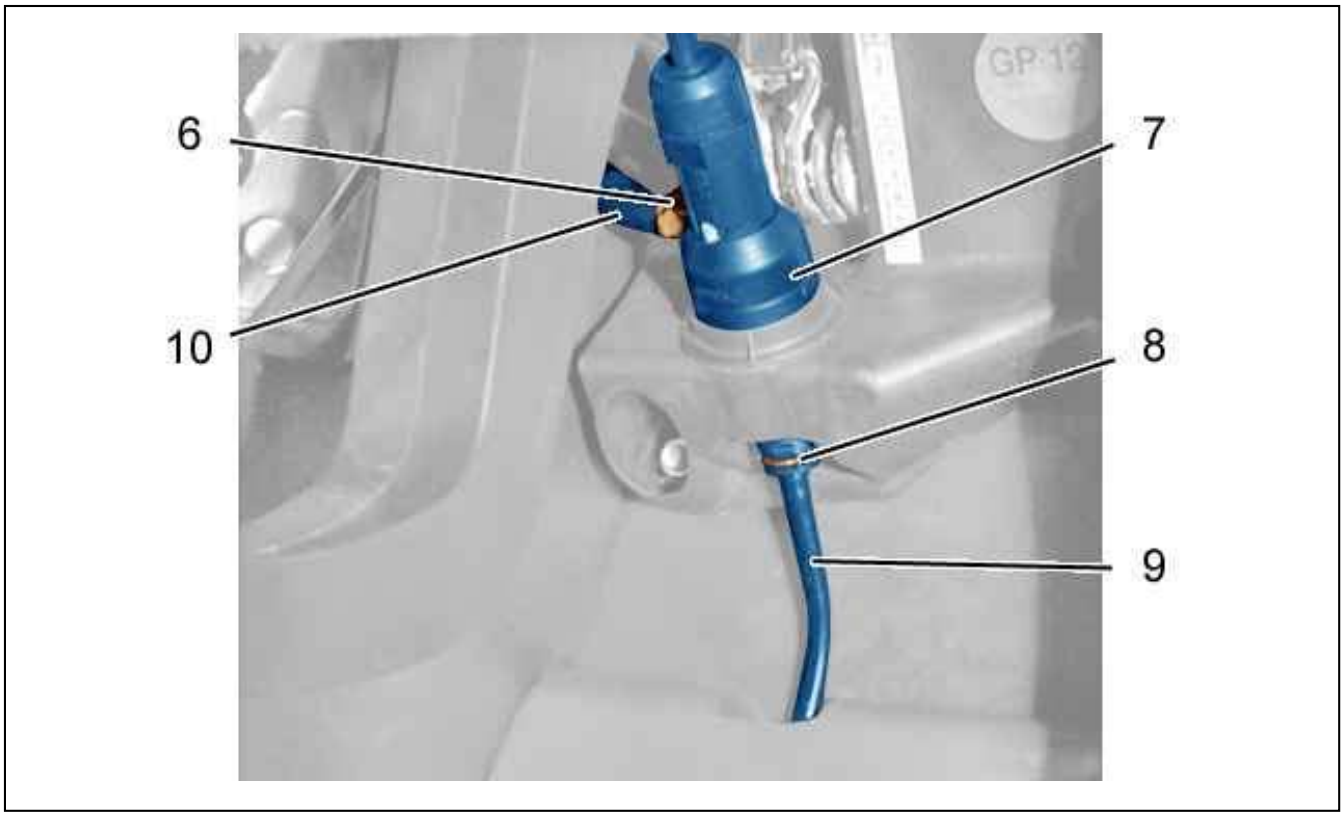

Figure : B2BG06ND

Uncouple :

- The clip (6)
- The supply pipe (10) of the hydraulic clutch control master cylinder (7)

N.B. : Plug the supply pipe (10) of the hydraulic clutch control master cylinder (7).

Remove the clip (8).
Uncouple the hydraulic clutch control pipe (9).

N.B. : Plug the hydraulic clutch control master pipe (9).

Remove the hydraulic clutch control master cylinder (7) (turn a quarter turn anticlockwise).

2.1. Assembly with hydraulic clutch control slave cylinder

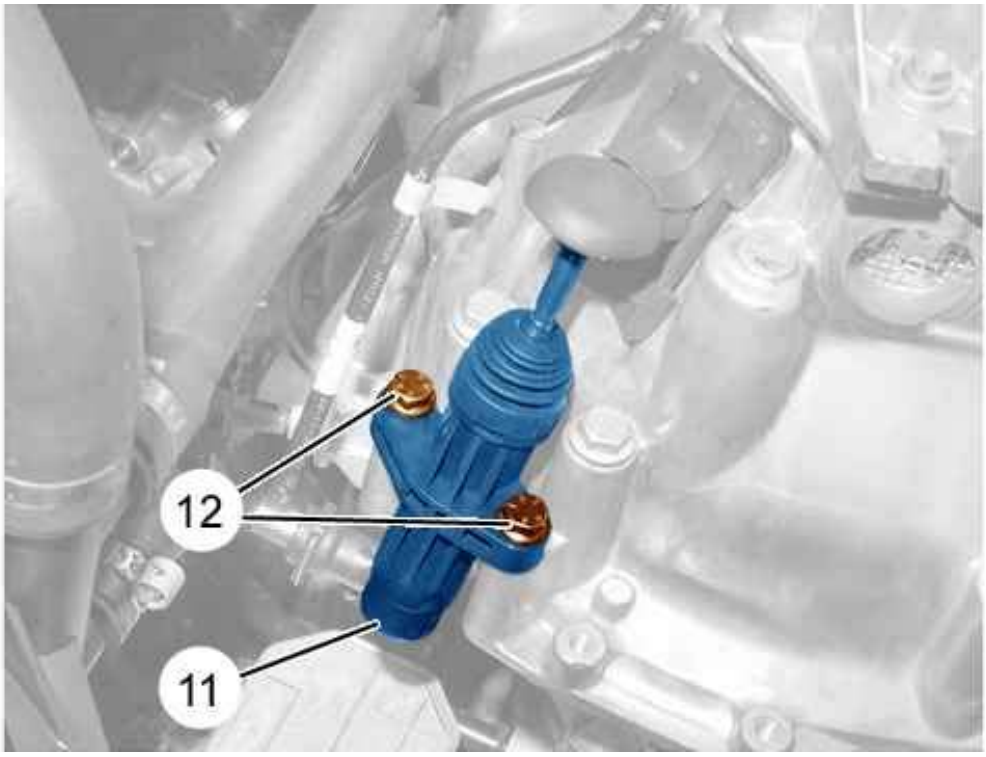

Figure : B2BG047D

Remove :

- The 2 bolts (12)
- The hydraulic clutch control slave cylinder (11)

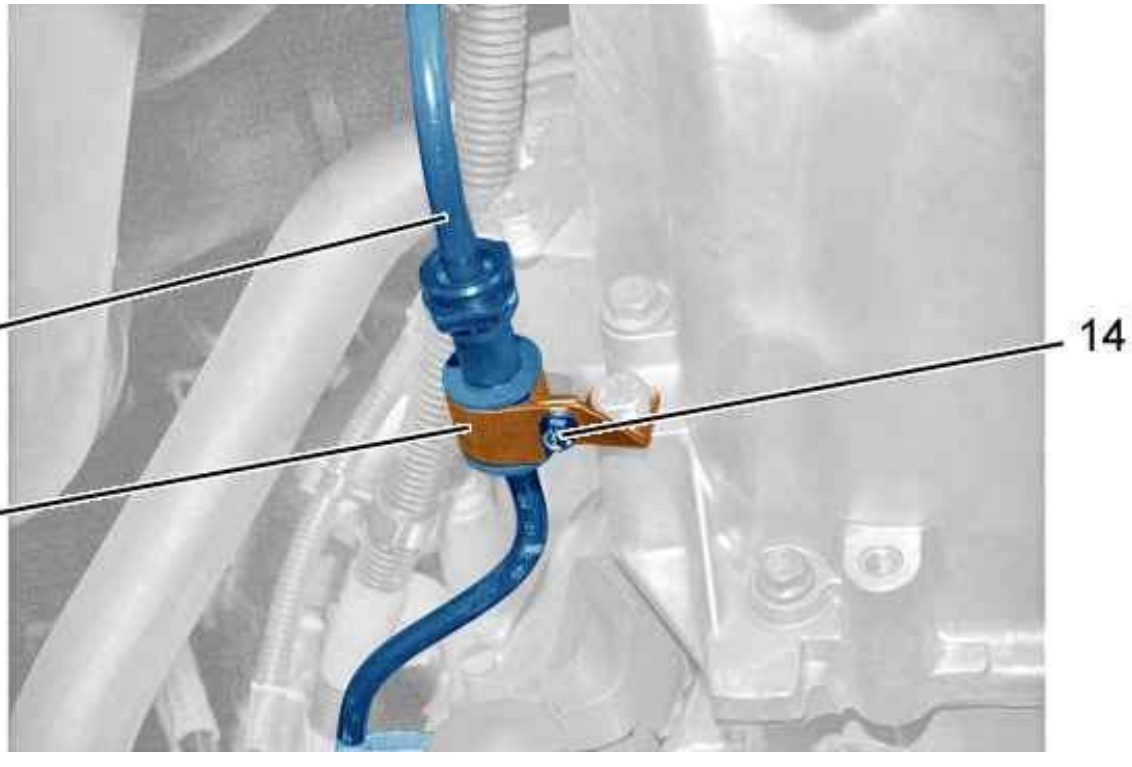

Figure : B2BG06OD

Remove the bolt (14).
Move the mounting (15) aside.
Remove the pipe (13).

2.2. Fitting with hydraulic stop

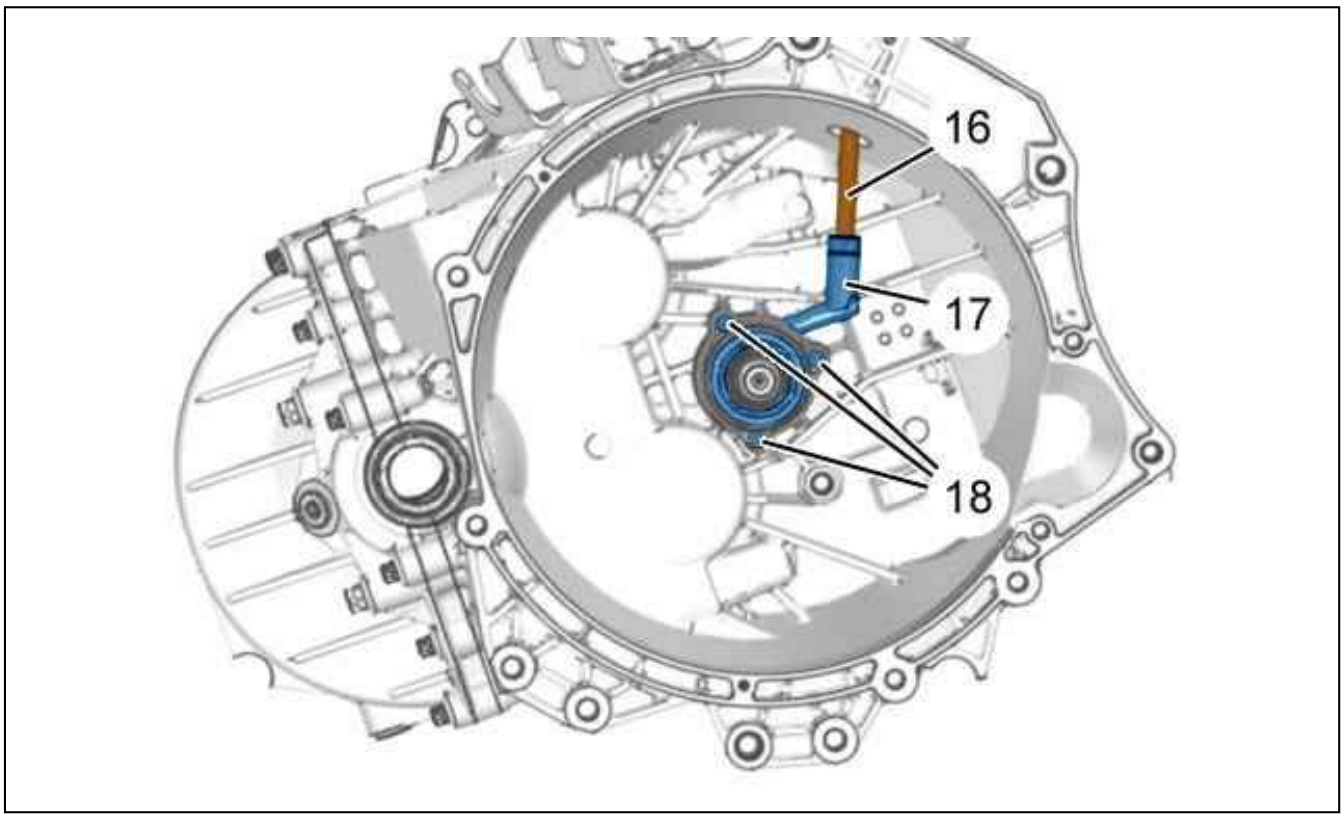

Figure : B2BG06PD

Remove :

- The pipe (16)
- The bolts (18)
- The hydraulic stop (17)

3. Refitting

Grease (according to assembly) :

- The master cylinder rod ball joint With grease ESSO NORVA 275
- The slave cylinder rod end piece With grease MOLYKOTE BR2 PLUS

3.1. Assembly with hydraulic clutch control slave cylinder

Pass the pipe (13) into the support (15).
Reclose the support (15).
Refit :

- The (14) bolt
- The pipe (13)

Close all of the clips retaining the pipe (13).
Refit :

- The hydraulic clutch control slave cylinder (11)
- The 2 bolts (12)

Push back the clip (3).
Pull on the locking clip (2).

3.2. Fitting with hydraulic stop

Refit :

- The pipe (16)
- The hydraulic stop (17)
- The bolts (18)

3.3. Subsequent operations

Refit the hydraulic clutch control master cylinder (7) (Rotate a quarter turn clockwise).
Couple up :

- The supply pipe (10) on the hydraulic clutch control master cylinder (7)
- The clip (6)
- The hydraulic clutch control pipe (9)

Refit the clip (8).
Connect the hydraulic clutch control master cylinder thrust rod to the clutch pedal.
First assembly :

- Refit the pin (5)
- Lock the pin (5) a quarter turn clockwise

Second assembly :

- Refit the pin (5)
- Clip and reconnect the connector

Refit :

- The cover under the steering wheel
- The floor carpet

4. Additional operations

Fill the brake fluid reservoir to its maximum capacity.
Bleed the hydraulic clutch control circuit (see the relevant operation).
Bring the brake fluid level to the level marked previously.
Refit the fluid reservoir cap.
Refit the air filter and air inlet duct assembly.

BLEEDING : HYDRAULIC CLUTCH CONTROL

ESSENTIAL : Observe the safety and cleanliness recommendations .

ESSENTIAL : During the bleed operations, take care to maintain the level of brake fluid in the reservoir by topping it up (if necessary). Use new brake fluid only.

CAUTION : Do not use automatic bleed equipment (risk of foaming of the brake fluid in the hydraulic circuit).

N.B. : For the bleed operation 2 operators are necessary.

Chock and lift the vehicle on a 2 column lift.

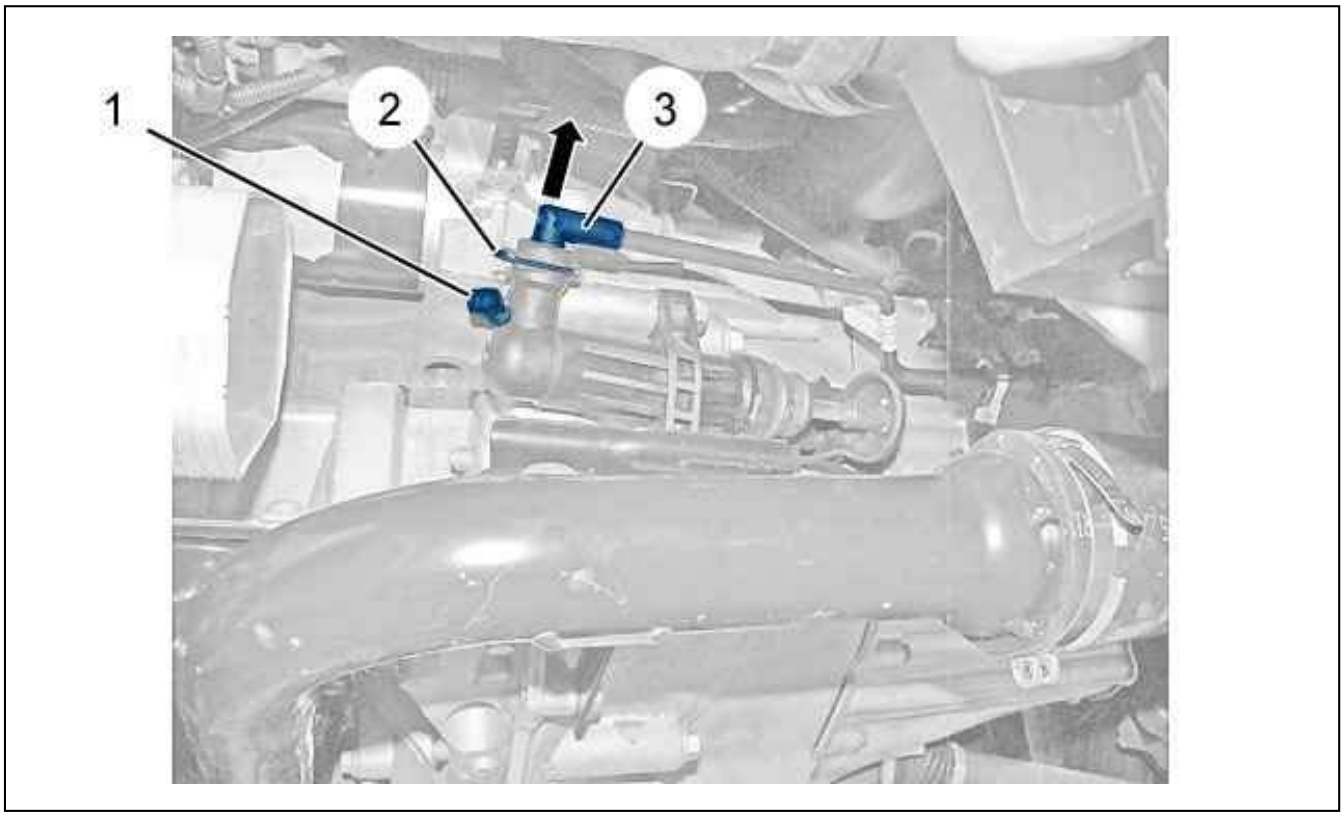

Figure : B2BI00JD

Couple a transparent pipe onto the bleed valve (1).
Sink the end of the transparent tube in a container containing brake fluid, located lower down than the clutch slave cylinder .

CAUTION : The end of the transparent pipe must be submerged into the brake fluid.

Press the locking clip (2).
Pull the clip (3) by one notch in the direction of the arrow (Position open).
Action the clutch pedal manually through its entire travel rapidly 7 times.
Leave the clutch pedal at the lower end of its travel during the last manoeuvre.
Push back the clip (3) (closed position).

Allow the clutch pedal to rise to the upper position.
Fill the brake fluid reservoir to its maximum capacity.
Press the locking clip (2).
Pull the clip (3) by one notch in the direction of the arrow (Position open).
Action the clutch pedal manually through its entire travel rapidly 7 times.
Keep the clutch pedal at the lower end of its travel during the last manoeuvre.
Push back the clip (3) (Closed position).
Uncouple the transparent pipe.
Top up the brake fluid level to the MAX. level in the brake fluid reservoir.
Press the clutch pedal rapidly 40 times.
Lower the vehicle.
Start the engine.
Apply the handbrake.
Engage a gear.

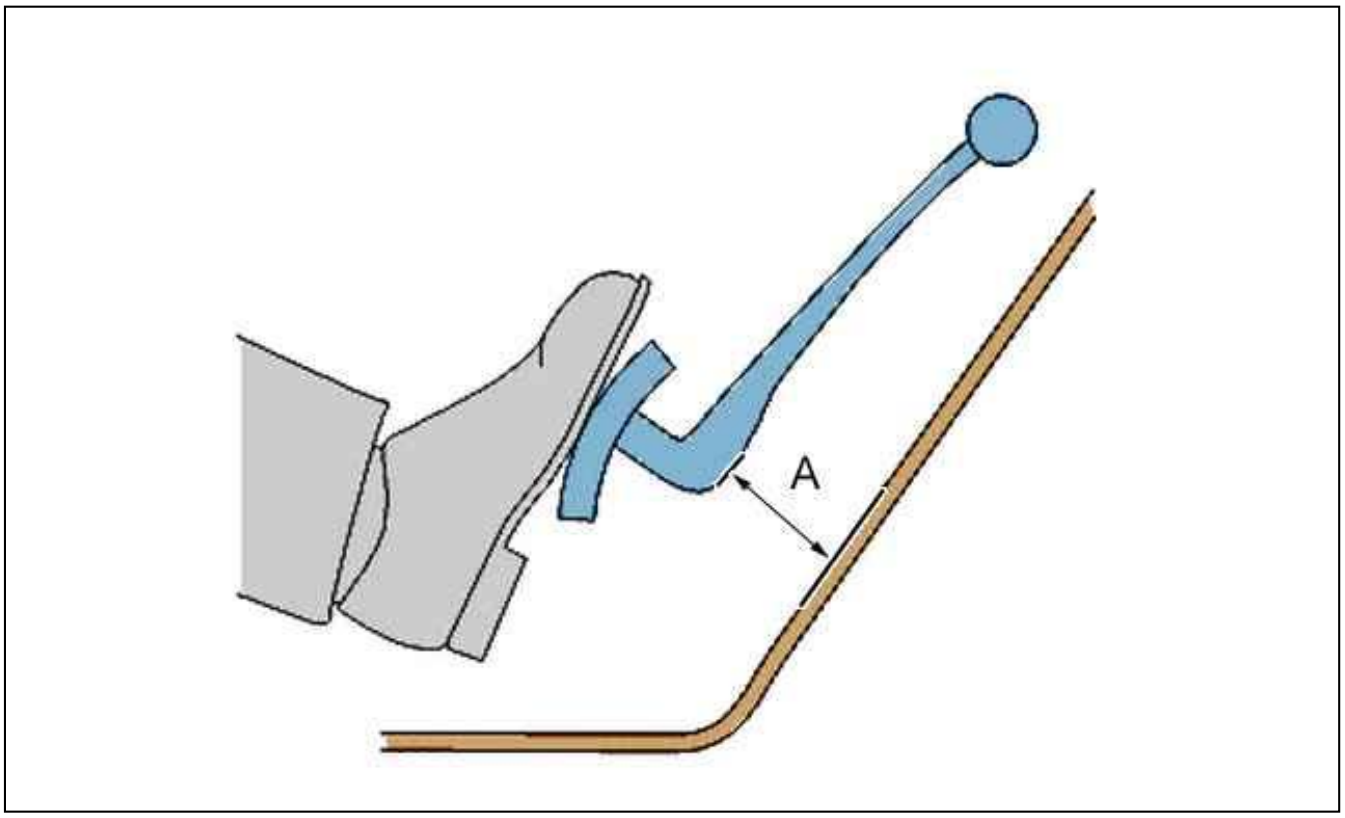

Figure : B2BP2PXD

Check that clutch mechanism friction begins at a dimension "A" of 40 mm or more (the dimension (A) is given as a guide).
Repeat the bleed operations (if necessary).

CHECKING -- ADJUSTING : BEARING PLAY - INPUT SHAFT

1. input shaft



Figure : B2CM05BD

Fit the assembled input shaft (1).

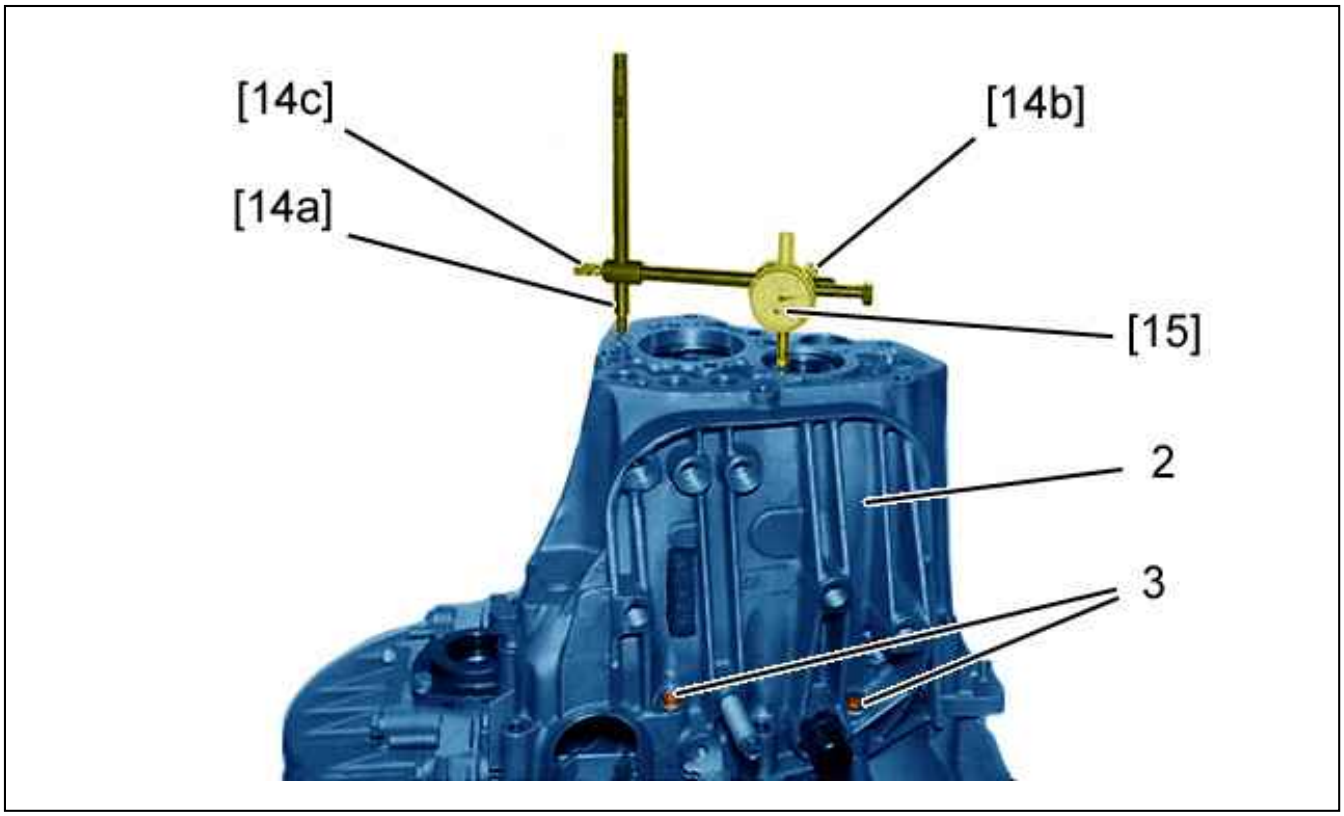

Figure : B2CM05CD

CAUTION : The presence of the minimum thickness adjustment shim under the external bearing cage is essential (6th gear end).

Refit :

- The gearbox casing (2)
- The bolts (3) (one screw out of two) ; Tighten to 1,8 ± 0,1 daN.m

Fit :

- The tools [14a], [14b], [14c]
- The dial gauge [15]

Rotate the primary shaft a few turns.
Set the dial gauge to zero.
Push the shaft axially, upwards,.
Check the value at 4 points.

CAUTION : The play should be between 0,06 and 0,15 mm.

If the value read on the dial gauge is not correct, repeat the setting.
Adjustment shims between 0,8 and 1,4 mm with a variation of 0,05 mm.
Remove :

- The tools [14a], [14b], [14c], [15]
- The bolts (3)
- The gearbox casing (2)
- The primary shaft (1)

2. Differential gears

Adjust the differential gearing clearance .

REFITTING : MLGU6 MANUAL GEARBOX

1. Refitting : Differential housing



Figure : B2CM04PD

Refit :

- Differential crown wheel (1)
- The outer bearing rings (2) and (3)

Check that the centring pin (4) is present.

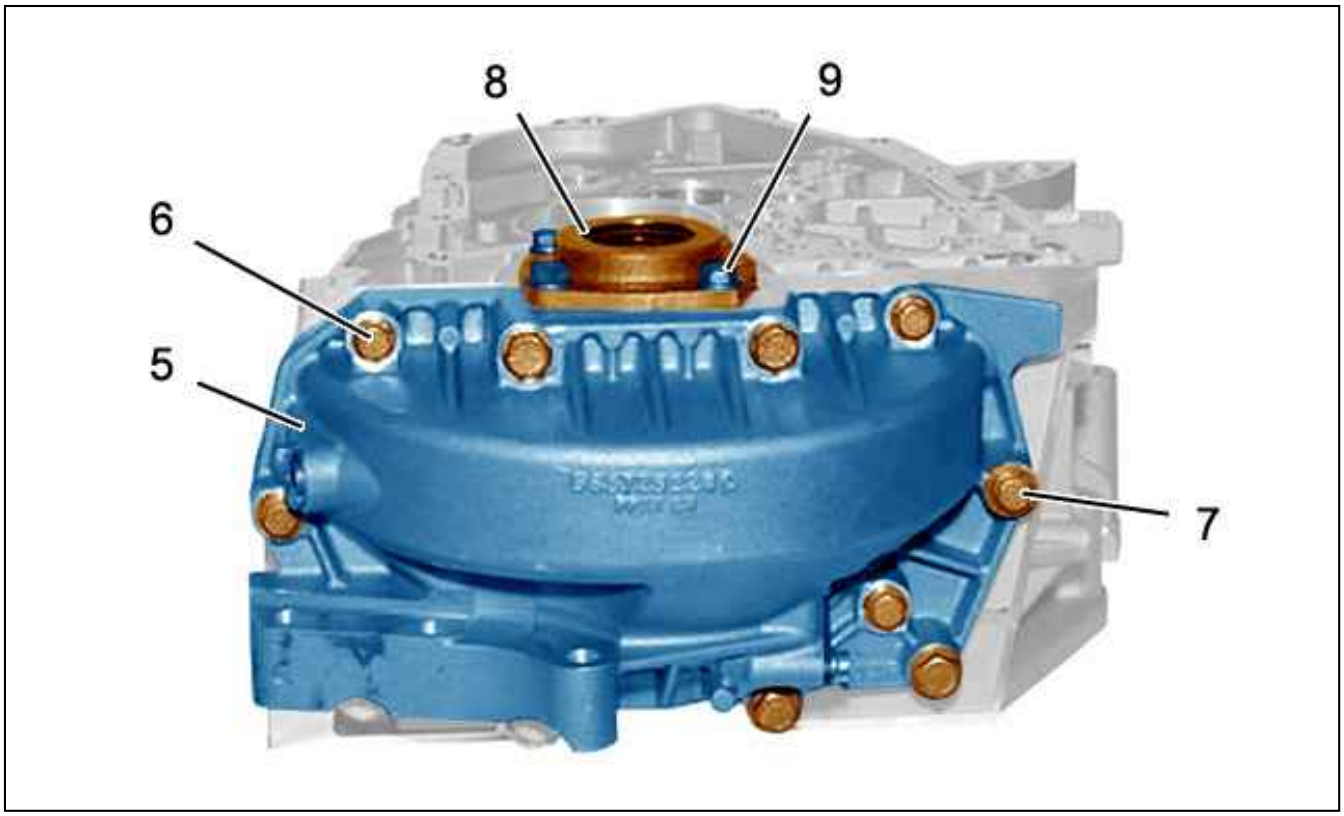

Figure : B2CM04QD

Coat the joint face with a thin, even layer of sealing paste "E10".
Refit :

- The differential housing (5)
- The bolts M10 (6) ; Tighten to 4 daN.m
- The bolts M8 (7) ; Tighten to 1,8 daN.m

Coat the joint face with a thin, even layer of sealing paste "E10".
Refit :

- The bearing thrust plate (8)
- The thrust bolts (9) ; Tighten to 2 daN.m

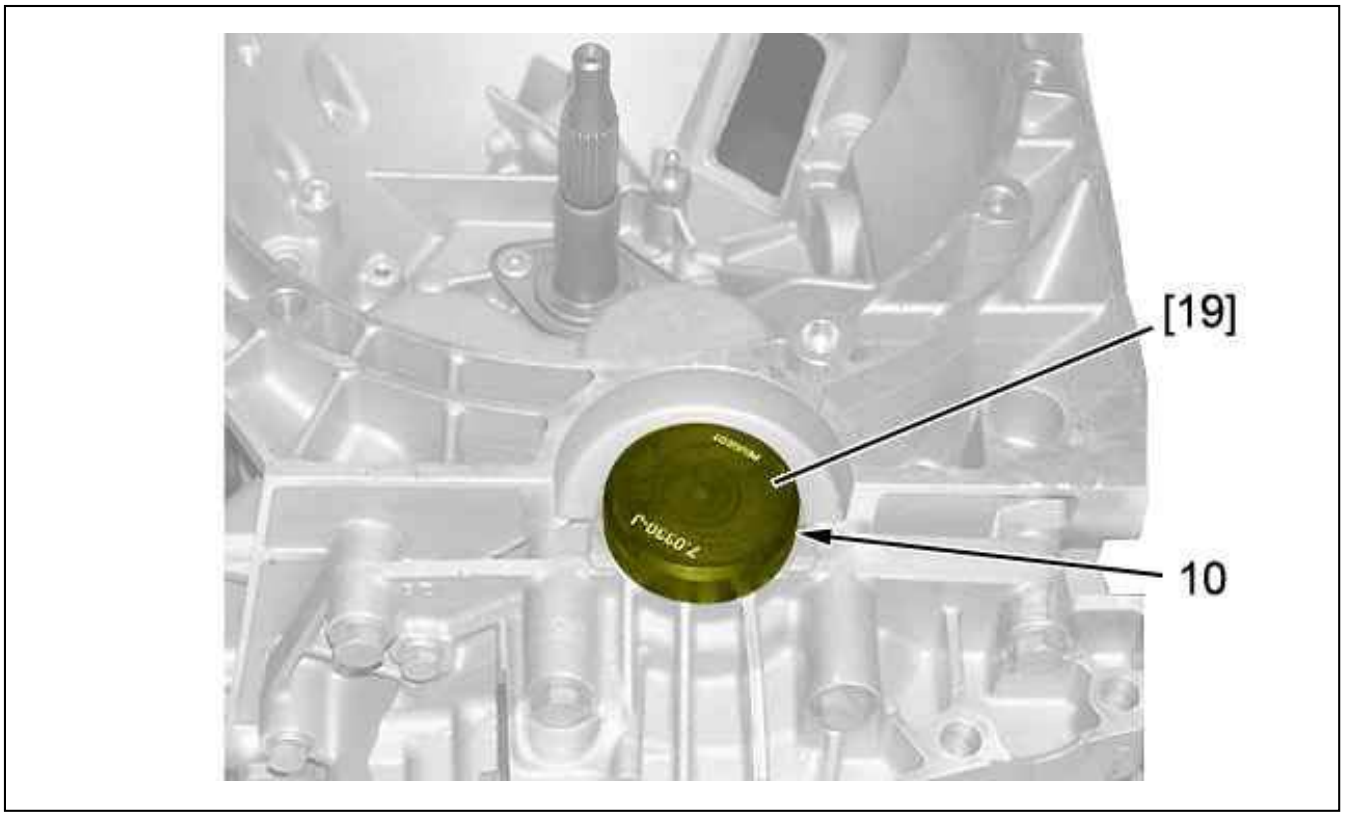

Figure : B2CM04RD

Refit the right hand transmission seal (10) ; Using tool [19] .

2. Refitting : Primary and secondary shafts

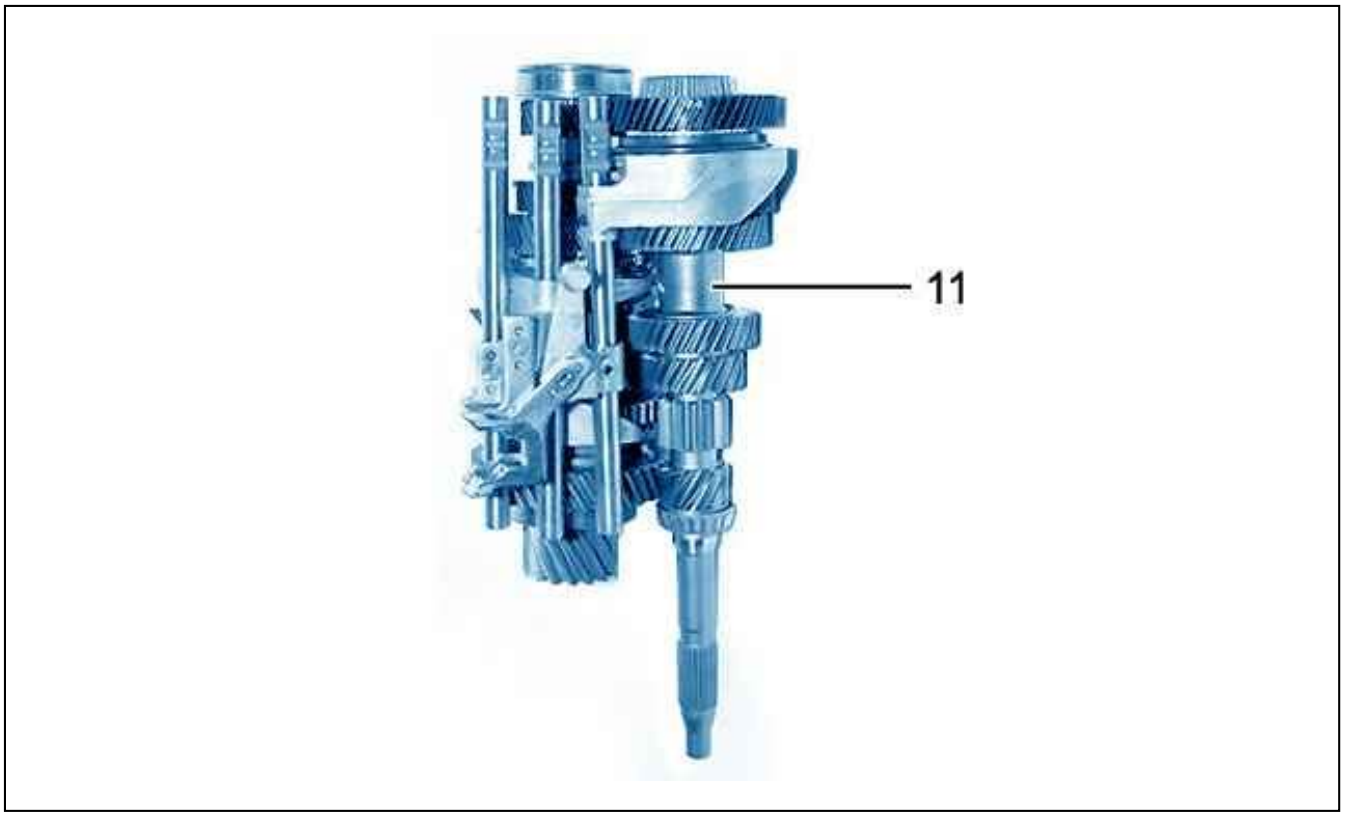

Figure : B2CM04SD

Prepare and assemble the assembly (11) :

- input shaft
- output shaft
- Shaft and fork (1st and 2nd gears)
- Shaft and fork (third and fourth gear)
- Shaft and fork (fifth and sixth gear)

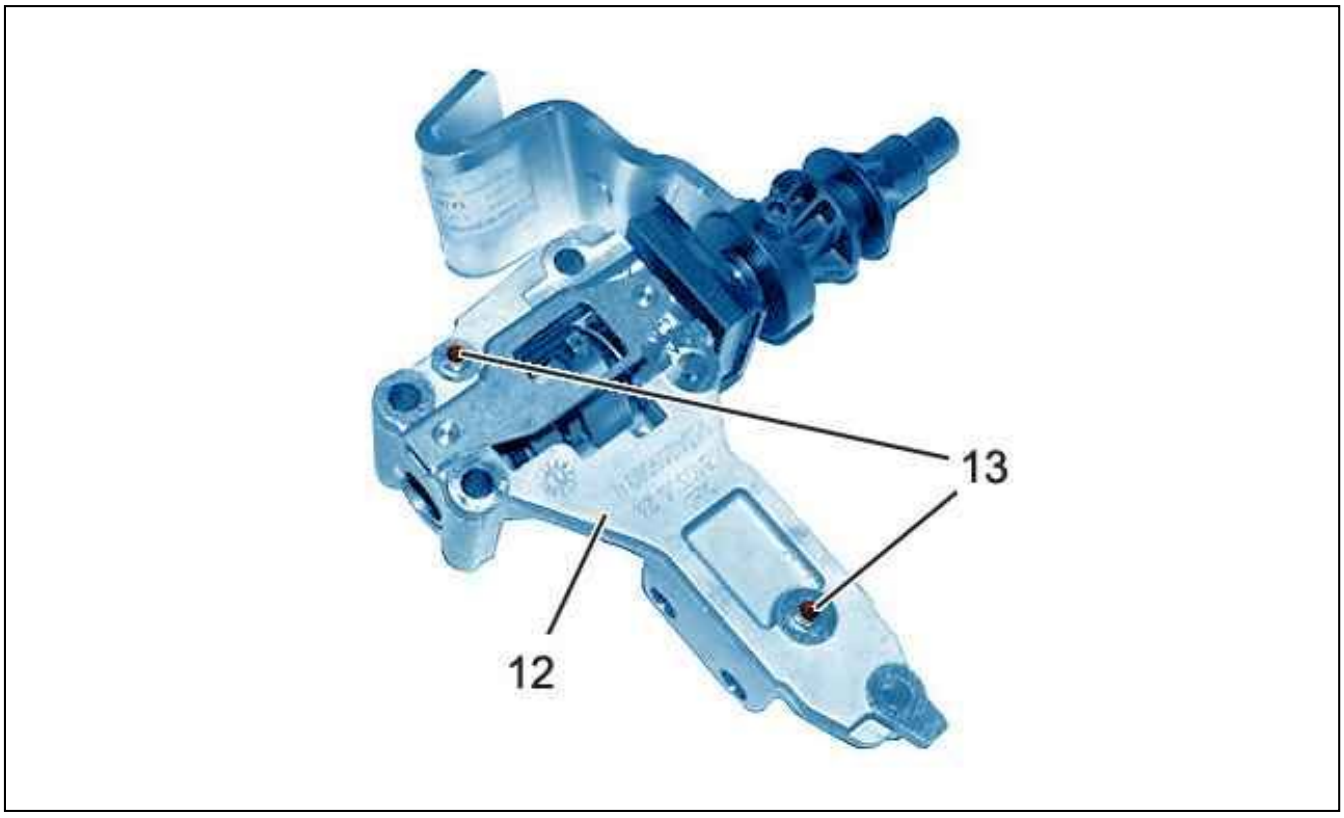

Figure : B2CM04TD

Before fitting the gear control plate (12), press down the 2 centring pins (13) to the bearing surface .

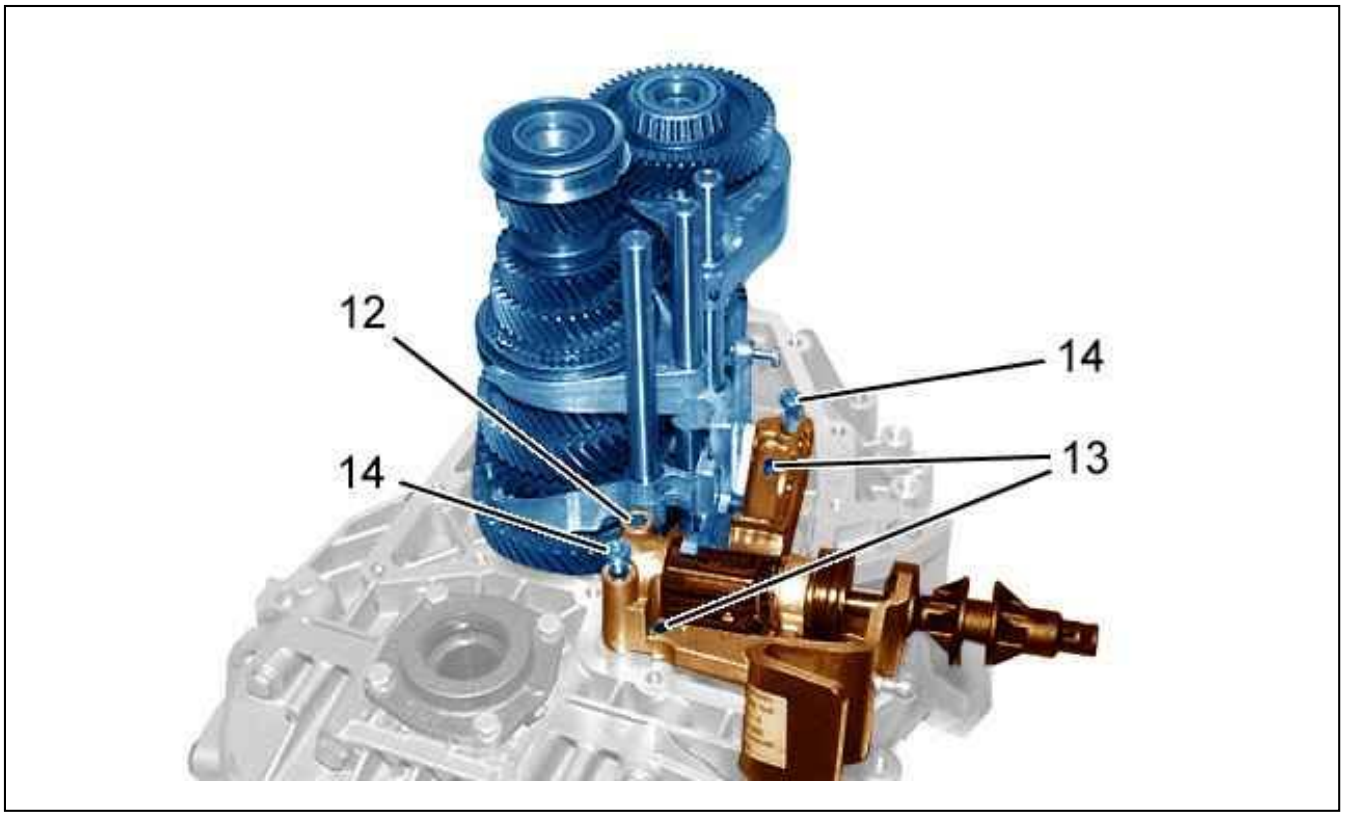

Figure : B2CM04UD

Put the prepared assembly (11) in place.
Engage 2nd, 4th and 6th gears.
Position the gear control plate (12) on the gear engagement fingers.
Place the gear selectors and the gear lever in neutral.
Position the plate with two of the bolts (14).

ESSENTIAL : Press down the two centring pins (13) using a pin punch.

Fit the bolts (14) ; Tighten to 2,0 daN.m.

CAUTION : After refitting the gear control plate, check that the 1st/2nd, 3rd/4th and 5th/6th forks are positionec correctly in the grooves of the sliding gears.

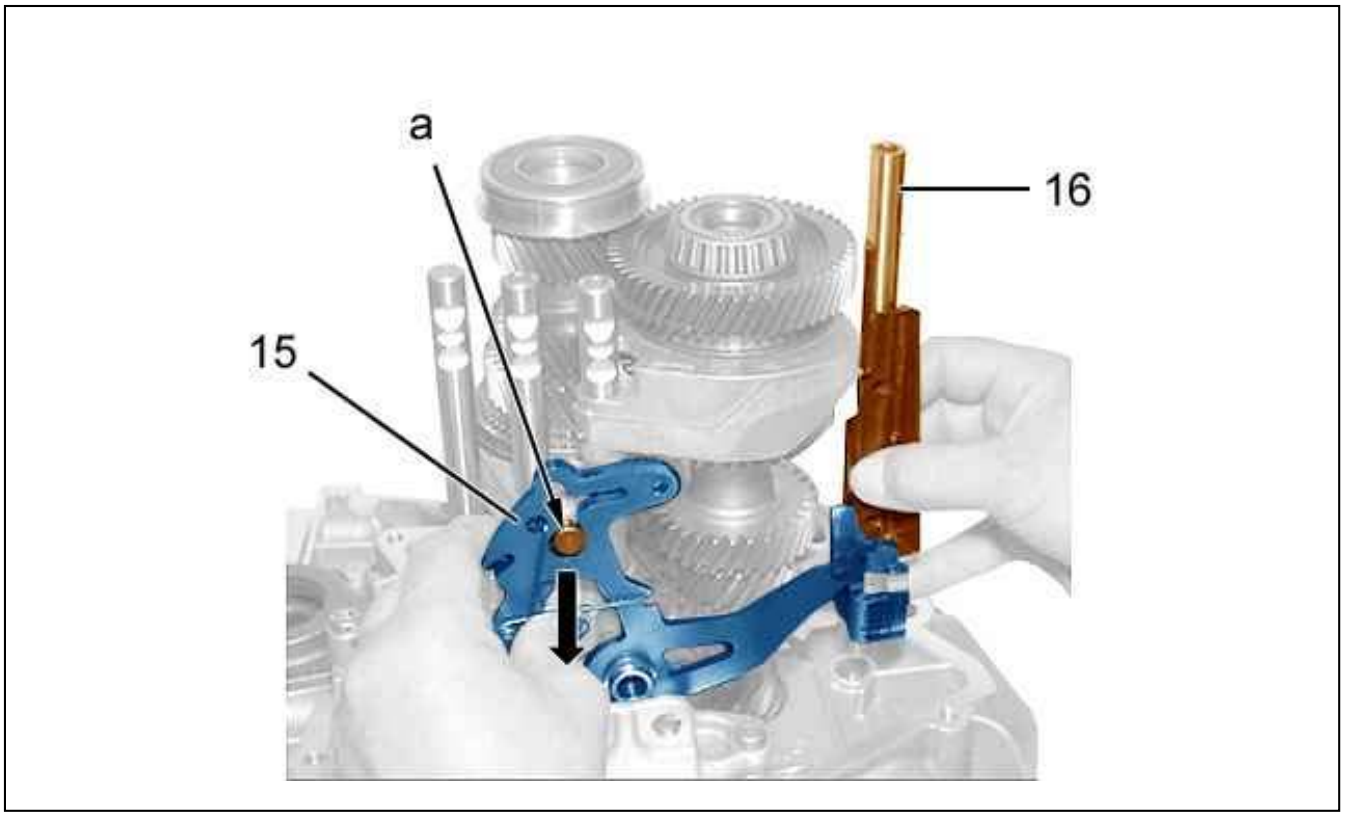

Figure : B2CM04VD

Refit the reverse gear rocker lever (15) / fork (16) assembly.
Engage the rocker lever (15) on the pin "a" then lower the assembly .

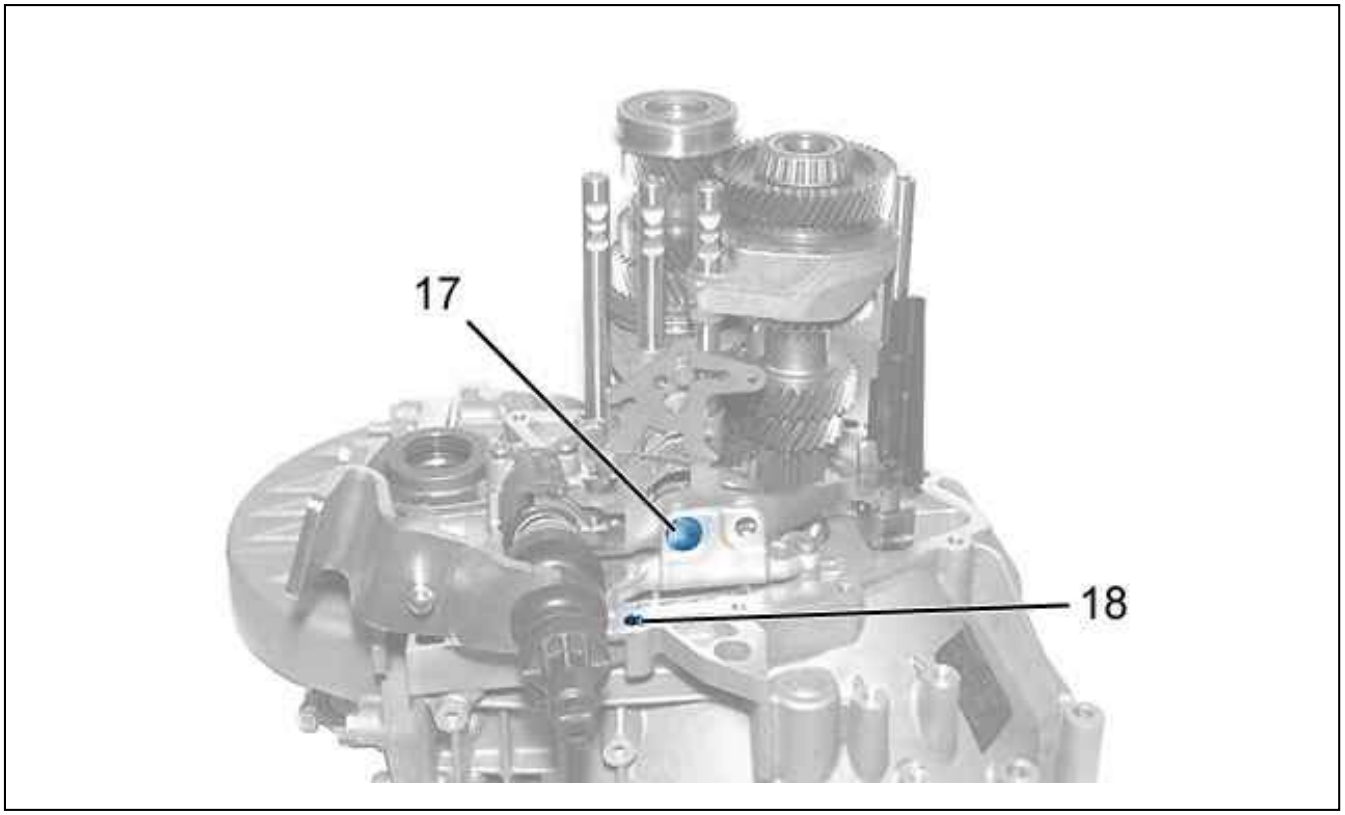

Figure : B2CM04WD

Refit :

- The rocking lever shaft (17)
- The centring pin (18)



Figure : B2CM04XD

Locate the anti-rotation protrusion "b" on the reverse gear shaft (19) in order to align it on fitting with the groove "c" of th clutch housing .

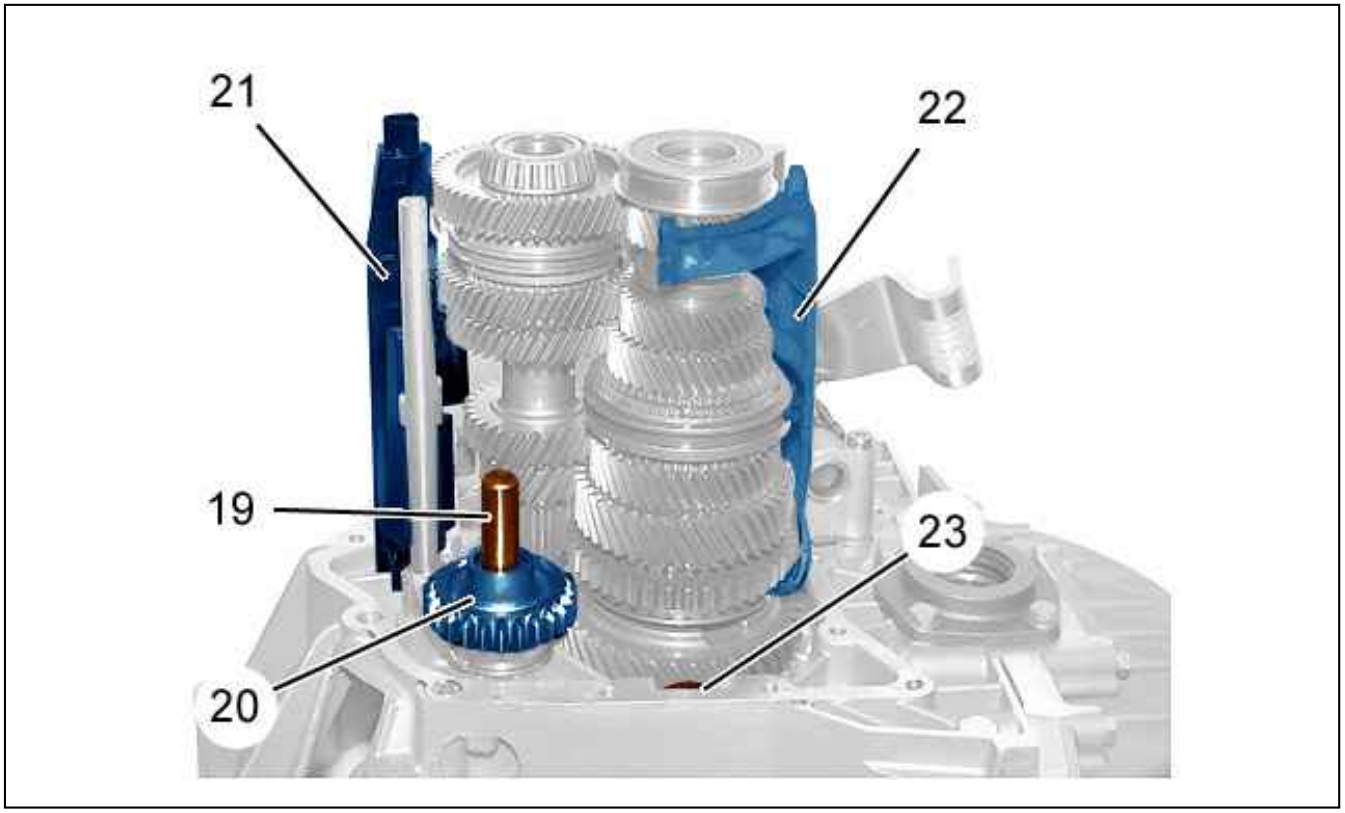

Figure : B2CM04YD

Refit :

- Reverse relay spindle (19) equipped with its gear (20)
- The oil filler neck (21)
- The oil filler neck (22) (output shaft)
- The magnetic shim (23)

CAUTION : Check the fitting of the reverse gear shaft .

3. Refitting the gearbox casing

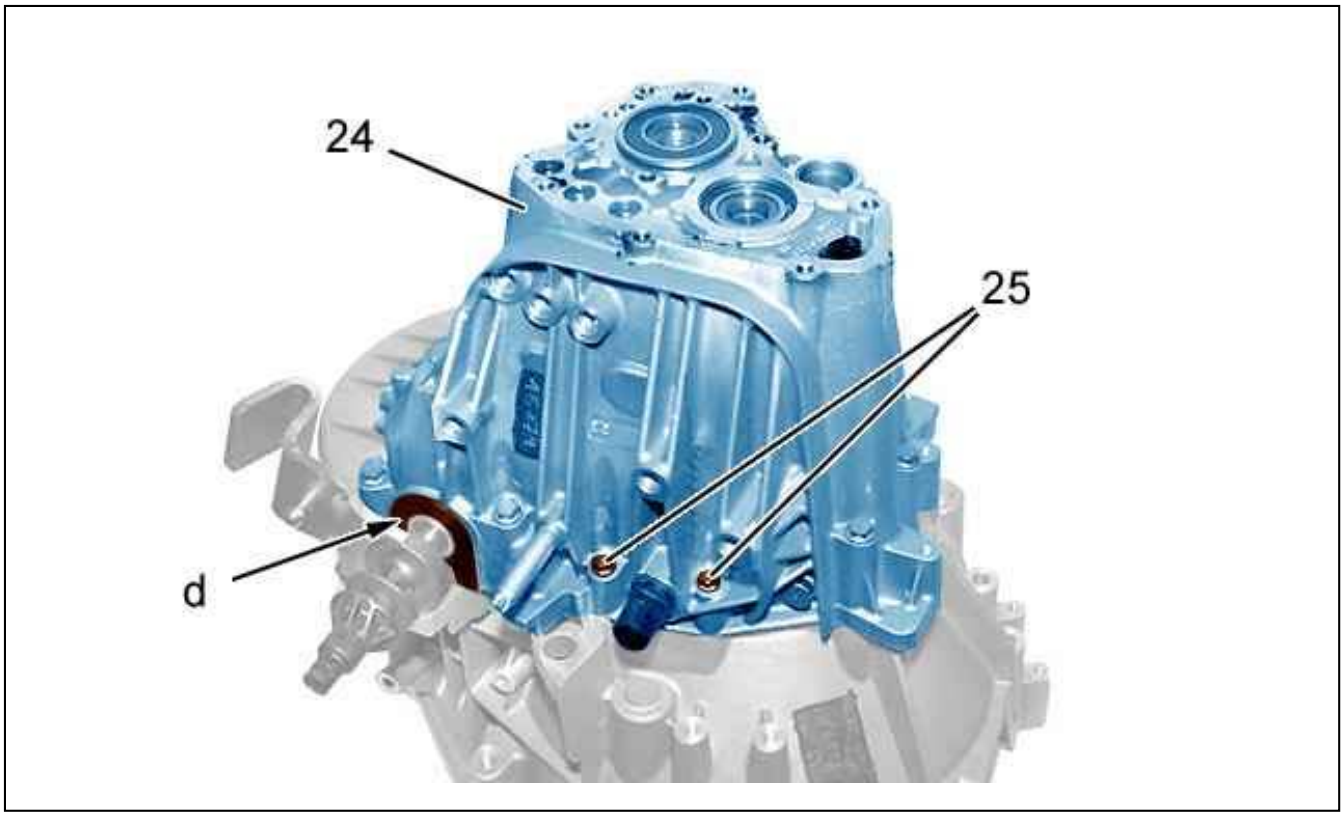

Figure : B2CM04ZD

CAUTION : Check that the gearbox casing centring pins are present and that the magnetic disc is in its location.

Coat the joint face with a thin, even layer of sealing paste "E10".
Fit the gearbox casing (24) on the clutch housing.
Position the shaft seal correctly (at "d").
Tighten the bolts (25) to 1,80 ± 0,18 daN.m.

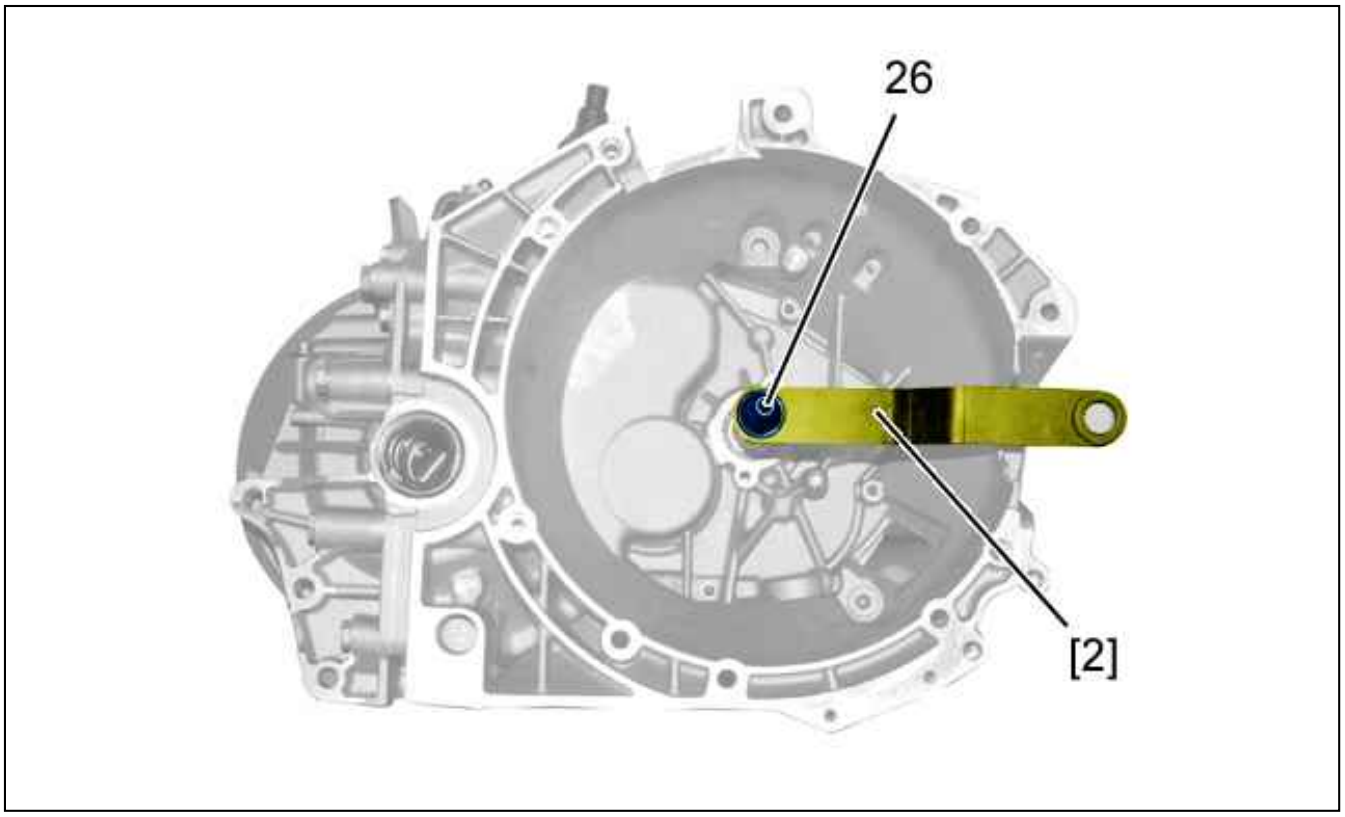

Figure : B2CM050D

Engage a gear.

Place tool [2] on the input shaft (26).

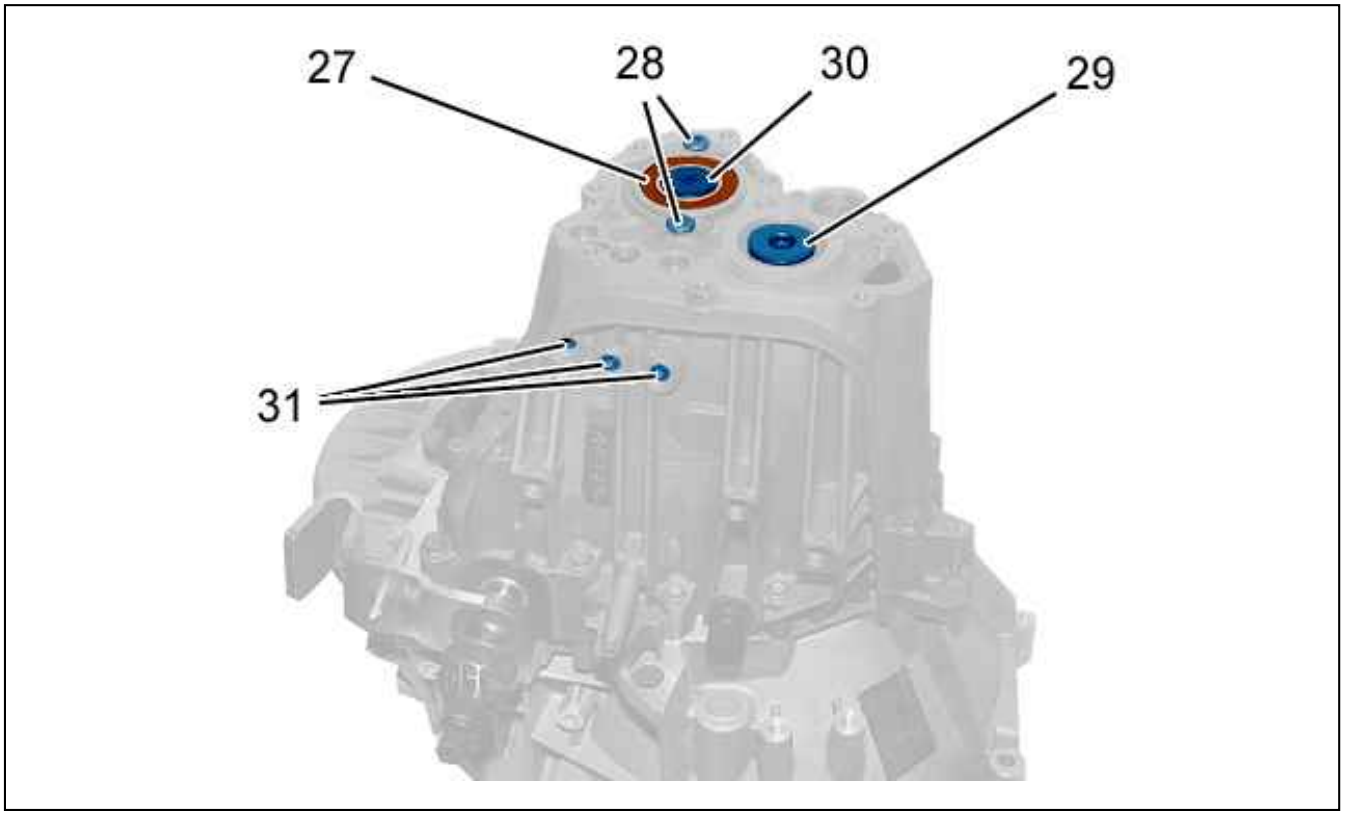

Figure : B2CM051D

Refit :

- The bearing locking ring (27)
- The securing bolts (28) ; Tighten to 2,5 daN.m
- The input shaft line tightening bolt (29) ; Using tool [4] ; Tighten to 8 daN.m
- The secondary shaft bolt (30) ; Tighten to 15 daN.m
- The balls, the springs and the locking caps (31) ; Tighten to 2,5 daN.m

STRIPPING-ASSEMBLING : COMPONENTS INTERNAL TO THE GEARBOX (MECHANICAL) TYPE MLGU6

ESSENTIAL : Bearings removed must not be re-used.

ESSENTIAL : The recommended tools should be used .

1. input shaft

1.1. Stripping

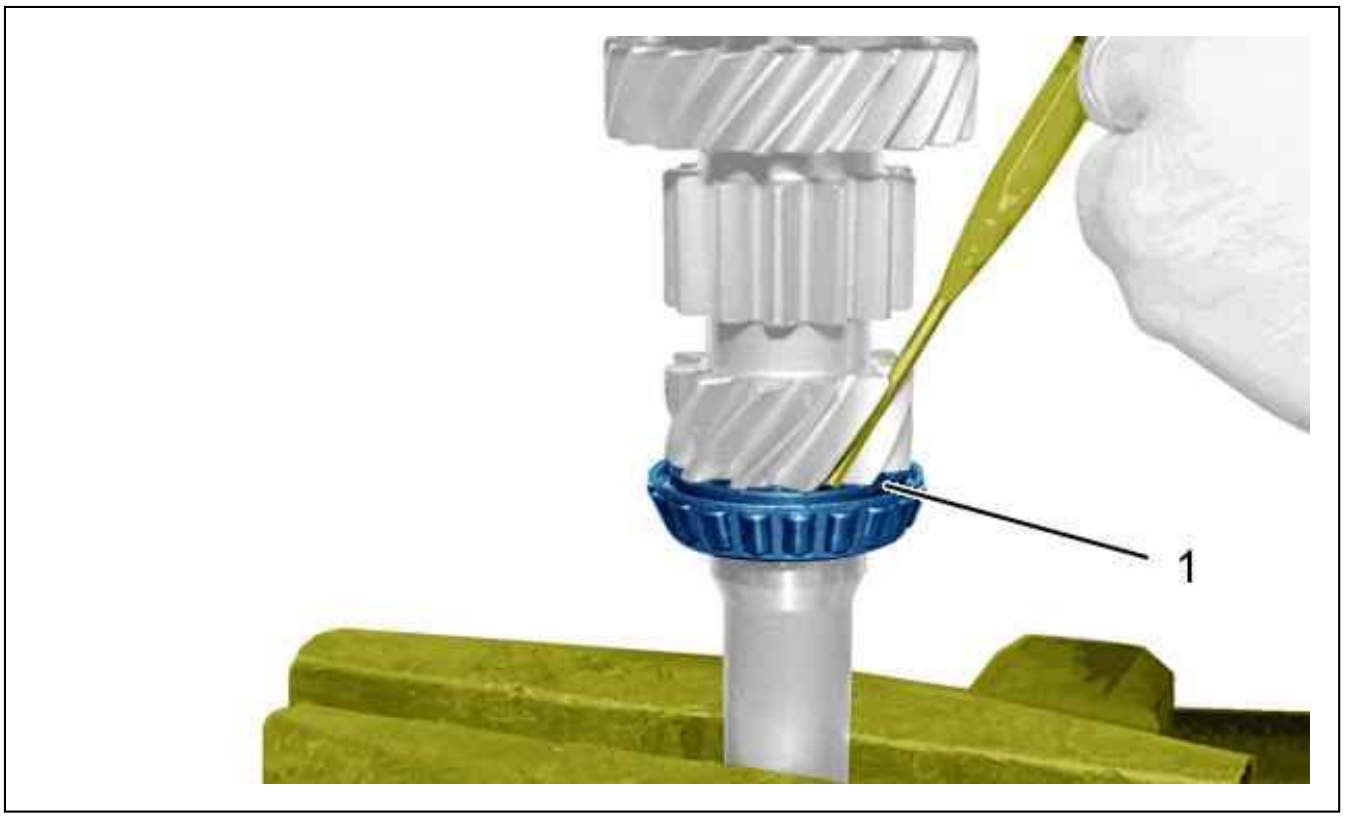

Figure : B2CM03JD

Lift bearing (1) by 1 to 2 mm in order to allow tool [5a] to be fitted without damaging 1st gear .

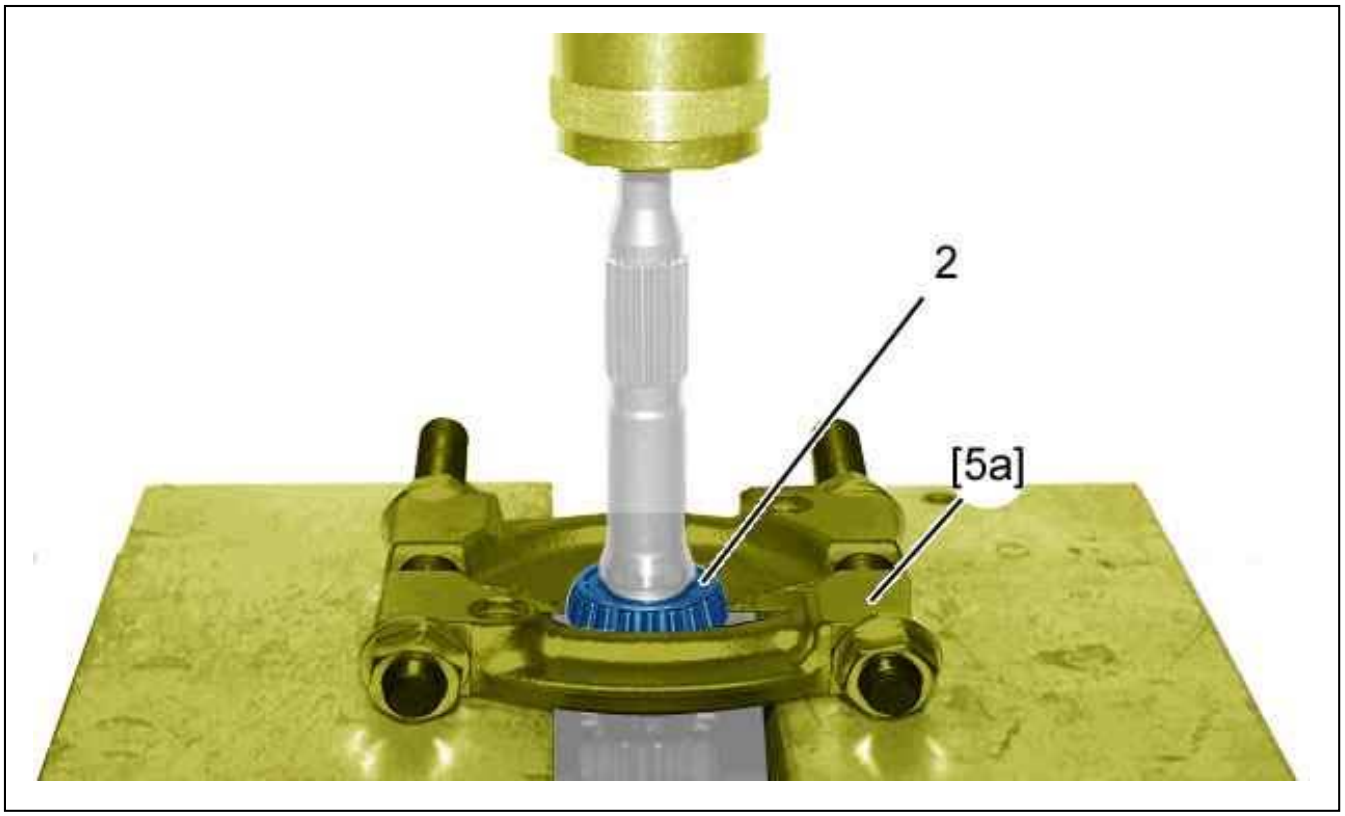

Figure : B2CM03KD

CAUTION : Do not use the bearing stop flange as a support.

Remove the bearing (2) 1st gear end) ; Using tool [5a] and press .

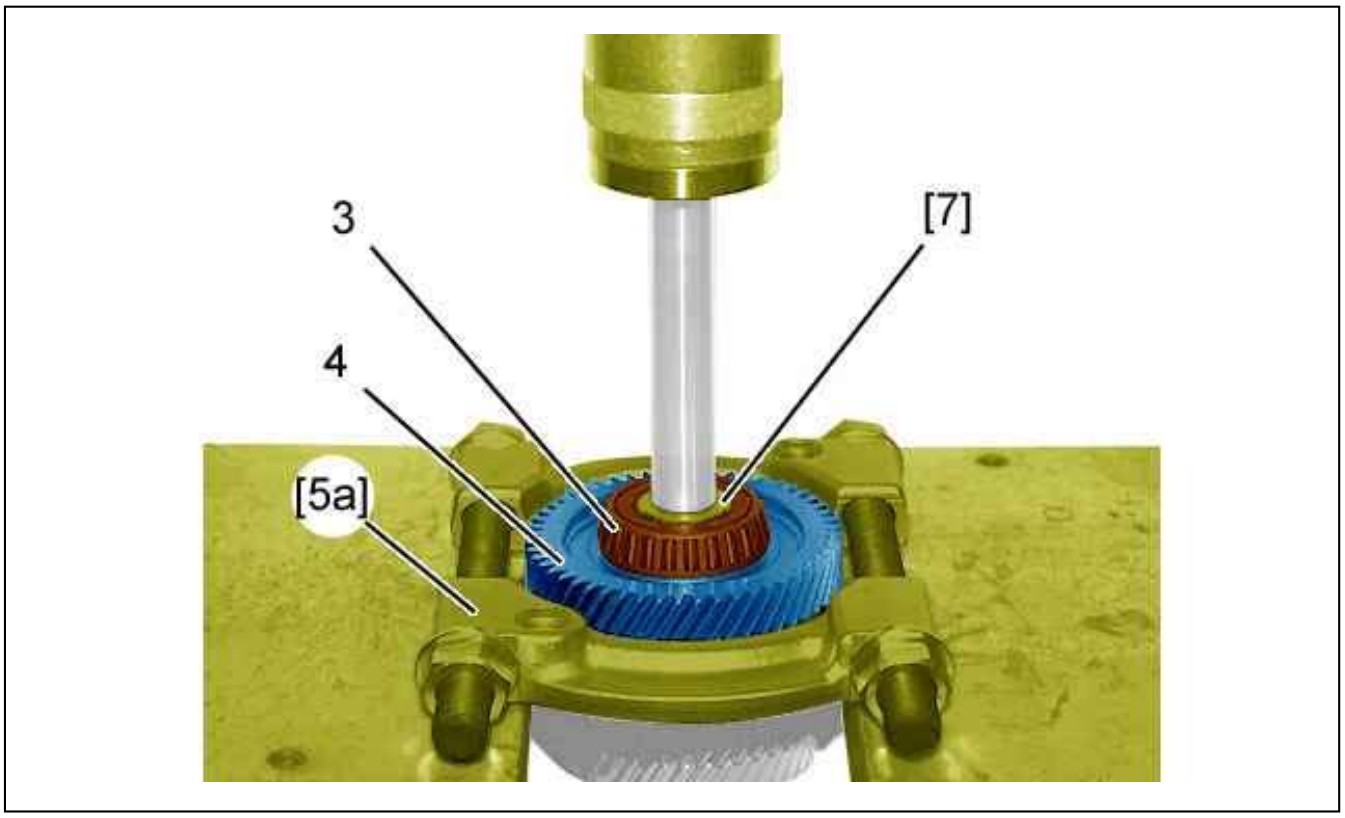

Figure : B2CM03LD

Remove :

- The 6th gear bearing (3)
- The 6th gear pinion (4) ; Using tools [5a], [7] and press

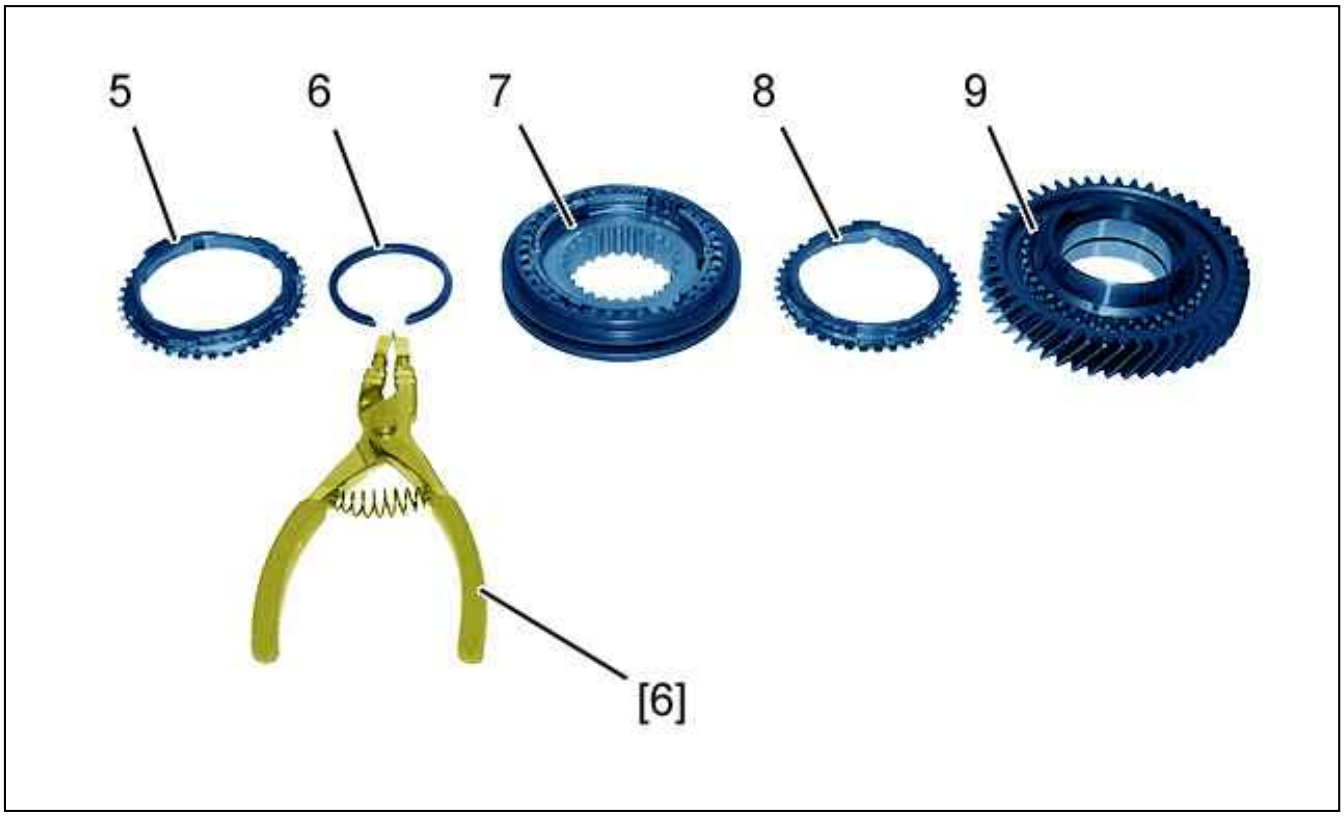

Figure : B2CM03MD

Remove :

- The synchronizer ring (5) of the 6th gear pinion
- The stop ring (6) ; Using tool [6]
- The dog clutch sleeve (7) (5th - 6th gear)
- The synchronizer ring (8) of the 5th gear pinion
- 5th speed gear (9)

1.2. Re-assembling

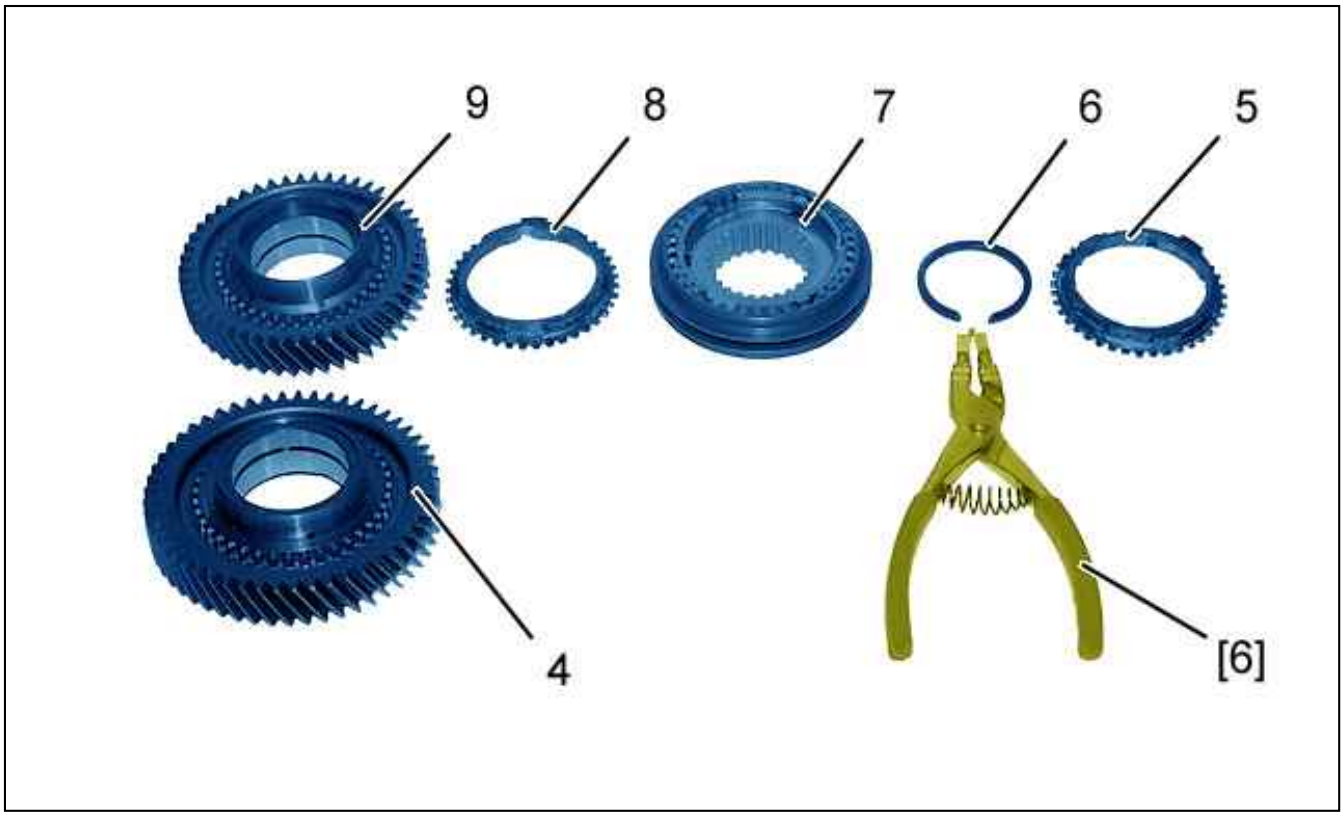

Figure : B2CM03ND

Refit :

- 5th speed gear (9)
- The synchronizer ring (8) of the 5th gear pinion
- The dog clutch sleeve (7) (5th - 6th gear)
- The stop ring (6) ; Using tool [6]
- The synchronizer ring (5) of the 6th gear pinion
- The 6th gear pinion (4)

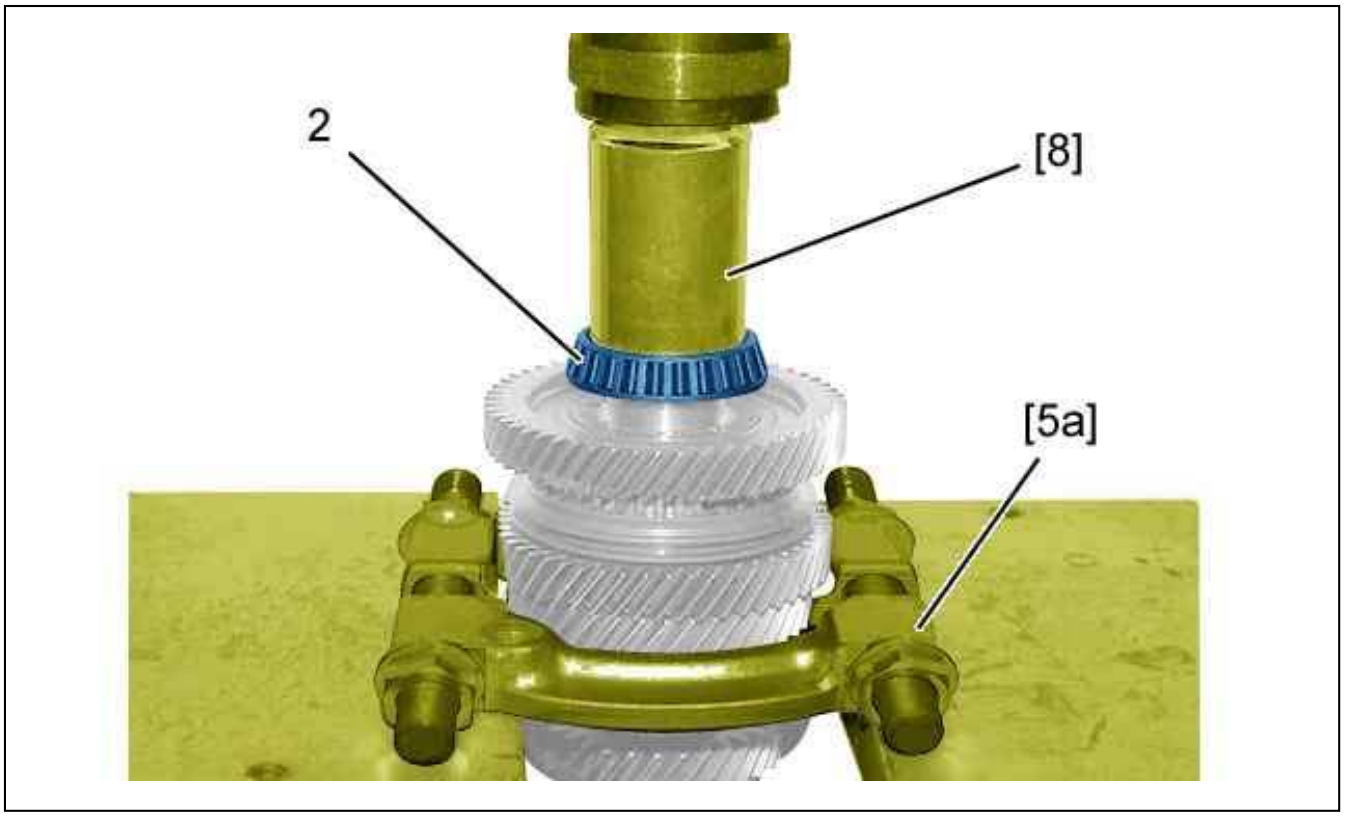

Figure : B2CM03PD

Fit the bearing (2) (6th gear end) ; Using tools [5a], [8] and press .

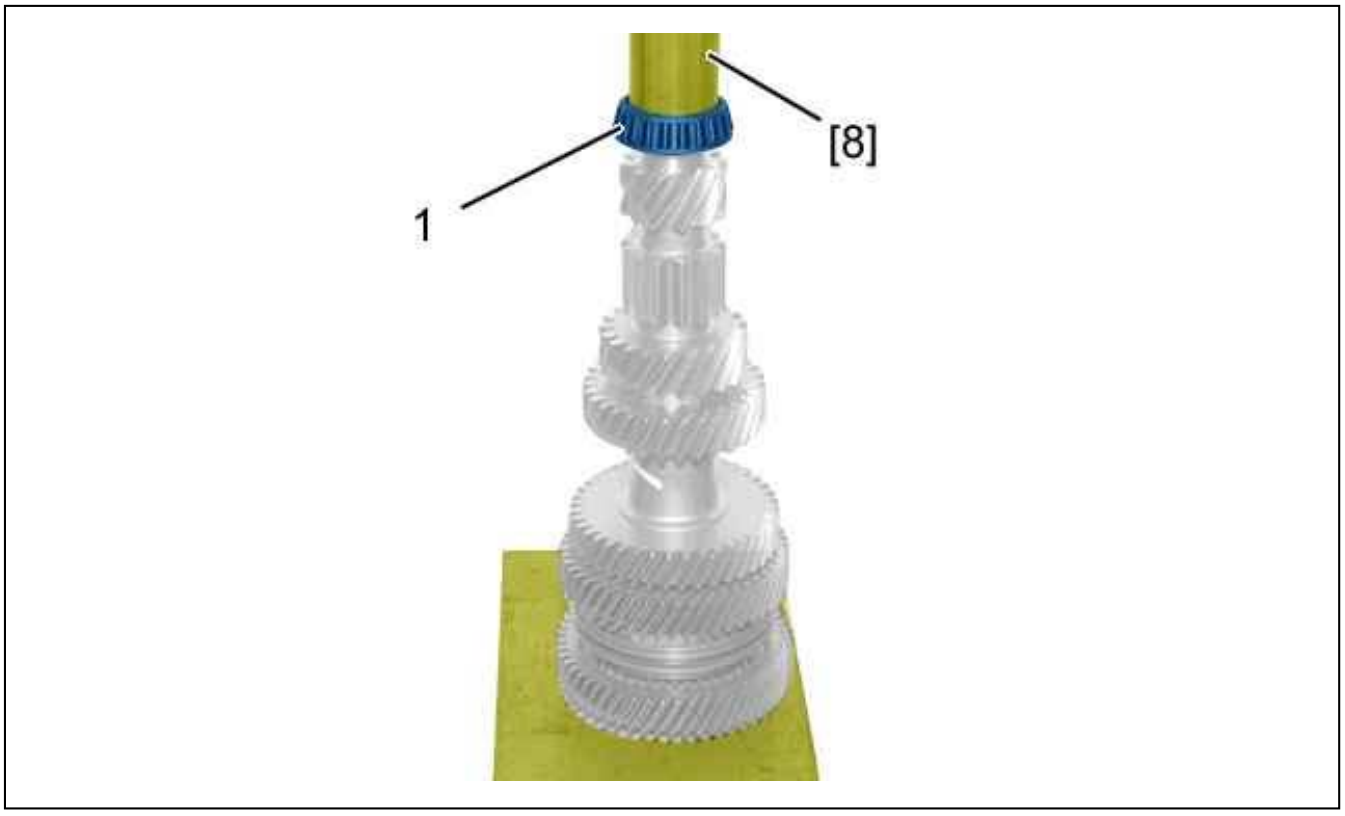

Figure : B2CM03QD

Fit the bearing (1) 1st gear end) ; Using tool [8] and press .

2. output shaft

2.1. Stripping

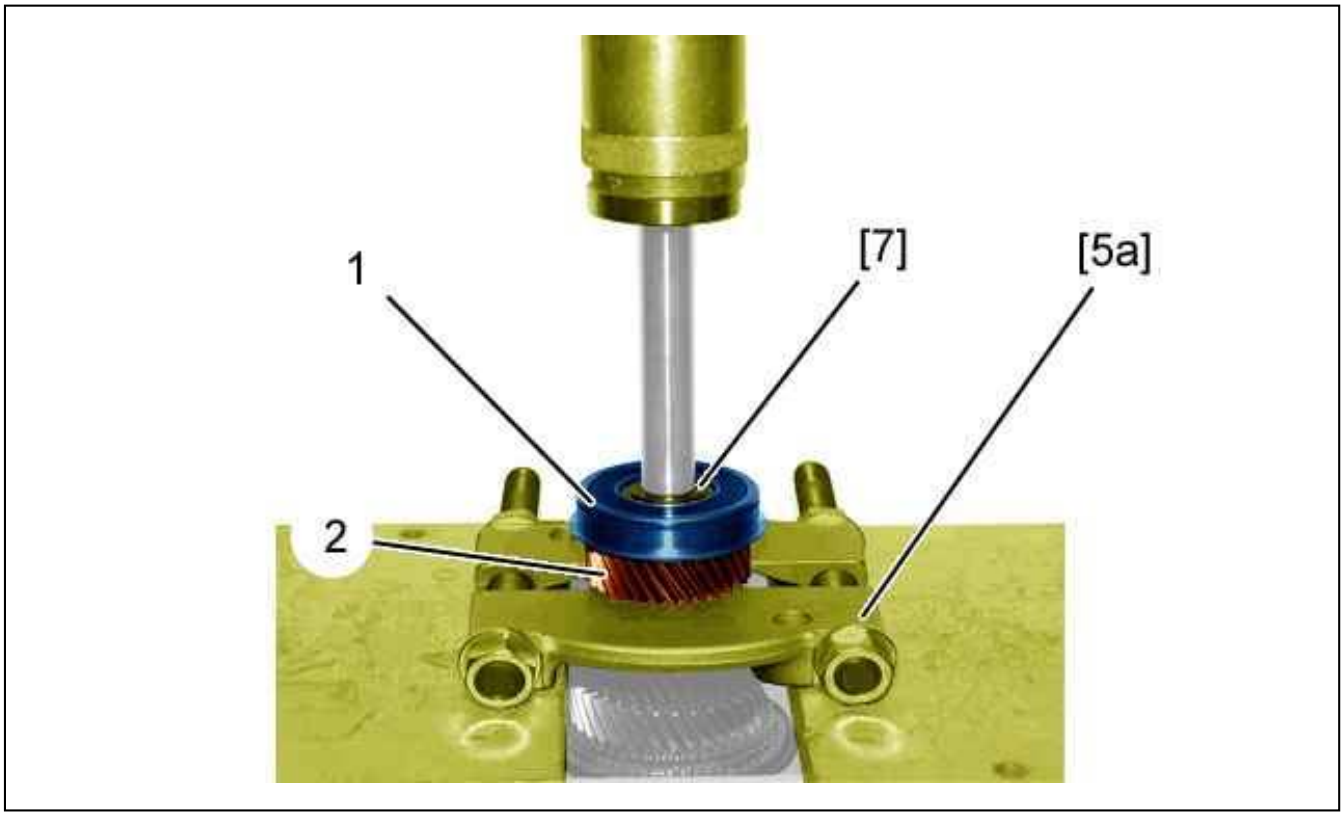

Figure : B2CM03RD

Remove : Using tools [5a], [7] and press :

- The 6th gear bearing (1)
- The 6th gear pinion (2)

N.B. : If rust is present on removal between the shaft and the 5th and 6th speed gears, the shaft and the rusty gears must be replaced.

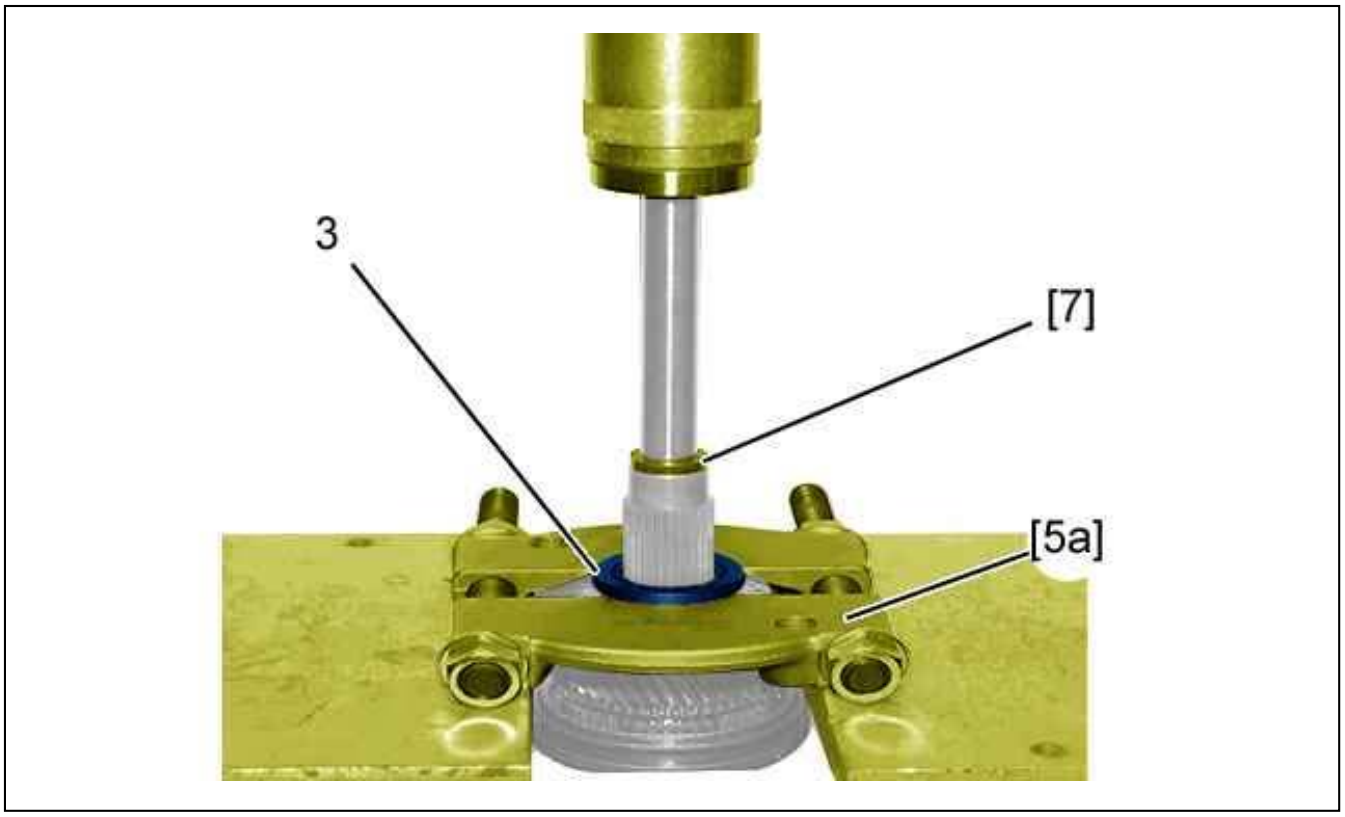

Figure : B2CM03SD

Remove : 5th speed gear (3) ; Using tools [5a], [7] and press .

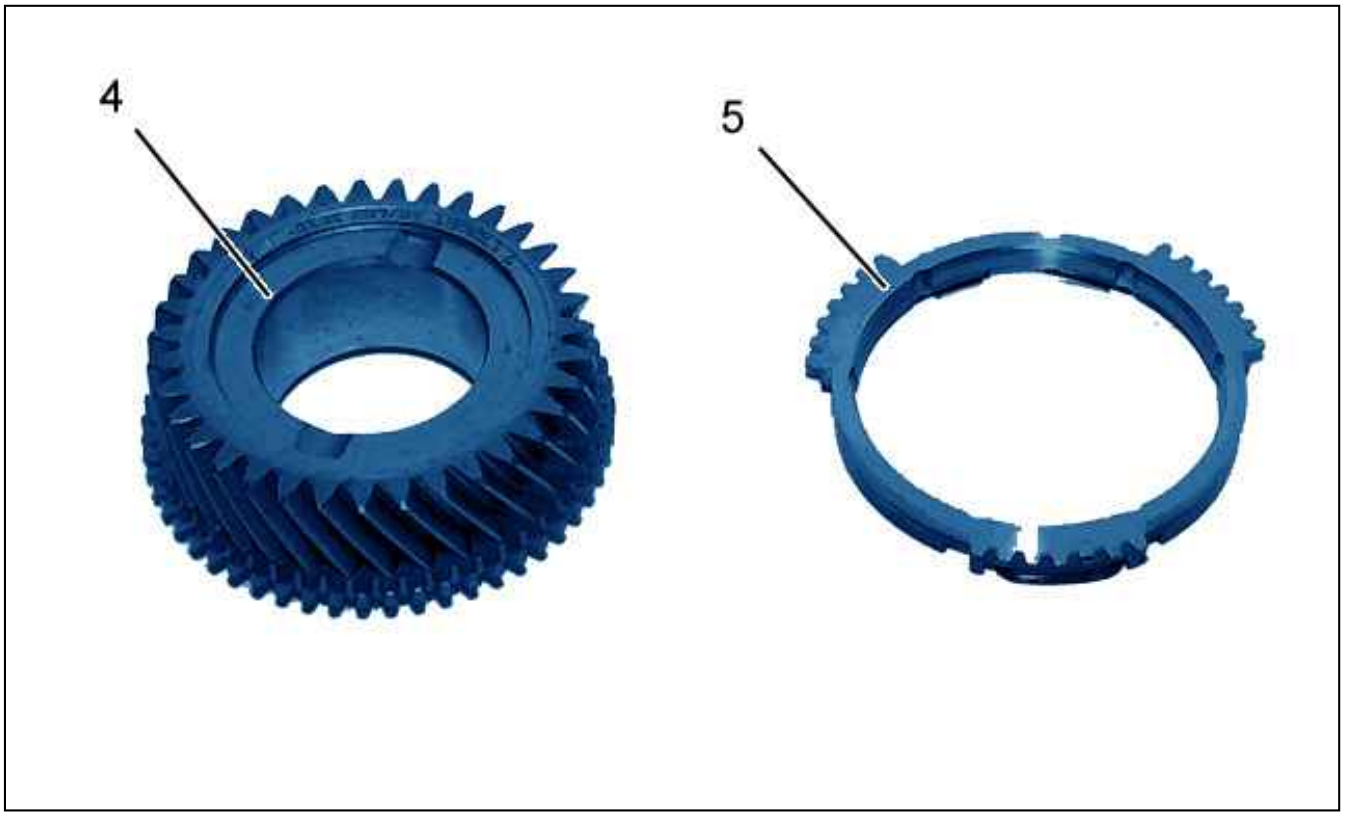

Figure : B2CM03TD

Remove (on the work bench) :

- The 4th speed gear (4)

- 4th speed gear synchronizer ring (5)

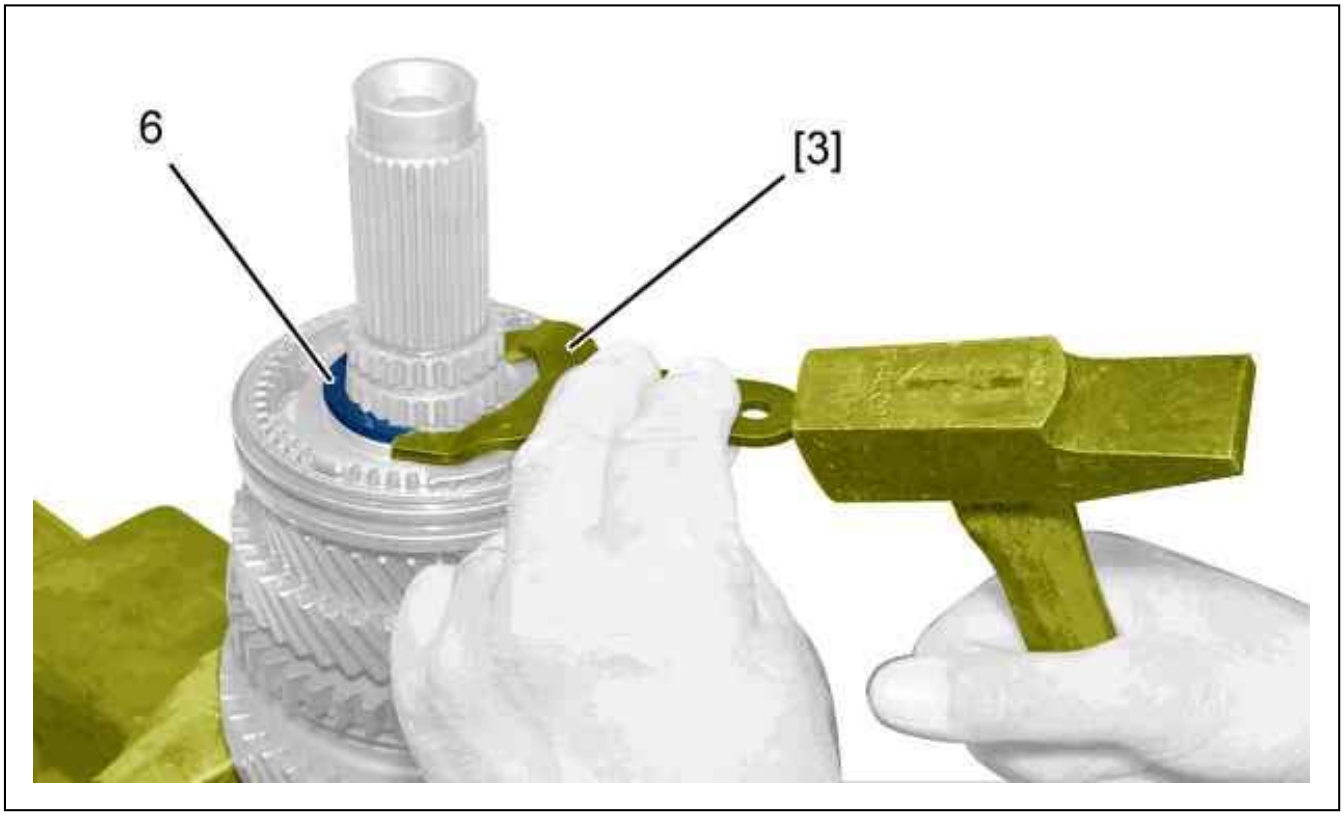

Figure : B2CM03UD

Remove the locking ring (6) ; Using tool [3].

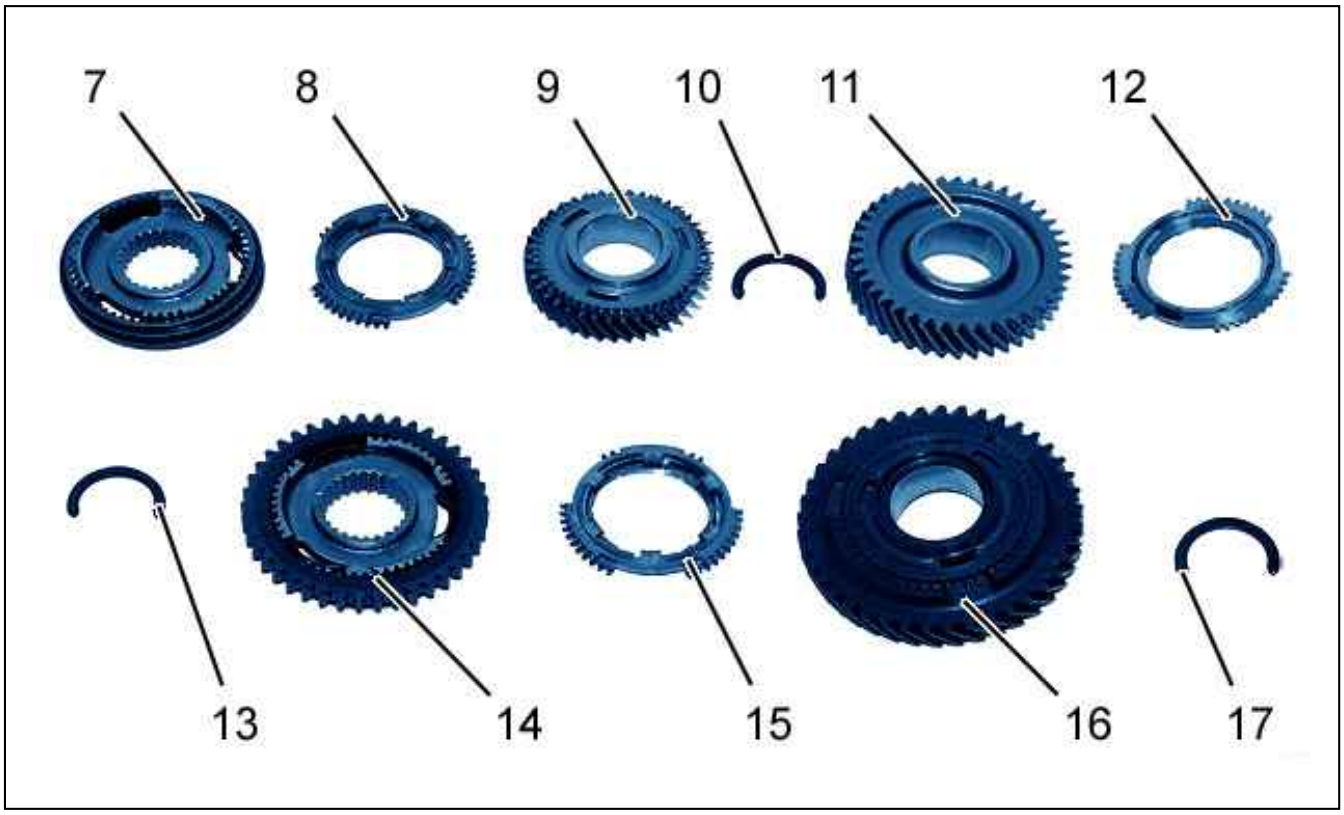

Figure : B2CM03VD

Remove :

- The 3rd 4th clutch engagement sleeve assembly (7)
- 3rd speed gear synchronizer ring (8)
- The 3rd speed gear (9)
- The stop ring (10) ; Using tool [3]
- 2nd speed gear (11)
- 2nd speed gear synchronizer ring (12)
- The stop ring (13) ; Using tool [3]
- The 2nd 1st clutch engagement sleeve assembly (14)
- The 1st speed gear synchronizer ring (15)
- 1st speed gear (16)
- The stop ring (17) ; Using tool [3]

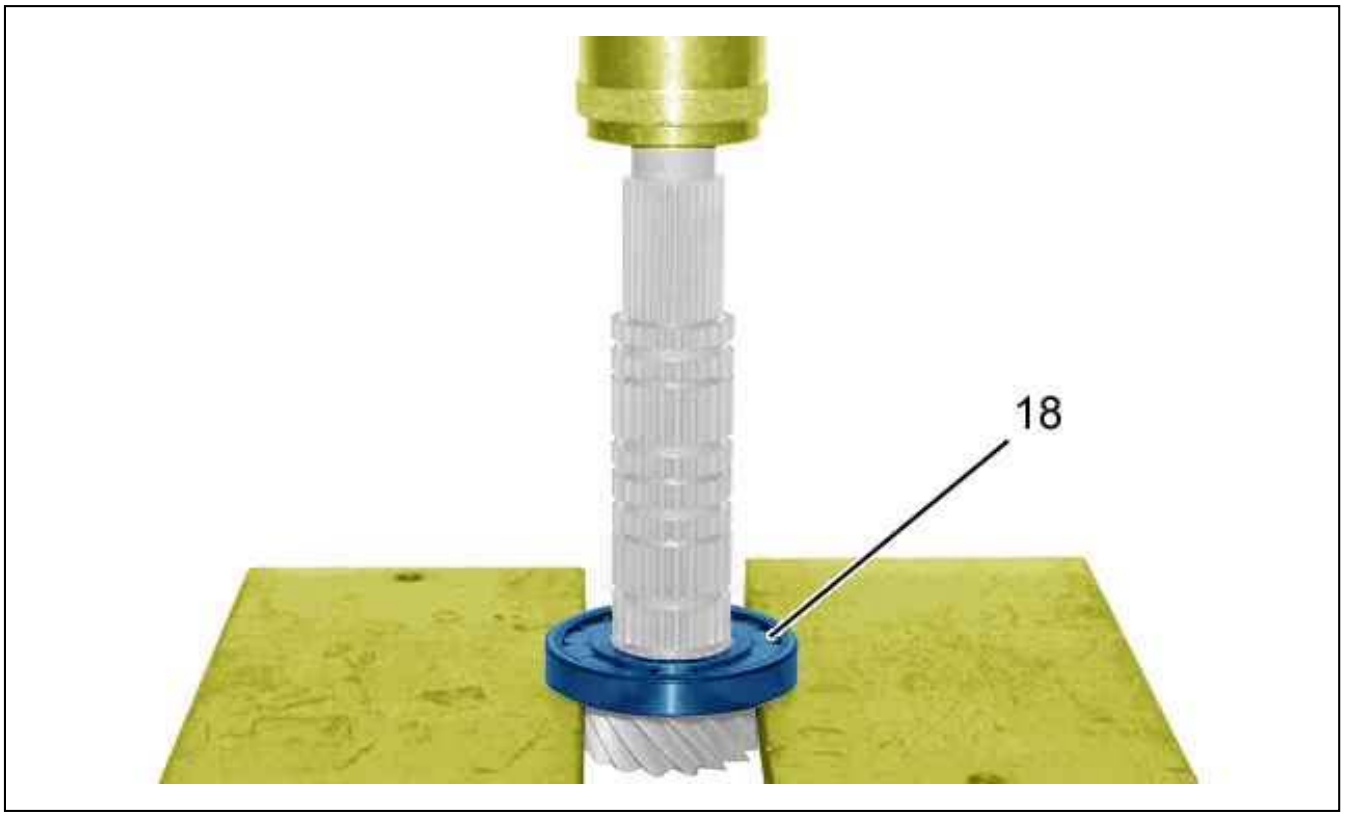

Figure : B2CM03WD

Remove the bearing (18) using a press.

2.2. Re-assembling

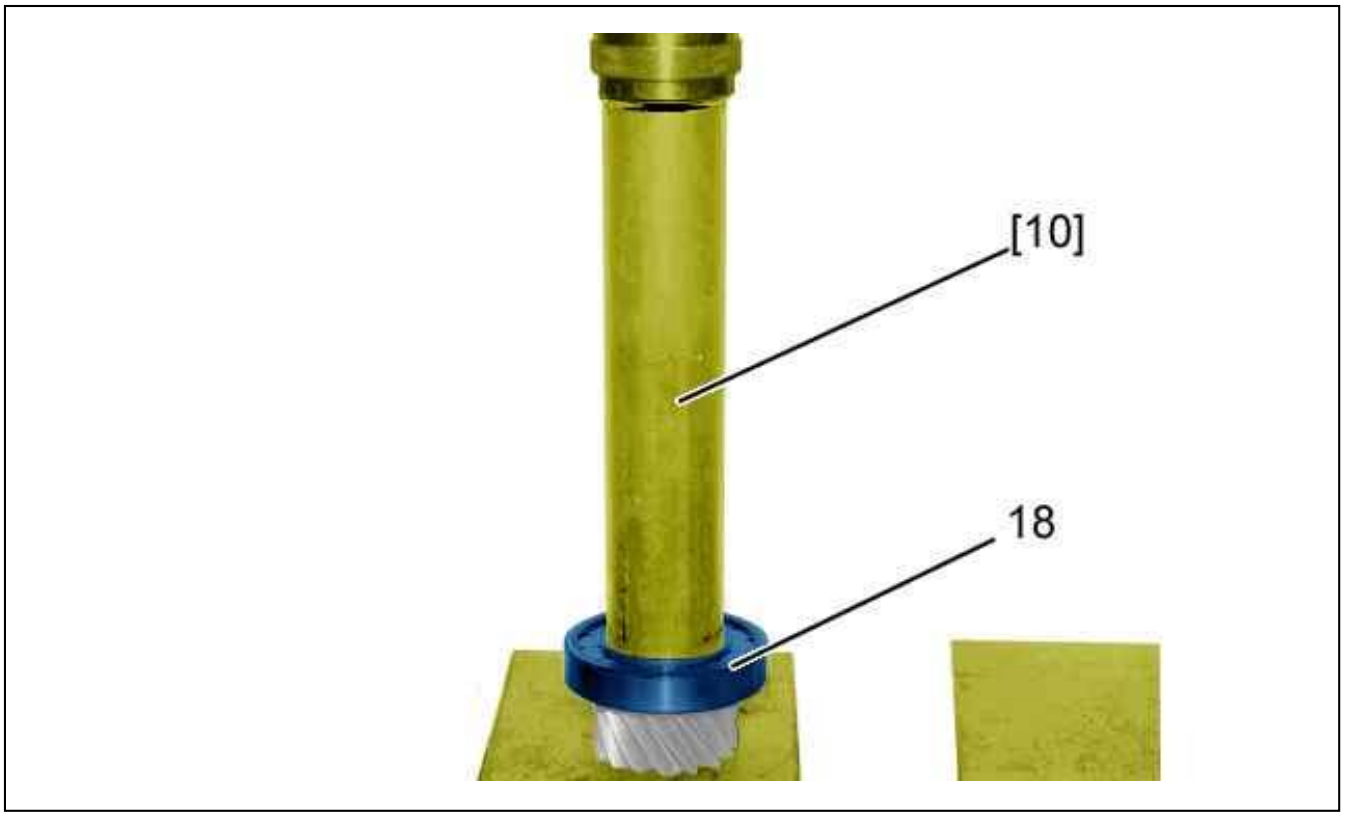

Figure : B2CM03XD

Fit the bearing (18) ; Using tool [10] and press .

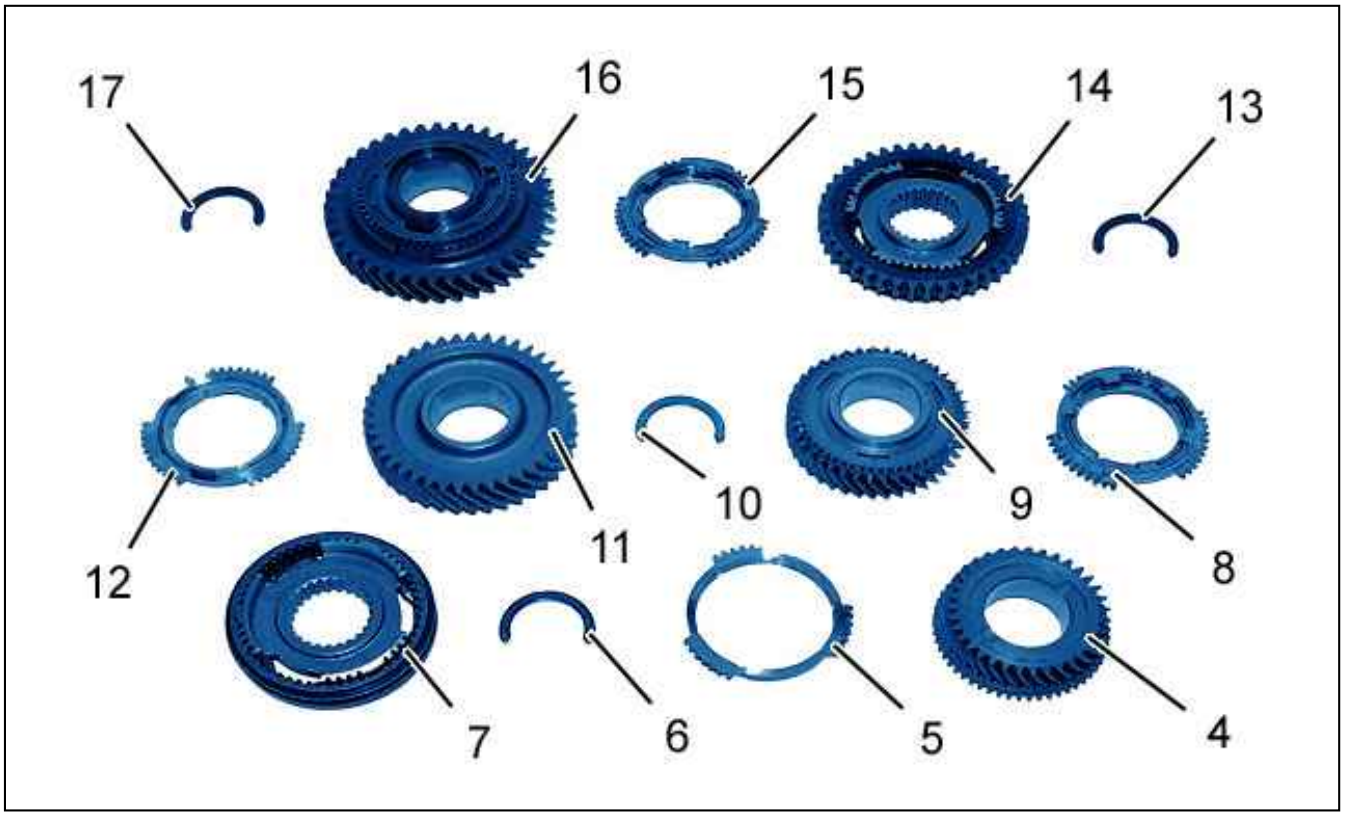

Figure : B2CM03YD

Refit :

- The stop ring (17) ; Using tool [3]

- 1st speed gear (16)
- The 1st speed gear synchronizer ring (15)
- The 2nd 1st clutch engagement sleeve assembly (14)
- The stop ring (13) ; Using tool [3]
- 2nd speed gear synchronizer ring (12)
- 2nd speed gear (11)
- The stop ring (10) ; Using tool [3]
- The 3rd speed gear (9)
- 3rd speed gear synchronizer ring (8)
- The 3rd 4th clutch engagement sleeve assembly (7)
- The stop ring (6) ; Using tool [3]
- 4th speed gear synchronizer ring (5)
- The 4th speed gear (4)

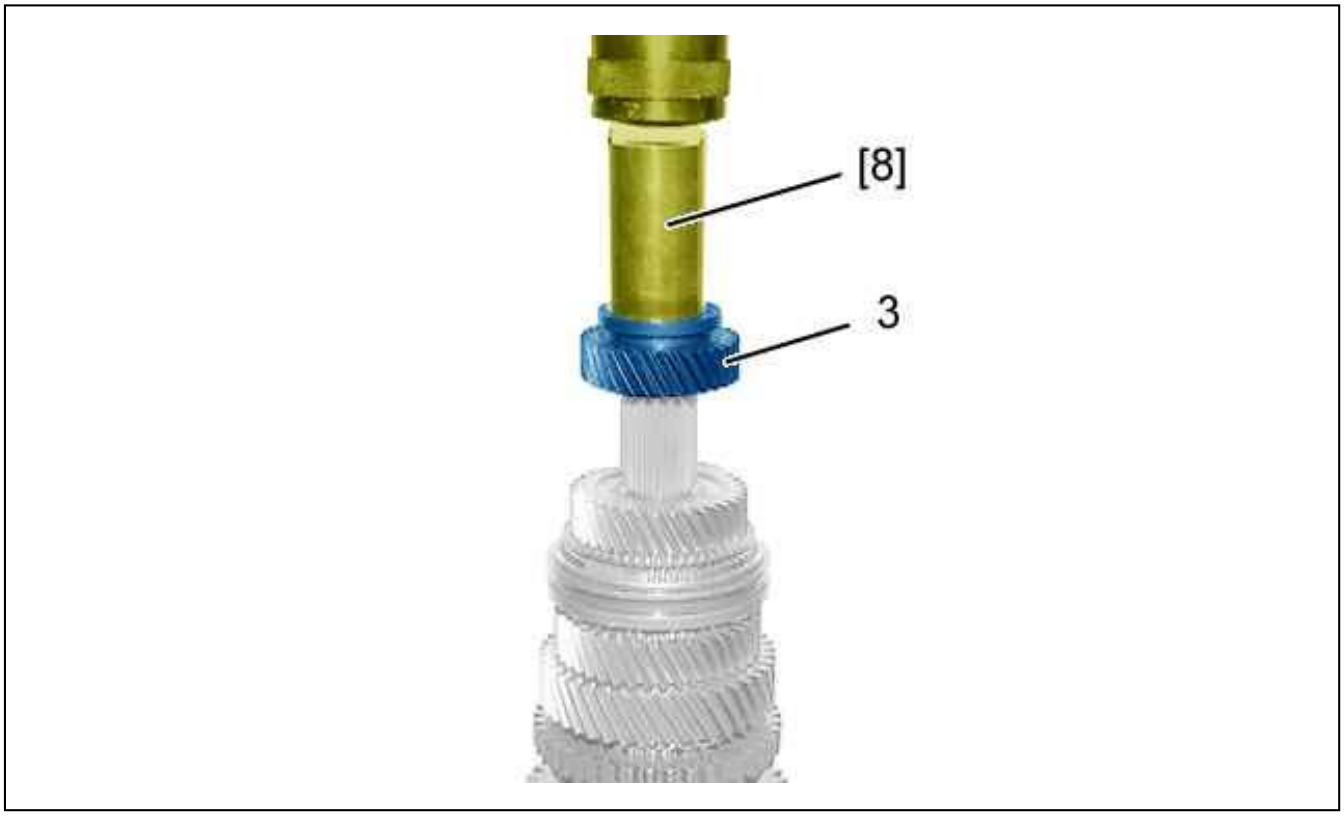

Figure : B2CM03ZD

Refit : 5th speed gear (3) ; Using tool [8] and press .

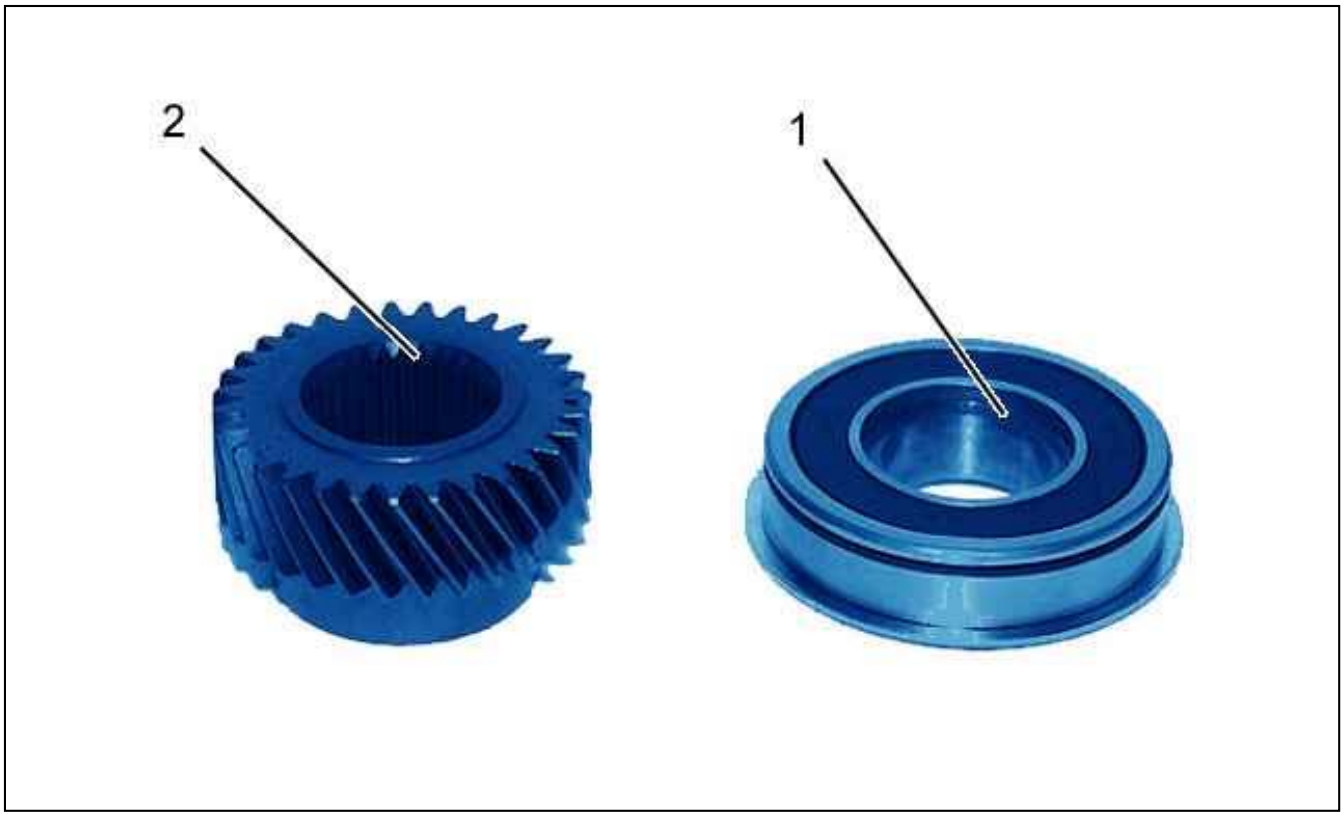

Figure : B2CM040D

CAUTION : Fit the bearing the right way round : Open groove opposite the gears .

Refit ; Using tool [8] and press :

- The 6th gear pinion (2)
- The 6th gear bearing (1)

N.B. : If the force required to fit the 5th and 6th gear pinions is less than 500 daN ; Procedure for replacing parts.

3. Gearbox control plate

3.1. Stripping

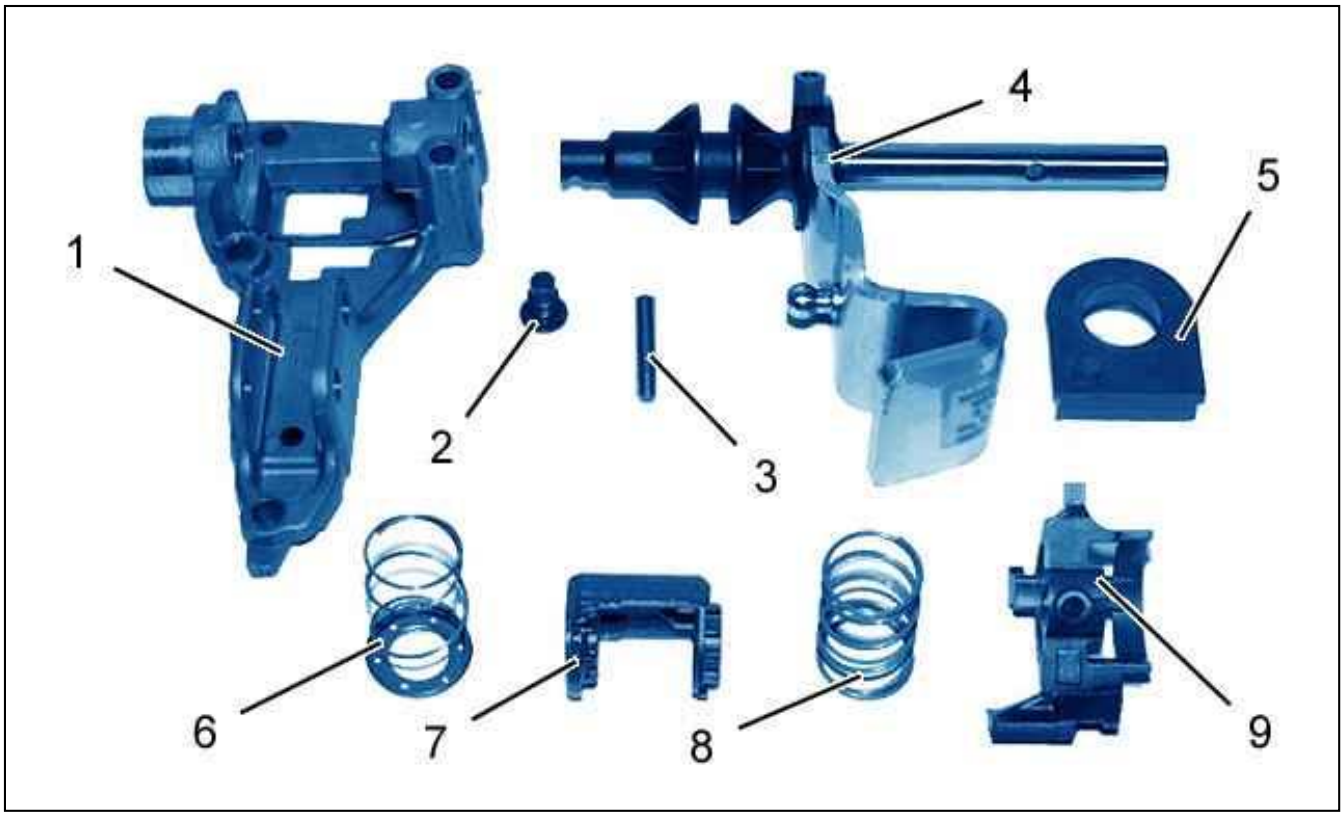

Figure : B2CM041D

Immobilise the control mounting (1) in a vice.
Remove :

- The (2) bolt
- The pin (3)
- Shaft (4) and its seal (5)
- The spring (6)
- The spacer (7)
- The return spring (8)
- The gear engagement finger (9)

3.2. Re-assembling

Carry out the re-trim operations in the reverse order to the stripping operations.
Tightening of the bolt (2) to 2 daN.m.

4. Differential housing

4.1. Stripping

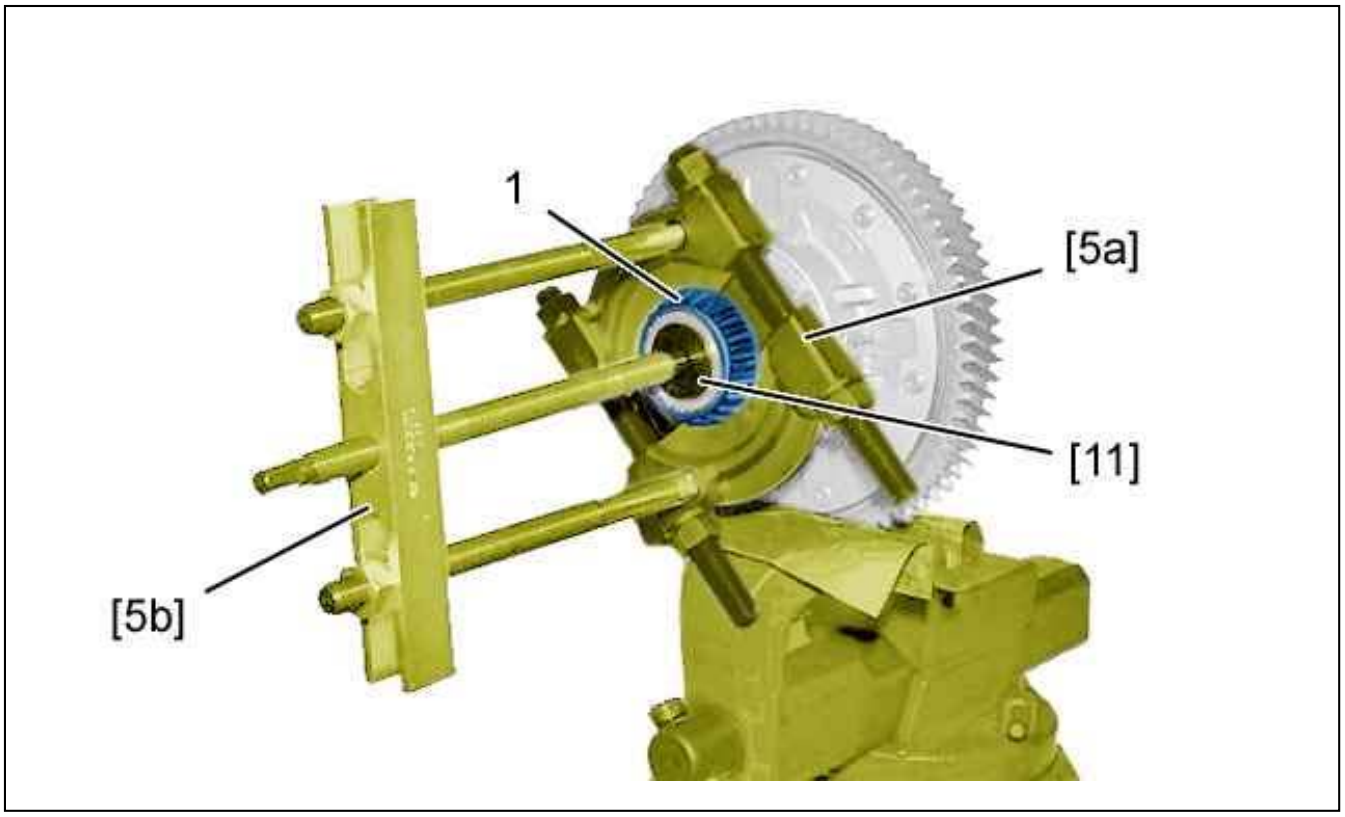

Figure : B2CM042D

Remove the bearing (1) ; Using the tools [5a], [5b], [11].

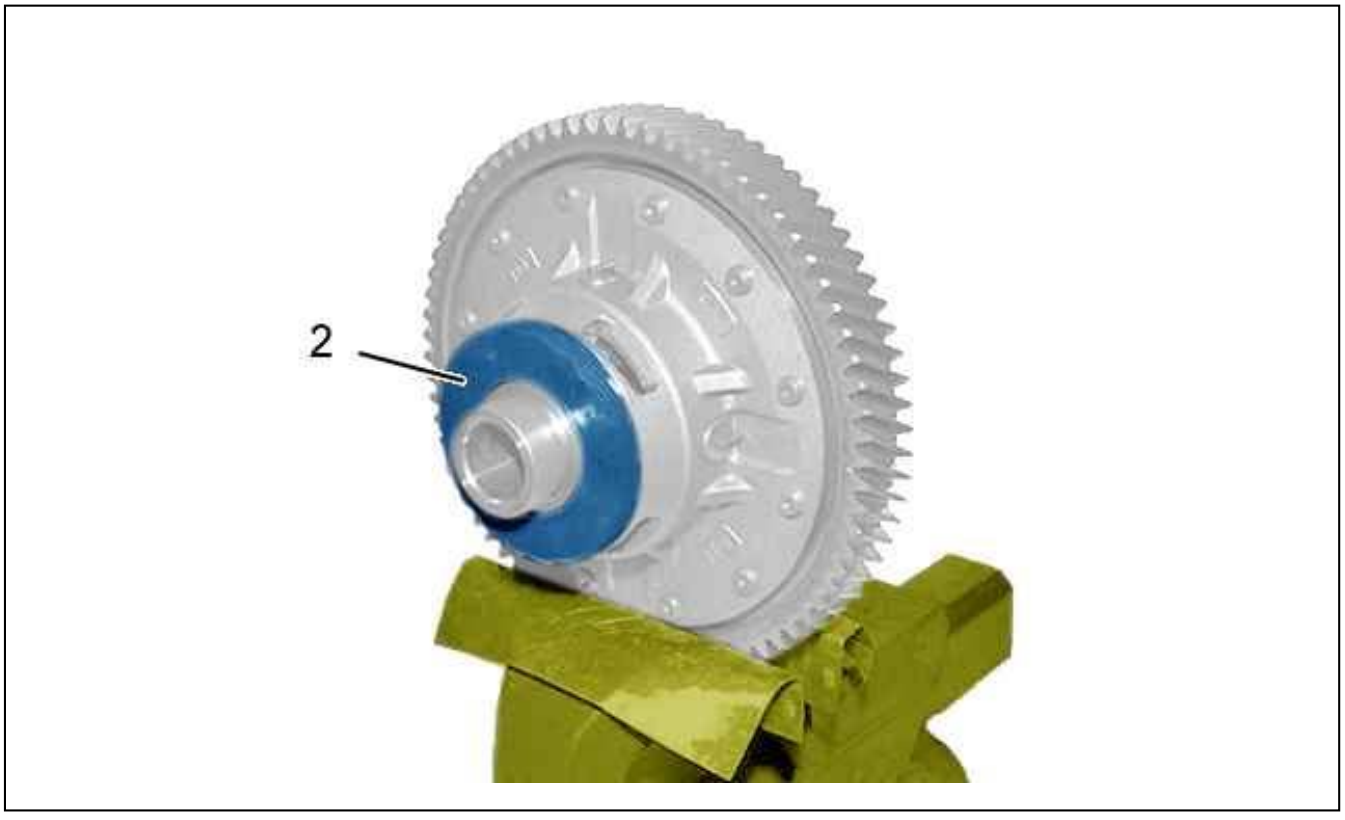

Figure : B2CM043D

Remove the speedometer drive gear (2).

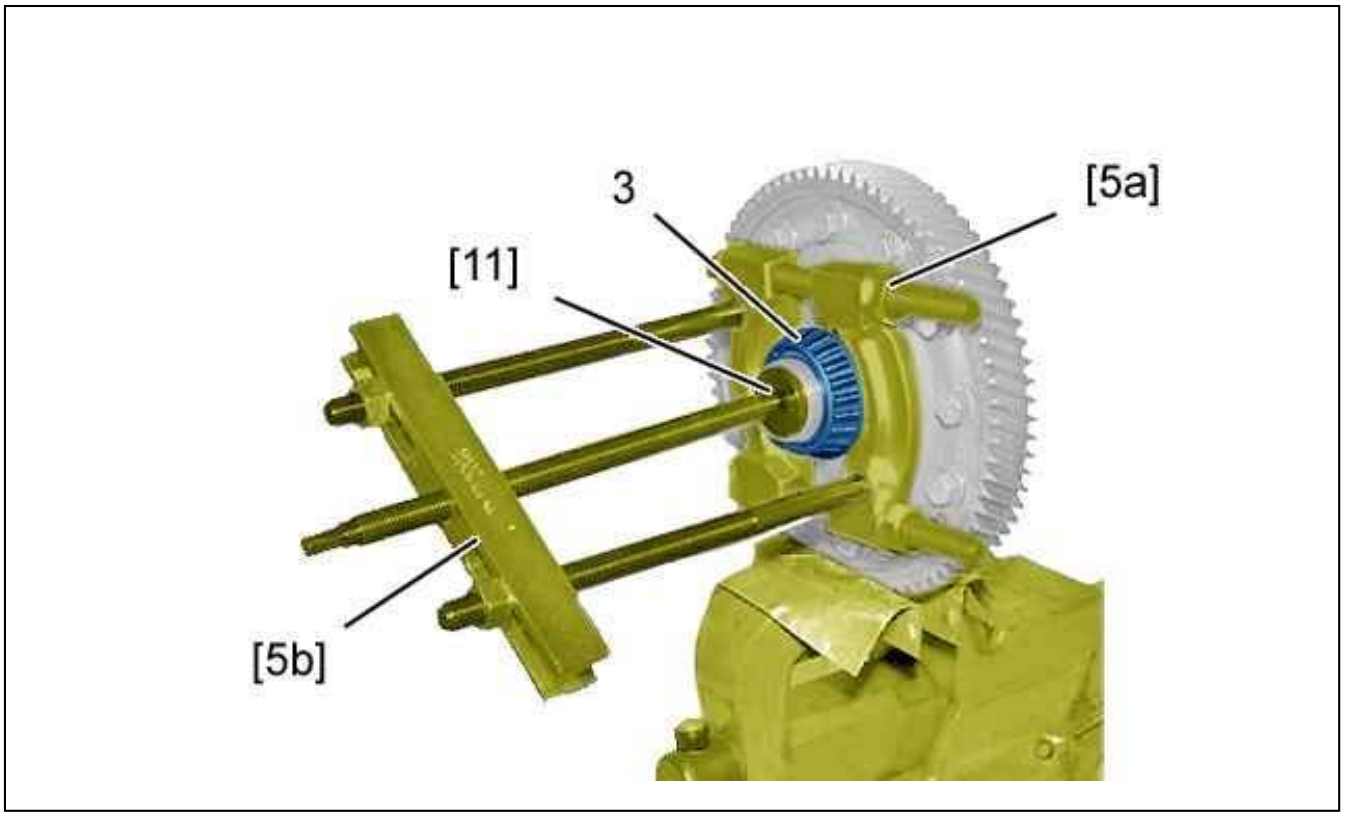

Figure : B2CM044D

Remove the bearing (3) ; Using the tools [5a], [5b], [11].



Figure : B2CM045D

Remove the fixing screws (differential box) (4).

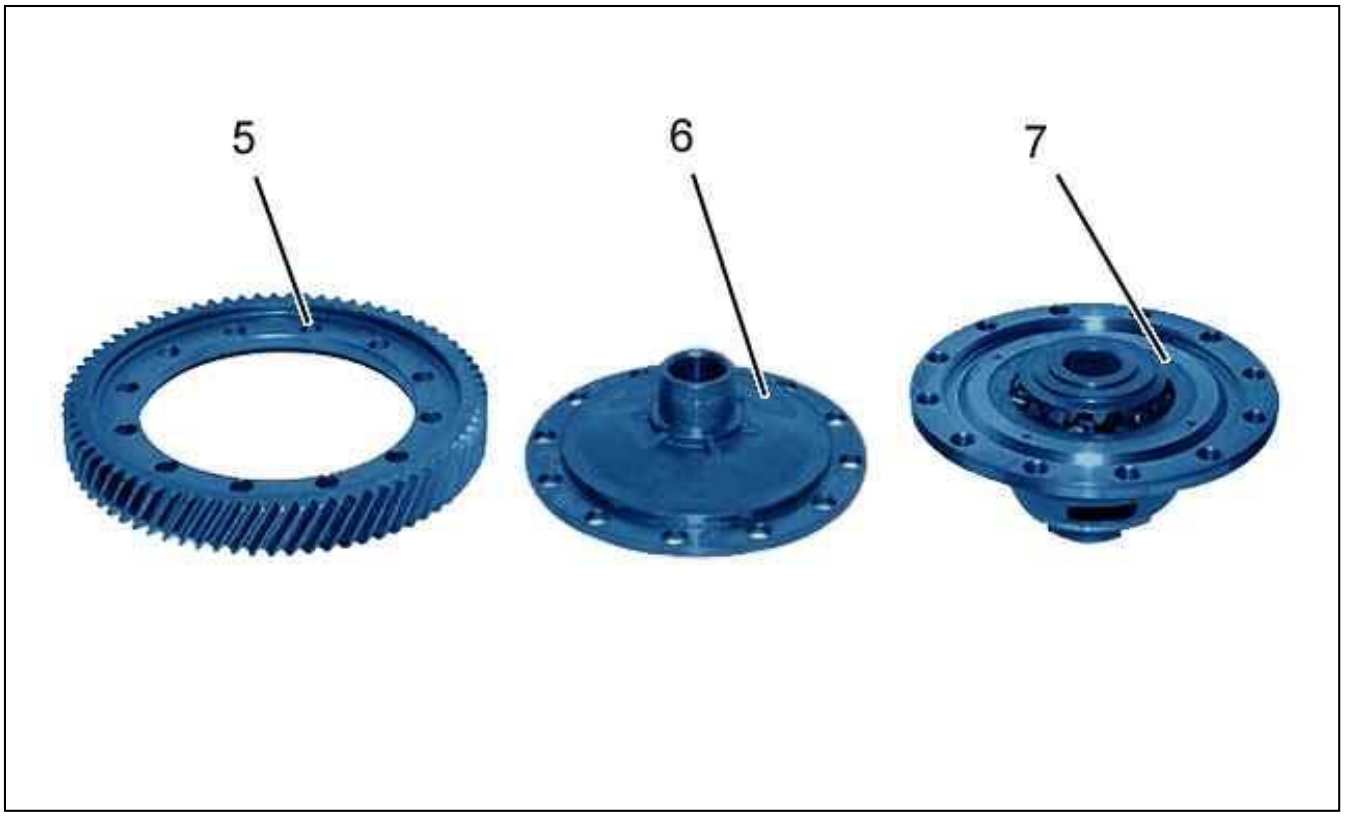

Figure : B2CM046D

Separate the following parts :

- Differential crown wheel (5)
- The flange (6)
- Satellite pinion holder casing (7)

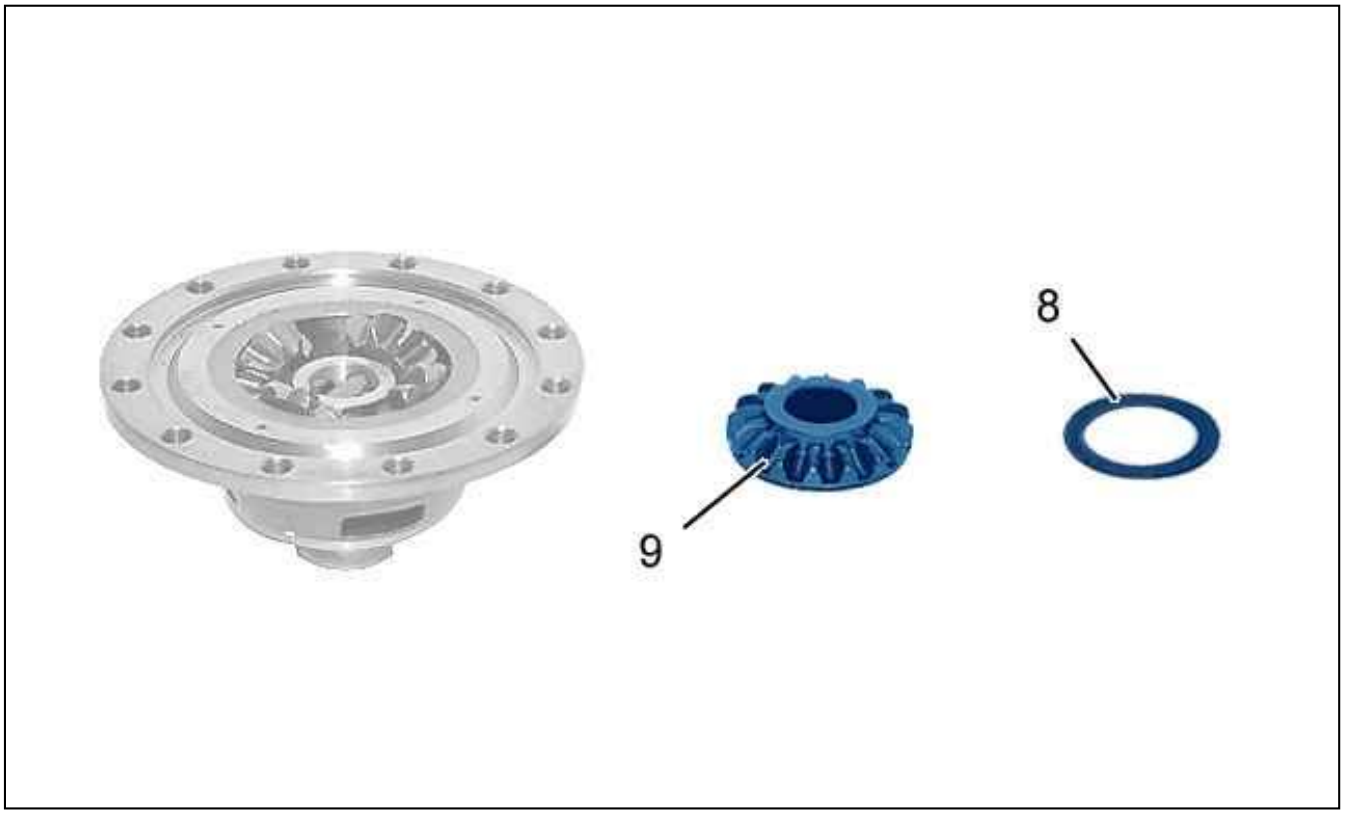

Figure : B2CM047D

Remove :

- The friction washer (8)
- The sun wheel (9)



Figure : B2CM048D

Drive out the 4 roll pins (10).

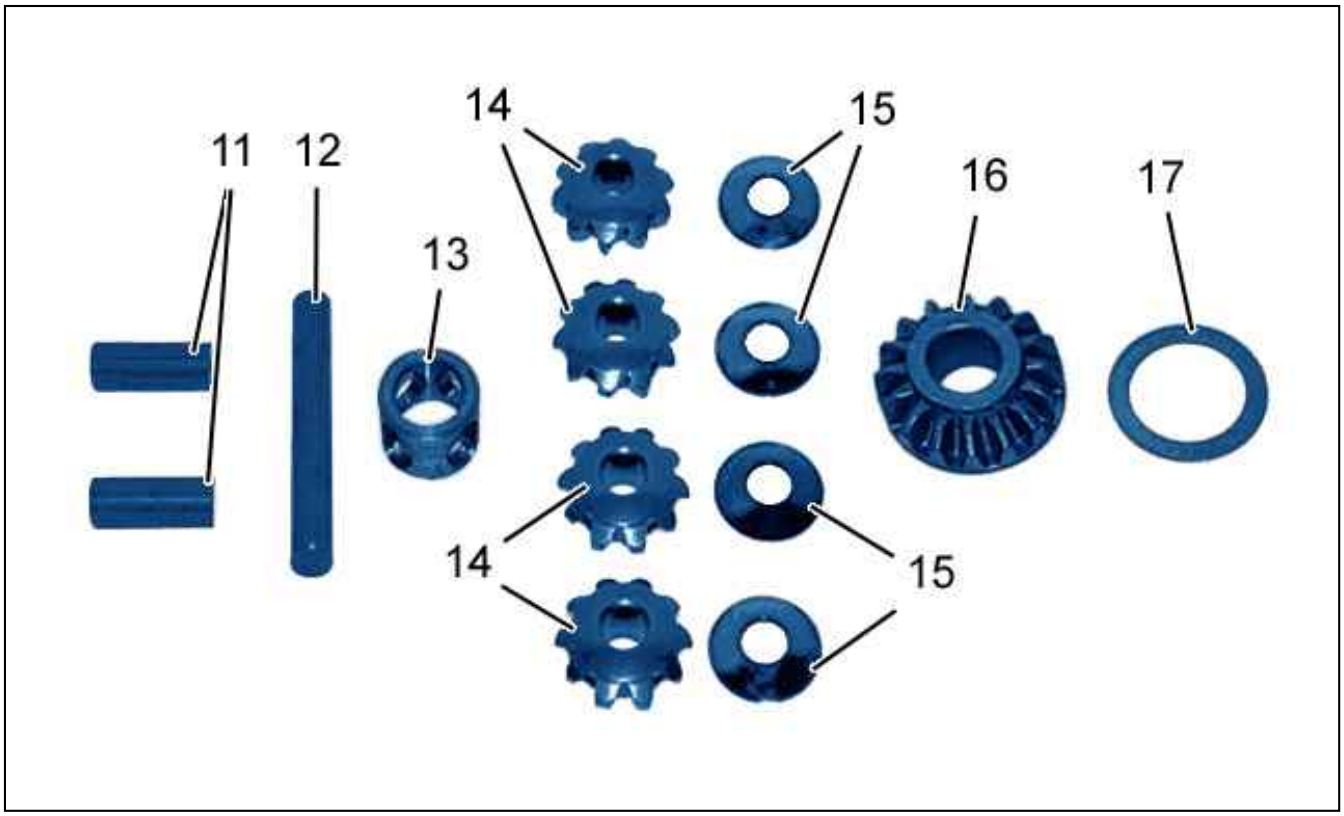

Figure : B2CM049D

Remove :

- The half-shafts (11) and the shaft (12)
- Centre part (13)
- The planet cage (14)
- The friction cups (15)
- The sun wheel (16)
- The friction washer (17)

4.2. Re-assembling

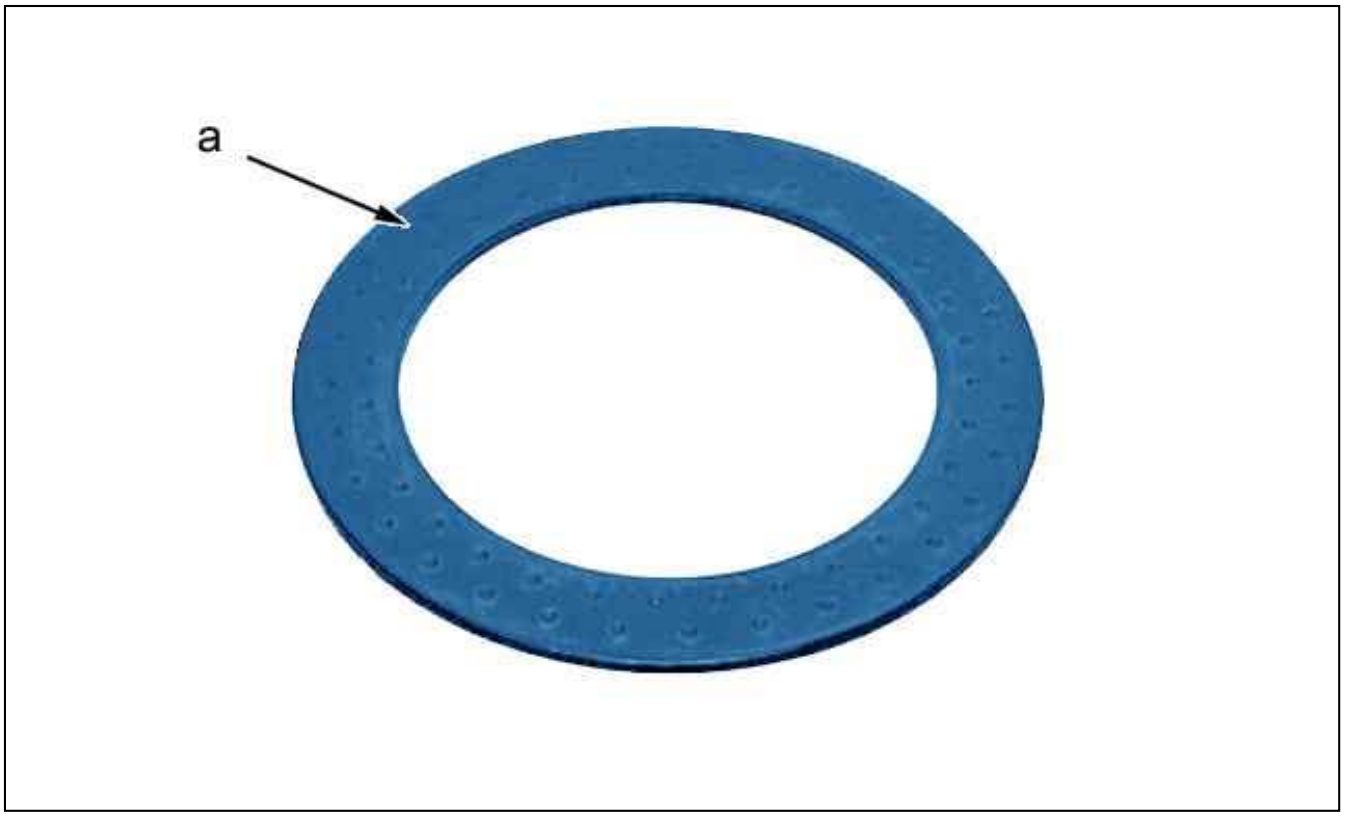

Figure : B2CM04AD

ESSENTIAL : Fit the coppered and indented face "a" of the friction washers (8) and (17) on the sun wheel side.

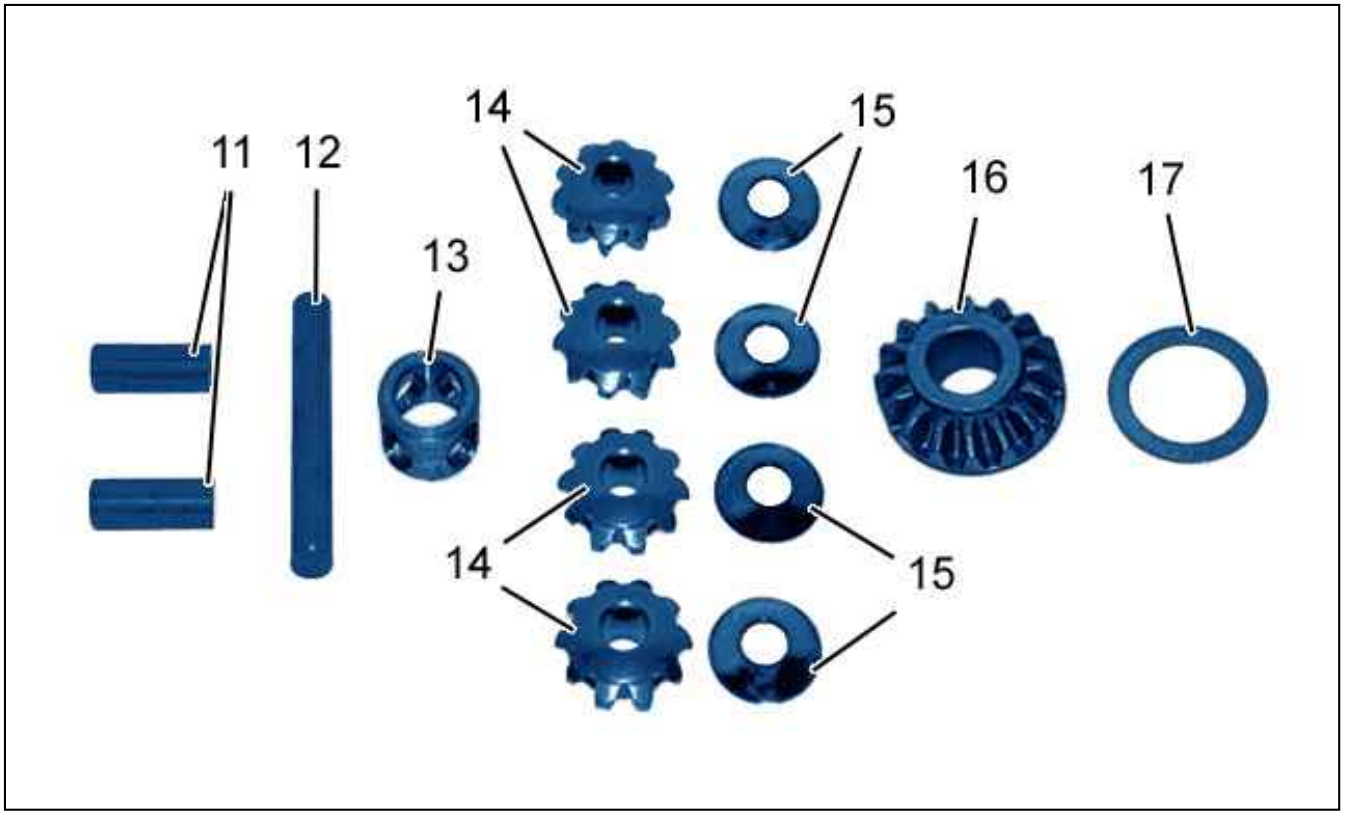

Figure : B2CM049D

Refit in the sun wheel carrier unit (7) :

- A friction washer (17) thick : 1,6 mm
- The sun wheel (16)
- The cups (15)
- The planet cage (14)
- Centre part (13)
- The shaft (12) and the half-shafts (11)

Check the refitted parts rotate freely.
Turn the assembly carefully.

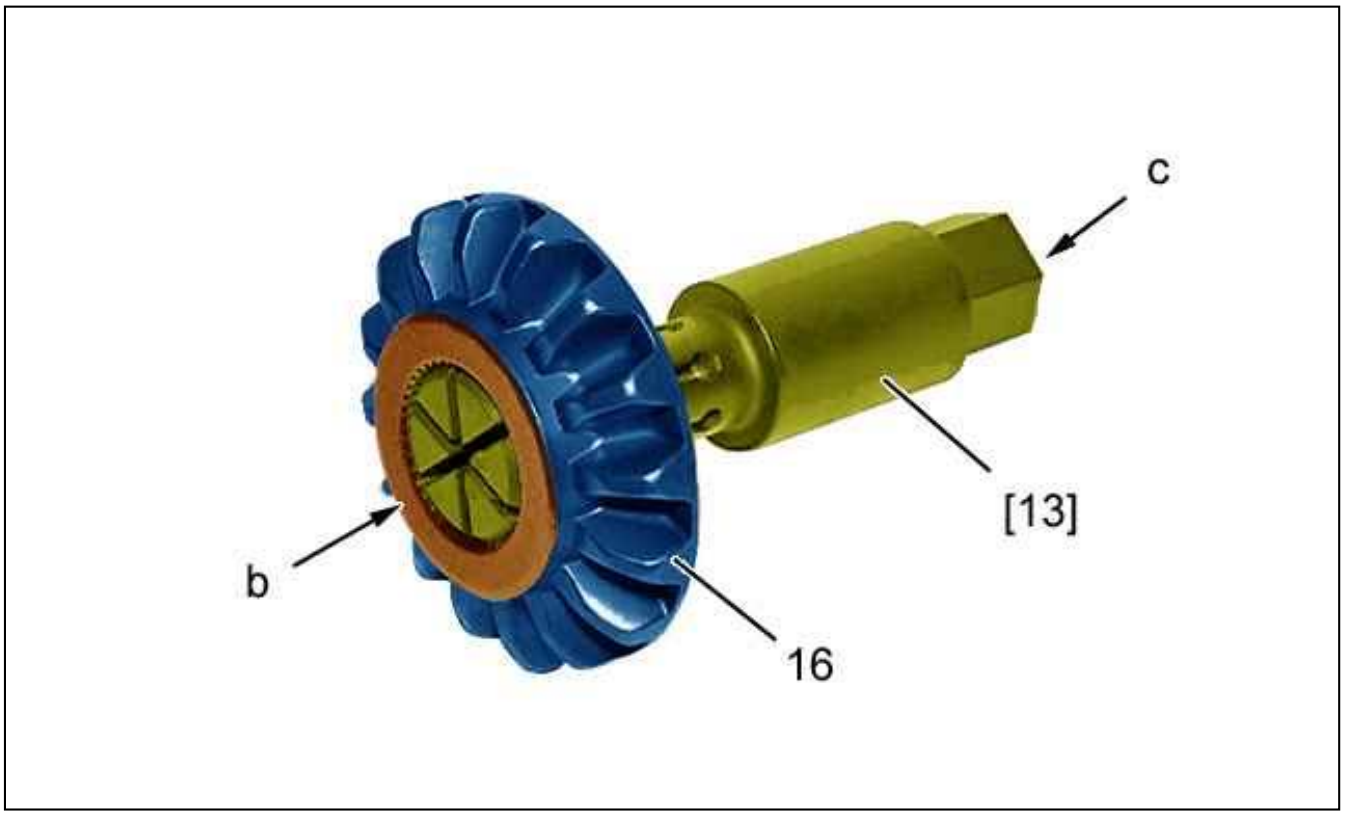

Figure : B2CM04BD

Position the tool [13].
For fitting on the sun wheels (16), the tool [13] must not protrude from the sun wheel at "b" and will be immobilised using the internal bolt "c".

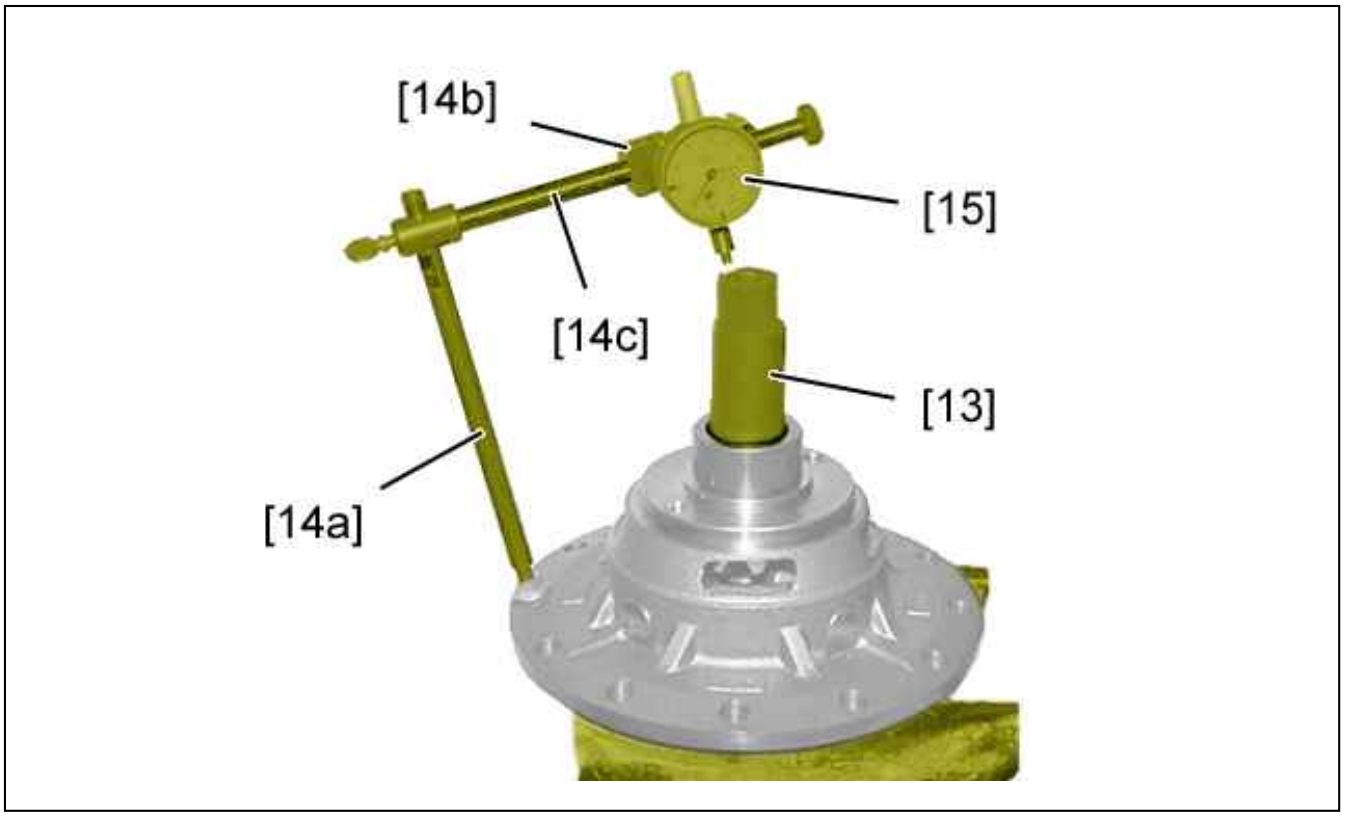

Figure : B2CM04CD

Put into place the following tools :

- The expanding mandrel [13]
- The dial gauge support rod [14a] ; Using the 2 nuts ; Pinch the satellite carrier unit
- The dial gauge support rod [14c]
- The dial gauge support [14b]
- The dial gauge [15]

Rotate the assembly several times ; Using tool [13].
Set the dial gauge to zero.
Take 4 measurements at ? 90? of the clearance operating tool [13] vertically.

CAUTION : Maximum axial play 0,1 mm ; If the result of the measurement is above this value, replace the frictior washer to obtain the correct clearance.

N.B. : The friction washers are available in 7 different thicknesses : 1,55 ; 1,60 ; 1,65 ; 1,70 ; 1,75 ; 1,80 ; 1,85 mm.

Remove the tools [13], [14a], [14b], [14c], [15].

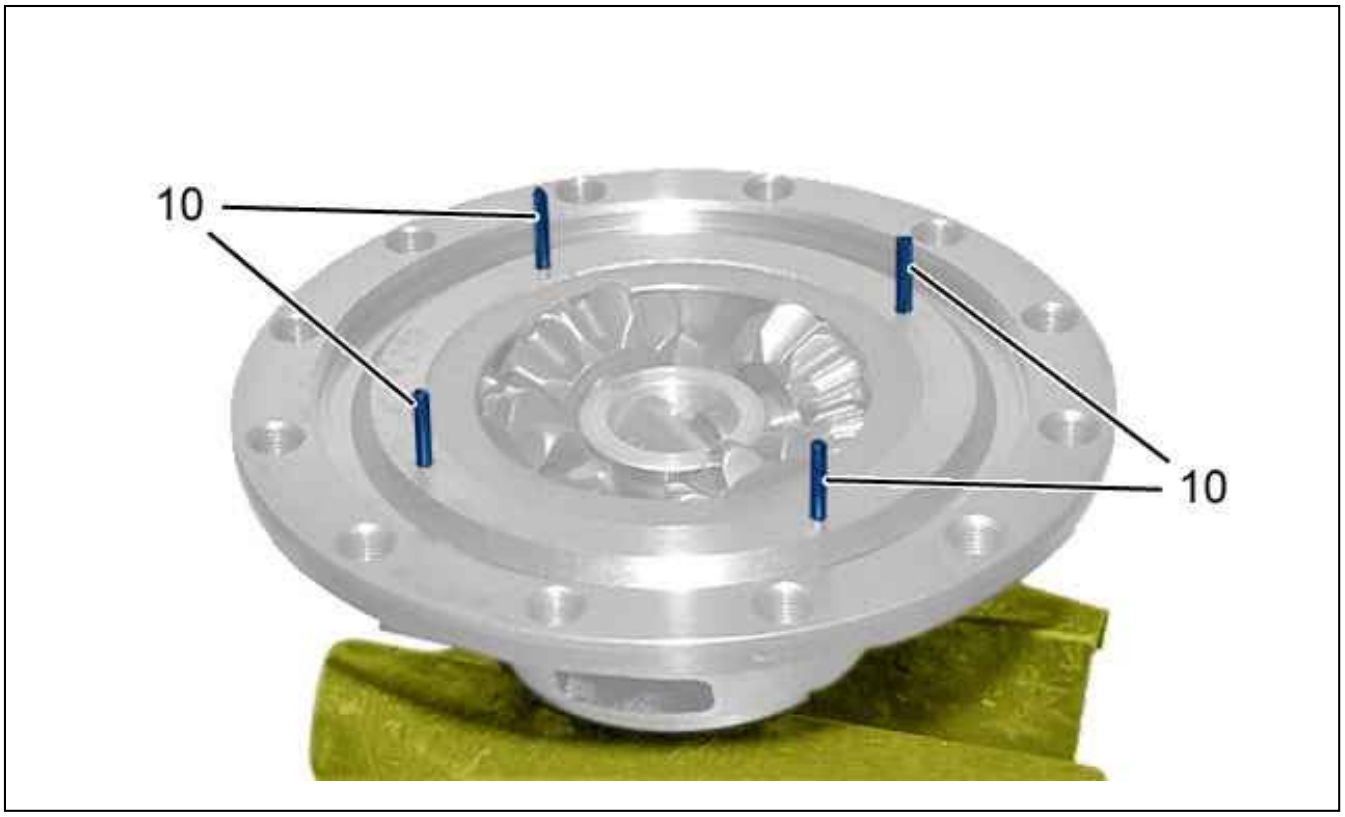

Figure : B2CM04DD

Fit the 4 roll pins that lock the shafts (10).

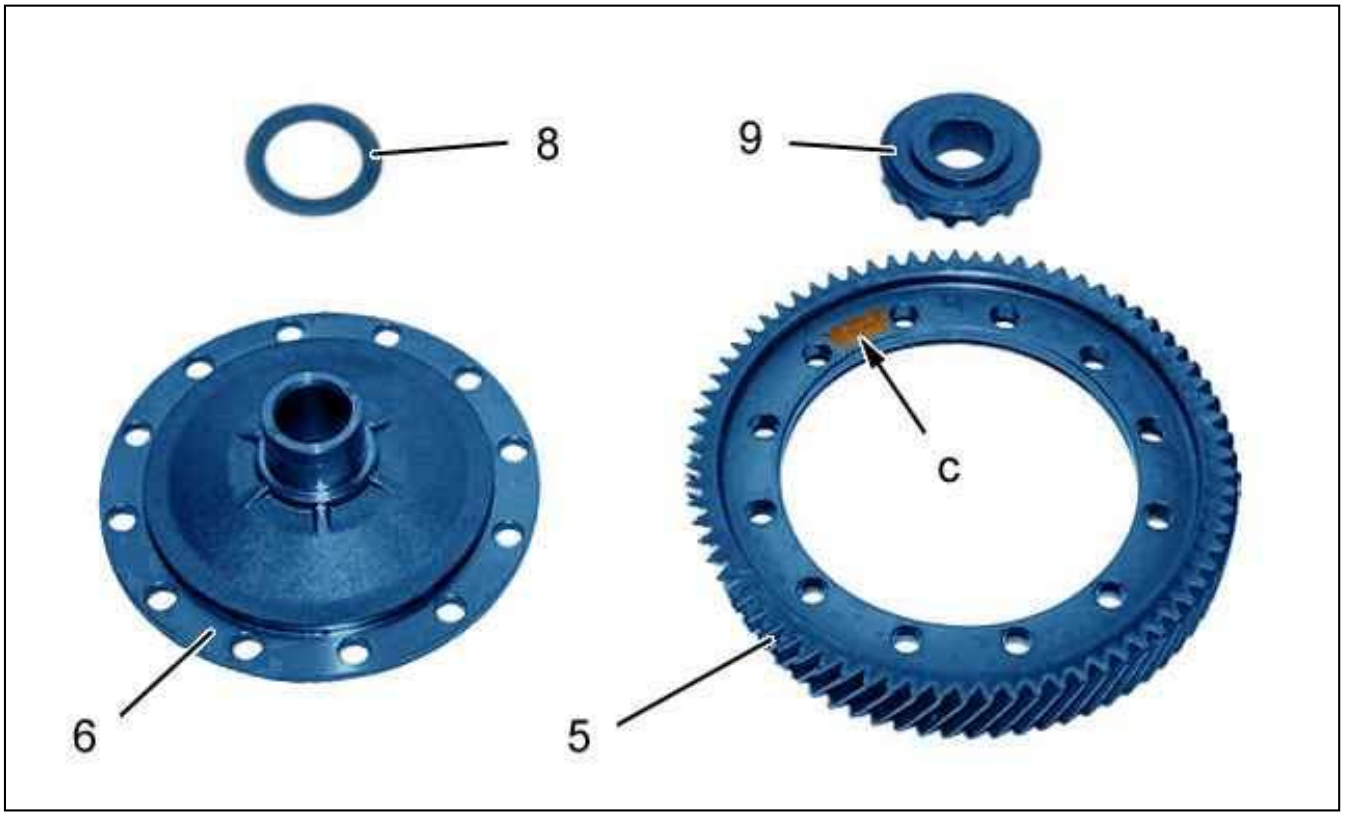

Figure : B2CM04ED

Refit :

- The sun wheel (9)

- A friction washer (8) thick : 1,6 mm
- The flange (6)
- Differential crown wheel (5) (Mark "c" visible)

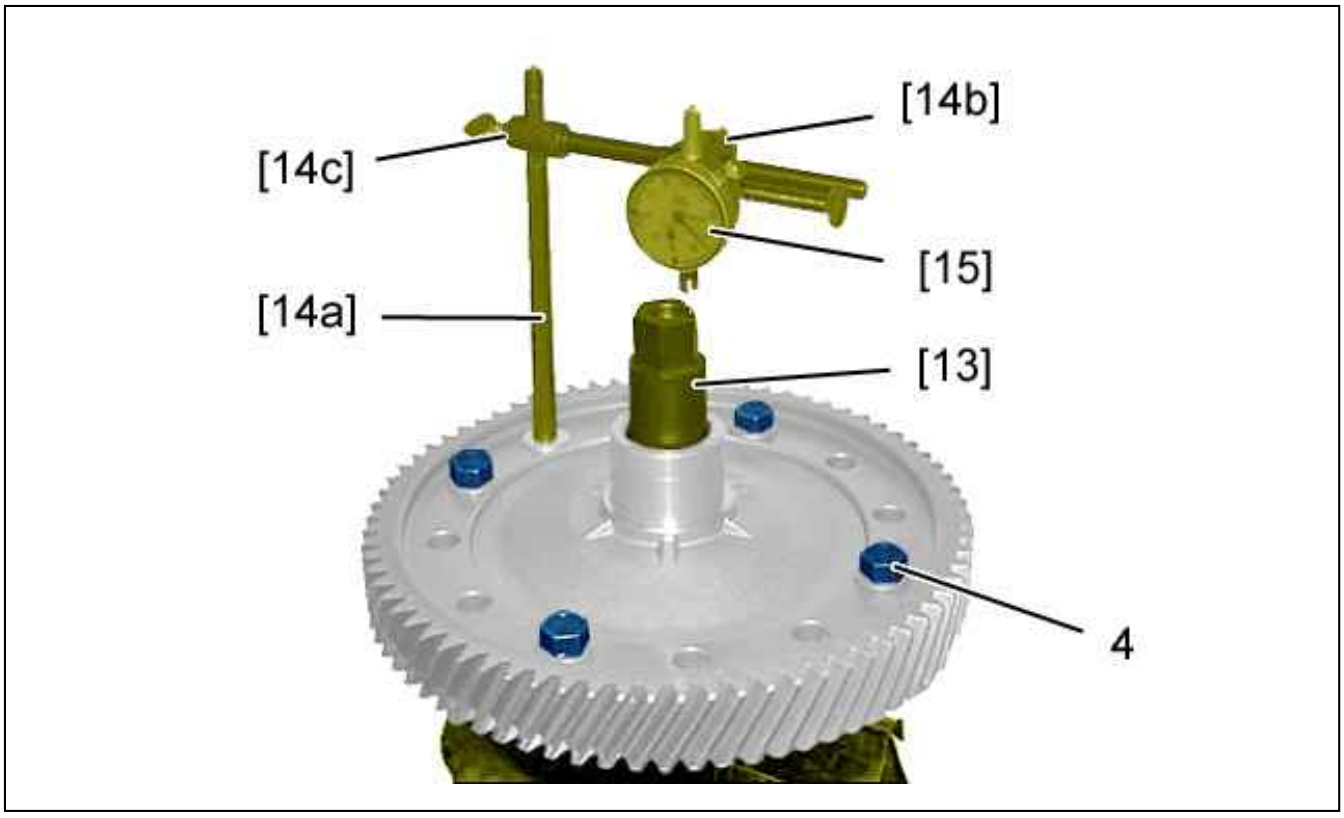

Figure : B2CM04FD

Refit and tighten : The 4 securing bolts (differential box (4)).
Tightening method for the screws (4) :

- Pre-tightening to 2,2 ± 0,1 daN.m
- Angular tightening of 55 ± 1,5 °

Put into place the following tools :

- The expanding mandrel [13]
- The dial gauge support rod [14a] ; Using a washer and a nut ; Pinch the differential carrier
- The dial gauge support rod [14c]
- The dial gauge support [14b]
- The dial gauge [15]

Rotate the assembly several times ; Using tool [13].
Set the dial gauge to zero.
Take 4 measurements at ? 90? of the clearance operating tool [13] vertically.

CAUTION : Maximum axial play 0,1 mm ; If the result of the measurement is above this value, replace the frictior washer to obtain the correct clearance.

N.B. : The friction washers are available in 7 different thicknesses : 1,55 ; 1,60 ; 1,65 ; 1,70 ; 1,75 ; 1,80 ; 1,85 mm.

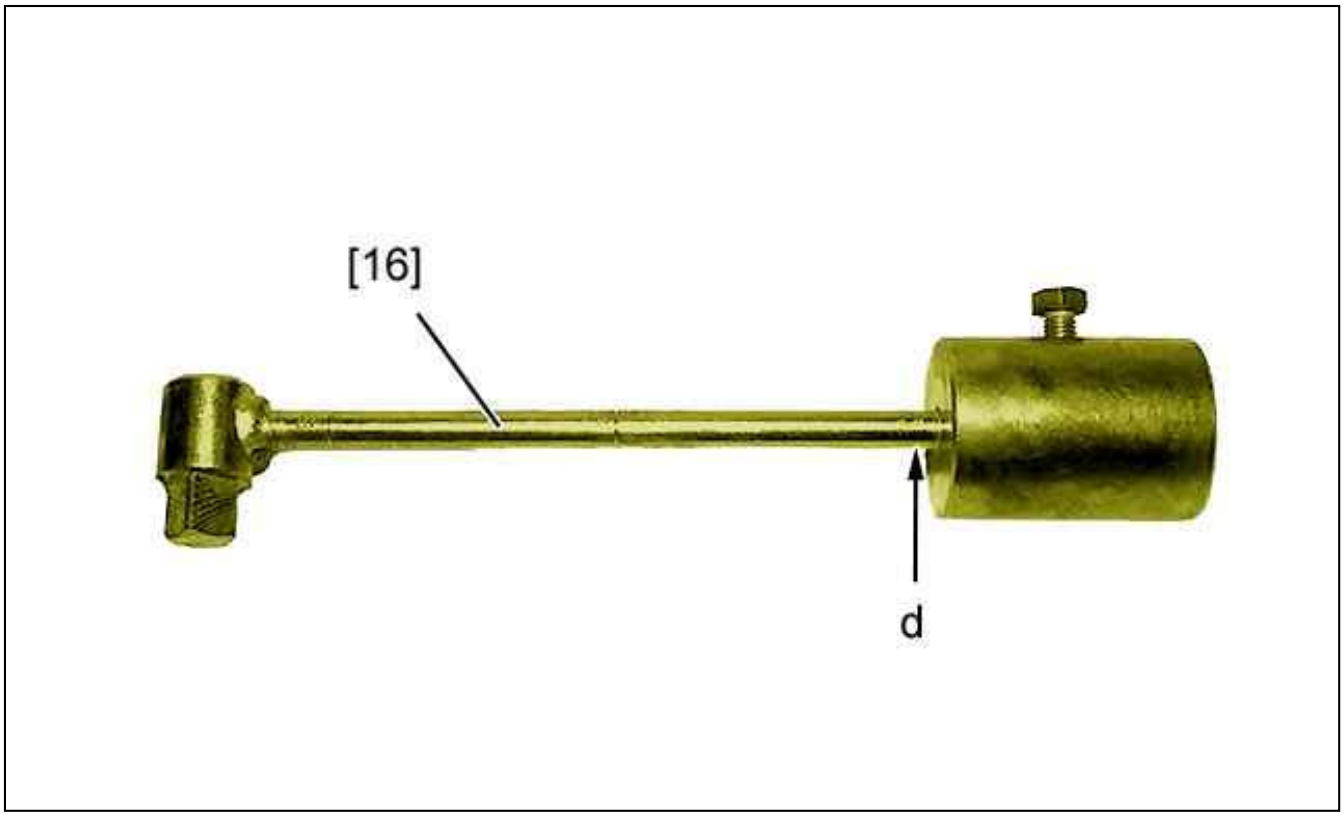

Figure : B2CM04GD

Set tool [16] to mark 0,15.

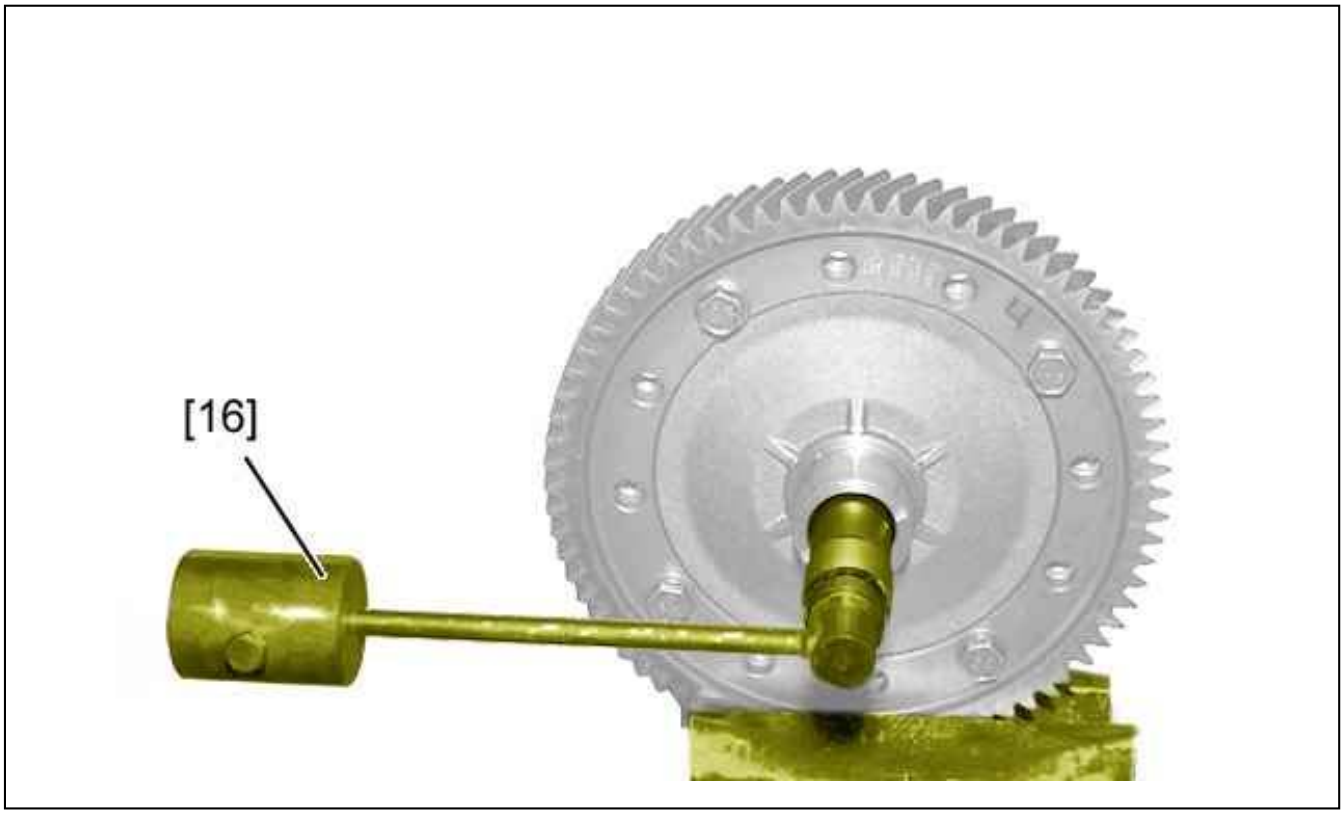

Figure : B2CM04HD

Immobilise the limited slip differential housing in a vice.
Position tool [16] to check the preadjusted drag torque.

Check the drag torque.

CAUTION : If the torque is above 15 daNm (no rotation of the checking tool), increase the clearance on the sun whee on which you read the lowest clearance during the adjustments.



Figure : B2CM045D

Refit : The 12 securing bolts (4) (differential box).
Tightening method for the screws (4) :

- Pre-tightening to 2,2 ± 0,1 daN.m
- Angular tightening of 55 ± 1,5 °

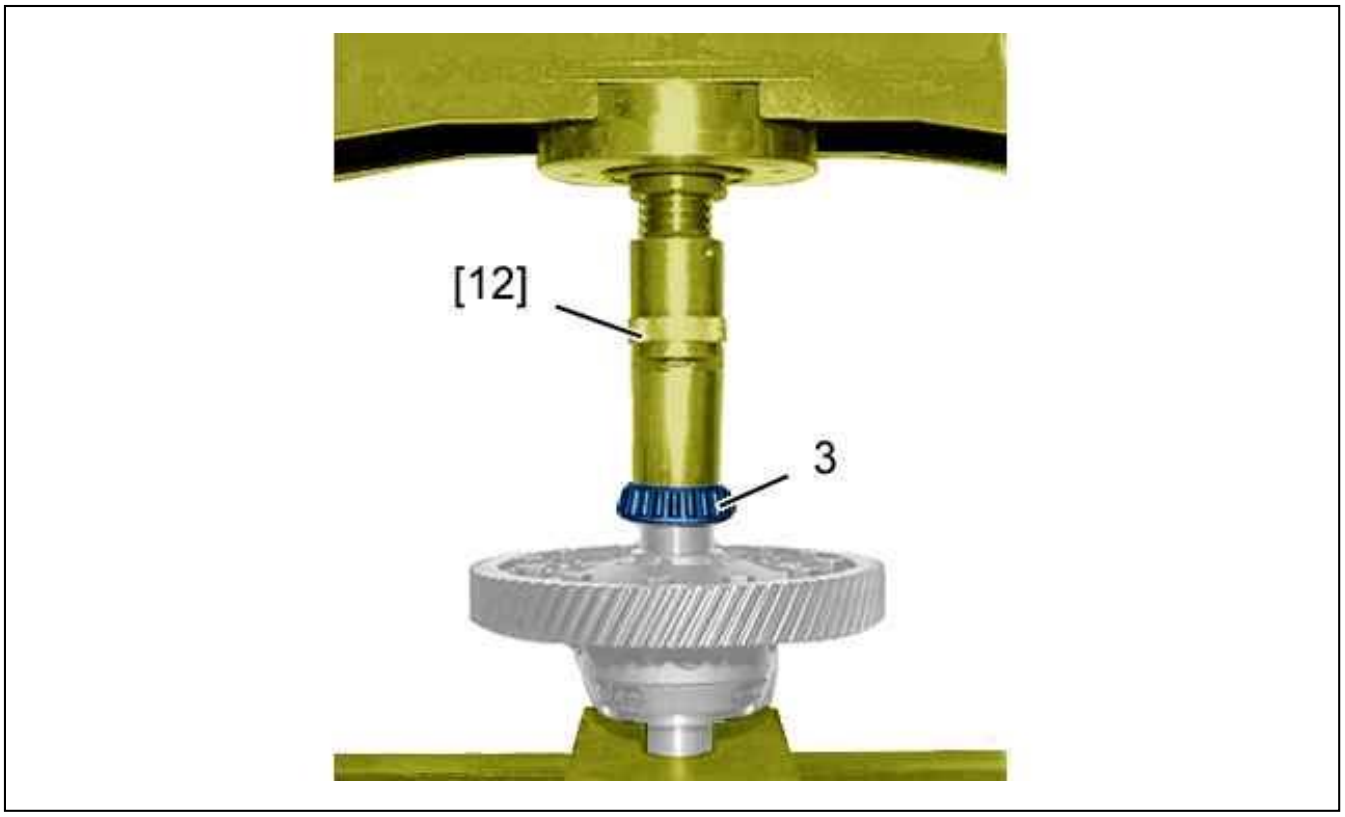

Figure : B2CM04JD

Fit the bearing (3) ; Using tool [12] and press .

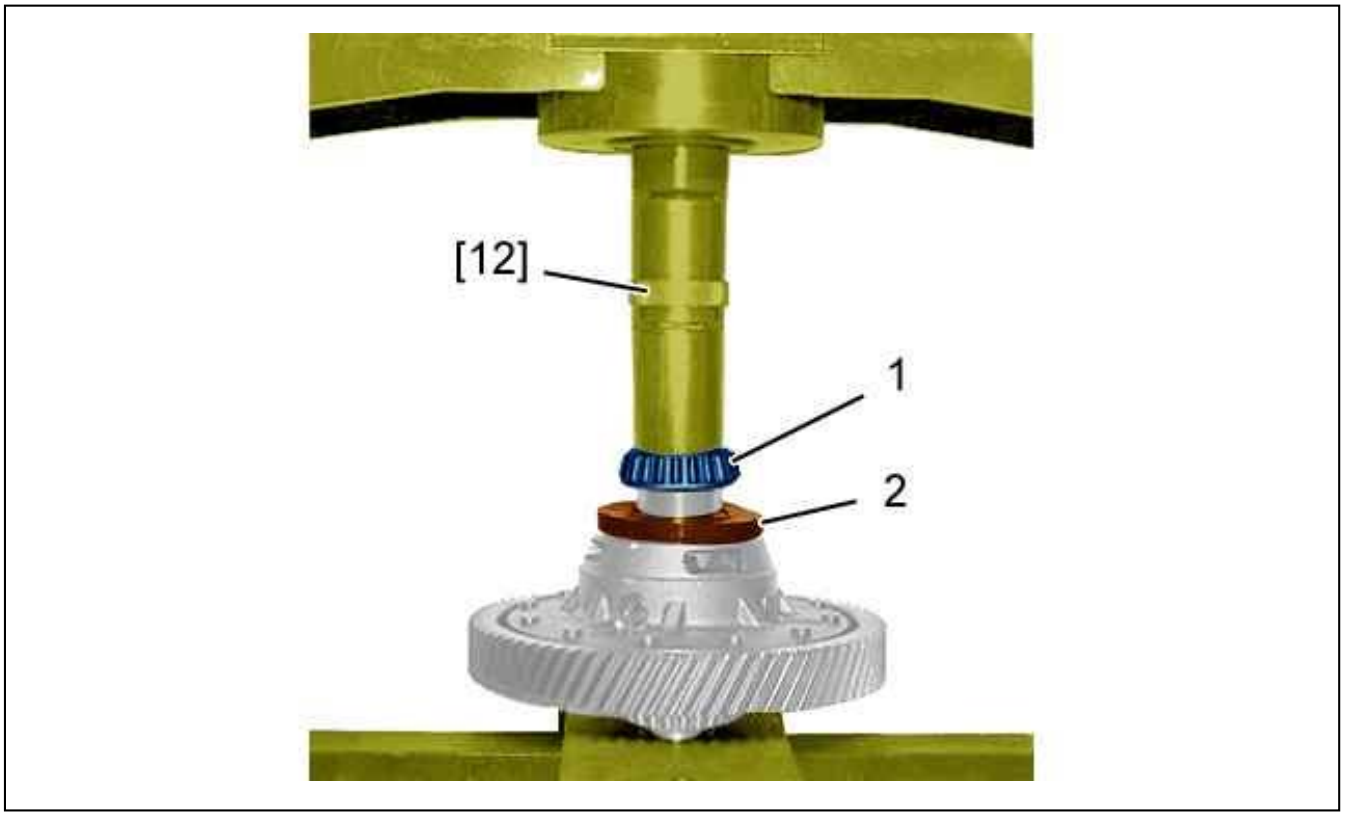

Figure : B2CM04KD

Refit :

- The speedometer drive gear (2)

- The bearing (1) ; Using tool [12] and press

5. Casing

5.1. Gearbox casing

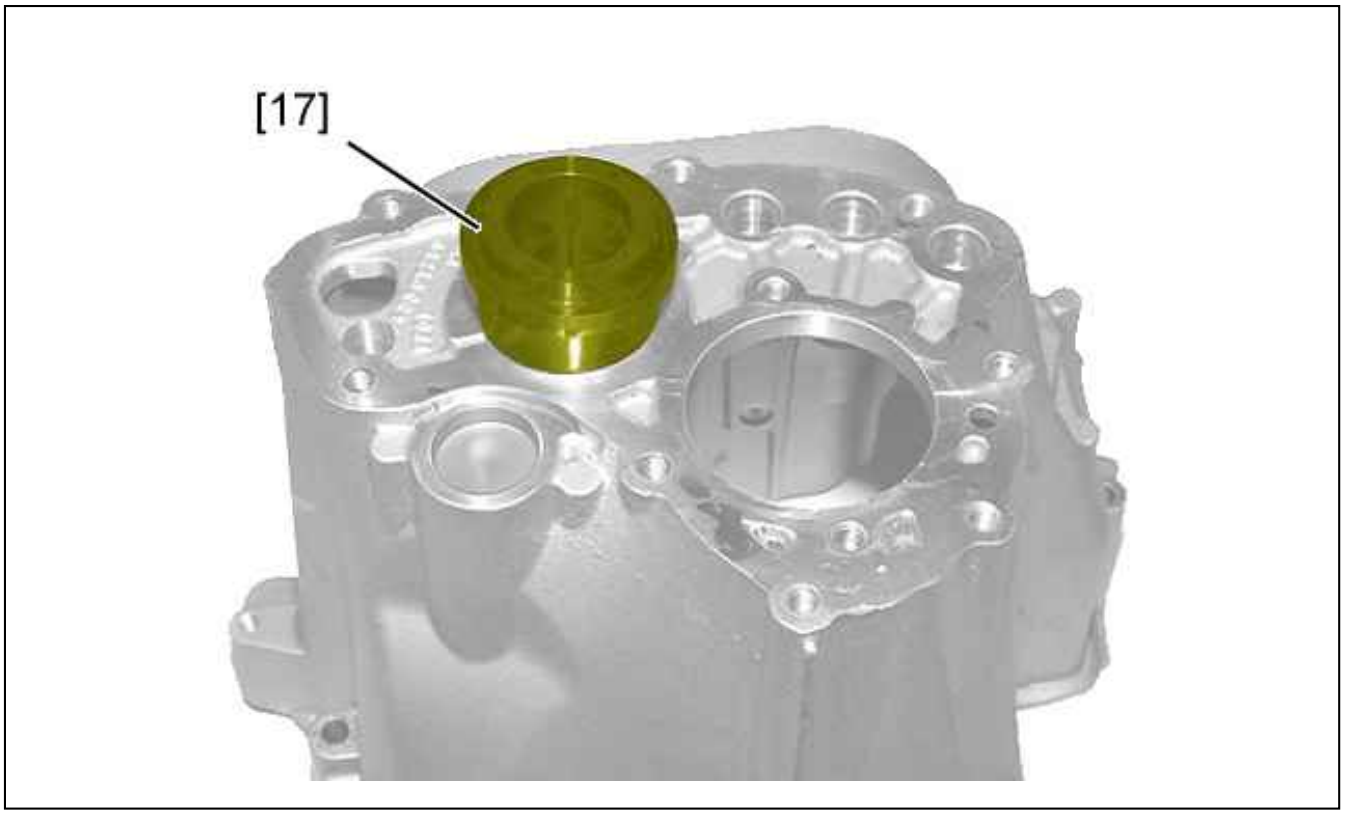

Figure : B2CM04LD

Remove : The external cage of the main shaft bearing (6th gear end) ; Using tool [17] and press .
Retrieve the adjusting shim .

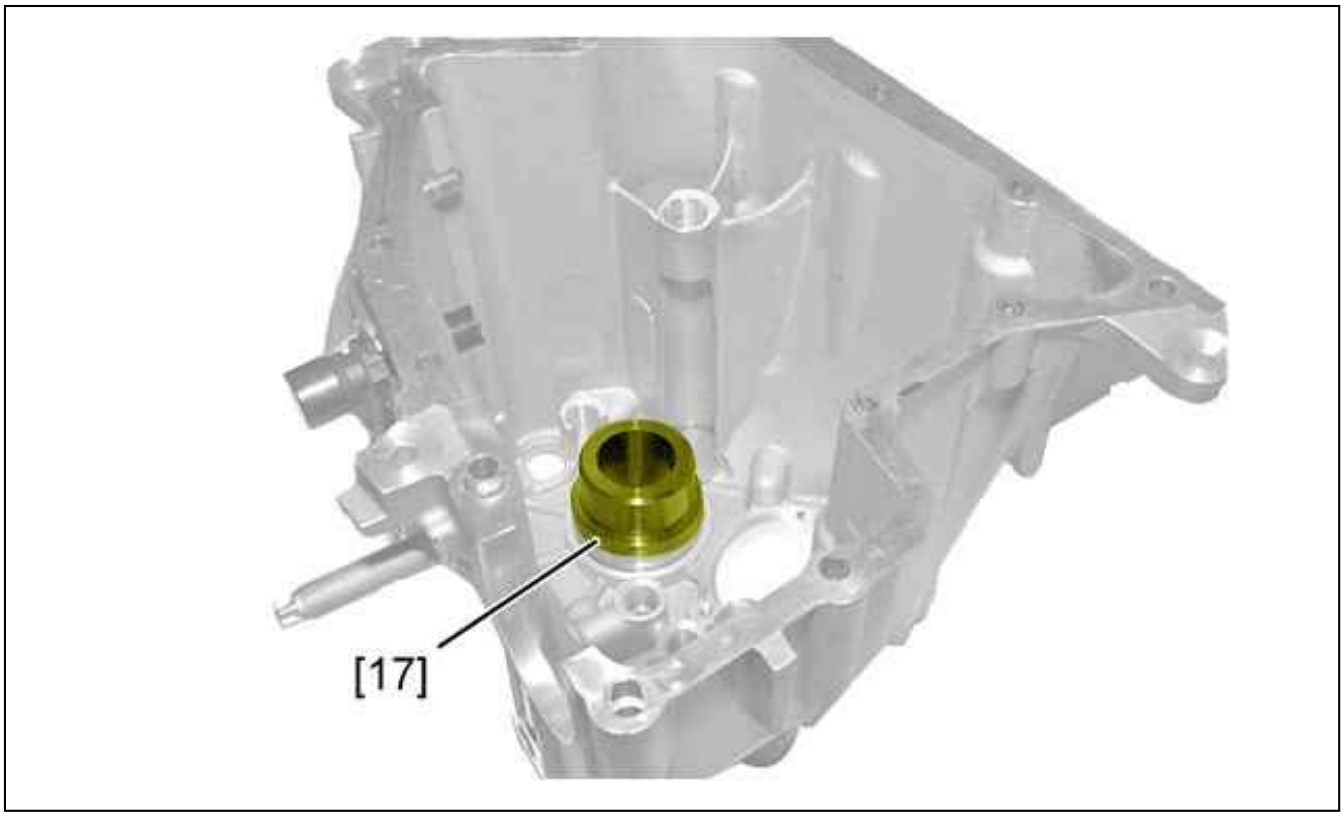

Figure : B2CM04MD

Refit :

- An adjustment shim
- The external cage of the main shaft bearing (6th gear end) ; Using tool [17] and press

N.B. : The adjustment shim must compensate for the clearance as far as possible (Supplied by the Replacement Parts Division).

5.2. clutch housing

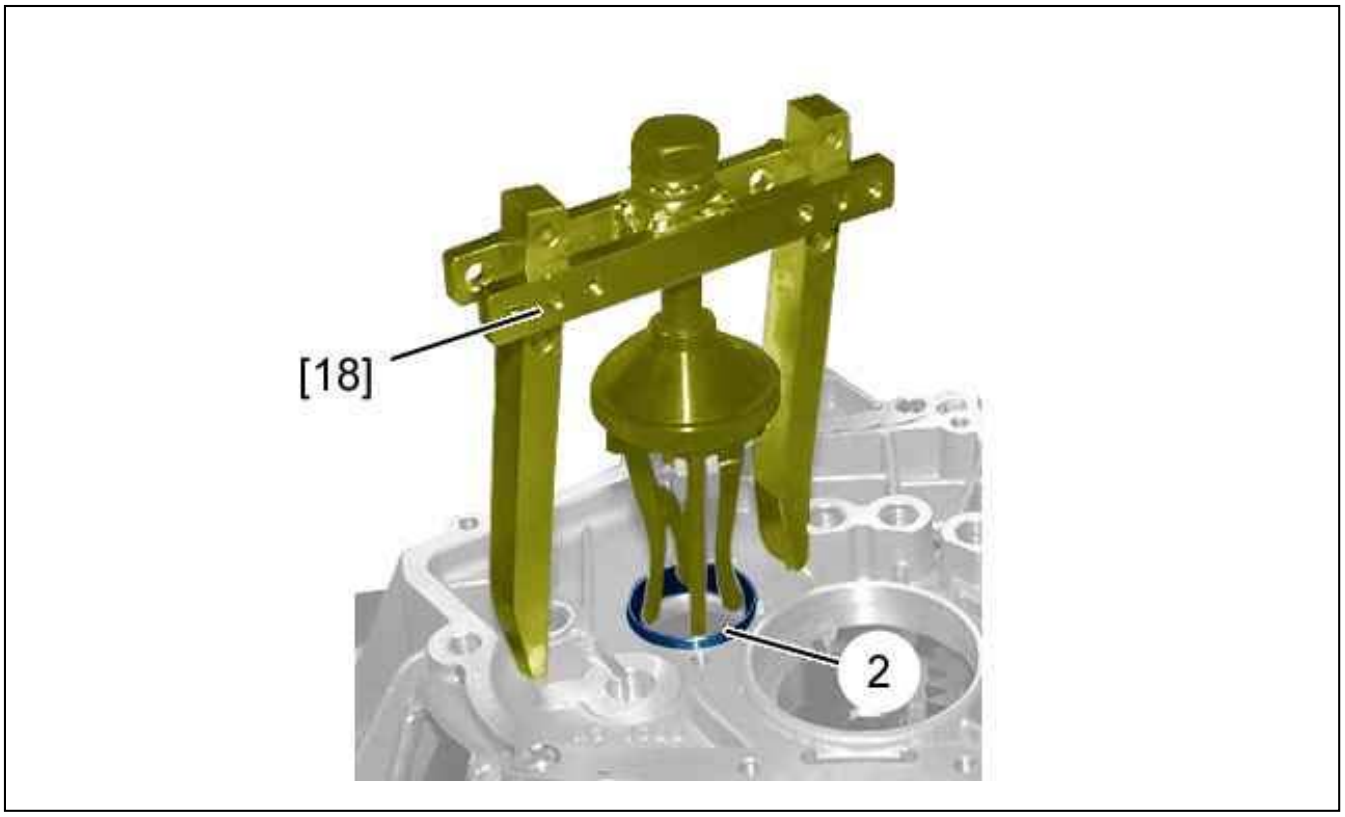

Figure : B2CM04ND

Remove : The external cage of the main shaft bearing (2) 1st gear end) ; Using tool [18].
Refit : The external cage of the main shaft bearing (2) 1st gear end).

STRIPPING-ASSEMBLING : COMPONENTS INTERNAL TO THE GEARBOX (MECHANICAL) TYPE MLGU6

ESSENTIAL : Bearings removed must not be re-used.

ESSENTIAL : The recommended tools should be used .

1. input shaft

1.1. Stripping

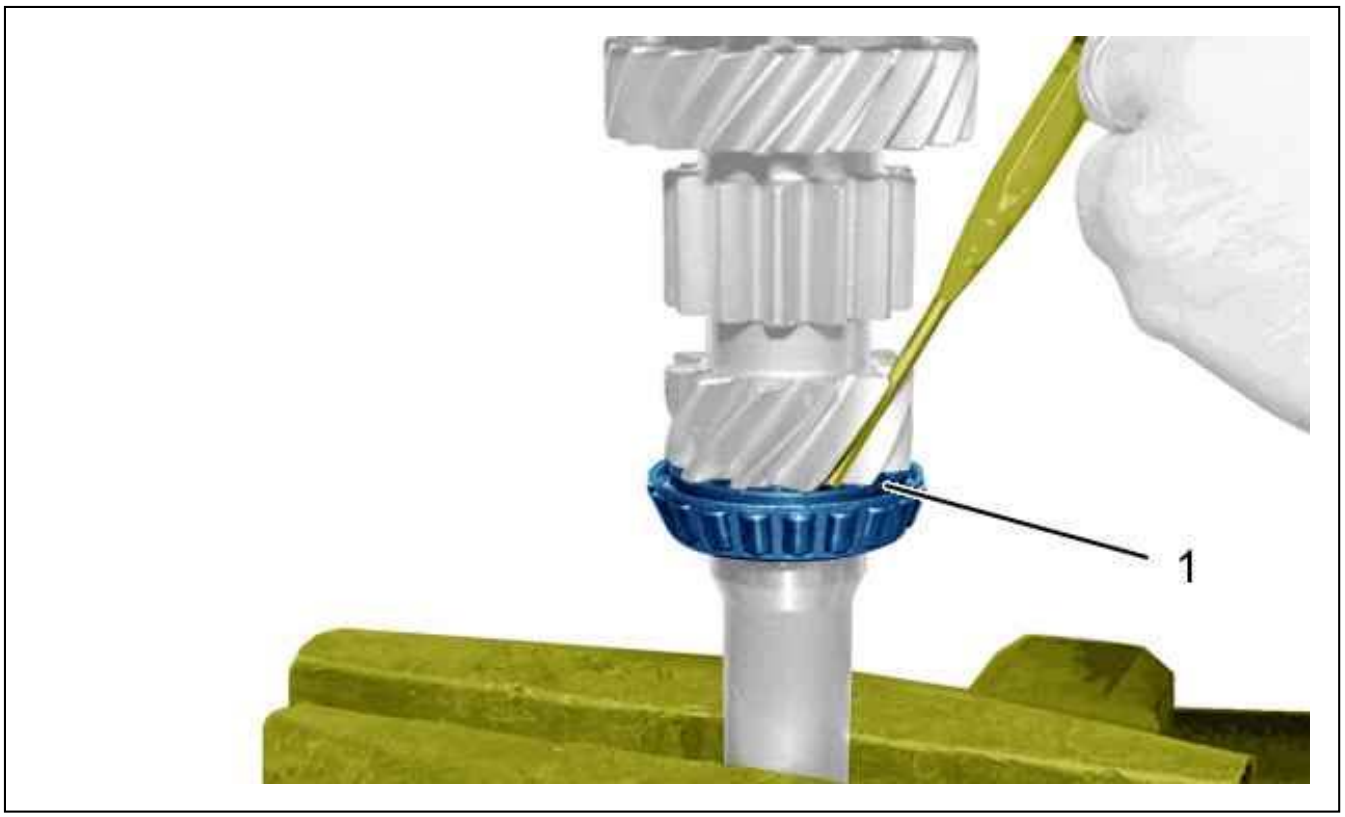

Figure : B2CM03JD

Lift bearing (1) by 1 to 2 mm in order to allow tool [5a] to be fitted without damaging 1st gear .

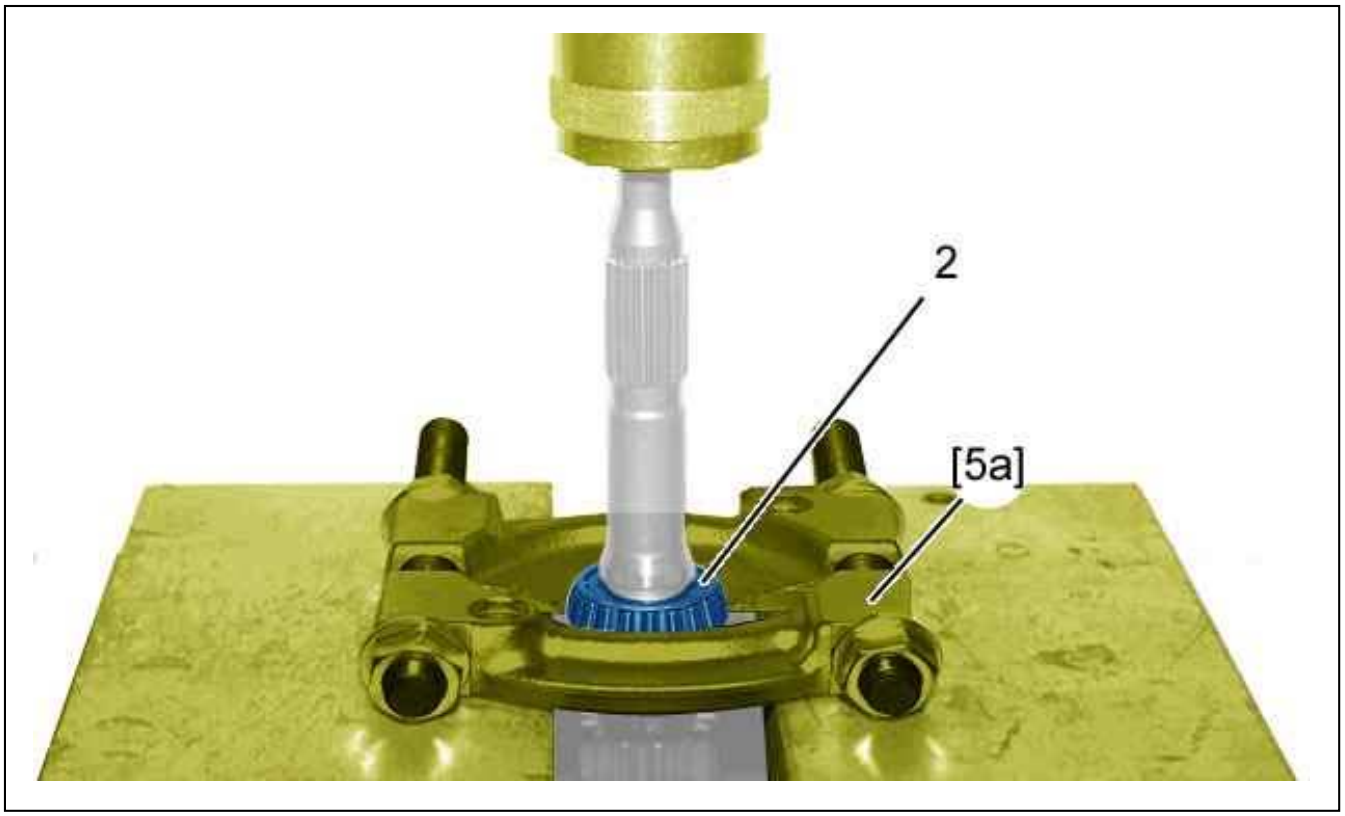

Figure : B2CM03KD

CAUTION : Do not use the bearing stop flange as a support.

Remove the bearing (2) 1st gear end) ; Using tool [5a] and press .

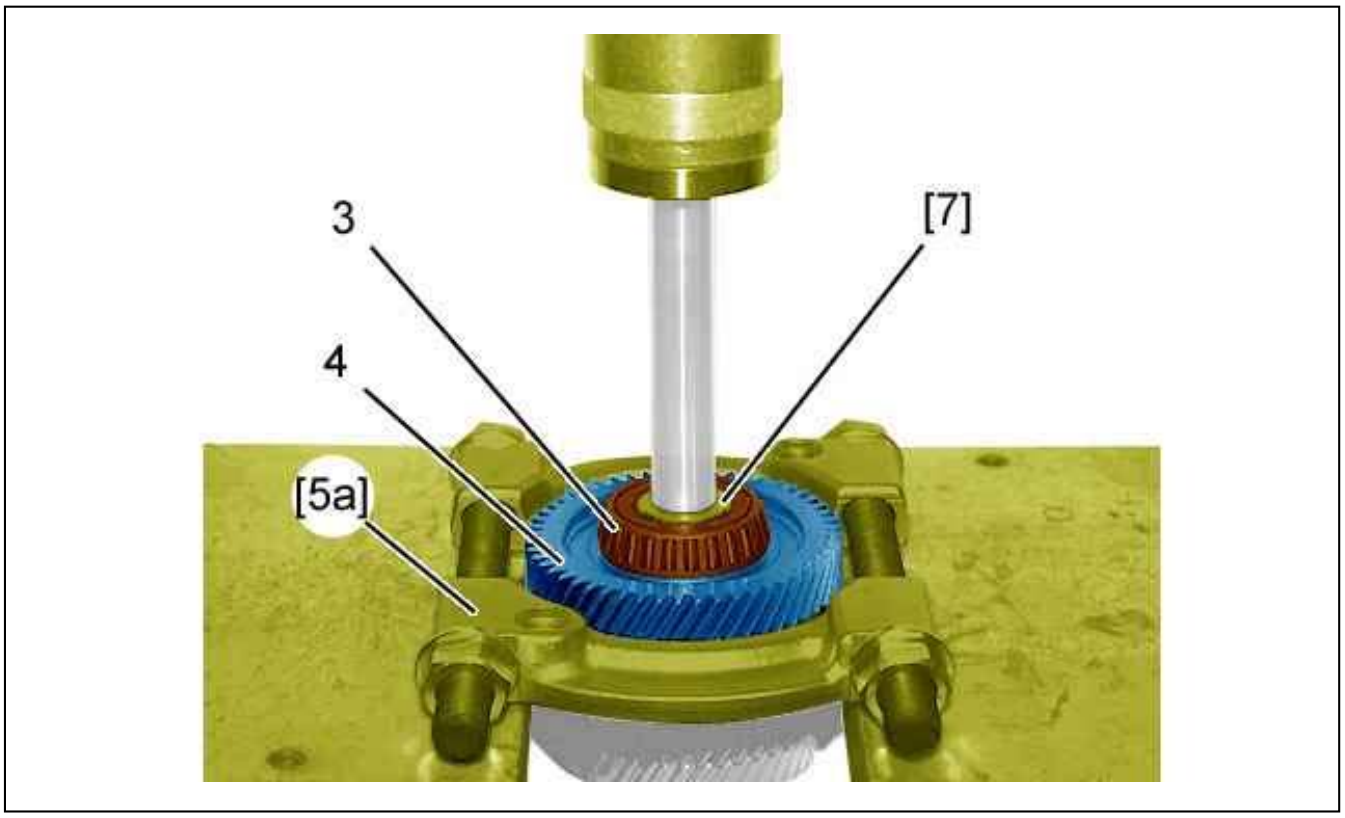

Figure : B2CM03LD

Remove :

- The 6th gear bearing (3)
- The 6th gear pinion (4) ; Using tools [5a], [7] and press

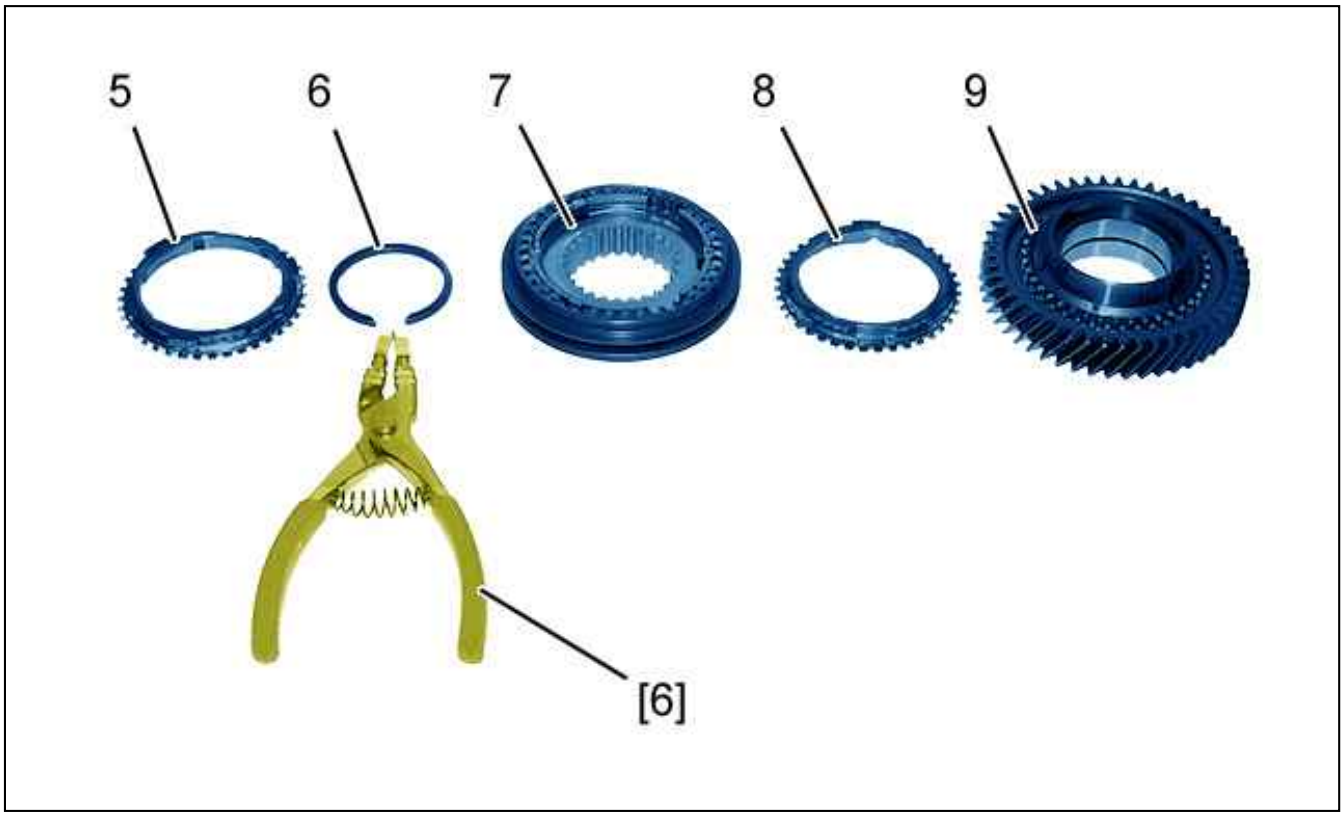

Figure : B2CM03MD

Remove :

- The synchronizer ring (5) of the 6th gear pinion
- The stop ring (6) ; Using tool [6]
- The dog clutch sleeve (7) (5th - 6th gear)
- The synchronizer ring (8) of the 5th gear pinion
- 5th speed gear (9)

1.2. Re-assembling

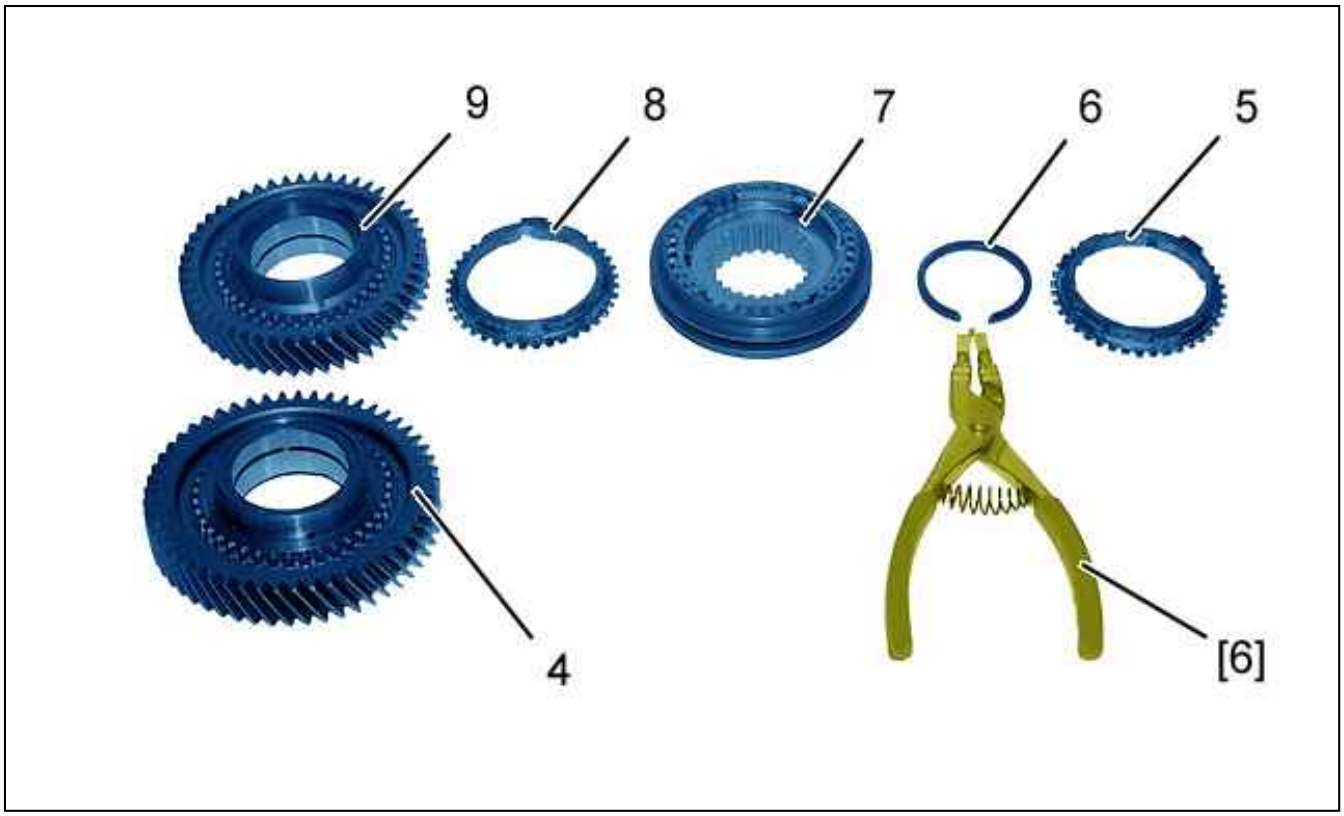

Figure : B2CM03ND

Refit :

- 5th speed gear (9)
- The synchronizer ring (8) of the 5th gear pinion
- The dog clutch sleeve (7) (5th - 6th gear)
- The stop ring (6) ; Using tool [6]
- The synchronizer ring (5) of the 6th gear pinion
- The 6th gear pinion (4)

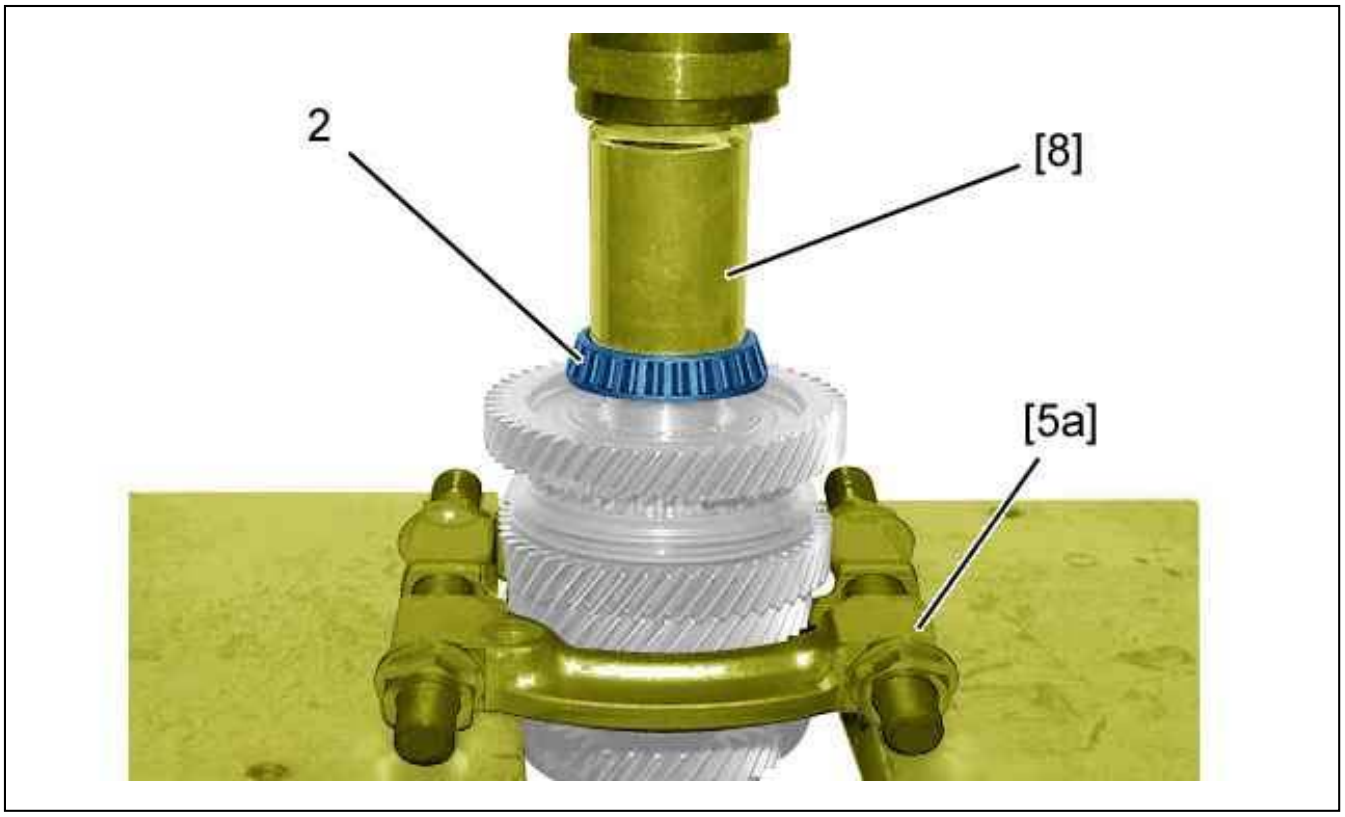

Figure : B2CM03PD

Fit the bearing (2) (6th gear end) ; Using tools [5a], [8] and press .

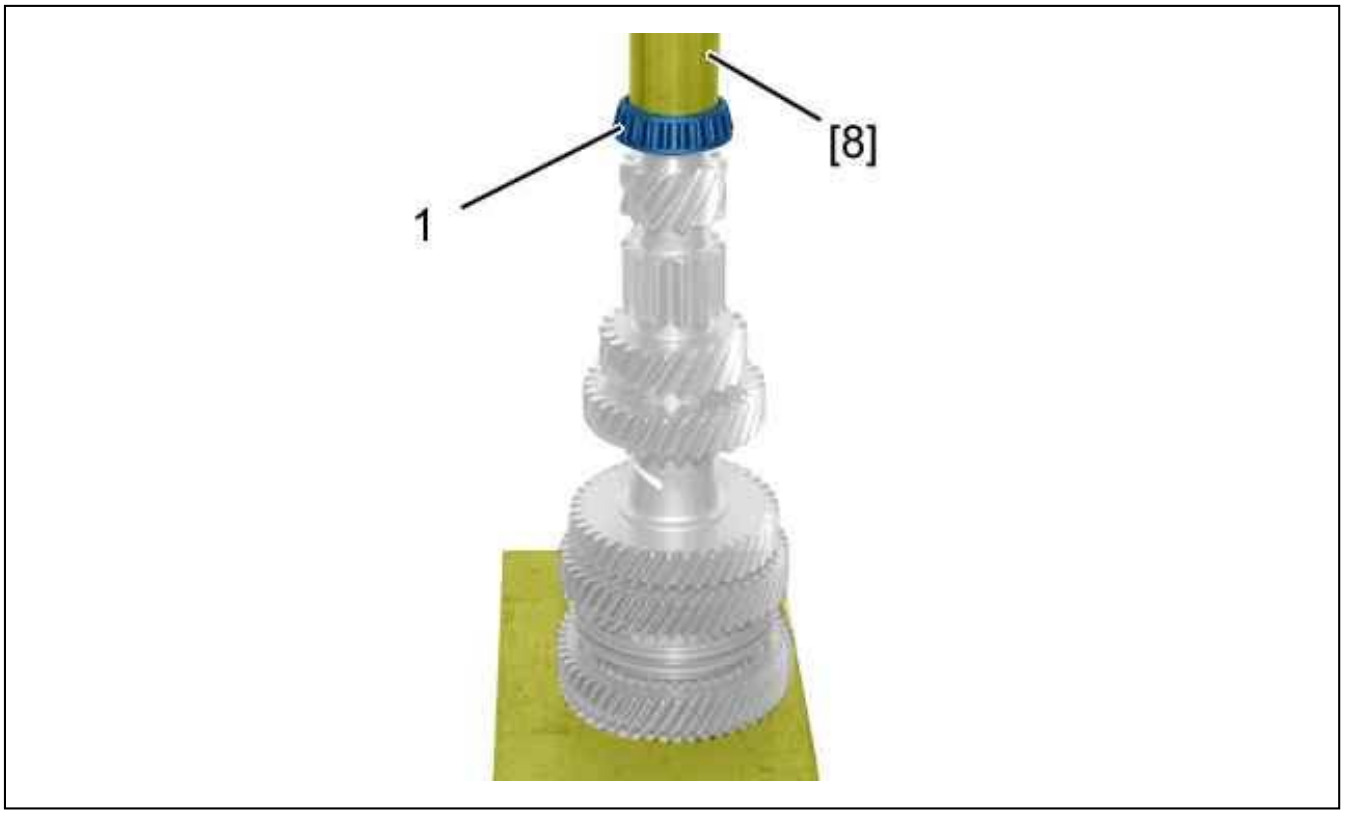

Figure : B2CM03QD

Fit the bearing (1) 1st gear end) ; Using tool [8] and press .

2. output shaft

2.1. Stripping

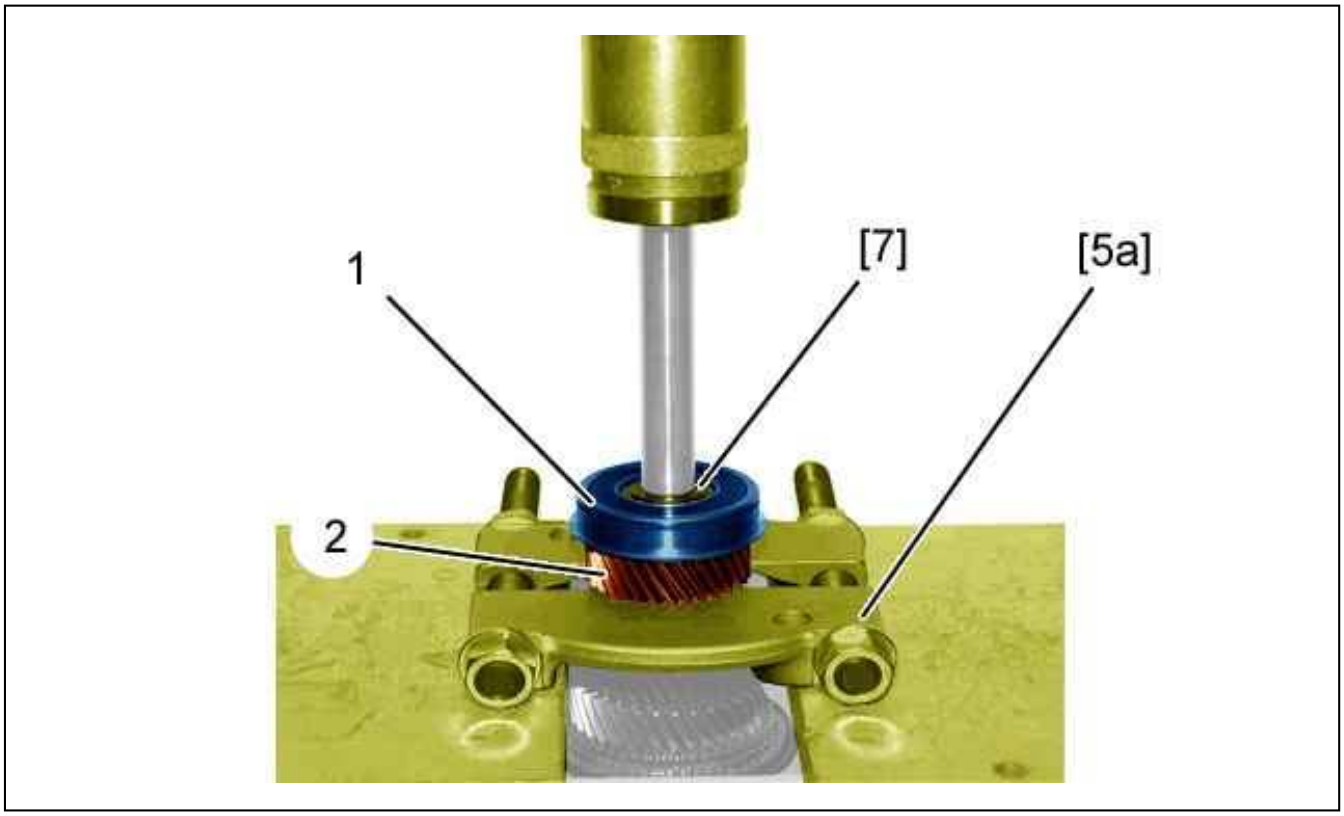

Figure : B2CM03RD

Remove : Using tools [5a], [7] and press :

- The 6th gear bearing (1)
- The 6th gear pinion (2)

N.B. : If rust is present on removal between the shaft and the 5th and 6th speed gears, the shaft and the rusty gears must be replaced.

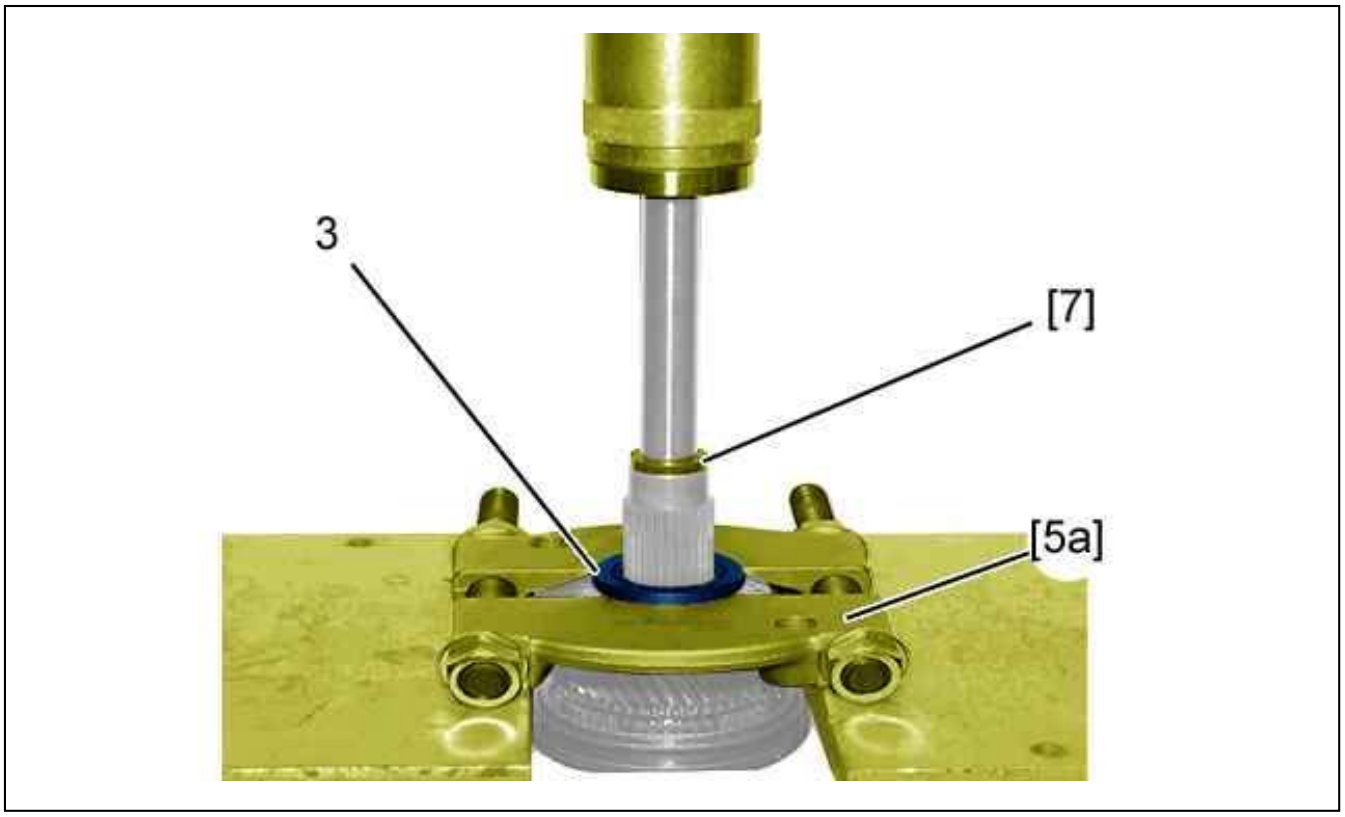

Figure : B2CM03SD

Remove : 5th speed gear (3) ; Using tools [5a], [7] and press .

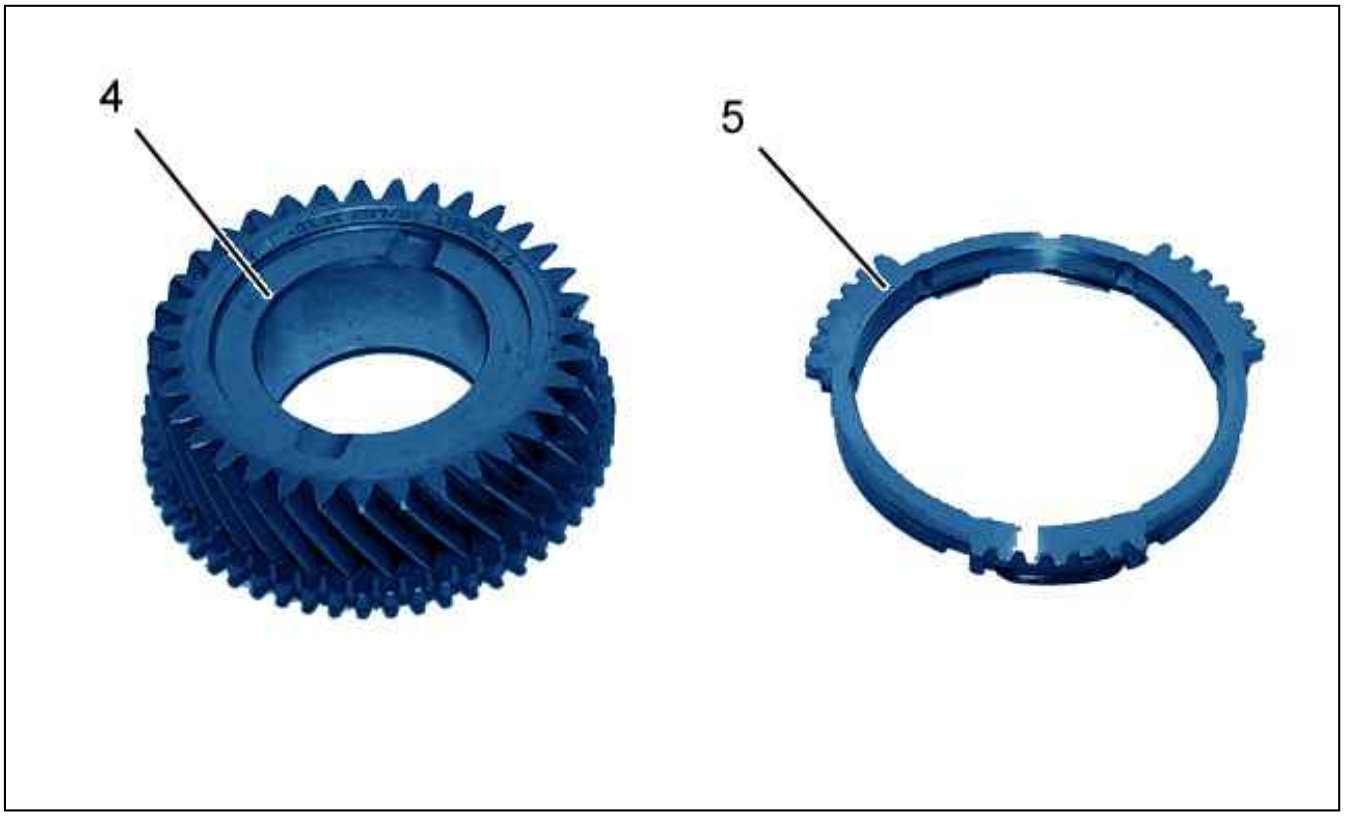

Figure : B2CM03TD

Remove (on the work bench) :

- The 4th speed gear (4)

- 4th speed gear synchronizer ring (5)

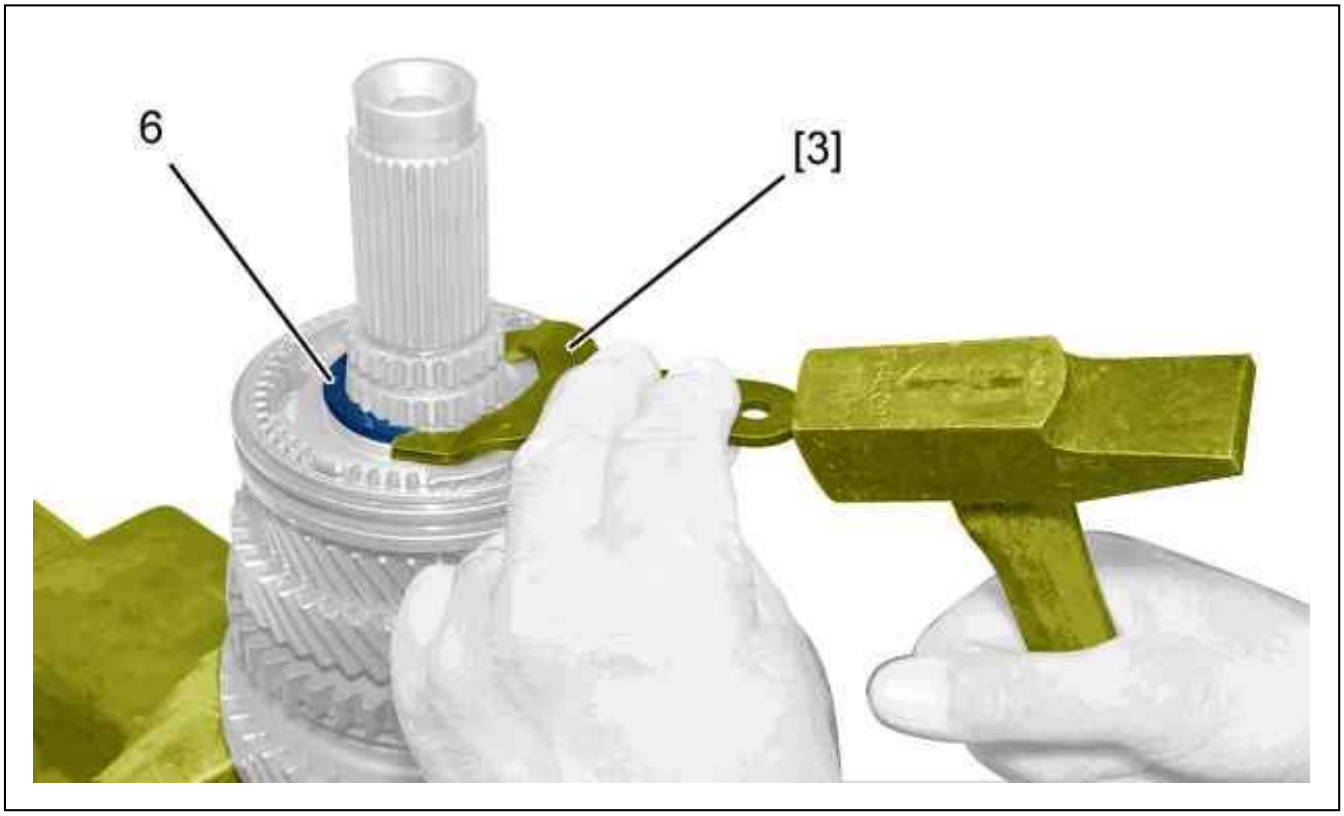

Figure : B2CM03UD

Remove the locking ring (6) ; Using tool [3].

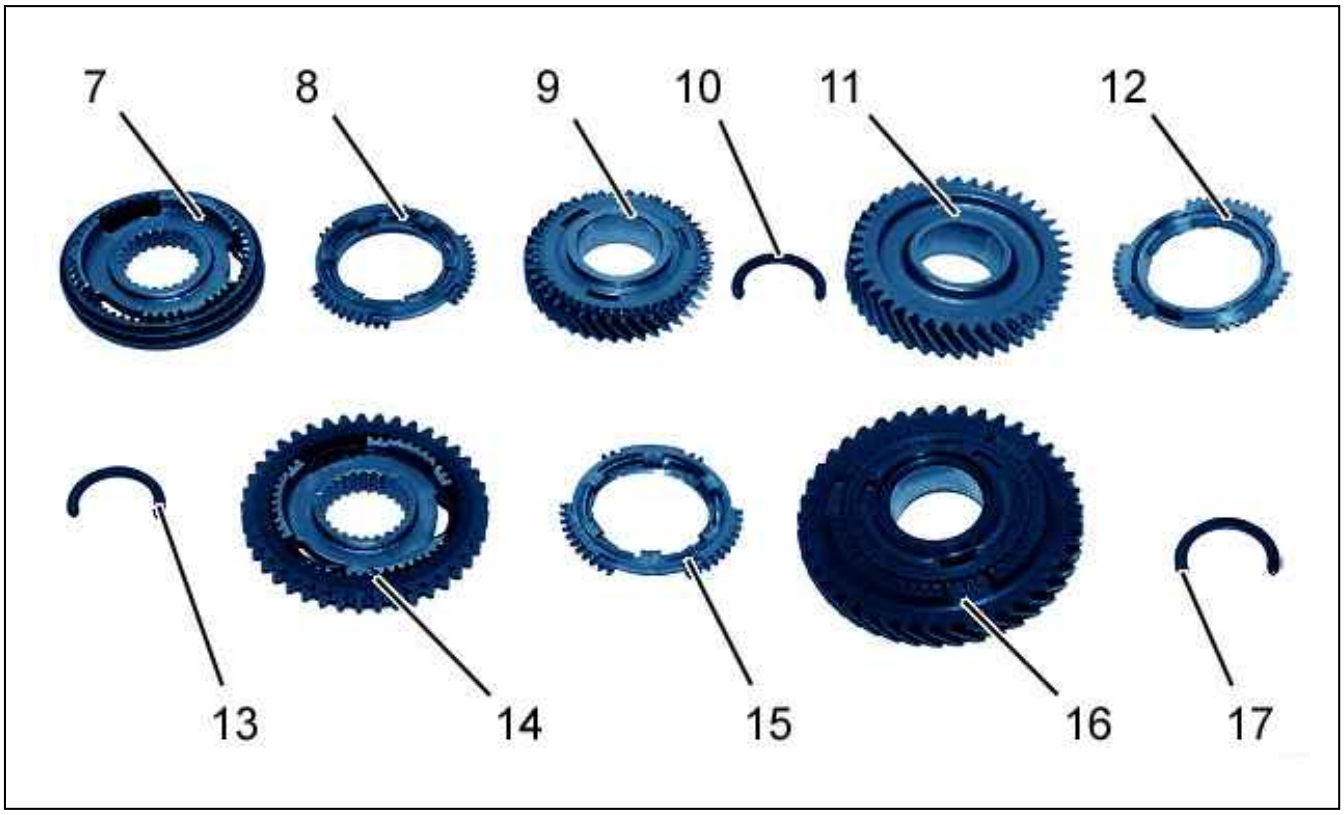

Figure : B2CM03VD

Remove :

- The 3rd 4th clutch engagement sleeve assembly (7)
- 3rd speed gear synchronizer ring (8)
- The 3rd speed gear (9)
- The stop ring (10) ; Using tool [3]
- 2nd speed gear (11)
- 2nd speed gear synchronizer ring (12)
- The stop ring (13) ; Using tool [3]
- The 2nd 1st clutch engagement sleeve assembly (14)
- The 1st speed gear synchronizer ring (15)
- 1st speed gear (16)
- The stop ring (17) ; Using tool [3]

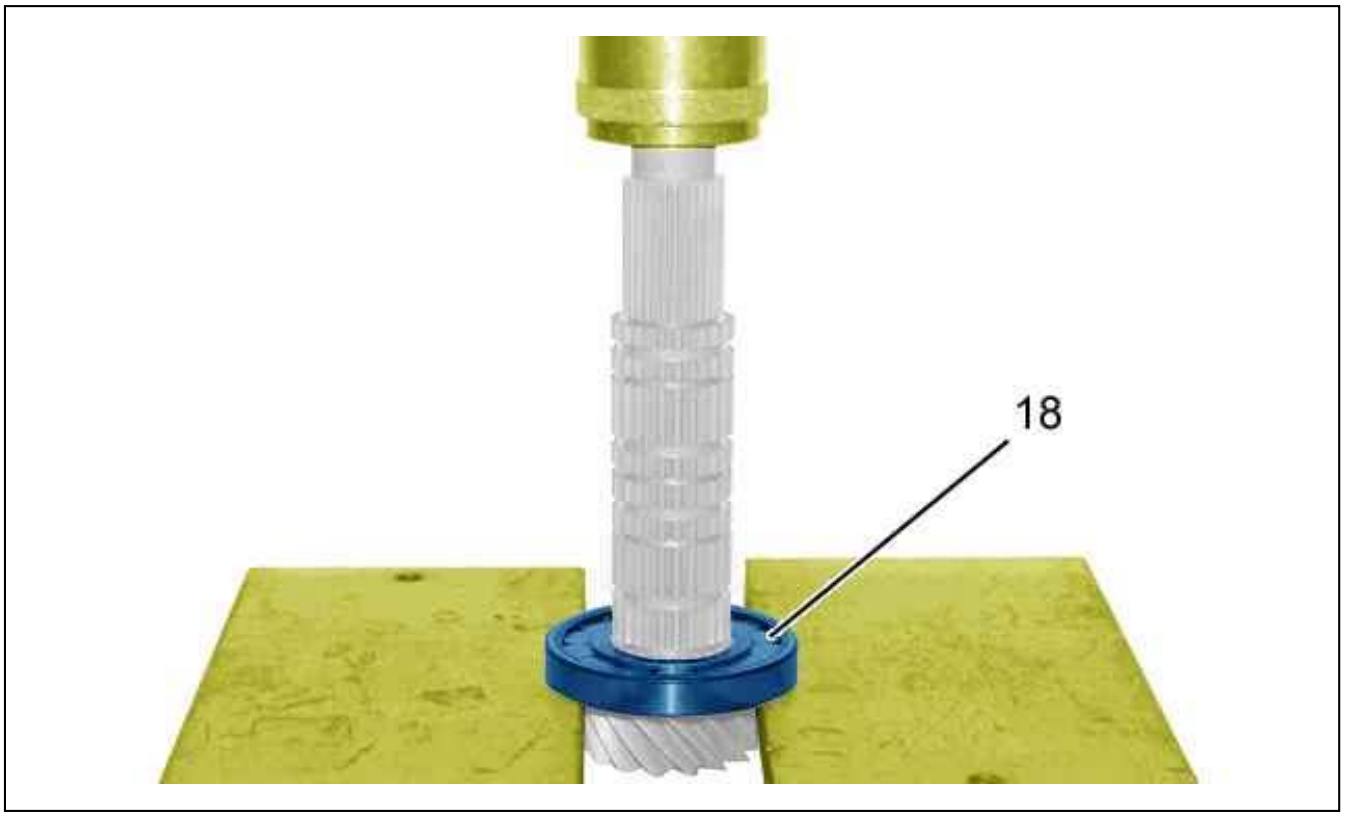

Figure : B2CM03WD

Remove the bearing (18) using a press.

2.2. Re-assembling

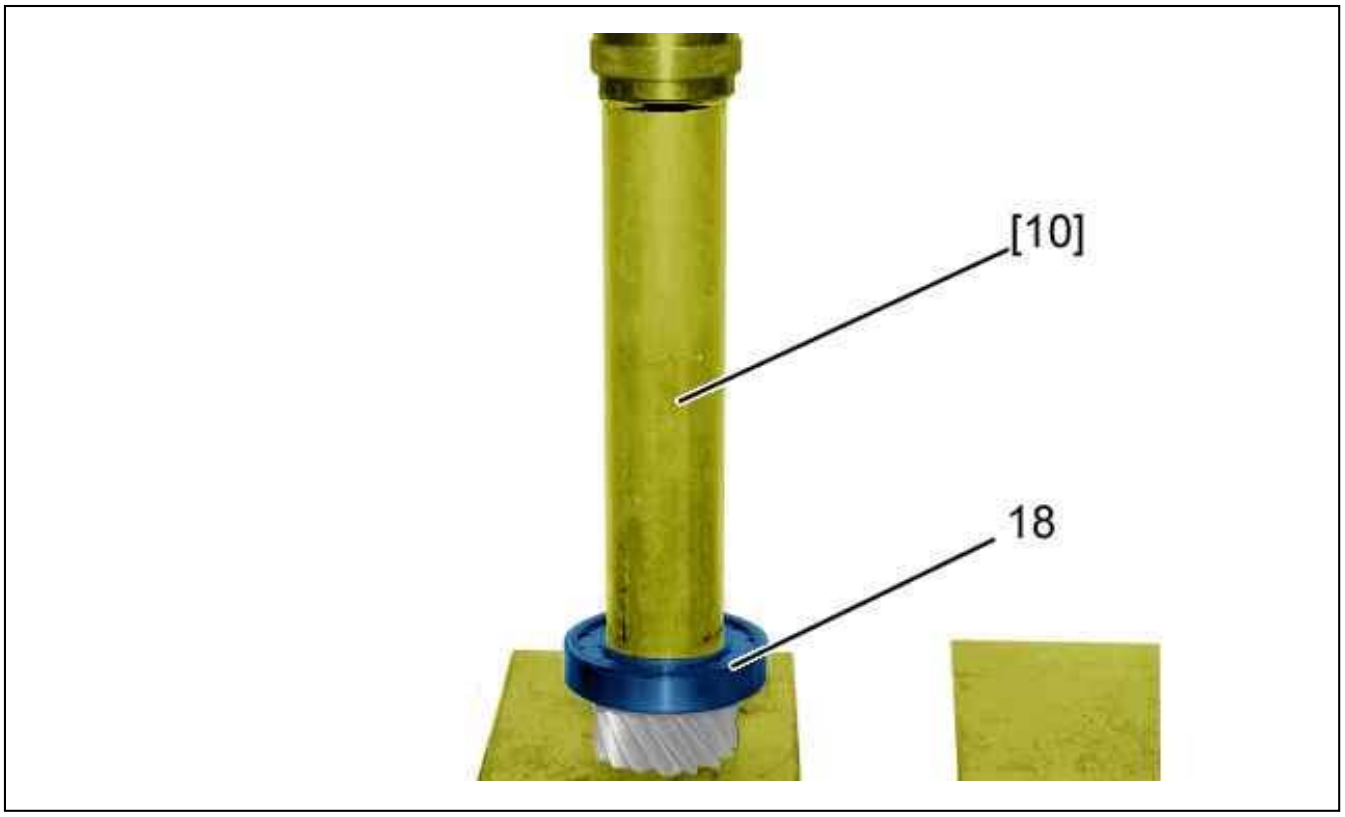

Figure : B2CM03XD

Fit the bearing (18) ; Using tool [10] and press .

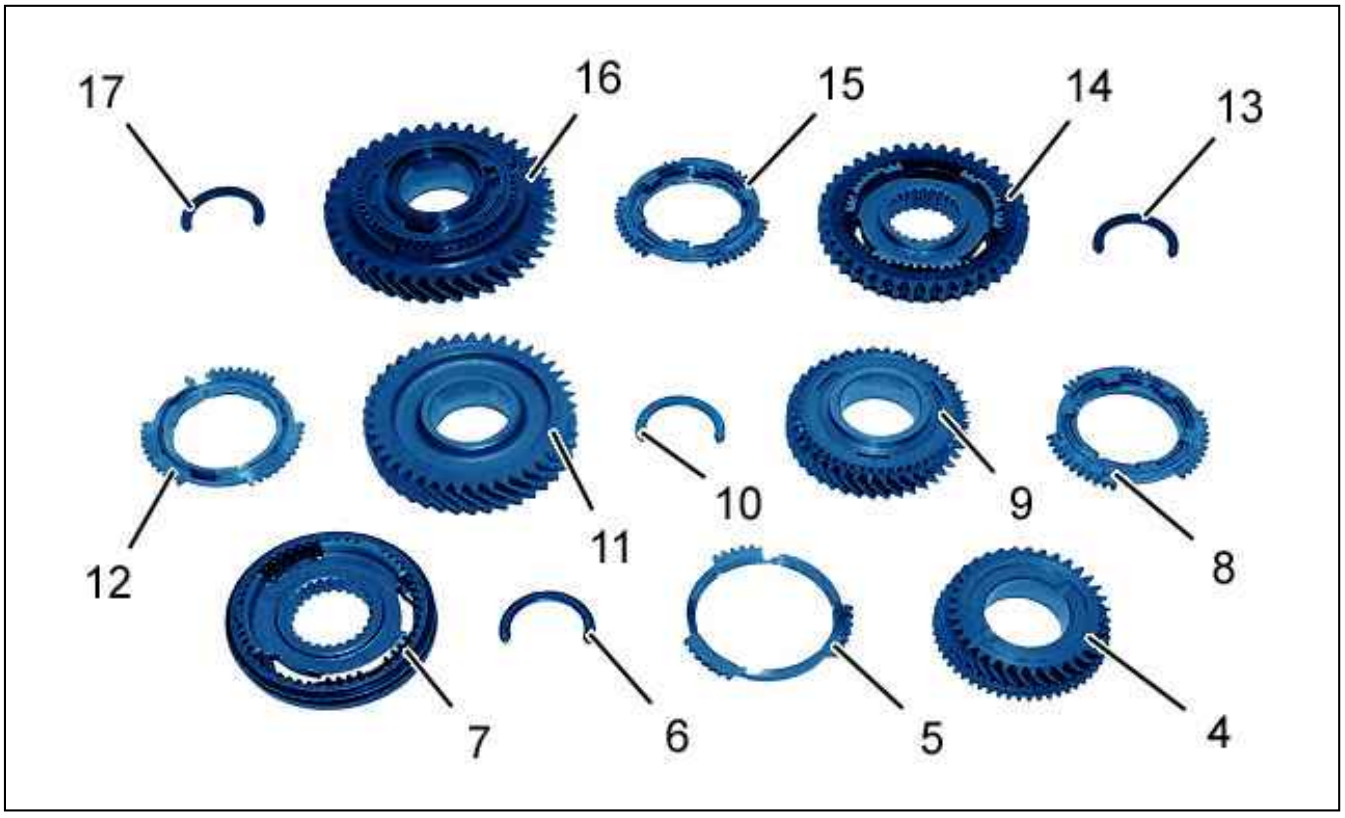

Figure : B2CM03YD

Refit :

- The stop ring (17) ; Using tool [3]

- 1st speed gear (16)
- The 1st speed gear synchronizer ring (15)
- The 2nd 1st clutch engagement sleeve assembly (14)
- The stop ring (13) ; Using tool [3]
- 2nd speed gear synchronizer ring (12)
- 2nd speed gear (11)
- The stop ring (10) ; Using tool [3]
- The 3rd speed gear (9)
- 3rd speed gear synchronizer ring (8)
- The 3rd 4th clutch engagement sleeve assembly (7)
- The stop ring (6) ; Using tool [3]
- 4th speed gear synchronizer ring (5)
- The 4th speed gear (4)

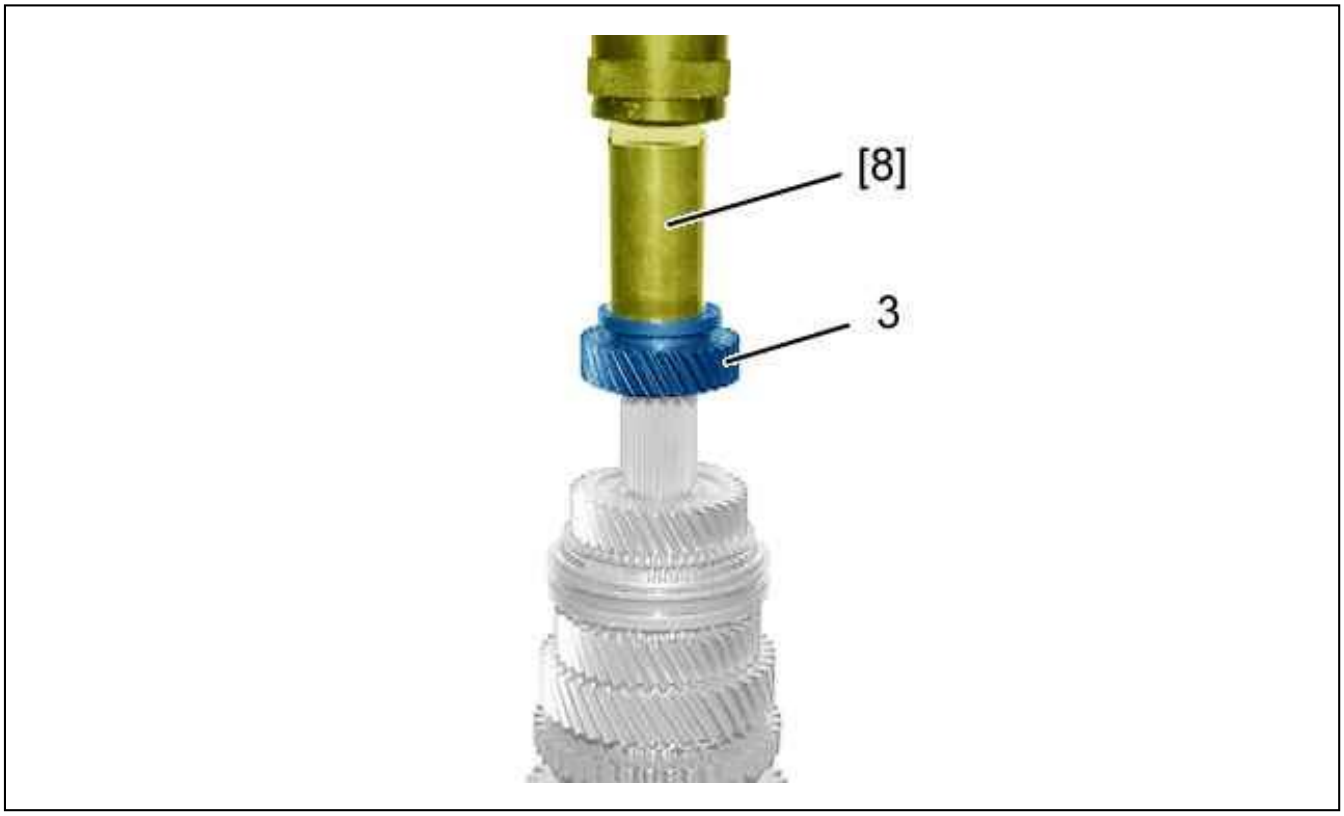

Figure : B2CM03ZD

Refit : 5th speed gear (3) ; Using tool [8] and press .

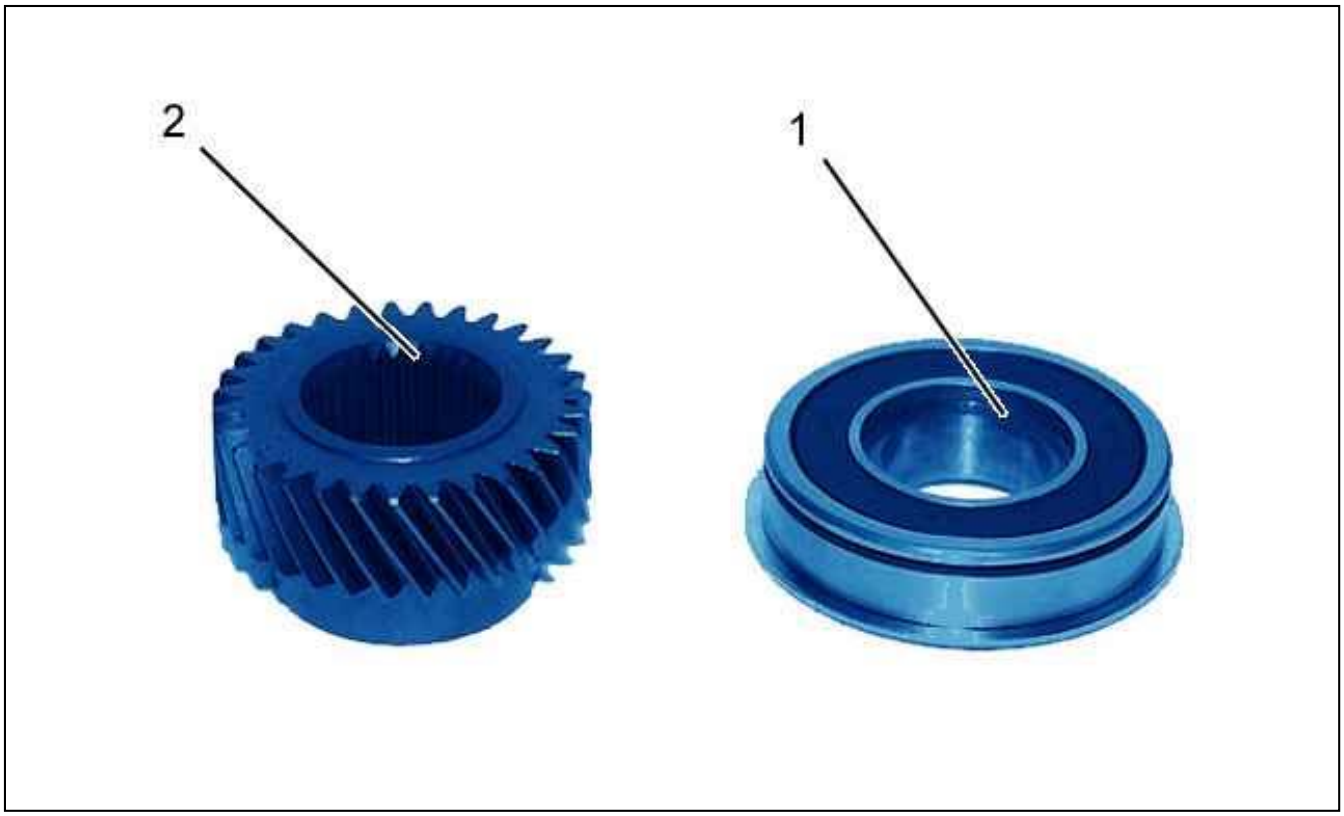

Figure : B2CM040D

CAUTION : Fit the bearing the right way round : Open groove opposite the gears .

Refit ; Using tool [8] and press :

- The 6th gear pinion (2)
- The 6th gear bearing (1)

N.B. : If the force required to fit the 5th and 6th gear pinions is less than 500 daN ; Procedure for replacing parts.

3. Gearbox control plate

3.1. Stripping

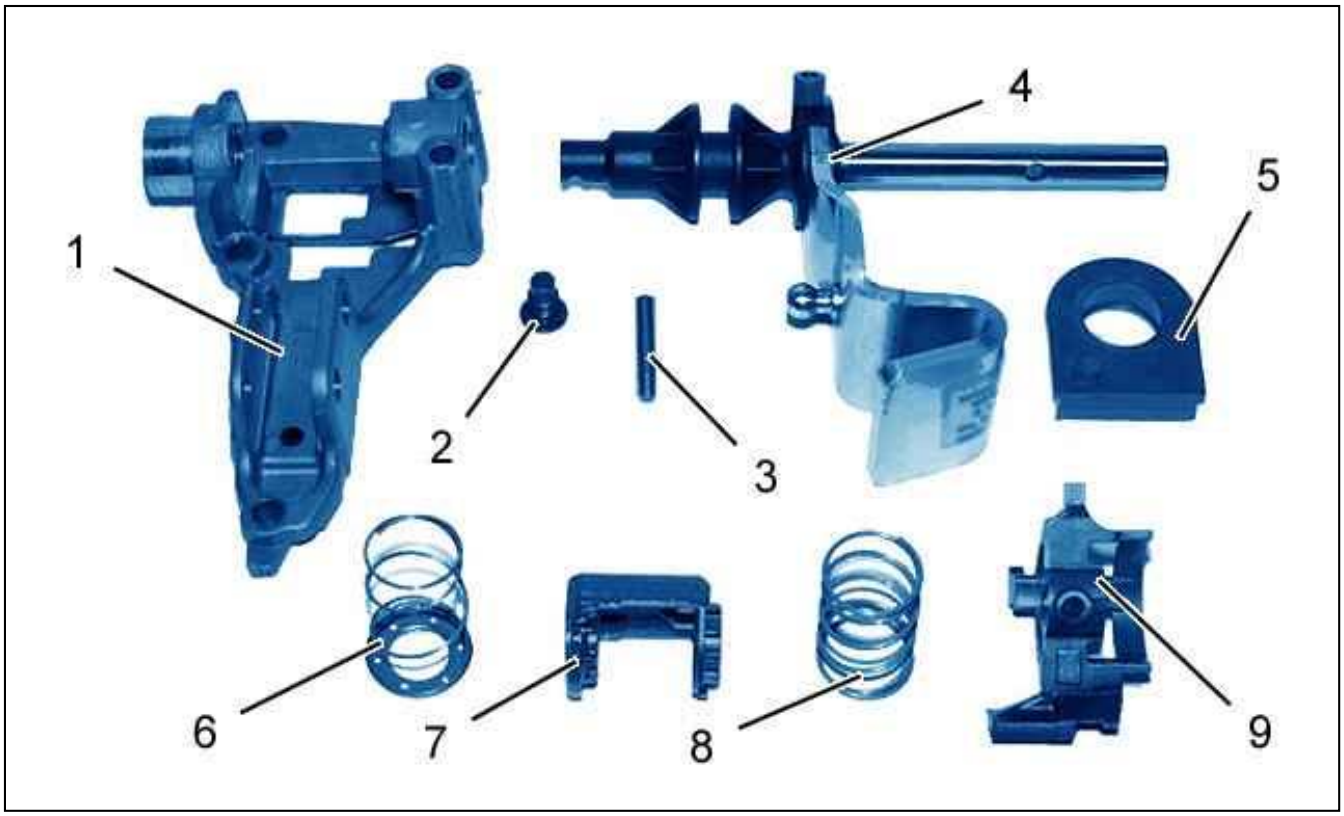

Figure : B2CM041D

Immobilise the control mounting (1) in a vice.
Remove :

- The (2) bolt
- The pin (3)
- Shaft (4) and its seal (5)
- The spring (6)
- The spacer (7)
- The return spring (8)
- The gear engagement finger (9)

3.2. Re-assembling

Carry out the re-trim operations in the reverse order to the stripping operations.
Tightening of the bolt (2) to 2 daN.m.

4. Differential housing

4.1. Stripping

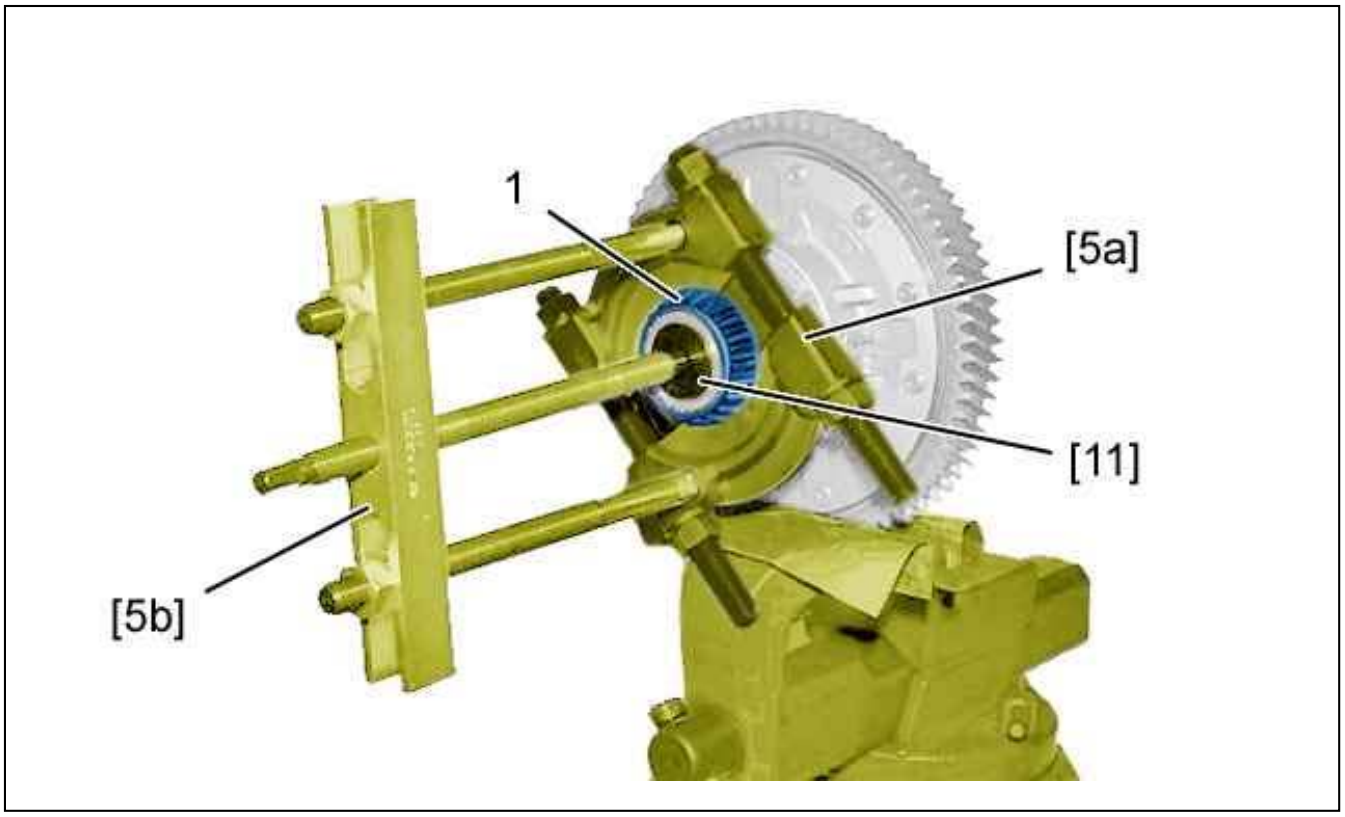

Figure : B2CM042D

Remove the bearing (1) ; Using the tools [5a], [5b], [11].

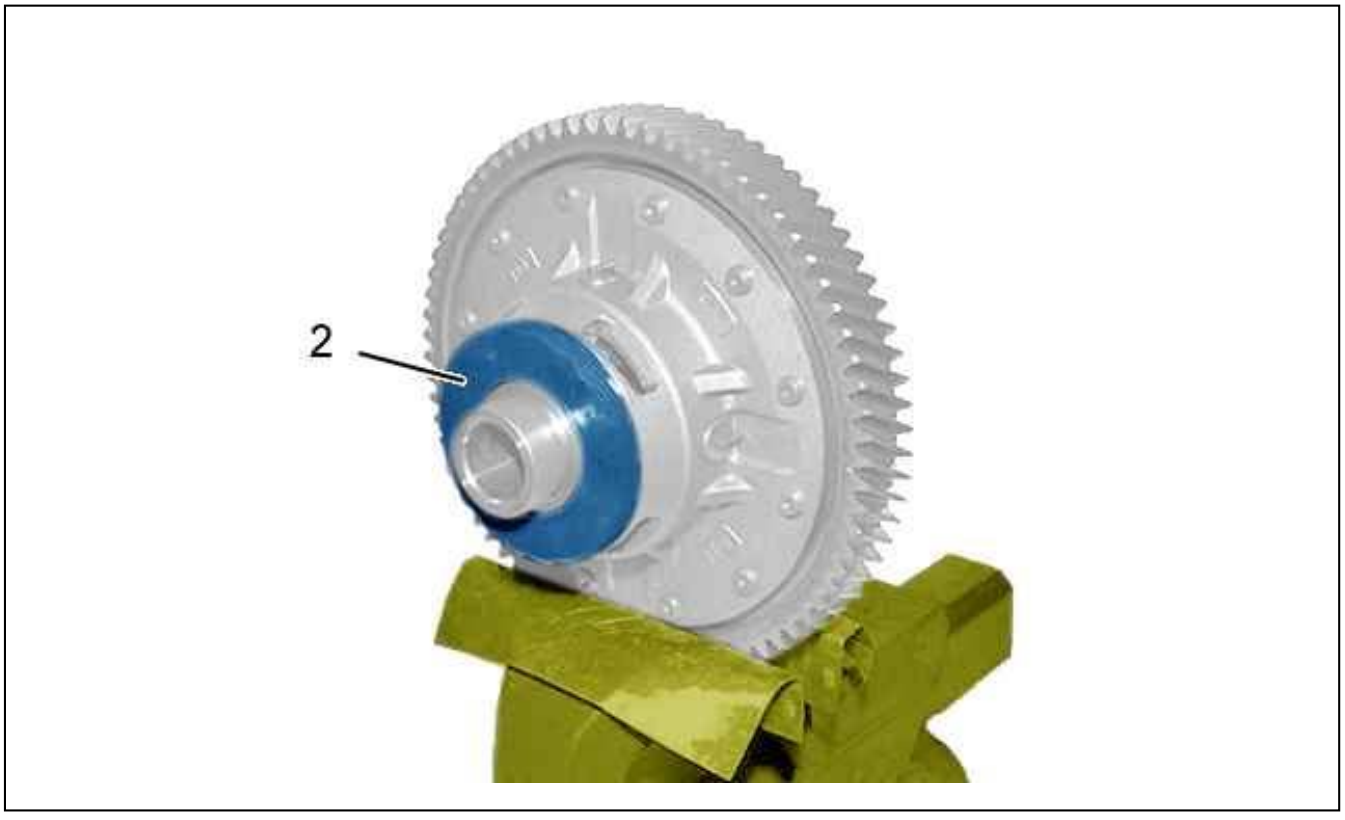

Figure : B2CM043D

Remove the speedometer drive gear (2).

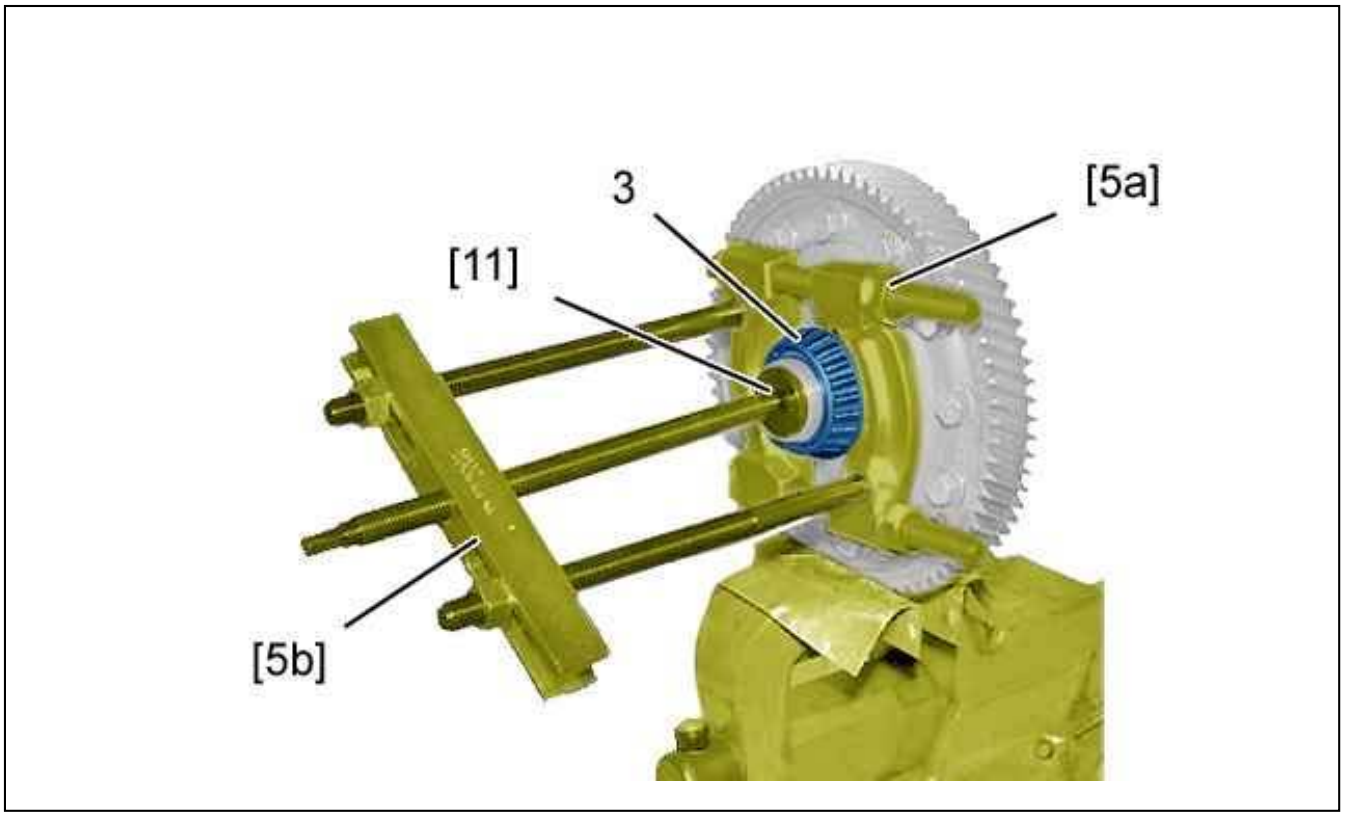

Figure : B2CM044D

Remove the bearing (3) ; Using the tools [5a], [5b], [11].



Figure : B2CM045D

Remove the fixing screws (differential box) (4).

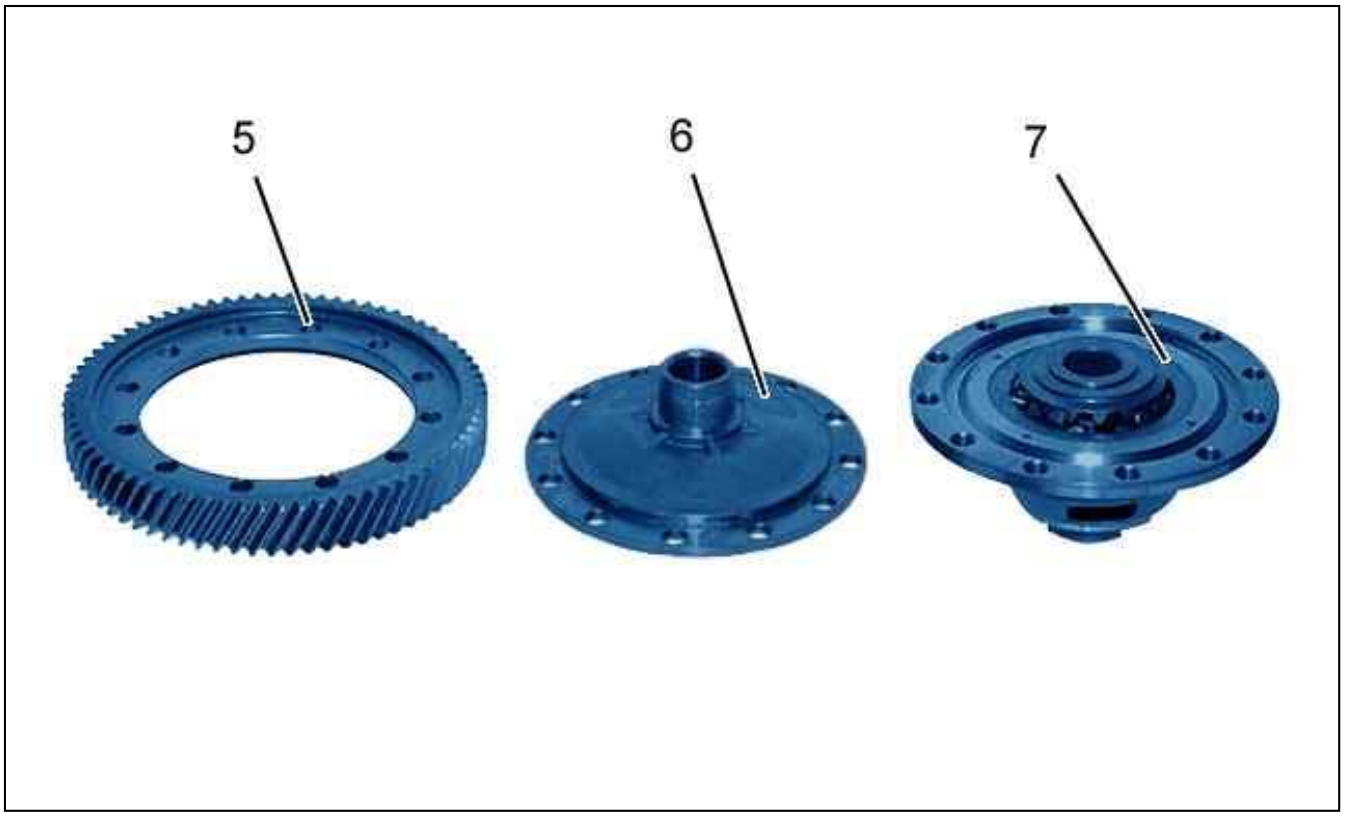

Figure : B2CM046D

Separate the following parts :

- Differential crown wheel (5)
- The flange (6)
- Satellite pinion holder casing (7)

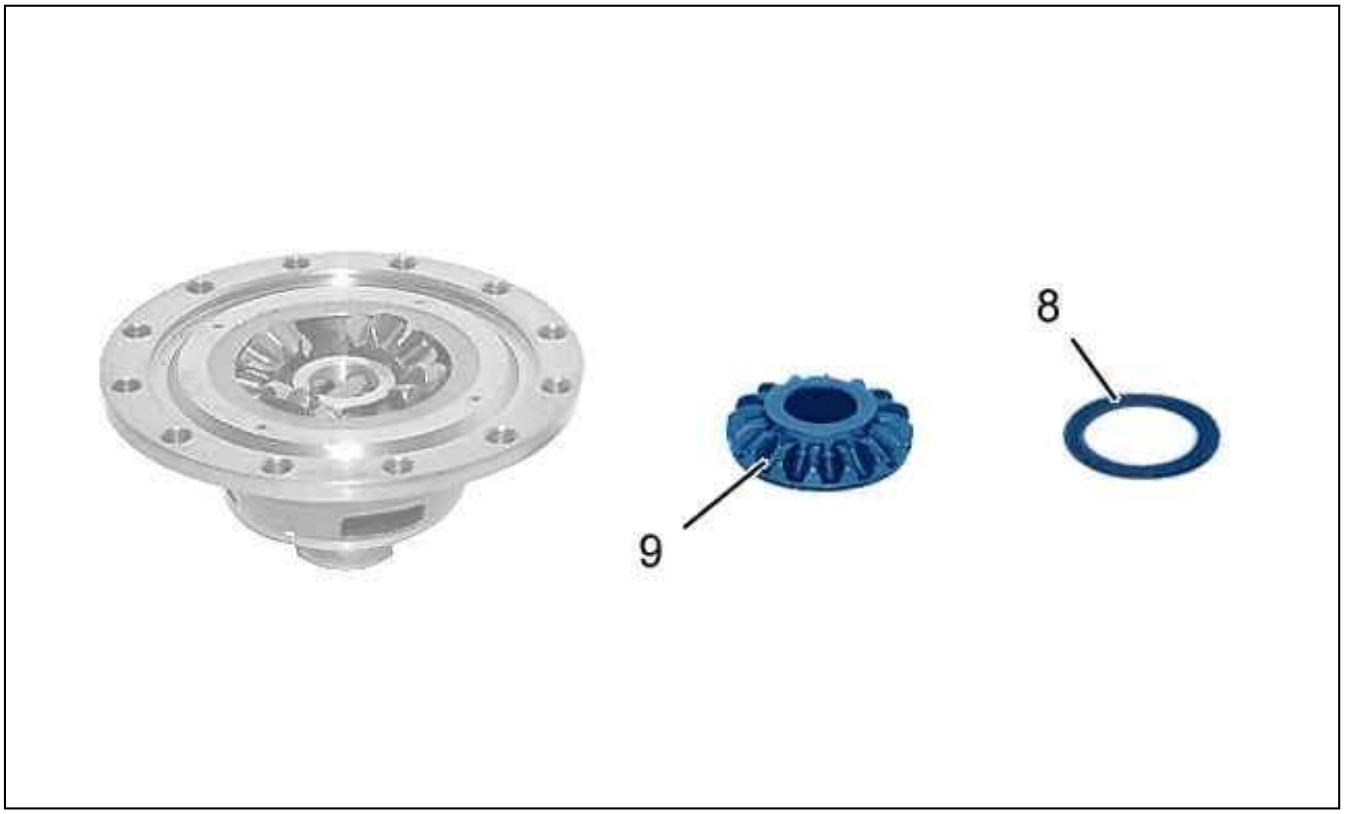

Figure : B2CM047D

Remove :

- The friction washer (8)
- The sun wheel (9)



Figure : B2CM048D

Drive out the 4 roll pins (10).

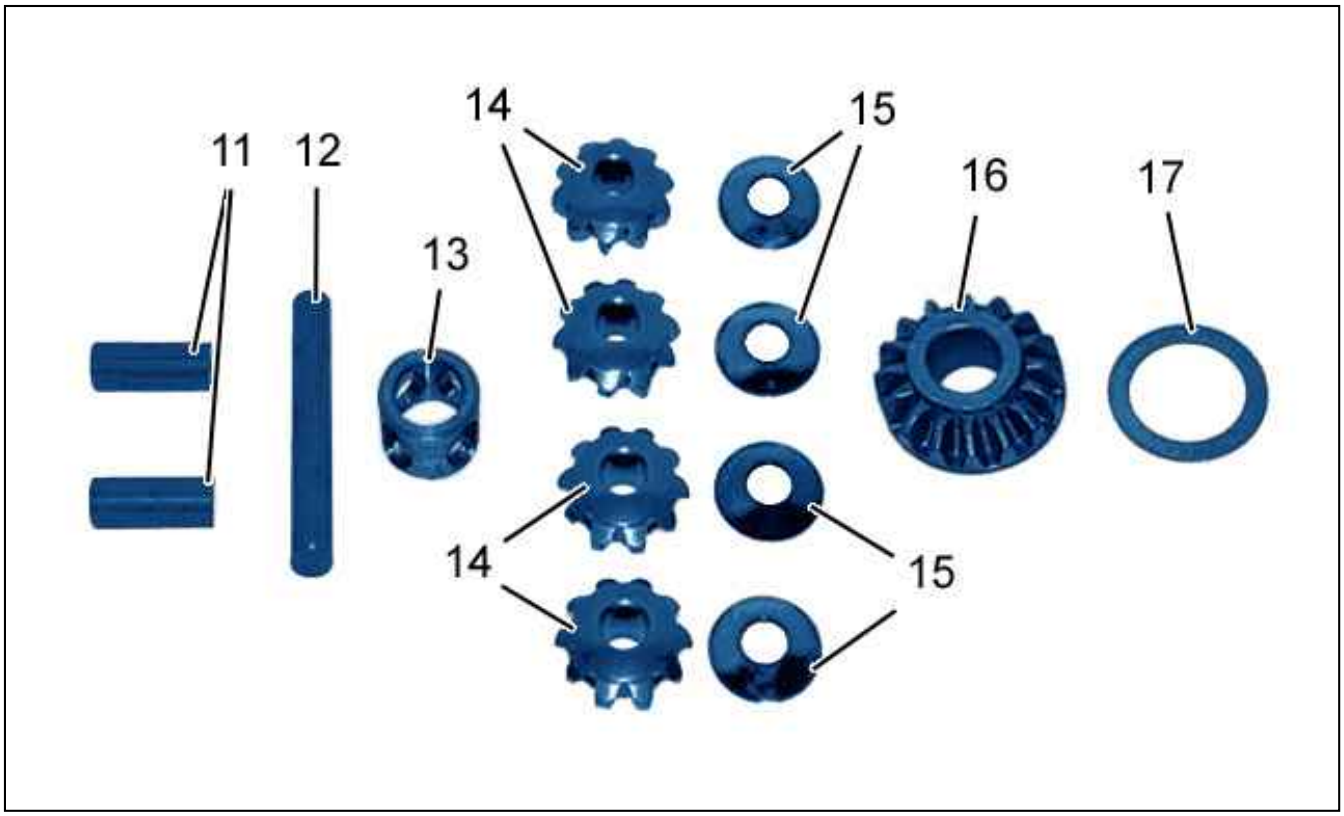

Figure : B2CM049D

Remove :

- The half-shafts (11) and the shaft (12)
- Centre part (13)
- The planet cage (14)
- The friction cups (15)
- The sun wheel (16)
- The friction washer (17)

4.2. Re-assembling

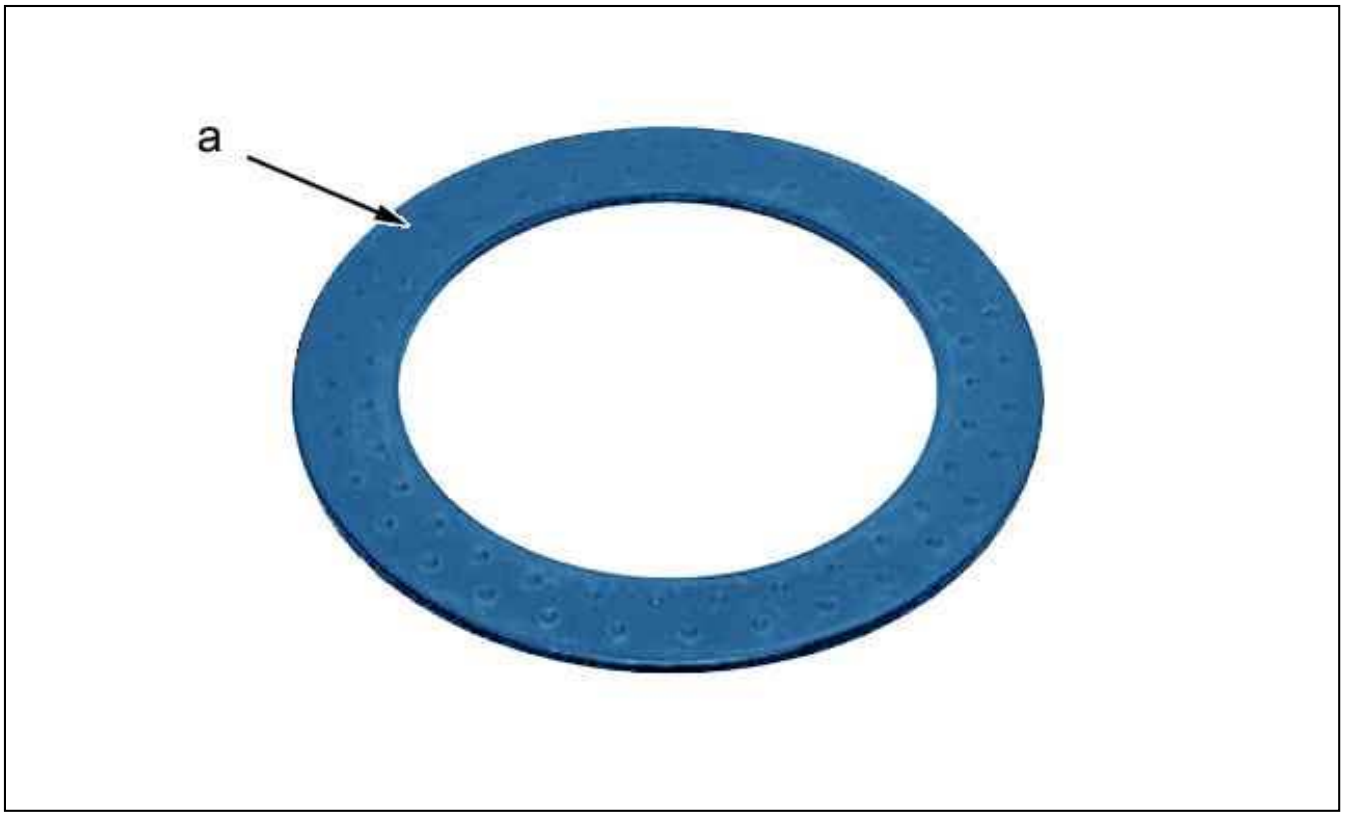

Figure : B2CM04AD

ESSENTIAL : Fit the coppered and indented face "a" of the friction washers (8) and (17) on the sun wheel side.

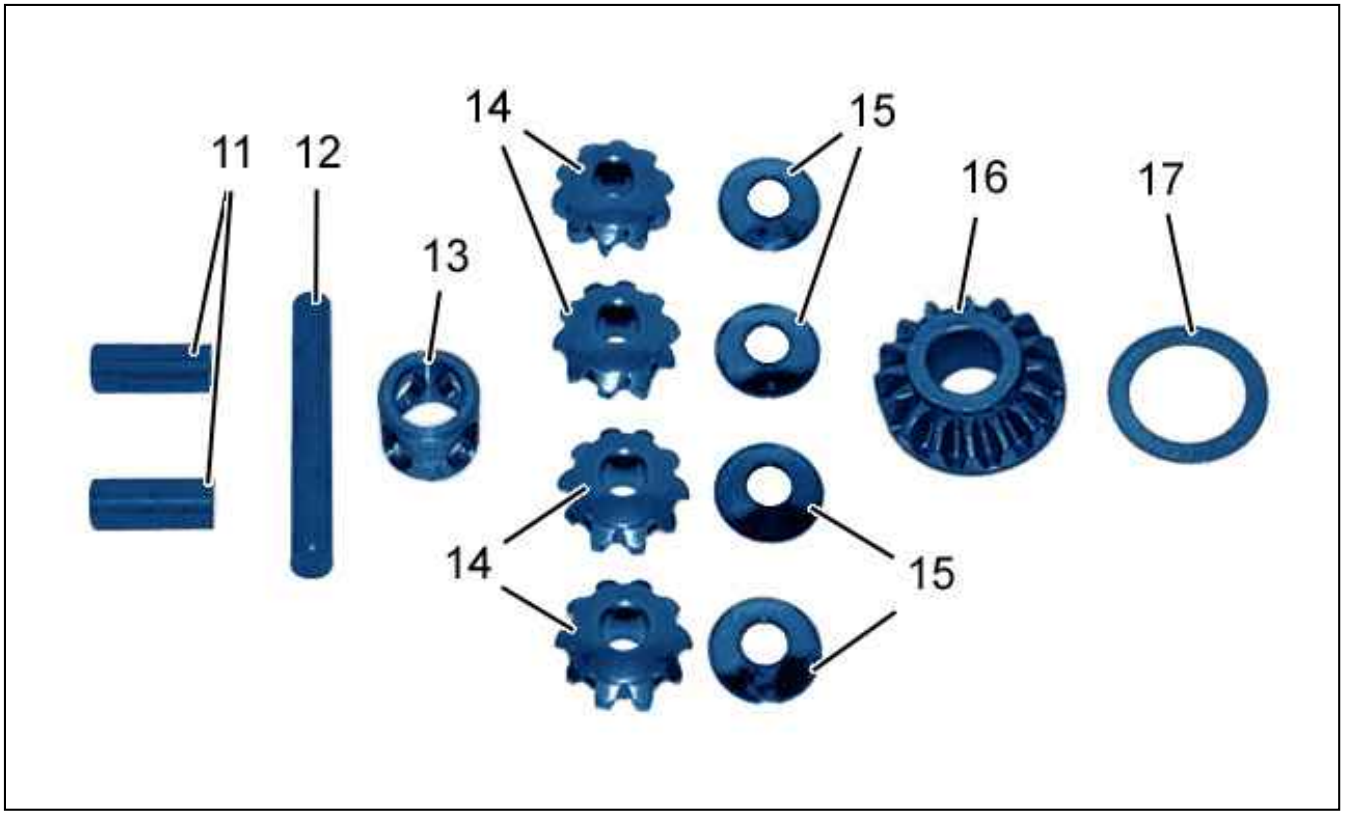

Figure : B2CM049D

Refit in the sun wheel carrier unit (7) :

- A friction washer (17) thick : 1,6 mm
- The sun wheel (16)
- The cups (15)
- The planet cage (14)
- Centre part (13)
- The shaft (12) and the half-shafts (11)

Check the refitted parts rotate freely.
Turn the assembly carefully.

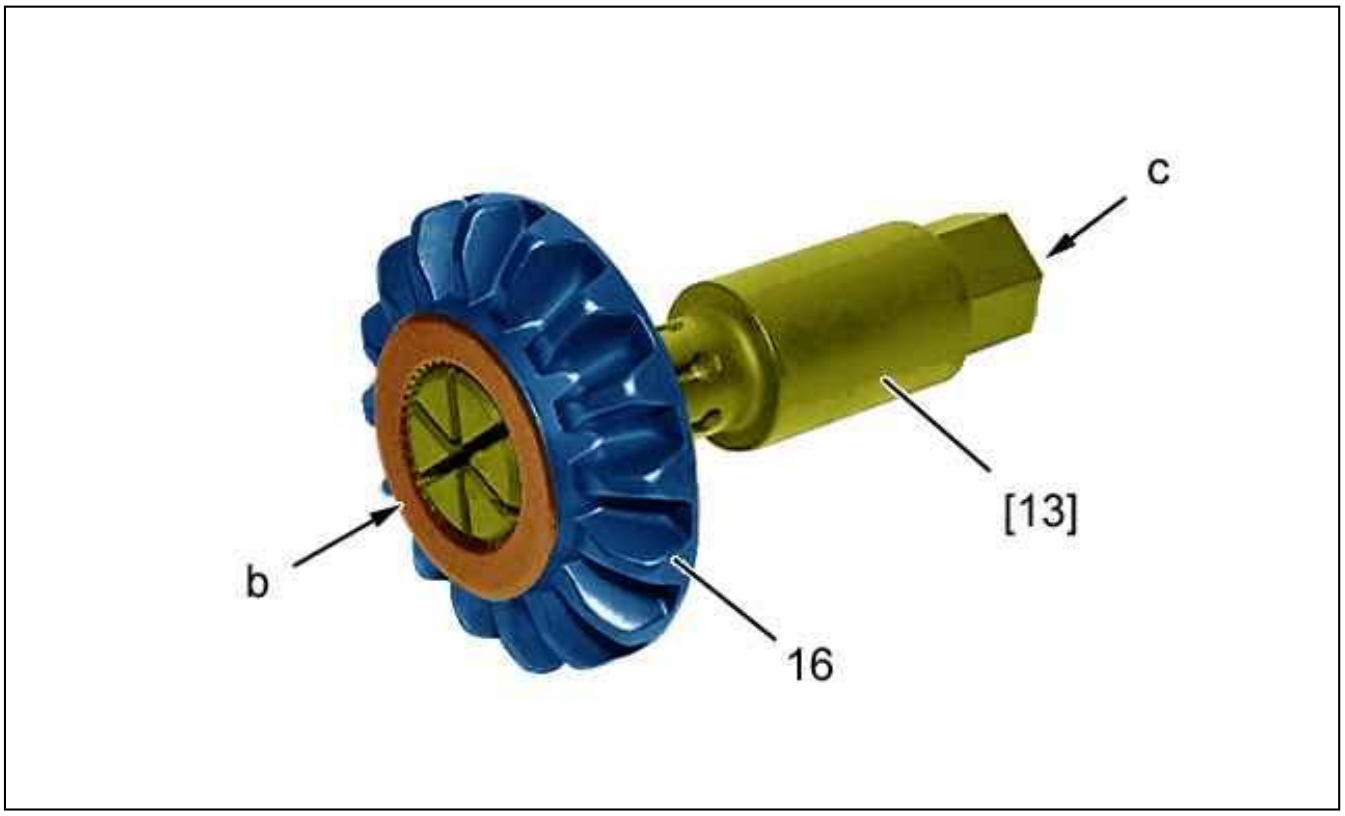

Figure : B2CM04BD

Position the tool [13].
For fitting on the sun wheels (16), the tool [13] must not protrude from the sun wheel at "b" and will be immobilised using the internal bolt "c".

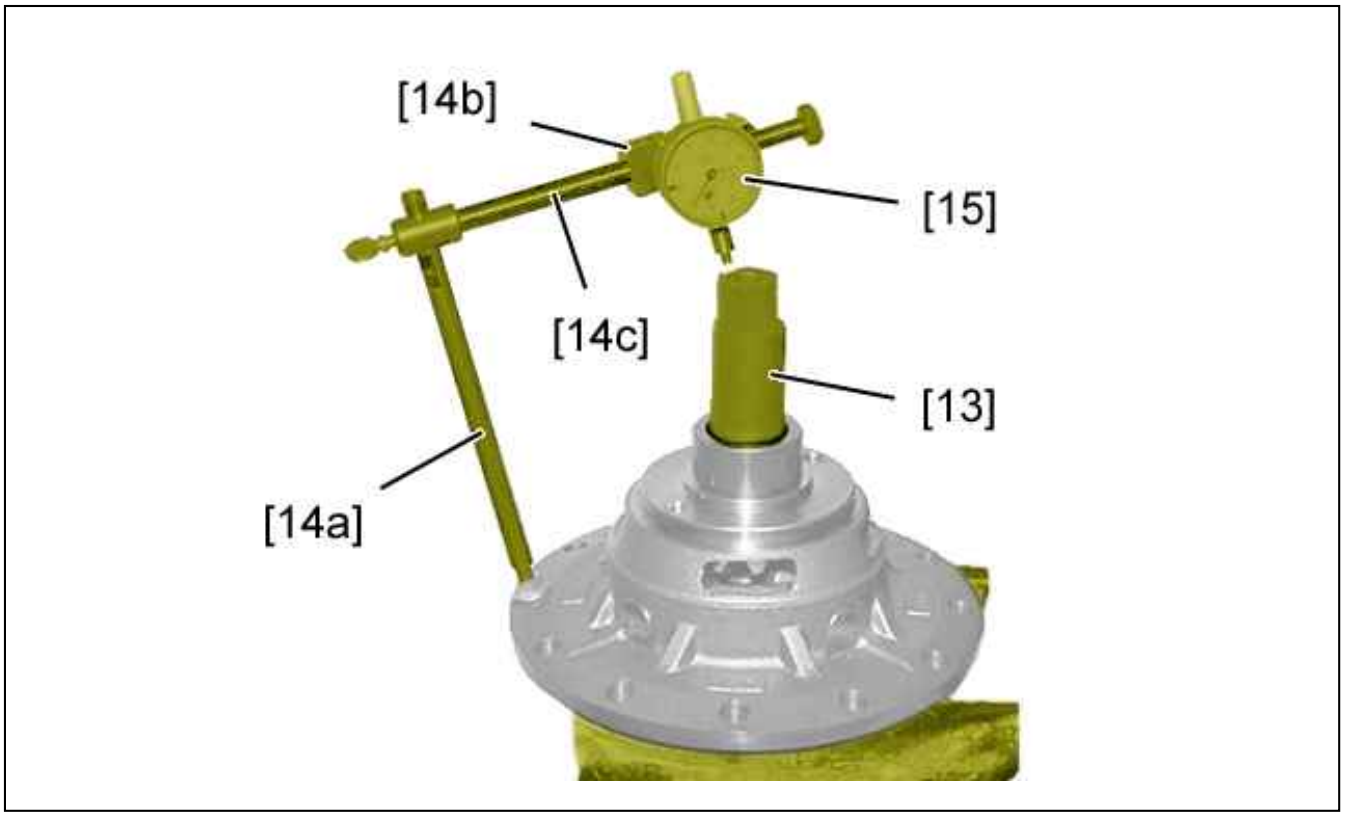

Figure : B2CM04CD

Put into place the following tools :

- The expanding mandrel [13]
- The dial gauge support rod [14a] ; Using the 2 nuts ; Pinch the satellite carrier unit
- The dial gauge support rod [14c]
- The dial gauge support [14b]
- The dial gauge [15]

Rotate the assembly several times ; Using tool [13].
Set the dial gauge to zero.
Take 4 measurements at ? 90? of the clearance operating tool [13] vertically.

CAUTION : Maximum axial play 0,1 mm ; If the result of the measurement is above this value, replace the frictior washer to obtain the correct clearance.

N.B. : The friction washers are available in 7 different thicknesses : 1,55 ; 1,60 ; 1,65 ; 1,70 ; 1,75 ; 1,80 ; 1,85 mm.

Remove the tools [13], [14a], [14b], [14c], [15].

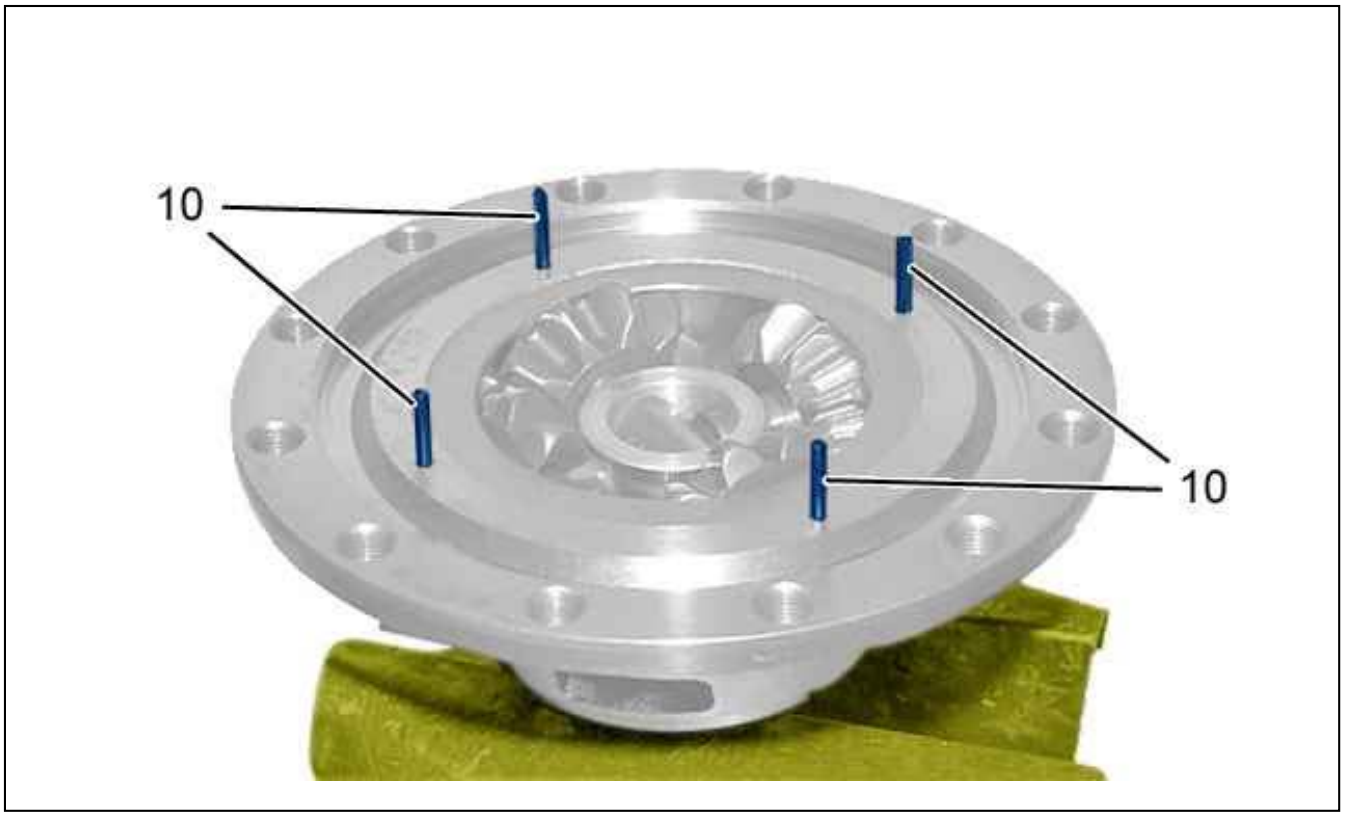

Figure : B2CM04DD

Fit the 4 roll pins that lock the shafts (10).

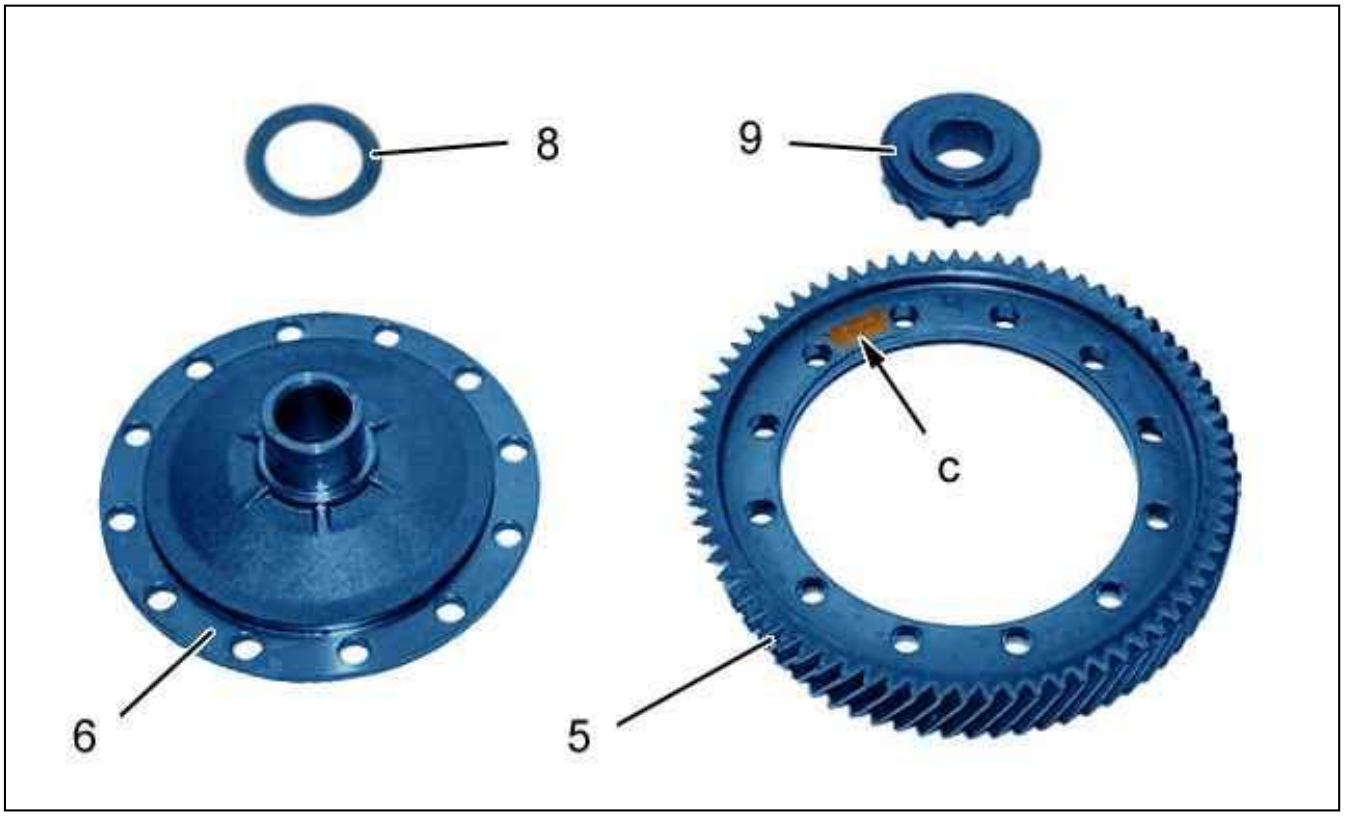

Figure : B2CM04ED

Refit :

- The sun wheel (9)

- A friction washer (8) thick : 1,6 mm
- The flange (6)
- Differential crown wheel (5) (Mark "c" visible)

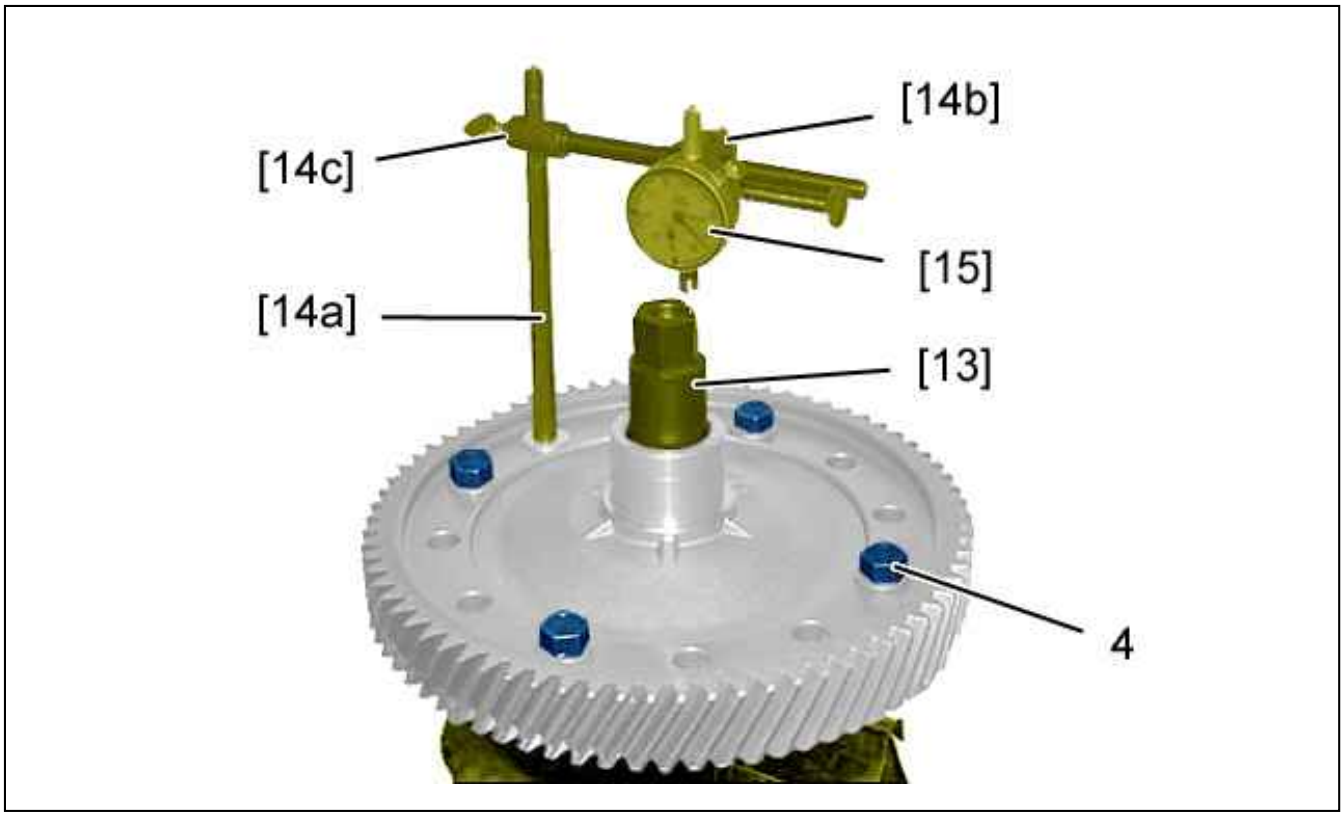

Figure : B2CM04FD

Refit and tighten : The 4 securing bolts (differential box (4)).
Tightening method for the screws (4) :

- Pre-tightening to 2,2 ± 0,1 daN.m
- Angular tightening of 55 ± 1,5 °

Put into place the following tools :

- The expanding mandrel [13]
- The dial gauge support rod [14a] ; Using a washer and a nut ; Pinch the differential carrier
- The dial gauge support rod [14c]
- The dial gauge support [14b]
- The dial gauge [15]

Rotate the assembly several times ; Using tool [13].
Set the dial gauge to zero.
Take 4 measurements at ? 90? of the clearance operating tool [13] vertically.

CAUTION : Maximum axial play 0,1 mm ; If the result of the measurement is above this value, replace the frictior washer to obtain the correct clearance.

N.B. : The friction washers are available in 7 different thicknesses : 1,55 ; 1,60 ; 1,65 ; 1,70 ; 1,75 ; 1,80 ; 1,85 mm.

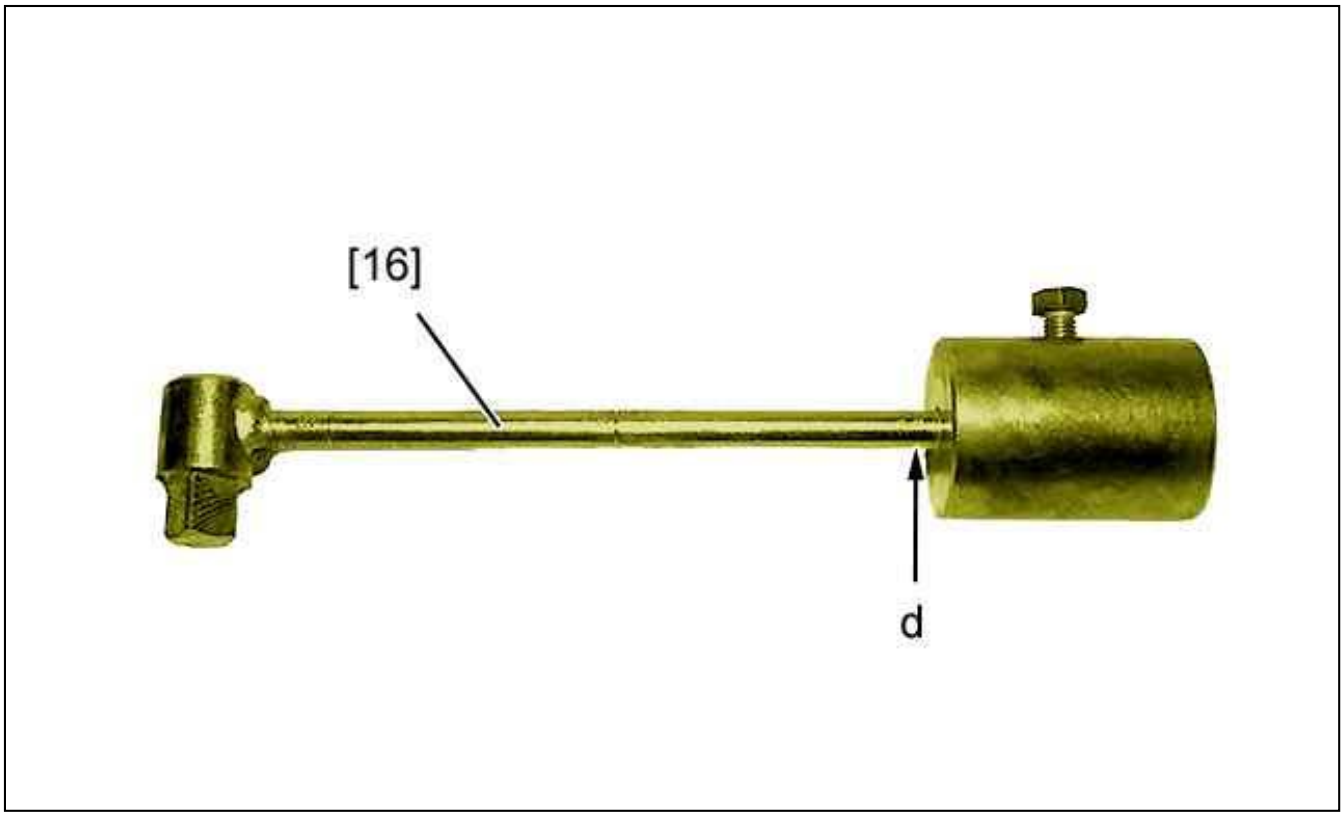

Figure : B2CM04GD

Set tool [16] to mark 0,15.

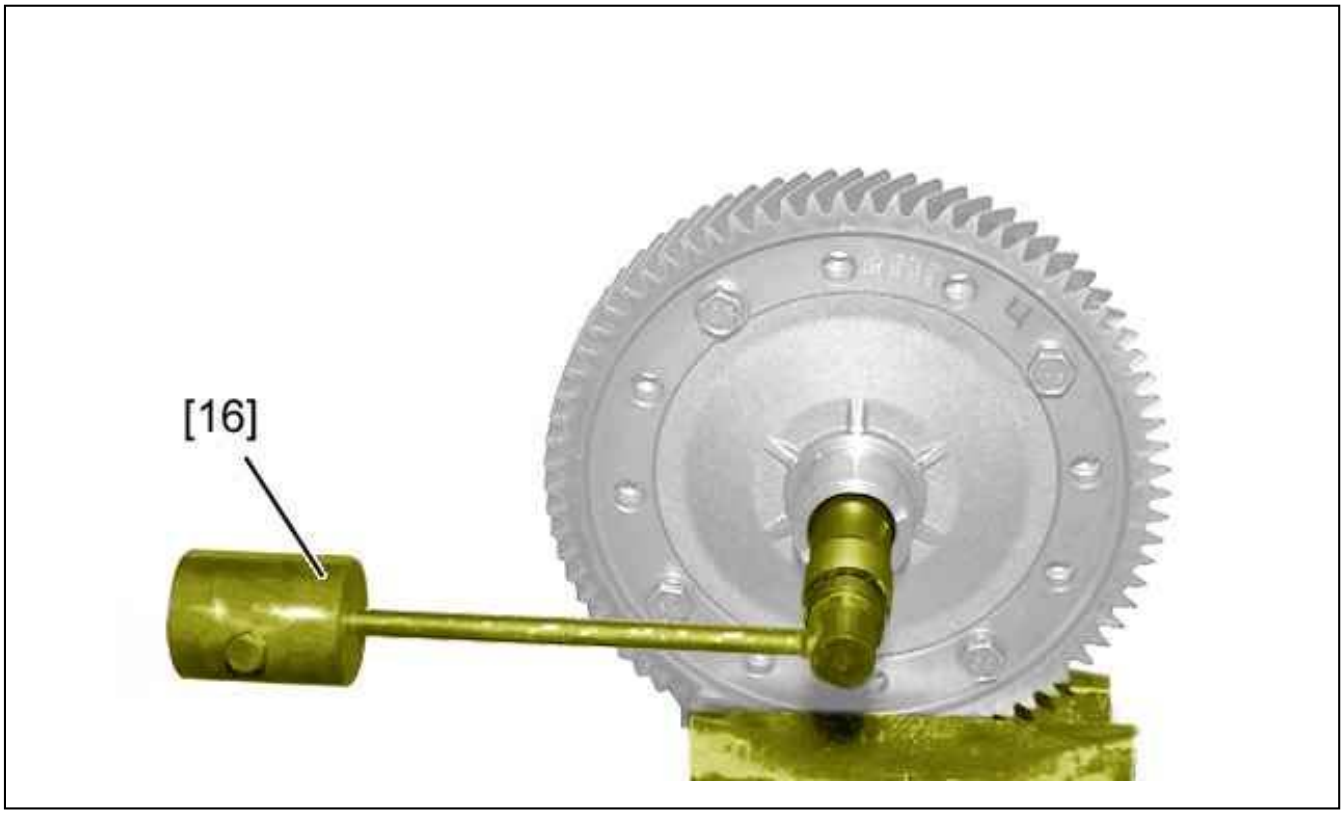

Figure : B2CM04HD

Immobilise the limited slip differential housing in a vice.
Position tool [16] to check the preadjusted drag torque.

Check the drag torque.

CAUTION : If the torque is above 15 daNm (no rotation of the checking tool), increase the clearance on the sun whee on which you read the lowest clearance during the adjustments.



Figure : B2CM045D

Refit : The 12 securing bolts (4) (differential box).
Tightening method for the screws (4) :

- Pre-tightening to 2,2 ± 0,1 daN.m
- Angular tightening of 55 ± 1,5 °

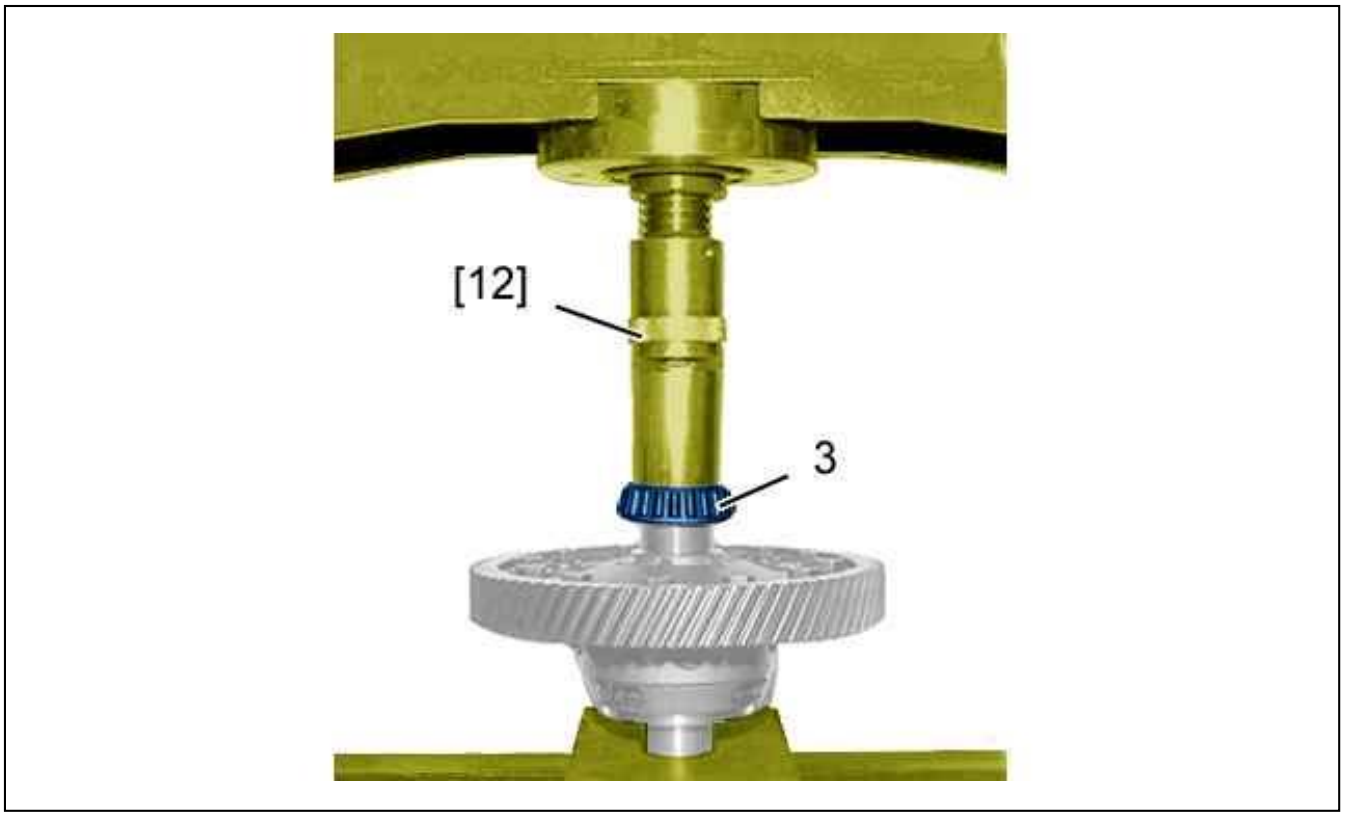

Figure : B2CM04JD

Fit the bearing (3) ; Using tool [12] and press .

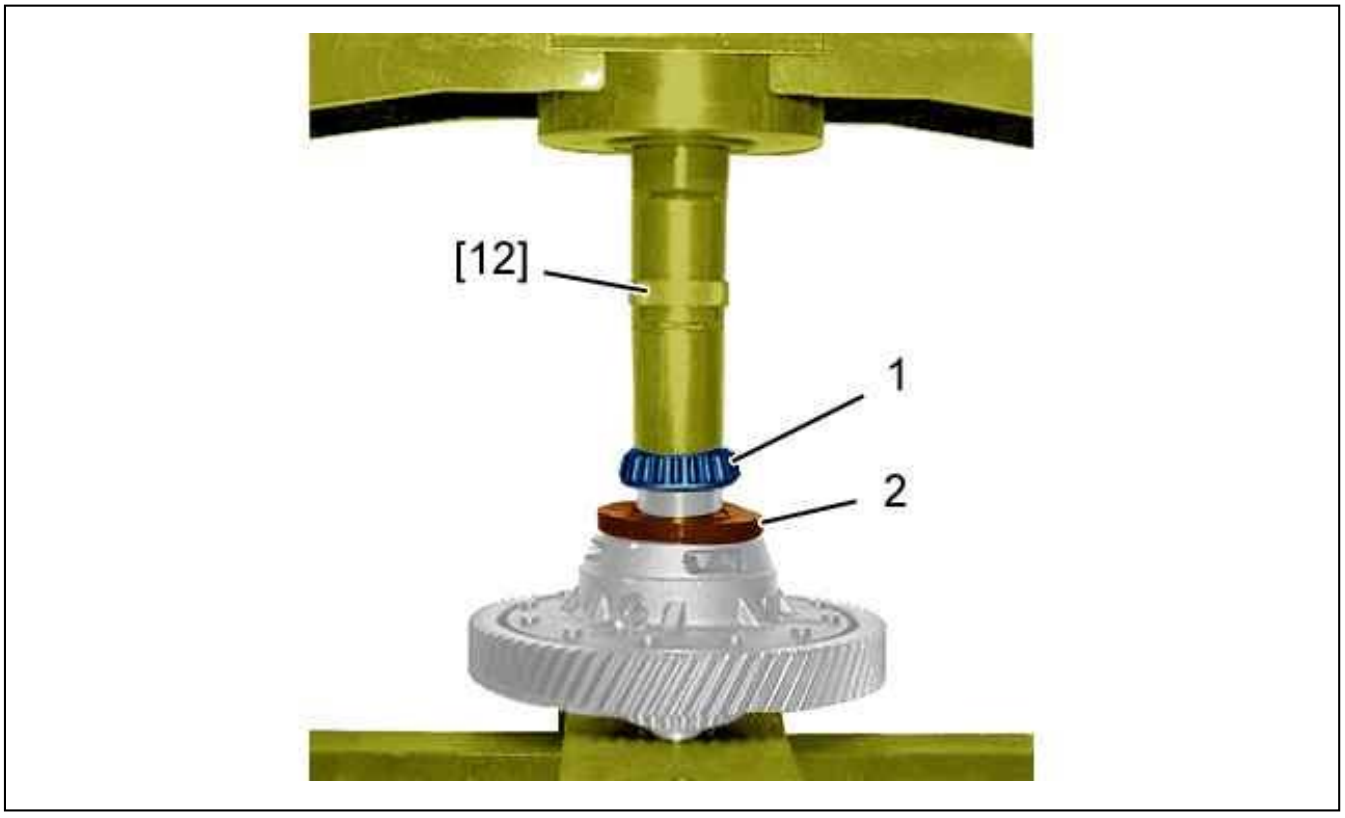

Figure : B2CM04KD

Refit :

- The speedometer drive gear (2)

- The bearing (1) ; Using tool [12] and press

5. Casing

5.1. Gearbox casing

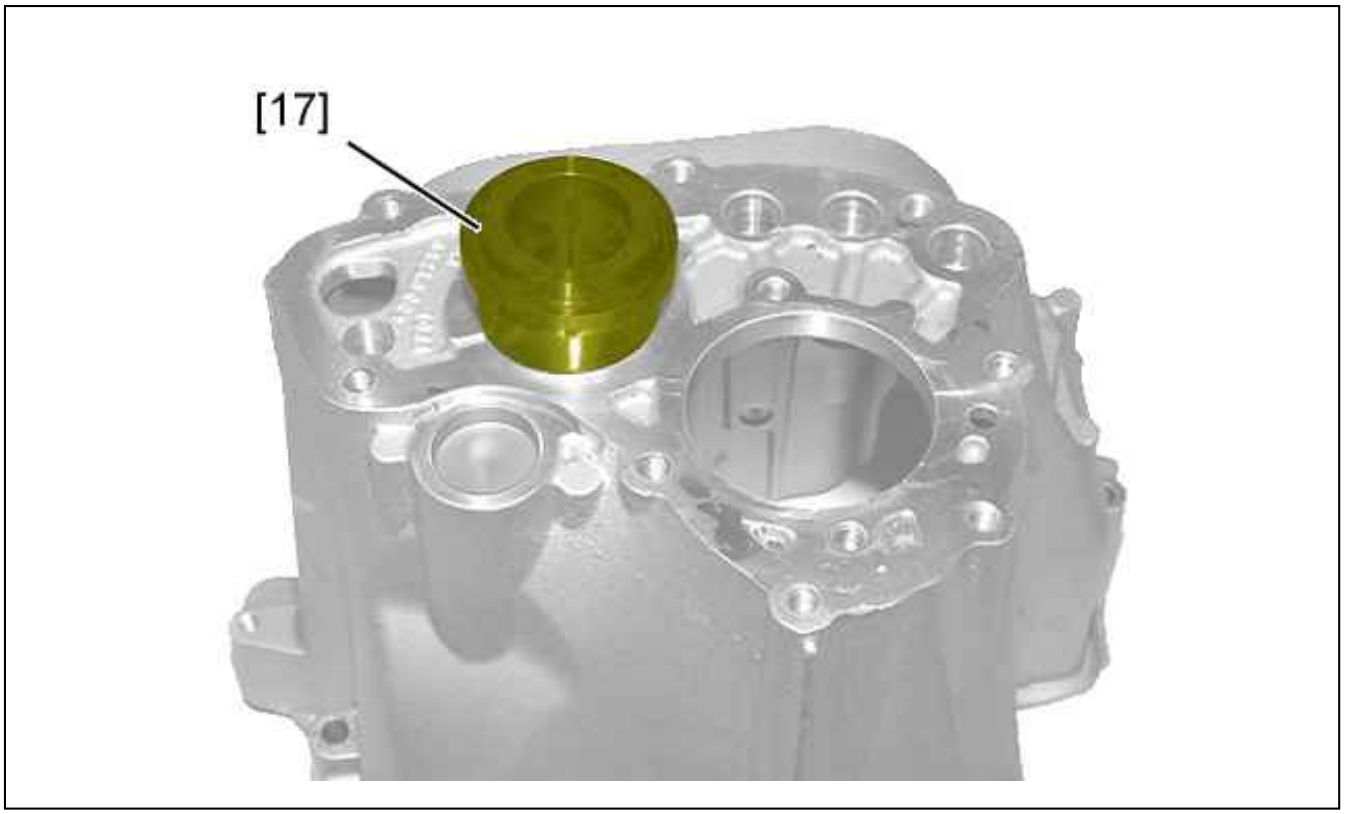

Figure : B2CM04LD

Remove : The external cage of the main shaft bearing (6th gear end) ; Using tool [17] and press .
Retrieve the adjusting shim .

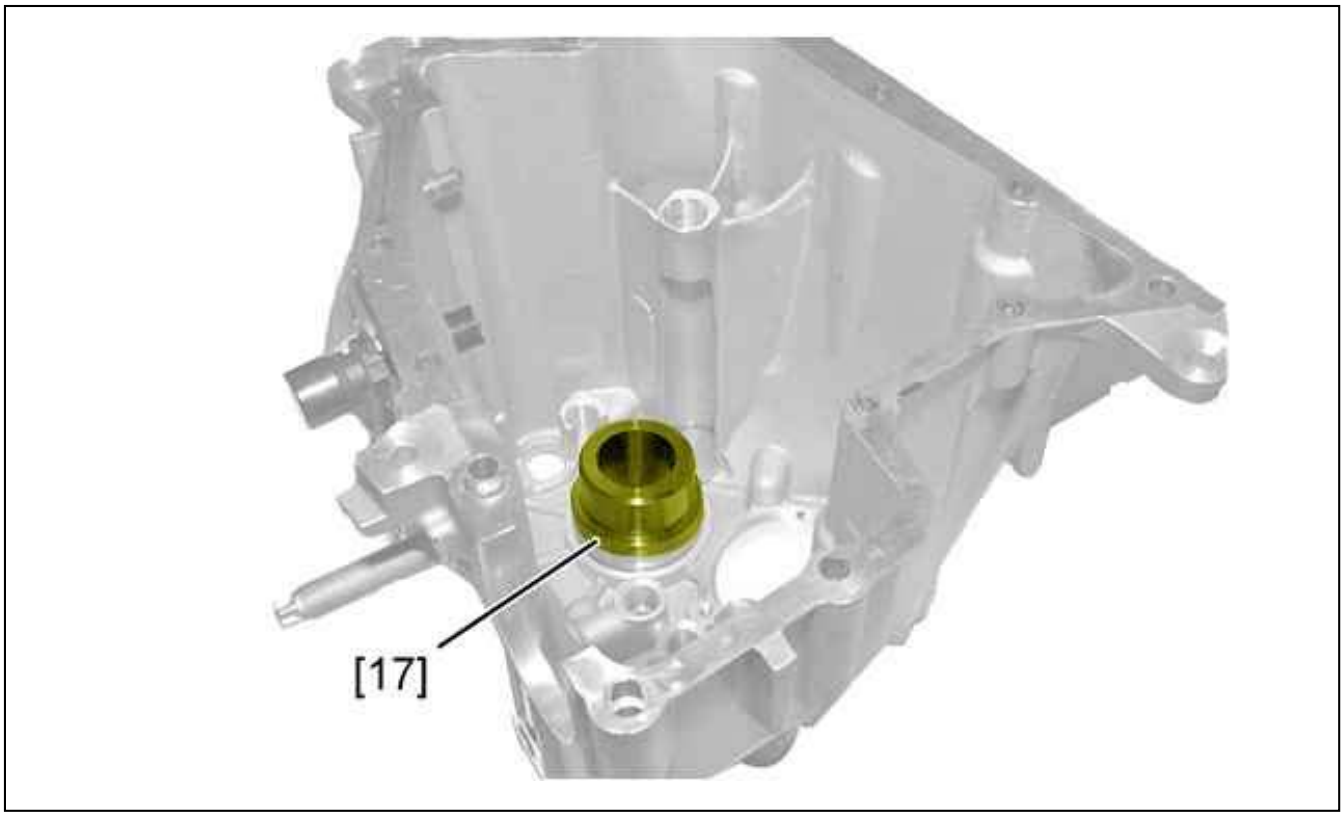

Figure : B2CM04MD

Refit :

- An adjustment shim
- The external cage of the main shaft bearing (6th gear end) ; Using tool [17] and press

N.B. : The adjustment shim must compensate for the clearance as far as possible (Supplied by the Replacement Parts Division).

5.2. clutch housing

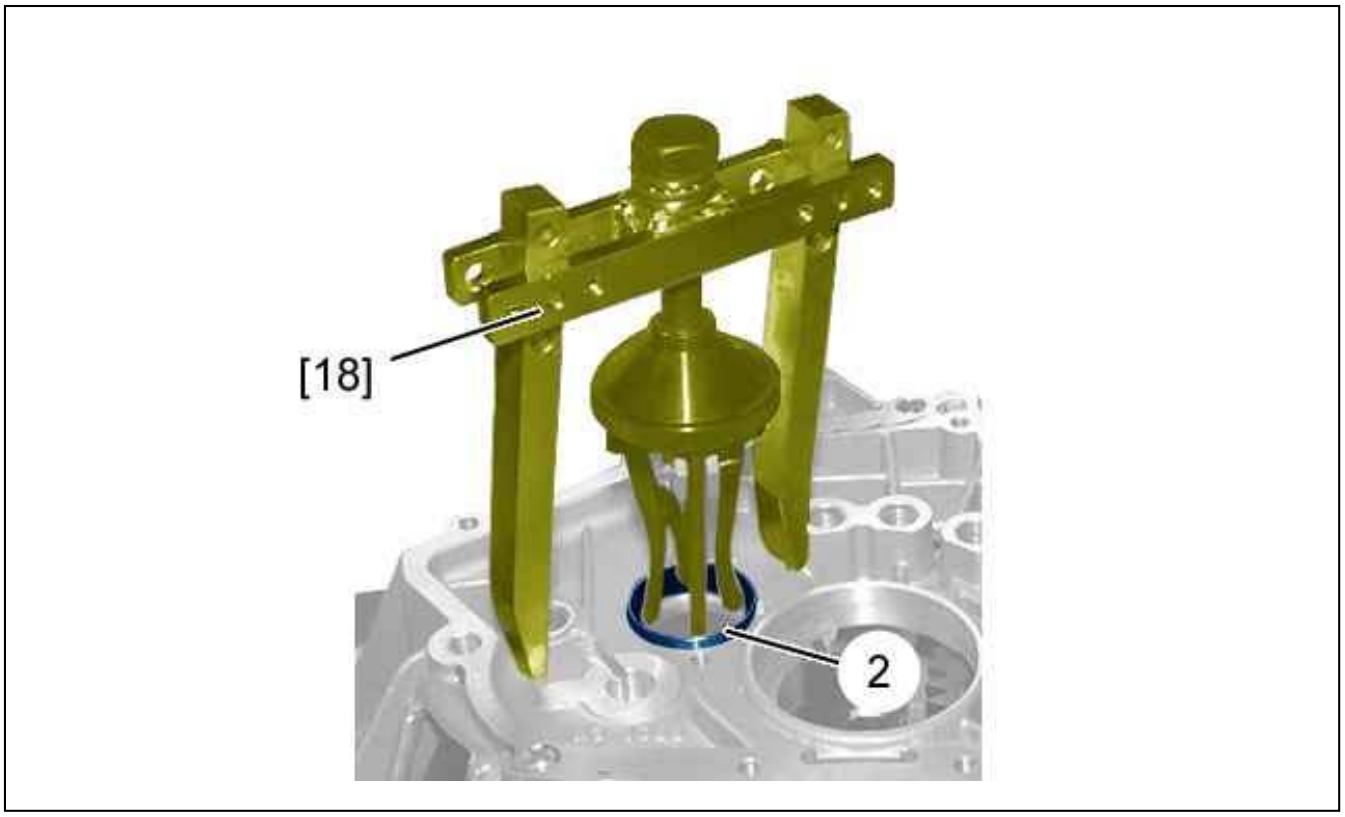

Figure : B2CM04ND

Remove : The external cage of the main shaft bearing (2) 1st gear end) ; Using tool [18].
Refit : The external cage of the main shaft bearing (2) 1st gear end).

REMOVING - REFITTING : GEARBOX CONTROLS

ESSENTIAL : Observe the safety and cleanliness recommendations .

1. Tooling

tool	Reference	Designation
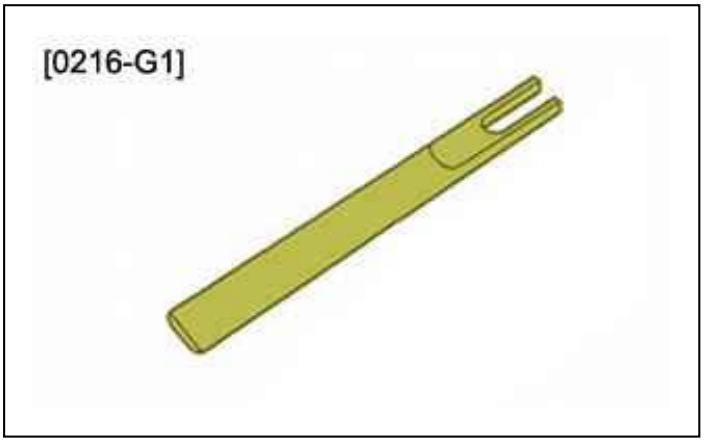 Figure : E5AB0BTT	[0216-G1]	tool for unclipping Ø 10 mm ball-joints
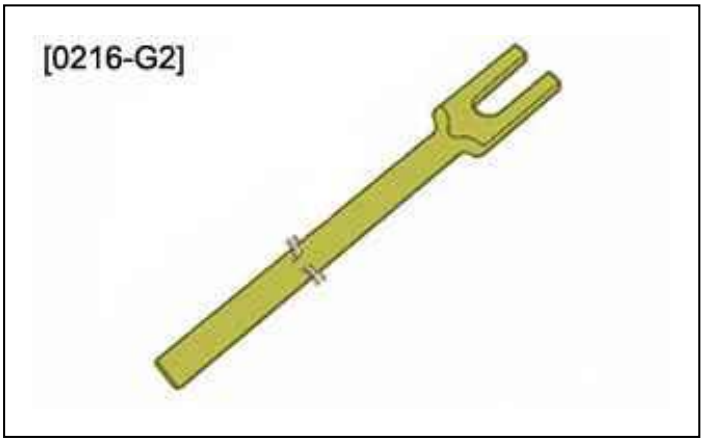 Figure : E5AB0BUT	[0216-G2]	tool for unclipping Ø 13 mm ball-joints

2. Removing

Disconnect the ancillaries battery.
Remove the air filter housing .
Place the vehicle on a 2-post lift.
Lift and support the vehicle.

2.1. Under the vehicle

The gears are selected by means of cables :

- Gear selection control cable

- Gear engagement control cable

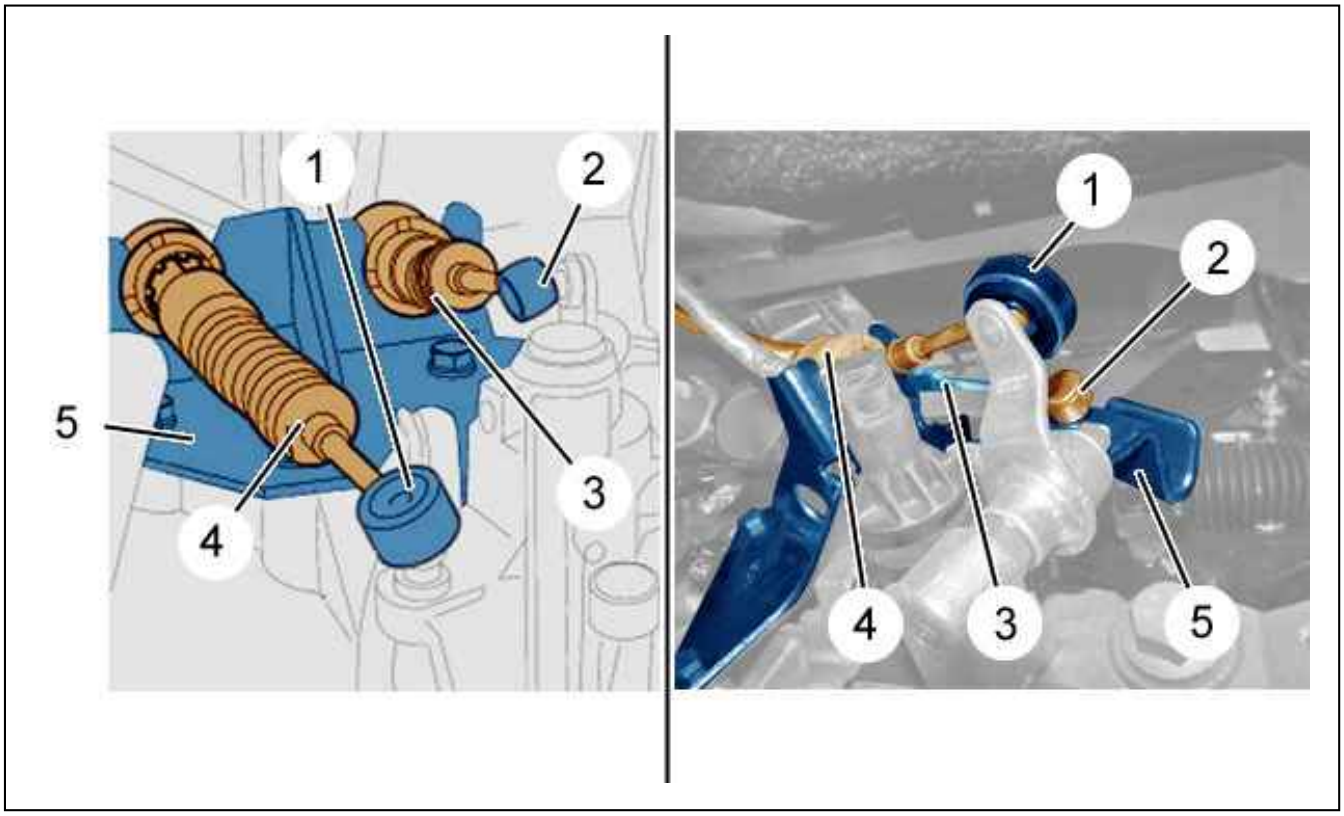

Figure : B2CG2EFD

Uncouple (according to equipment) :

- The ball joint (1) ; Using tool [0216-G1]
- The ball joint (2) ; Using tool [0216-G2]

Remove the cable stops from the bracket (5).
Disengage the gear selection and engagement control cables (3), (4) from the support (5).

2.2. In the vehicle

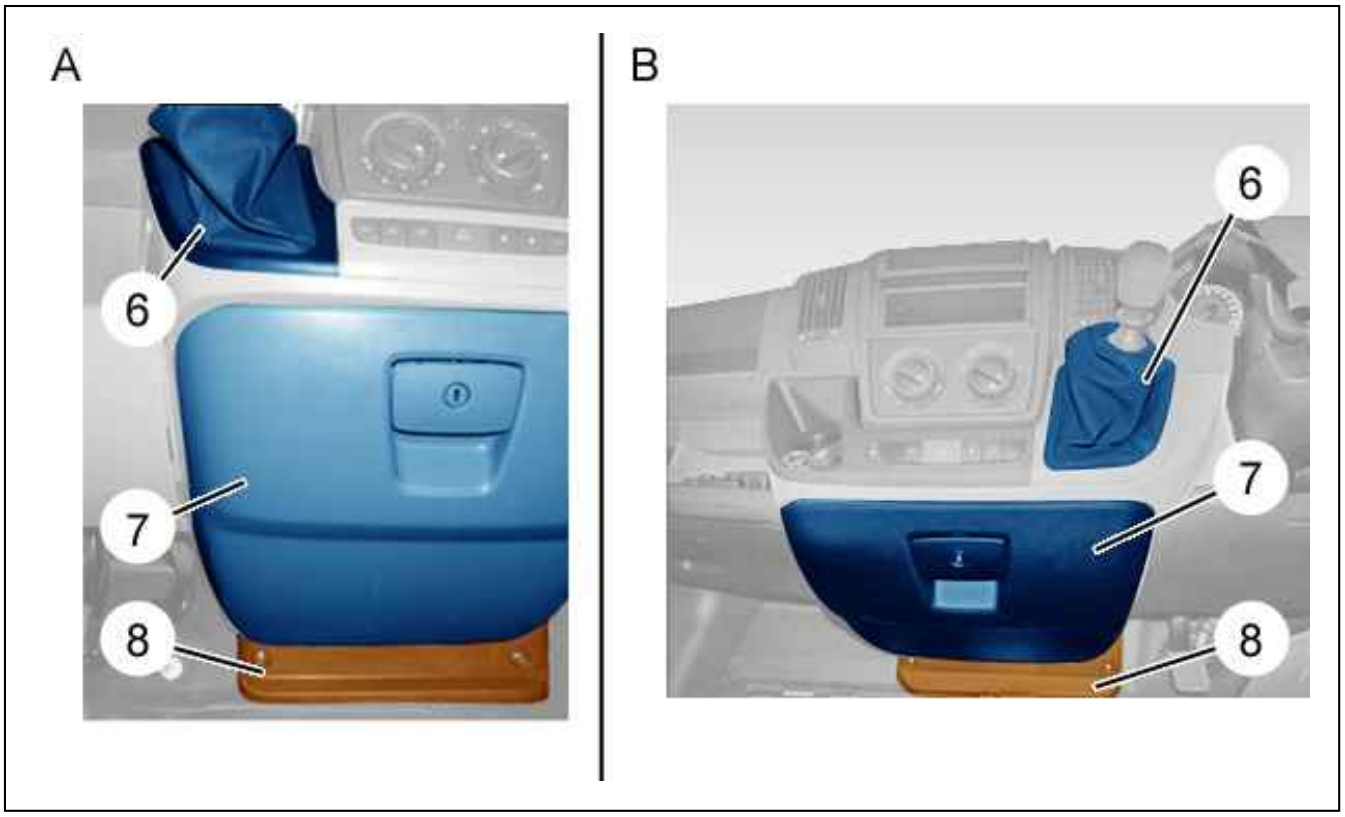

Figure : B2CG2EGD

"A" : left-hand drive.
"B" : right-hand drive.
Remove :

- The gear lever gaiter (6)
- The central glovebox assembly (7)
- The central glovebox lower trim (8)

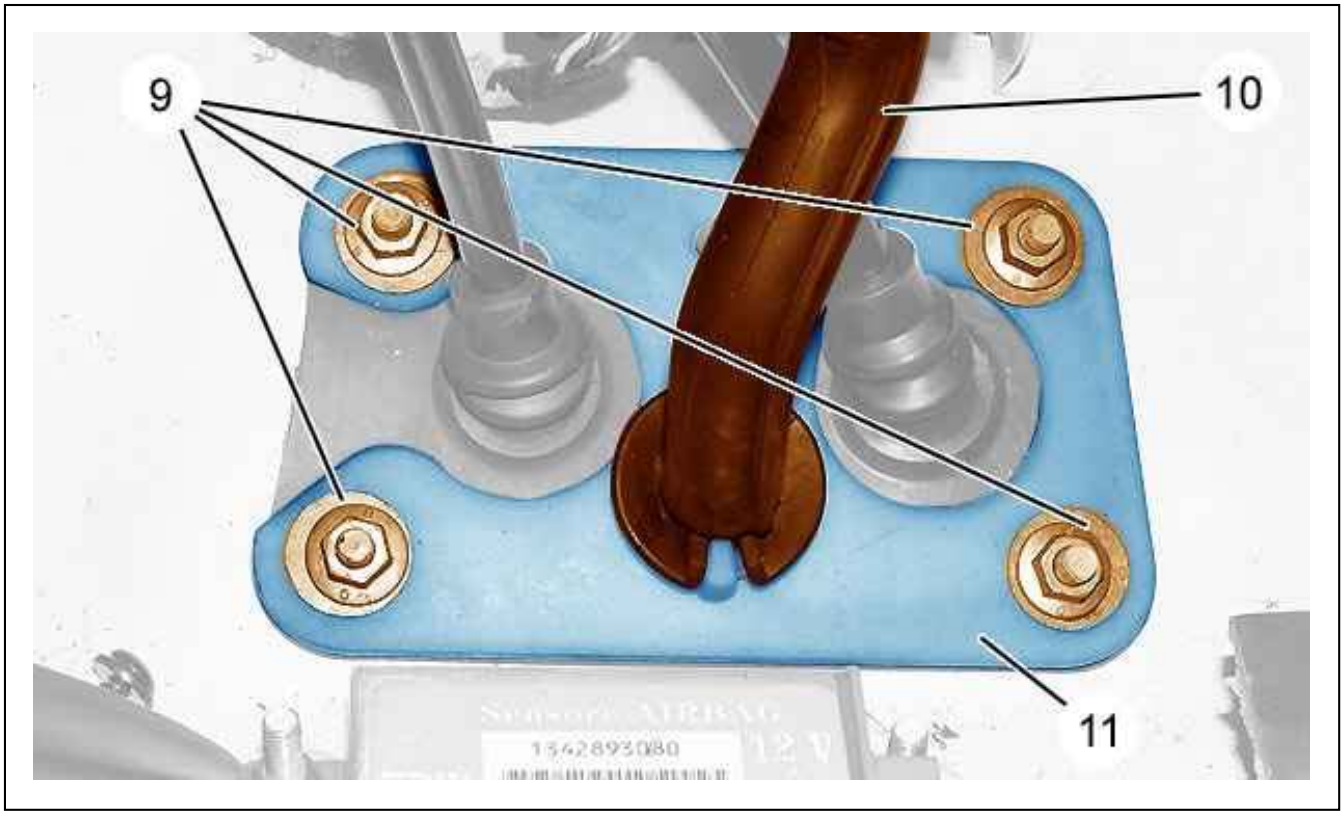

Figure : B2CP497D

Remove :

- The evaporator condensation discharge pipe (10) (according to equipment)
- The nuts (9)
- The assembly of the fixing plate (11) with the gear selection and engagement control cables (3), (4)

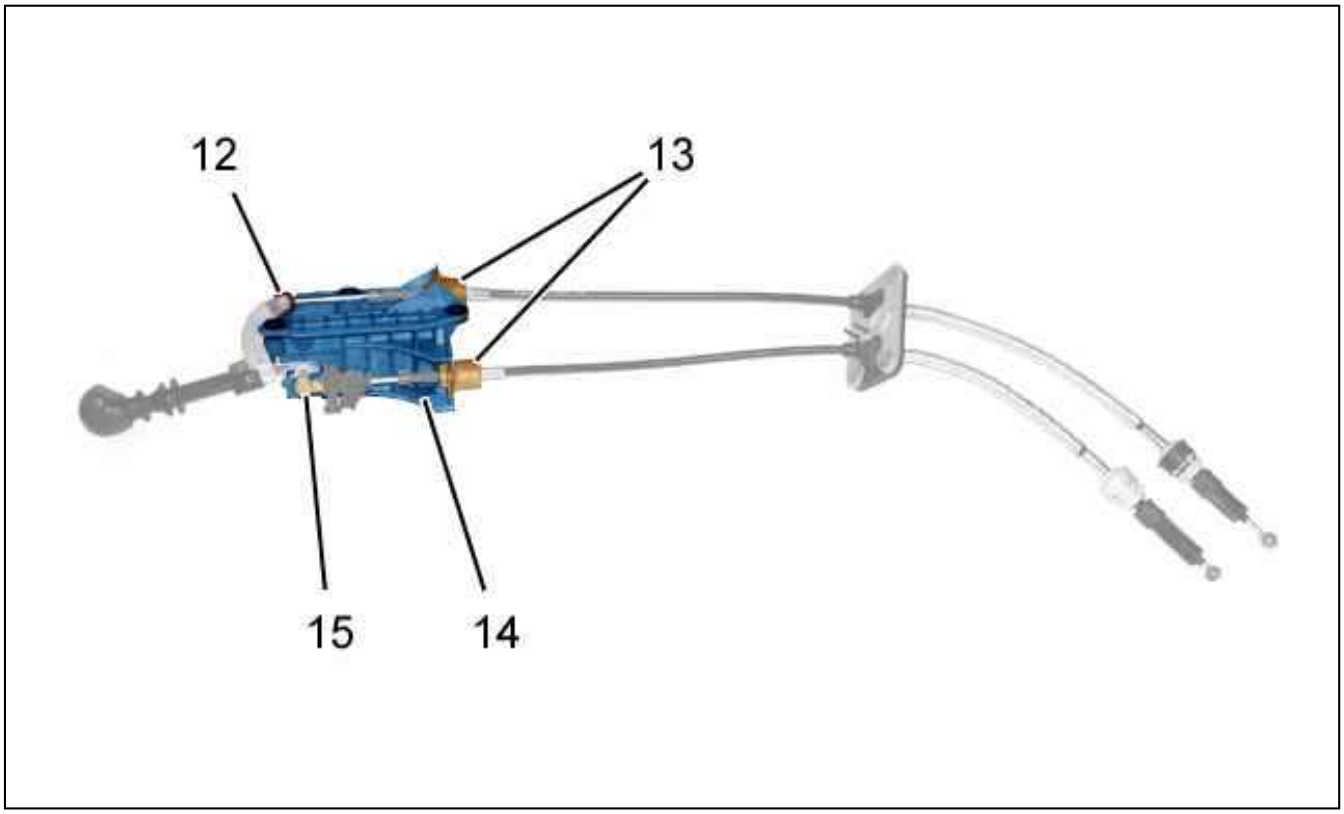

Figure : B2CP498D

Remove the fixing screws of the mounting (14).
Uncouple :

- The ball joint (12) ; Using tool [0216-G2]
- The ball joint (15) ; Using tool [0216-G1]

Remove :

- The cable stops (13)
- Gear selection and engagement control cables (3), (4)
- The bracket (14)

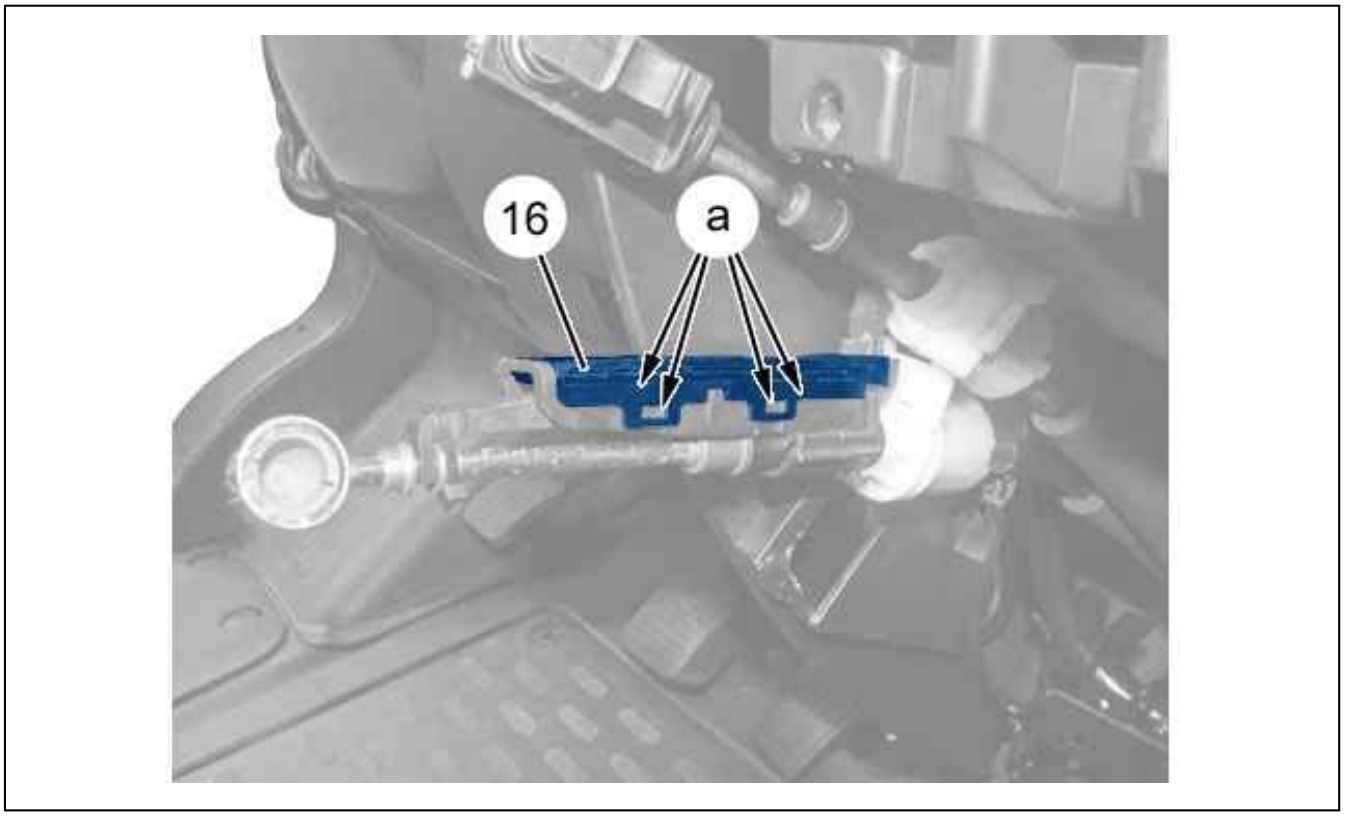

Figure : B2CG2PRD

Unclip and remove the gear control top dead centre sensor (16) (at "a") (according to equipment).

3. Refitting

3.1. In the vehicle

Refit :

- Gear selection and engagement control cables (3), (4)
- The fixing plate assembly (11)
- The nuts (9)
- The evaporator condensation discharge pipe (10) (according to equipment)
- The gear control top dead centre sensor (16) (at "a") (according to equipment)
- The bracket (14)
- The sleeve stops (13)
- The ball-joints (12), (15)
- The fixing screws of the mounting (14)
- The central glovebox lower trim (8)

3.2. Under the vehicle

Refit :

- The sleeve stops on the support (5)
- The ball-joints (1), (2)

Adjust the gear controls.

4. Gearbox controls adjustment

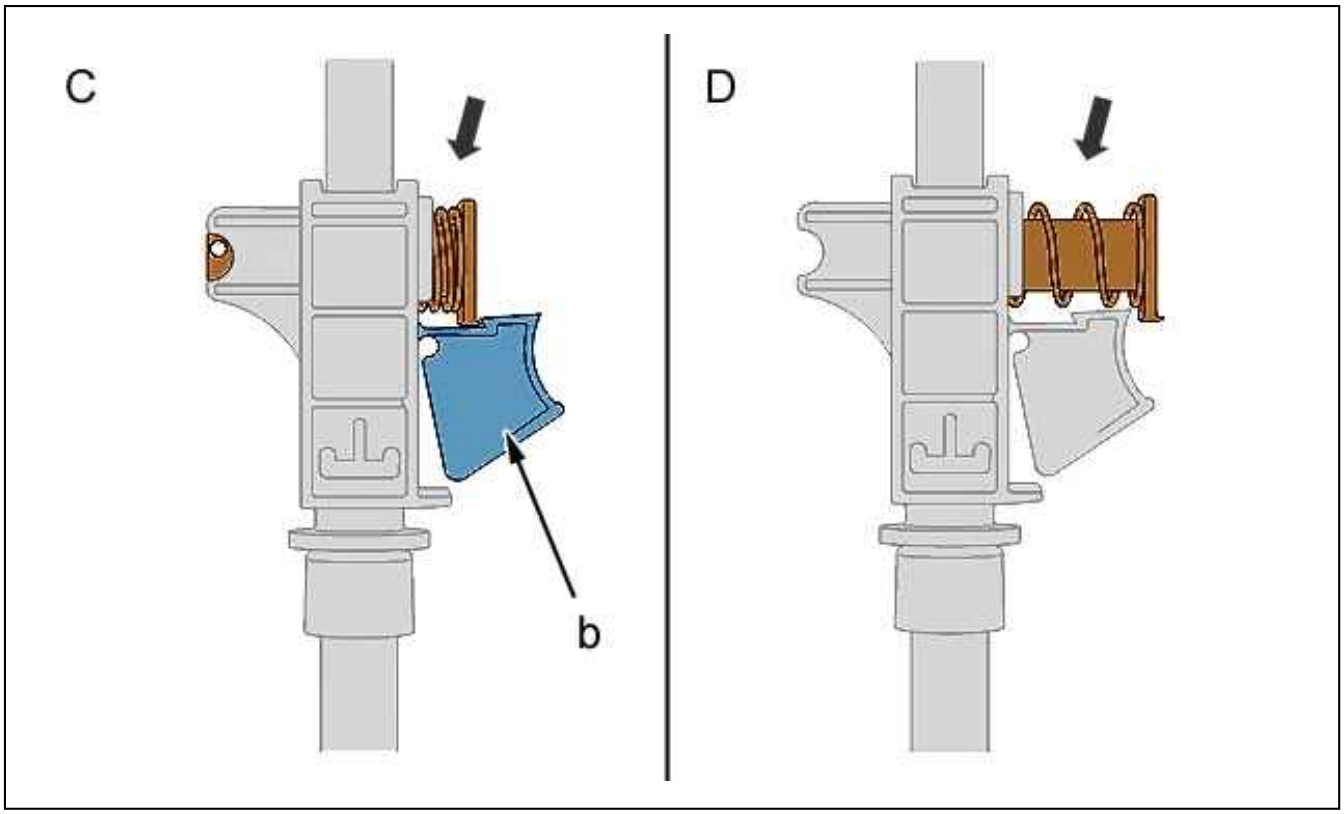

Figure : B2CG2PSD

"b" : Button for locking or unlocking the automatic adjustment mechanism.
Device for automatic adjustment of the gear selection control cable :

- "C" : Unlocked position
- "D" : Locked position

N.B. : Before making the adjustment, check that the automatic adjustment device remains in its correct position "C".

Place the gear lever in the first gear position.

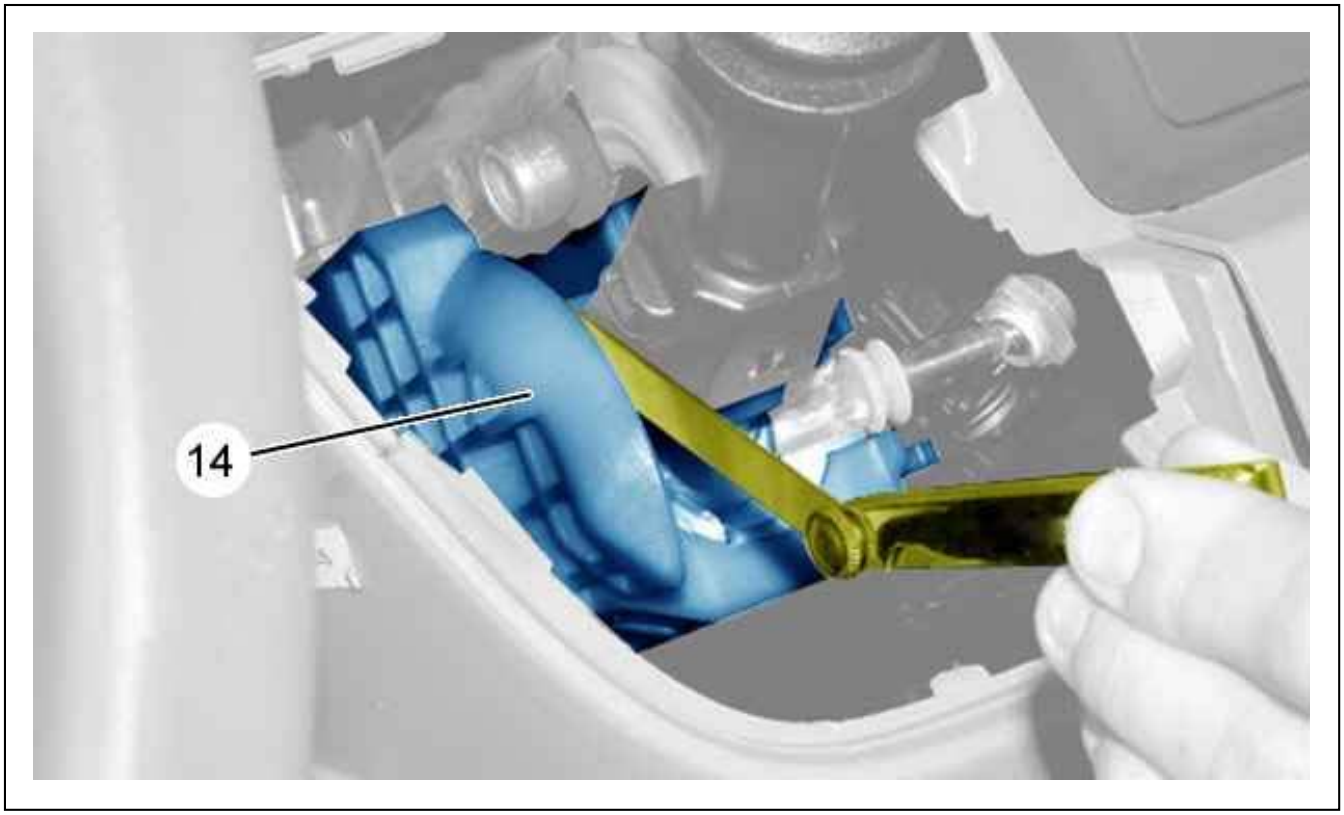

Figure : B2CG2EHD

Insert a 1 mm shim between the gear lever and the mounting (14).
Press button " b " to move the automatic adjustment device to position (D).

N.B. : The length of the gear selection control cable is adjusted.

5. Subsequent operations

Refit :

- The central glovebox assembly (7)
- The gear lever gaiter (6)
- The air filter casing

CAUTION : Perform the operations that are required following a reconnection of the ancillaries battery.

Reconnect the ancillaries battery.
Carry out a road test, changing through all the gears to make sure there is no fault.

DISMANTLING : MANUAL GEARBOX

1. Removing : Gearbox casing

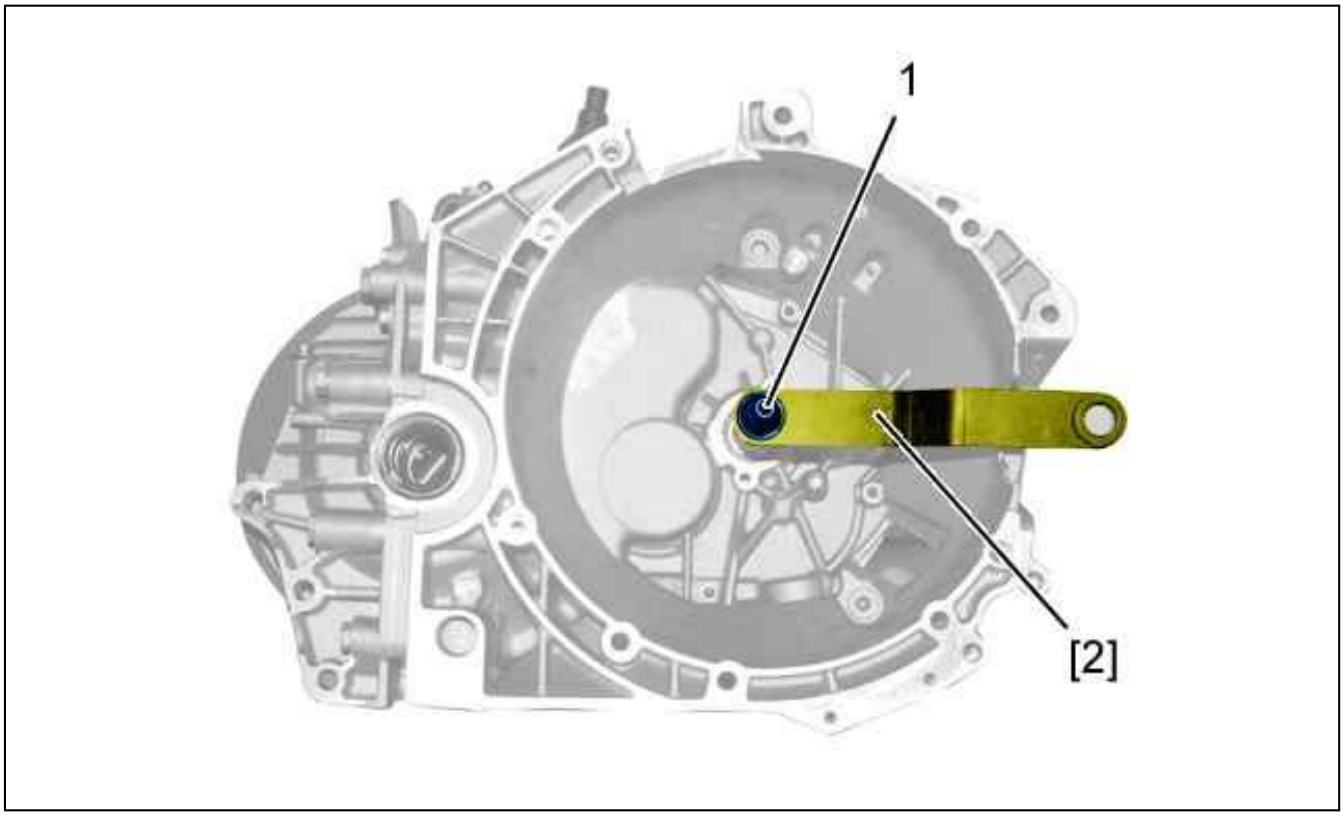

Figure : B2CM02YD

Engage a gear.
Place tool [2] on the input shaft (1).

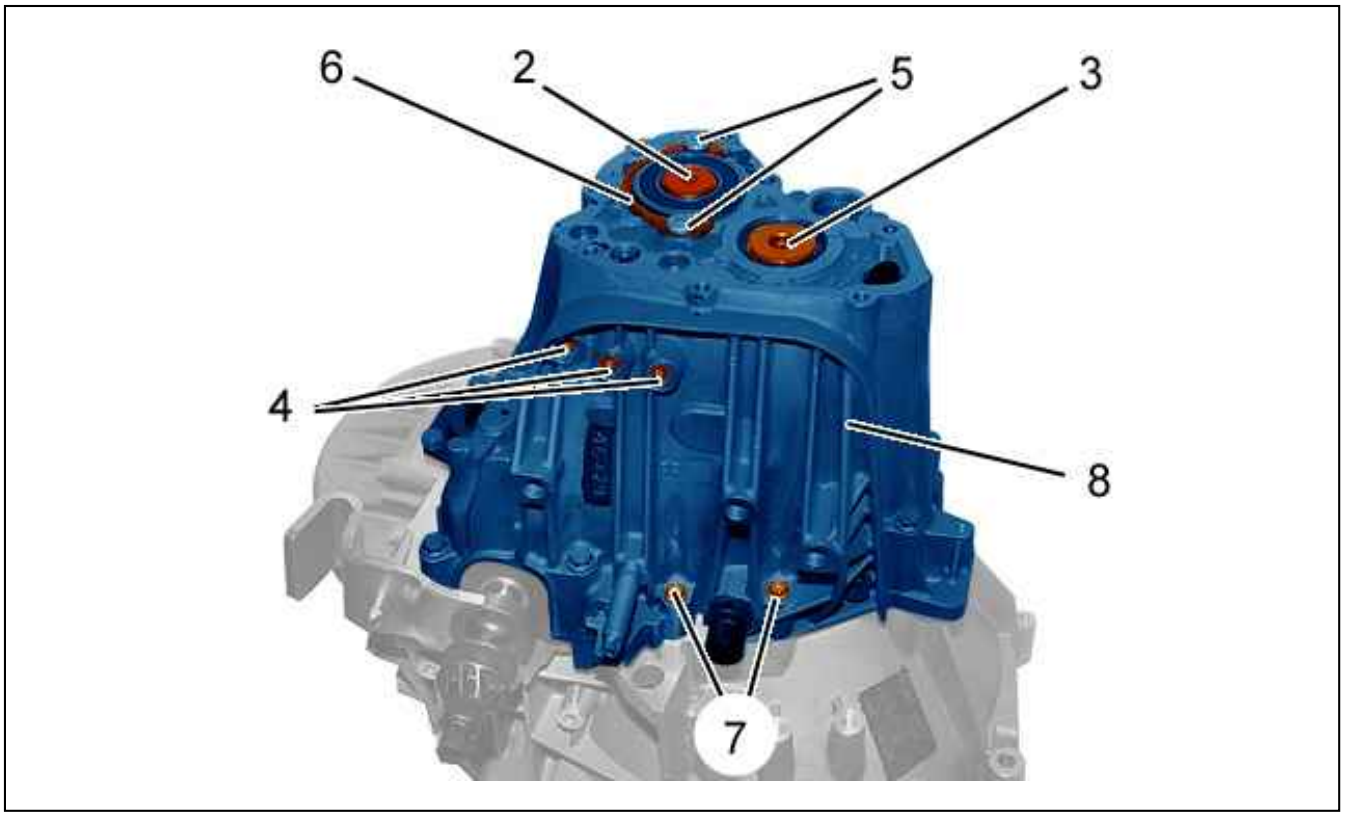

Figure : B2CM02ZD

Remove the secondary shaft screw (2).
Remove the primary shaft screw (3) ; Using tool [4].
Remove :

- The 3 locking caps (4) (save the springs and the balls)
- The securing bolts (5) (Stop ring)
- The stop ring (6)
- The gearbox casing fixing bolts (7)
- The gearbox casing (8)

N.B. : Detach the gearbox casing, using a non-cutting lever in the locations provided.

2. Removing : Primary and secondary shafts

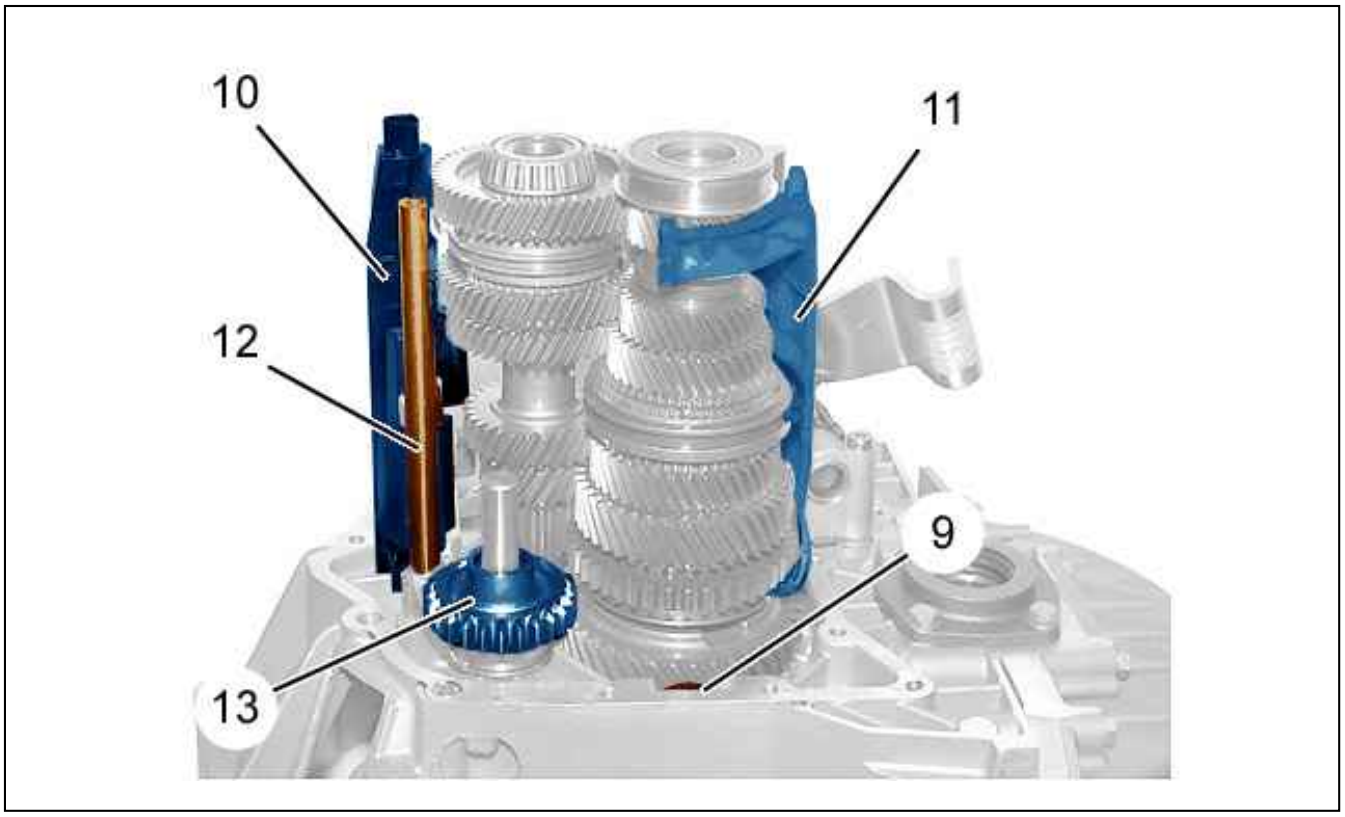

Figure : B2CM030D

Remove :

- The magnetic shim (9)
- The oil ducts (10), (11)
- The reverse gear shaft (12) /reverse gear (13) assembly

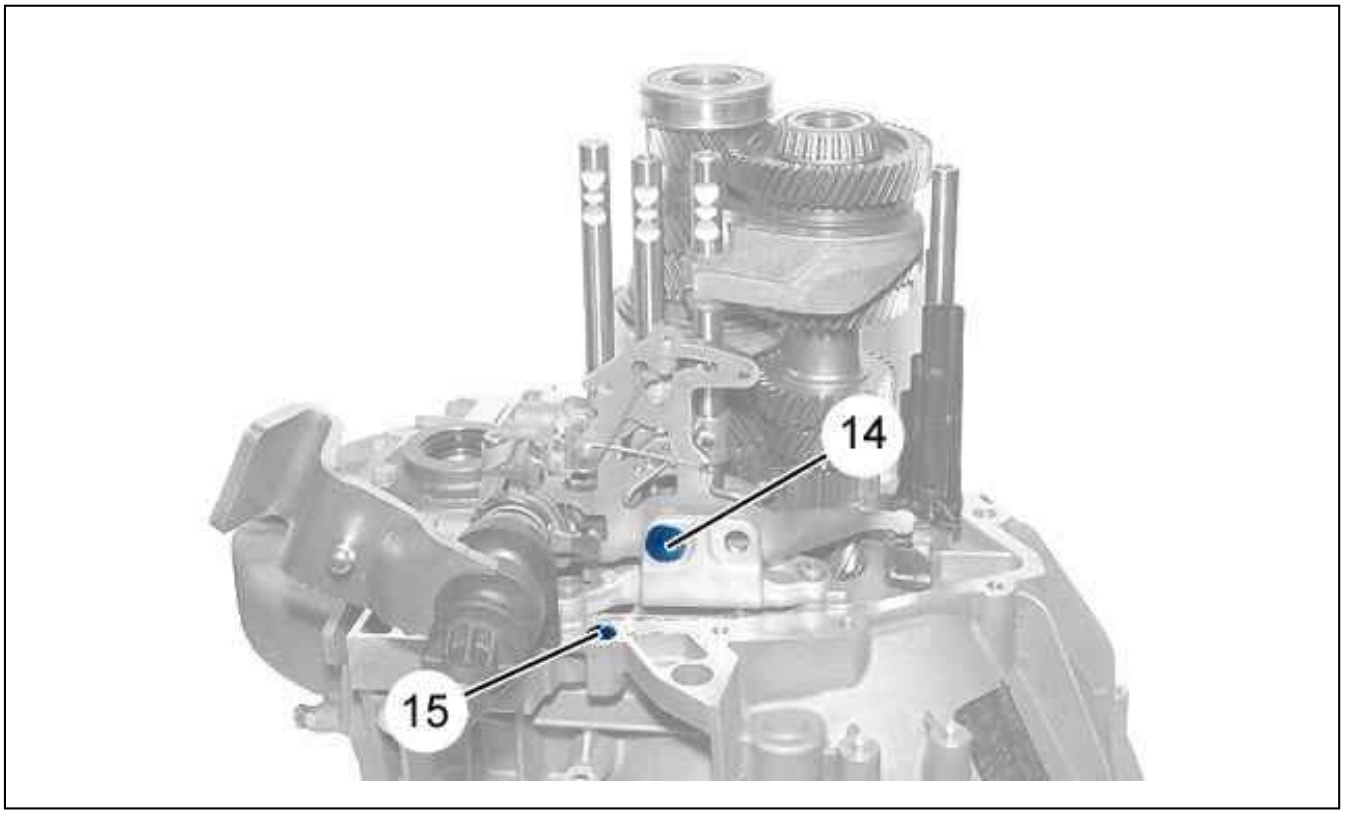

Figure : B2CM031D

Remove :

- The rocking lever shaft (14)
- The centring pin (15)

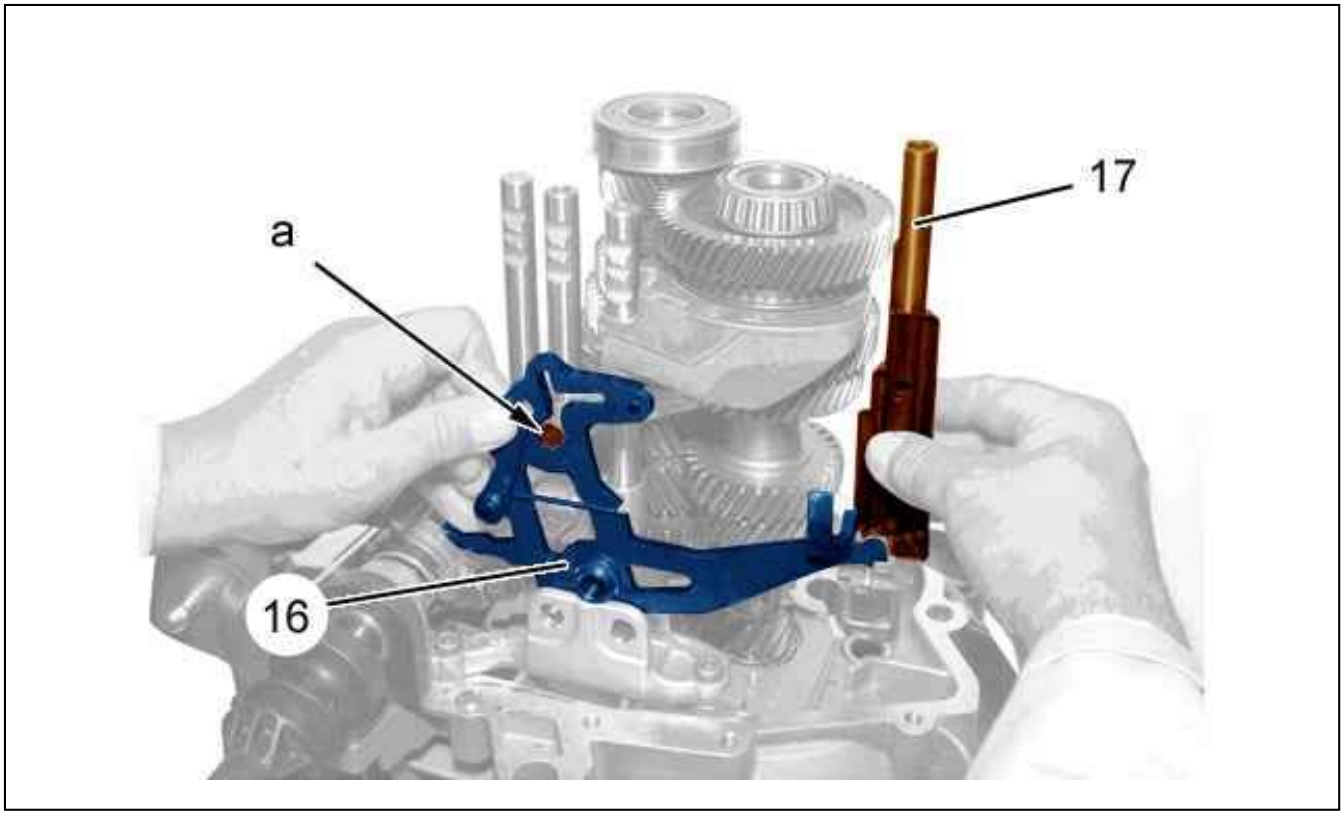

Figure : B2CM032D

Remove the reverse gear rocker lever (16) /reverse gear fork (17) assembly.

N.B. : Raise the reverse gear rocker lever vertically to the pin "a" ; Release the assembly by pulling it towards you.

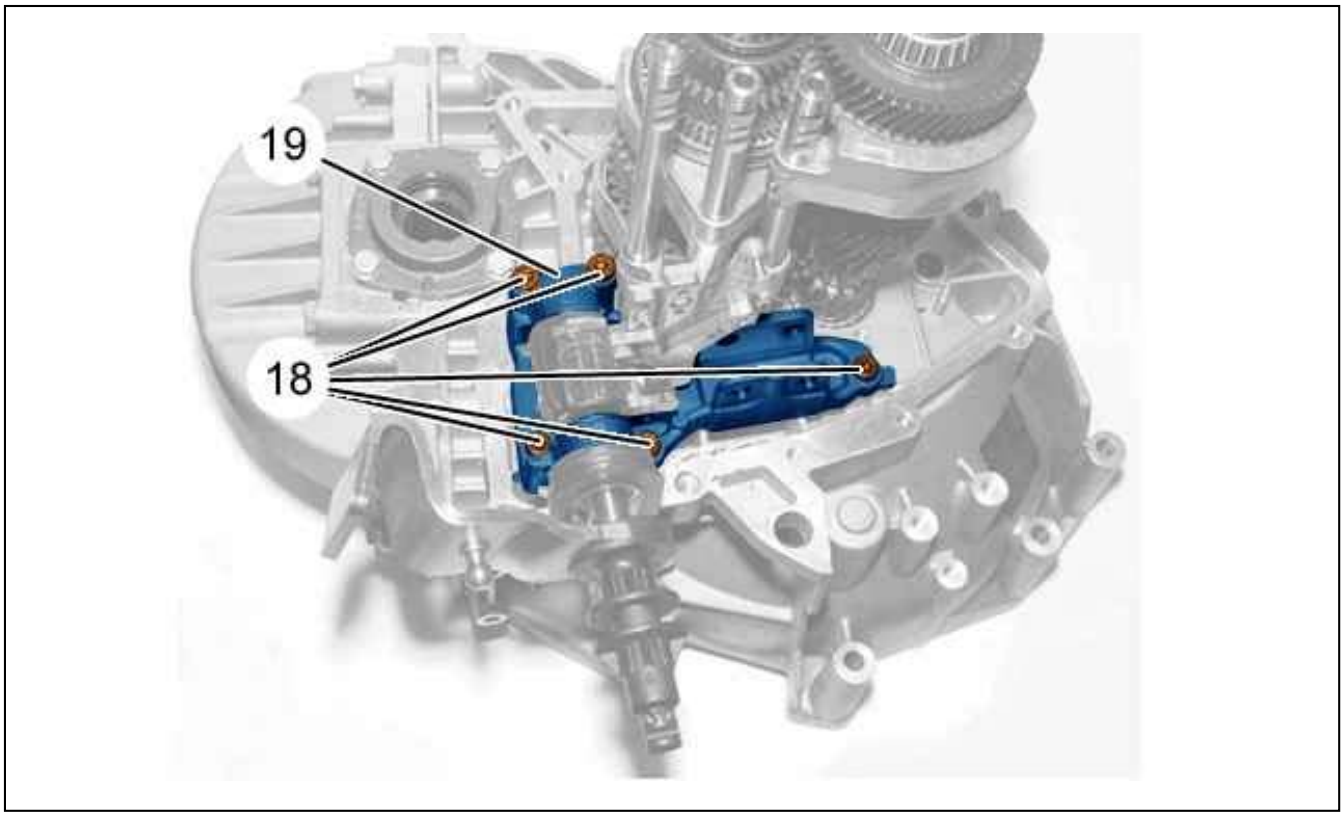

Figure : B2CM033D

Remove the 5 gear control plate (19) bolts (18).

CAUTION : During this operation, take care not to scratch the joint face of the casing .

Lift the gear control plate (18) and disengage the centring pins.
Engage 2nd, 4th and 6th gears.

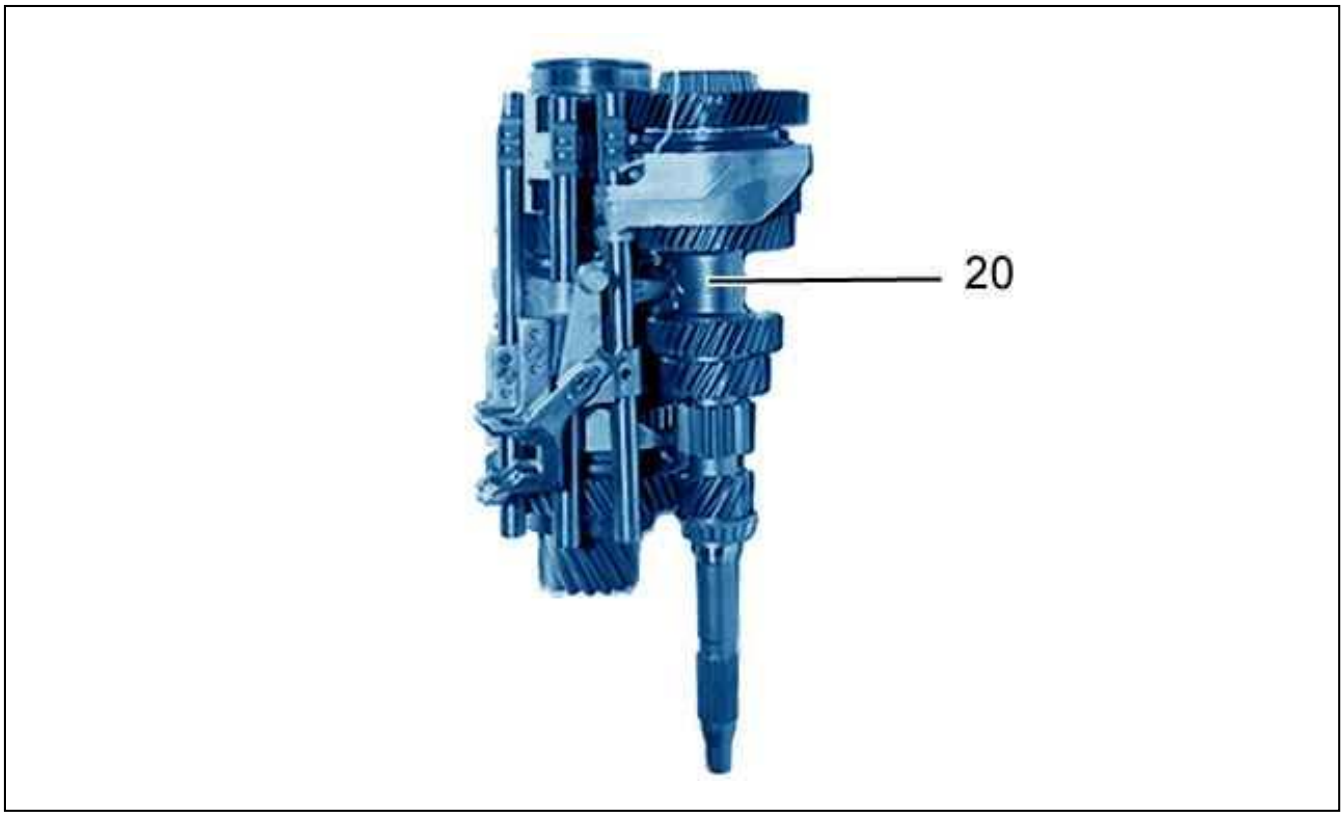

Figure : B2CM034D

Remove the primary shaft, secondary shaft 1st-2nd fork, 3rd-4th fork and 5th-6th fork assembly (20).

3. Removing : Differential housing

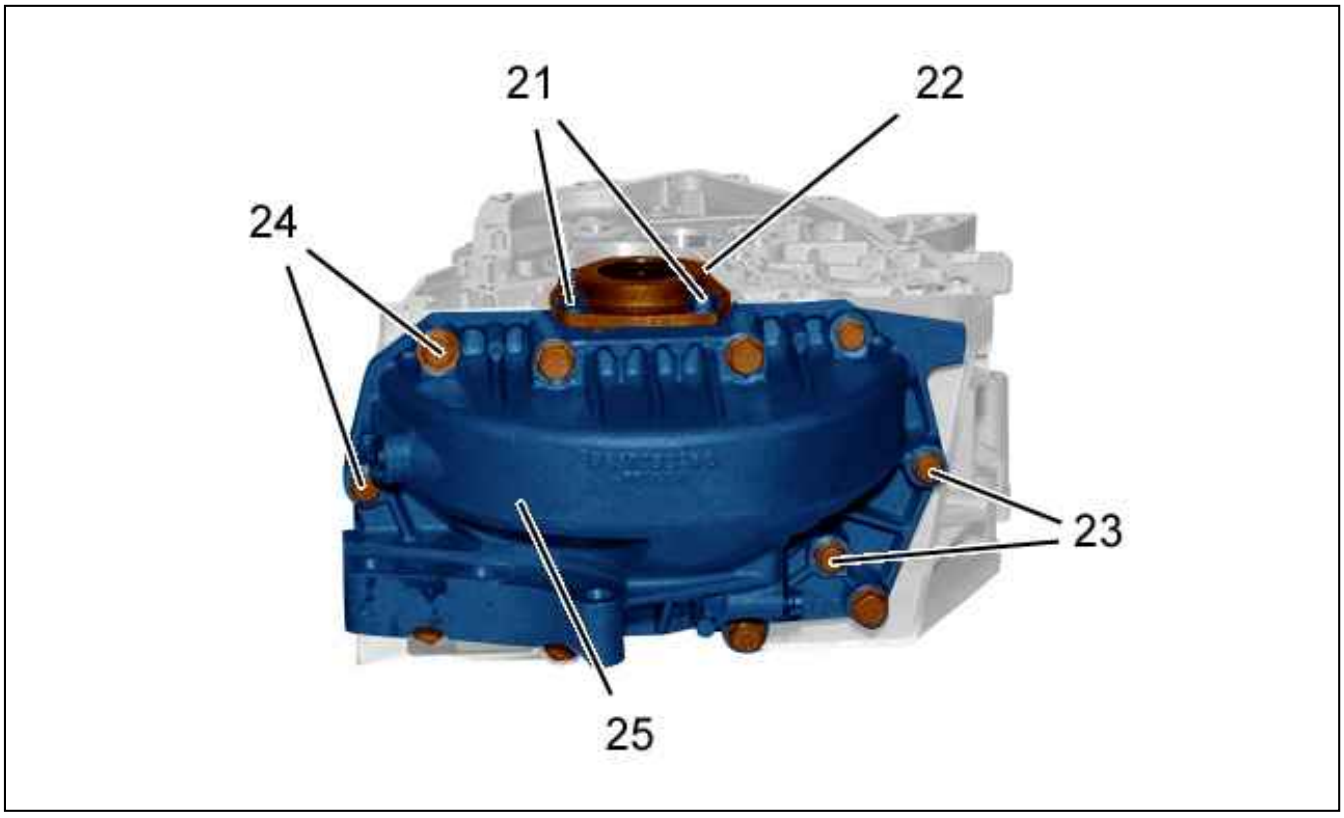

Figure : B2CM035D

Remove :

- The bearing thrust plate (21) bolts
- The bearing thrust plate (22)
- The bolts M8 (23), M10 (24)
- The differential housing (25)

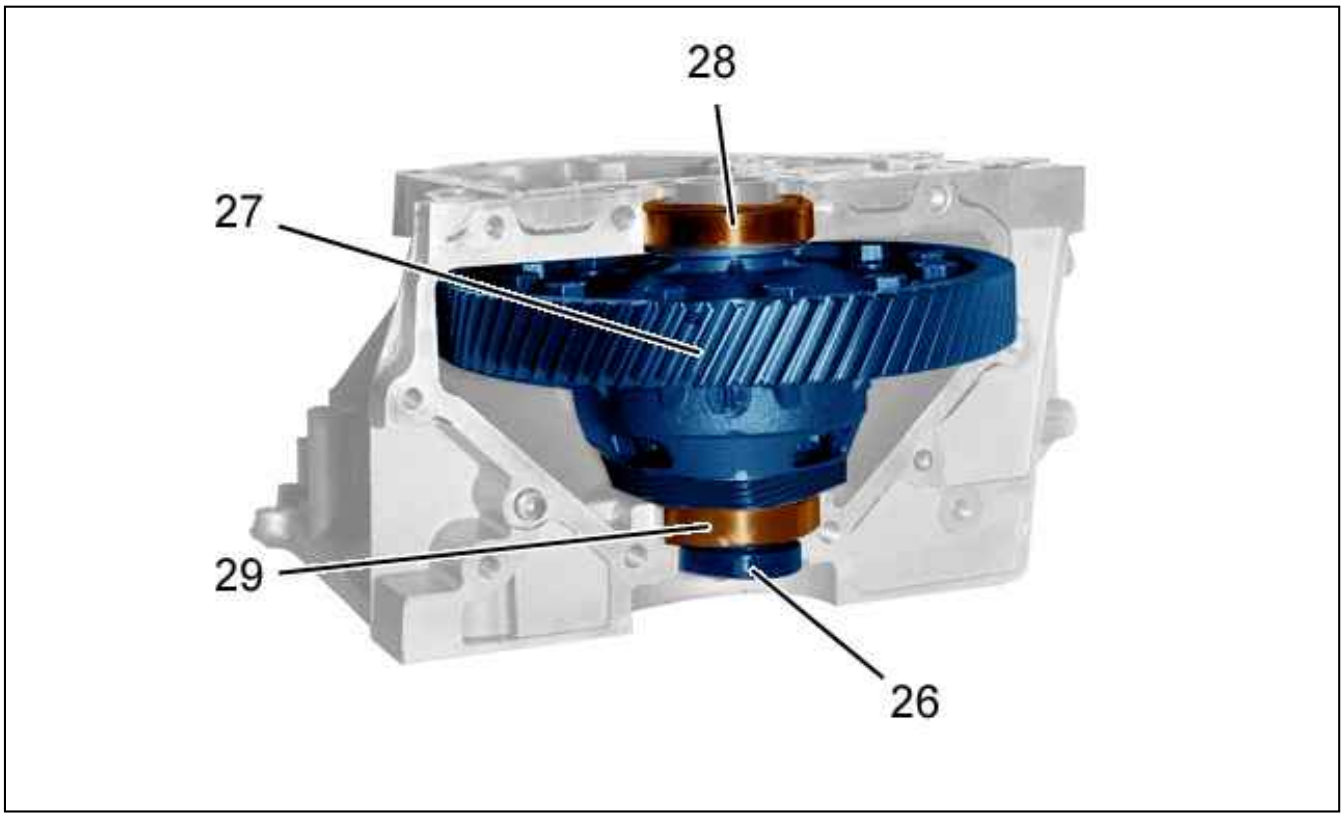

Figure : B2CM036D

Remove :

- The final drive seal (26) (speedometer drive end)
- Differential housing (27)
- The outer bearing rings (28) and (29)

REMOVING - REFITTING : MANUAL GEARBOX (TYPE MLGU)

ESSENTIAL : Observe the safety and cleanliness recommendations .

1. Tooling

Equipment :

- Transverse engine support bar (Type GILLET)
- Component lift with retaining clamps

2. Removing

2.1. All engines

Place the vehicle on a two-post ramp.
Disconnect the battery.

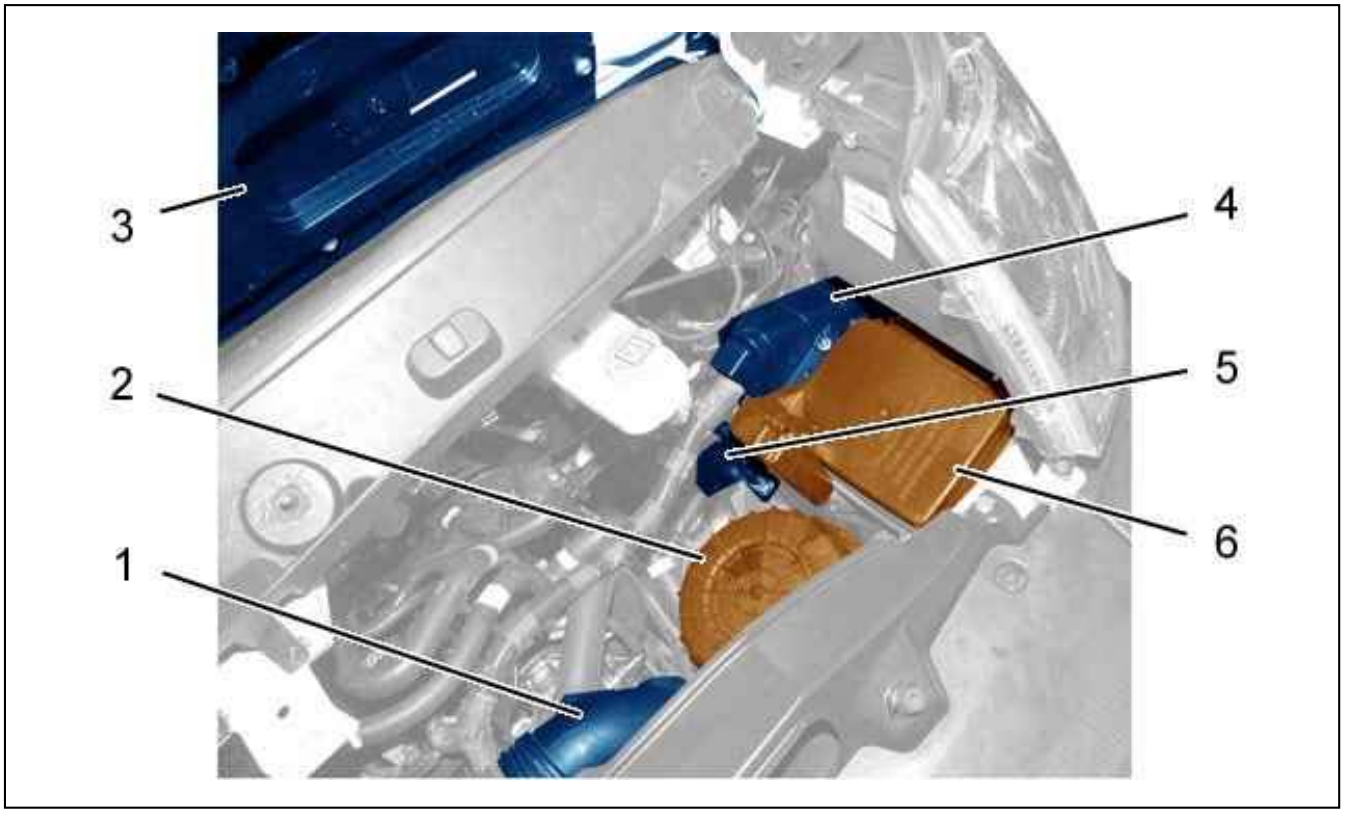

Figure : B1BPRX7D

Remove :

- The air inlet duct (1)
- The air filter assembly (2)
- The bonnet (3)

2.2. All engines except PUMA Euro 5

Remove : The ECU cover (4).

Disconnect the control unit .
Remove :

- The ECU support (5) and the ECU
- The engine relay and fuse (6) box cover

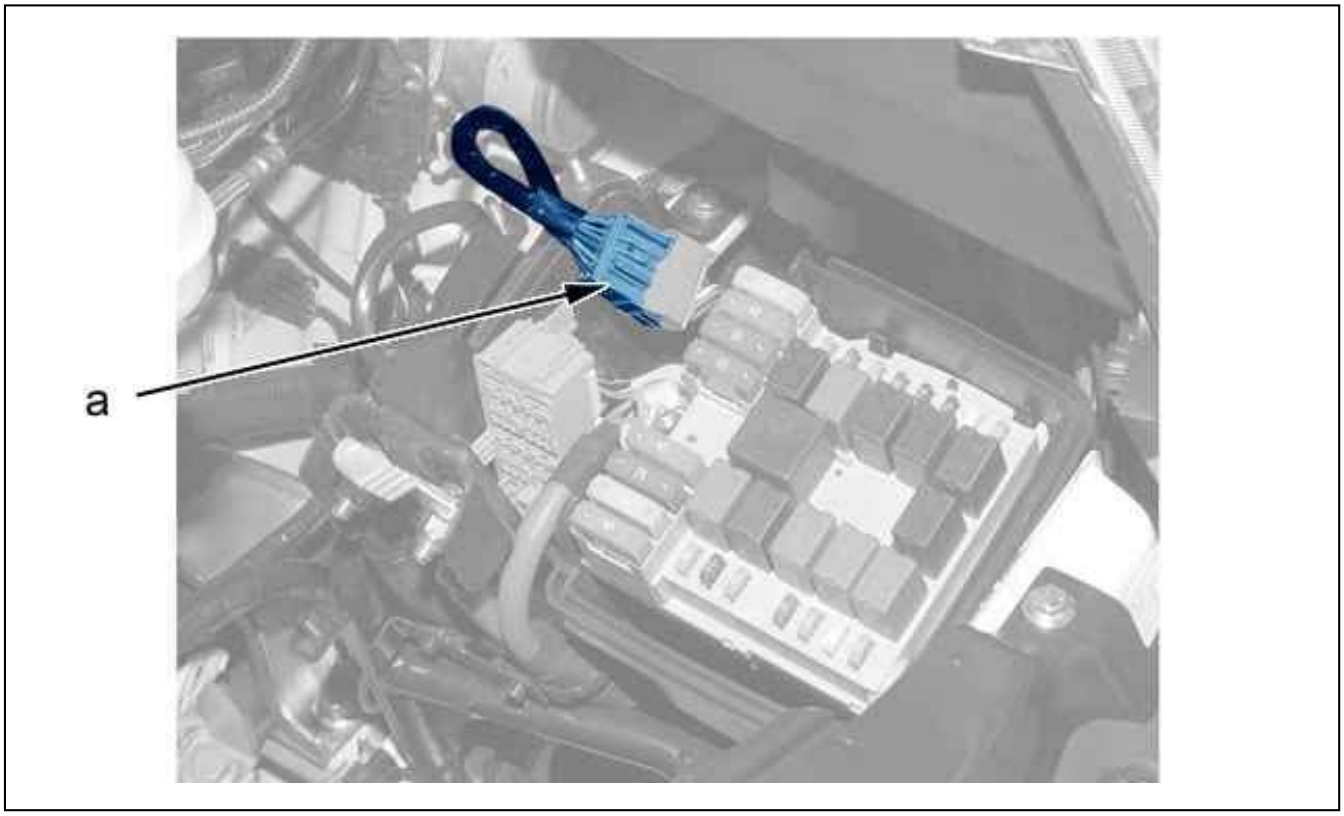

Figure : D4AP08RD

Disconnect the connector (as "a").
Move aside the ECU harness .

2.3. All engines

Drain the gearbox .
Remove :

- The drive shafts
- The turbocharger rigid lubrication return pipe (Except engine PUMA Euro 5)

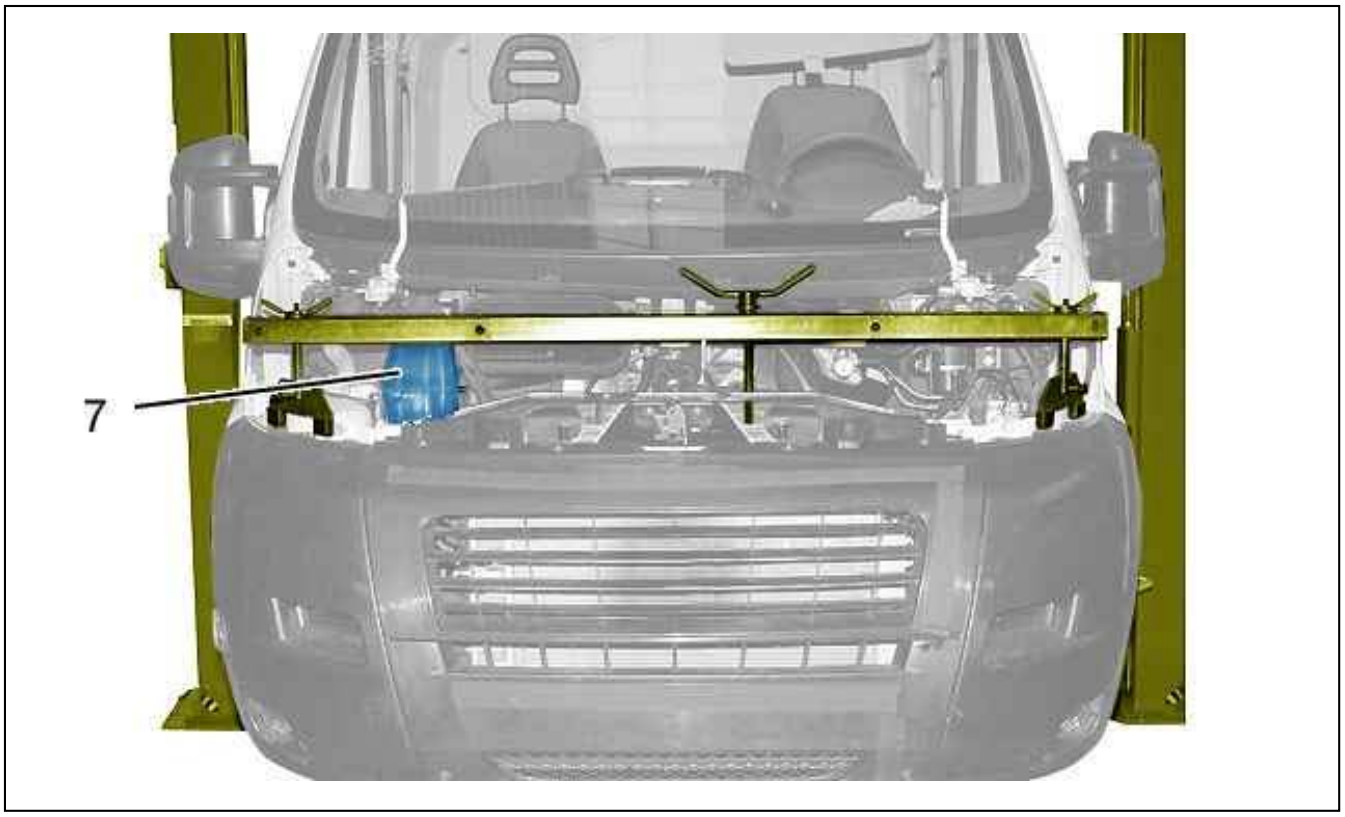

Figure : B2CG2EMD

Remove :

- The fixings of the assembly (7) (Power steering fluid reservoir and expansion bottle)
- The headlamps (See the corresponding operation)

Sling the engine by its lifting ring ; Using the transverse engine support bar.

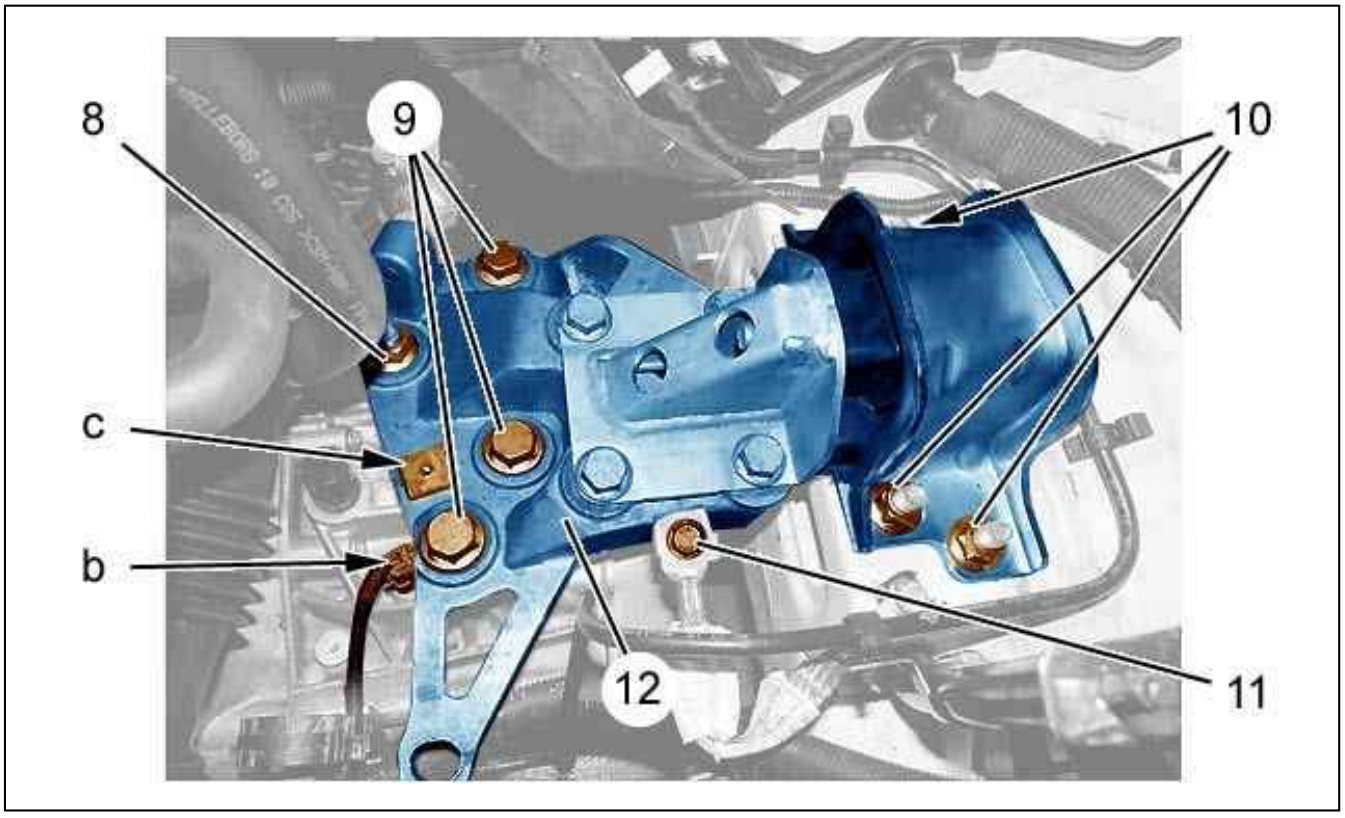

Figure : B2CG2EJD

Remove :

- The earth braid (11) bolt
- The securing plate from the hose (at "c") (according to assembly)

Unplug : The reverse switch (at "b").
Remove :

- The 3 bolts (9)
- The nut (8)
- The 3 nuts (10)
- The gearbox mounting assembly (12)

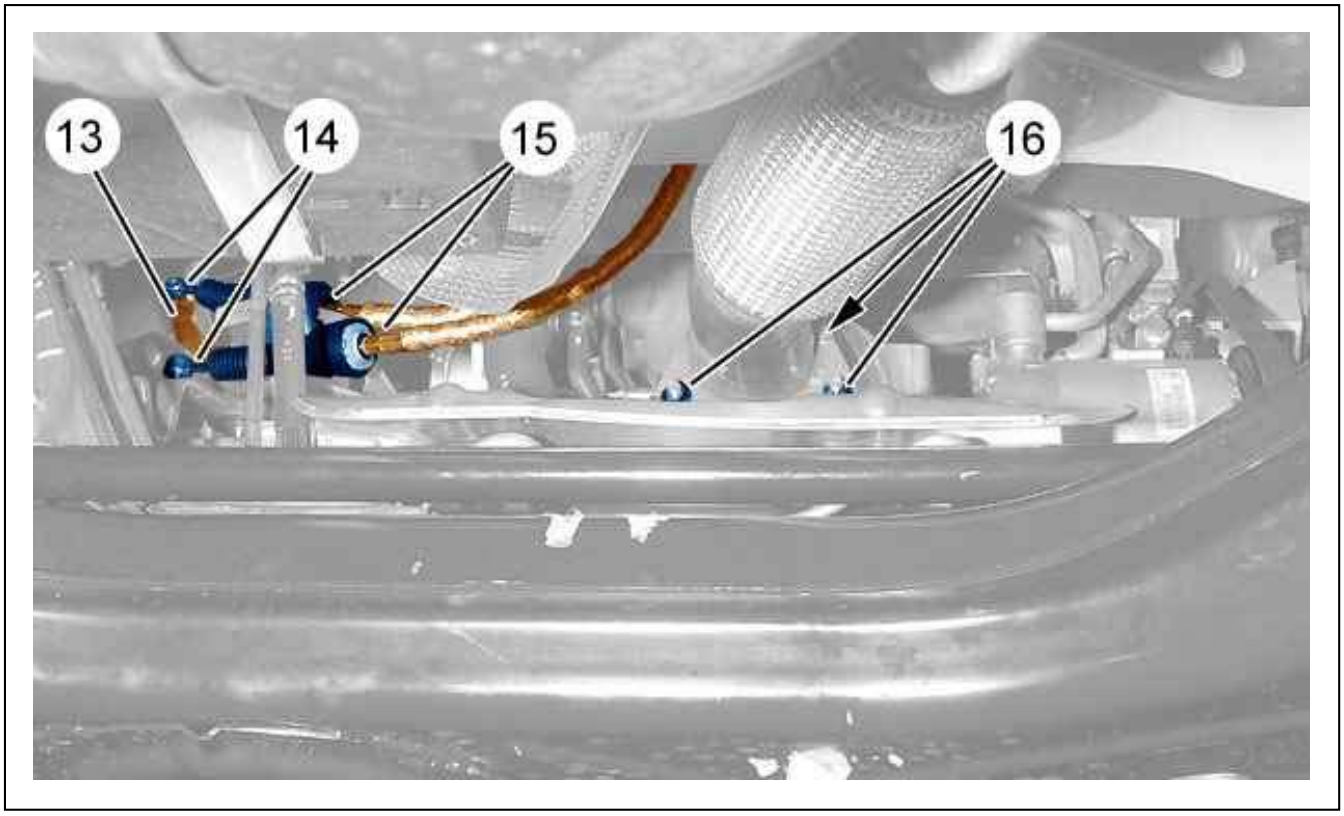

Figure : B2CP49JD

Remove :

- The ball-joints (14) (see the relevant operation)
- The gear selection shaft (13) (Except engine PUMA Euro 5)
- The 3 nuts (16)

Remove the exhaust line seal .
Release :

- The intermediate exhaust line
- The gear selection and engagement (15) cables

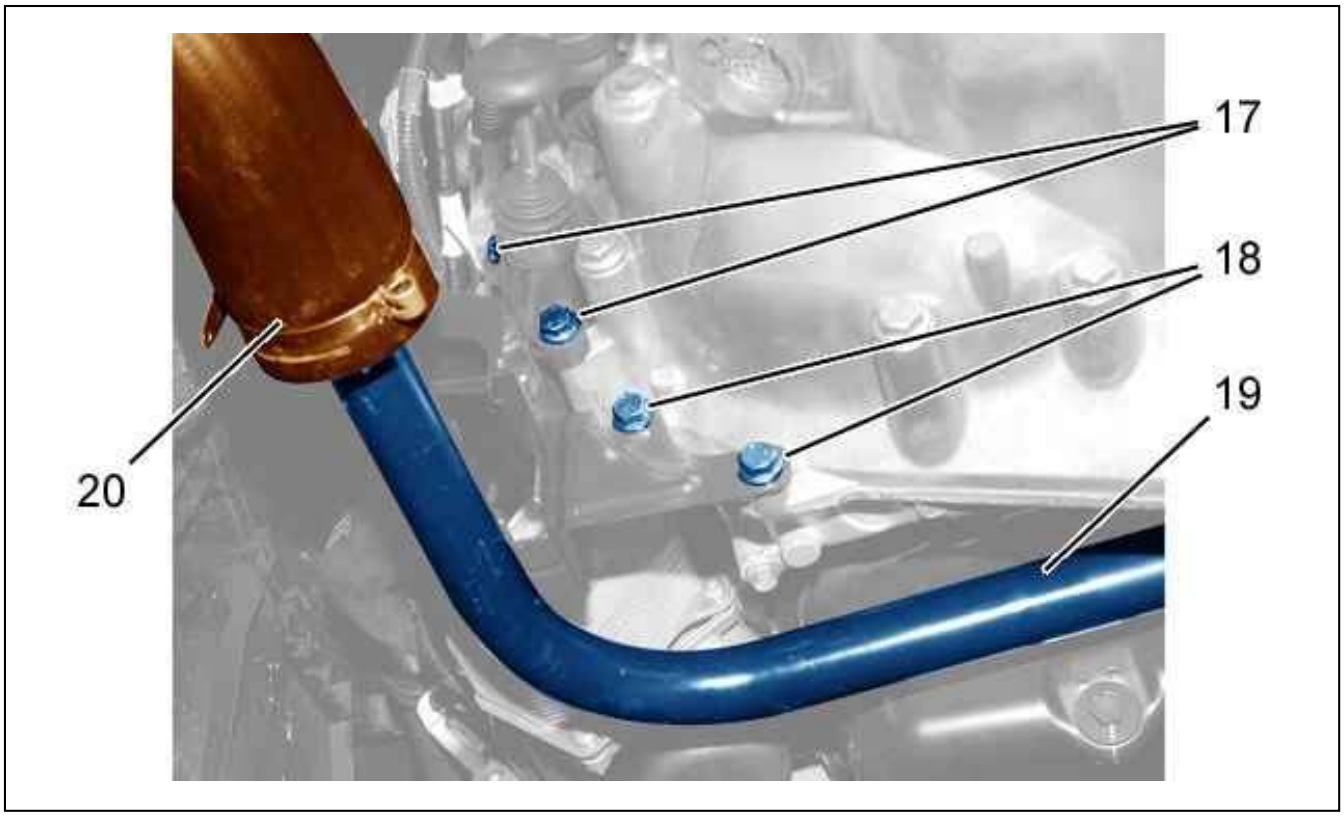

Figure : B2CP49KD

Remove :

- The 2 clutch control slave cylinder fixing bolts (17)
- The 2 pipe support bolts (18)
- The air duct (20)

ESSENTIAL : Do not press the clutch pedal with the control slave cylinder removed. Carefully detach the clutch slave cylinder in order to avoid rapid relaxation of the rod.

Release :

- The clutch control slave cylinder
- The hose bracket

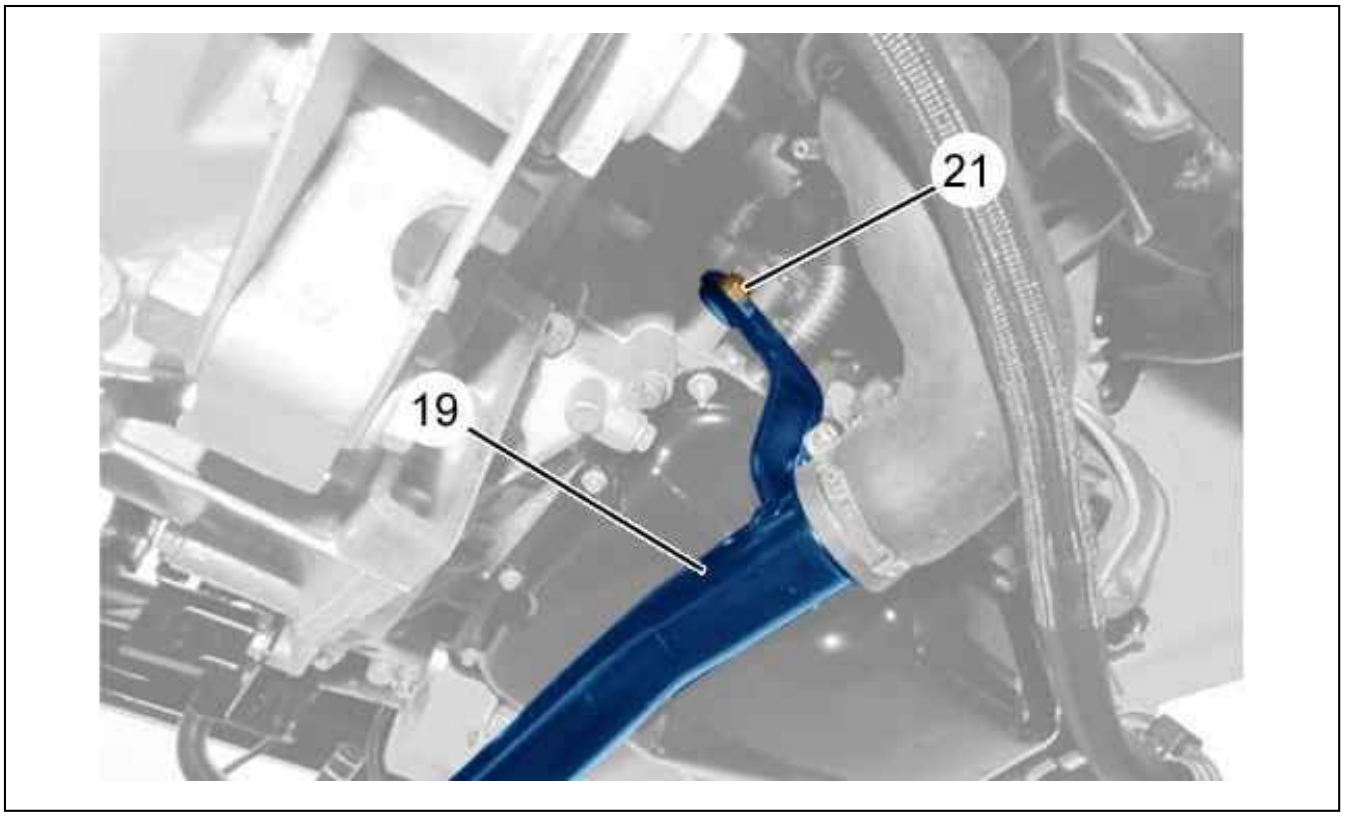

Figure : B2CG2EKD

Remove :

- The bolt (21) of the turbocharger air outlet pipe (19)
- The turbocharger air outlet pipe (19)

Disconnect, unclip and move aside the electrical harnesses which are connected to the gearbox.
Remove the securing bolts from the starter .
Move aside the starter without disconnecting it.

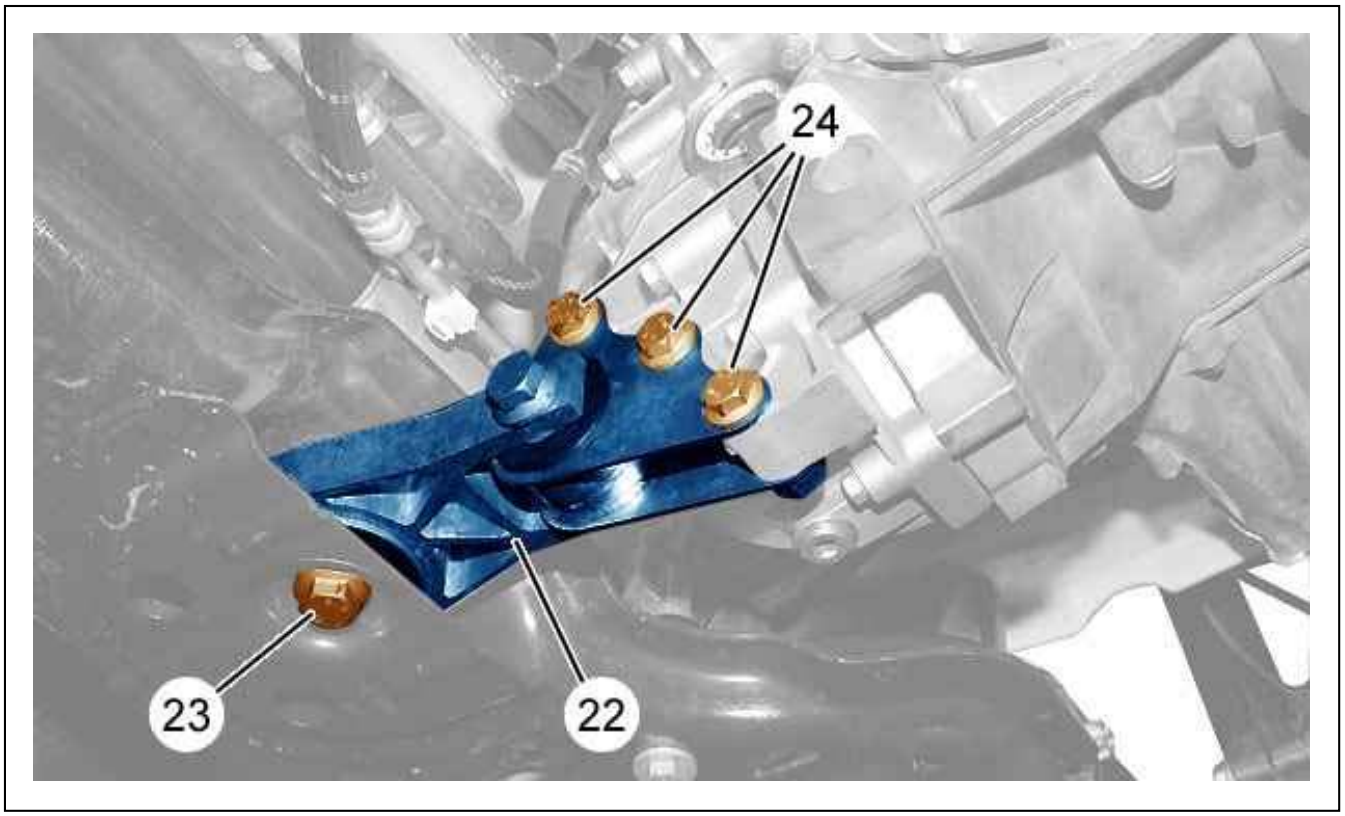

Figure : B2CG2ELD

Remove :
- The 3 bolts (24)
- The (23) bolt
- The reaction link (22)

Remove 9 of the 10 engine-gearbox coupling bolts .
Lower the engine-gearbox assembly to permit disengaging of the gearbox ; Using the transverse engine support bar.
Position the component lift under the gearbox .
Clamp the gearbox on the component lift .
Remove :
- The remaining engine-gearbox coupling bolt
- The gearbox

3. Refitting

CAUTION : Adhere to the tightening torques.

Tightening torques :
- Front suspension
- Gearbox
- Engine/gearbox mountings

Check :
- The absence of an oil leak at the stop guide and at the crankshaft seal
- The state of wear of the clutch

Rectify (if necessary).

N.B. : Clean the primary shaft and the stop guide by hand using a metal brush in order to eliminate all traces o oxidation.

ESSENTIAL : Clean the input shaft completely along its entire length, over its entire periphery and in the grooves.

Protect the interior of the clutch housing from splashes of grease.
Spray the recommended lubricant evenly onto the thrust guide and the primary shaft.
Grease the fingers of the clutch fork .

N.B. : For these operations, use the product MOLYKOTE SPRAY RAPIDE (Aerosol).

Remove the surplus grease on the top of the grooves and the end of the input shaft using a cloth.

CAUTION : An excess of grease will contaminate the clutch friction plate and cause noise in neutral, slipping o juddering of the clutch.

ESSENTIAL : If the clutch disc is reused, the disc hub must be free of traces of oxidation.

On refitting, the clutch stop must be on its guide and positioned by the clutch release fork.
Place the gear lever in neutral.
Refit :

- The gearbox ; Using the component lift
- The engine gearbox coupling bolts

Raise the engine-gearbox assembly ; Using the transverse engine support bar.
Move aside the component lift .
Refit :

- The gearbox mounting assembly (12)
- The 3 nuts (10)
- The 3 bolts (9)
- The nut (8)
- The starter motor
- The fixing screws of the starter
- The electrical harnesses connected to the gearbox
- The clutch control slave cylinder
- The 2 clutch control slave cylinder fixing bolts (17)
- The turbocharger air outlet pipe (19)
- The hose bracket
- The 2 pipe support bolts (18)
- The bolt (21) of the turbocharger air outlet pipe (19)
- The air duct (20)
- The reaction link (22)
- The bolt (23)
- The 3 bolts (24)
- The exhaust seal
- The intermediate exhaust line
- The 3 nuts (16)
- The gear selection shaft (13) (Except engine PUMA Euro 5)
- The gear selection and engagement (15) cables
- The ball-joints (14) (see the relevant operation)
- The turbocharger rigid lubrication return pipe (Except engine PUMA Euro 5)
- The drive shafts

Return the vehicle to its wheels.
Remove the transverse engine support bar.
Refit :

- The headlamps (See the corresponding operation)
- The fixings of the assembly (7) (Power steering fluid reservoir and expansion bottle)

Connect : The reverse switch (as "b").
Refit :

- The securing plate from the hose (as "c")
- The earth braid (11) bolt

Fill gearbox with oil and ensure correct level .
Replace the ECU harness .
Connect the connector "a" to the engine fuse box .
Refit :

- The engine relay and fuse (6) box cover
- The ECU support (5) and the ECU

Re-connect the control unit .
Refit :

- The ECU cover (4)
- The air filter assembly (2)
- The air inlet duct (1)
- The bonnet (3)

CAUTION : Perform the operations to be carried out following reconnection of the battery.

Reconnect the battery.
Initialise the various ECUs.

REMOVING - REFITTING : DRIVE SHAFT SEALS

ESSENTIAL : Observe the safety and cleanliness recommendations.

Chock and lift the vehicle on a 2 column lift.

1. Recommended tools

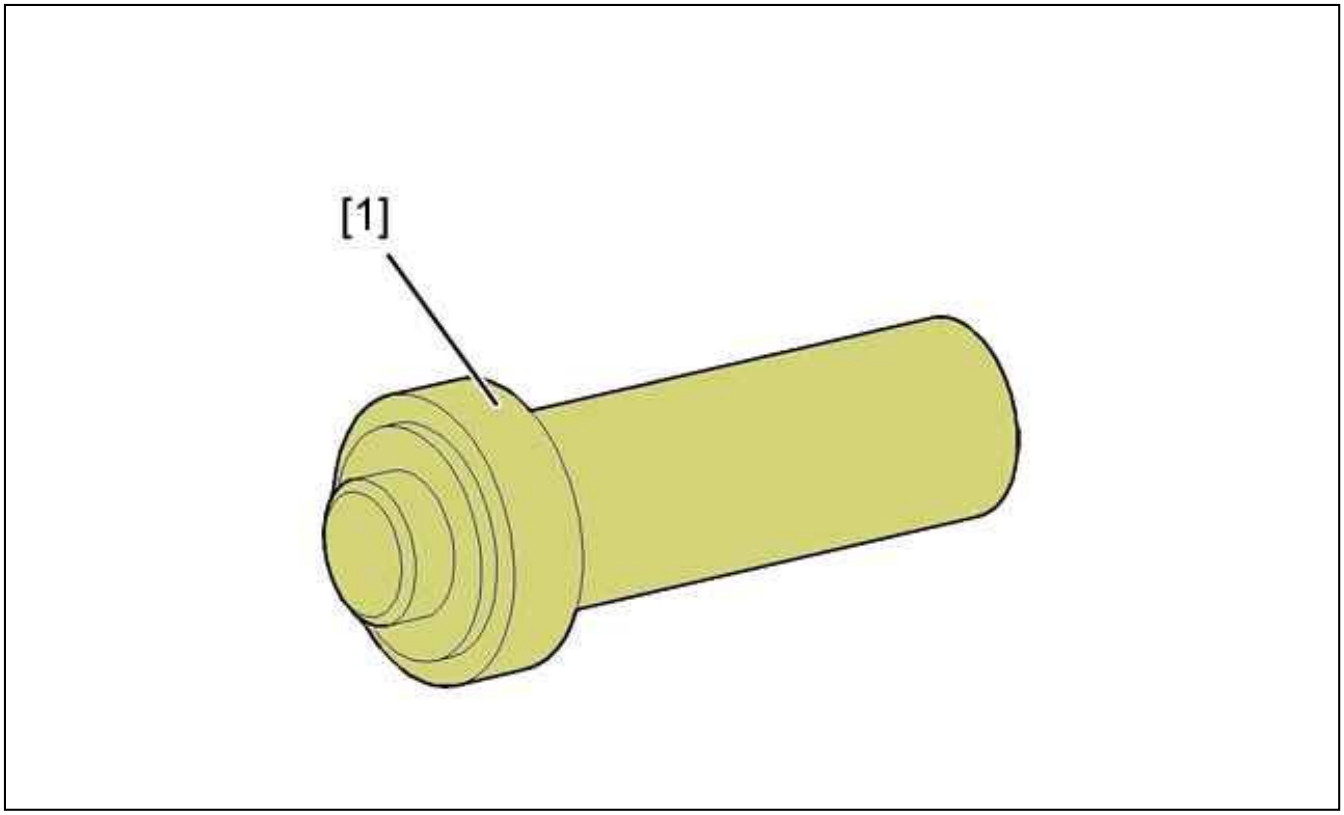

Figure : E5AP33ZD

[1]Left-hand differential seal fitting drift (-).0332.B.

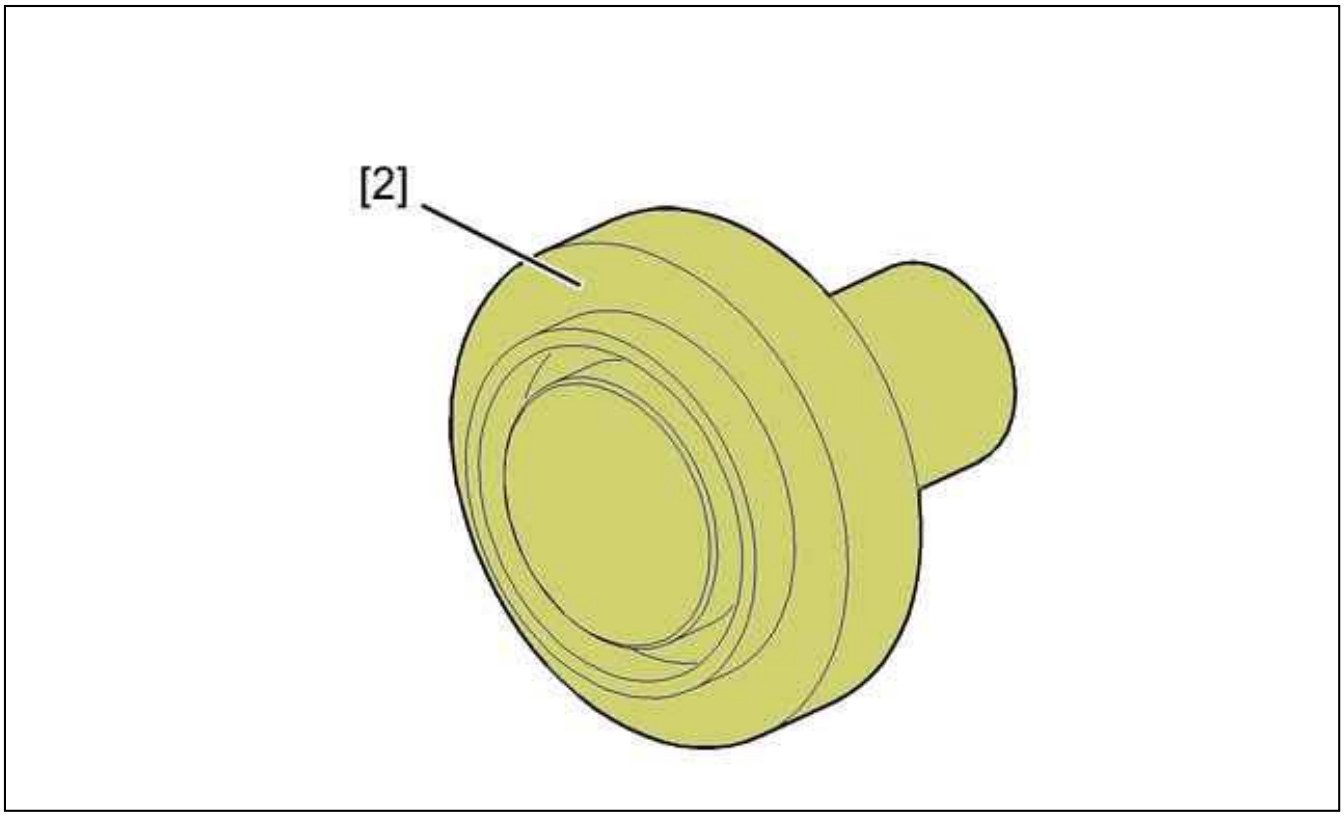

Figure : E5AP340D

[2]Right-hand differential seal fitting drift (-).0332.A.

2. Removing

Drain the gearbox (see the relevant operation).
Remove the drive shafts (see the relevant operation).

2.1. On the left-hand side

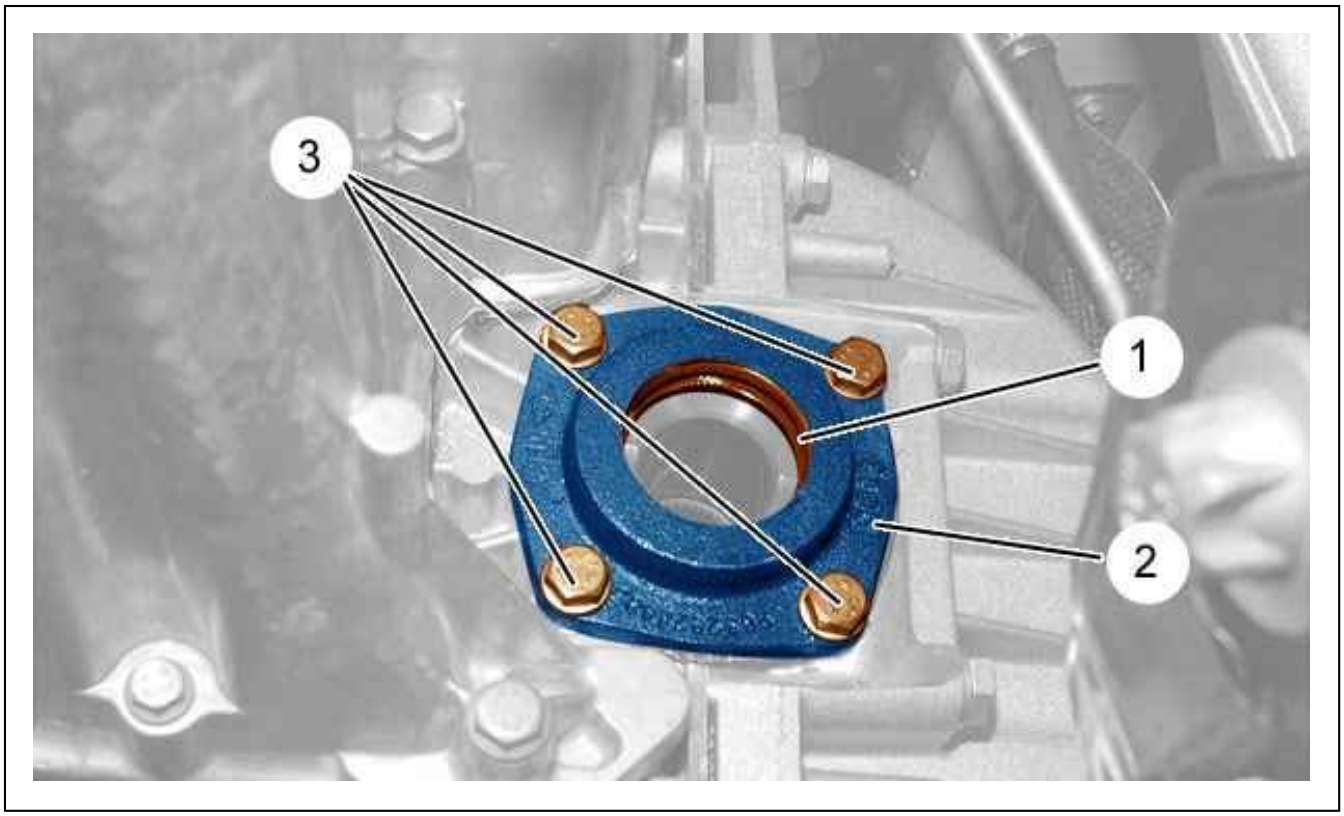

Figure : B2CP49VD

Remove :

- The 4 bolts (3)
- The differential bearing lock plate (2)
- The left-hand driveshaft seal (1)

2.2. On the right-hand side

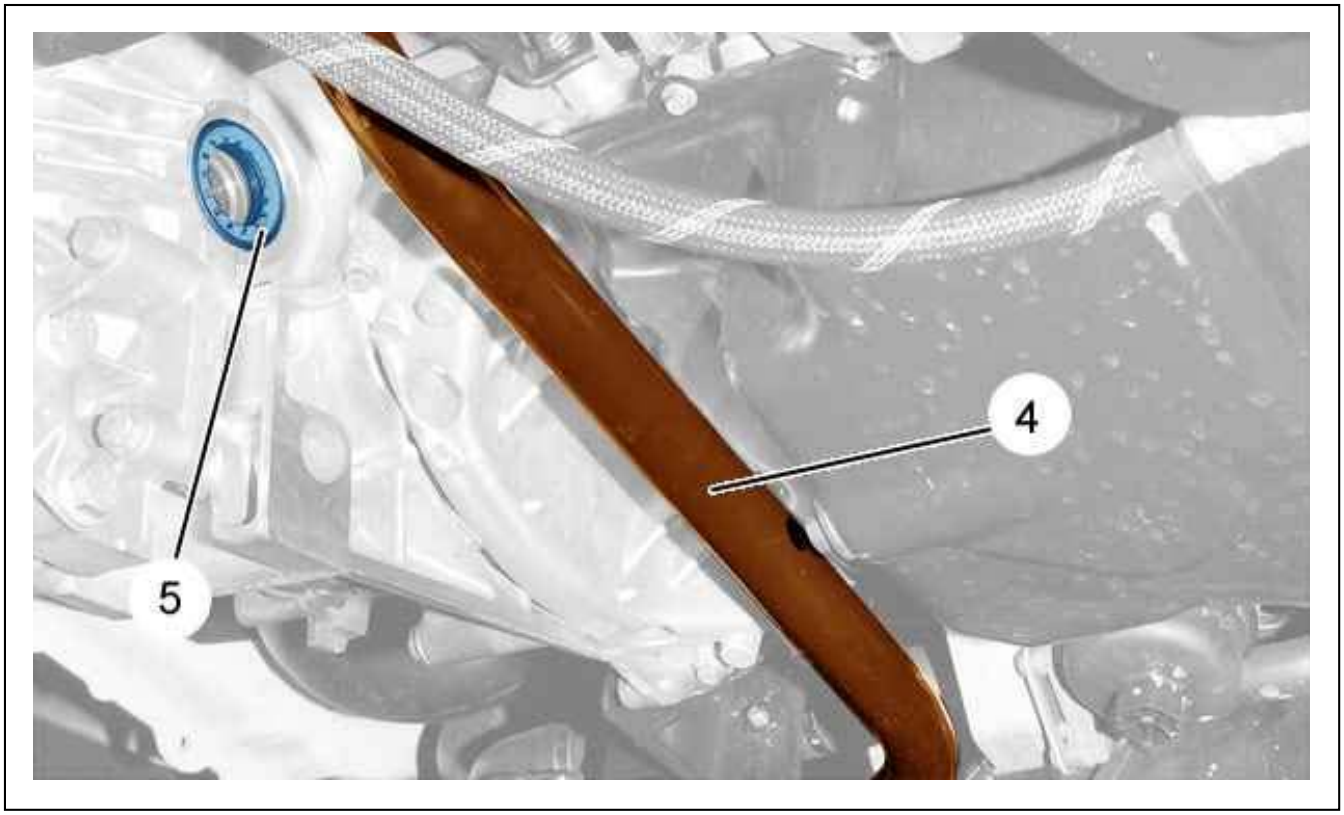

Figure : B2CP49WD

Remove :

- The right-hand driveshaft seal (5)
- The turbocharger air outlet rigid pipe (4)

N.B. : Push the right-hand seal towards the inside of the differential housing, using a pin punch, while supporting the opposite side of the seal using a screwdriver.

3. Refitting

CAUTION : Clean the gasket faces with an approved descaling product . Do not use abrasives or sharp tools on the joint faces. The seal faces should not show any traces of impacts or scratches.

3.1. On the left-hand side

Oil the LH driveshaft seal.



Figure : B2CP49XD

Refit the driveshaft seal (1) in the differential bearing lock plate (2) ; Using tool [1].
Coat the interval between the lips of the driveshaft seal with grease.
Apply a bead of type "E10" sealant to the joint face of the differential bearing lock plate (2).
Refit :

- The differential bearing lock plate (2)
- The bolts (3) ; Tighten to 3 ± 0,3 daN.m

3.2. On the right-hand side

Oil the right-hand drive shaft seal.

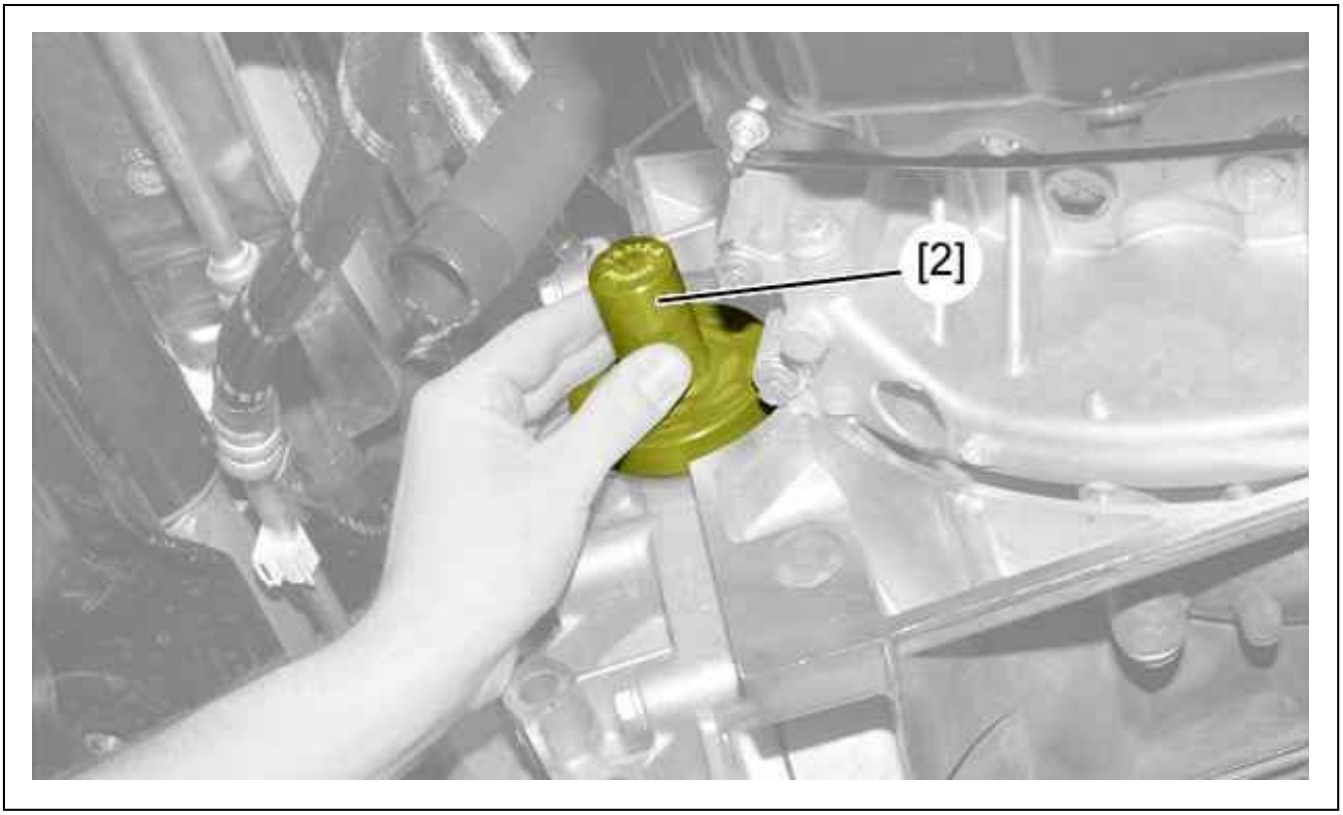

Figure : B2CP49YD

Refit the right-hand driveshaft seal ; Using tool [2].
Coat the interval between the lips of the driveshaft seal with grease.
Refit the turbocharger air outlet rigid pipe (4).

3.3. On both sides

Refit the drive shafts(see the relevant operation).
Fill gearbox with oil and ensure correct level(see the relevant operation).

DRAIN - REFILL : MANUAL GEARBOX (TYPE MLGU5/MLGU6)

ESSENTIAL : Observe the safety and cleanliness recommendations .

1. Tooling

tool	Reference	Designation
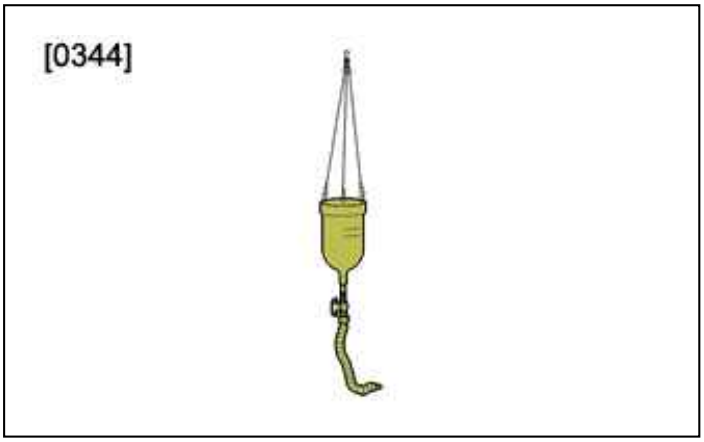 Figure : E5AI00BT	[0344]	oil filling cylinder

N.B. : The gearbox is lubricated "for life" and does not have a top-up cap .

ESSENTIAL : It is necessary to drain the gearbox and put back the exact quantity of oil, in the event of an external leak or a repair.

2. Presentation

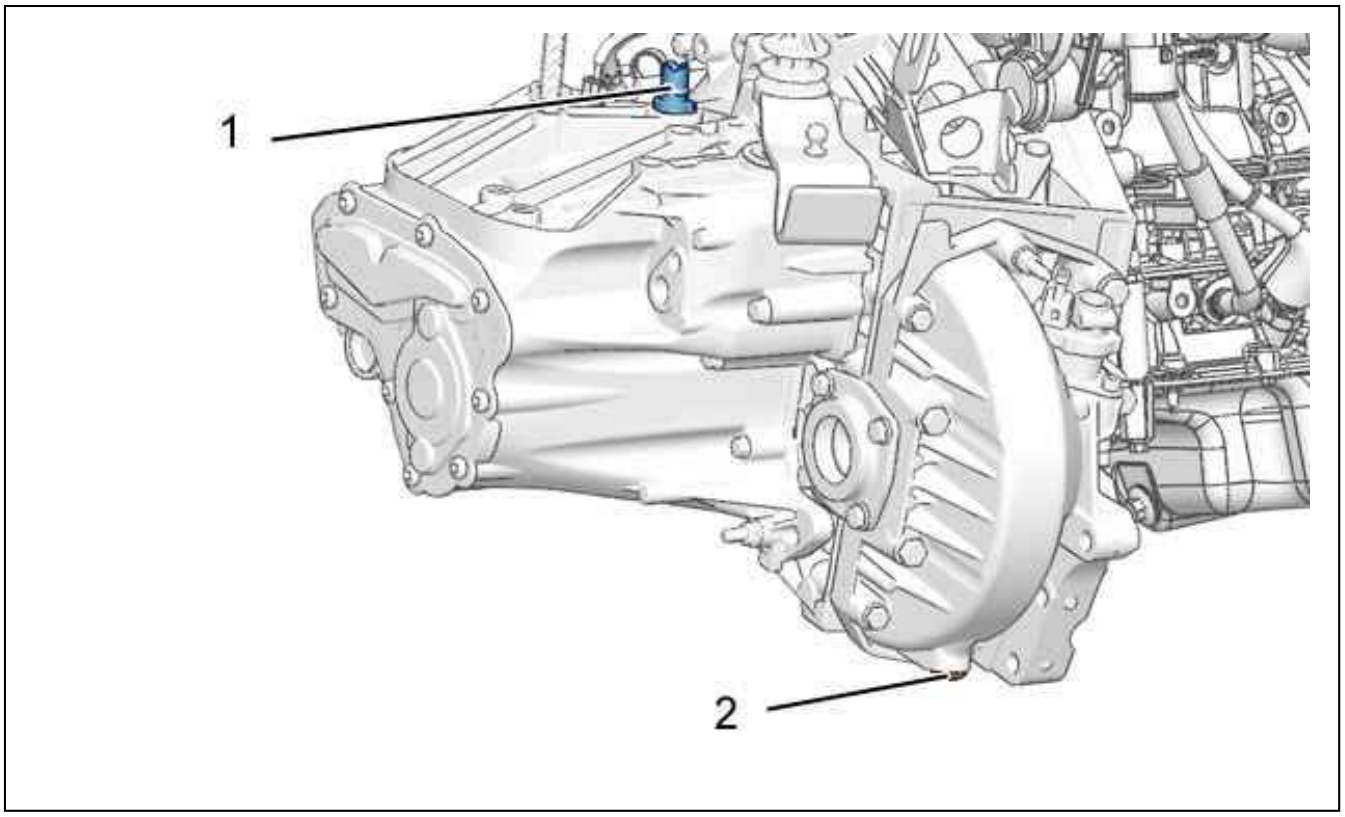

Figure : B2CP495D

(1) Filling and venting hole.
(2) drain plug.

N.B. : Fit a new seal after draining.

3. Oil quality

Recommended oils :

- ESSO 75w80 EZL 848
- TOTAL 75w80 H 6965

4. Oil quantity

N.B. : Refill the gearbox via the air vent hole (1) Using tool [0344].

4.1. MLGU5C manual gearbox

Quantity of oil to be replaced :

- After draining : 2,4 litres
- After overhaul : 2,7 litres

4.2. MLGU6C manual gearbox

Quantity of oil to be replaced :

- After draining : 2,9 litres
- After overhaul : 3,2 litres

RE-ASSEMBLING : MLGU6 MANUAL GEARBOX

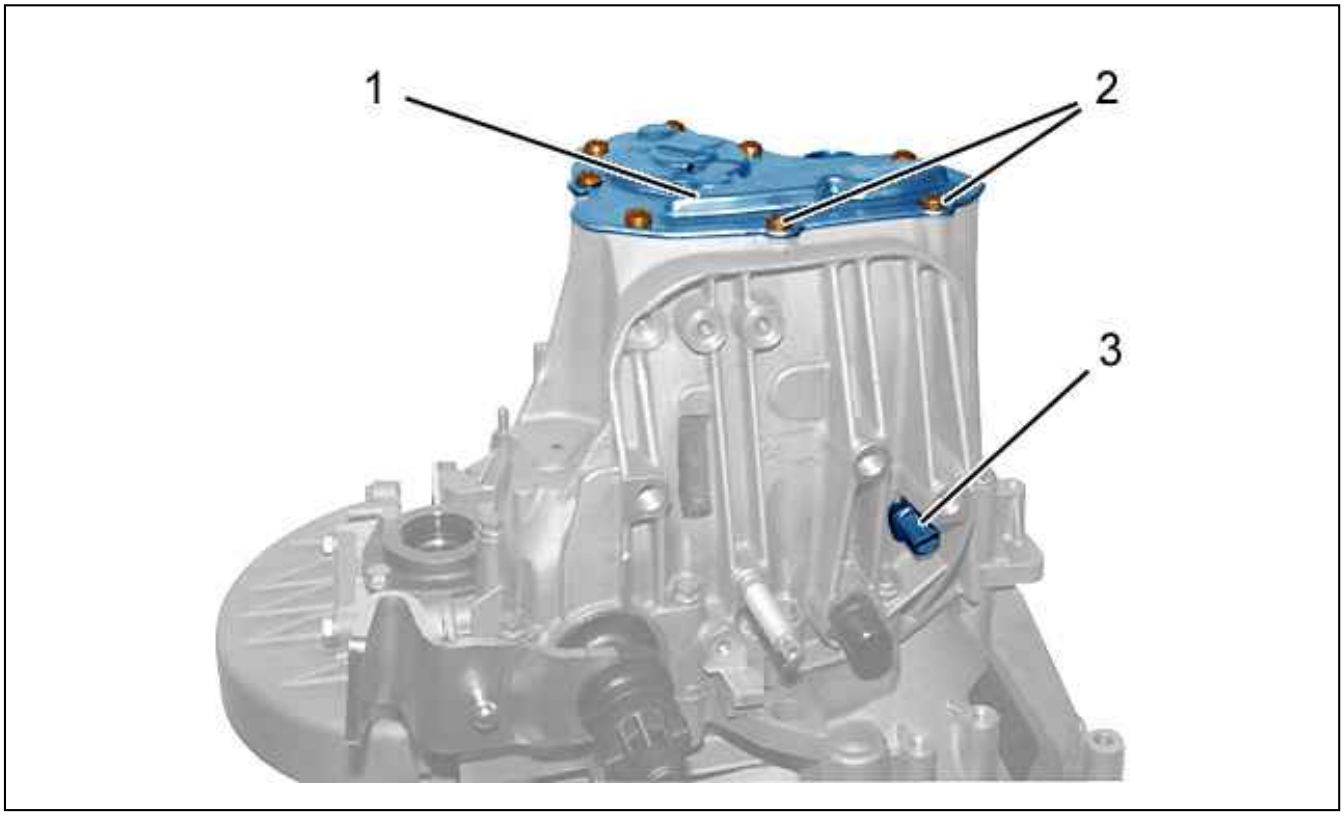

Figure : B2CM052D

Coat the joint face with a thin, even layer of sealing paste "E10".
Refit :

- The gearbox casing (1)
- The fixing screws of the cover (2) (manual gearbox) ; Tighten to 2 daN.m
- The reverse switch (3)

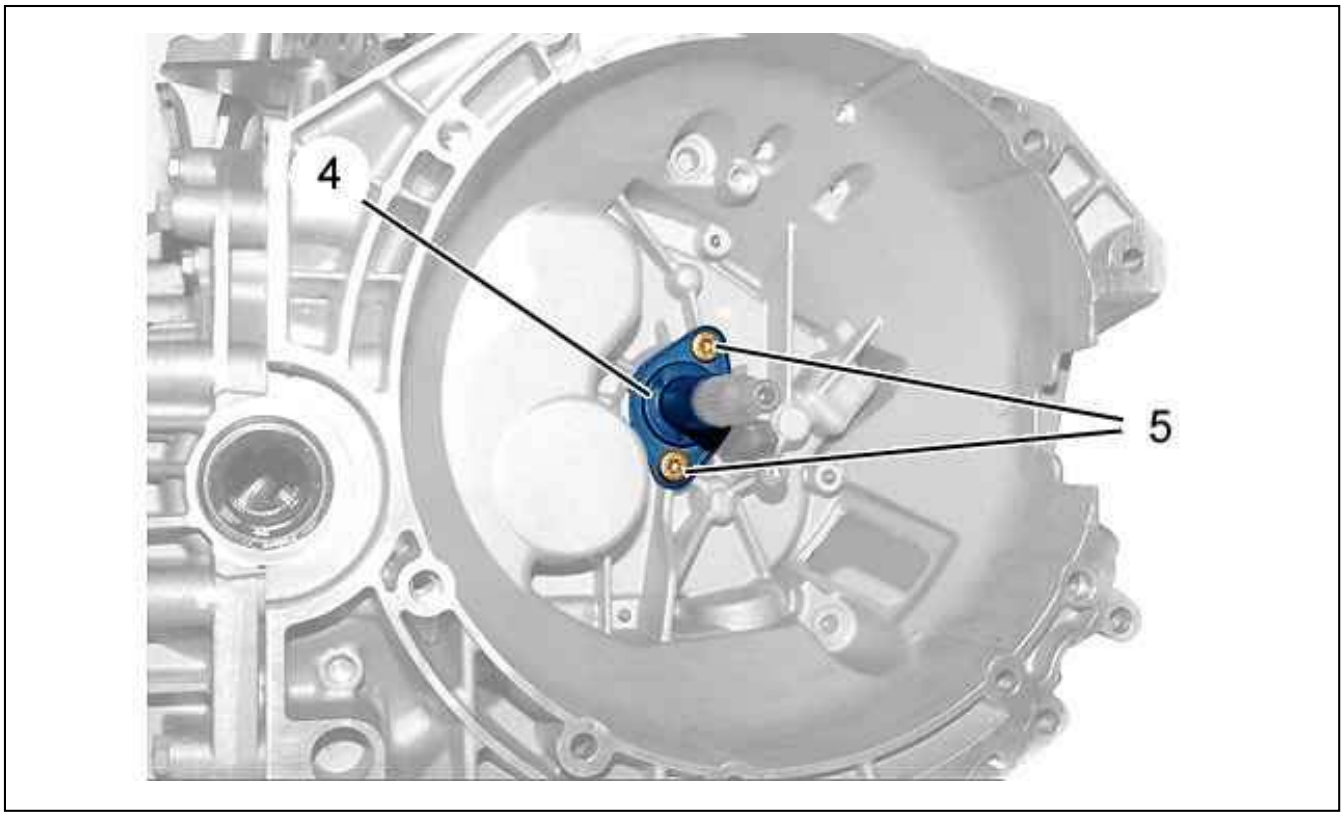

Figure : B2CM053D

Refit :

- The stop guide (4)
- The bolts (5) ; Tighten to 2,5 daN.m

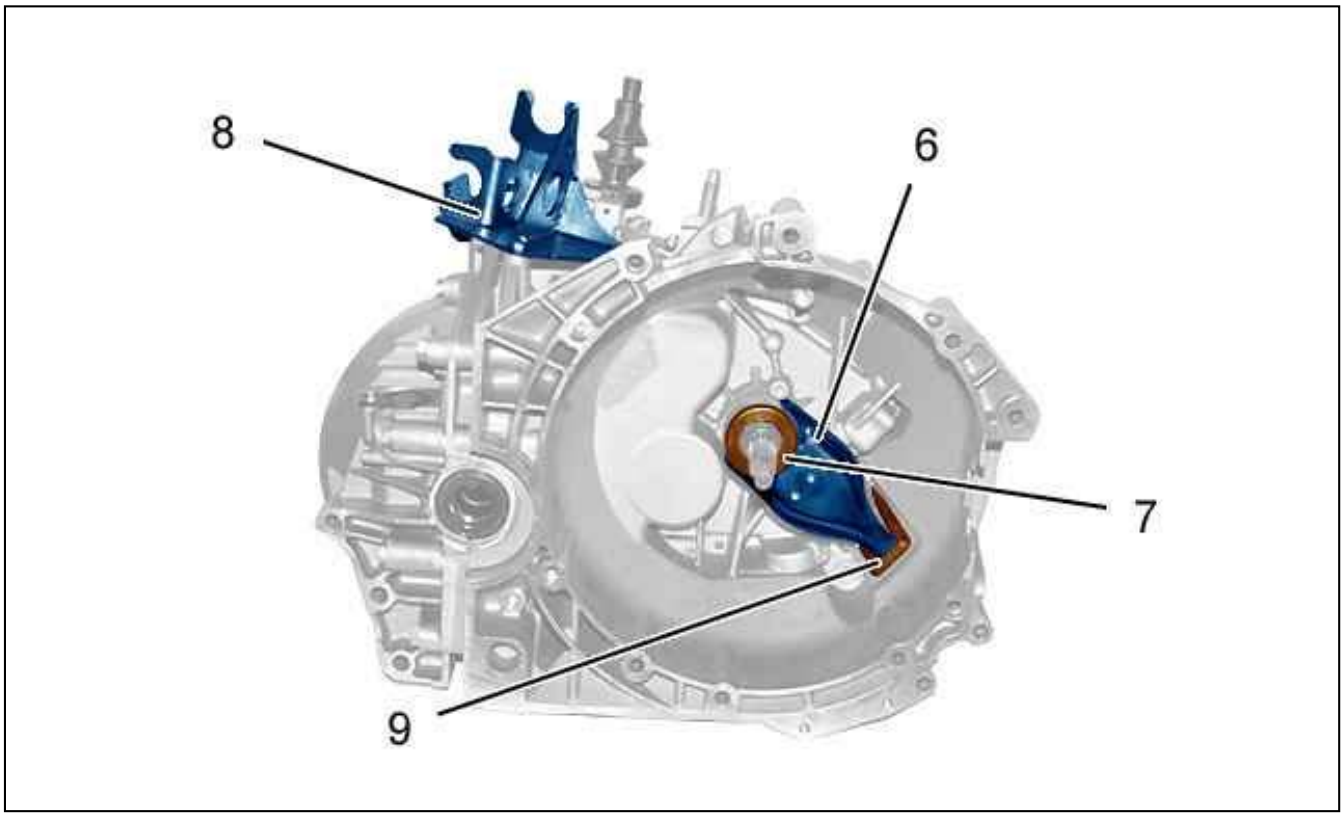

Figure : B2CM054D

CAUTION : Excess grease on the splines of the gearbox primary shaft can cause the destruction of the clutch.

Lightly coat the following components with Kluberpaste 46 MR 401 grease :

- The fork fingers and ball joint
- The gearbox input shaft splines
- The clutch bearing guide

Refit :

- The fork (6)
- The clutch thrust bearing (7)
- The stop plate (8)
- The protector (9)

STRIPPING : GEARBOX

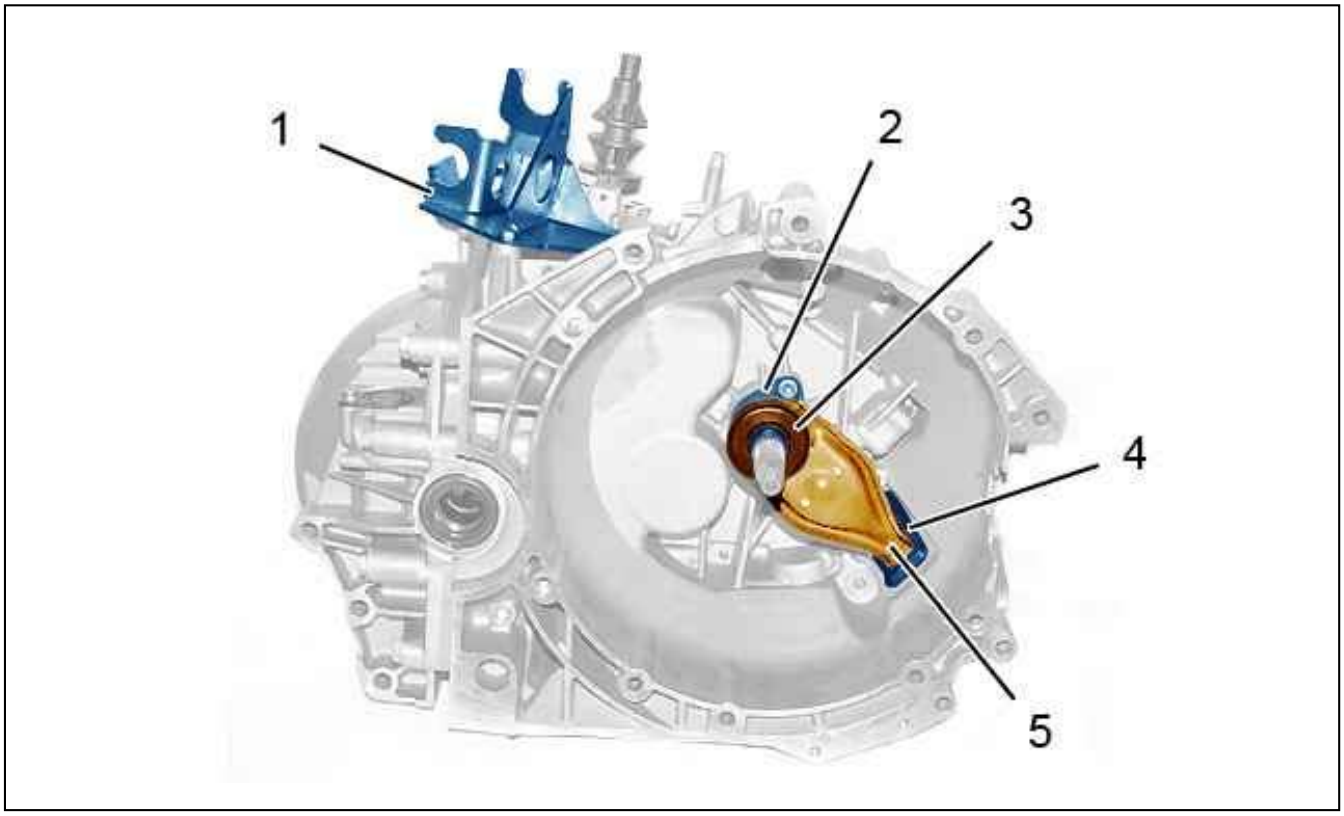

Figure : B2CM09QD

Remove :

- The clutch fork (5)
- The protector (4)
- Declutch bearing (3)
- The stop guide (2)
- The stop plate (1)

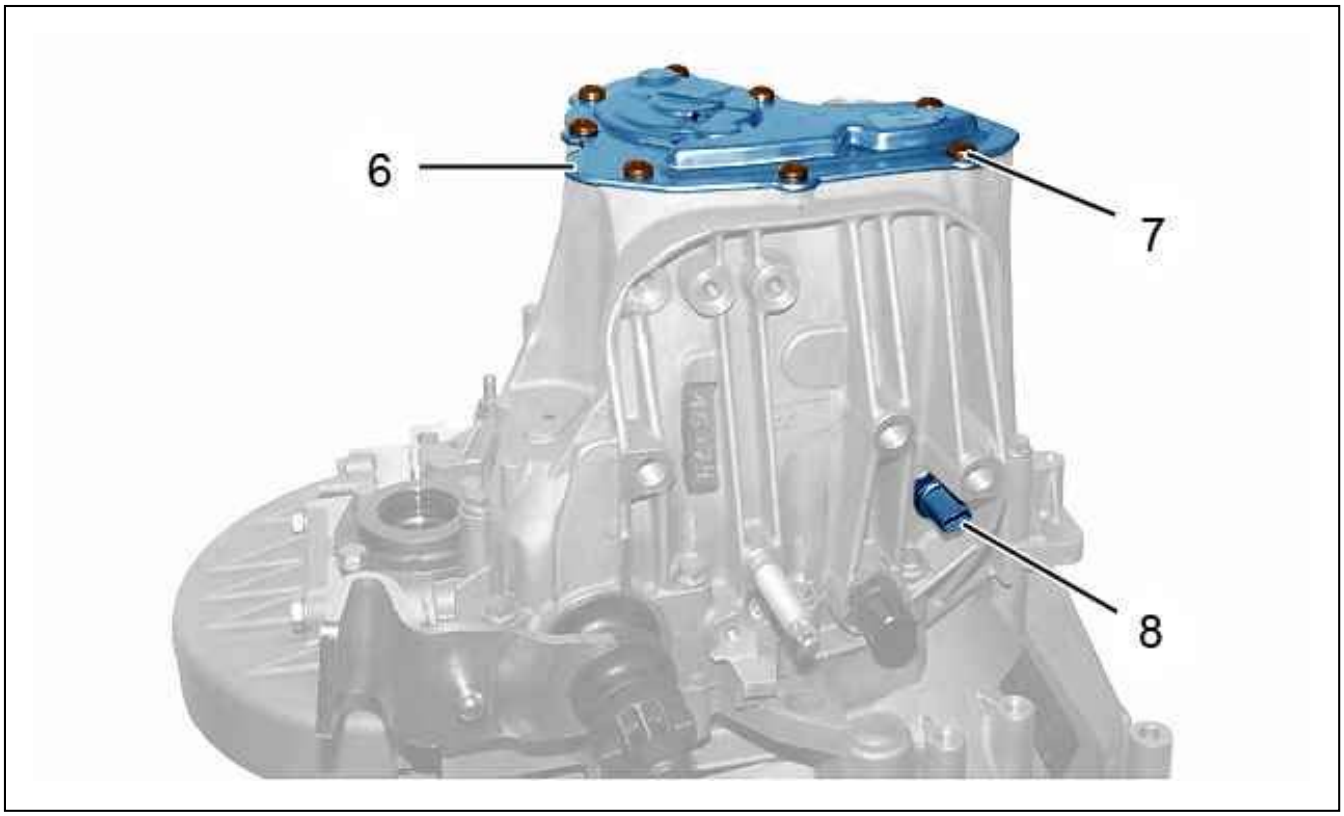

Figure : B2CM09RD

Remove :

- The securing bolts (7) (Gearbox cover)
- The gearbox casing (6)
- The reverse switch (8)

REMOVING - REFITTING : ANCILLARY DRIVE BELT

ESSENTIAL : Observe the safety and cleanliness recommendations .

1. Tooling

tool	Reference	Designation
 Figure : E5AB153T	[0198-P]	flywheel stop
 Figure : E5AB154T	[0198-E]	Centraliser x2
	[0198-M1]	Crankshaft drive tool
	[0198-M2]	Crankshaft drive tool bolt

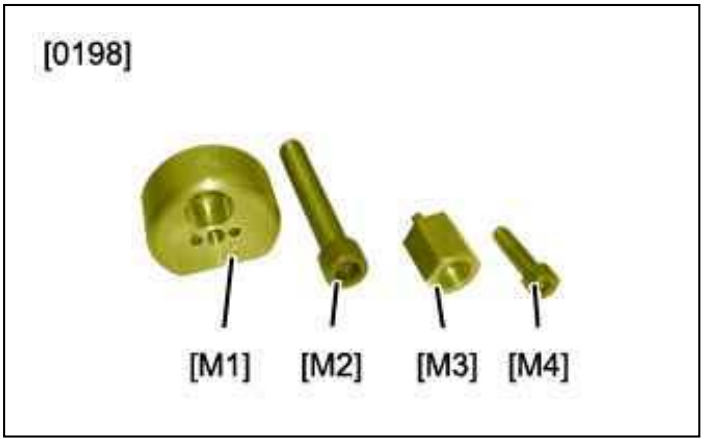 Figure : E5AB0LTT	[0198-M3]	Crankshaft driver
	[0198-M4]	Crankshaft drive tool bolt
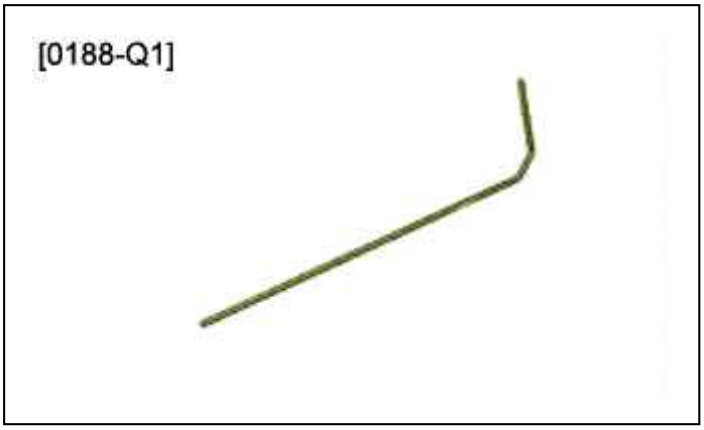 Figure : E5AB05JT	[0188-Q1]	Dynamic roller tensioner pins
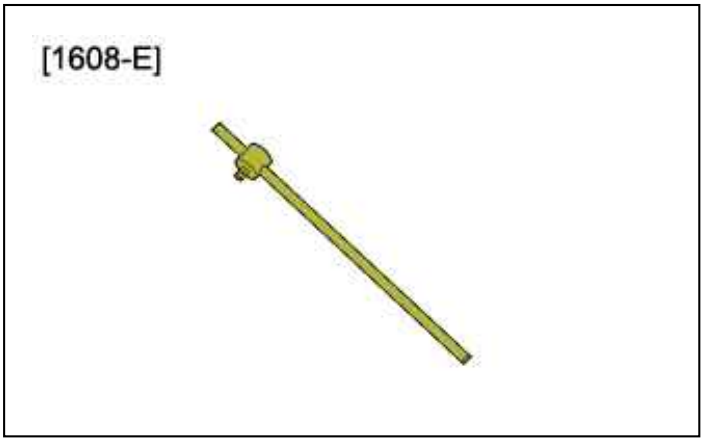 Figure : E5AB0C9T	[1608-E]	T piece extension

2. Removing

2.1. Common operations

CAUTION : Replace the torsional vibration damper double pulley for a distance travelled greater than or equal to 160000 km, when the accessories drive belt is replaced.

Place the vehicle on a 2-post lift.
Disconnect the battery negative terminal.
Remove :

- The protection plates under the engine
- The front right wheel

CAUTION : Prior to removal, and before any subsequent refitting of the ancillary drive belt that has been removed, it is compulsory for the engine to be at ambient temperature (Below 30 °C). In all other cases, replace the ancillary drive belt.

N.B. : Removing it with the engine hot causes irreversible and invisible damage to the ancillary drive belt.

CAUTION : If replacing it, cut and remove the ancillary drive belt.

CAUTION : Check that the tool [0198-P] is correctly positioned between two teeth of the flywheel; or turn the crankshaft to correctly position the tool.

Move aside and secure : The starter motor .

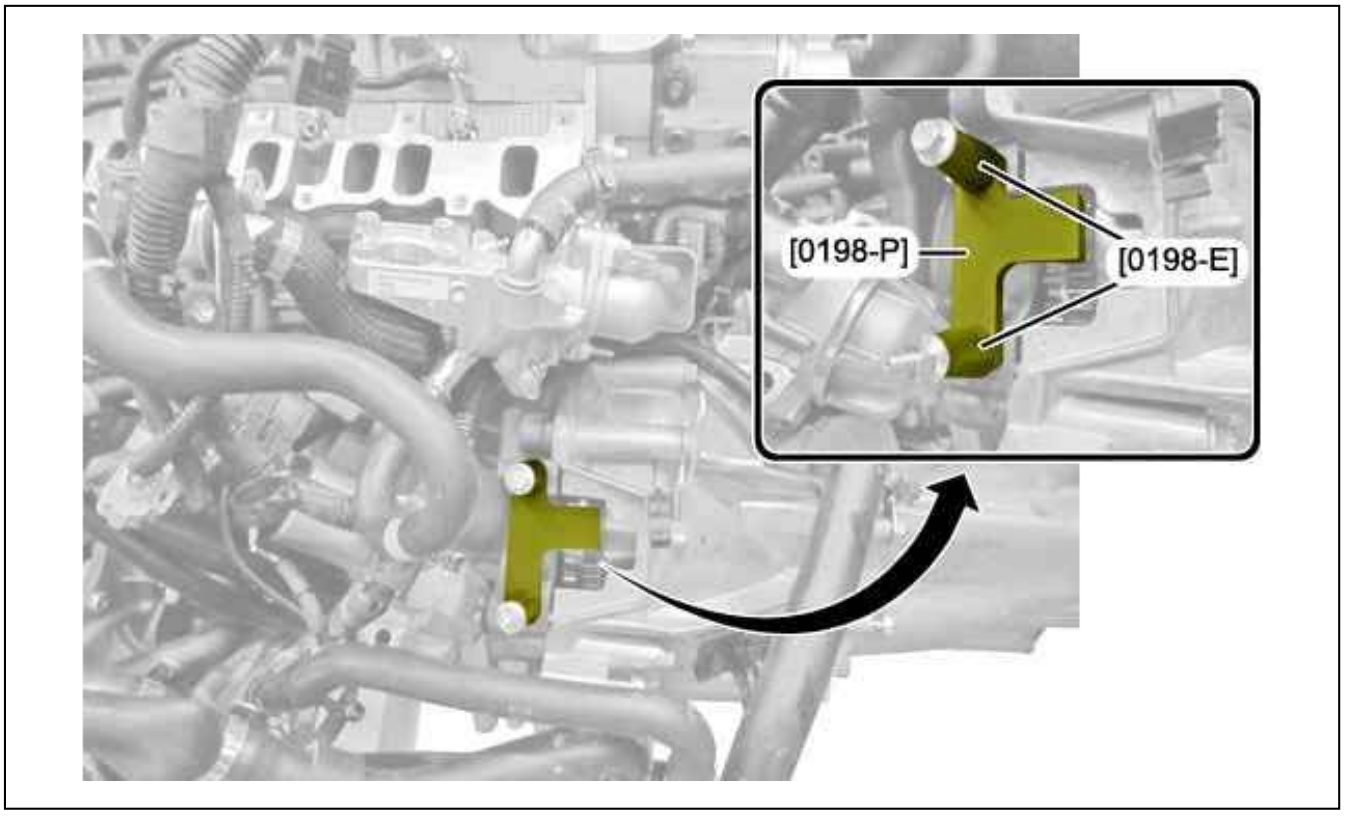

Figure : B1BG2YHD

Position the tools [0198-P], [0198-E].
Secure the assembly using the starter motor bolts.

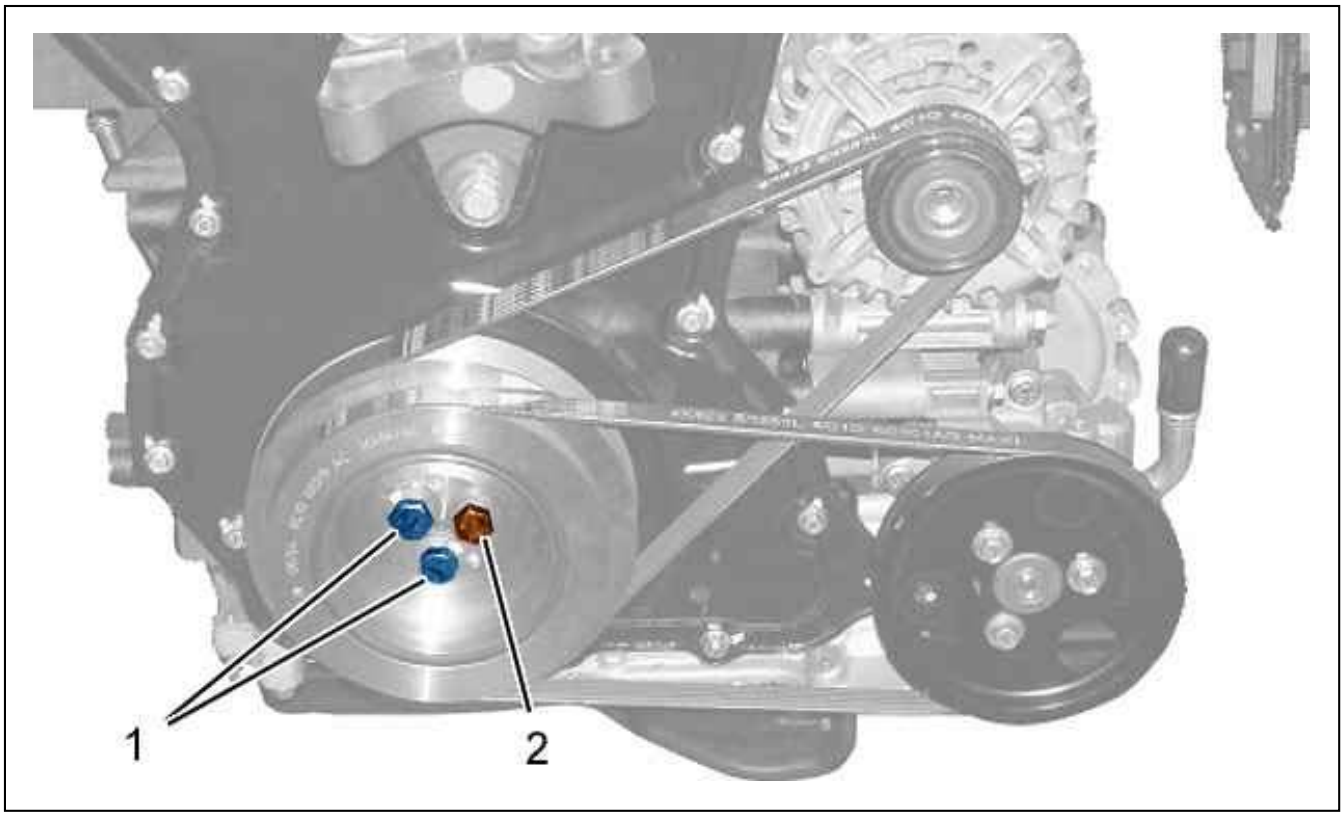

Figure : B1BPSHAD

Remove the accessories drive pulley fixing bolts (1).
Slacken the fixing bolt (2) of the ancillary drive pulley by 2 cm.

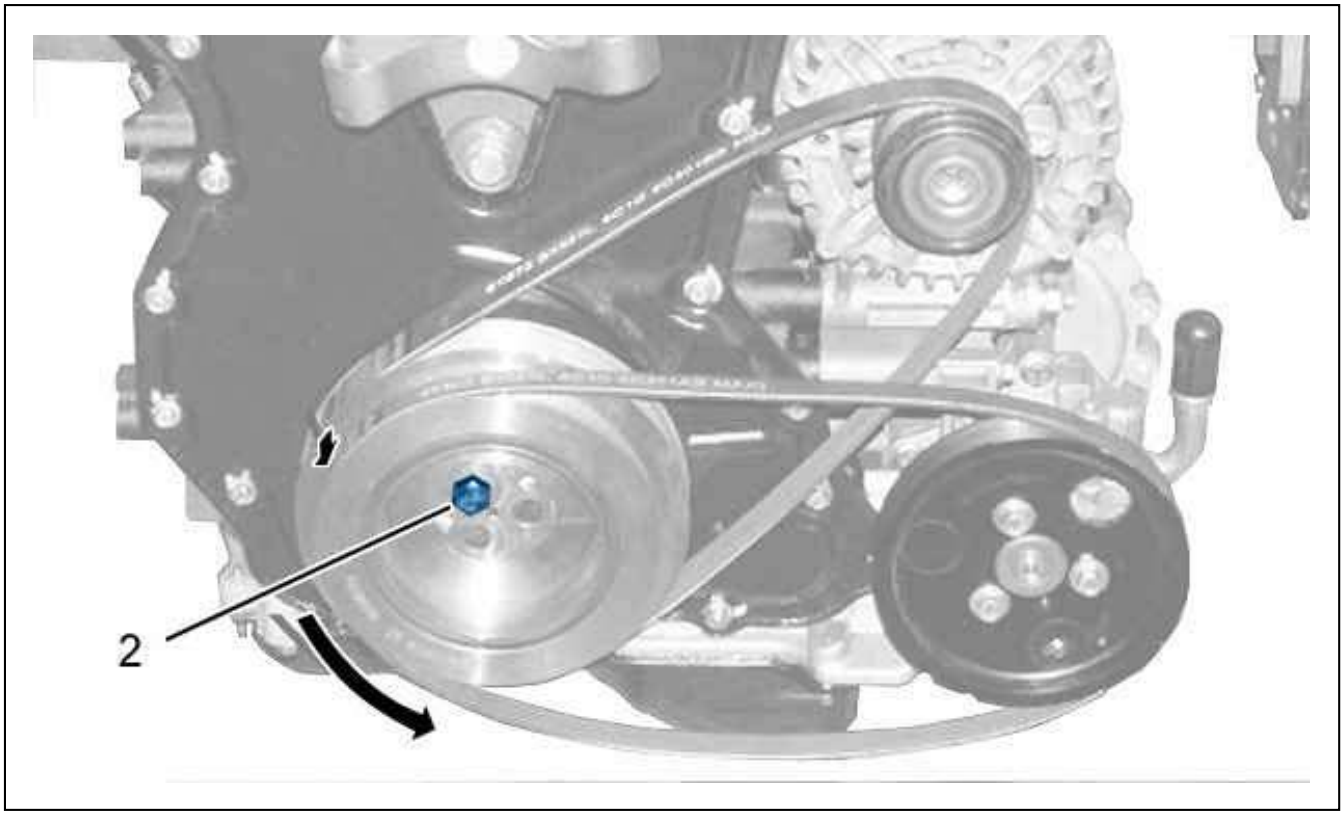

Figure : B1BPSHBD

Move aside the ancillary drive pulley, pivoting it on the fixing bolt (2).

CAUTION : Mark the direction of fitting of the accessories drive belts if they are to be reused.

Remove the accessory drive belts.

2.2. Vehicle with air conditioning

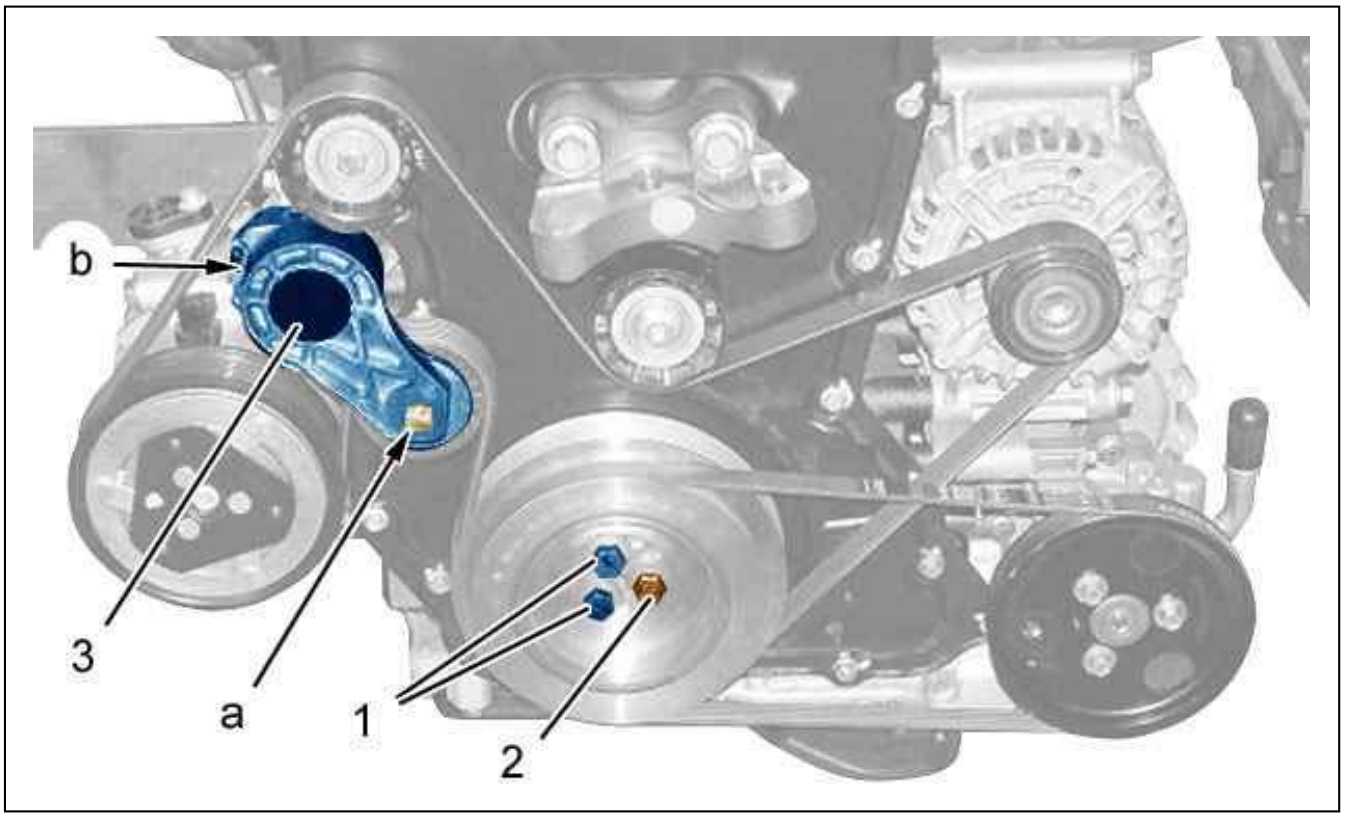

Figure : B1BPSHCD

Compress the dynamic roller tensioner (3) (as "a") (anti clockwise) ; Using tool [1608-E].
Peg (as "b") ; Using tool [0188-Q1].
Remove the accessories drive pulley fixing bolts (1).
Slacken the fixing bolt (2) of the ancillary drive pulley by 2 cm.

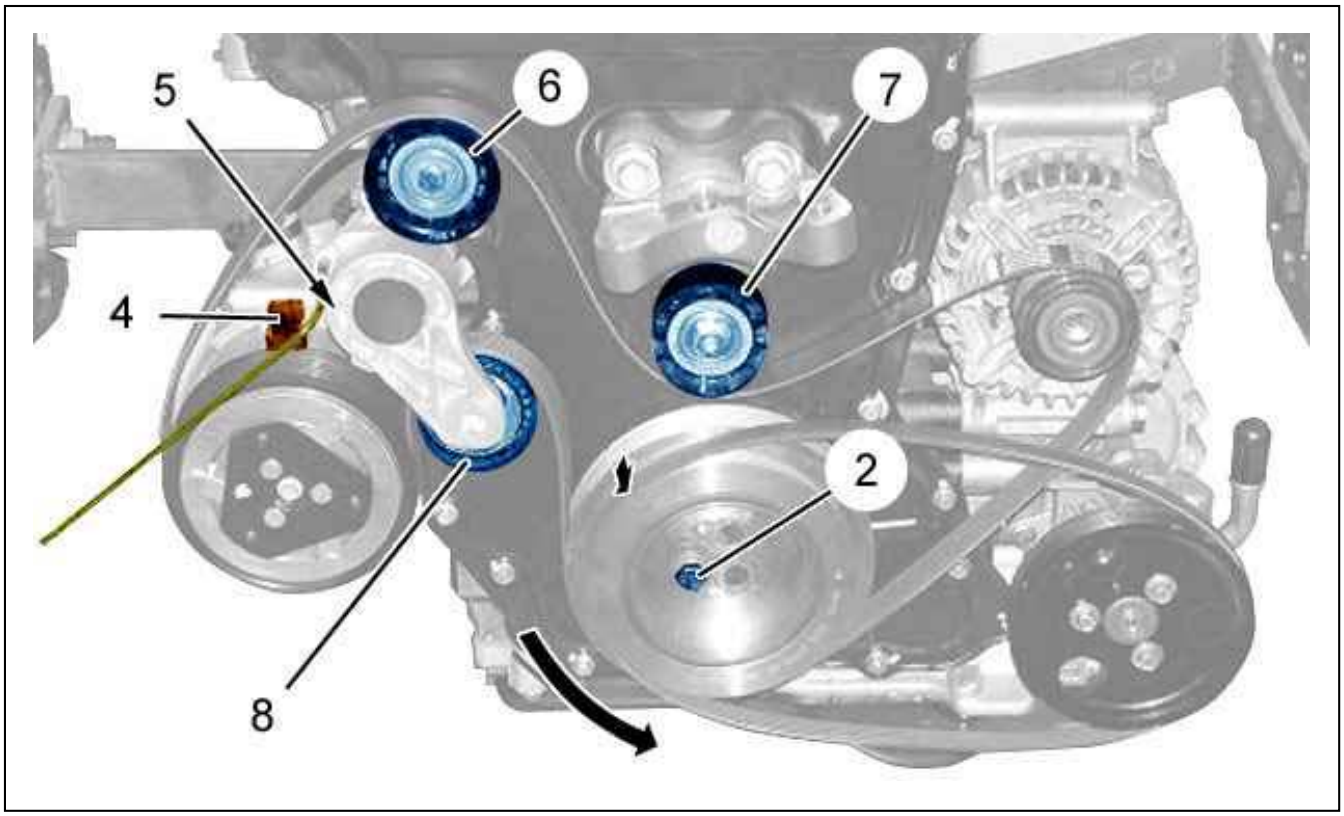

Figure : B1BPSHDD

CAUTION : Mark the direction of fitting of the accessories drive belts if they are to be reused.

Move aside the ancillary drive pulley, pivoting it on the fixing bolt (2).
Disconnect the air conditioning compressor connector (4); By means of a screwdriver.
Remove :

- The dynamic roller tensioner (3) fixing bolts (5)
- The dynamic roller tensioner (3)

CAUTION : Check that the rollers (6),(7) and (8) rotate freely (no play and no stiffness).

Remove the accessory drive belts.

3. Refitting

CAUTION : Adhere to the tightening torques .

CAUTION : Replace the torsional vibration damper double pulley for a distance travelled greater than or equal to 160000 km, when the accessories drive belt is replaced.

3.1. Vehicle with air conditioning

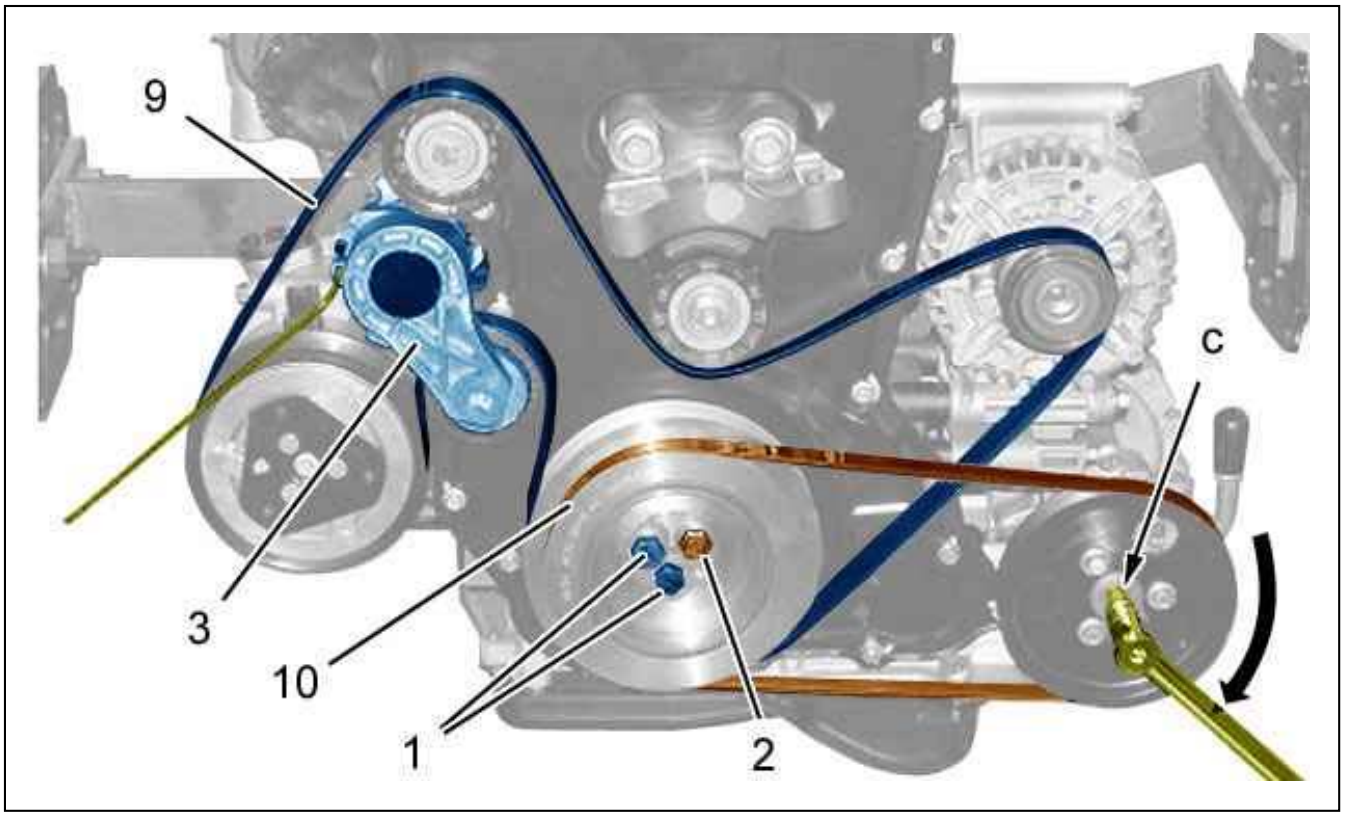

Figure : B1BPSHFD

CAUTION : Mark the direction of fitting of the accessories drive belts if they are to be reused.

CAUTION : Make sure that the ancillary drive belts (9) and (10) are correctly positioned in the grooves of the various ancillary drive pulleys.

Refit :

- The accessories drive belt (9) with the dynamic roller tensioner (3)
- The dynamic roller tensioner (3) fixing bolts (5)
- The accessories drive belt (10)

Turn the power steering pump pulley ; Using a spanner (as "c") (In the direction of the arrow).
Guide the accessories drive pulley by hand.
Maintain the effort (as "c") (In the direction of the arrow).
Refit the fixing screws (1).
Tighten the fixing bolts (1), (2) to the correct torque.
Remove the spanner (as "c").

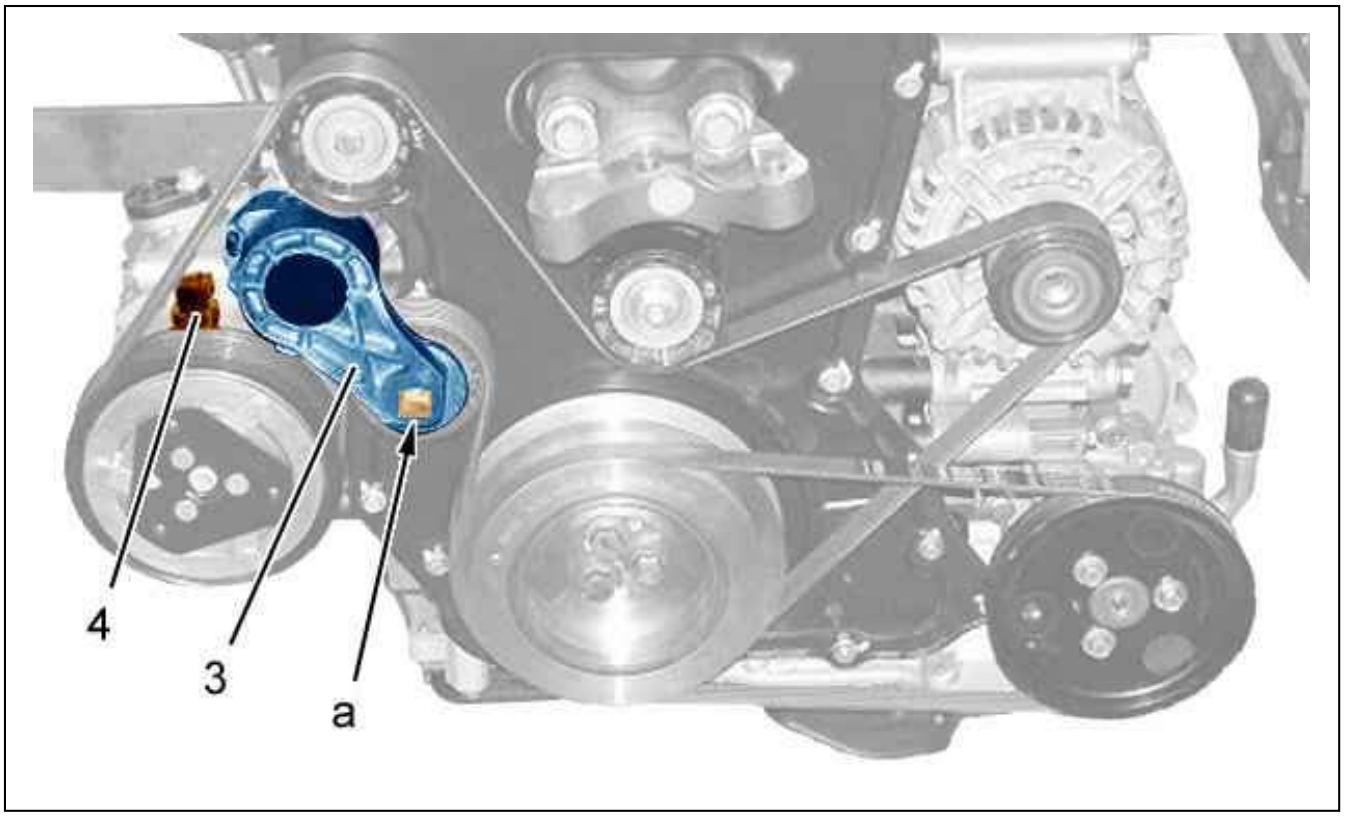

Figure : B1BPSHGD

Compress the dynamic roller tensioner (3) (as "a") (anti clockwise) ; Using tool [1608-E].
Remove the tool [0188-Q1].
Connect the air conditioning compressor connector (4).

3.2. Common operations

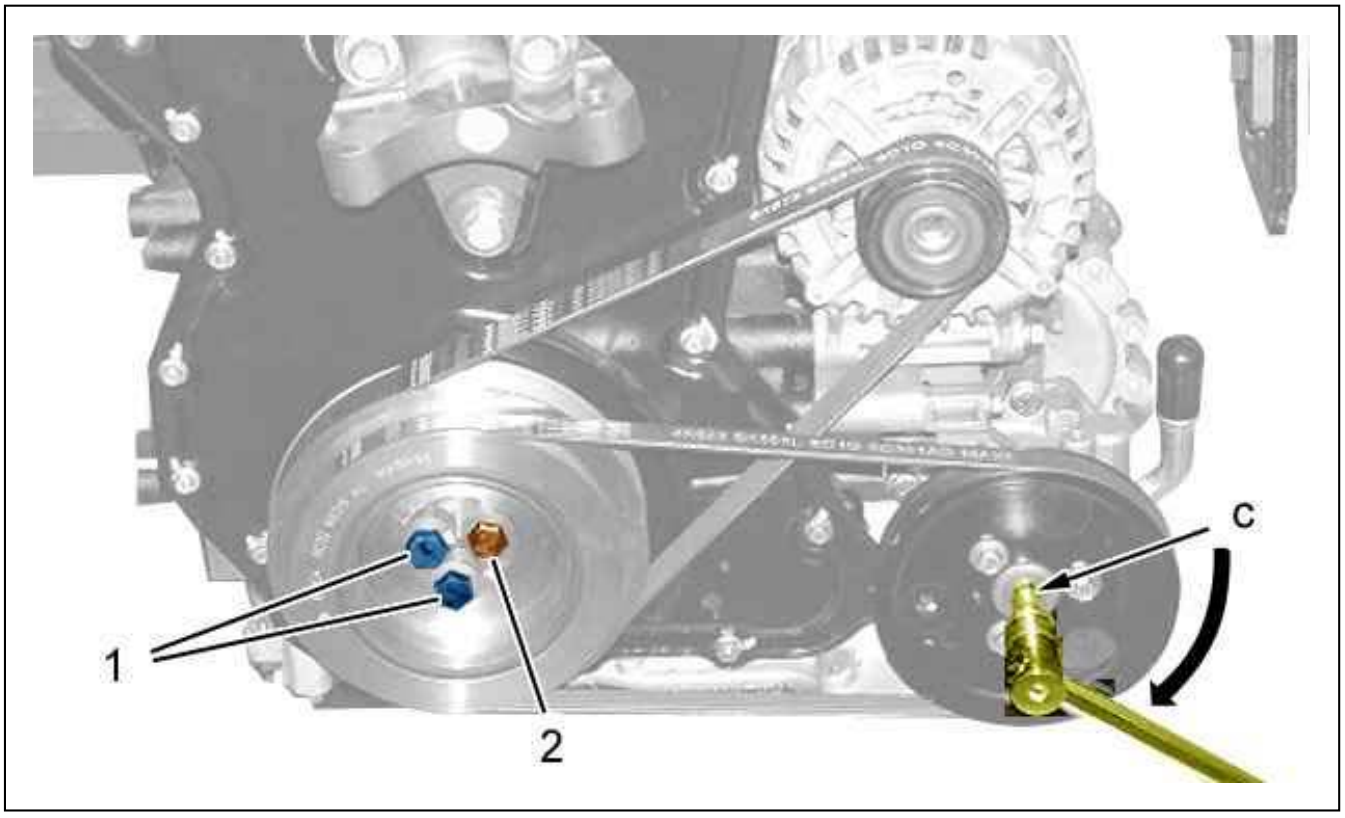

Figure : B1BPSHED

CAUTION : Mark the direction of fitting of the accessories drive belts if they are to be reused.

CAUTION : Always make sure that the ancillary drive belts are correctly positioned in the grooves of the various ancillary drive pulleys.

Refit the accessories drive belts .
Turn the power steering pump pulley ; Using a spanner (as "c") (In the direction of the arrow).
Guide the accessories drive pulley by hand.
Maintain the effort (as "c") (In the direction of the arrow).
Refit the fixing screws (1).
Tighten the fixing bolts (1), (2) to the correct torque.
Remove the spanner (as "c").
Remove the tools [0198-P], [0198-E].
Refit the starter .

4. Verification

Remove one accessories drive pulley fixing bolt .
Set the gearbox in neutral.

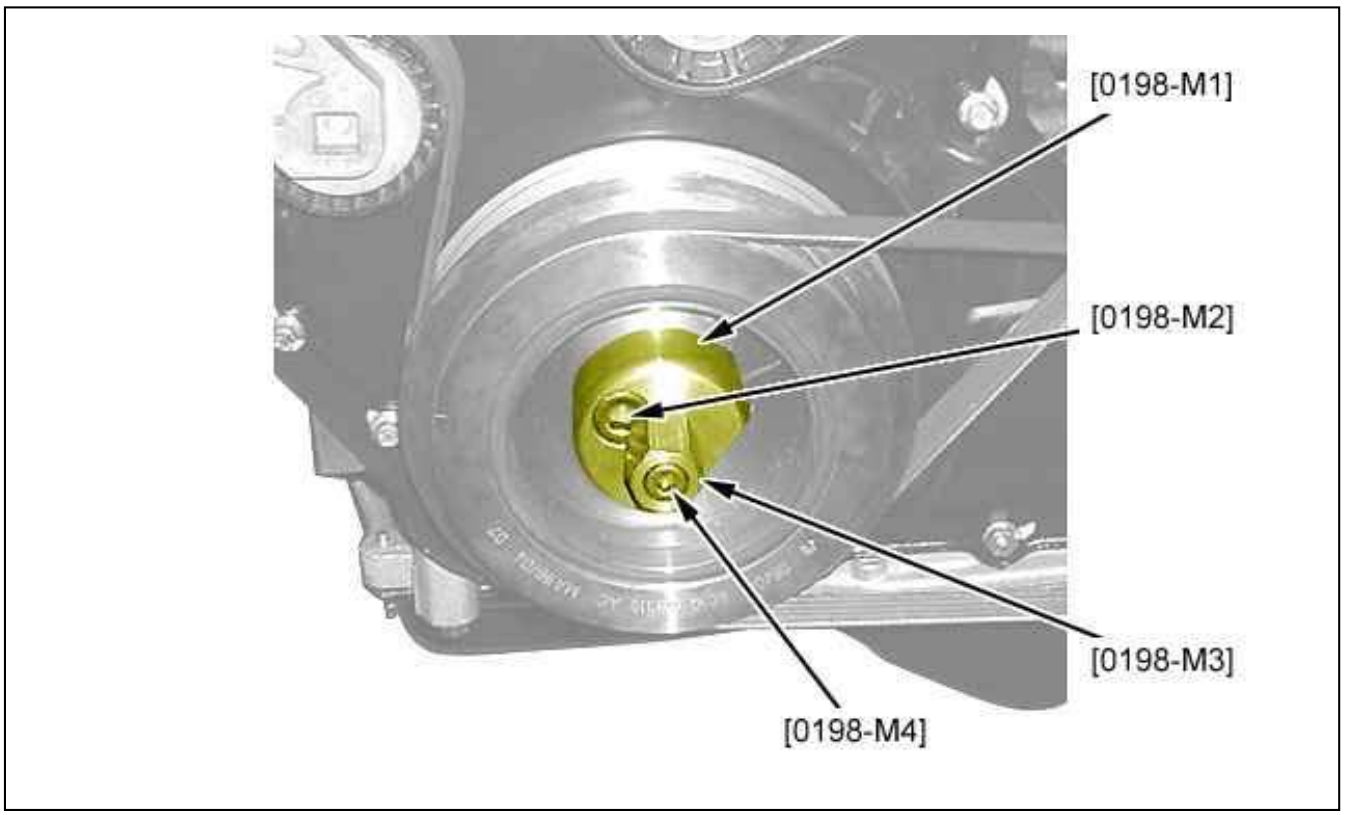

Figure : B1BG1DUD

Fit the tool [0198-M1].
Secure the tool [0198-M1] ; Using the screws [0198-M2].
Fit the tool [0198-M3].
Tighten the bolt [0198-M4] .
Rotate the crankshaft clockwise ; Check that the accessories drive pulley is not warped.
Engage 1st gear.
Remove the tools [0198].

Refit the fixing bolt of the ancillary drive pulley ; Tighten to the specified torque.
Refit :

- The protection plates under the engine
- The front right wheel

CAUTION : Perform the operations to be carried out following reconnection of the battery.

Reconnect the battery negative terminal.

REMOVING - REFITTING : AIR CONDITIONING CONTROL PANEL

ESSENTIAL : Observe the safety and cleanliness recommendations .

1. Presentation



Figure : C5FG08LD

(1) Air conditioning control panel .

2. Preliminary operations

Remove :

- The fascia
- The dashboard cross member

3. Removing

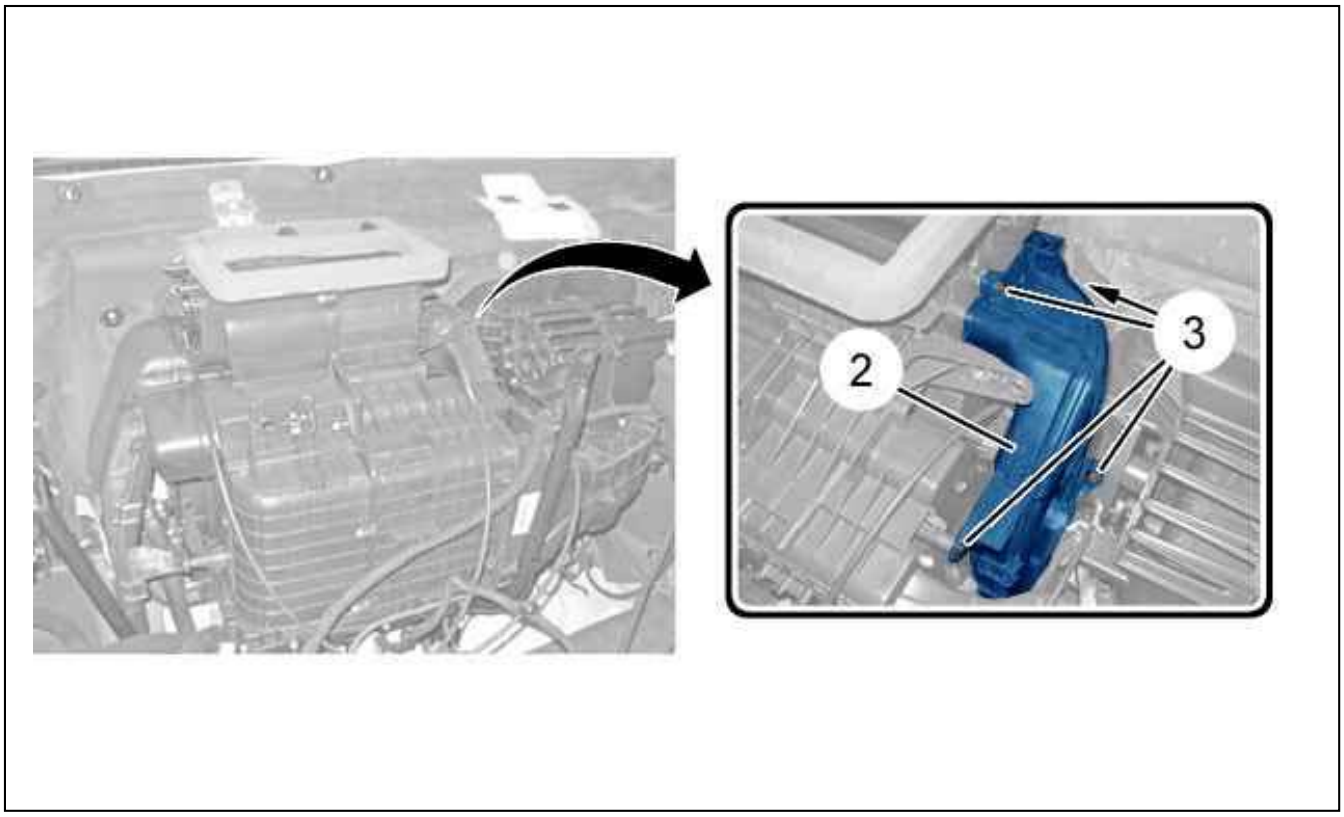

Figure : C5HG0FHD

Remove the bolts (3).
Detach then remove : The pipe (2).

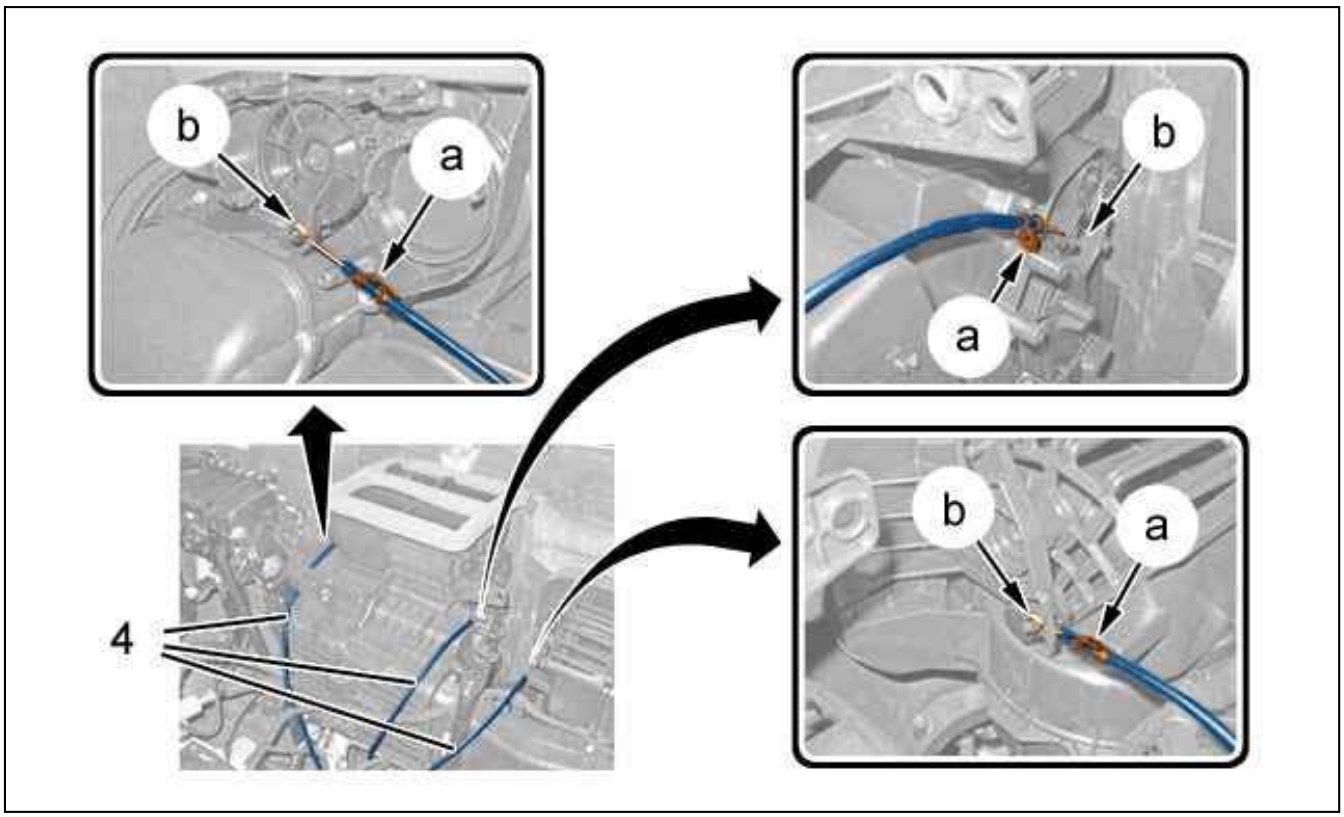

Figure : C5HG0FID

Unclip the cables (4) (at "a", "b") ; Using a thin screwdriver.

Remove the air conditioning control panel (1).

4. Refitting

CAUTION : Always replace the faulty fixings of the cable .

Proceed in the reverse order to removal.
Check the operation of the equipment.

REMOVING - REFITTING : FASCIA PANEL AIR VENTS

ESSENTIAL : Observe the safety and cleanliness recommendations .

1. Tooling

tool	Reference	Designation
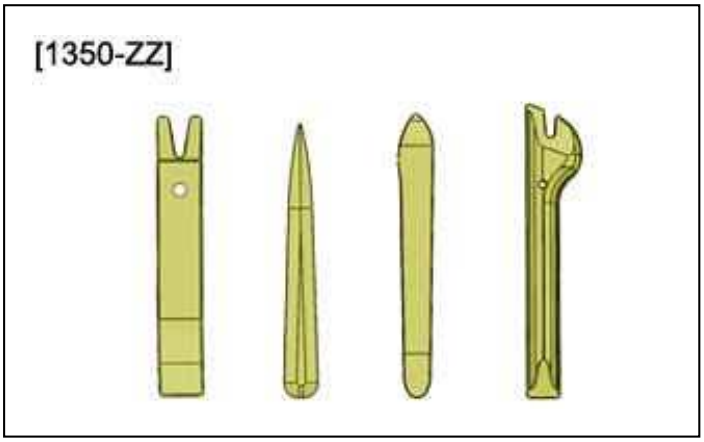 Figure : E5AG02MT	[1350-ZZ]	Stripping tools

2. Removing

2.1. Air vents (At the centre of the fascia panel)

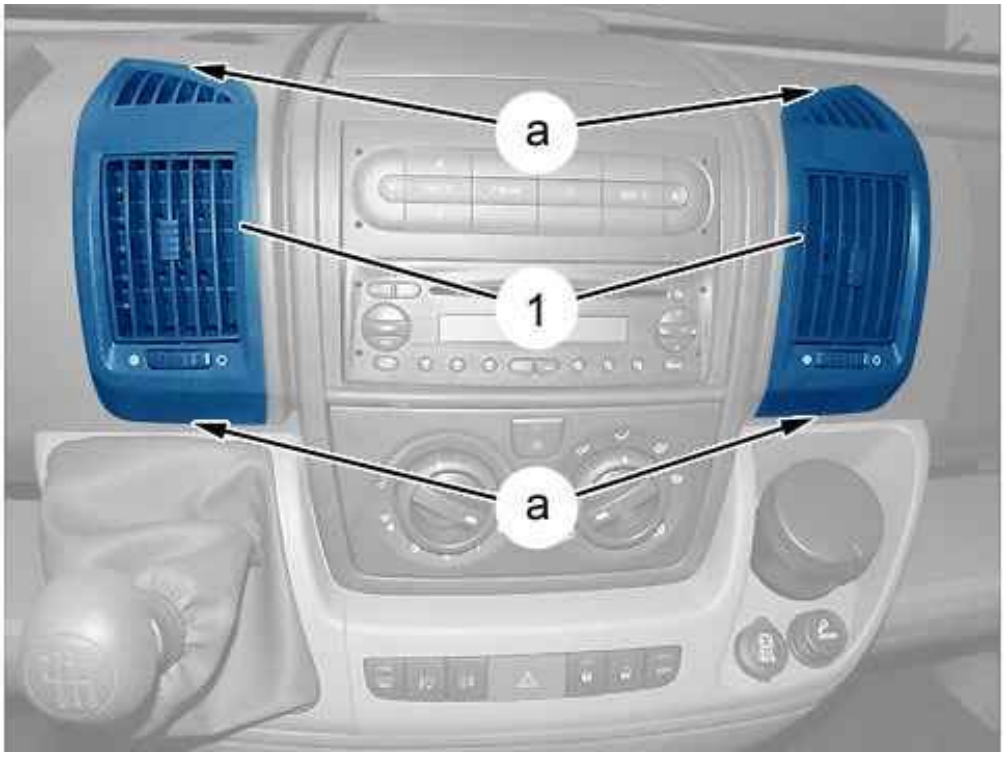

Figure : C5FG0MTD

Unclip : The vents (1) (as "a") ; Using tool [1350-ZZ].
Detach : The vents (1) (Pull outwards).
Remove : The vents (1).

2.2. Vent (On the driver’s side)

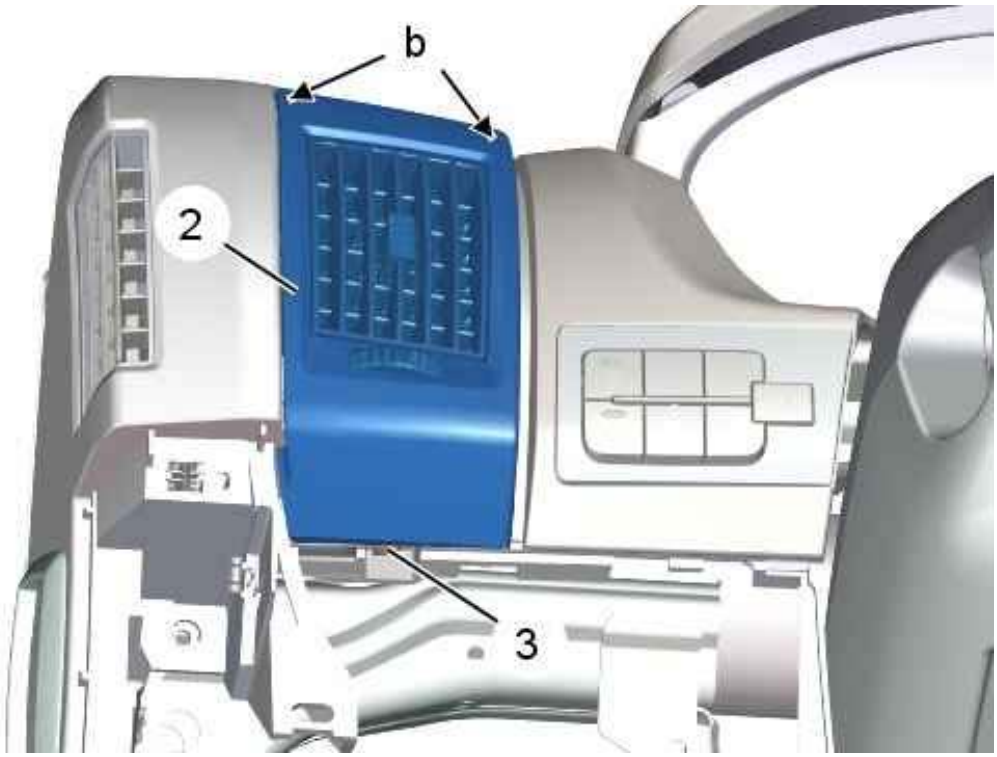

Figure : C5FG0MUD

Remove :

- The trim (Fascia panel switches - On the driver’s side)
- The (3) bolt

Unclip : The air vent (2) (as "b") ; Using tool [1350-ZZ].
Detach : The air vent (2) (Pull outwards).
Remove : The air vent (2).

2.3. Vent (Passenger ’s side)

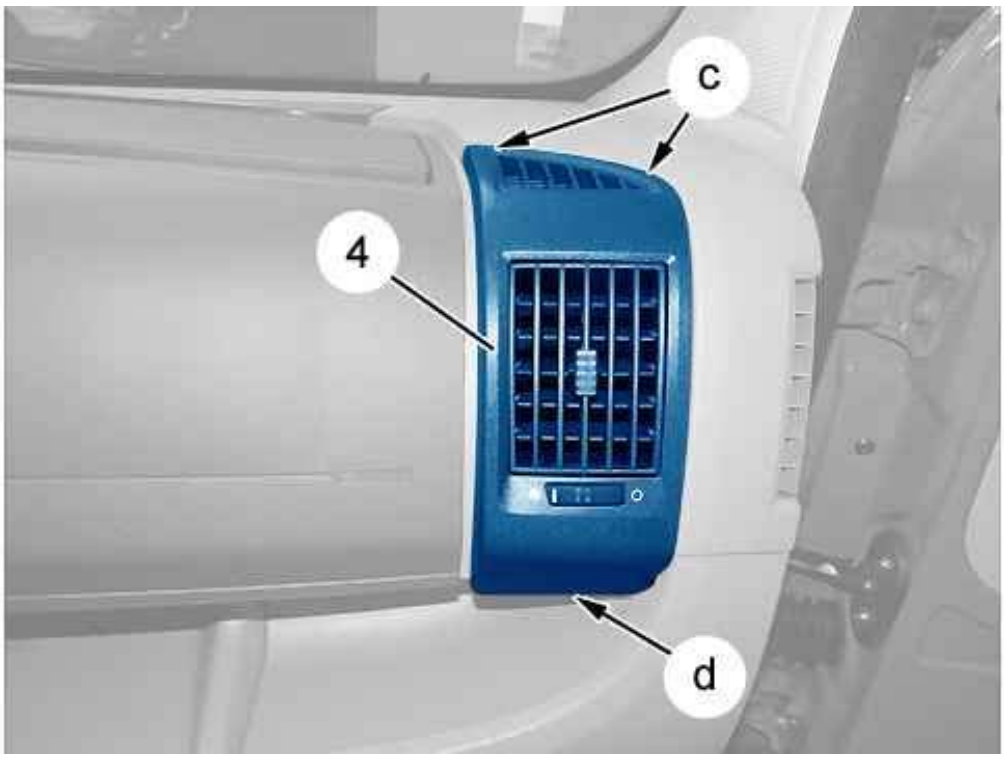

Figure : C5FG0MVD

Remove bolts (as "d").
Unclip : The air vent (4) (as "c") ; Using tool [1350-ZZ].
Detach : The air vent (4) (Pull outwards).
Remove : The air vent (4).

2.4. The fascia upper ventilation grille

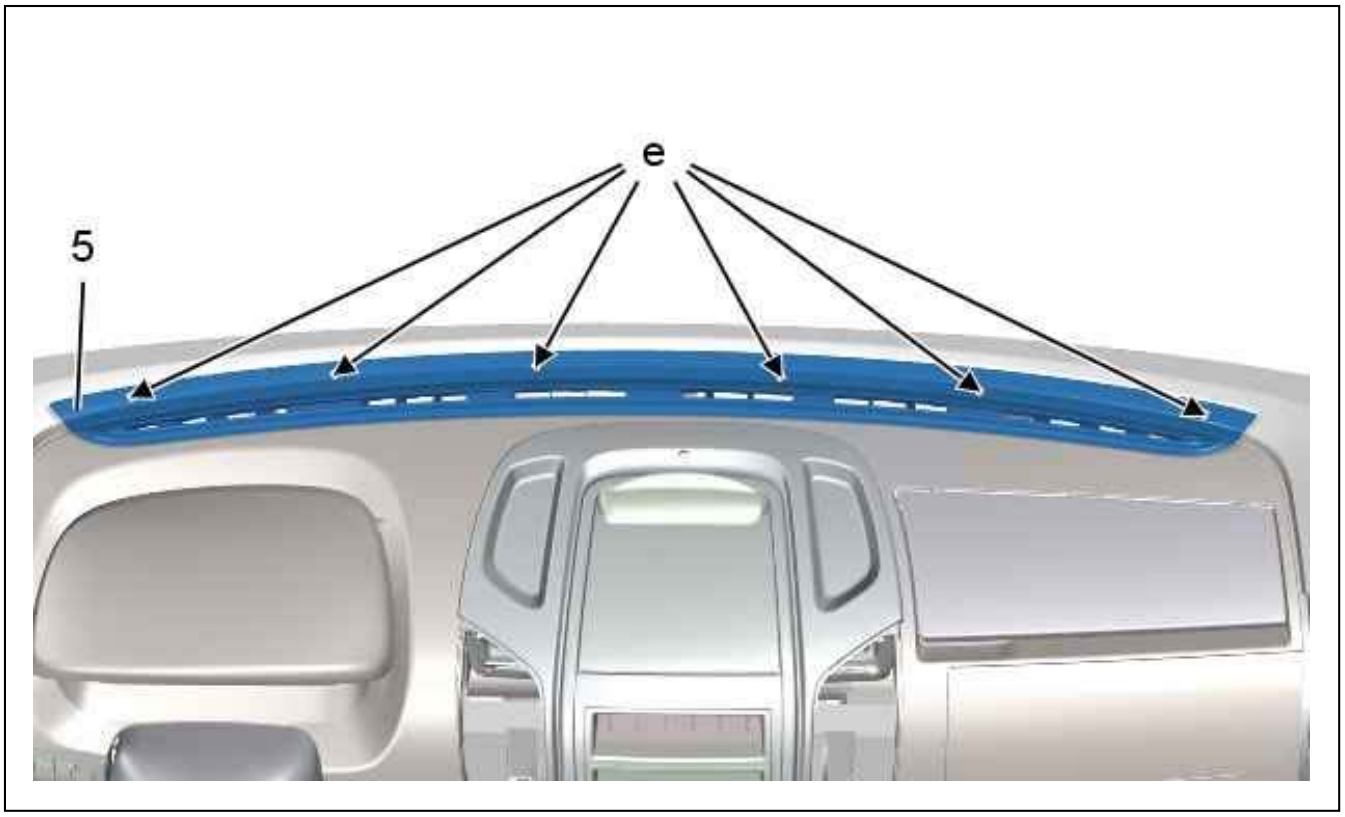

Figure : C5FG0MWD

Unclip the fascia upper ventilation grille (5) (as "e") ; Using tool [1350-ZZ].
Remove the fascia upper ventilation grille (5).

3. Refitting

Proceed in the reverse order to removal.
Check all the equipment works.

REMOVING - REFITTING : FASCIA STORAGE COMPARTMENT (R.H.D.)

ESSENTIAL : Observe the safety and cleanliness recommendations .

1. Tooling

tool	Reference	Description
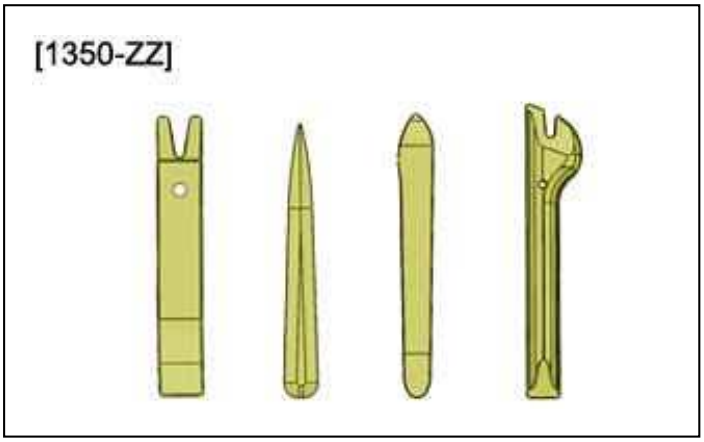 Figure : E5AG02MT	[1350-ZZ]	Stripping tool

2. Removing

2.1. Glovebox (At the centre of the fascia panel)

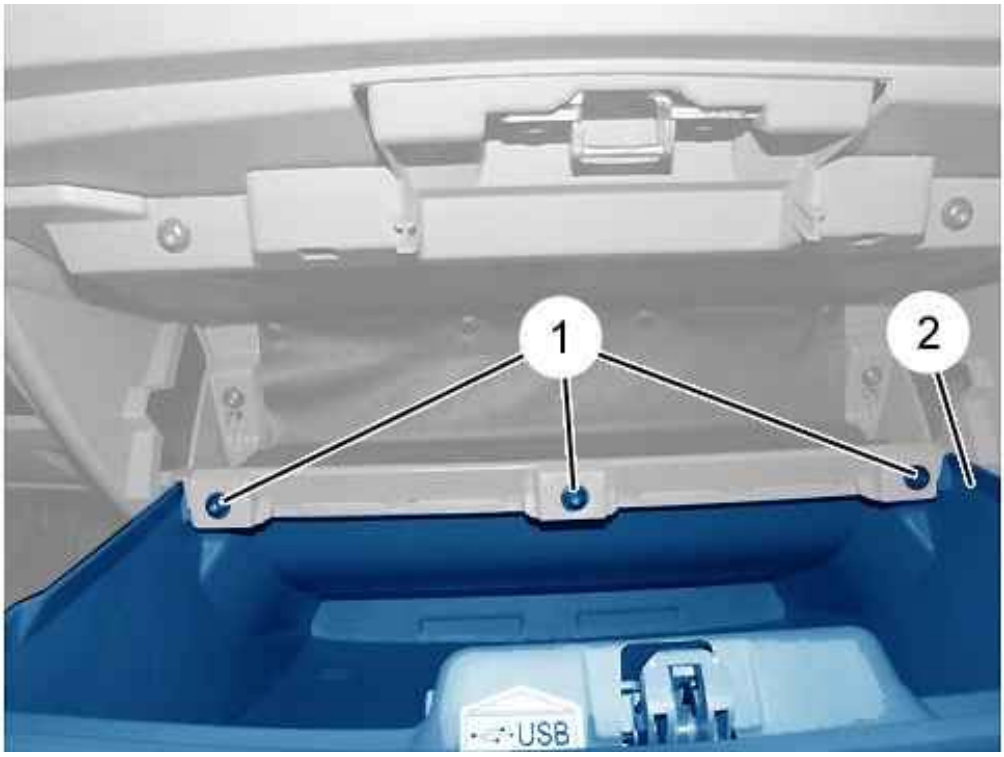

Figure : C5FG0MYD

Open the cover (2) of the glove box.
Remove the bolts (1).
Detach and remove the glove box lid (2).

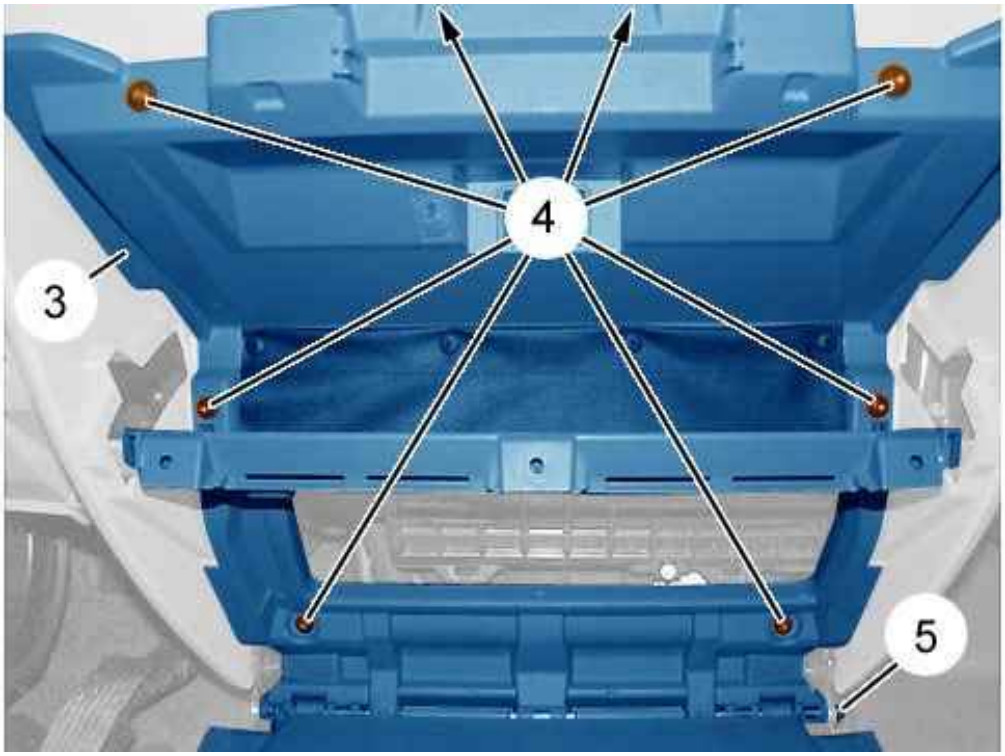

Figure : C5FG0N1D

Remove the bolts (4).
Unscrew nut (5).
Release the glove box (3).
Remove the glove box (3).

2.2. Fascia lower oddment pocket (Passenger ’s side)



Figure : C5FG1GGD

Open the cover (6) of the glove box.
Unclip : The glove box lid (6) (as "a") ; Using tool [1350-ZZ].
Detach : The glove box lid (6).



Figure : C5FG1GHD

Remove :

- The bolts (7), (8)
- The glove box (9)

2.3. Fascia upper glovebox (Passenger ’s side)

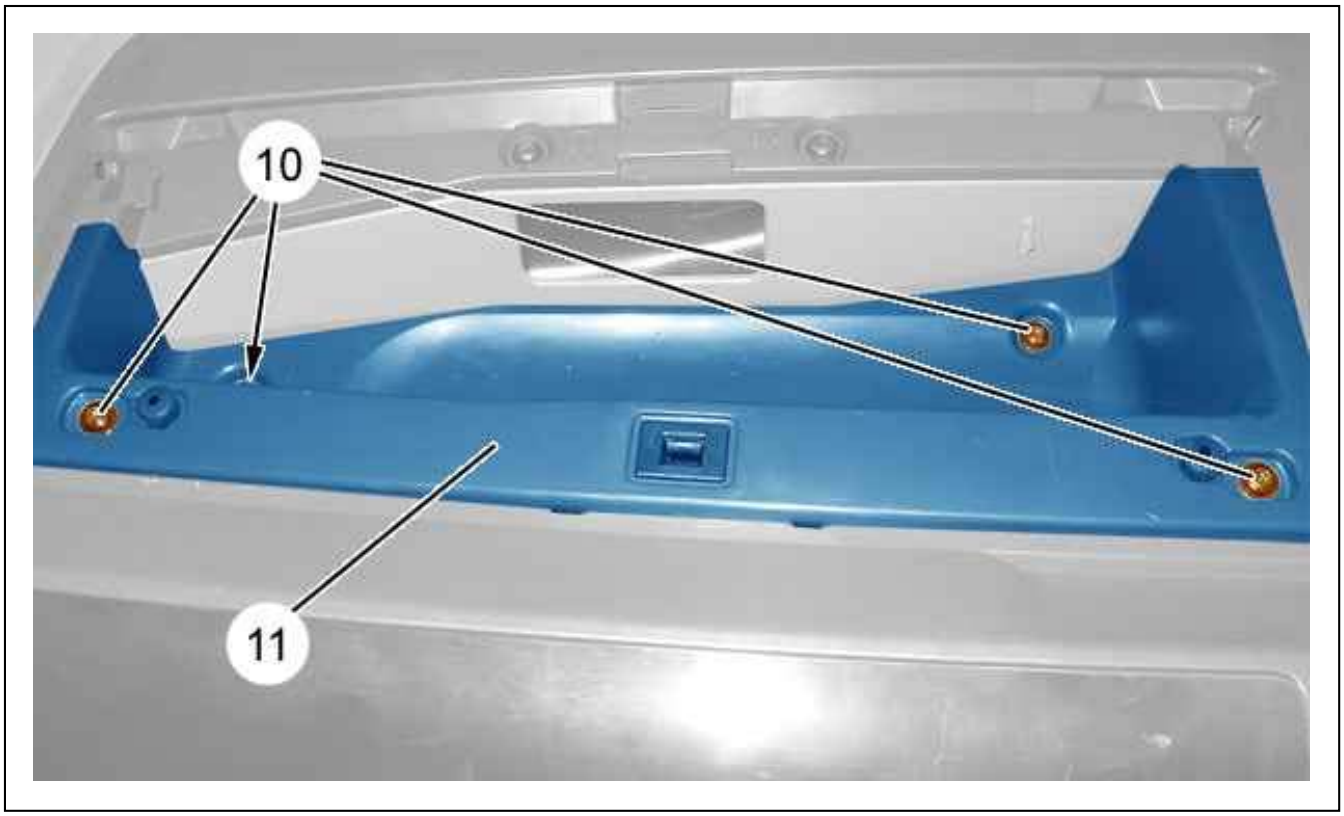

Figure : C5FG1GID

Remove :

- The bolts (10)
- The bottom of the storage compartment (11)

3. Refitting

Proceed in the reverse order to removal.
Check the operation of the equipment.

REMOVING - REFITTING : AUTOMATIC AIR CONDITIONING CONTROL PANEL

ESSENTIAL : Observe the safety and cleanliness recommendations .

1. Tooling

Tools	Reference	Designation
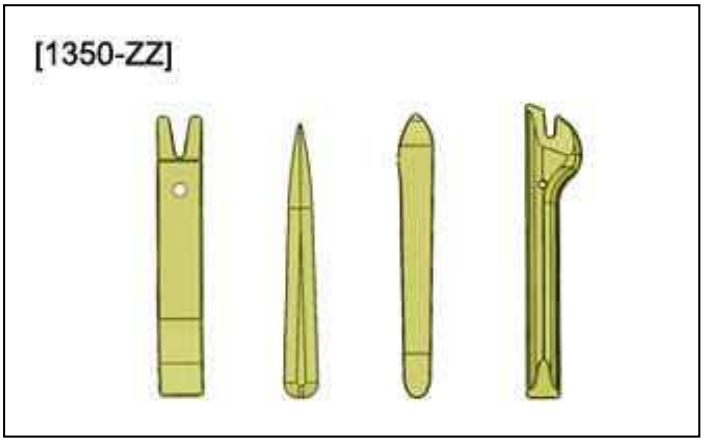 Figure : E5AG02MT	[1350-ZZ]	Stripping tools

2. Removing

Disconnect the battery .

Remove :

- The upper storage tray by the audio system (according to equipment)
- The audio system
- The hands-free kit (according to equipment)
- The dashboard vents

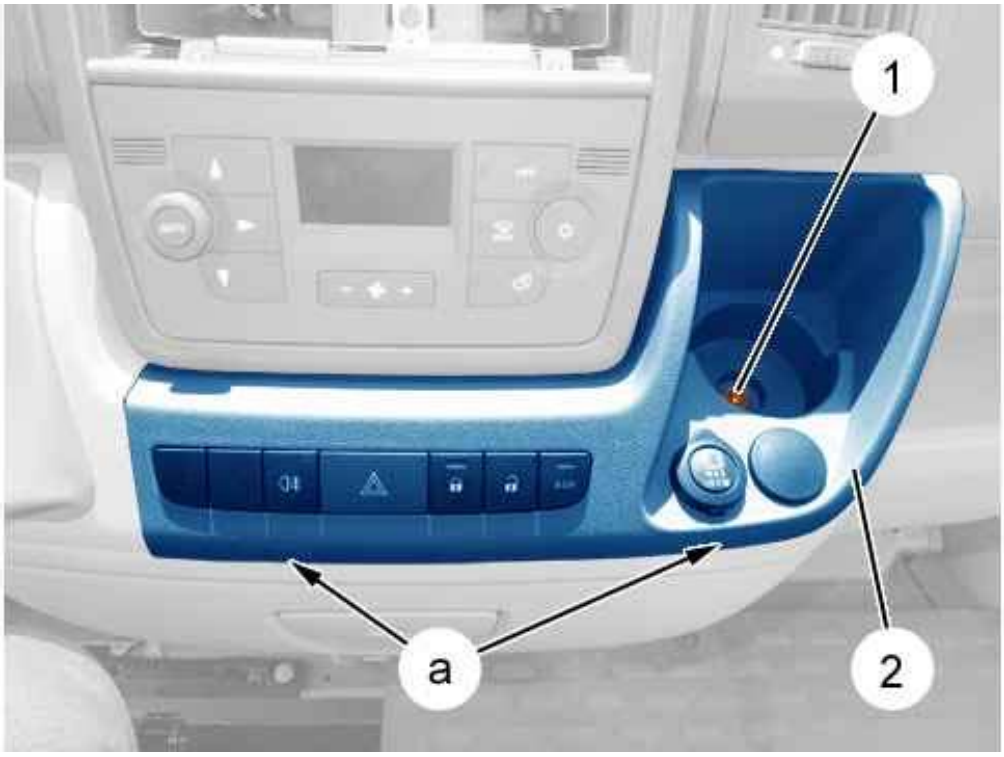

Figure : C5FG1GPD

Remove the bolt (1).
Unclip the trim (2) (at "a") ; Using tool [1350-ZZ].
Release the trim (2).

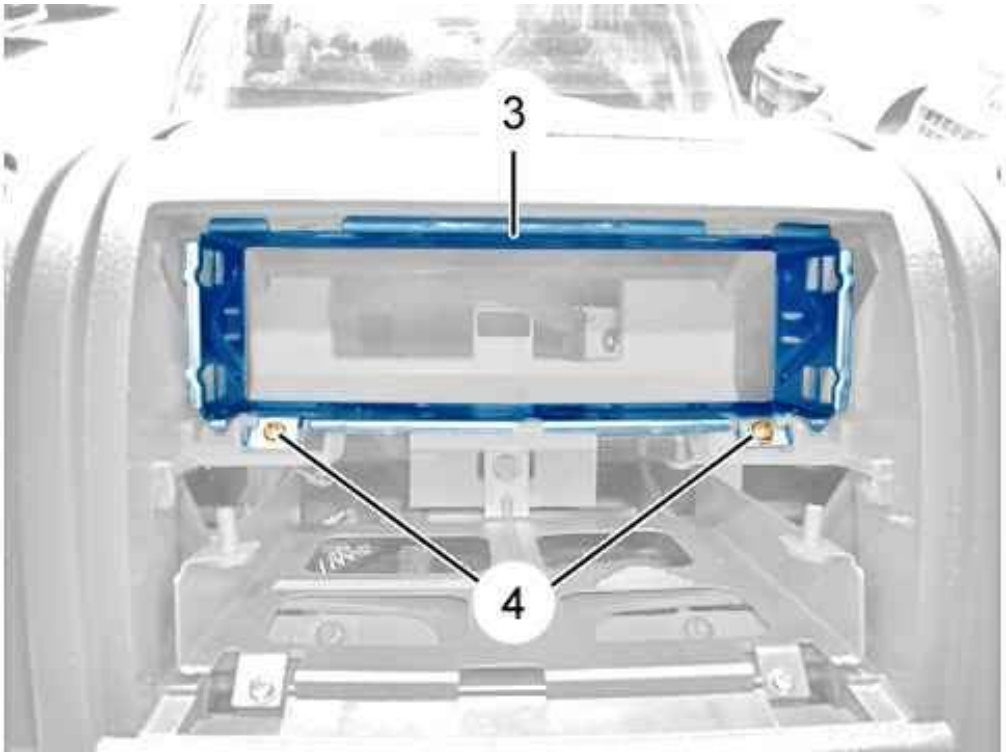

Figure : C5FG1GQD

Remove the bolts (4).
Detach then remove : The audio system bracket (3).

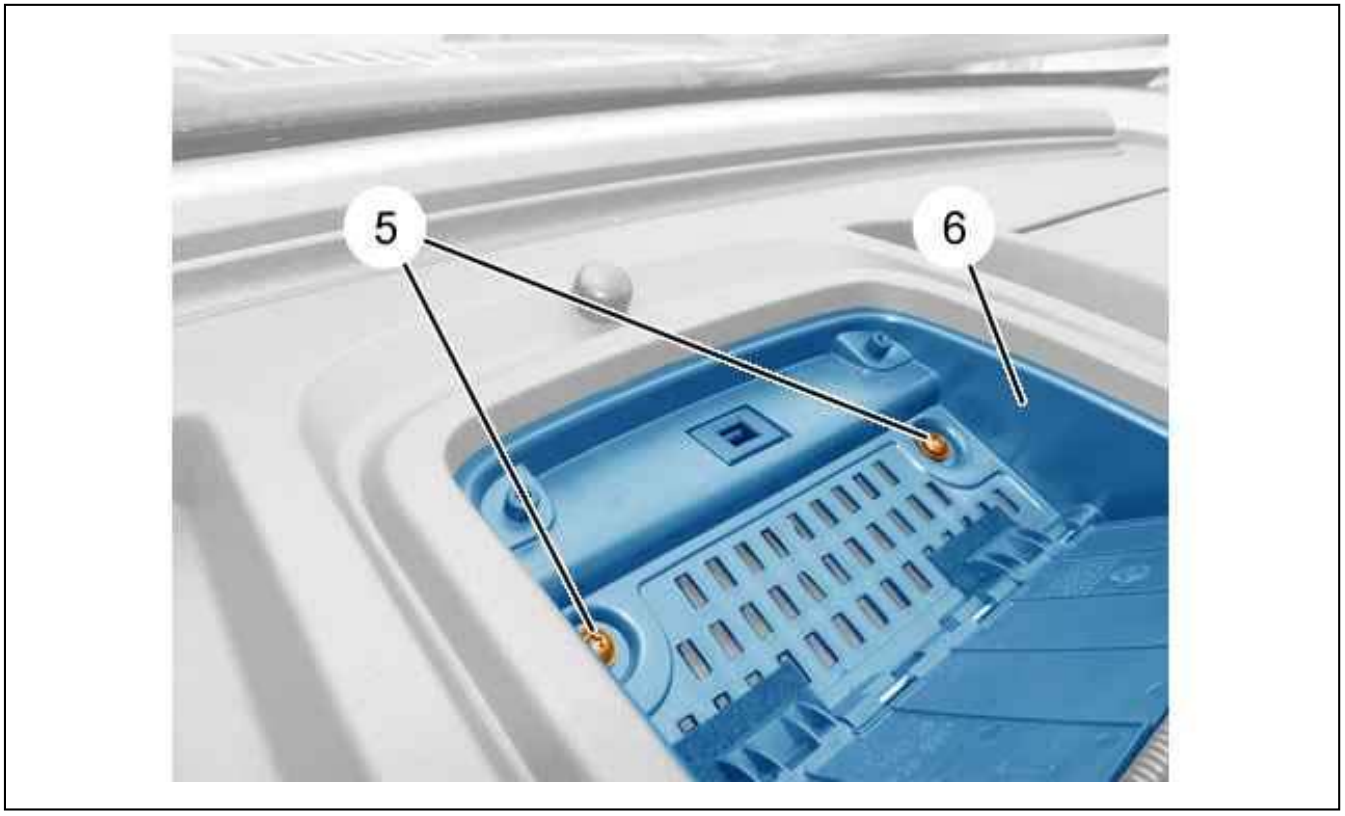

Figure : C5FG1GRD

Open : The movable shelf (6).
Remove the bolts (5).

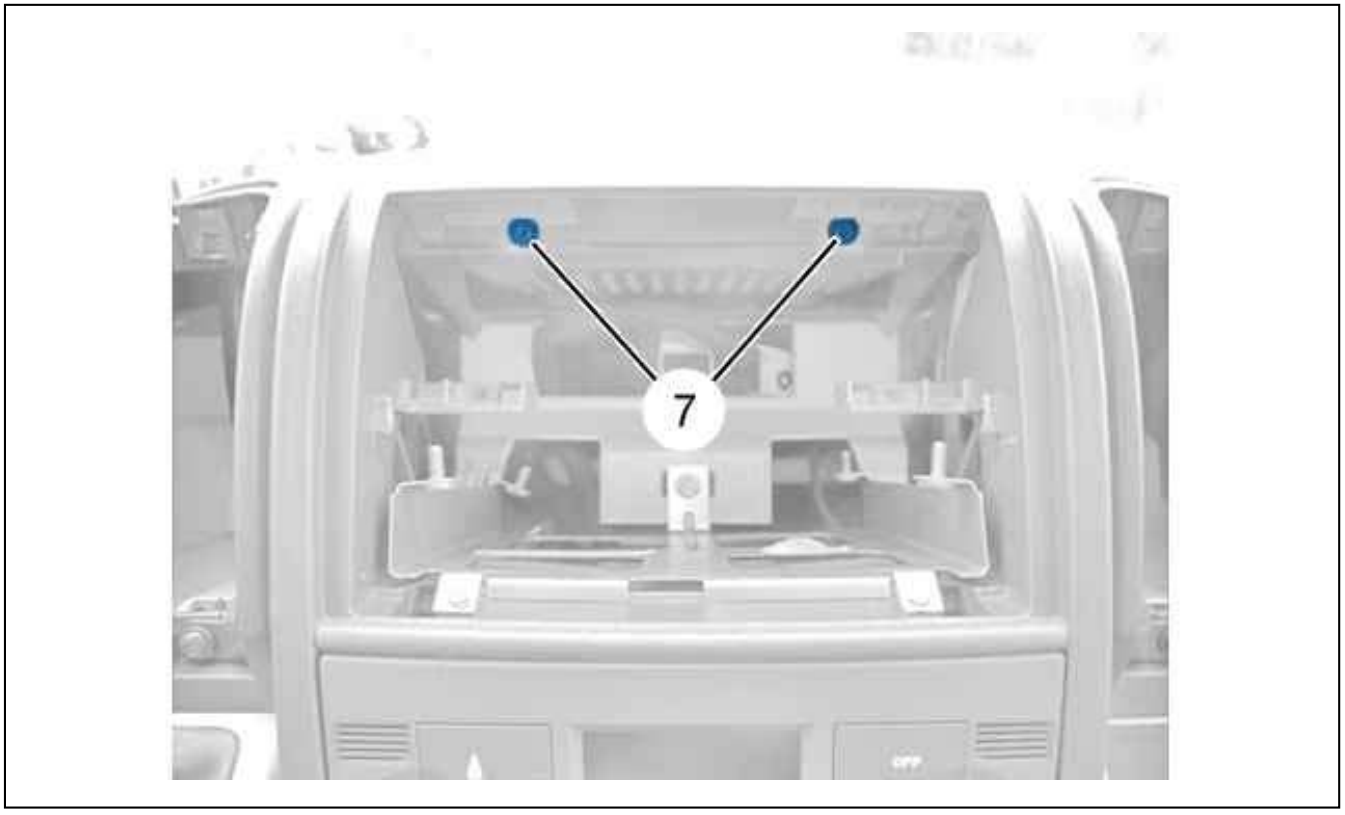

Figure : C5FG1GSD

Remove :

- The bolts (7)
- The movable shelf (6)

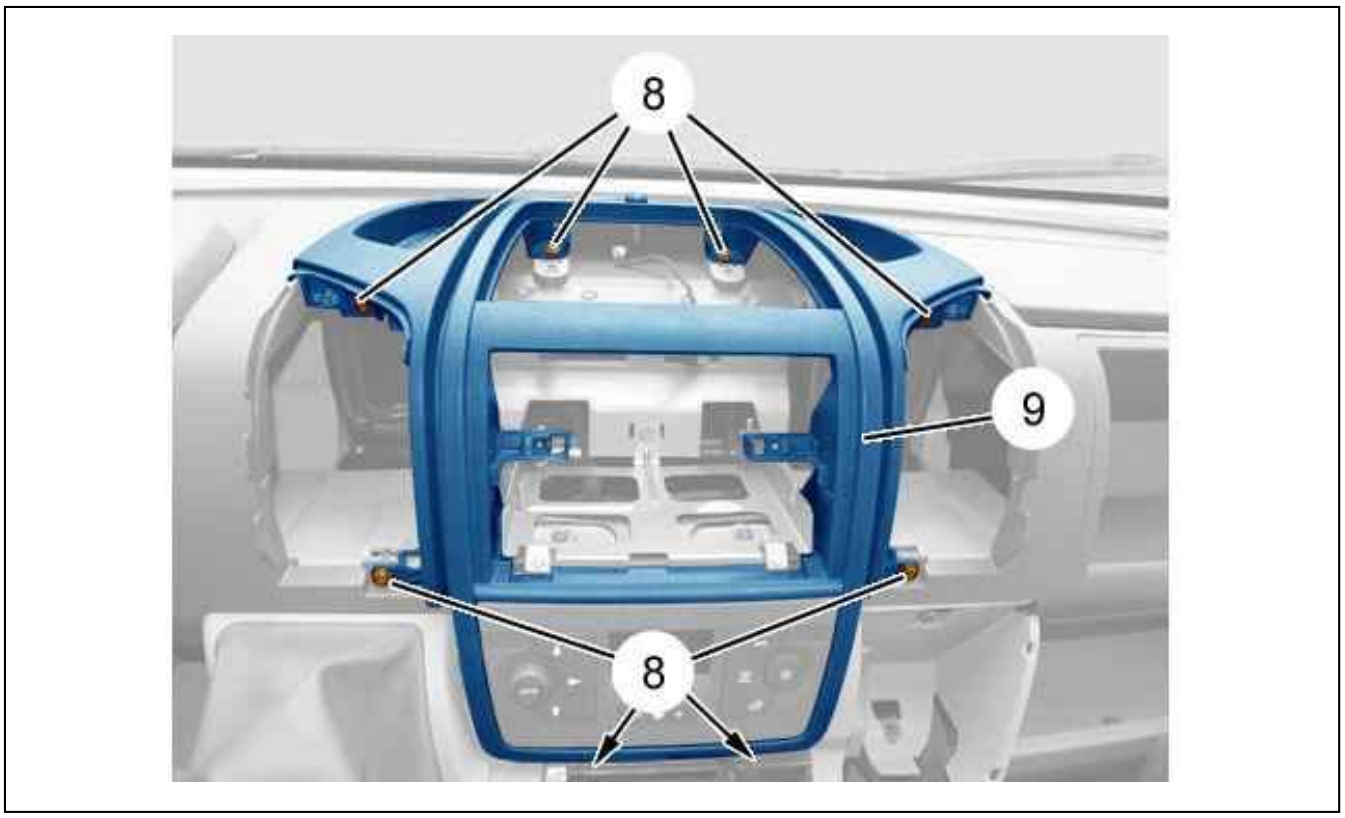

Figure : C5FG1GTD

Remove the bolts (8).
Unclip the trim (9) ; Using tool [1350-ZZ].

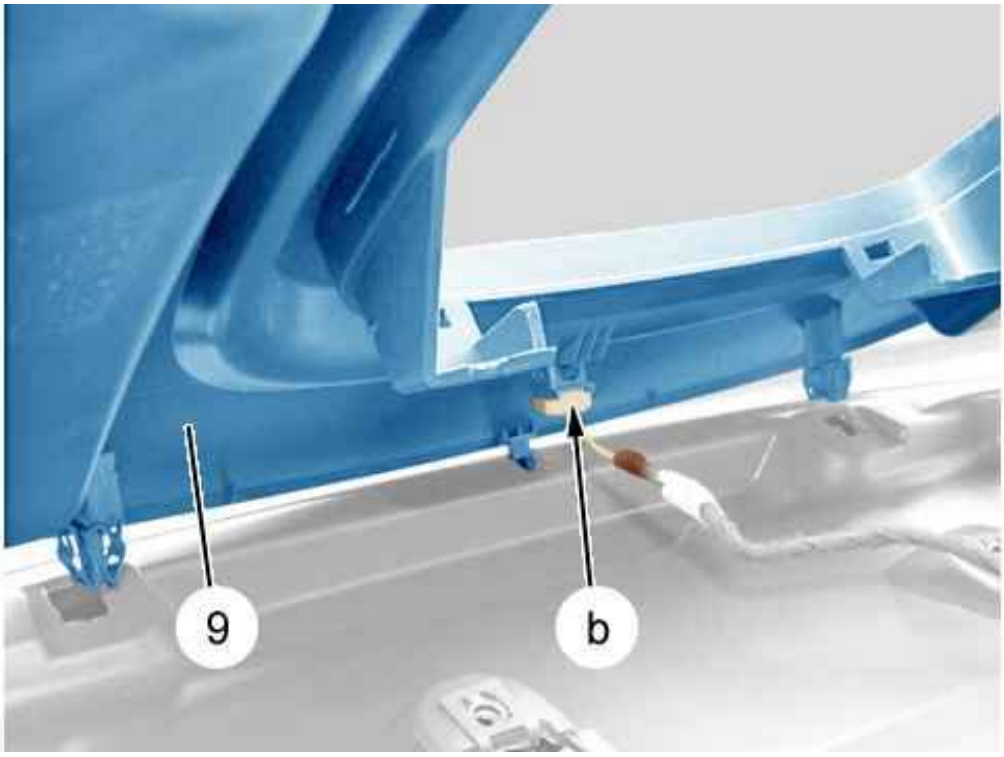

Figure : C5FG1GUD

Unclip the temperature sensor (at "b").
Remove the trim (9).

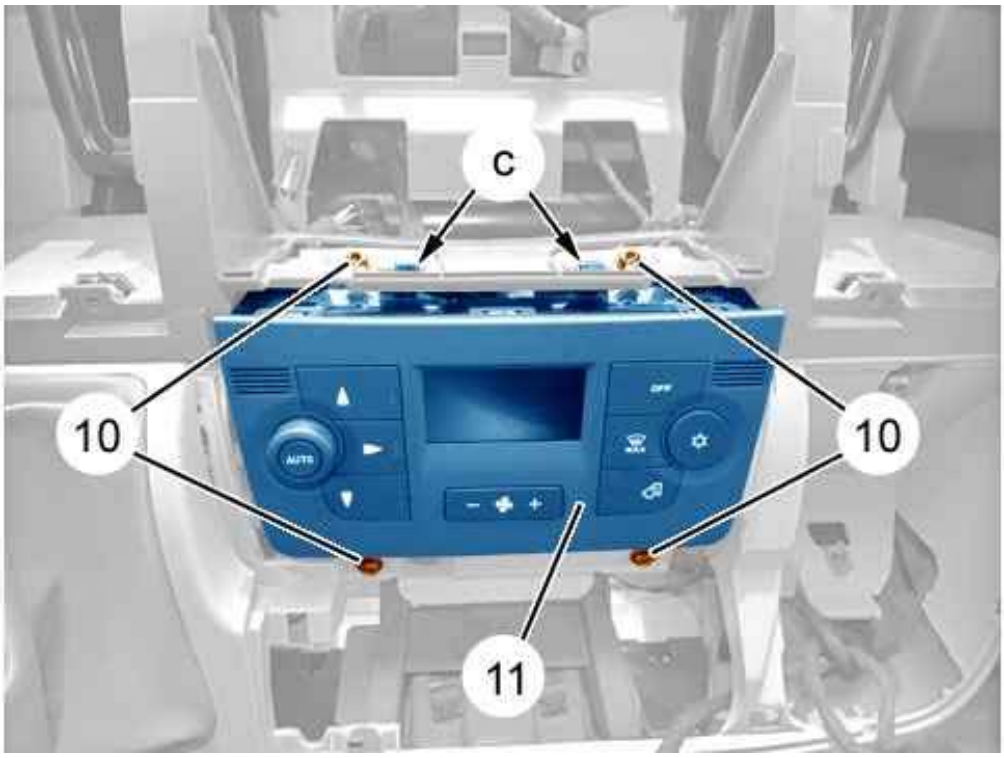

Figure : C5FG1GVD

Remove the bolts (10).

Unclip : The automatic air conditioning control panel (11) (at "c").
Detach : The automatic air conditioning control panel (11) (towards the interior of the dashboard).

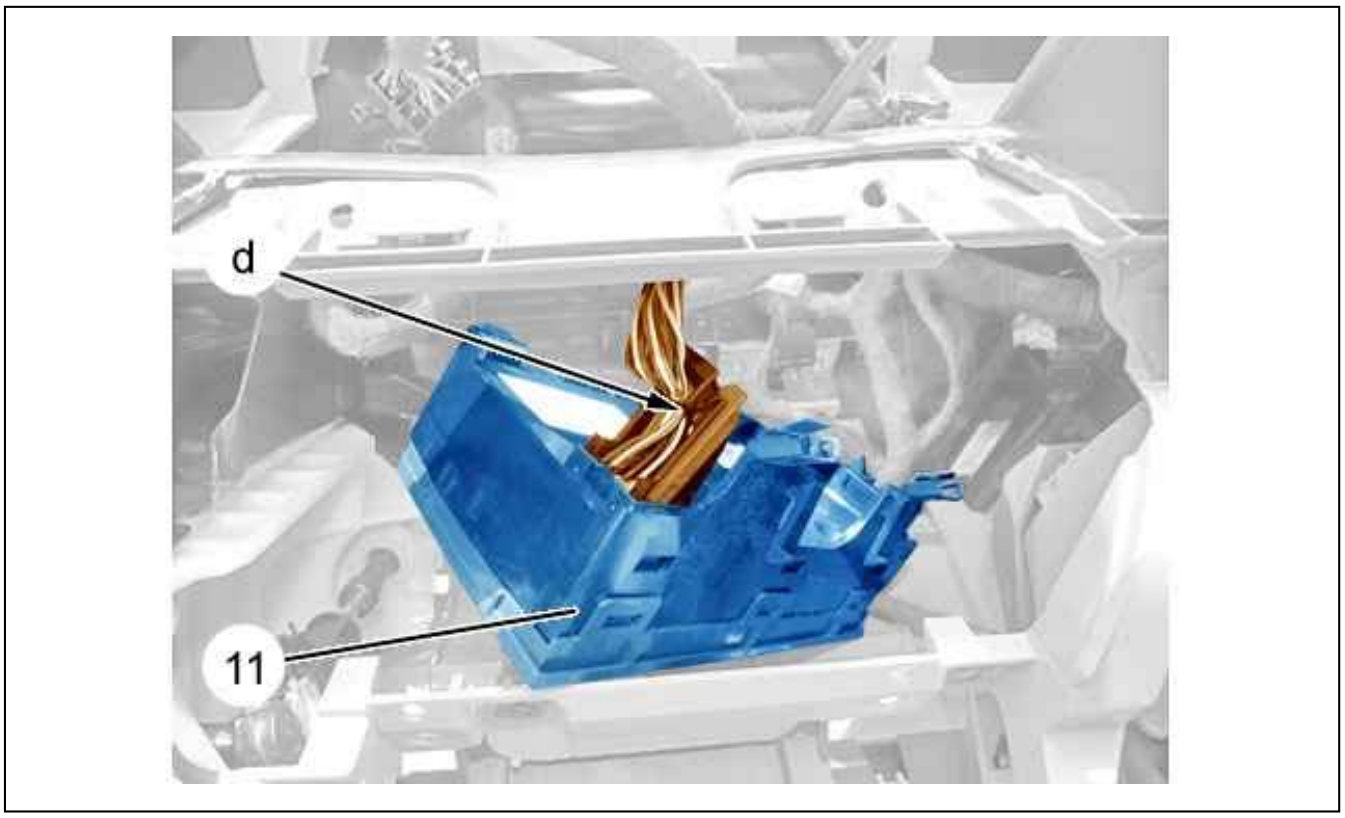

Figure : C5FG1GWD

Disconnect the connector (at "d").
Remove : The automatic air conditioning control panel (11).

3. Refitting

CAUTION : Check that all the various equipment operates, before refitting the manual air conditioning control pane (11).

Proceed in the reverse order to removal.
Reconnect the battery.
Check the operation of the equipment.

TECHNICAL NOTE : CHECK OF THE AIR CONDITIONING CIRCUIT

1. Check: air conditioning compressor

CAUTION : Before carrying out any work on the air conditioning compressor, top up the air conditioning circuit charge
If the air conditioning circuit failure persists : Make the following checks.

1.1. Preliminary checks

Visually check : The air-conditioning compressor :

- Check that the frame has not suffered any knocks and that it is not distorted
- Check that the pulley has not suffered any knocks or bangs
- Check that the clutch engages when the coil is supplied with 12V
- Check the condition of the supply cable and of the connector
- Check that the body of the air conditioning compressor is not cracked (at the air conditioning compressor fixing points)
- Check that the air conditioning compressor intake and discharge ports are not damaged

fault: Noise		
Symptoms	Possible causes	Solutions
Noise coming from the aircon compressor (Clutch not engaged)	Pulley ball bearing damaged	Replacement of the pulley
	Knock to the drive plate (Contact between drive plate and pulley)	Replacement of the drive plate and if necessary of the pulley
Considerable operating noise (Clutch engaged)	Gas charge too high	Observance of the specification when filling the air conditioning circuit
Operating noise and vibration in the passenger compartment	Air conditioning loop pipes in contact with other components of the vehicle	Check that there is no fouling of the pipes
Noise generated by the slipping of the air conditioning clutch	Presence of oil or grease at the clutch	Verify : The cleanness of the air conditioning compressor drive plate and pulley
Intermittent or permanent prolonged knocking	Presence of foreign particles under the intake or discharge valves	Verify : The cleanness of the air conditioning circuit

Operating fault		
Symptoms	Possible causes	Solutions
The clutch does not engage when the air conditioning is activated	Bad contact at the connectors	Verify : The connections
	Incorrect supply	Check whether the supply on the engine harness side is 12V : No over-voltage, no excess current
The clutch engages, but no cold air is produced	Abnormal air conditioning circuit charge	Verify : The refrigerant gas charge

Interpretations of the pressures measured in the air conditioning circuit (Vehicle stationary, engine running)					
High pressure (approximately	High pressure (approximately	Low pressure	Symptoms	Possible causes	Solutions

20°C)	25°C)				
8 to 9 bars	9 to 10 bars	3 bars	Does not produce cold air	Excess oil in the loop	Discharge the refrigeran gas. Drain all of the oil from the circuit. Extract a vacuum in the circuit. Refill the circuit with gas
				Air or humidity in the loop	
PRESSURE > 11 bars	PRESSURE > 12 bars	PRESSURE > 4,2 bars	The temperature of the intake pipe is lower than the temperature of the evaporator	Opening of the air conditioning pressure control valve too great	Replace the air conditioning pressure control valve
			The high and low pressures become equal when the air conditioning compressor stops and these pressures fluctuate when the air conditioning compressor is operating	Intake or discharge valve jammed open by a particle or broken	Replace : The air-conditioning compressor
Pressure lower than 6 bars	Pressure lower than 7 bars	Pressure lower than 2,4 bars	Does not produce cold air	Not enough refrigerant gas	Discharge the refrigeran gas Test for leaks Extract a vacuum Refill the circuit with gas
			The temperature of the intake pipe is lower than the temperature of the evaporator	Obstruction of the circuit on the low pressure side	Replace the pipe
PRESSURE > 11 bars	PRESSURE > 12 bars	PRESSURE > 2,4 bars	Fluid line (Filter drier iced up)	Obstruction of the fluid line Filter drier blocked	Replace the pipe Replace : The filter drier

1.2. Check with tool

Check the air conditioning compressor (The recommended tools should be used).

N.B. : See instructions for use : Tooling .

1.3. Oil level check

ESSENTIAL : The compressor lubricant is extremely hygroscopic, use new fluid for any operation.

There are 3 different cases :

- Repairs to a system that has no leaks
- Slow leak
- Rapid leak

1.4. Work on the circuit (Without leak)

Use of filling and recycling equipment not fitted with an oil trap :

- Drain the low pressure fluid circuit as slowly as possible to prevent the compressor oil from being drawn out of th system
- The circuit is filled with refrigerant without the addition of oil

Use of filling and recycling equipment fitted with an oil trap :

- Drain the refrigerant circuit conforming to the instructions in the equipment's manual
- Measure the quantity of oil recovered
- Add the same quantity of oil as that recovered

1.5. Slow leak

Slight leaks do not cause losses of oil, apply the procedure described for repairs to a system without leaks.

1.6. Rapid leak

This type of incident can produce a loss of oil, as well as cause the circuit to breathe.
Perform the following operations :

- Replace the filtering and drying cartridge (If necessary)
- Evacuate the maximum amount of oil possible (when replacing the faulty component)
- Before or during the R134.a refrigerant refilling process, introduce 80 cc of new oil into the system

2. Air conditioning system check

Fit the tool in its place(Tools recommended in the Service documentation).
Perform the following operations :

- Close all the air vents
- Start the engine
- Open the front left vent
- Select the central and side air vents on the air conditioning control panel
- Position the air circulation control on "entry of exterior air"
- Set the A/C system to the maximum ventilation setting
- Reduce the temperature as much as possible
- Operate the air conditioning for 5 minutes

3. Interpretation of the values (reminder)

N.B. : Values relating to use of the diagnostic tool.

3.1. Undercooling (SR)

The under-cooling represents the difference between the condensation temperature and the refrigerant temperature at the air conditioning condenser outlet.
The under-cooling indicates the quantity of refrigerant (in liquid state) in the air conditioning circuit.

Undercooling (SR)	Causes	Solutions
Less than 2°C	Lack of refrigerant in the air conditioning condenser : Greater than 150 grammes	Add refrigerant; Using the charging station
Between 2°C and 4°C	Lack of refrigerant in the air conditioning condenser : Between approximately 100 and 150 grammes	
Between 4°C and 12°C	Correct charge	-

Higher than 12° C	Excess of refrigerant in the air conditioning condenser	Remove refrigerant; Using the charging station
Higher than 15° C		

3.2. Over-heating

The over-heating represents the difference between the refrigerant temperature at the evaporator outlet and the evaporation temperature.
The over-heating indicates the quantity of refrigerant (in gaseous state) in the air conditioning circuit.

Over-heating	Causes	Solutions
Between 2°C and 15°C	Correct charge	-
Higher than 15° C	Lack of refrigerant in the air conditioning circuit	Add refrigerant; Using the charging station
Less than 2°C	Excess refrigerant in the air conditioning circuit	Remove refrigerant; Using the charging station

3.3. Temperature of the blown air "u"

The temperature of the blown air should be between 2°C and 10°C.

4. Air conditioning circuit diagnostics table (as a guide)

Main failure	Symptom	Possible causes
The air conditioning compressor does not operate or stops quickly	The air conditioning compressor clutch does not engage or disengages quickly	Refrigeration compressor clutch
		Lack of refrigerant in the air conditioning circuit
		Air conditioning pressure switch
		Air conditioning evaporator sensor
		Electrical circuit (connectors, fuses,....)
	The air conditioning compressor clutch remains engaged and stops quickly	Ancillary drive belt
		air conditioning compressor
		Filtring and drying cartridge
		Cooling pressure relief valve
		Refrigerant leak
		Refrigeration compressor clutch
The air conditioning compressor makes an abnormal noise	The air conditioning compressor clutch remains engaged	Air conditioning compressor clutch setting incorrect
		Refrigerant fluid load
		Air conditioning compressor faulty
		Lack of refrigerant in the air conditioning circuit
		Air conditioning compressor valves faulty
	The air conditioning compressor clutch remains	Air conditioning compressor

	engaged and slips	clutch
		Ancillary drive belt
Abnormal pressure values	Low pressure and high pressure too high	Air conditioning pressure relief valve faulty
		Pipe clogged
	Low pressure too high and high pressure too low	Air conditioning compressor seal faulty
	Low pressure too low and high pressure too high	Air conditioning evaporator sensor faulty
		Air conditioning pressure relief valve jammed
		Filtering and drying cartridge blocked
		Pipe clogged
	Low pressure and high pressure too low	Pipe clogged
		Air conditioning pressure relief valve jammed
		Lack of refrigerant in the air conditioning circuit
		Air conditioning compressor faulty
	Low pressure normal and high pressure too high	Presence of air in the air conditioning circuit
	Low pressure normal and high pressure too low	Air conditioning pressure switch faulty
		Faulty evaporator sensor
	Low pressure too high and high pressure normal	Air conditioning pressure relief valve jammed open
	Low pressure too low and high pressure normal	Filtering and drying cartridge saturated or clogged
		Air conditioning pressure relief valve iced up
Operation of the air conditioning in down-grade mode	Under-cooling too low	Lack of refrigerant
	Under-cooling too high	Excess of refrigerant
		Presence of air in the air conditioning circuit
		Filtering and drying cartridge clogged

N.B. : In all cases, measure the over-heating and the blown air temperature.

REMOVING - REFITTING : EXTERNAL TEMPERATURE SENSOR

ESSENTIAL : Observe the safety and cleanliness recommendations .

1. Tooling

tool	Reference	Designation
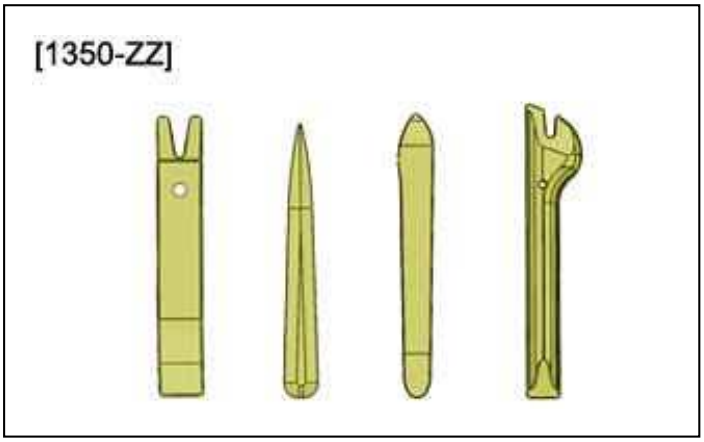 Figure : E5AG02MT	[1350-ZZ]	Stripping tools

2. Removing

Disconnect the ancillaries battery .

N.B. : Strip : The exterior mirror (according to equipment).

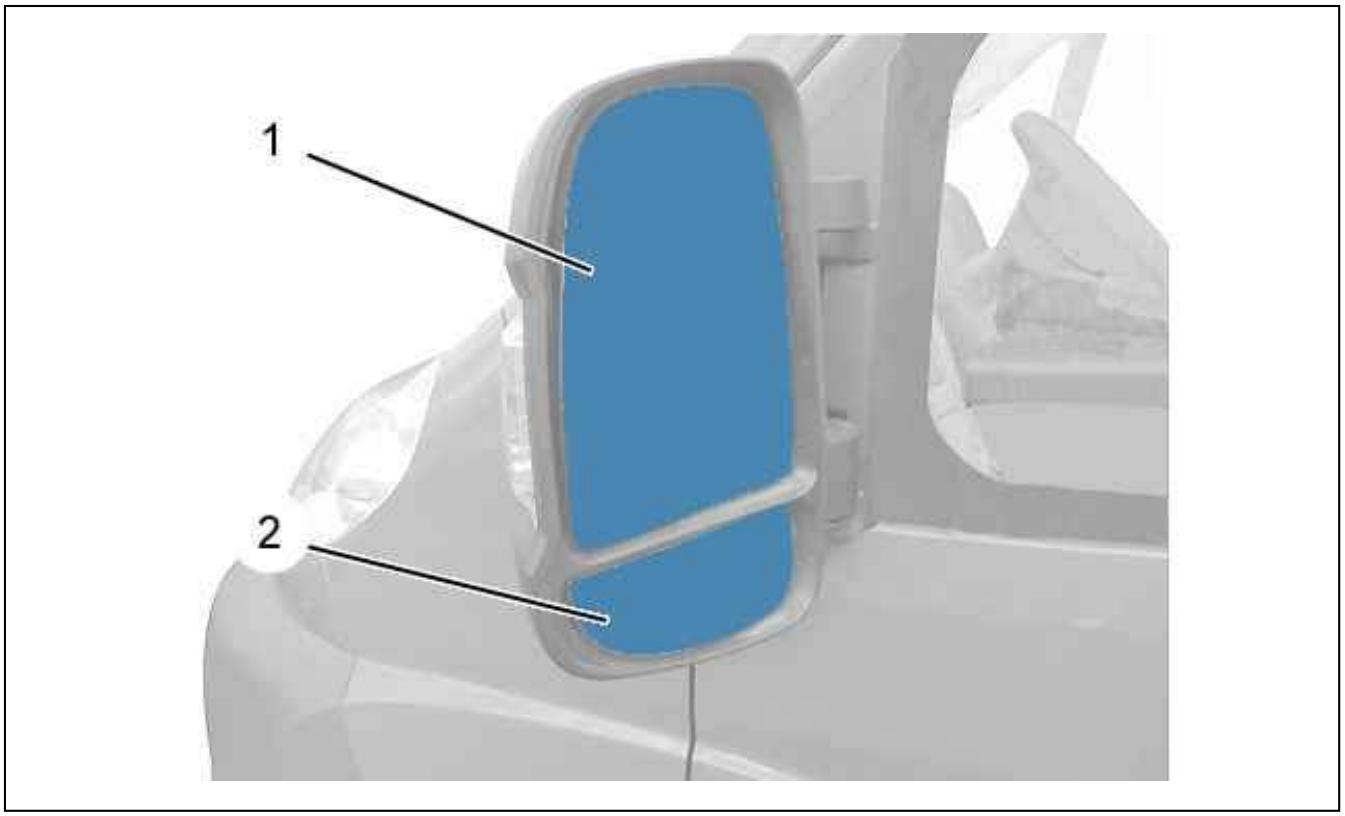

Figure : C5HG19XD

Unclip :

- The exterior mirror (1) upper glass ; Using tool [1350-ZZ]
- The exterior mirror (2) lower glass ; Using tool [1350-ZZ]

Remove :

- The exterior mirror (1) upper glass
- The exterior mirror (2) lower glass

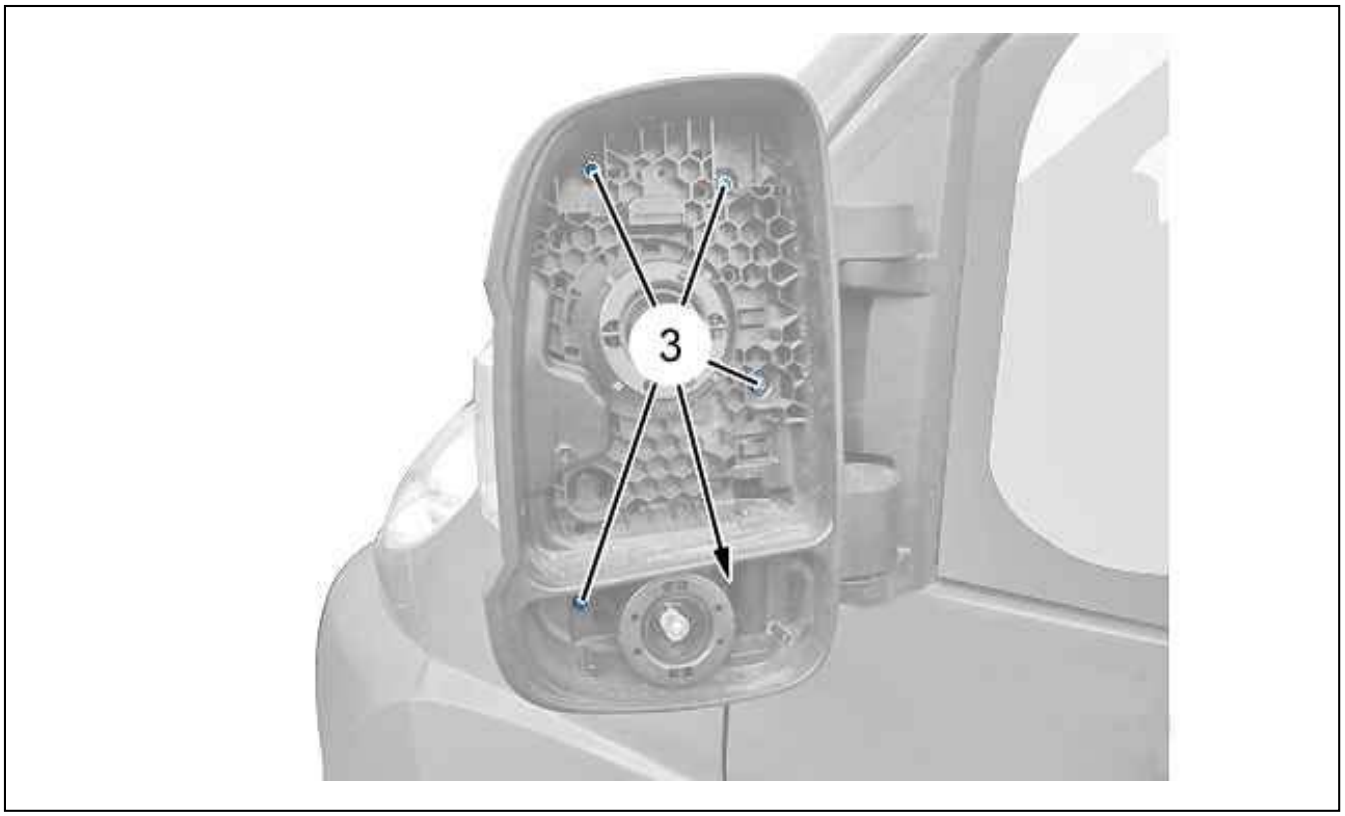

Figure : C5HG19YD

Remove the bolts (3).

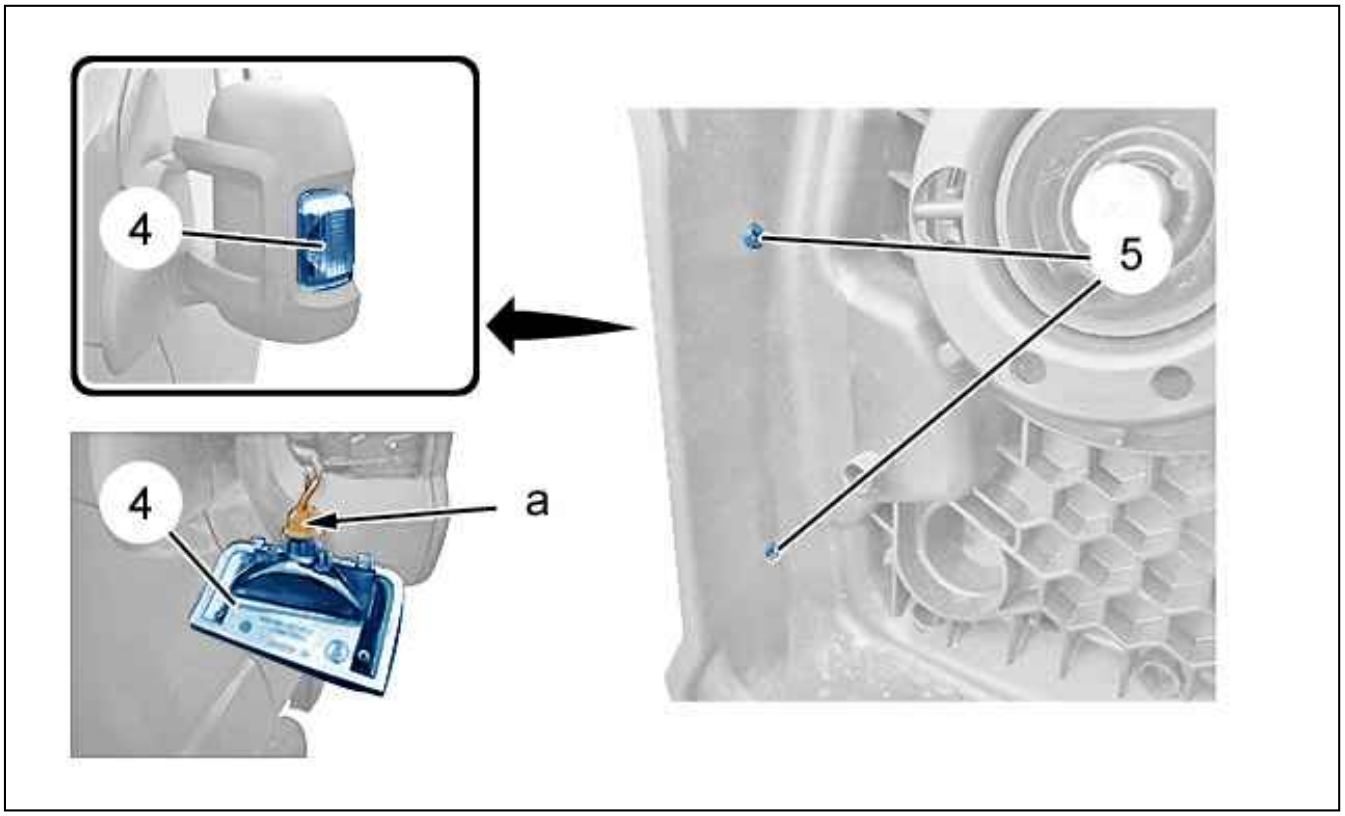

Figure : C5HG19ZD

Remove the bolts (5).
Detach the side repeater (4).

Disconnect the connector (at "a").
Remove the side repeater (4).

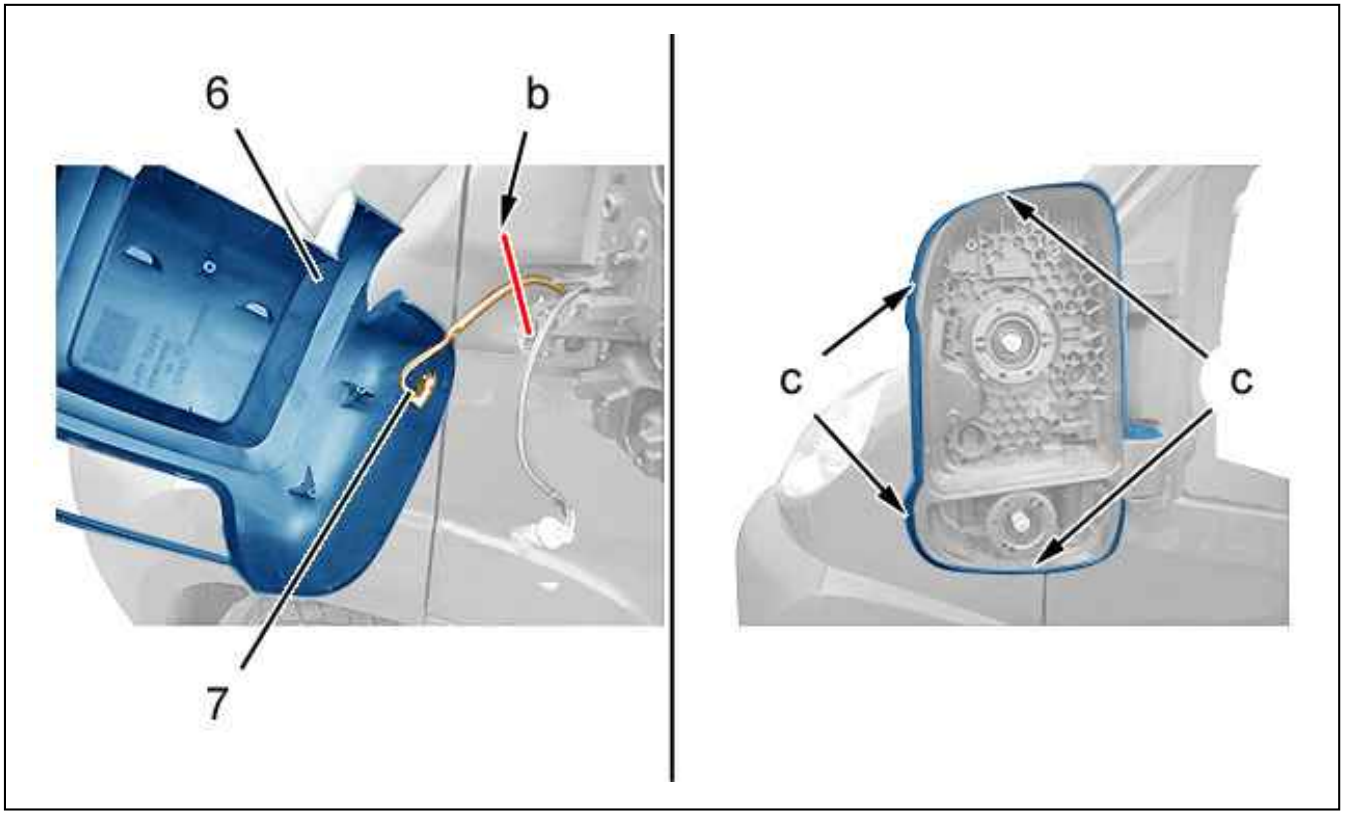

Figure : C5HG1A0D

Unclip the exterior shell (6) (at "c") ; Using tool [1350-ZZ].
Detach : The exterior shell (6).
Unclip : The exterior temperature sensor (7).
Remove : The exterior shell (6).

CAUTION : Leave a length of 40 mm to restore the electrical connection of the external temperature sensor (7) (a "b").

Cut the 2 black wires of the exterior temperature sensor (7) (at "b").
Remove the external temperature sensor (7).

3. Refitting

Restore the electrical connection of the exterior temperature sensor (7) using the welding sleeves (type RAYCHEM) then insulate using the heat-shrink sleeve .
Proceed in the reverse order to removal.

CAUTION : Perform the operations that are required following a reconnection of the ancillaries battery.

Reconnect the ancillaries battery.
Check that the external temperature sensor (7) is working.
Check that the electrical equipment is working correctly.

REMOVING - REFITTING : AIR CONDITIONING COMPRESSOR

ESSENTIAL : Observe the safety and cleanliness recommendations .

ESSENTIAL : Before carrying out any work on the air conditioning circuit, take the necessary precautions .

CAUTION : Do not remove the pipe plugs, clamps or unions until carrying out the connection to vehicle.

1. Tooling

Equipment : Filling and recycling equipment .

tool	Reference	Designation
 Figure : E5AD00ZT	[1701-HZ]	Air conditioning circuit protection plugs

2. Removing

Lift and support the vehicle.
Disconnect the battery.
Drain the air conditioning system ; Using the charging station .
Remove the under engine protection .
Remove the accessories drive belt .

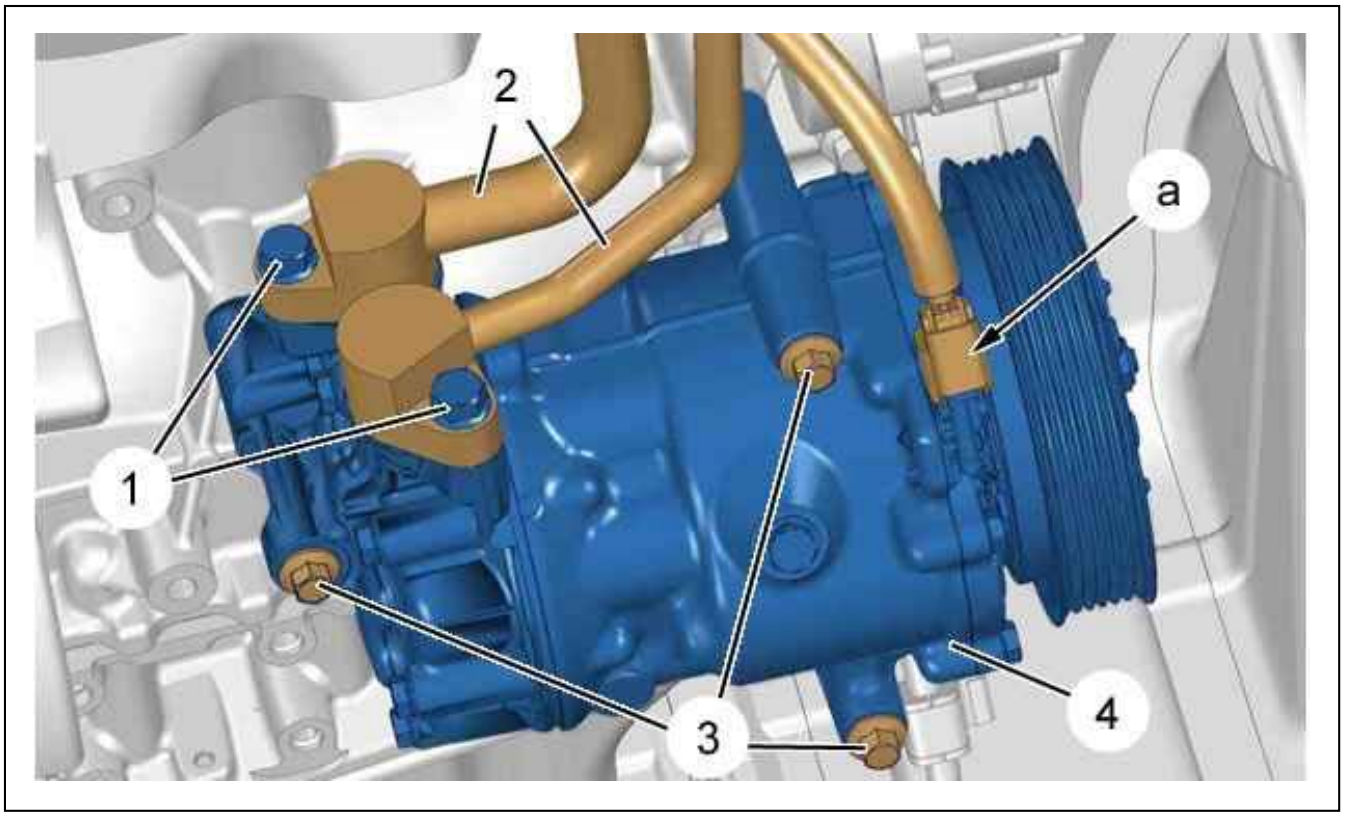

Figure : C5HG1BCD

Disconnect the connector (at "a").
Remove the 2 bolts (1).

CAUTION : Plug all the piping quickly to prevent the entry of moisture ; Using tool [1701-HZ].

Uncouple the refrigerant ducts (2).
Remove :

- The 3 air-conditioning compressor fixing bolts (3)
- The air-conditioning compressor (4)

CAUTION : Drain the compressor oil ; Measure the quantity of oil recovered.

3. Refitting

CAUTION : Observe the tightening torque values .

CAUTION : Never fit an air-conditioning compressor that has suffered an impact.

CAUTION : Check the cleanliness of the ducts up and downstream of the air conditioning compressor.

CAUTION : Put in place new O-ring seal ; Oil the seals with air conditioning compressor oil.

CAUTION : Drain the new compressor ; Put in the quantity of oil measured at removal.

Refit :

- The air-conditioning compressor (4)

- The 3 air-conditioning compressor fixing bolts (3)

Couple up the refrigerant ducts (2) (Fit new O-ring seals).

CAUTION : The flange for the air conditioning ducts has to be up against its interface prior to tightening of the bolts (1).

Refit the 2 bolts (1).
Connect the connector (at "a").
Refit the ancillary belt .
Using the charging station :

- Vacuum drain the air conditioning system (For 15 minutes minimum)
- Check the sealing (Refrigeration system)

Refit the under-engine protection .
Using the charging station :

- Vacuum drain the air conditioning system (For 35 minutes minimum)
- Charge the air conditioning circuit

Return the vehicle to its wheels.

CAUTION : Perform the operations to be carried out following reconnection of the battery.

Reconnect the battery.

CAUTION : The first time the air conditioning compressor is started, do not exceed 1500 rpm for the first minute in order to distribute the oil in the air conditioning circuit.

Check the operation of the air conditioning .

REMOVING - REFITTING : POLLEN FILTER

ESSENTIAL : Observe the safety and cleanliness recommendations .

1. Tooling

Tool	Reference	Designation
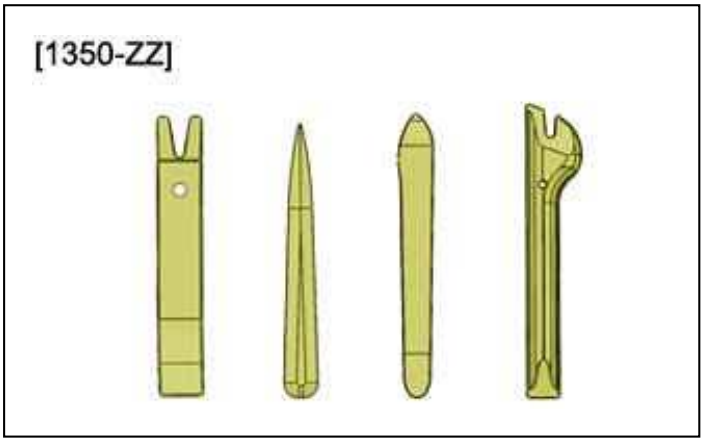 Figure : E5AG02MT	[1350-ZZ]	Stripping tools

2. Removing

Open the storage compartment of the central console.



Figure : C5HG1HID

Remove the bolts (2).
Release the storage compartment bracket from the central console (1).
Tilt the storage compartment of the central console (3).

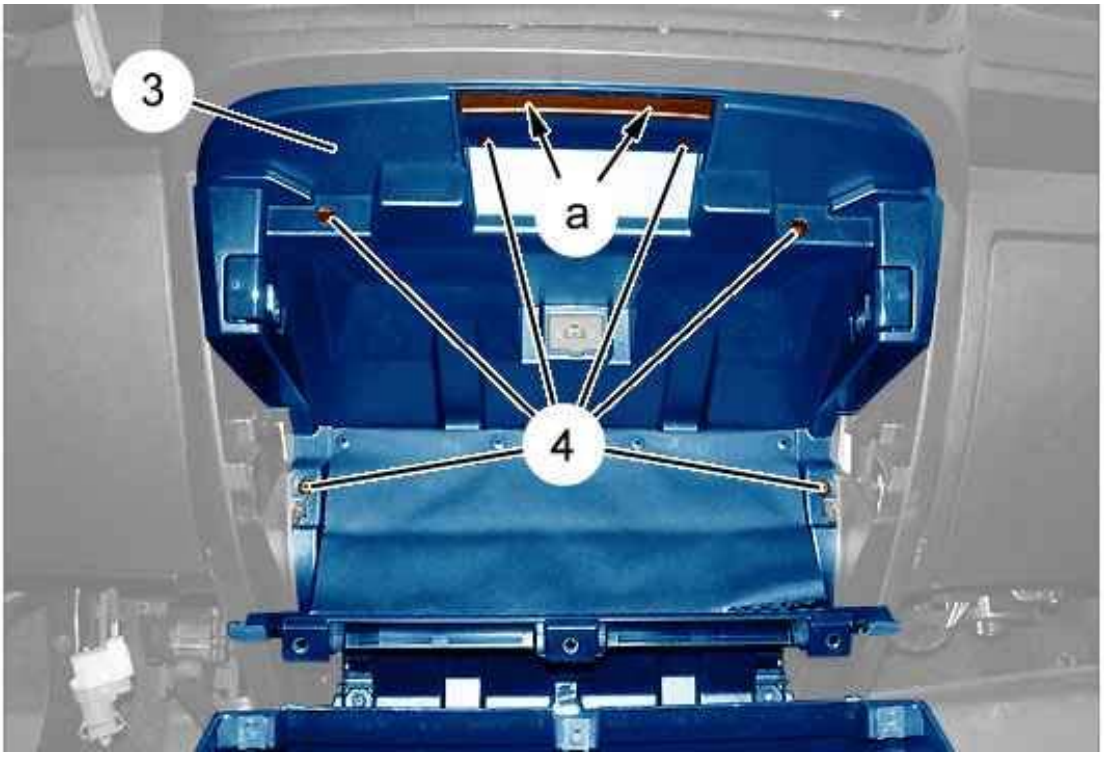

Figure : C5HG1HJD

Remove the bolts (4).
Unclip the front glove compartment from the central console (3) (at "a") ; Using tool [1350-ZZ].
Remove the glove compartment from the central console (3).

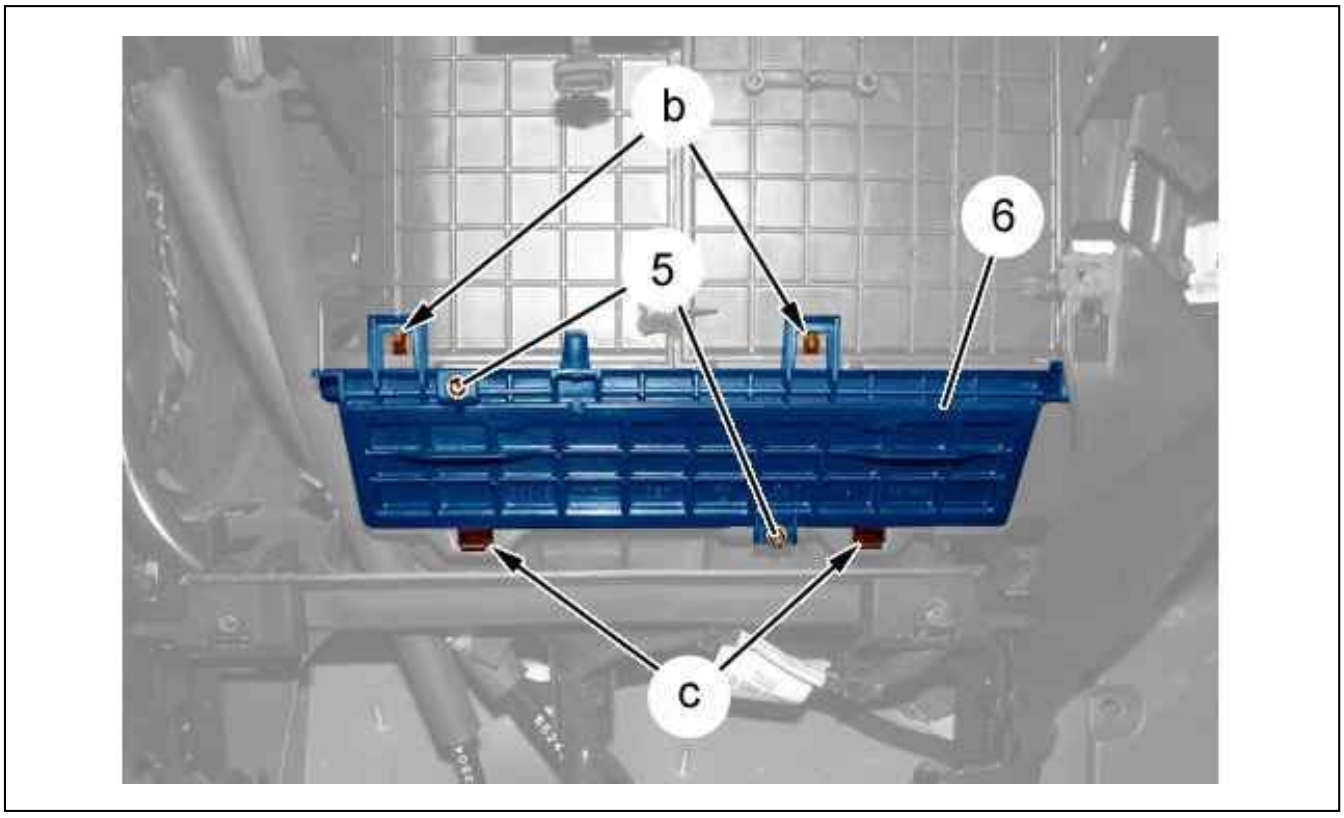

Figure : C5HG1HKD

Remove the bolts (5).
Detach the cover (6) (At "b" then at "c") ; Using tool [1350-ZZ].
Remove the cover (6).

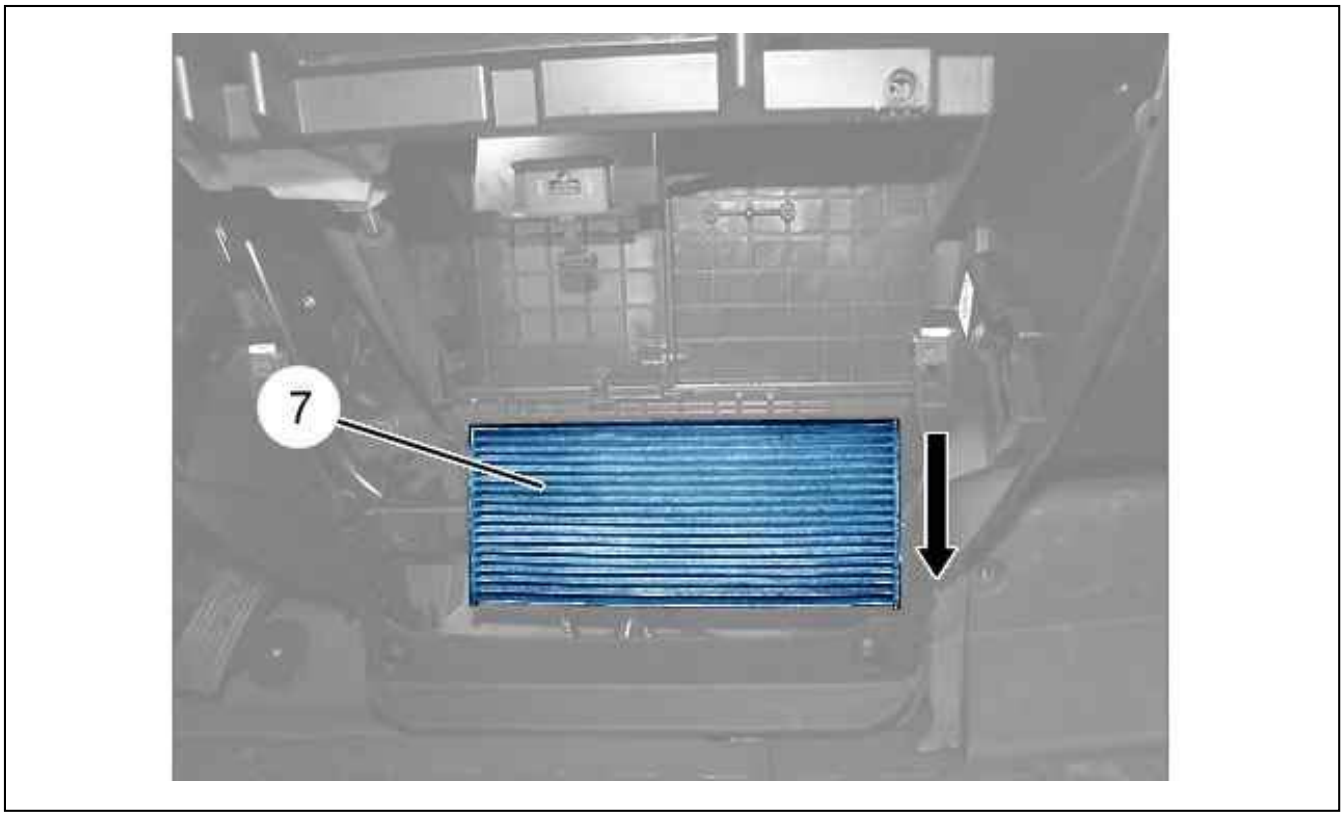

Figure : C5HG1HLD

Remove the pollen filter (7) (In the direction of the arrow).

3. Refitting

Clean the pollen filter housing (7).
Fit a new pollen filter (7).
Refit the cover (6).
Check the air flow of the air blower by operating it at different speeds.
Proceed in the reverse order to removal.
Check all the equipment works.

REMOVING - REFITTING : AIR BLOWER

1. Removing

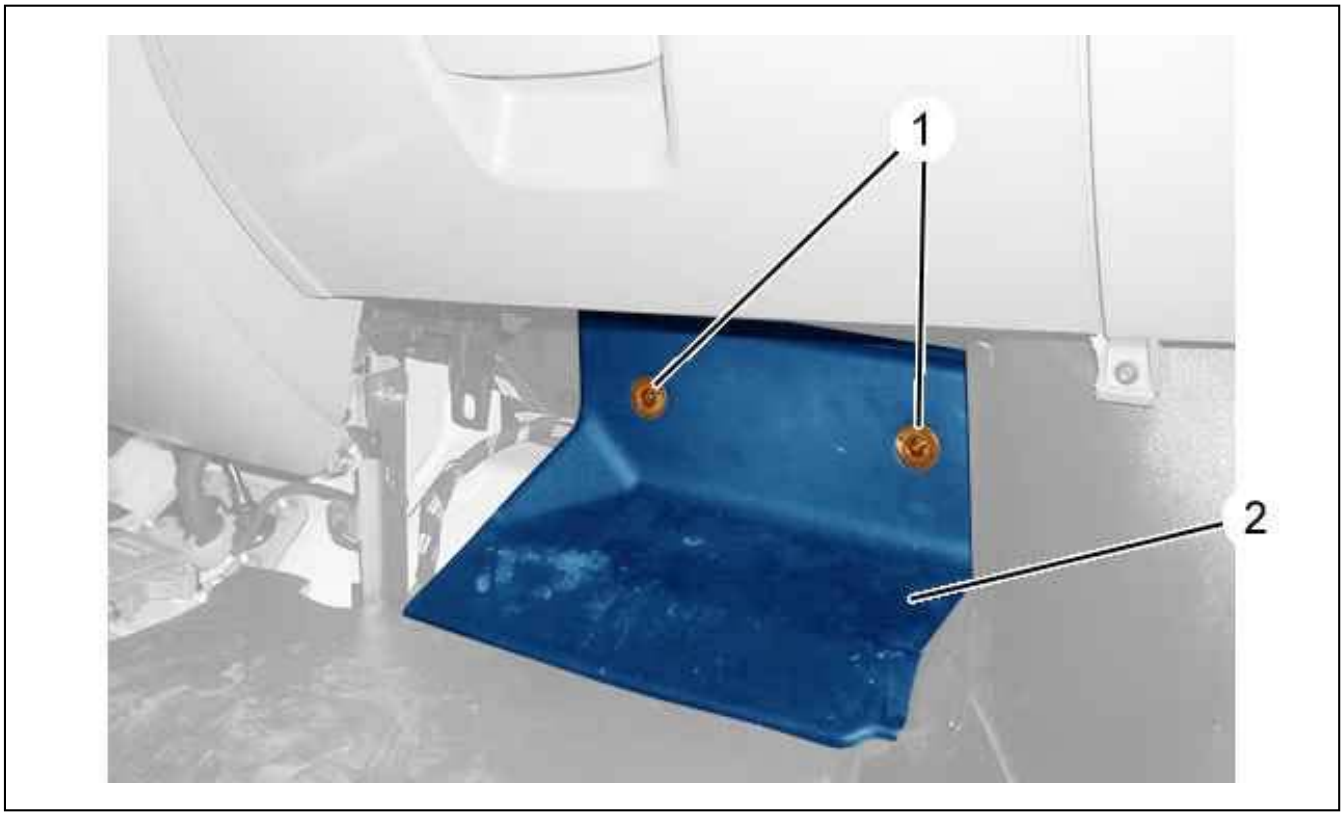

Figure : C5FP0XUD

Remove :

- The clips (1)
- The trim (2)

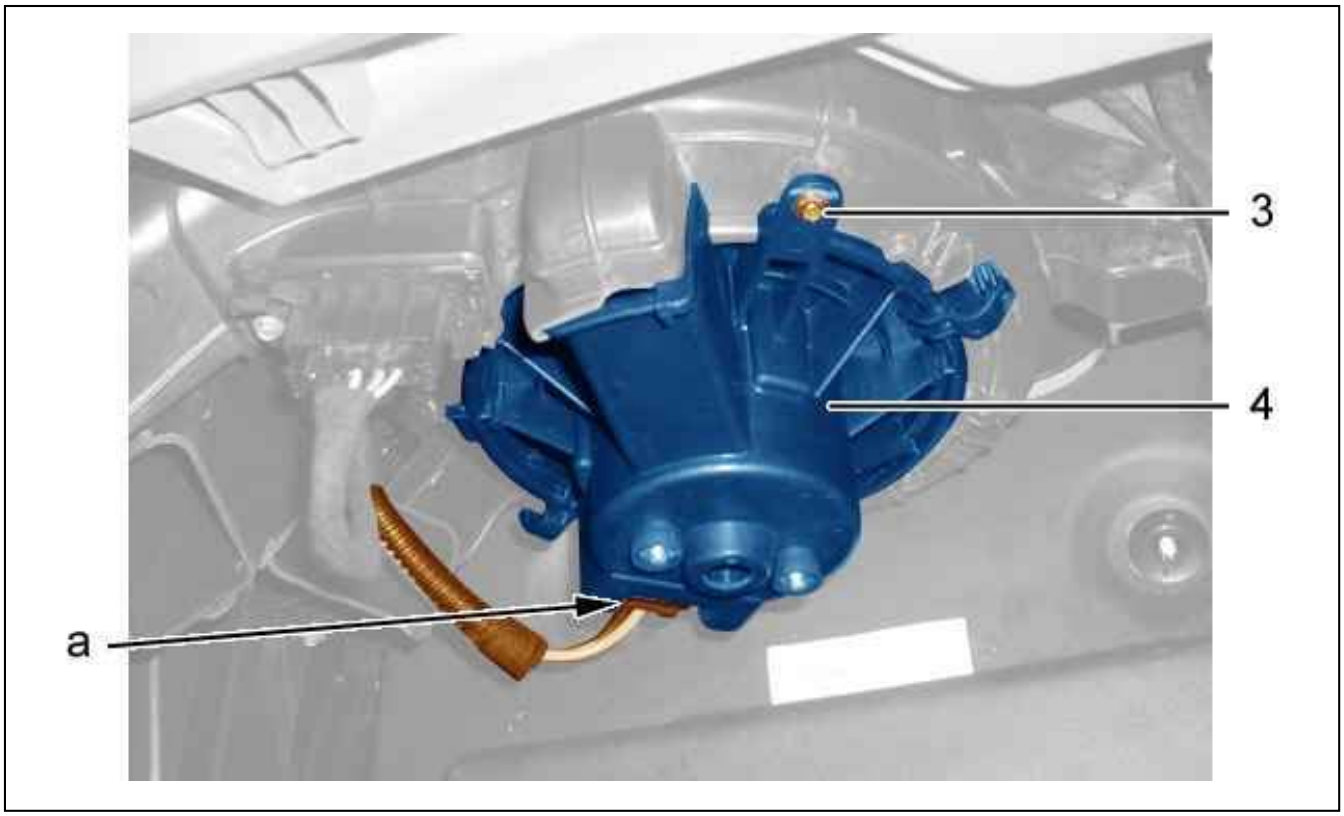

Figure : C5HP1FTD

Remove bolts (3).
Disconnect the air blower connector (at "a").
Turn the air blower (4) clockwise to disengage it from its retaining lugs.
Remove the air blower (4) (from underneath).

2. Refitting

Refit the air blower (4).
Reconnect the air blower connector (at "a").
Check the operation of the air blower.
Refit the various components in the reverse order to removal.

REMOVING - REFITTING : AIR BLOWER SPEED CONTROL COMPONENT

1. Removing

N.B. : The air blower speed resistor is located under the passenger storage compartment.



Figure : C5HP1FQD

Remove bolts (1).
Disconnect the connector (at "a").
Remove the air blower speed resistor (2).

2. Refitting

Refit the air blower speed resistor (2).
Reconnect the connector (at "a").
Check the operation of the air blower.
Refit the various components in the reverse order to removal.

REMOVING - REFITTING : AIR CONDITIONING FLUID PIPES

ESSENTIAL : Before carrying out any work on the air conditioning circuit, take the necessary precautions.

N.B. : Do not remove the pipe plugs, clamps or unions until carrying out the connection to vehicle.

1. Recommended tools

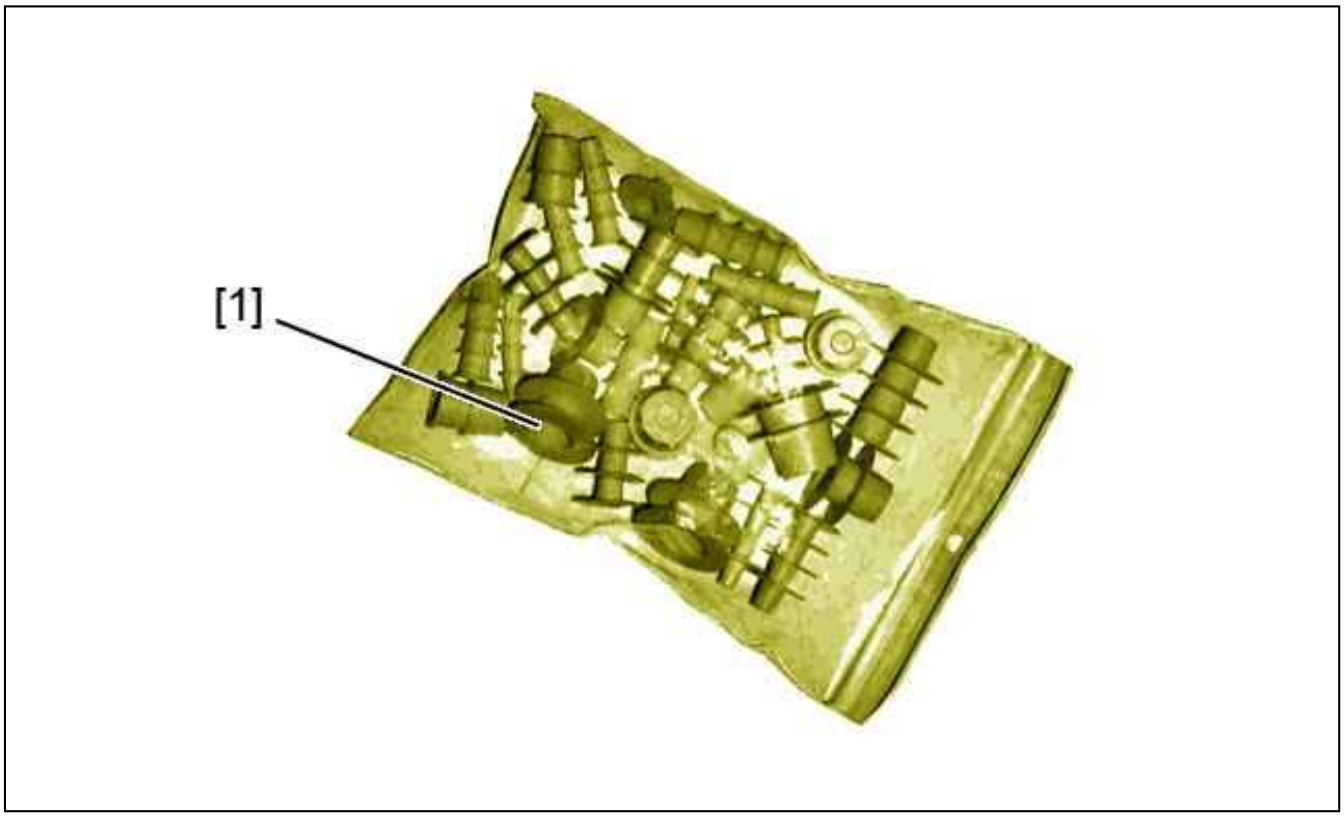

Figure : E5AP2ZLD

[1] air conditioning protection blanks (-).1701.HZ.

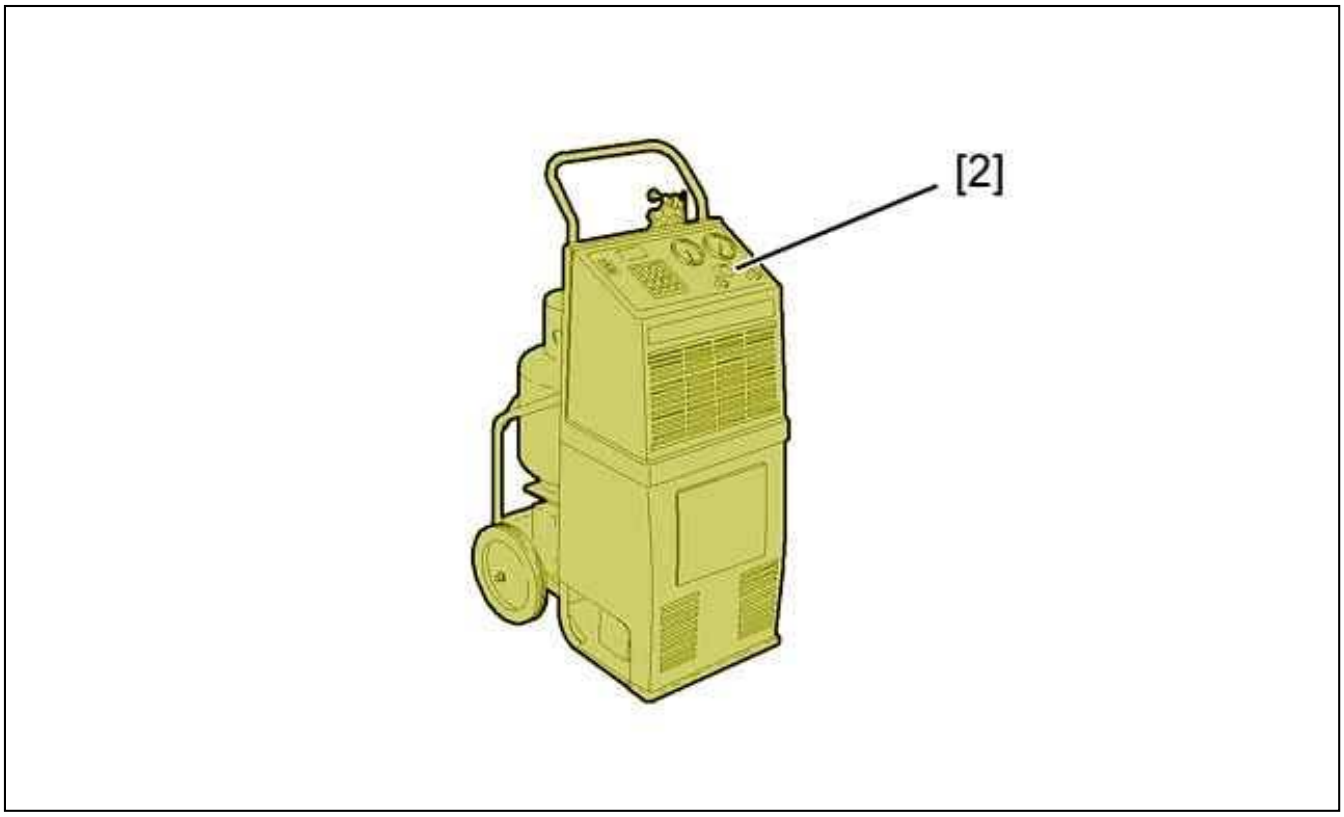

Figure : E5AP2WVD

[2] Filling and recycling equipment .

2. Preliminary operations

Drain the air conditioning circuit (R134a) ; Using the charging station [2].
Remove :

- The front right wheel
- The front right mud guard (see the relevant operation)

3. Removing

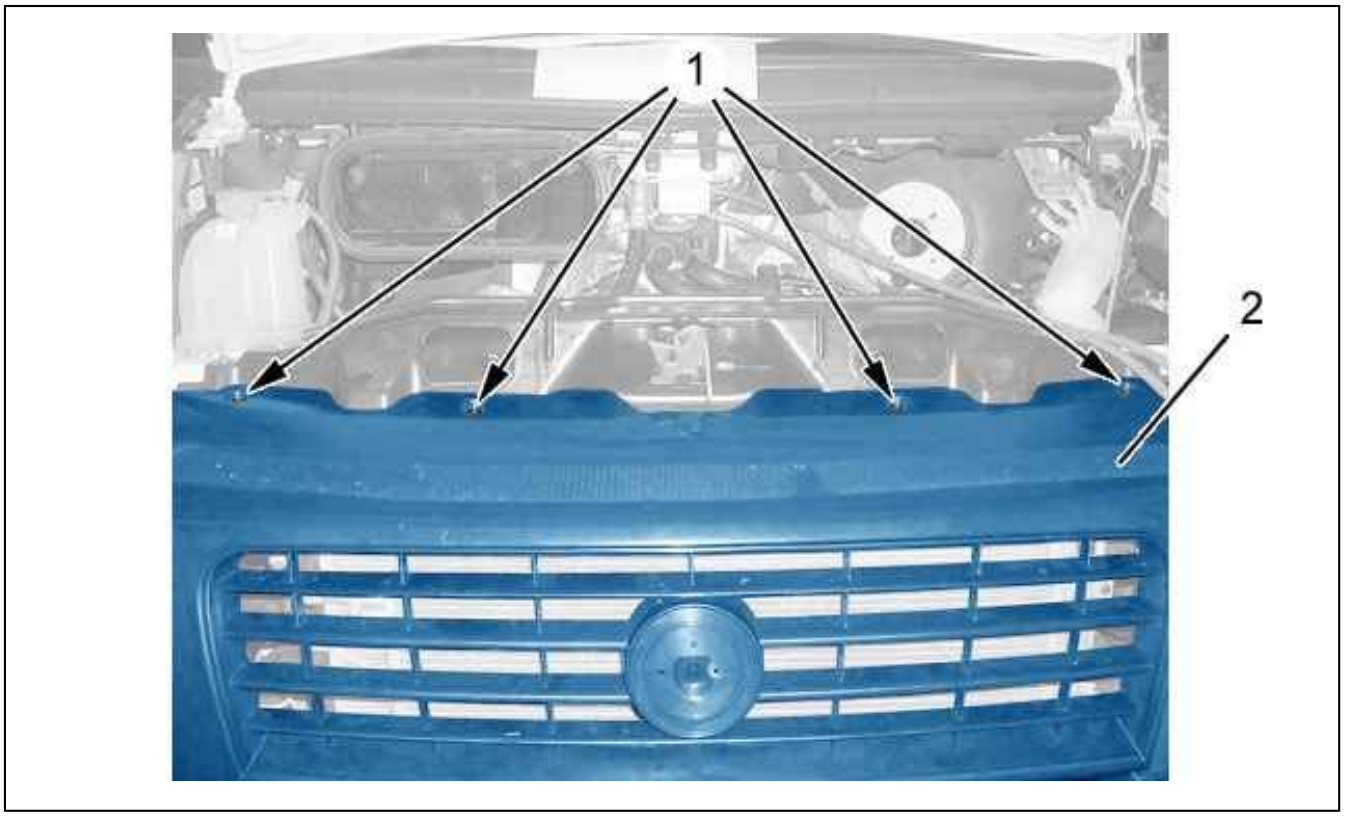

Figure : C4AP1M8D

Remove :

- The bolts (1)
- The upper central bumper (2) (see the relevant operation)

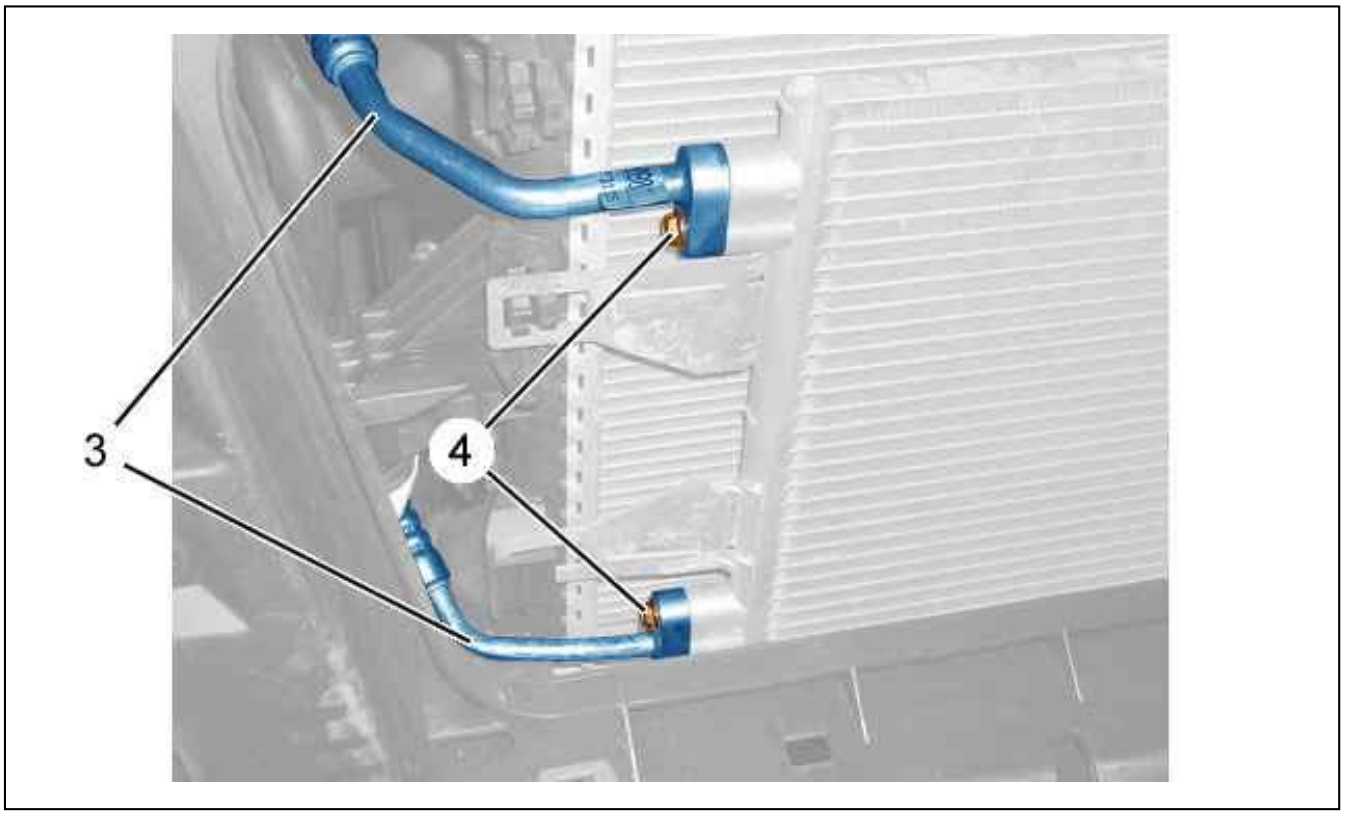

Figure : B1GP0EFD

Remove the bolts (4).
Uncouple the air conditioning pipes (3) perpendicular to the air conditioning condenser.

ESSENTIAL : Quickly plug all the pipes and the condenser to prevent the introduction of humidity ; Using the tools [1].

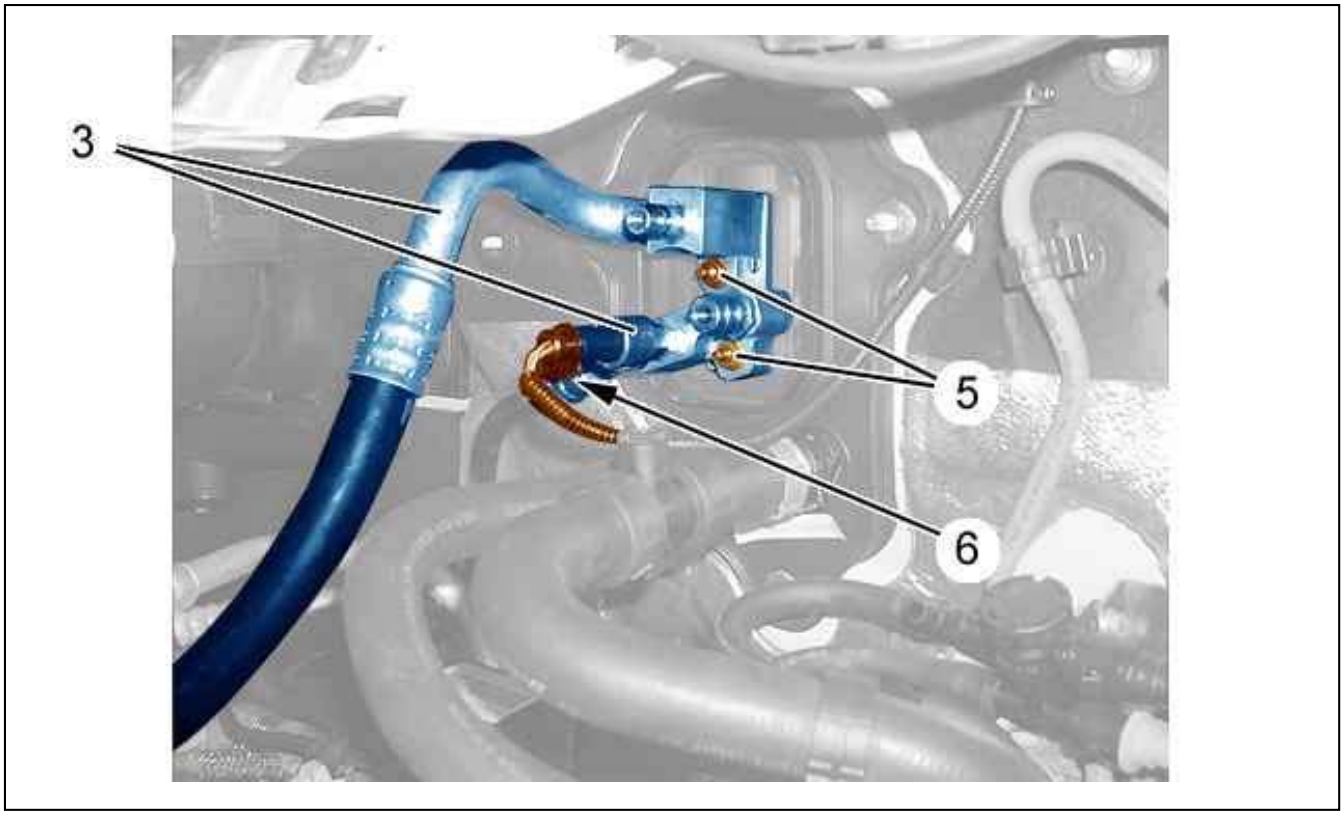

Figure : C5HP1FWD

Disconnect the pressostat (6).
Remove the nuts (5).
Uncouple the air conditioning pipes (3) perpendicular to the air conditioning pressure reducer.

ESSENTIAL : Plug all of the pipes and the pressure reducer quickly to prevent the entry of humidity ; Using the tools [1].

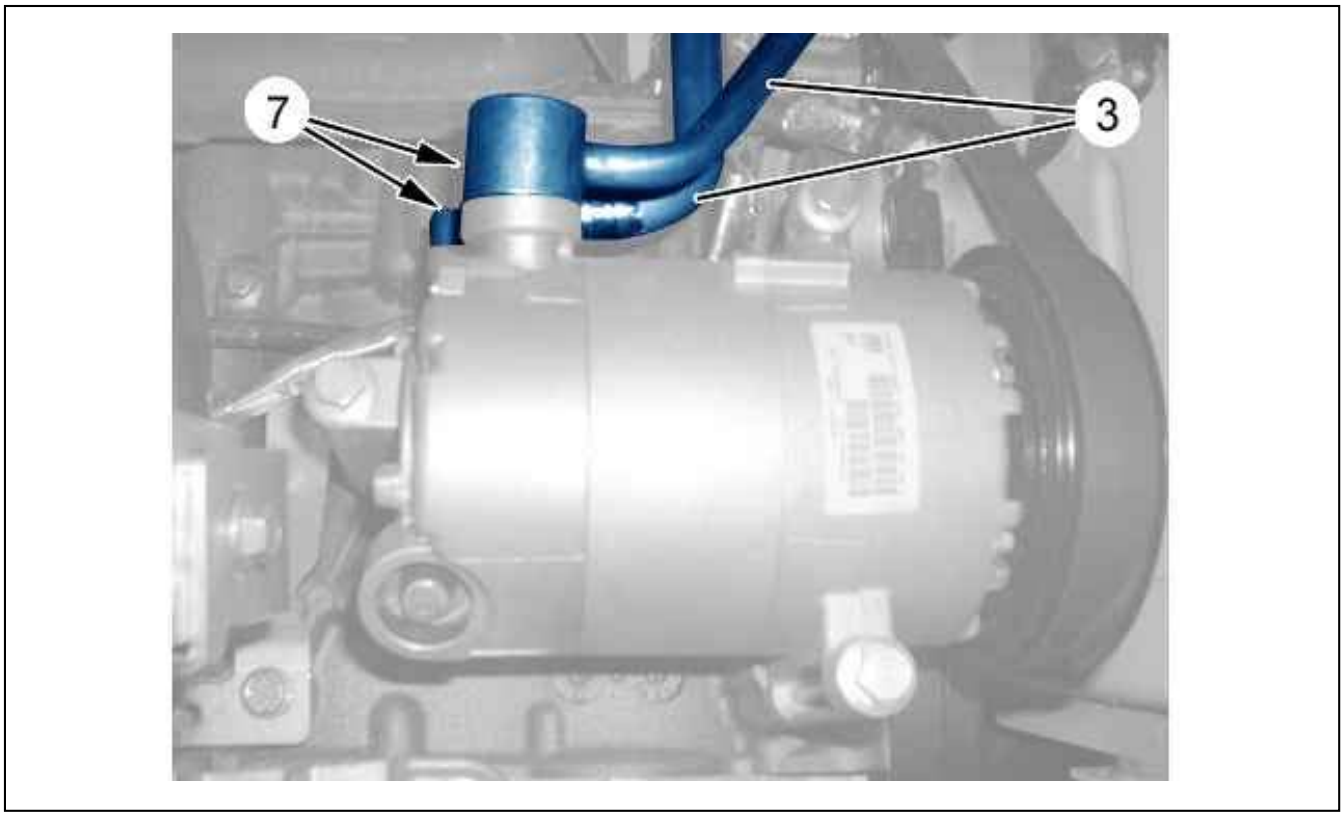

Figure : C5HP1FXD

Remove the bolts (7).
Uncouple the air conditioning pipes (3) perpendicular to the air conditioning compressor.

ESSENTIAL : Plug all of the pipes and the compressor quickly to prevent the entry of humidity ; Using the tools [1].

Remove the air conditioning pipes retaining clip (between the engine and the bulkhead).

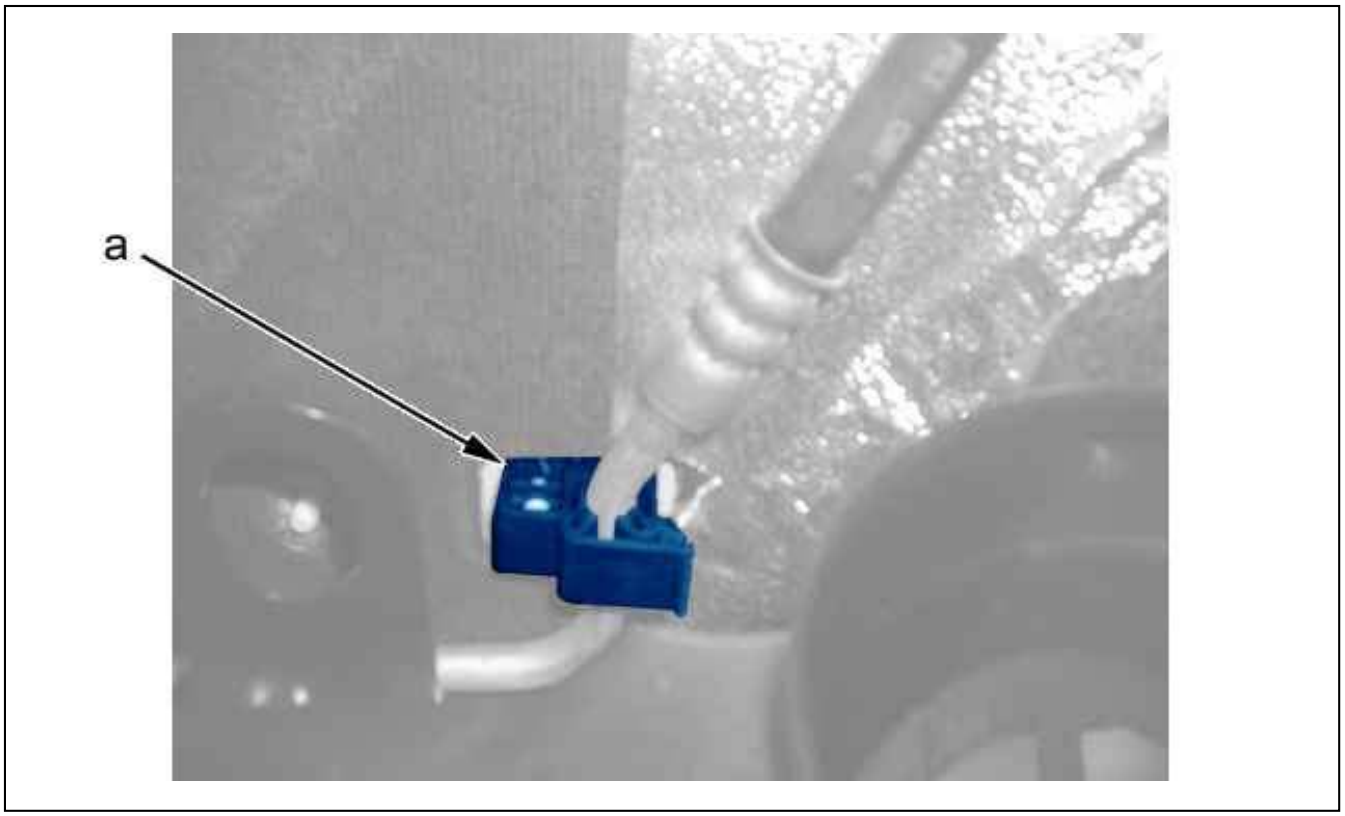

Figure : C5HP1FYD

Unclip the pipe (at "a").

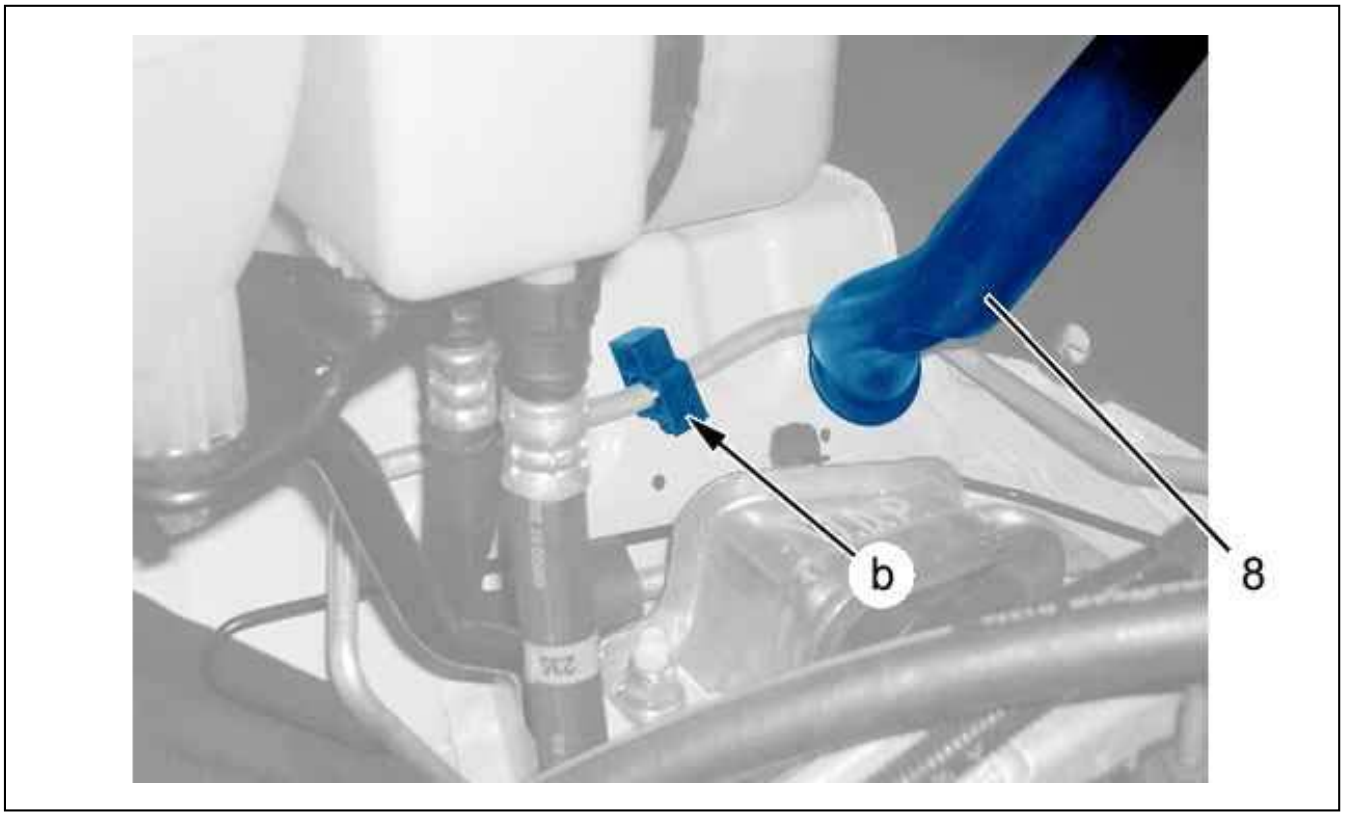

Figure : C5HP1FZD

Unclip the pipe (at "b").
Detach the water discharge pipe (8).

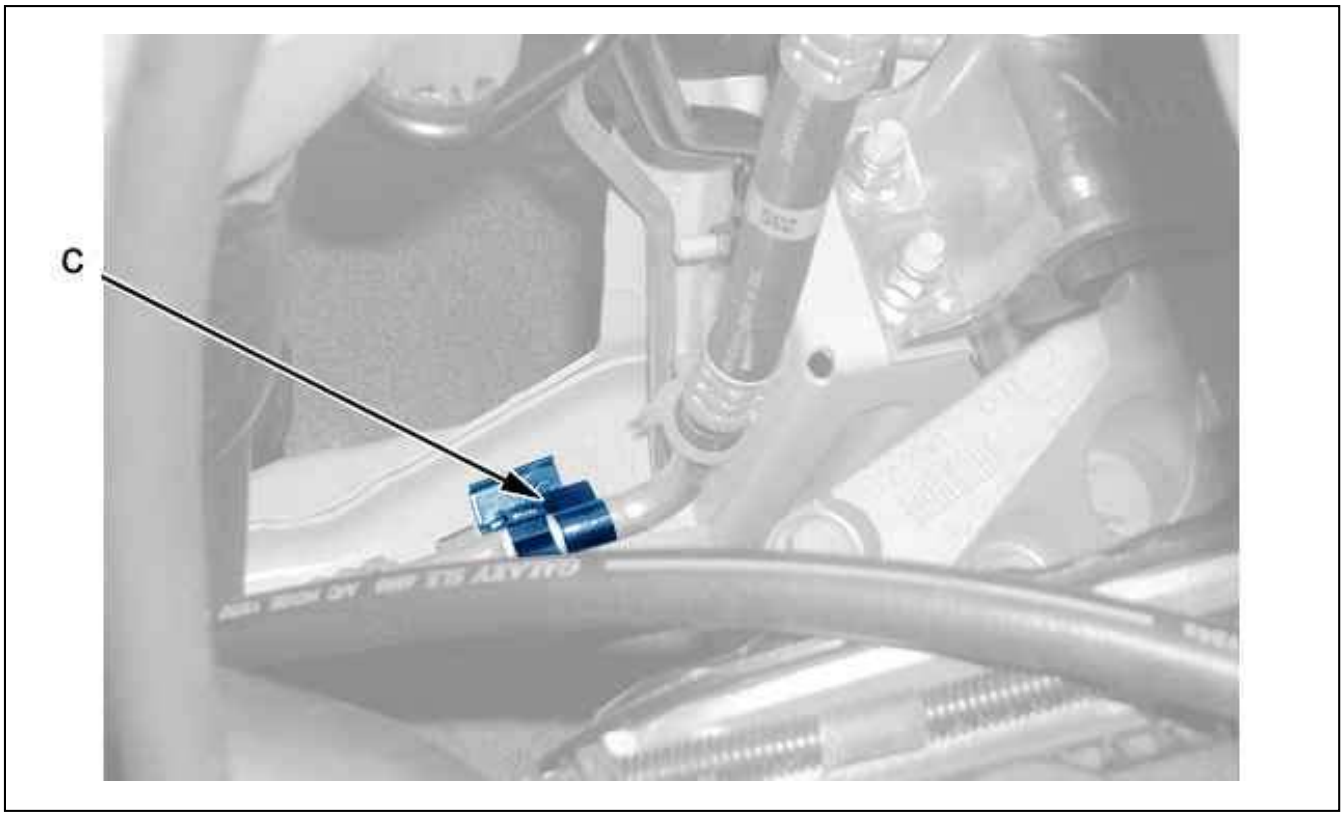

Figure : C5HP1G0D

Unclip the pipe (at "c").
Remove (in sequence) :

- The compressor / pressure reducer low pressure air conditioning pipe
- The compressor / condenser high pressure air conditioning pipe
- The condenser / pressure reducer high pressure air conditioning pipe (By the wheel arch)

4. Refitting

CAUTION : Fit new O-ring seals . Lubricate the new seals with compressor oil.

Check that the air conditioning pipes (3) are clean.
Refit and couple (in sequence) :

- The condenser / pressure reducer high pressure air conditioning pipe (By the wheel arch)
- The compressor / condenser high pressure air conditioning pipe
- The compressor / pressure reducer low pressure air conditioning pipe

Refit the water discharge pipe (8).
Clip the pipes (at "a", "b" and "c").
Refit the air conditioning pipes retaining clip (between the engine and the bulkhead).

ESSENTIAL : The air conditioning pipes clamp must be in contact with its interface before the nuts are tightened.

Refit :

- The bolts (7)
- The bolts (5)
- The nuts (4)

ESSENTIAL : Adhere to the tightening torques.

Carry out :

- Vacuum extraction of the air conditioning circuit (for a maximum of 15 minutes)
- Sealing test of the air conditioning circuit

Refit :

- The upper central bumper (2)
- The bolts (1)
- The front right mud guard (see the relevant operation)
- The front right wheel

Carry out :

- Vacuum extraction of the air conditioning circuit (for a maximum of 35 minutes)
- Charging of the air conditioning circuit

N.B. : When replacing air conditioning pipes, add 5 cm3 of air conditioning compressor oil per pipe replaced.

Check the functioning of the air conditioning.

REMOVING - REFITTING : HEATER MATRIX

CAUTION : From end 02/2011, for an exchange of heater matrix ; Be prepared to replace the heater unit.

ESSENTIAL : Observe the safety and cleanliness recommendations .

1. Preliminary operations

Disconnect the ancillaries battery.
Remove the heater unit .

2. Removing

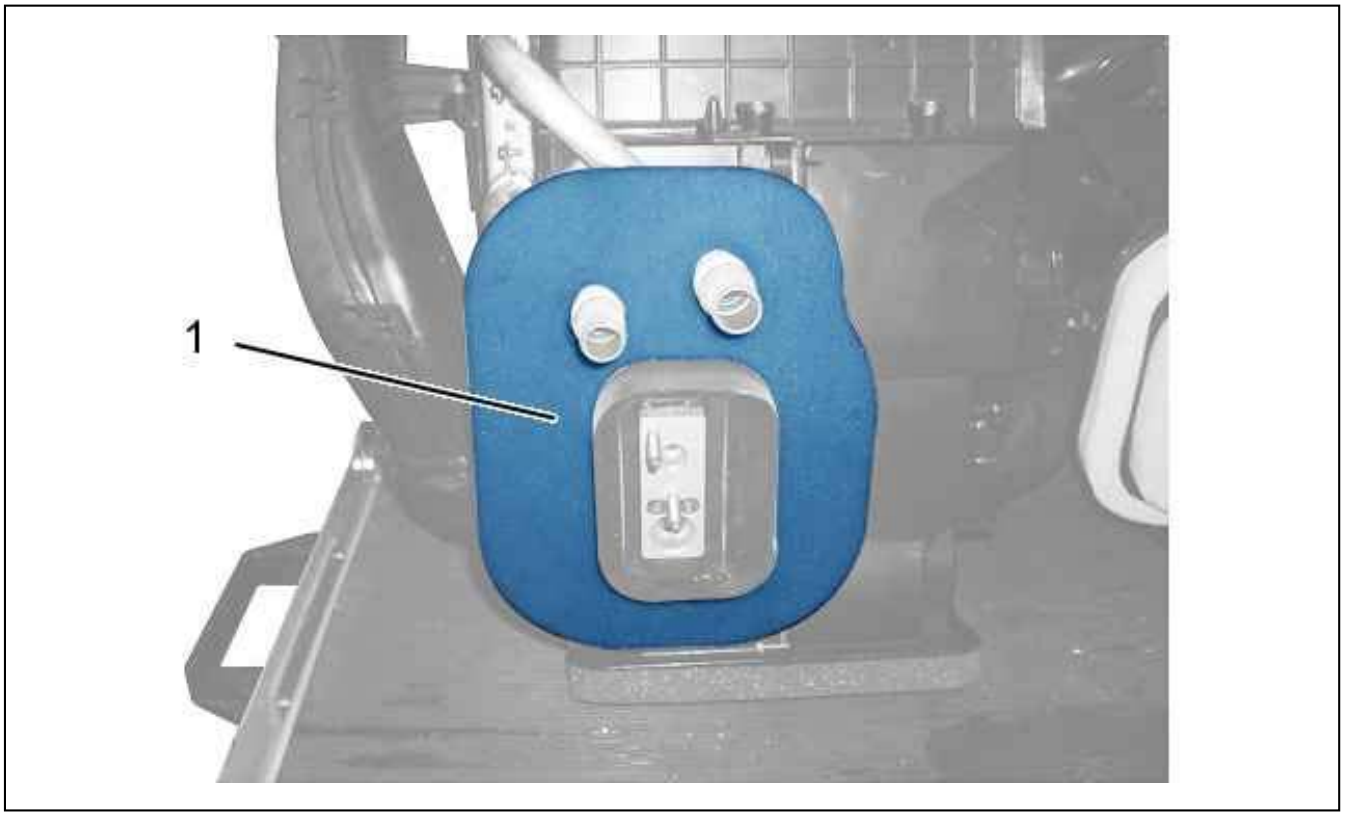

Figure : C5HP1GED

Remove the insulating foam (1).

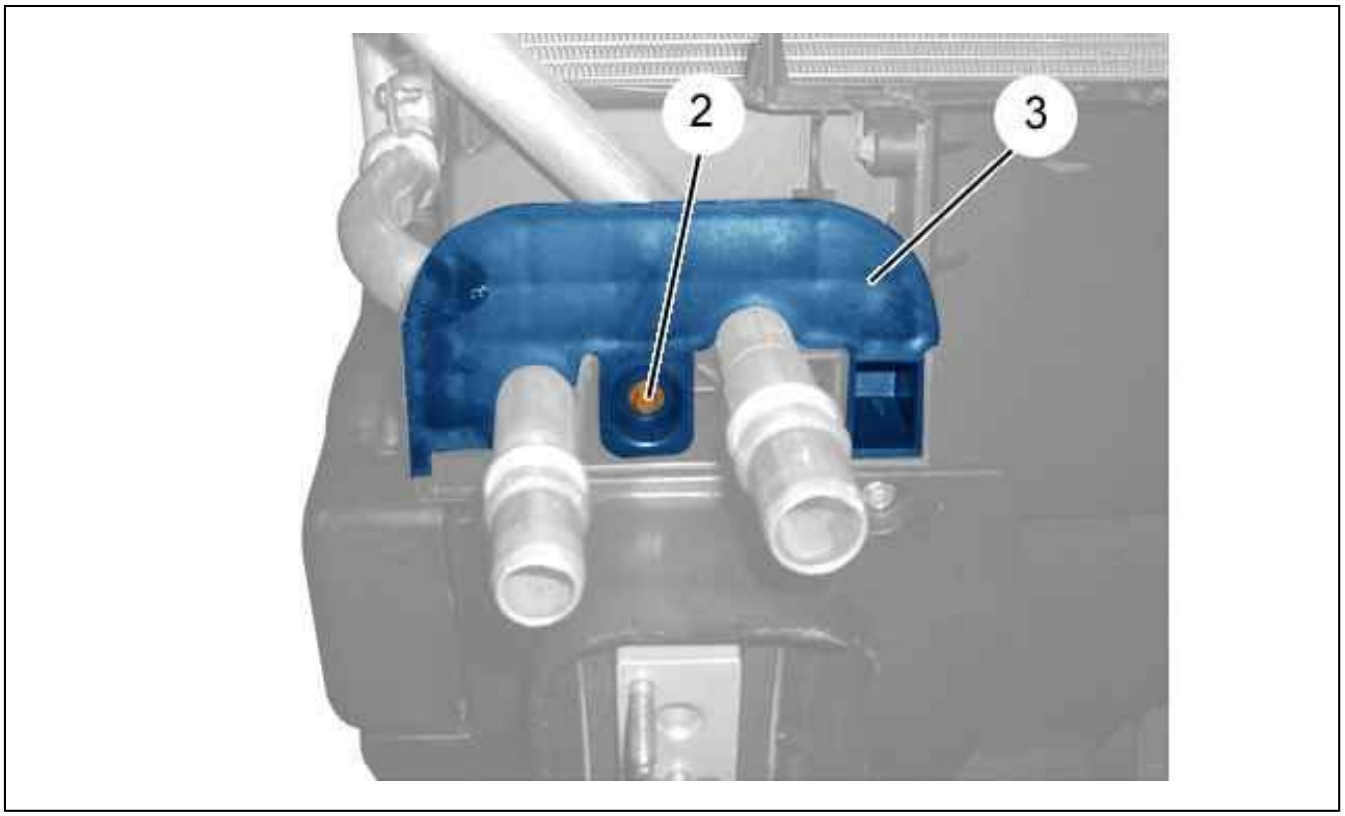

Figure : C5HP1GFD

Remove :

- The (2) bolt
- The fixing flange (3) for the heating ducts

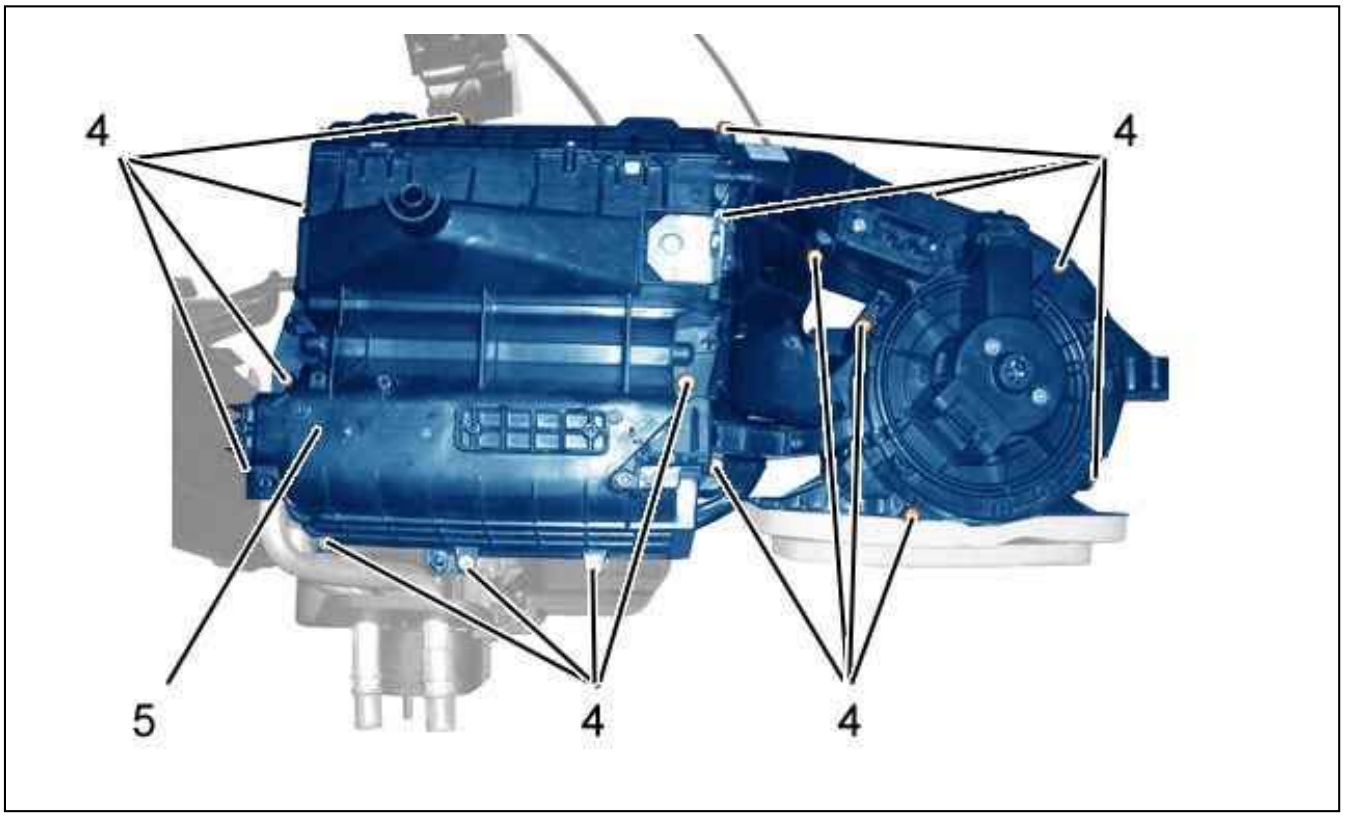

Figure : C5HP1GGD

Remove :

- The bolts (4)
- The bottom part of the heater matrix (5)

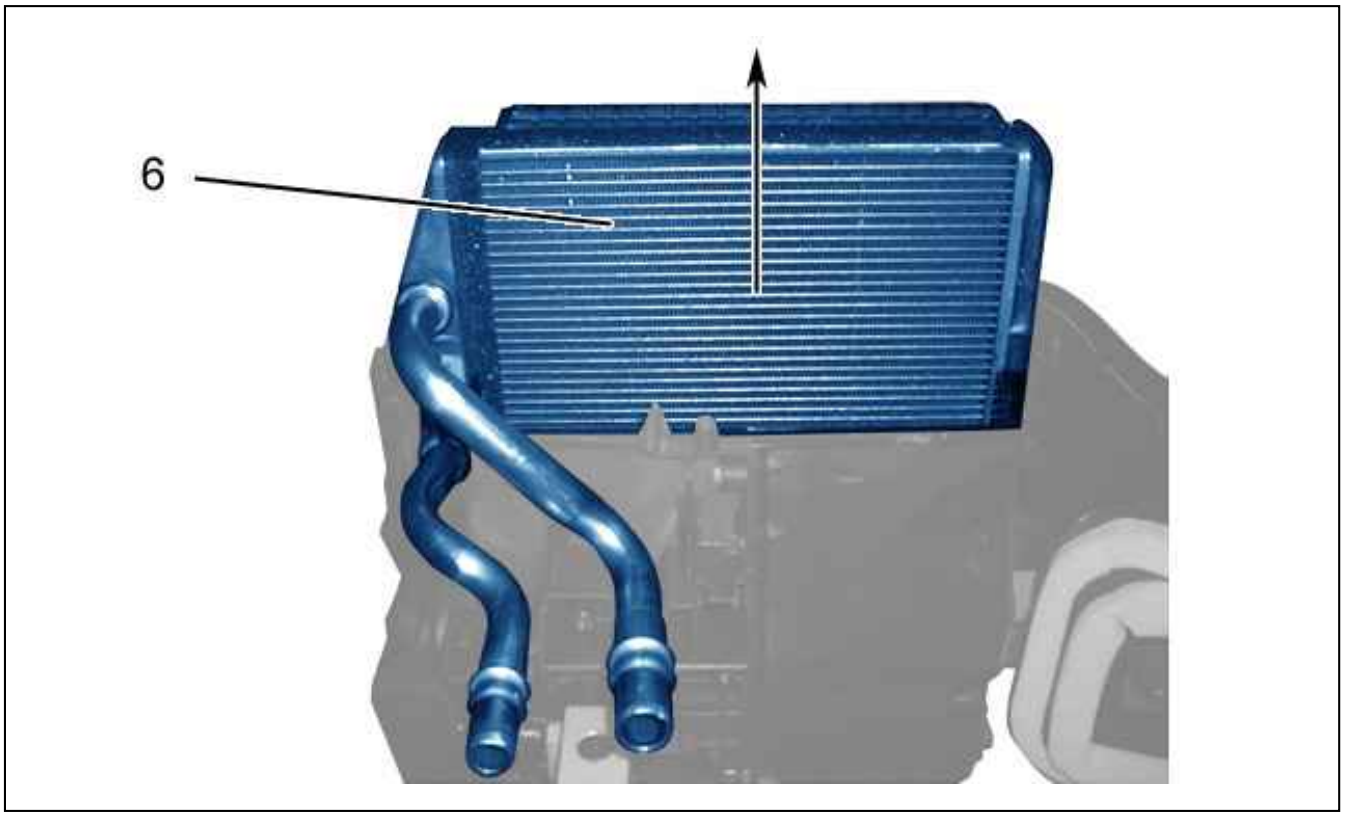

Figure : C5HP1GHD

Remove the heater matrix (6) (following the arrow).

3. Refitting

Refit :

- The matrix (6)
- The bottom part of the heater matrix (5)
- The bolts (4)
- The fixing flange (3) for the heating ducts
- The (2) bolt
- The insulating foam (1)
- The heater unit

Check the operation of the heat exchanger.

REMOVING - REFITTING : STEERING WHEEL CONTROLS

ESSENTIAL : Observe the safety and cleanliness recommendations.

1. Removing

Disconnect the battery.
Put the wheels in the straight ahead position.
Push back the steering wheel as far as it will go.
Remove the steering wheel (see the relevant operation).



Figure : C5FP0YPD

Remove lower panel (1) (see the relevant operation).

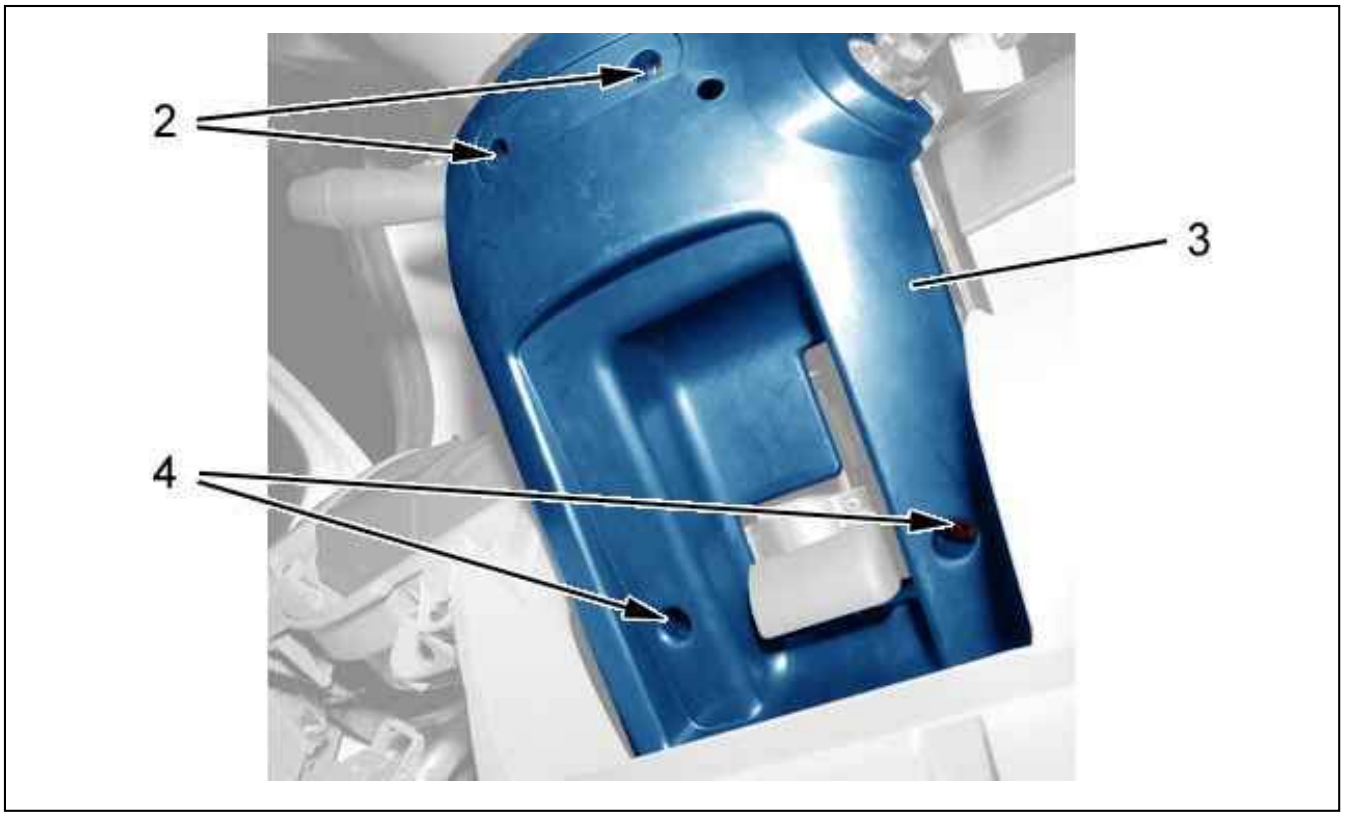

Figure : C5FP0YQD

Remove :

- The screws (2) and (4)
- The lower trim on the steering column (3)

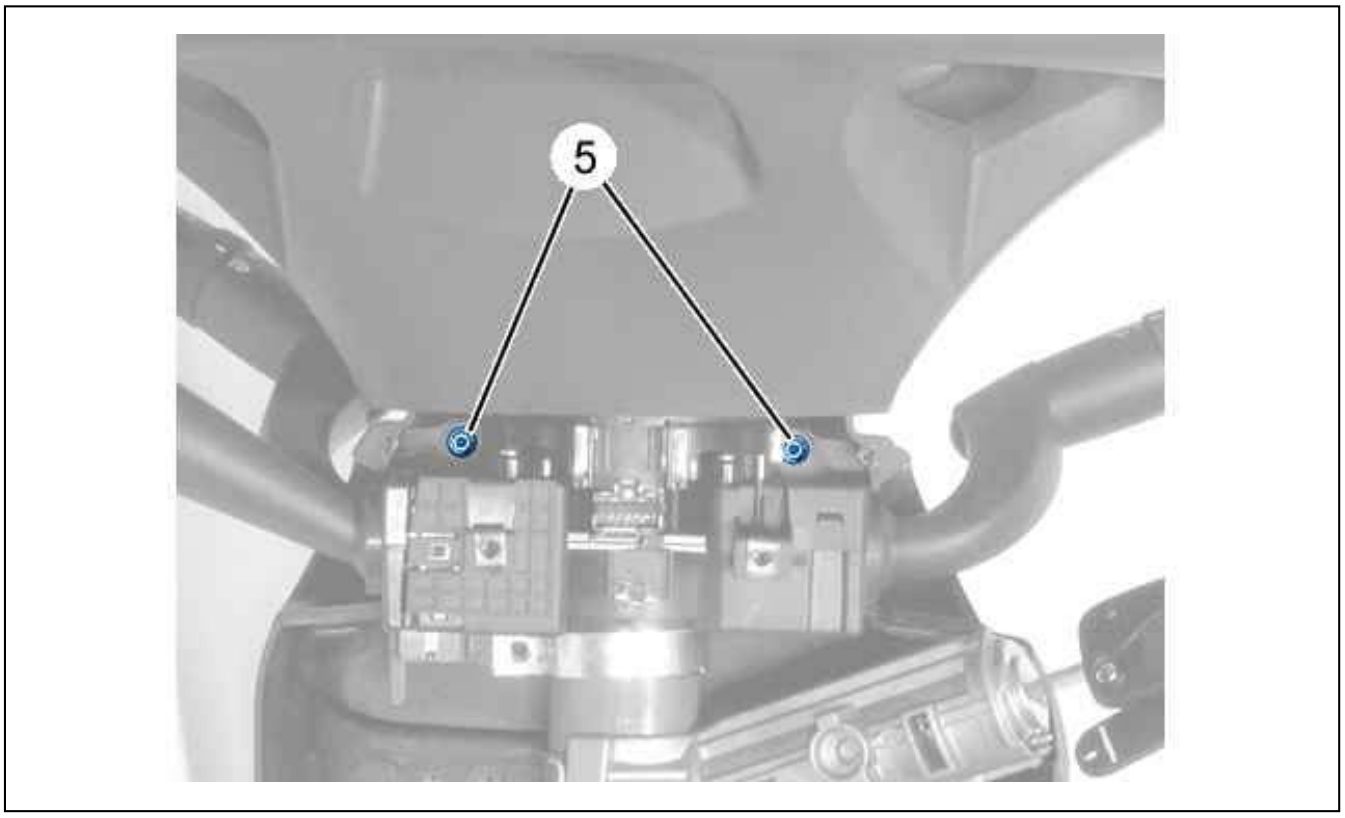

Figure : C5FP0YYD

Remove the bolts (5).

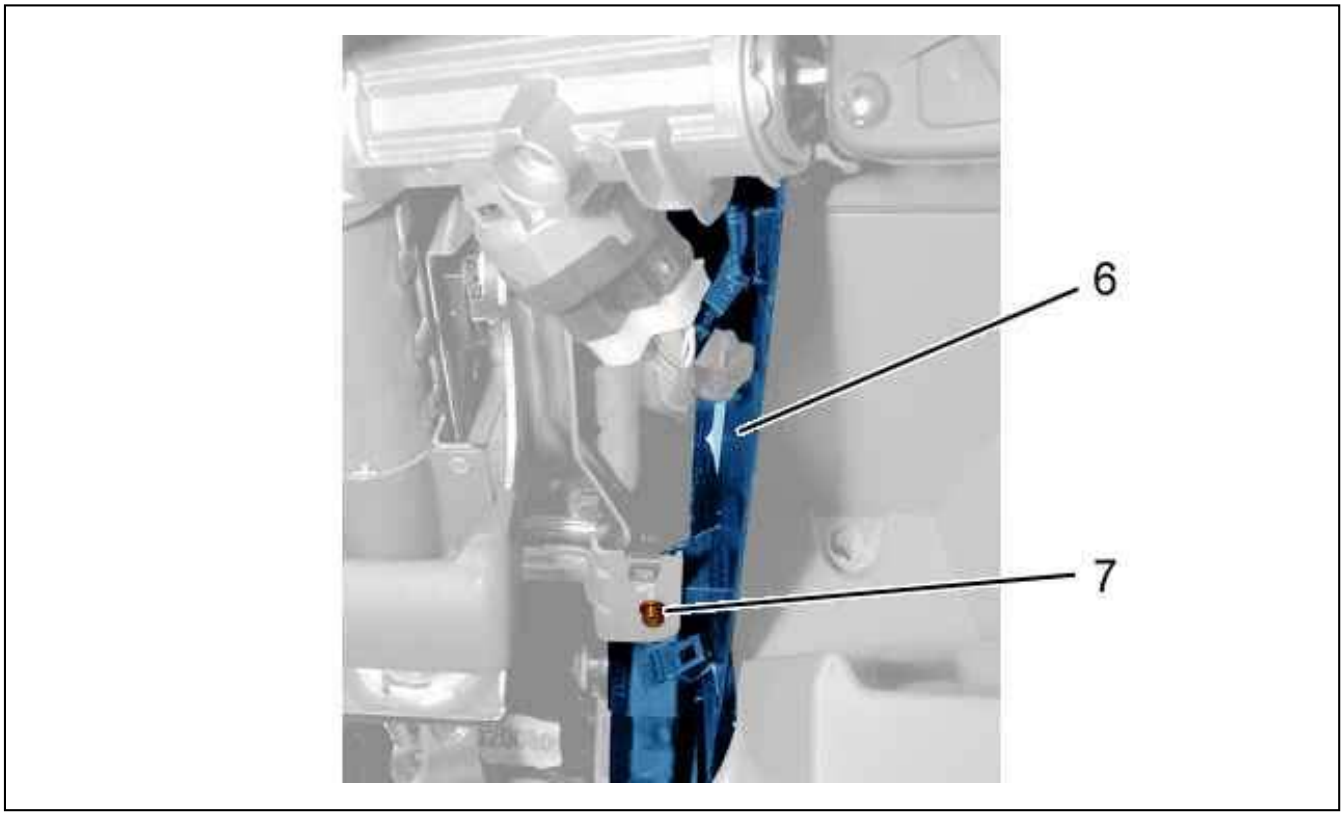

Figure : C5FP0YSD

Remove :

- The (7) bolt
- The steering column upper cowling (6)

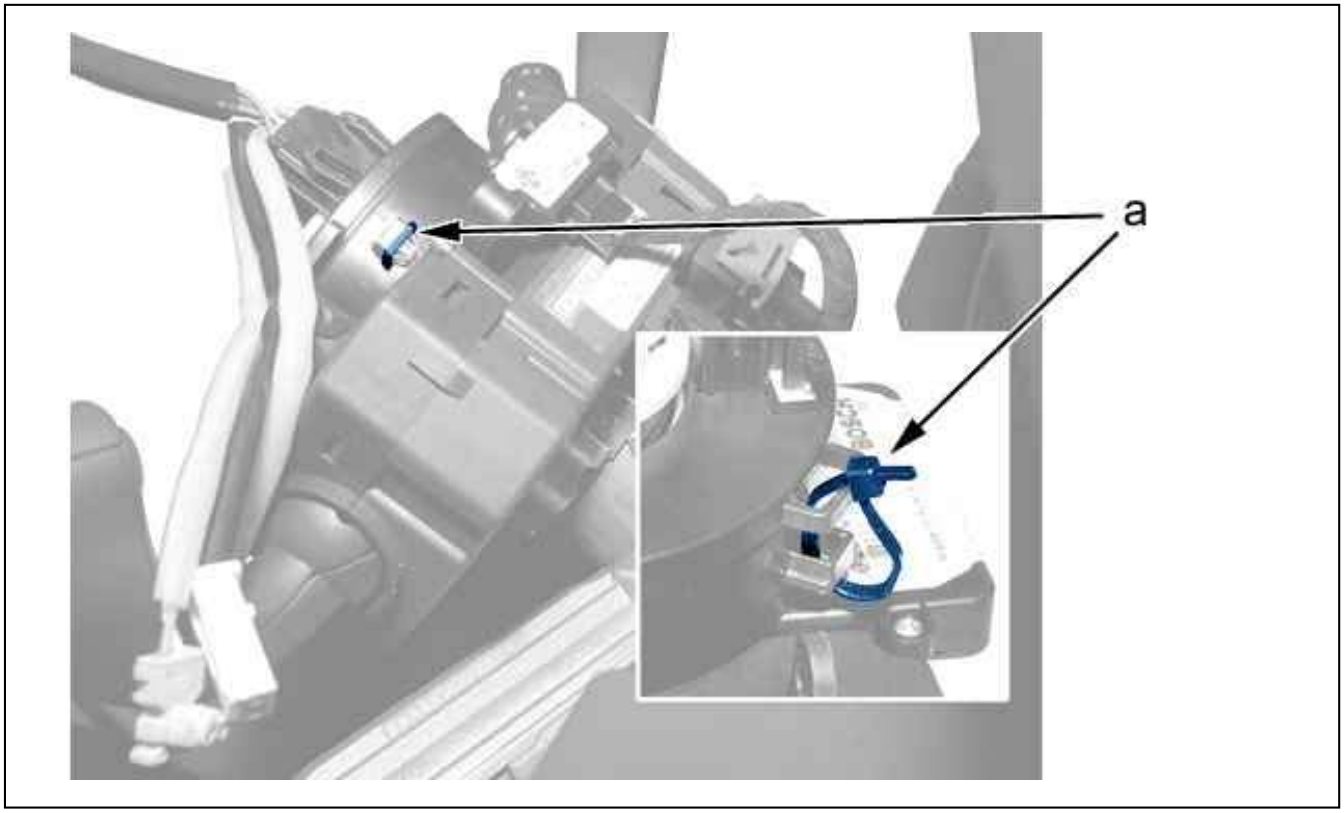

Figure : C5FP0YTD

Fit a plastic collar to maintain the position of the rotary switch (at "a").

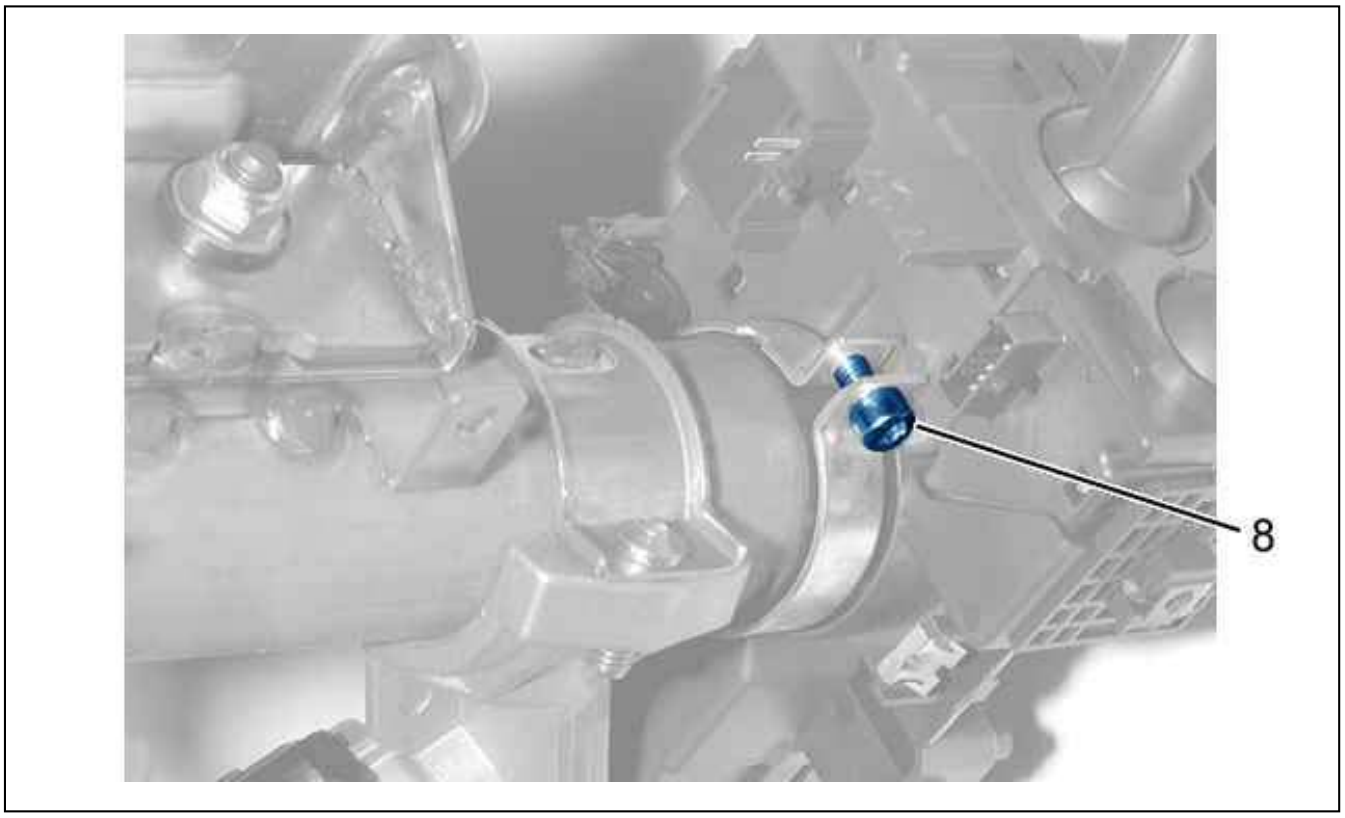

Figure : B3EP18ND

Remove bolts (8).

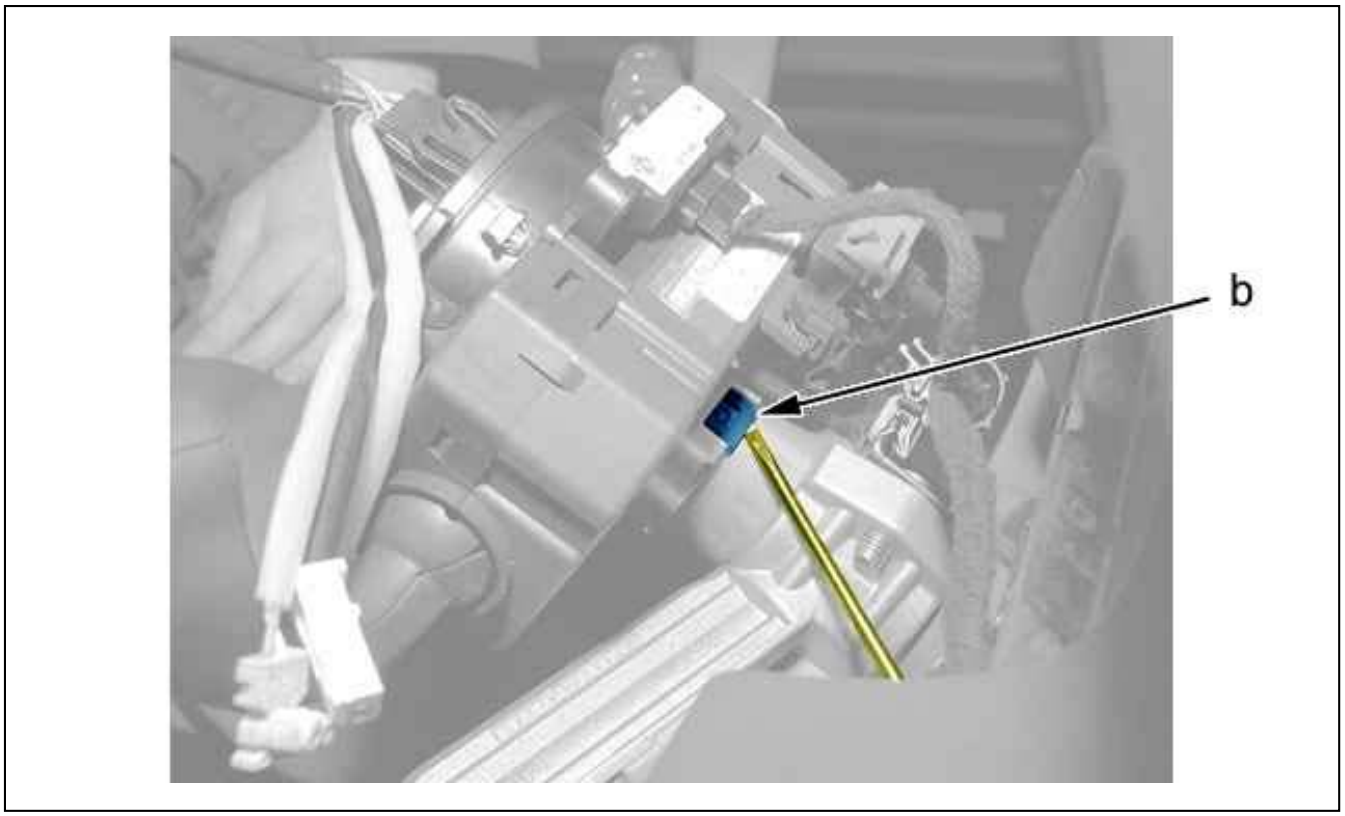

Figure : C5FP0YZD

Detach the assembly of controls under the steering wheel (at "b") By means of a screwdriver.
Disengage all the controls under the steering wheel.
Disconnect the connectors .
Remove the steering wheel controls assembly .

2. Refitting

Replace the steering wheel controls assembly.
Connect the connectors .
Fit the bolt (8) ; Tighten to 0,5 ± 0,2 daN.m.
Cut and remove the plastic collar.
Refit :

- The steering column upper cowling (6)
- The (7) bolt ; Tighten to 0,2 ± 0,02 daN.m
- The bolts (5) ; Tighten to 0,2 ± 0,02 daN.m
- The lower trim on the steering column (3)
- The bolts (4) ; Tighten to 0,2 ± 0,02 daN.m
- The bolts (2) ; Tighten to 0,2 ± 0,02 daN.m
- The lower panel (1) (see the relevant operation)
- The steering wheel (see the relevant operation)

Reconnect the battery.
Check that the steering wheel electrical controls operate correctly.

REMOVING - REFITTING : SUN VISOR MODULE

1. Recommended tools

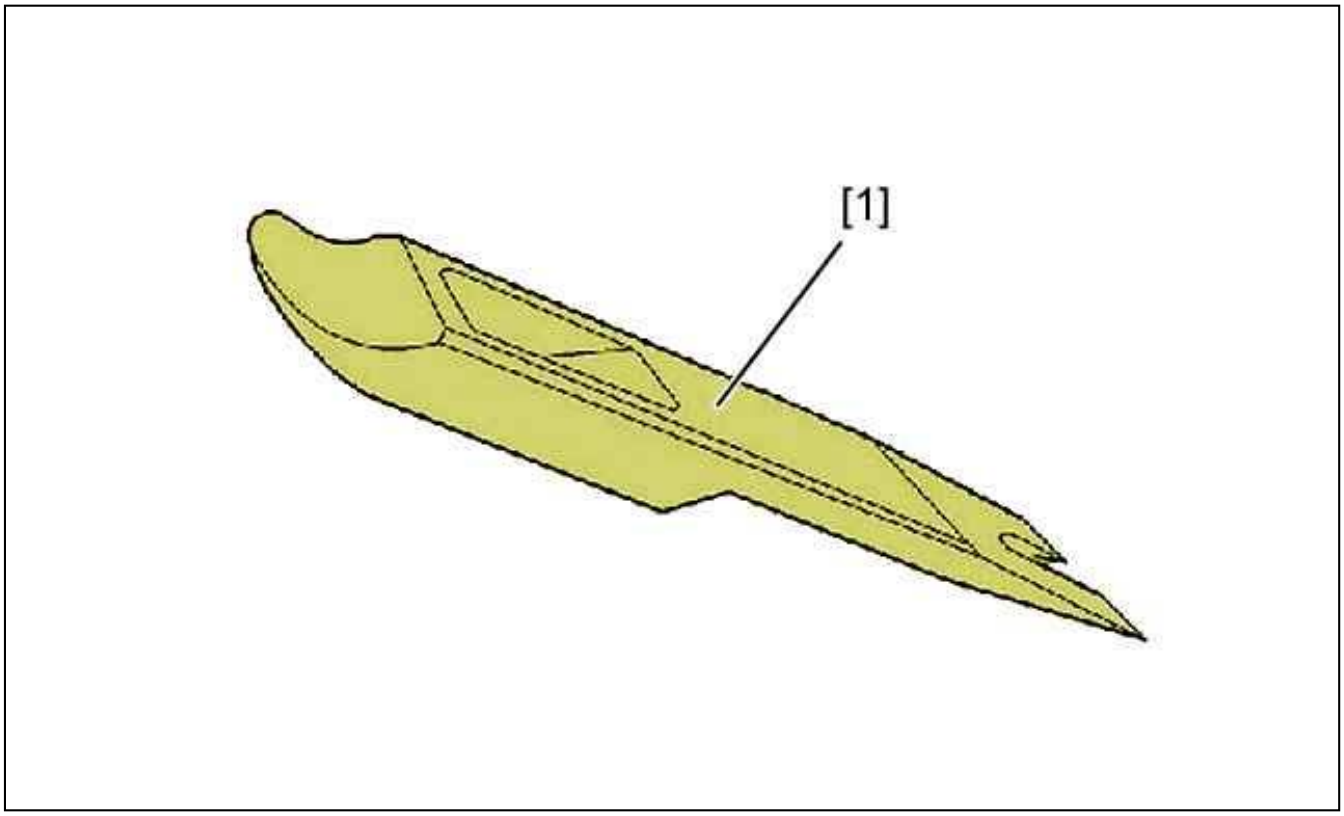

Figure : E5AP2THD

Reference	Designation	Reference
[1]	Unclipping lever	(-).1330-E
	Tool for removing side mouldings	8205-T.E

2. Removing

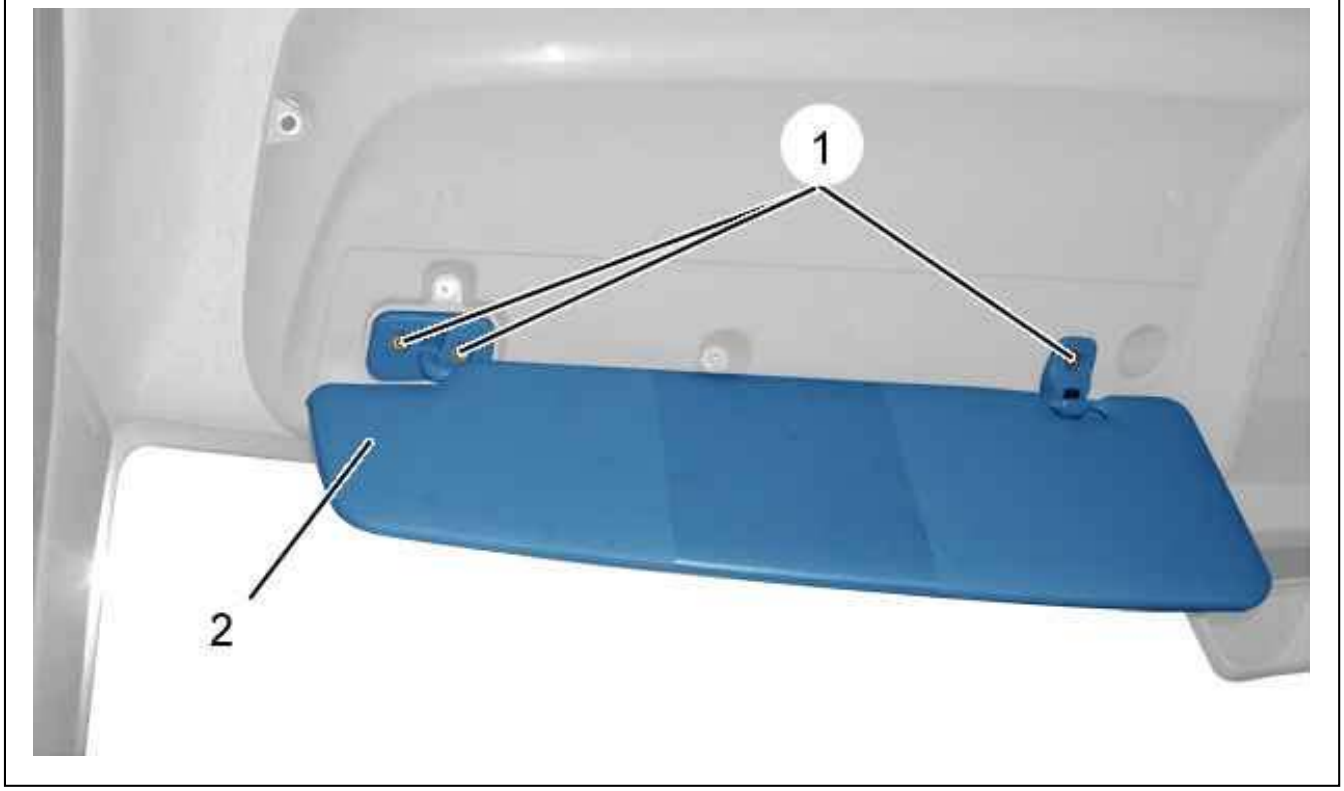

Figure : C5GP0MFD

Remove (driver's side) :

- The sun visor screws (1)
- The sun visor (2)

Proceed in the same way for the other side.

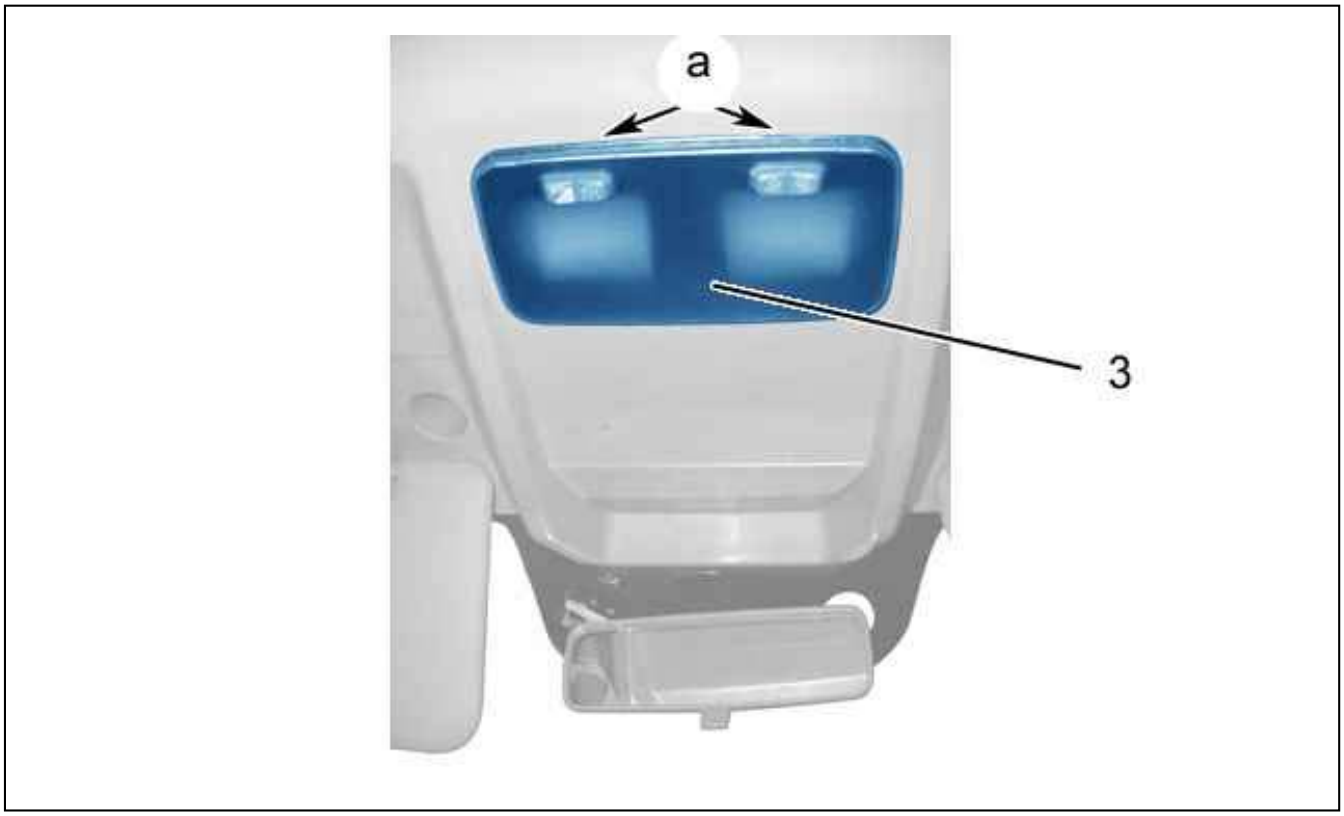

Figure : C5GP0MGD

Detach the interior lighting (3) (at "a") ; Using tool [1].
Disengage the interior lamp (3) (partly).

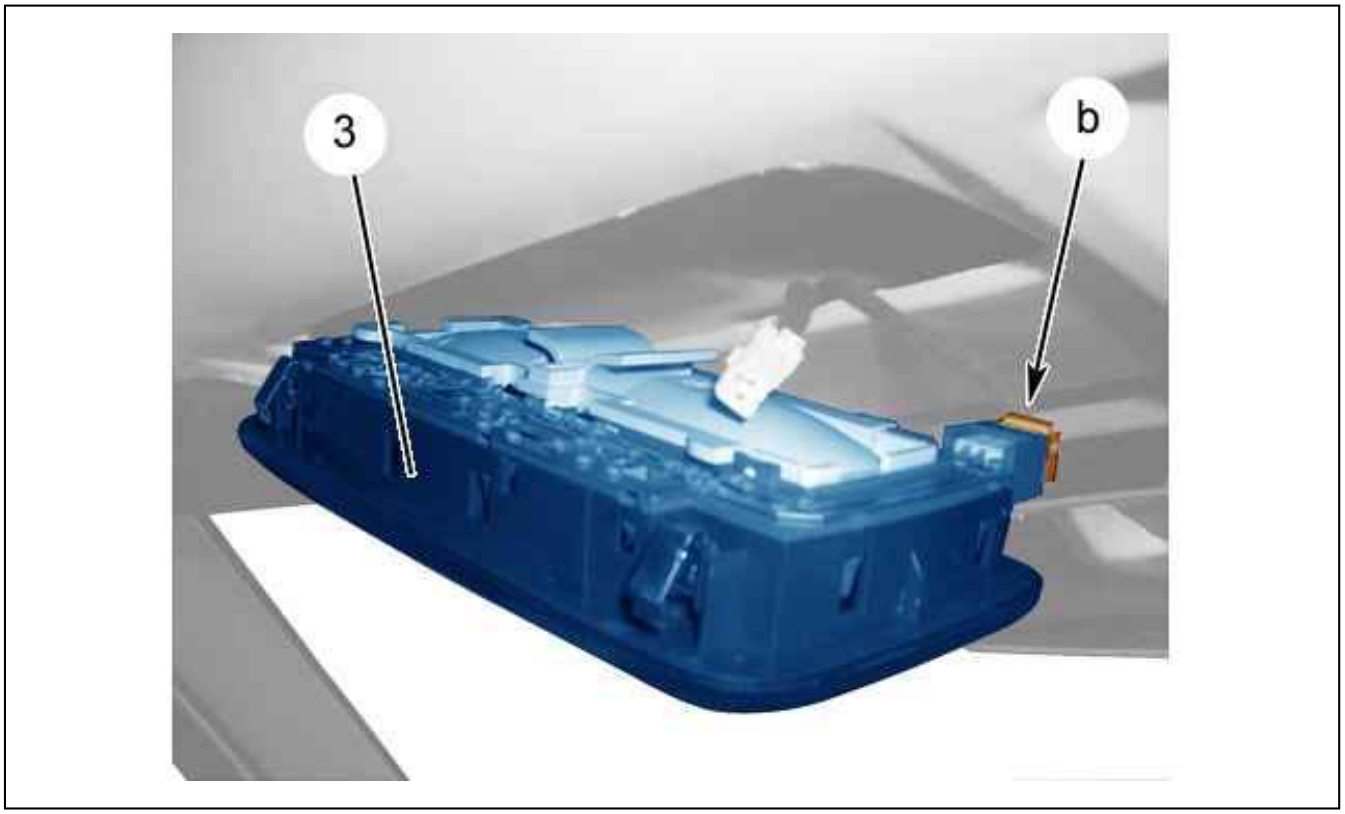

Figure : C5GP0MHD

Disconnect the connector as "b".
Remove the interior lamp (3).

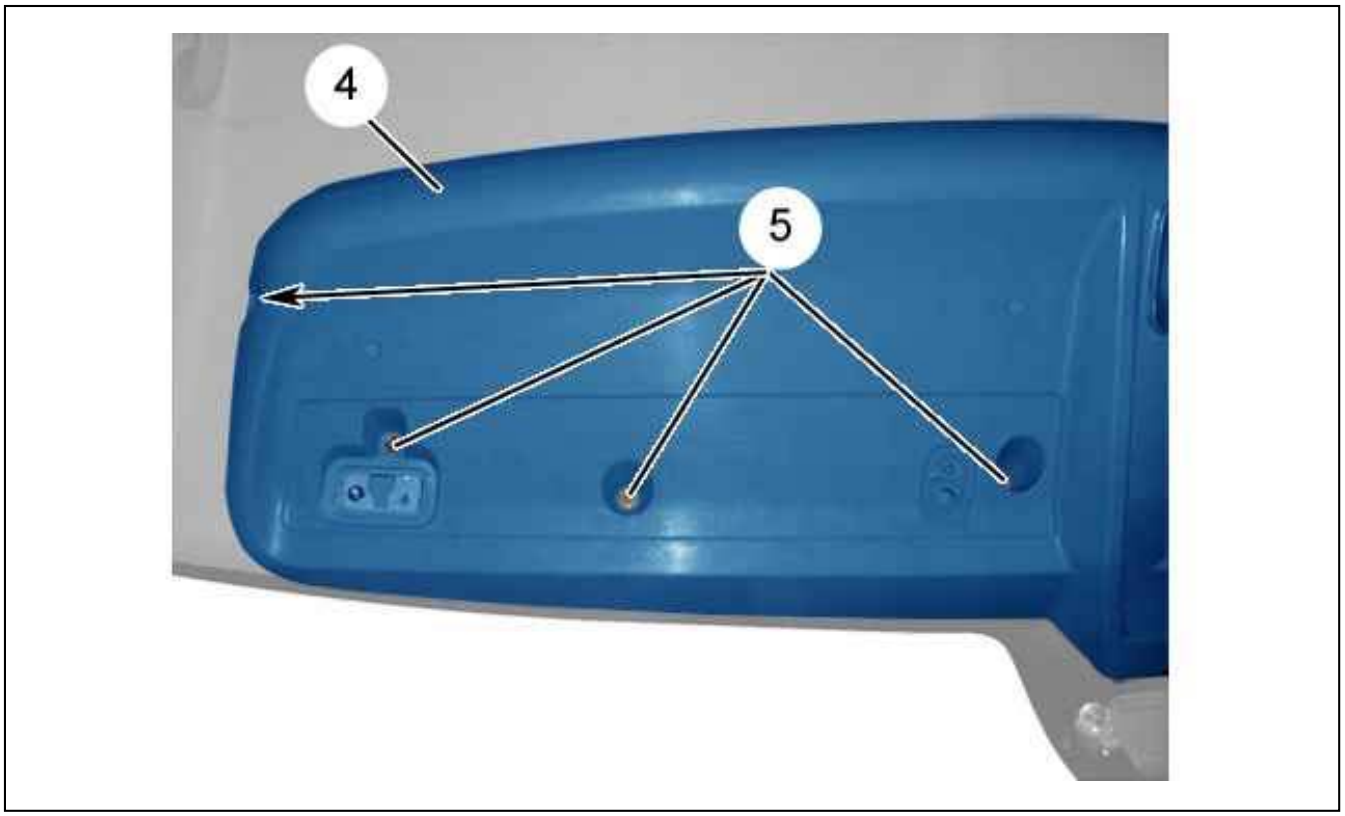

Figure : C5GP0MJD

Remove the bolts (5) (driver’s side).
Proceed in the same way for the other side.
Remove the sun visor module (4).

3. Refitting

Proceed in the reverse order to removal.
Check all the equipment works.

CHECK - ADJUSTMENT : HEADLAMP

1. Recommended tools

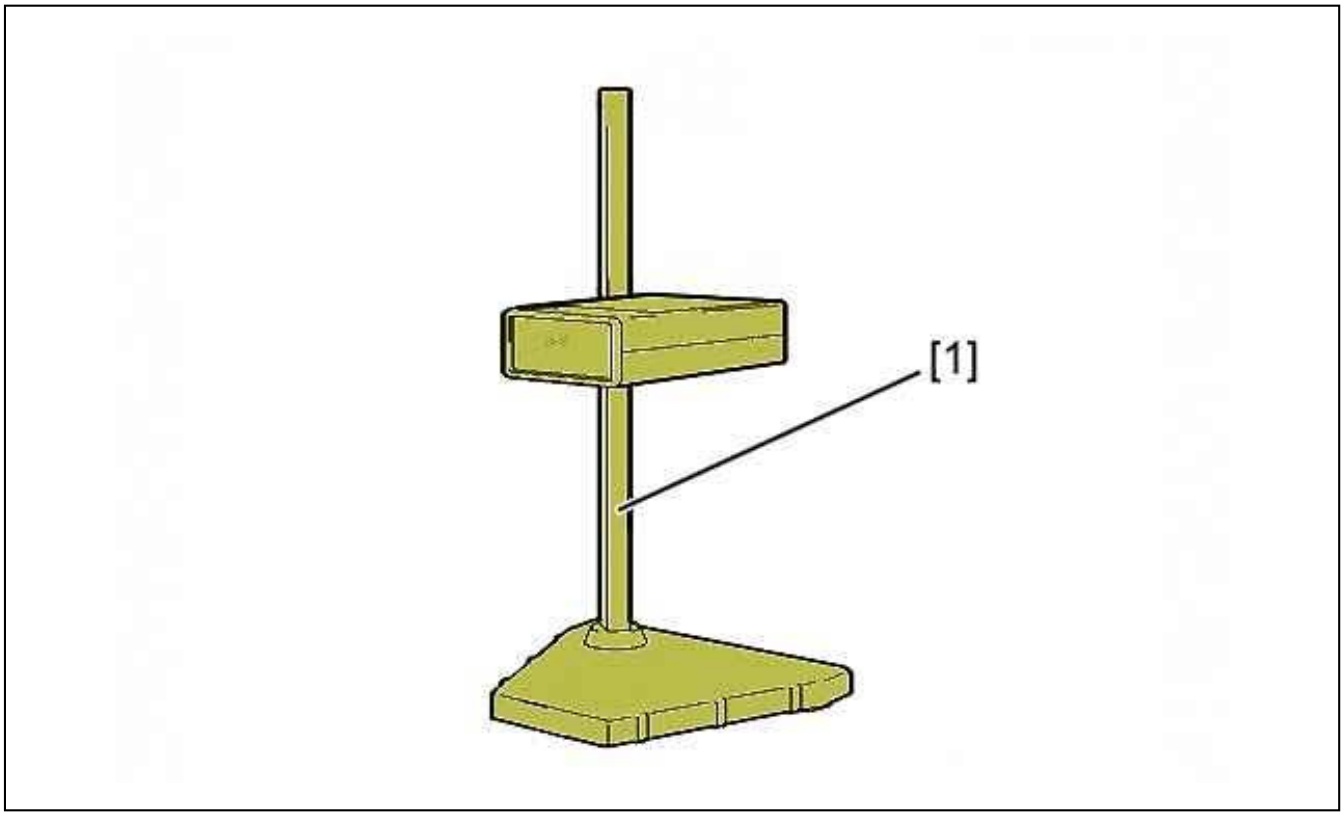

Figure : E5AP2ZHD

[1] regloscope :

- FACOM LUX 200L
- MULLER 664 LASER
- TECNOTEST 432/PM

2. Check

2.1. Prior conditions for checking

Unload the vehicle.
The vehicle in running order (vehicle empty with all systems filled).
Remove any excessive accumulation of mud, snow or ice which could affect the ride height of the vehicle.
Check the pressure of the tyres (if necessary, correct the pressure in accordance with the manufacturer’s specifications
Park the vehicle on level ground, wheels straight ahead.

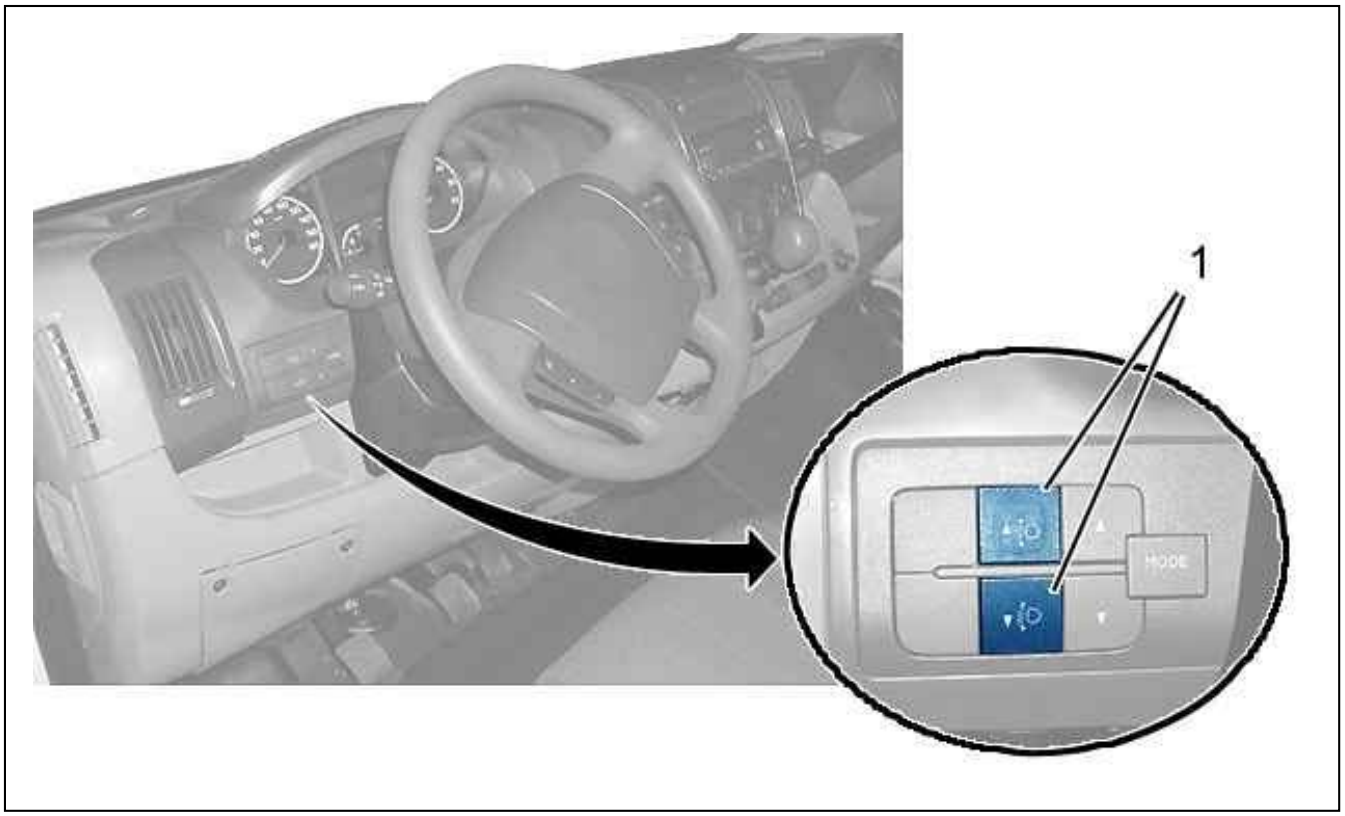

Figure : C5FP10DD

Switch on the headlamps and check the operation of the load corrector by pressing the adjustment buttons (1) and set t the normal load position " 0" ; Using the multifunction display.

2.2. Checking procedure

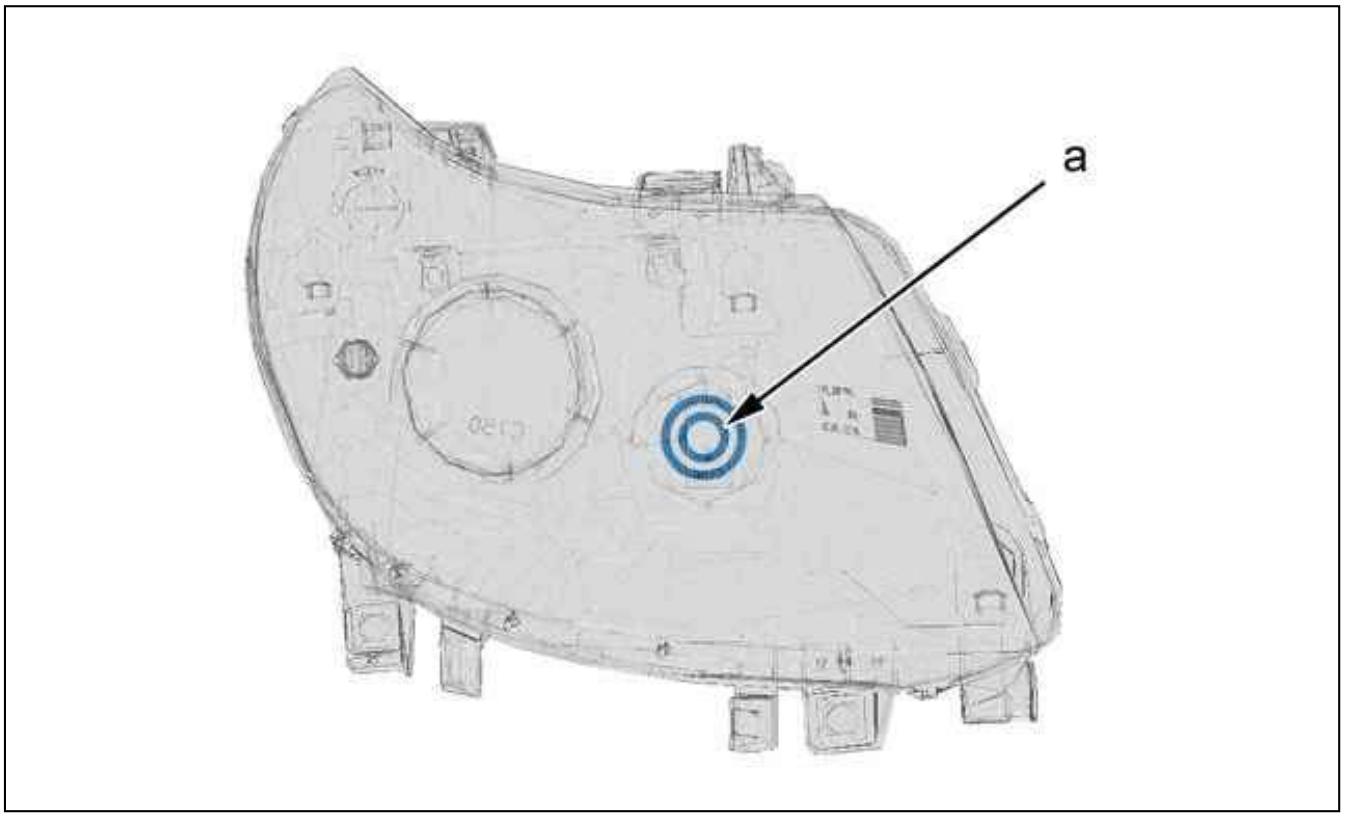

Figure : C5EP041D

Start the engine.
Align the headlamp adjuster in relation to the vehicle in accordance with the special features of the equipment [1].
Align the centre of the lens of the headlamp gauge with the optical centre of the headlamp "a" (centre of the concealing shield) ; Using tool [1].
Switch on the dipped headlamps.
Follow the checking procedure with the help of the instructions for the equipment used [1].

3. Adjustment

Apply the headlamp adjuster adjustment procedure in accordance with the equipment’s user manual [1].

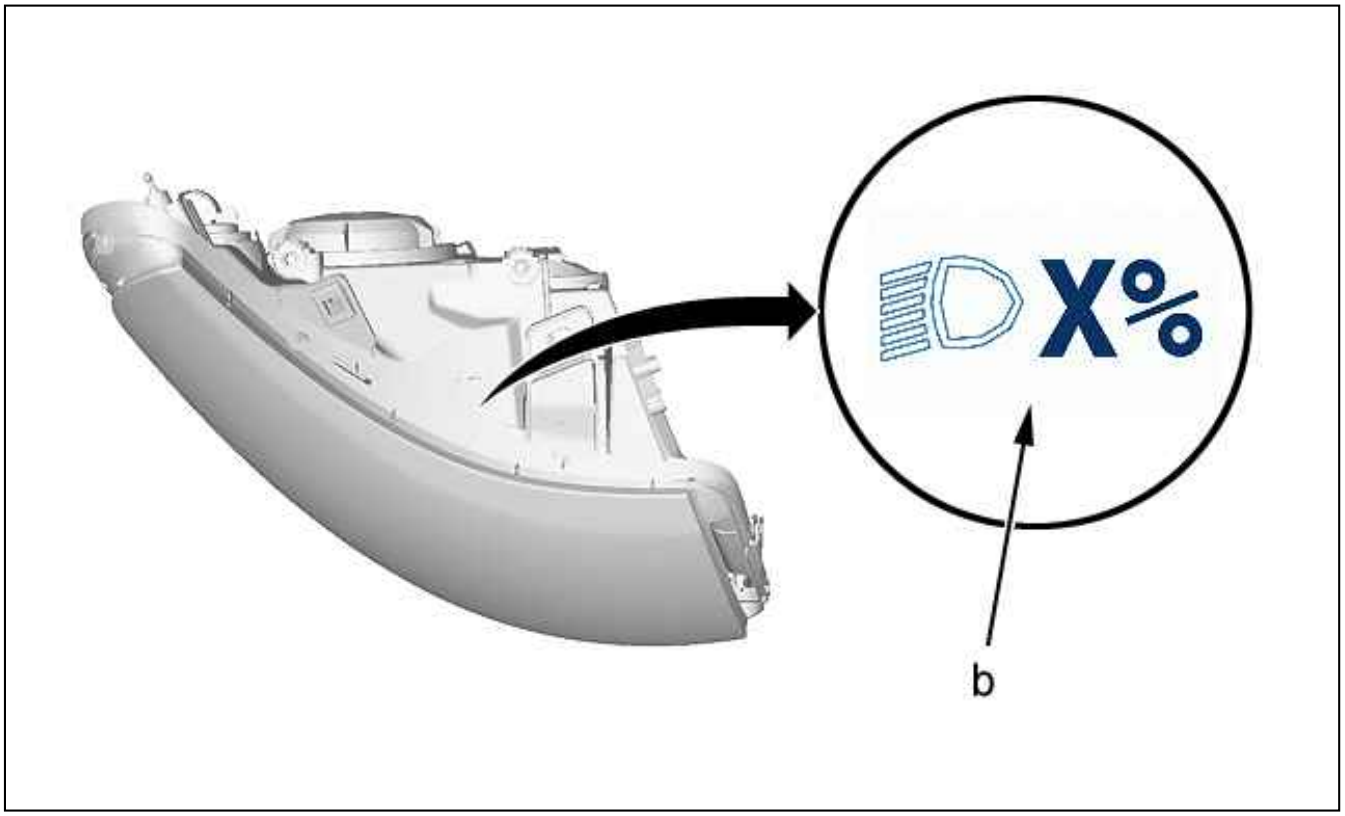

Figure : C5EP042D

Read the headlamp beam lowering value (as "b").
Configure the value read according to the type of equipment used.

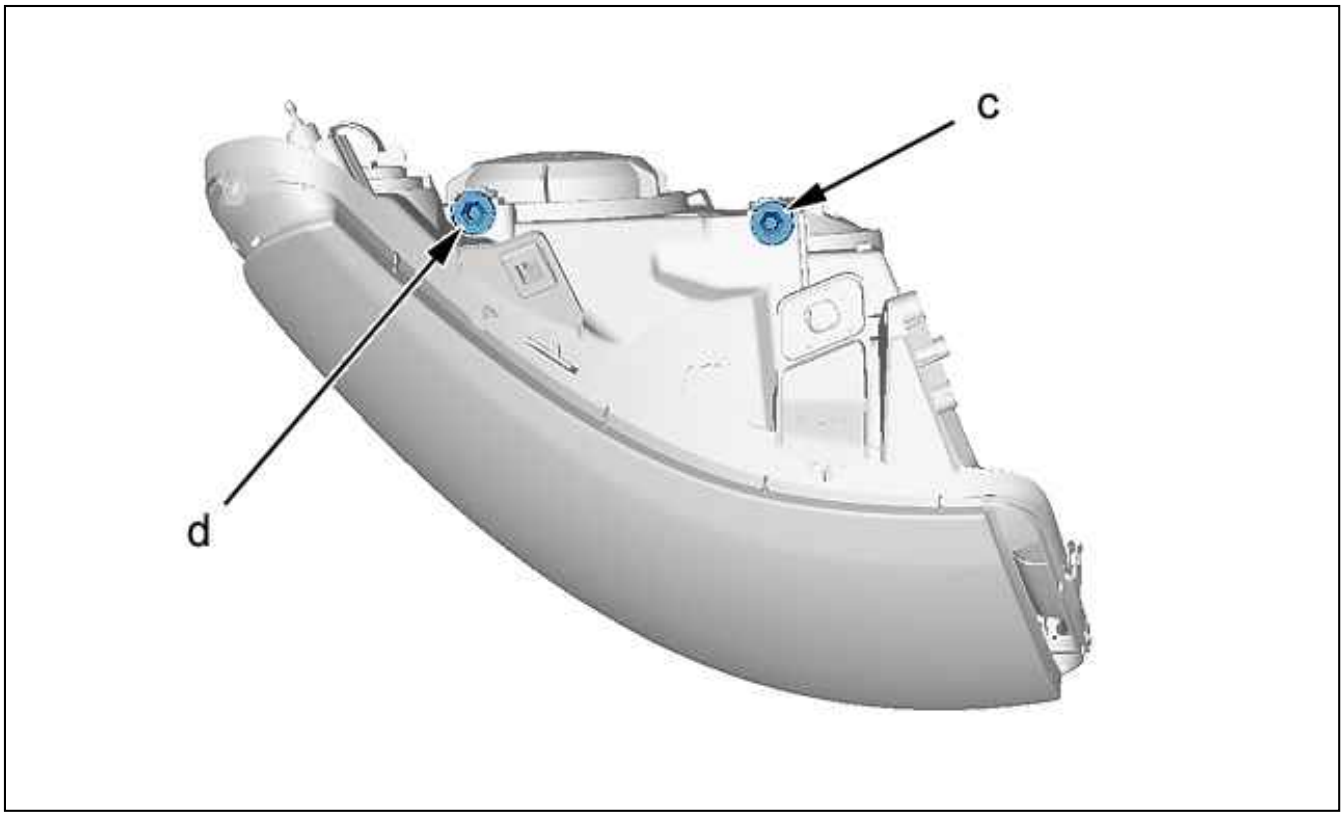

Figure : C5EP043D

Correct the vertical setting of the headlamp (height) by acting on the screw "c".
Correct the horizontal setting of the headlamp (azimuth) by acting on the screw "d".

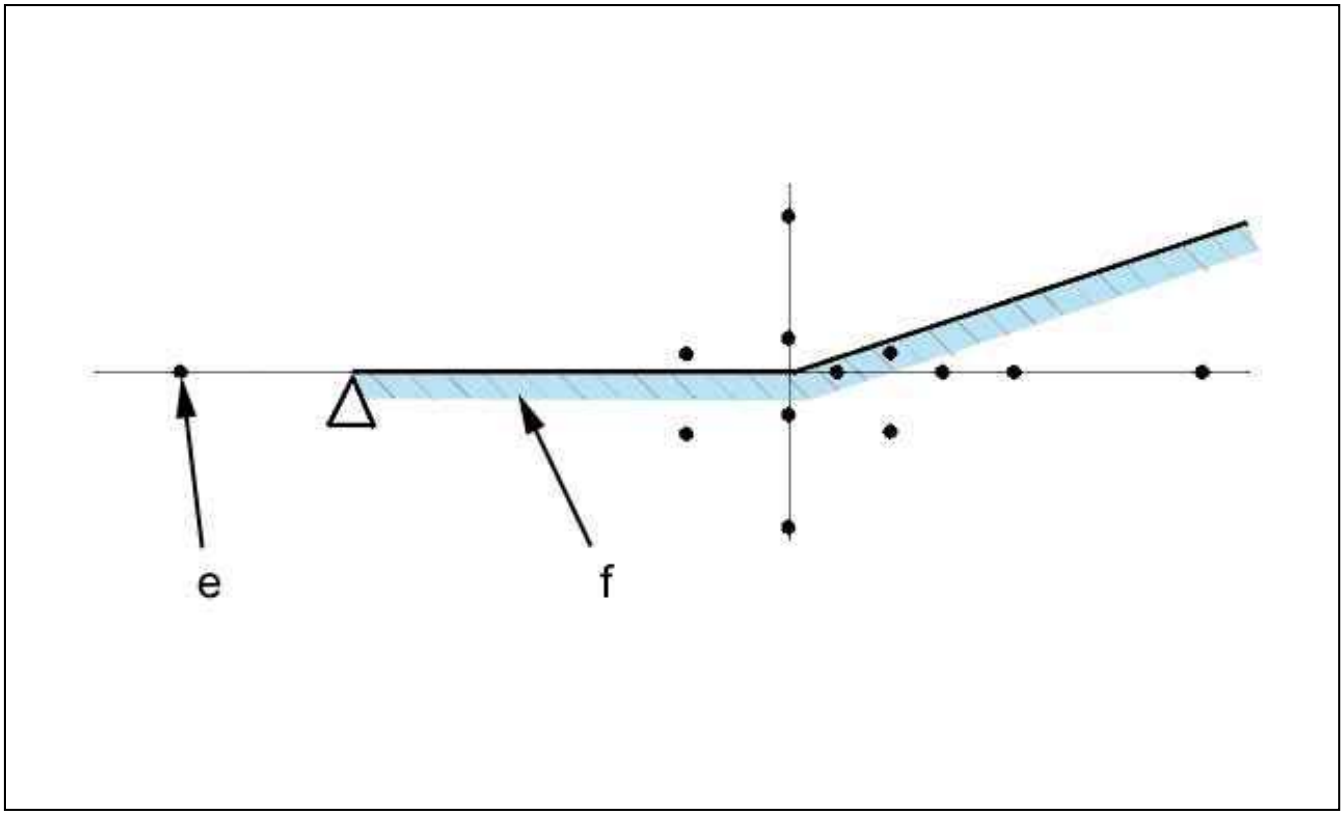

Figure : C5EP044D

Align the headlamp beam "f" slightly below the line of demarcation "e".

Adjusting the dipped headlamp automatically adjusts the main beam headlamp.
The adjustment is carried out.

REMOVING - REFITTING : THIRD BRAKE LIGHT

1. Removing

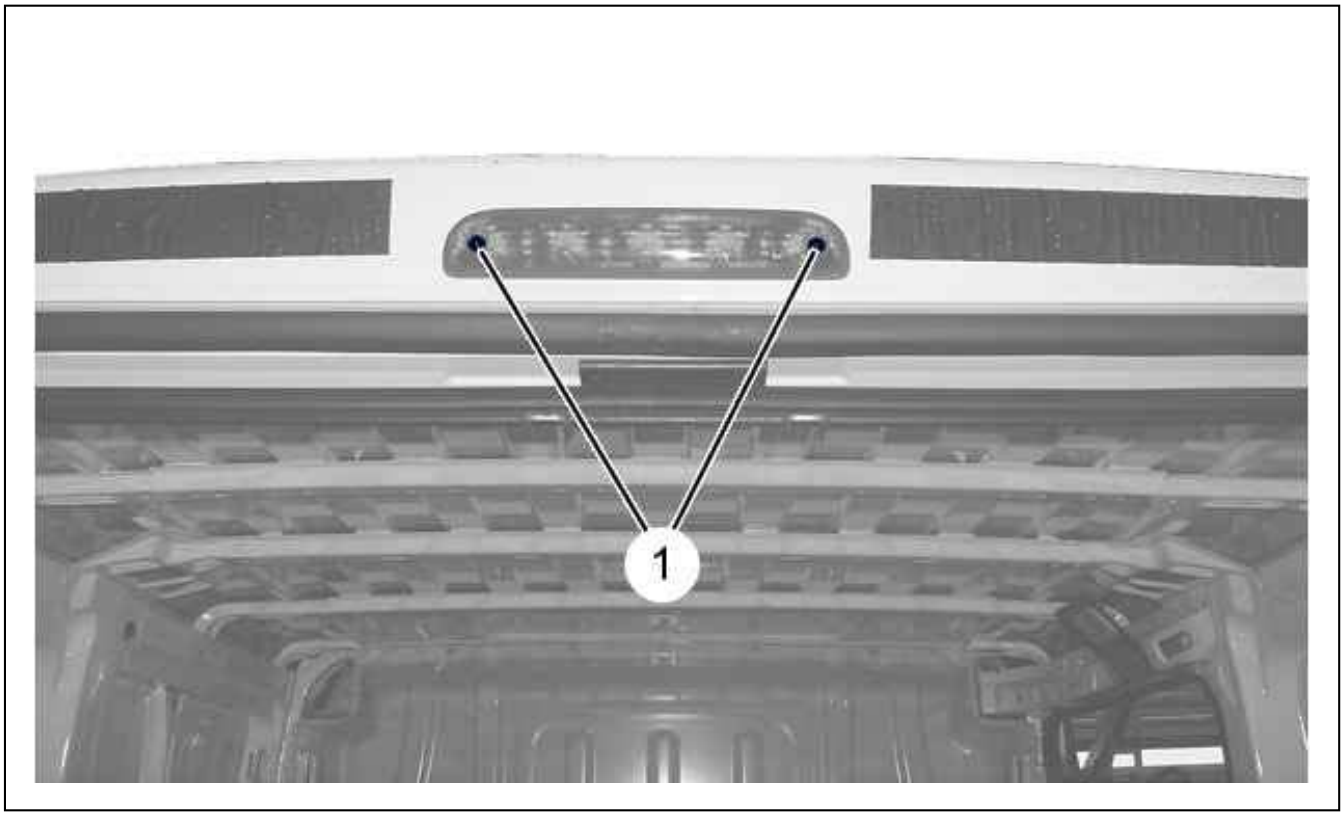

Figure : C5EP03JD

Remove the fixing screws (1).

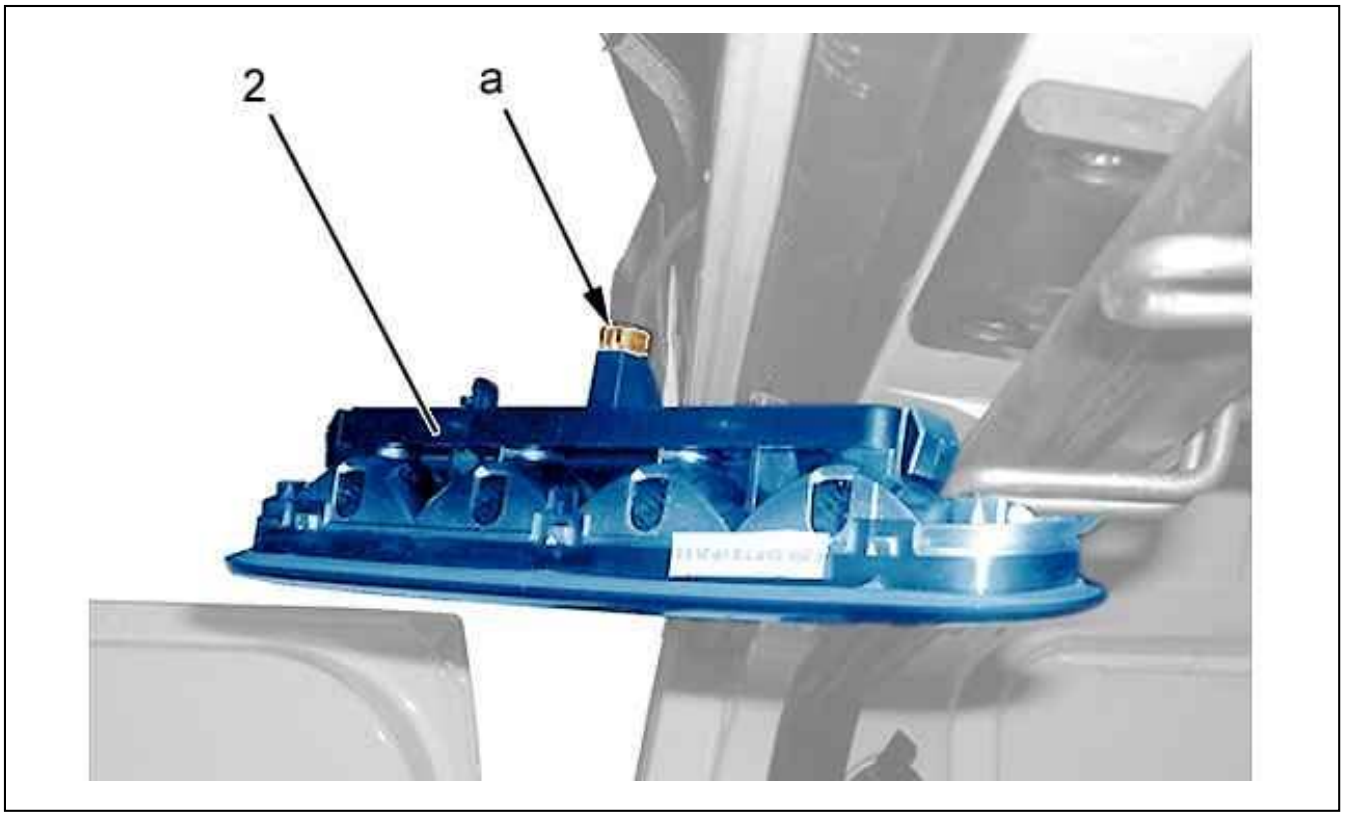

Figure : C5EP03KD

Disconnect the connector (at "a").
Remove the third brake light (2).

2. Refitting

Proceed in the reverse order to removal.
Check all the equipment works.

REMOVING - REFITTING : REAR LAMP CLUSTER

ESSENTIAL : Observe the safety and cleanliness recommendations.

1. Removing

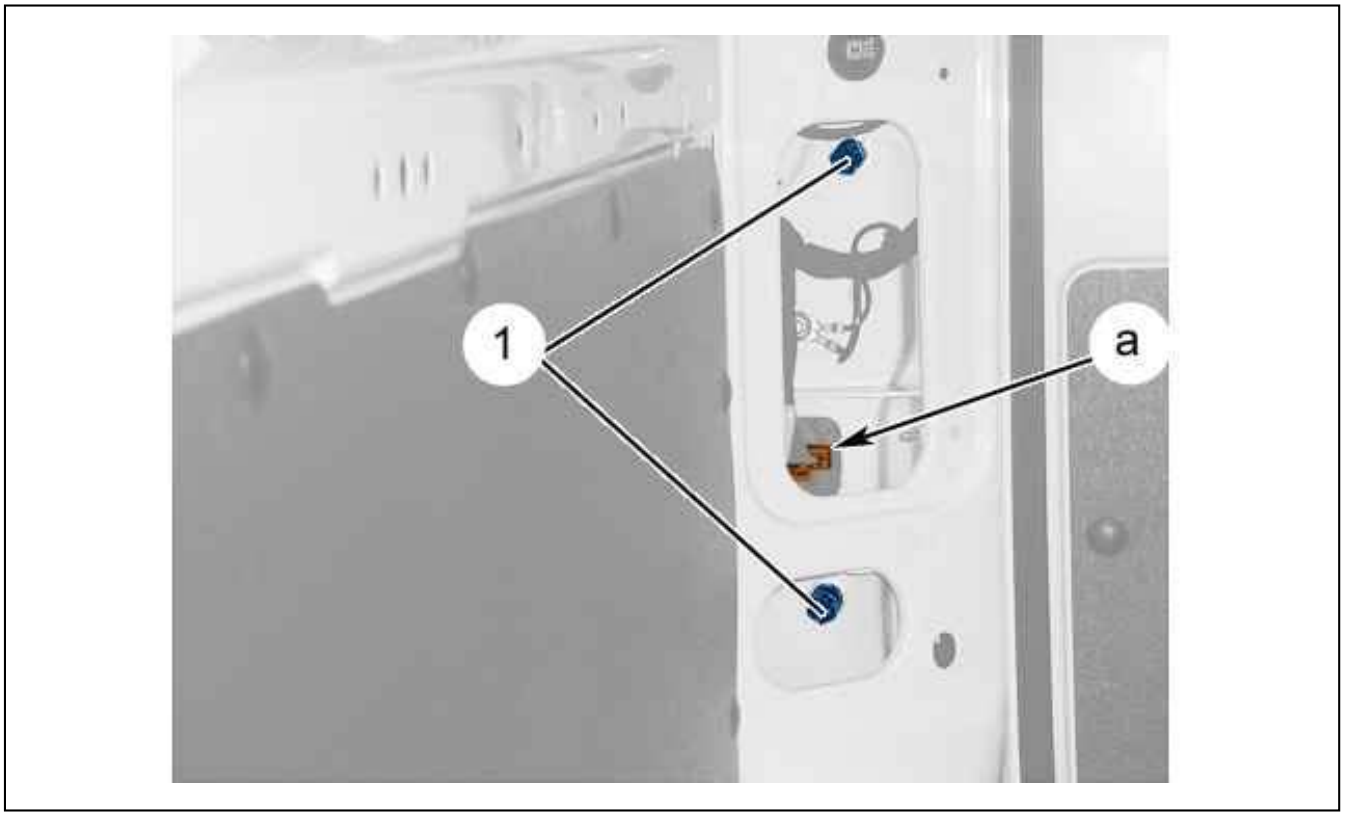

Figure : C4BP1QYD

Remove the nuts (1).
Disconnect the connector "a".
Remove the rear lamp .
Proceed in the same way for the other side.

2. Refitting

Proceed in the reverse order to removal.
Check the operation of the rear lights.

REMOVING - REFITTING : HEADLAMP

1. Removing

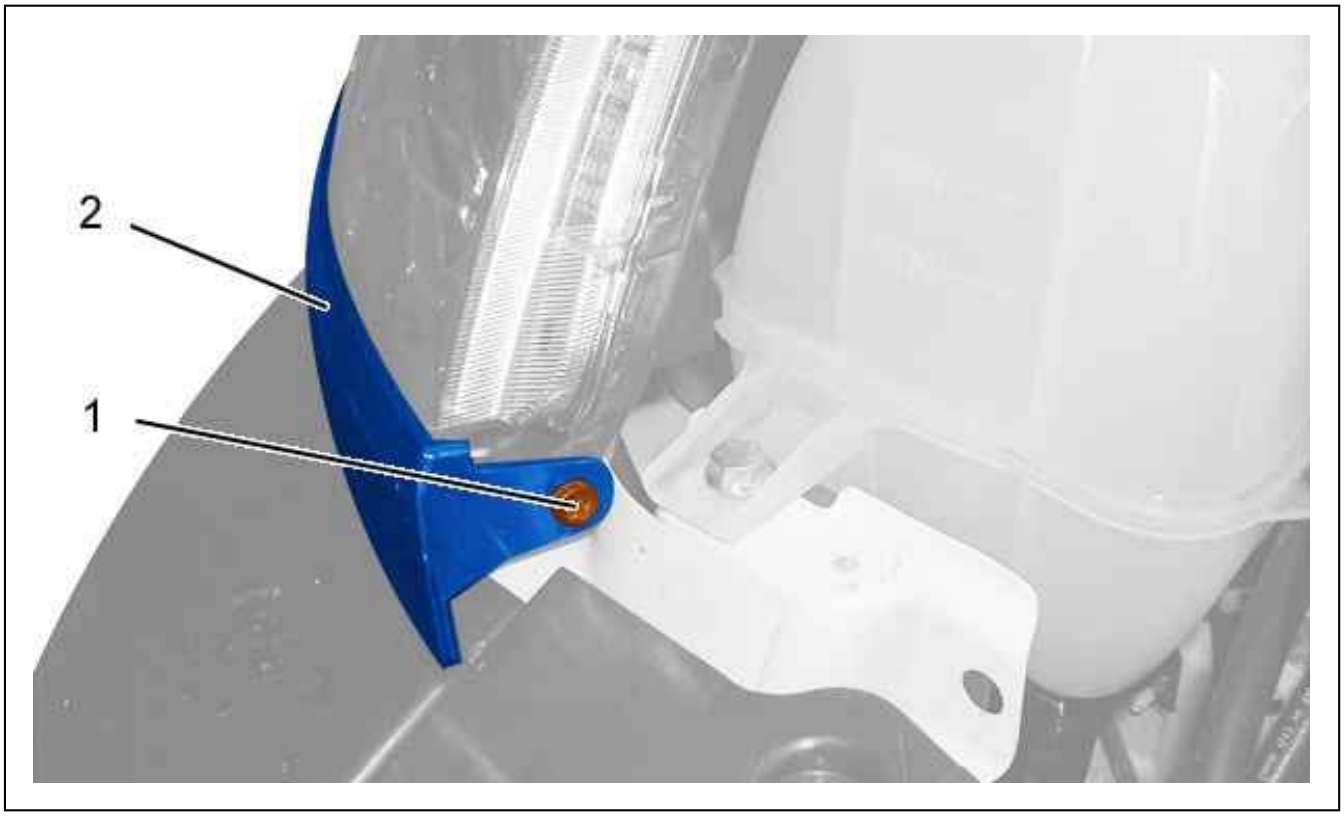

Figure : C4AP1NSD

Open the bonnet.
Remove :

- The (1) bolt
- The lower panel (2)

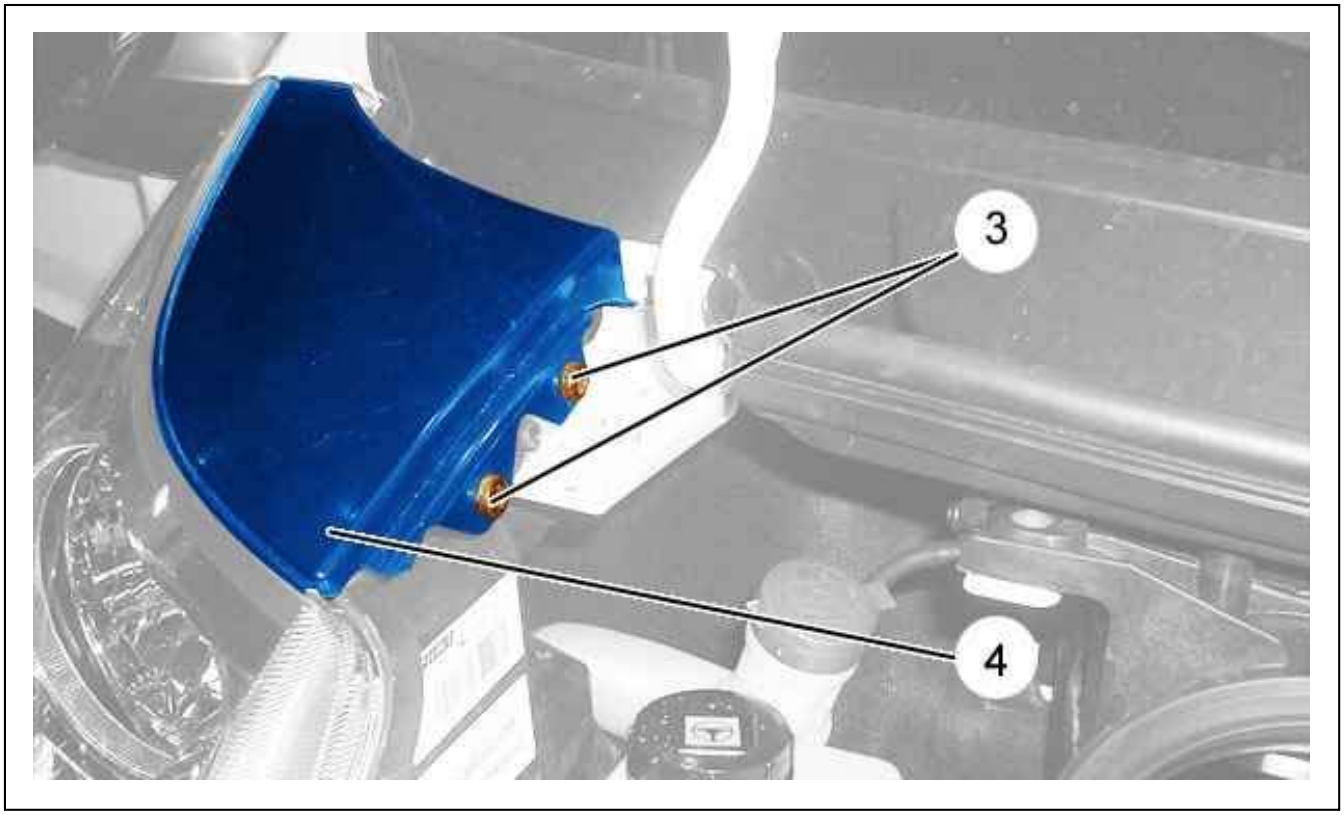

Figure : C4AP1NTD

Remove : The (3) bolt .
Remove upper panel (4).

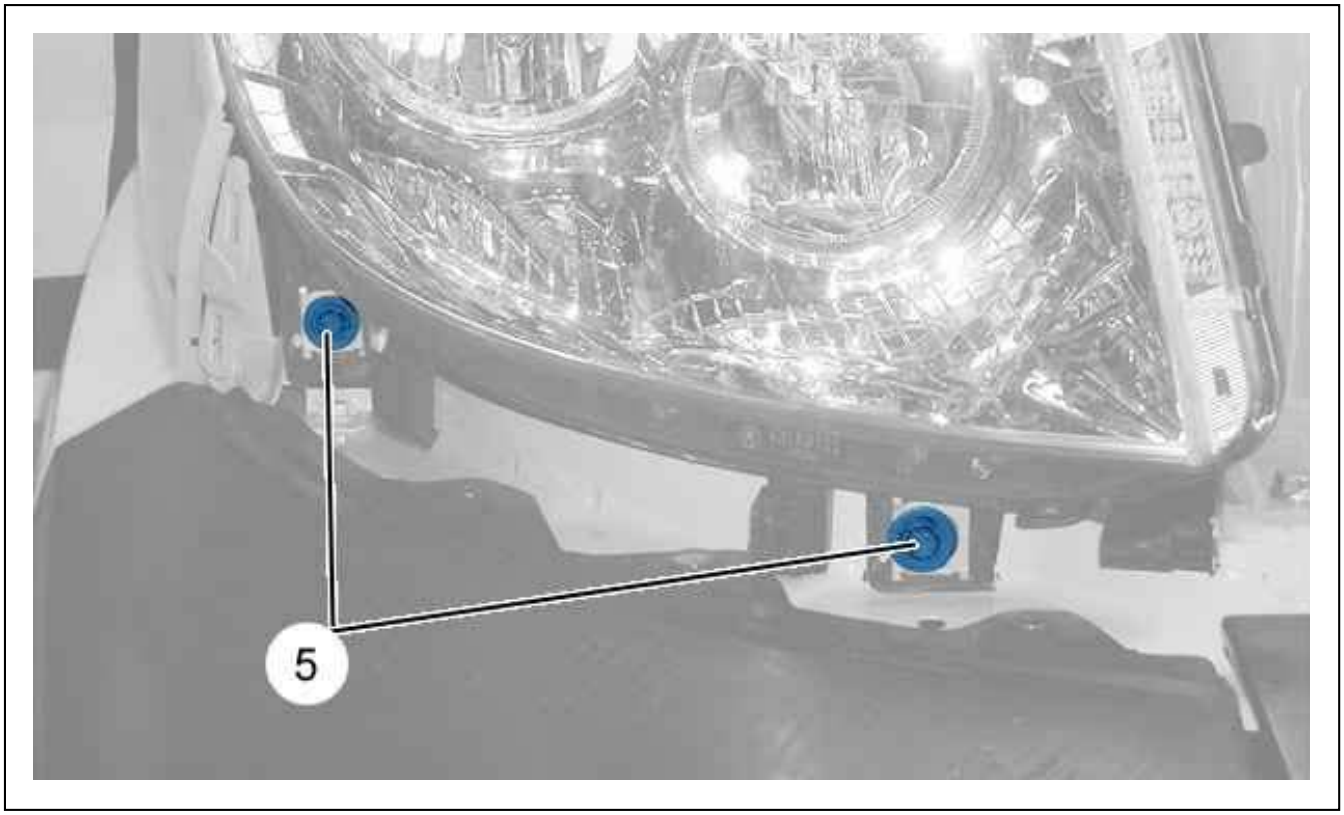

Figure : C5EP03YD

Remove the bolts (5).



Figure : C5EP03ZD

Remove bolts (7).
Unclip the headlamp washer (6) at "a".
Partially disengage the headlamp (6).

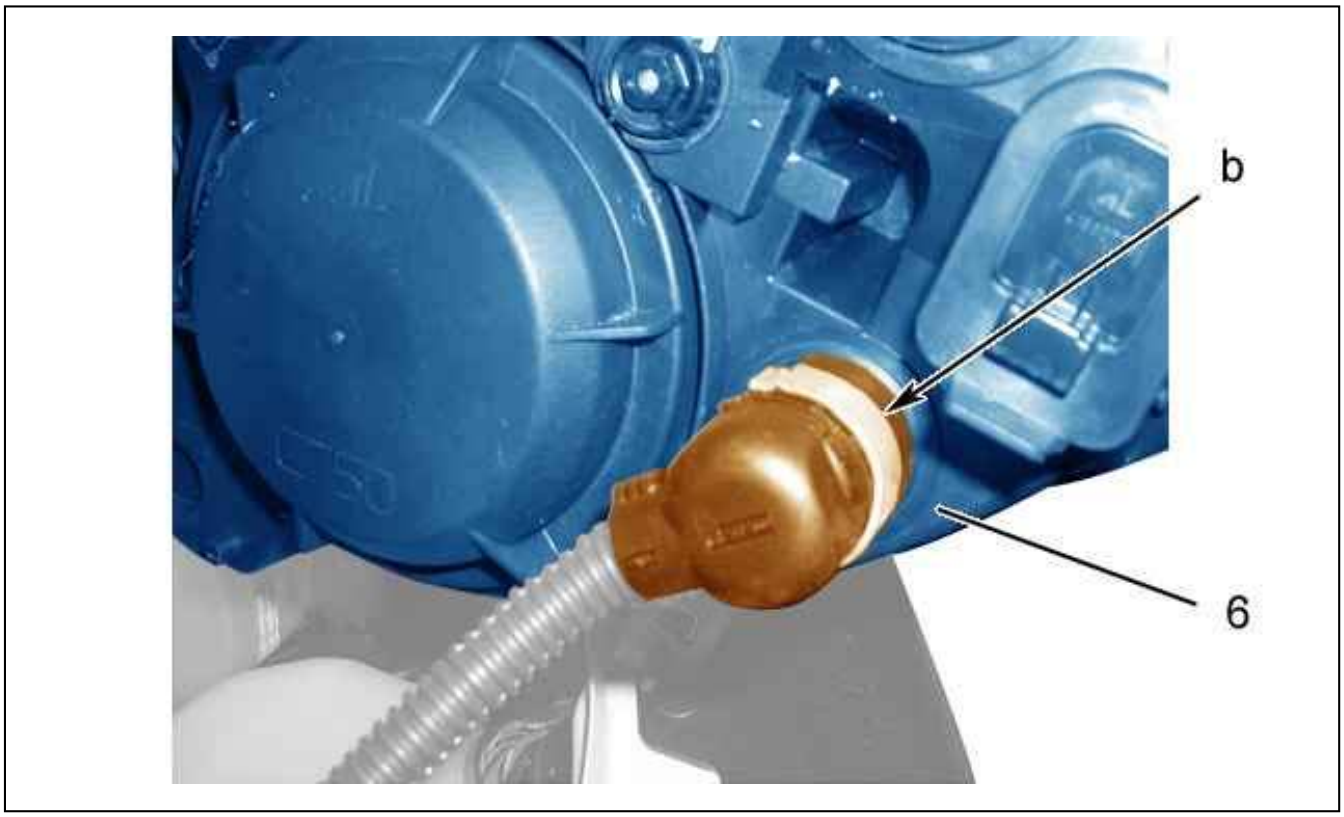

Figure : C5EP040D

Disconnect the connector (as "b").
Remove the headlamp (6).

2. Refitting

The operation is the same for the 2 headlamps.

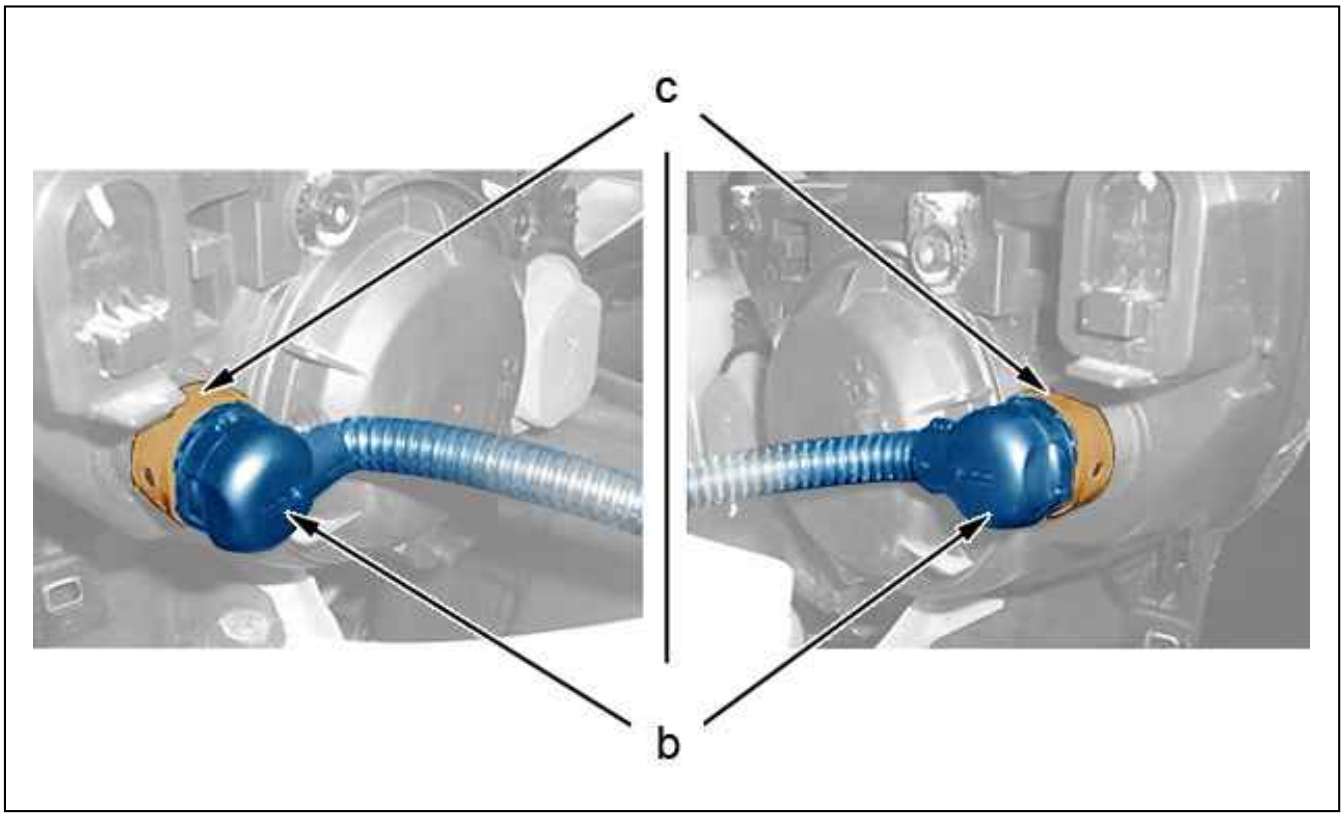

Figure : C5EM03FD

CAUTION : Connector harness turned towards the inside (following "b"). Clipping ring turned towards the outside (following "c").

Connect the connector (as "b").
Proceed in the reverse order to removal.
Adjust the headlamps (See the corresponding operation).
Check all the equipment works.

REMOVING - REFITTING : COURTESY LIGHT LAMPS

ESSENTIAL : Observe the safety and cleanliness recommendations.

1. Recommended tools

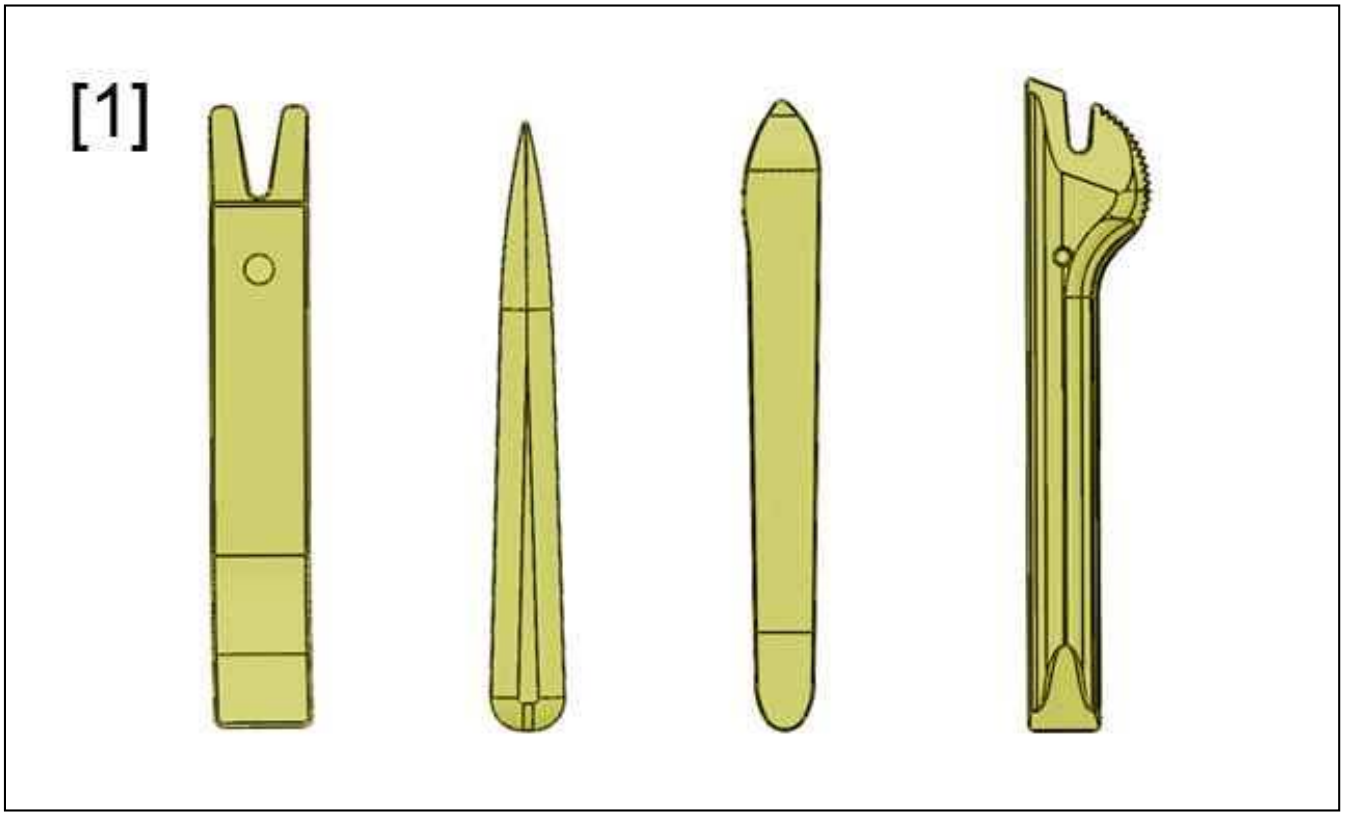

Figure : E5AP30WD

[1] Stripping tools (-).1350-ZZ.

2. Removing

Perform the following operations :

- Switch off the ignition
- Wait 3 minutes before disconnecting the battery
- Disconnect the battery

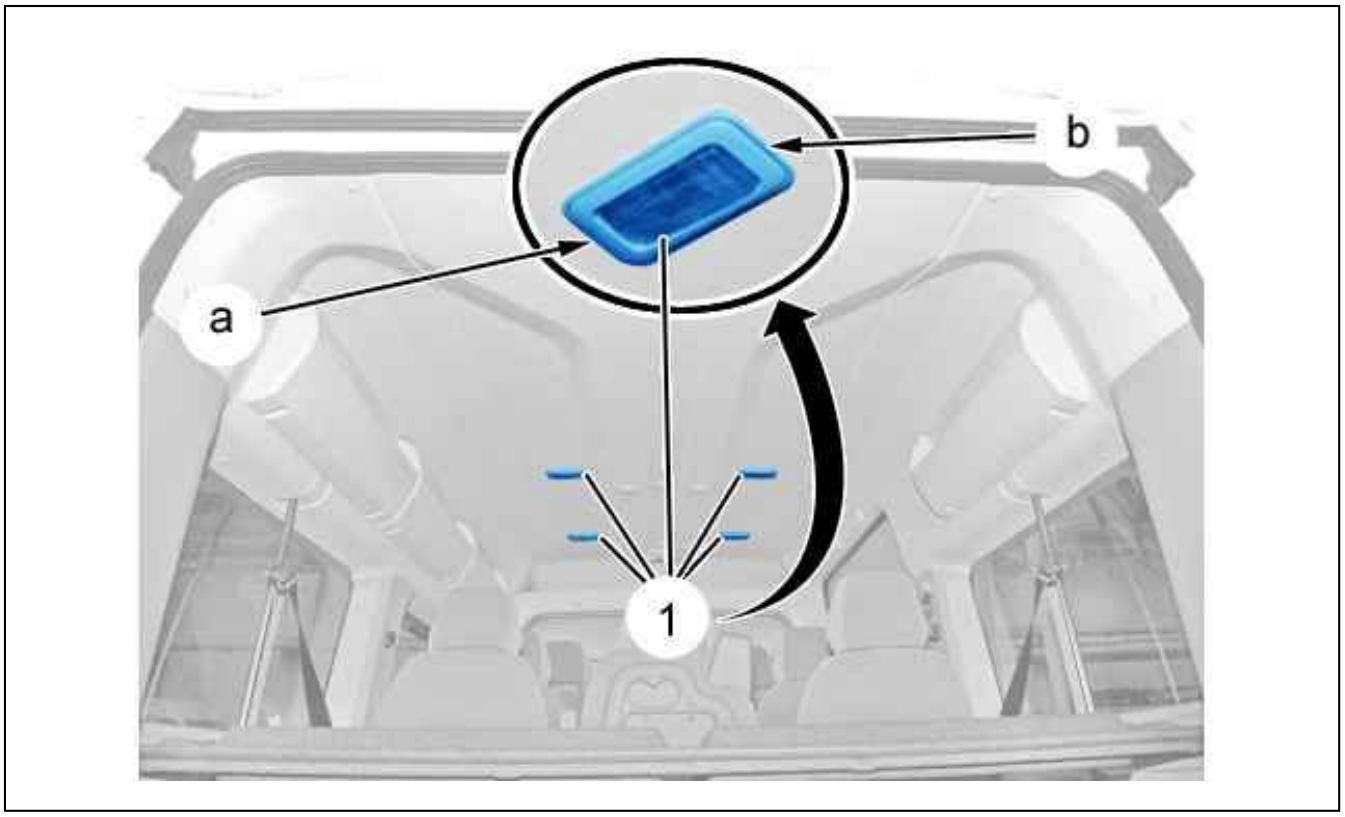

Figure : C5GM0D3D

Unclip (at "a", "b") ; Using tool [1].
Detach : The courtesy light lamps (1).

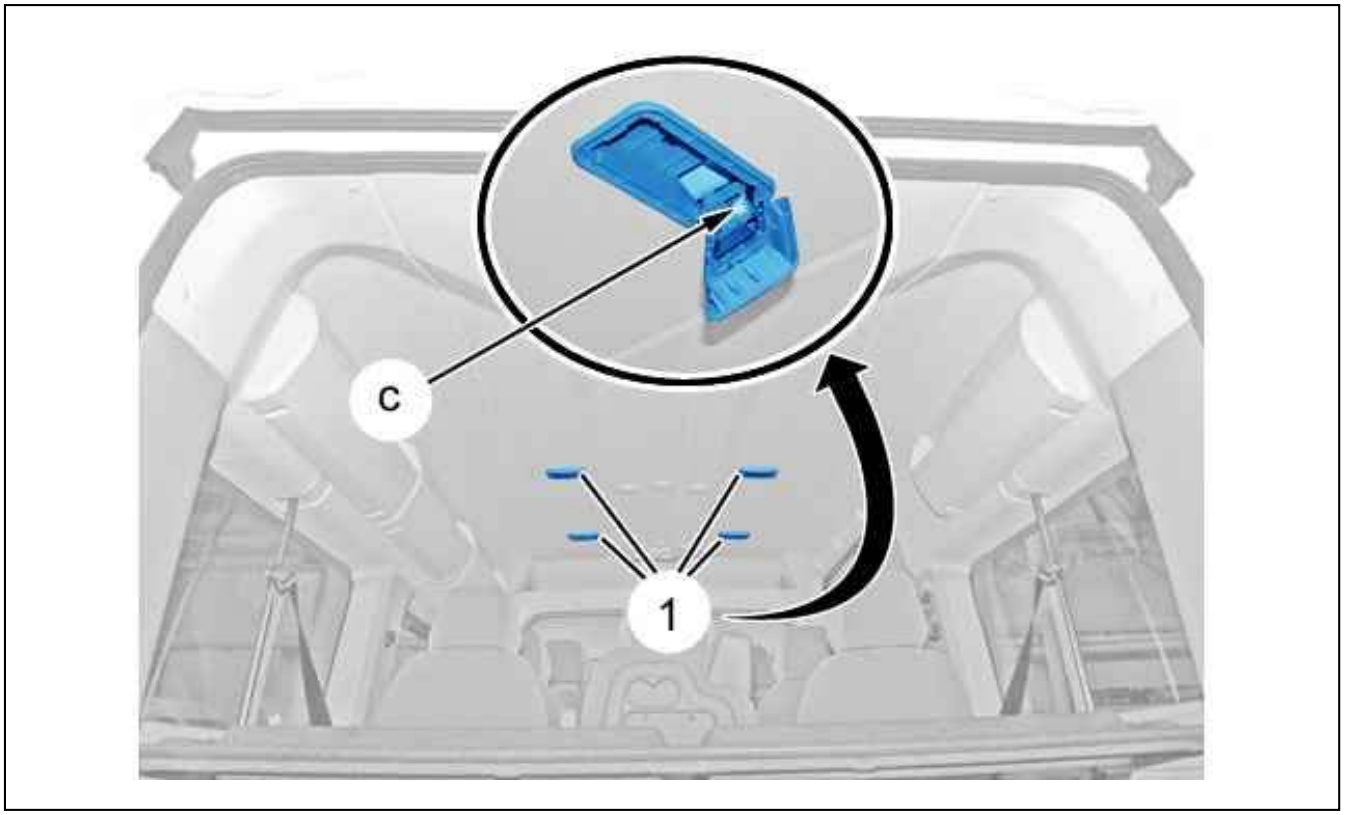

Figure : C5GM0D4D

Disconnect the connector (at "c").

Remove : The courtesy light lamps (1).

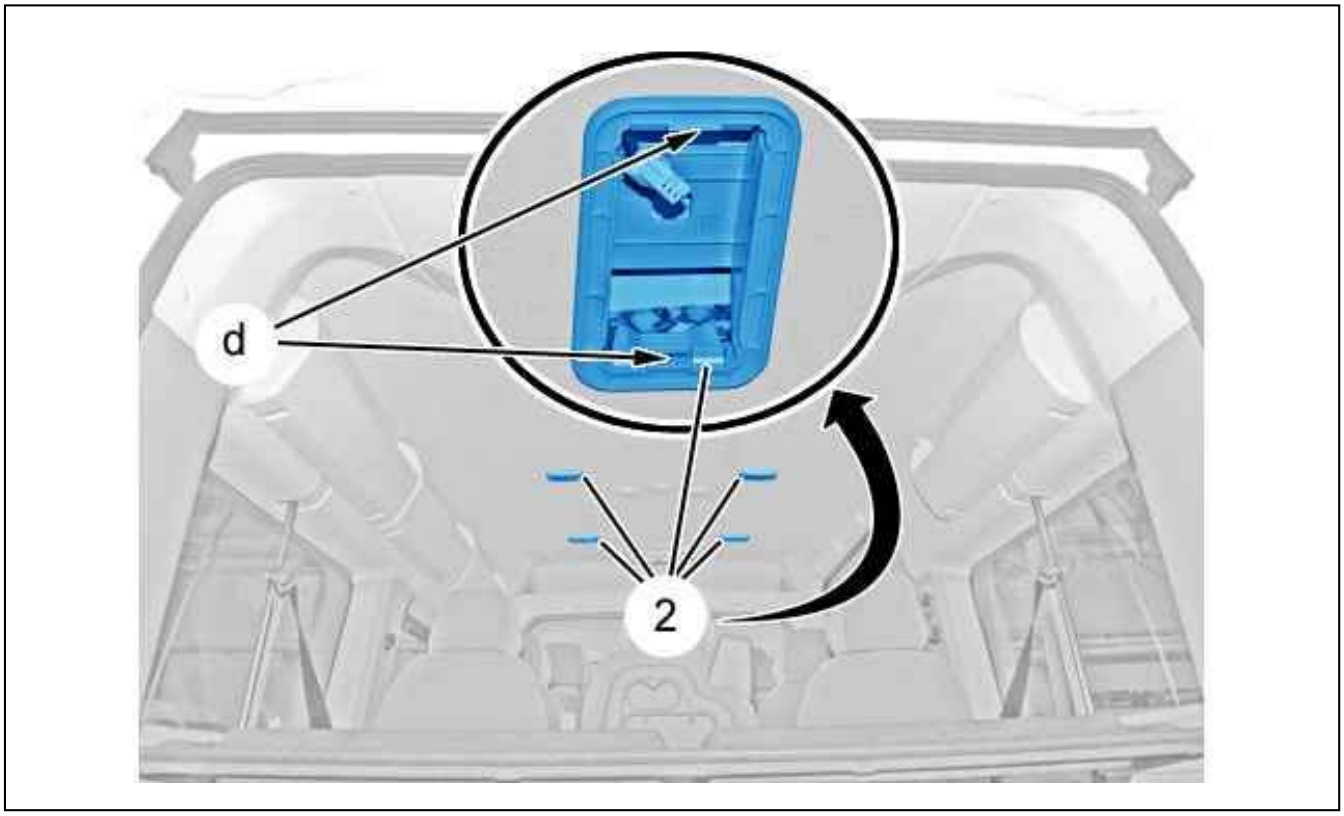

Figure : C5GM0D5D

Unclip (at "d") ; Using tool [1].
Remove the supports (2) (Courtesy light lamps).

3. Refitting

Proceed in the reverse order to removal.
Reconnect the battery.
Check the electrical operation of the equipment.

REMOVING - REFITTING : TAIL LAMP

ESSENTIAL : Observe the safety and cleanliness recommendations .

1. Recommended tools

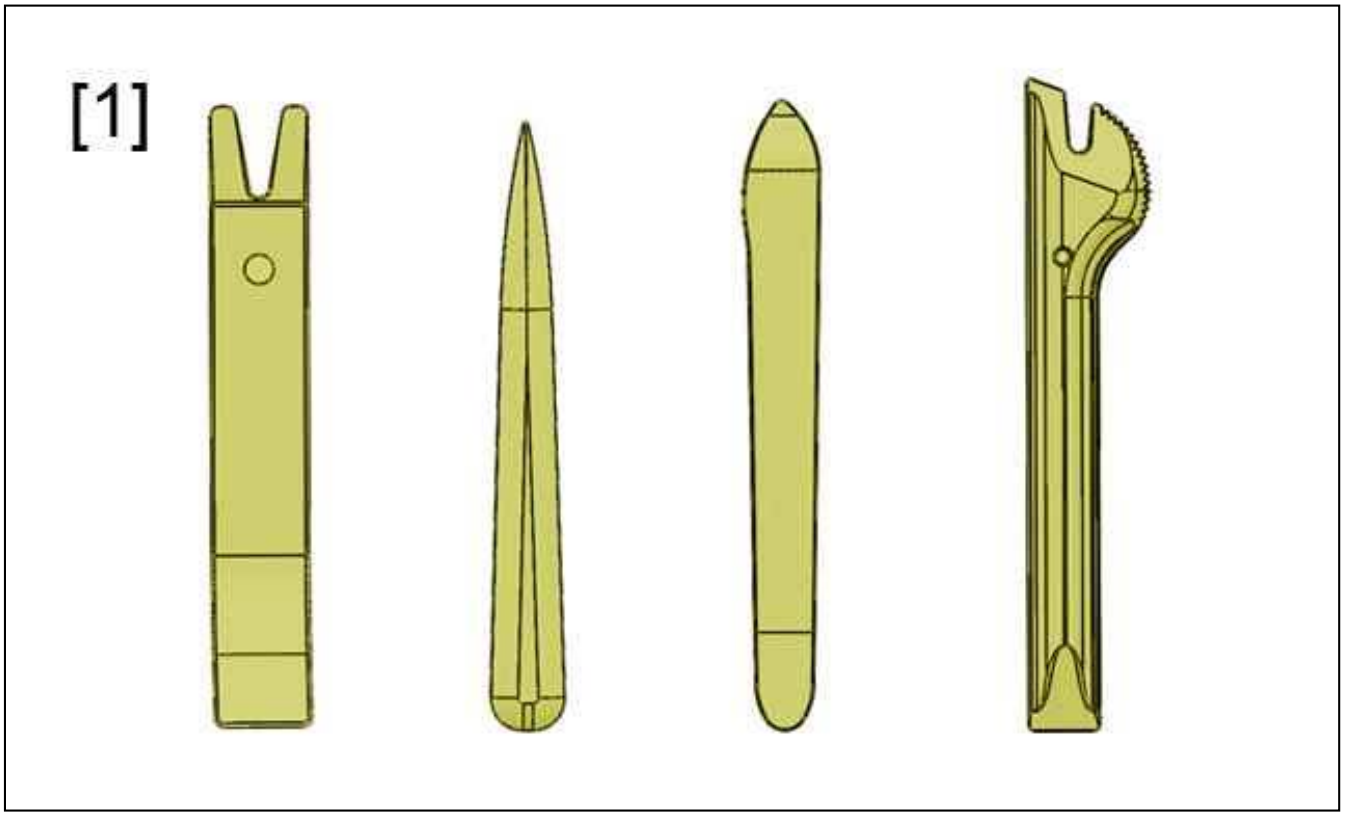

Figure : E5AP30WD

[1] Stripping tools (-).1350.

2. Removing



Figure : C5EGXYCD

(1) Tail lamp.
Open the hinged rear door.

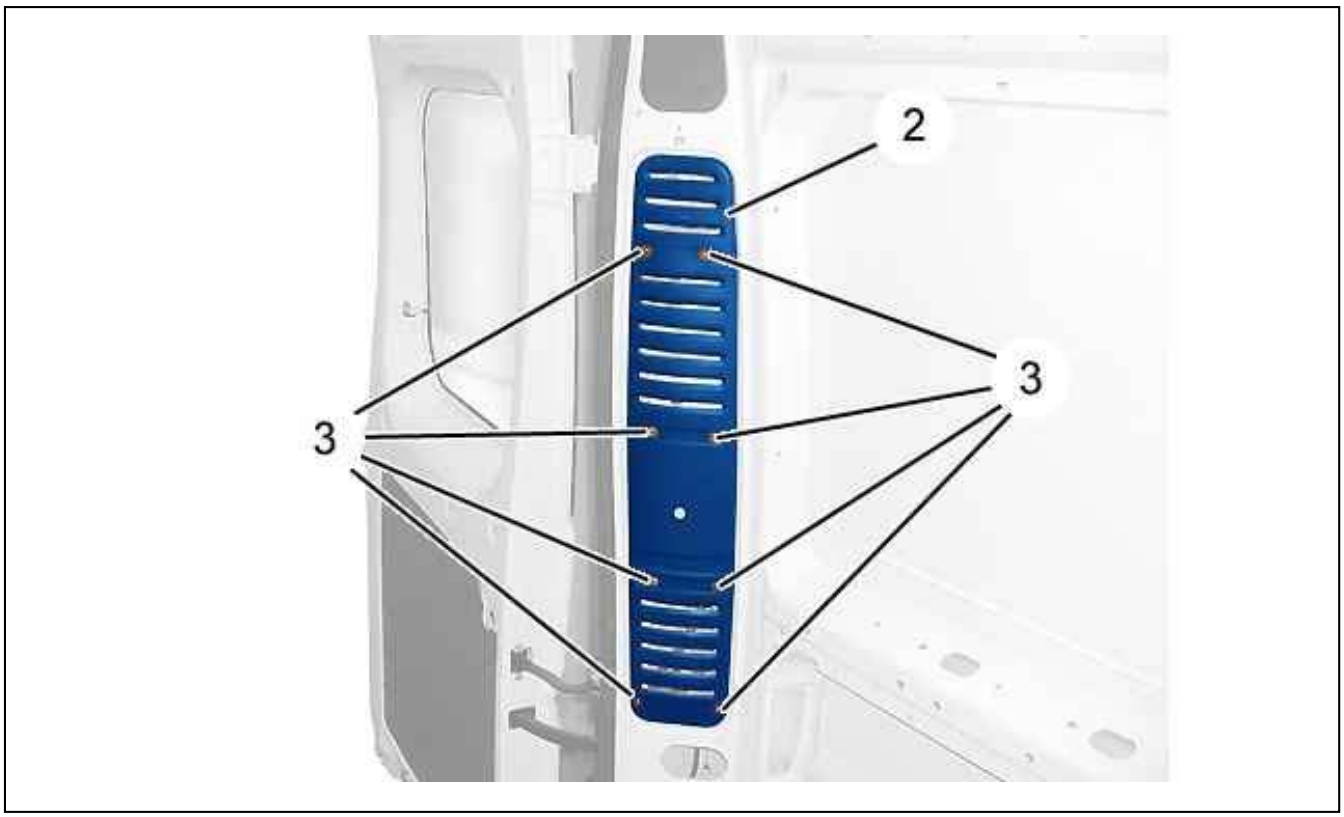

Figure : C5EGXYDD

Remove :

- The bolts (3)
- The trim (2)

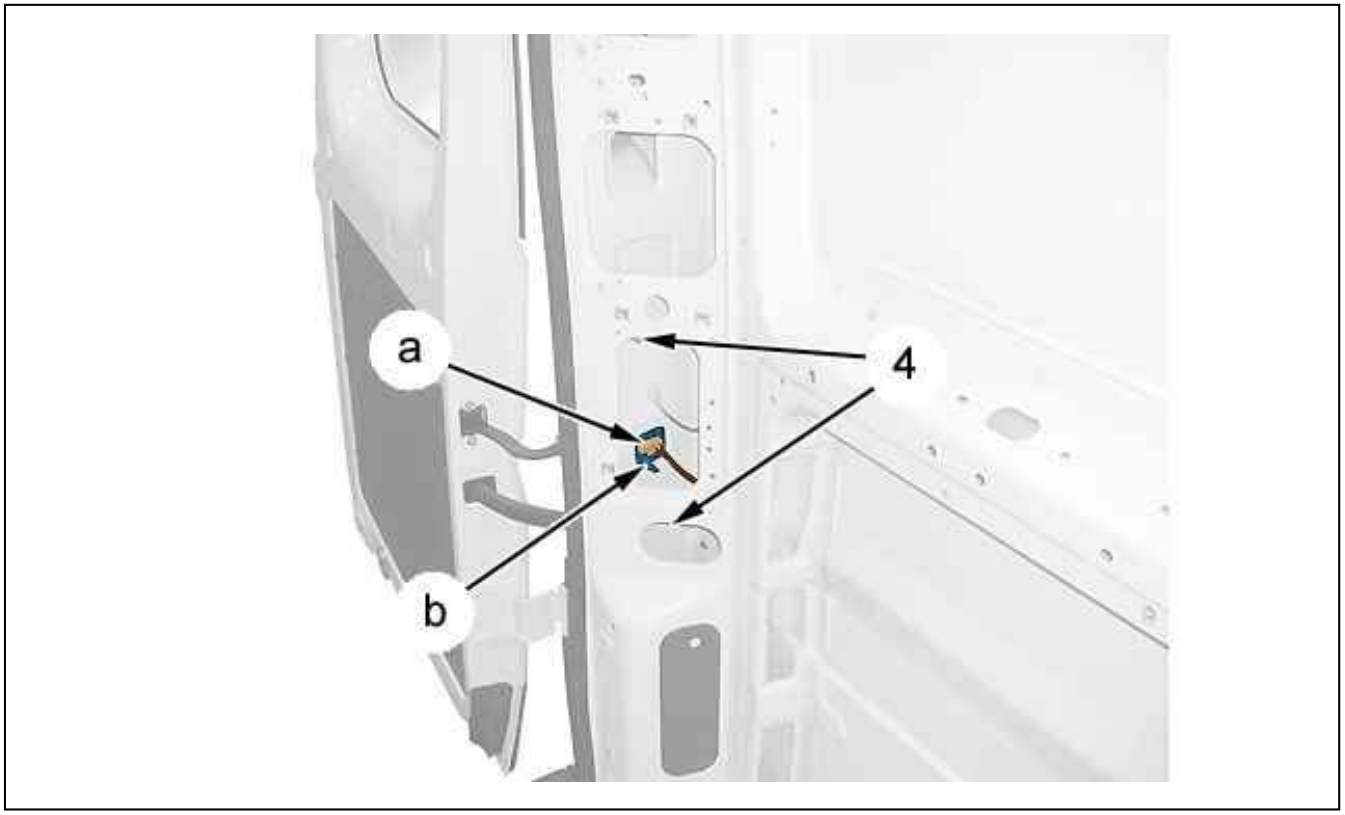

Figure : C5EGXYED

Remove the mountings (4).
Disconnect the connector (at "a").
Unclip (at "b") ; Using tool [1].
Detach then remove : The rear lamp (1).

3. Refitting

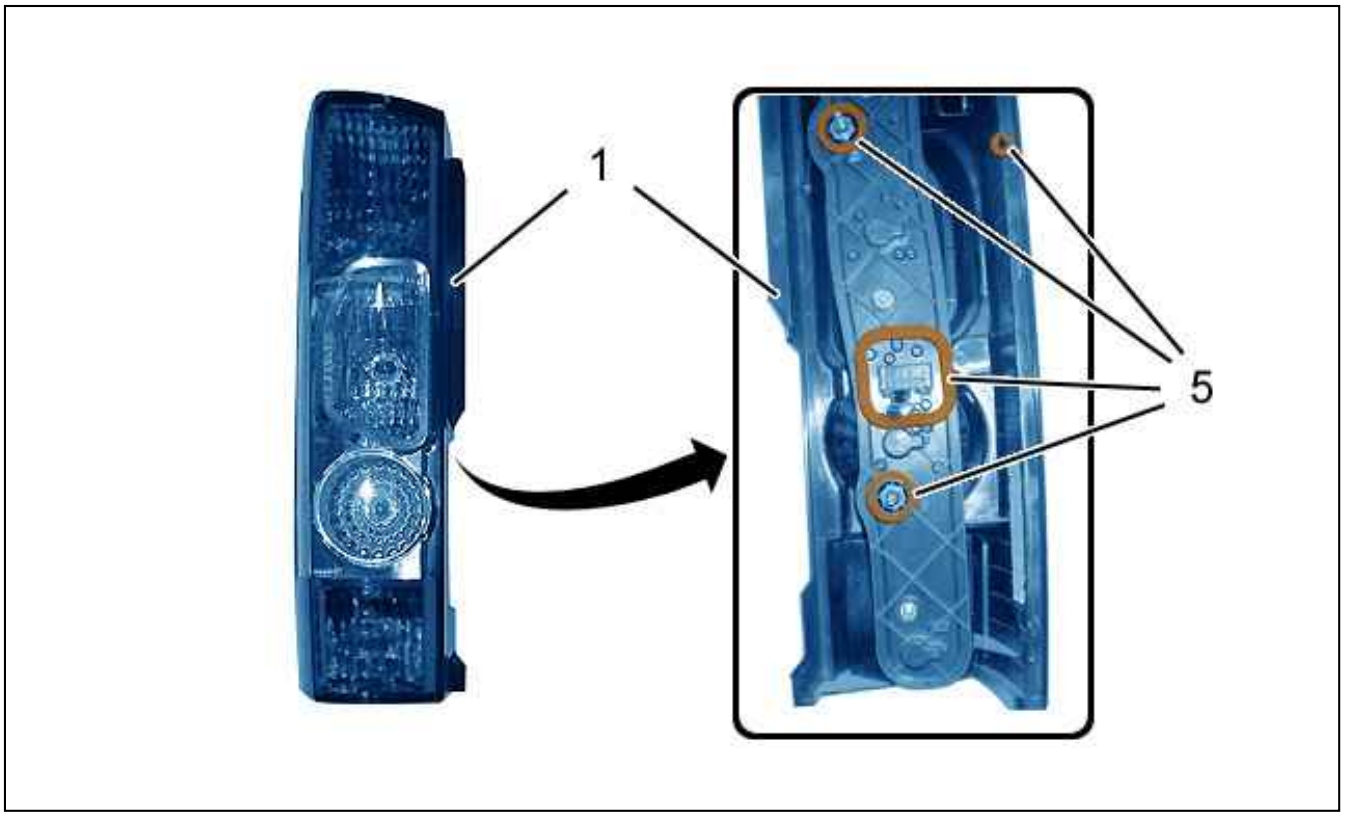

Figure : C5EGXYFD

ESSENTIAL : Check the condition and the positioning of the sealing pads (5).

Refit the rear lamp unit (1).
Connect the connector (at "a").
Verify :

- The sealing of the rear lamp unit
- That all the bulbs are working

Proceed in the reverse order to removal.

OVERHAUL : POLYCARBONATE HEADLAMP GLASS

ESSENTIAL : Observe the safety and cleanliness recommendations .

1. Equipment

Tool	Reference	Designation
 Figure : E5AB1L2T	[1607432380]	Headlamp renovation kit

2. Opaque polycarbonate headlamp glass

2.1. Preparation

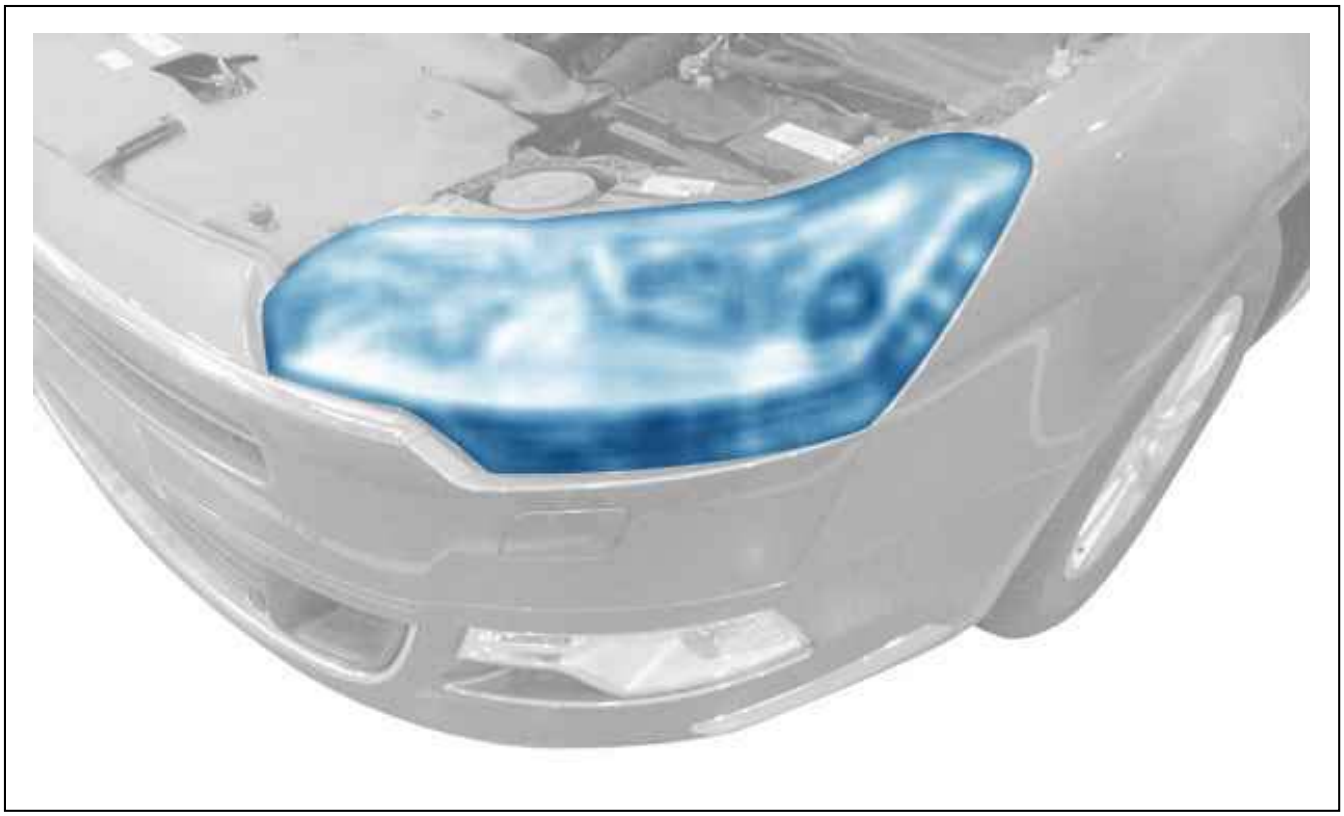

Figure : C5EM08PD

Clean the headlamp and the adjacent components ; Using an approved degreasing product.

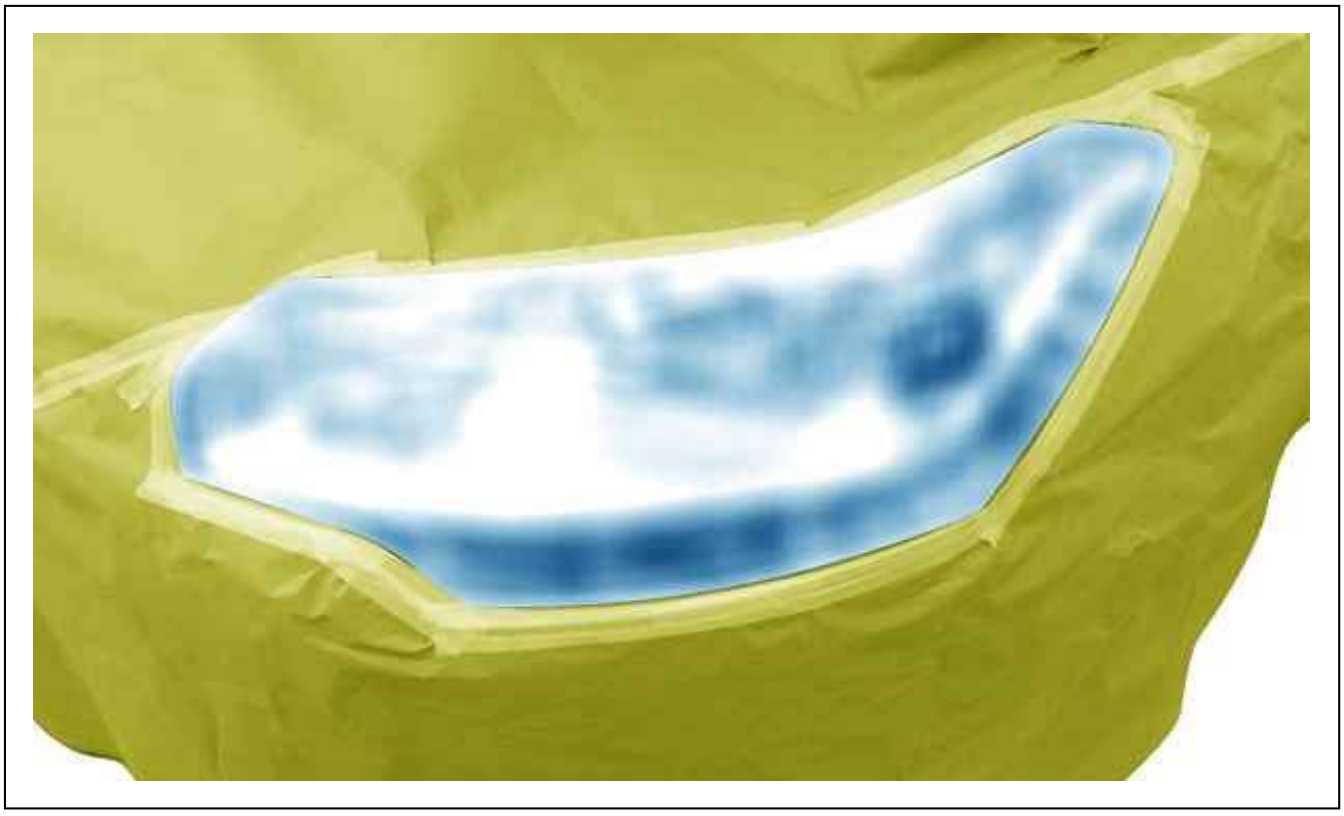

Figure : C5EM08QD

Protect the vehicle.

2.2. Renovation of the polycarbonate headlamp glass



Figure : C5EM08RD

Apply then spread product N° 1 over all of the polycarbonate headlamp glass.
Polish the polycarbonate headlamp glass ; Using the buffer fitted with the green polishing foam.
Finish the polishing ; Using a soft cloth.
Check the result of the operation.

N.B. : Repeat the operation if necessary.



Figure : C5EM08SD

Apply then spread product N° 2 over all of the polycarbonate headlamp glass.
Buff the polycarbonate headlamp glass ; Using the buffer fitted with the yellow buffing foam.
Check the result of the operation.

N.B. : Repeat the operation if necessary.

Remove the protectors.

3. Scratched polycarbonate headlamp glass

3.1. Preparation

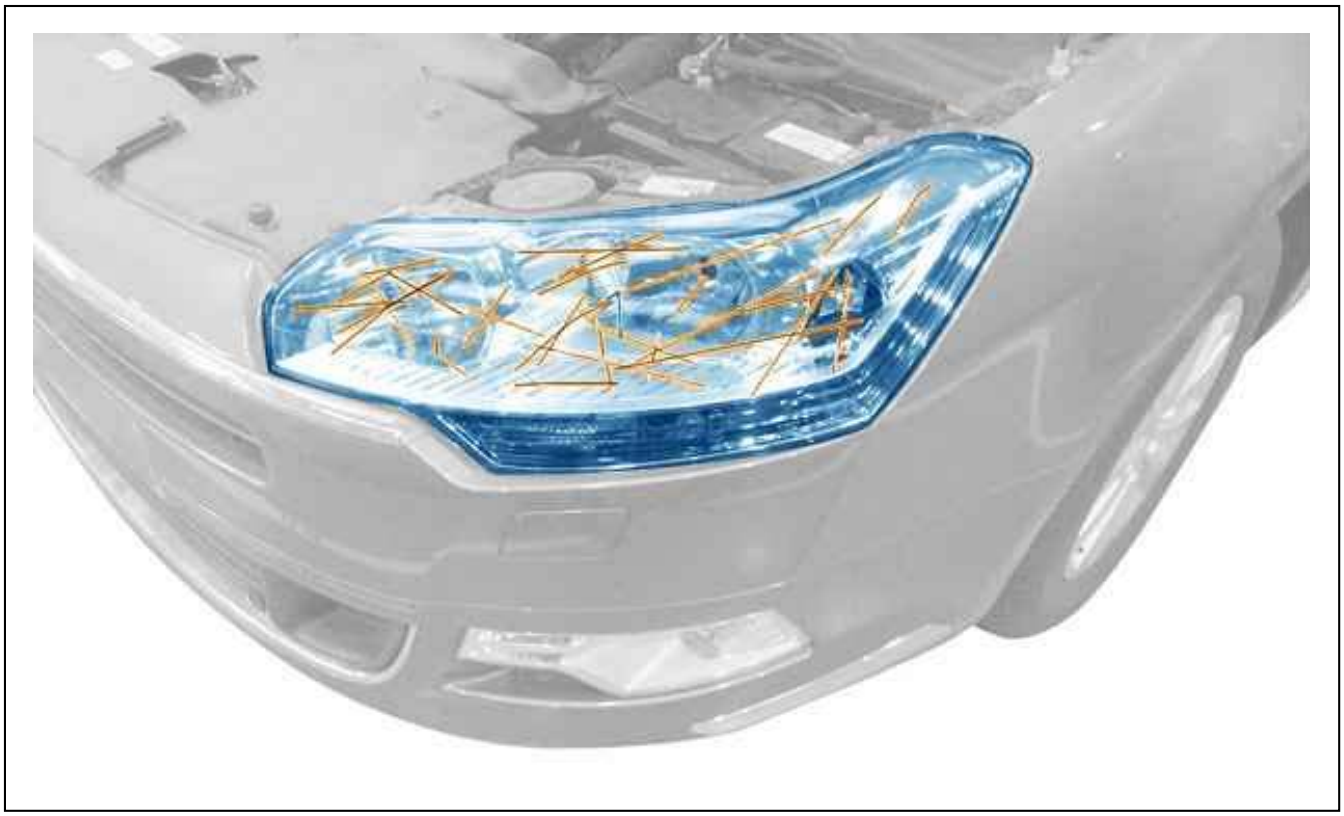

Figure : C5EM08TD

Clean the headlamp and the adjacent components ; Using an approved degreasing product.

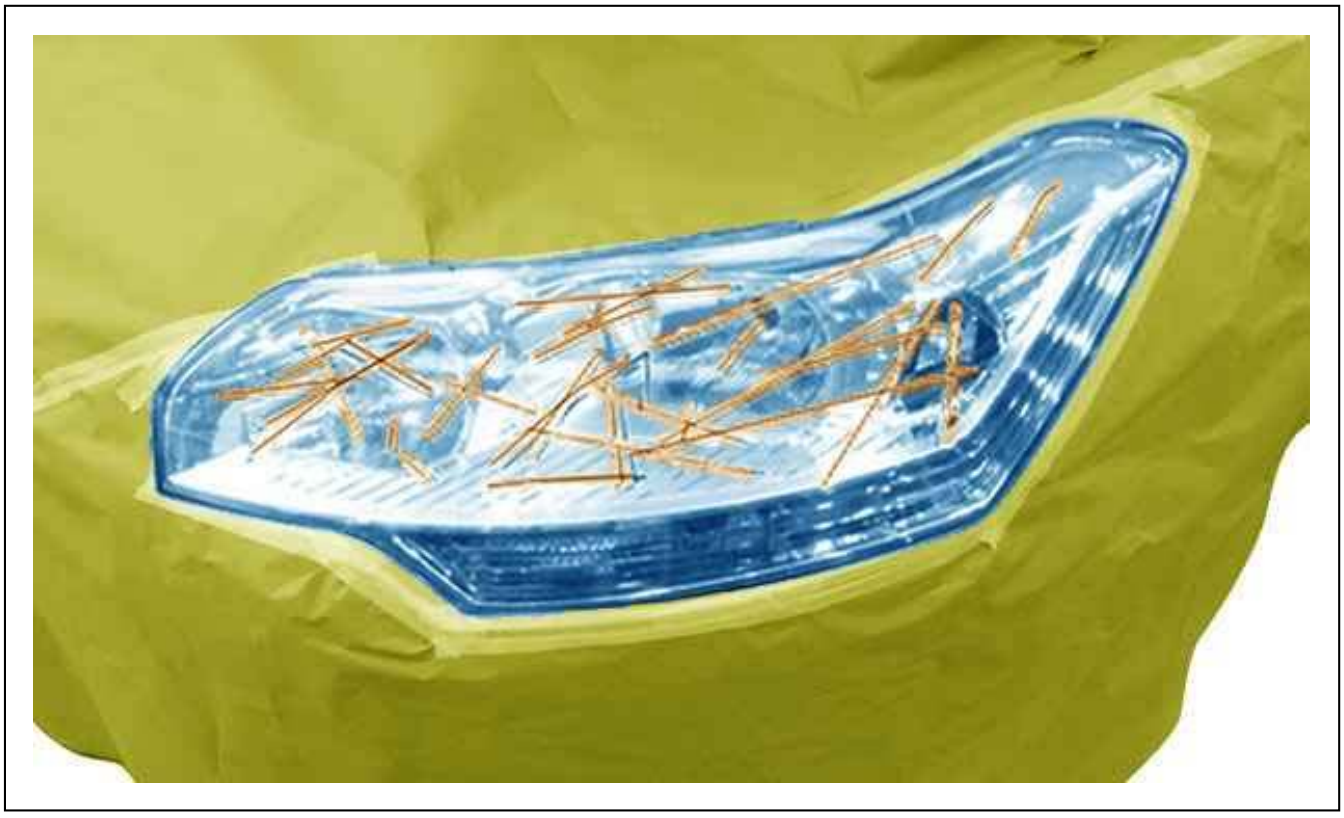

Figure : C5EM08UD

Protect the vehicle.

3.2. Sanding of the polycarbonate headlamp glass

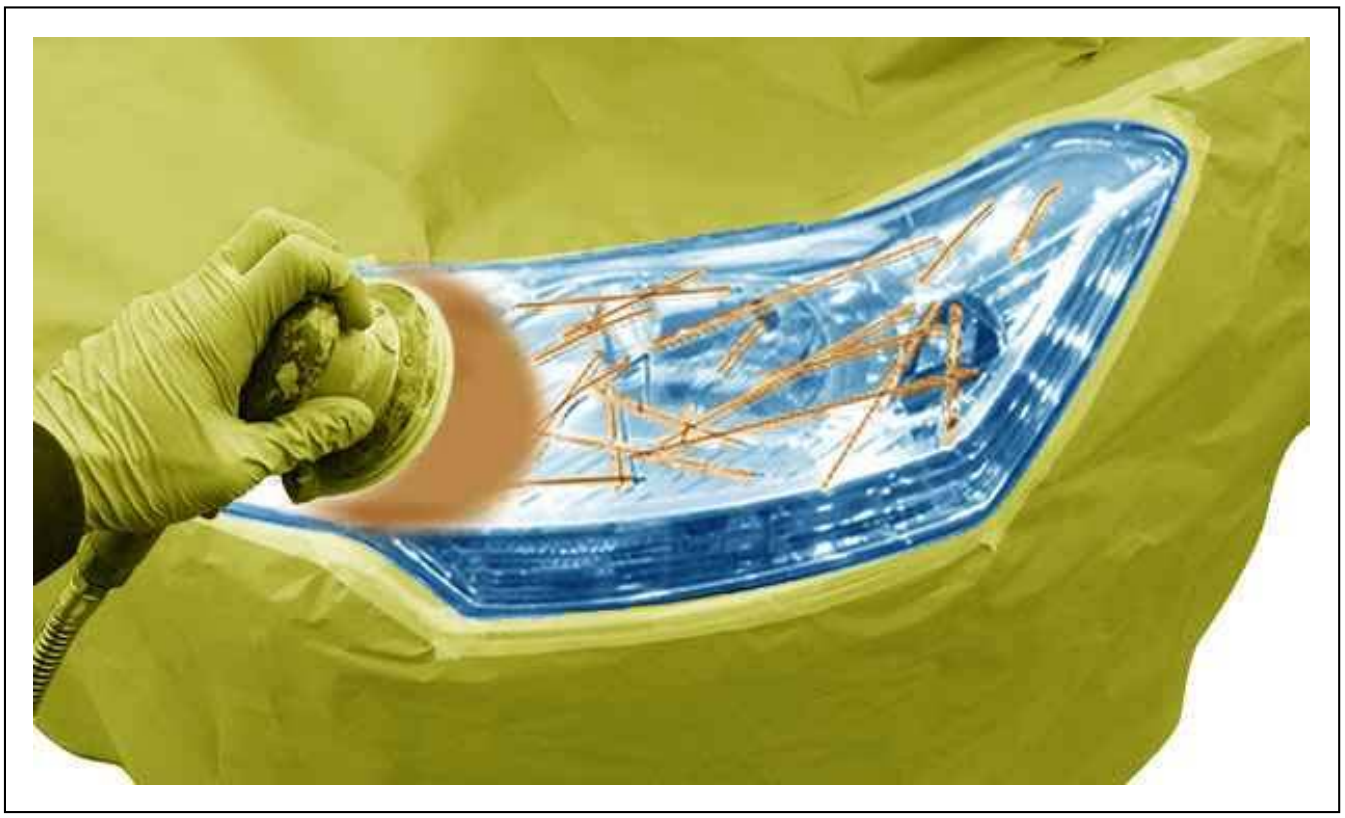

Figure : C5EM08VD

Sand the damaged area until the scratches have been eliminated ; Using the sander and abrasive paper P500 dry.



Figure : C5EM08WD

Sand, by successive sanding operations, the original varnish over all of the polycarbonate headlamp glass ; Using the sander fitted with a foam interface, starting with abrasive paper P500 then P800 dry.

N.B. : After using abrasive paper P800 dry, check that the original varnish and/or any micro-scratches have beer eliminated completely.



Figure : C5EM08XD

Finish with finishing sanding (successive sanding operations) of all of the polycarbonate glass using fine abrasive paper P1000 then P3000 with water ; Using the sander fitted with a foam interface.
Check the result of the operation.

N.B. : Repeat the operation if necessary.



Figure : C5EM08YD

Apply then spread product N° 1 over all of the polycarbonate headlamp glass.
Polish the polycarbonate headlamp glass ; Using the buffer fitted with the green polishing foam.
Finish the polishing ; Using a soft cloth.
Check the result of the operation.

N.B. : Repeat the operation if necessary.



Figure : C5EM08ZD

Apply then spread product N° 2 over all of the polycarbonate headlamp glass.
Buff the polycarbonate headlamp glass ; Using the buffer fitted with the yellow buffing foam.
Check the result of the operation.

N.B. : Repeat the operation if necessary.

Remove the protectors.

REMOVING - REFITTING : ANCILLARY DRIVE BELT

ESSENTIAL : Observe the safety and cleanliness recommendations .

1. Tooling

tool	Reference	Designation
 Figure : E5AB153T	[0198-P]	flywheel stop
 Figure : E5AB154T	[0198-E]	Centraliser x2
	[0198-M1]	Crankshaft drive tool
	[0198-M2]	Crankshaft drive tool bolt

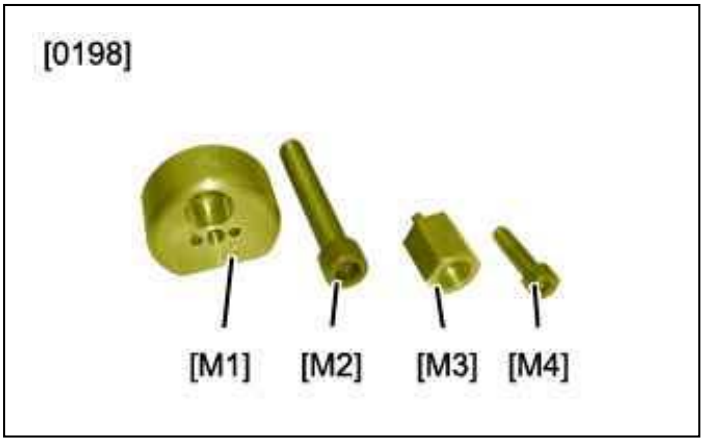 Figure : E5AB0LTT	[0198-M3]	Crankshaft driver
	[0198-M4]	Crankshaft drive tool bolt
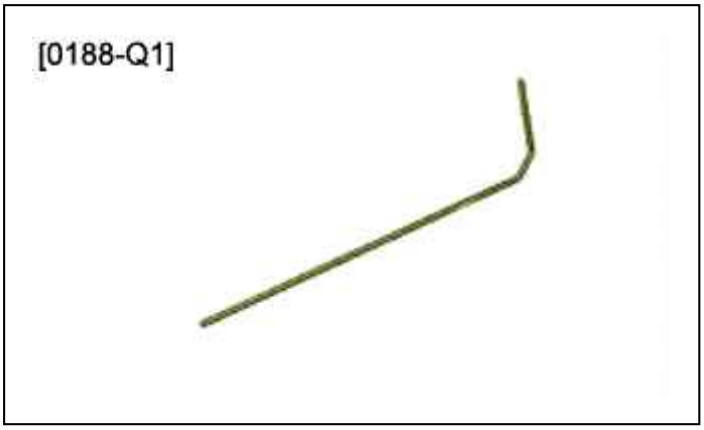 Figure : E5AB05JT	[0188-Q1]	Dynamic roller tensioner pins
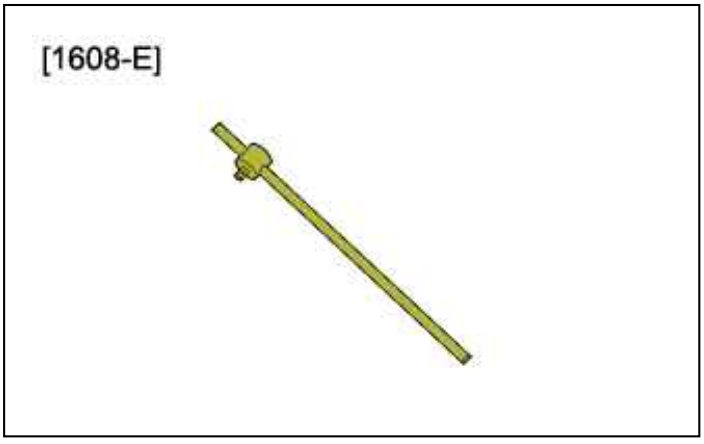 Figure : E5AB0C9T	[1608-E]	T piece extension

2. Removing

2.1. Common operations

CAUTION : Replace the torsional vibration damper double pulley for a distance travelled greater than or equal to 160000 km, when the accessories drive belt is replaced.

Place the vehicle on a 2-post lift.
Disconnect the battery negative terminal.
Remove :

- The protection plates under the engine
- The front right wheel

CAUTION : Prior to removal, and before any subsequent refitting of the ancillary drive belt that has been removed, it is compulsory for the engine to be at ambient temperature (Below 30 °C). In all other cases, replace the ancillary drive belt.

N.B. : Removing it with the engine hot causes irreversible and invisible damage to the ancillary drive belt.

CAUTION : If replacing it, cut and remove the ancillary drive belt.

CAUTION : Check that the tool [0198-P] is correctly positioned between two teeth of the flywheel; or turn the crankshaft to correctly position the tool.

Move aside and secure : The starter motor .

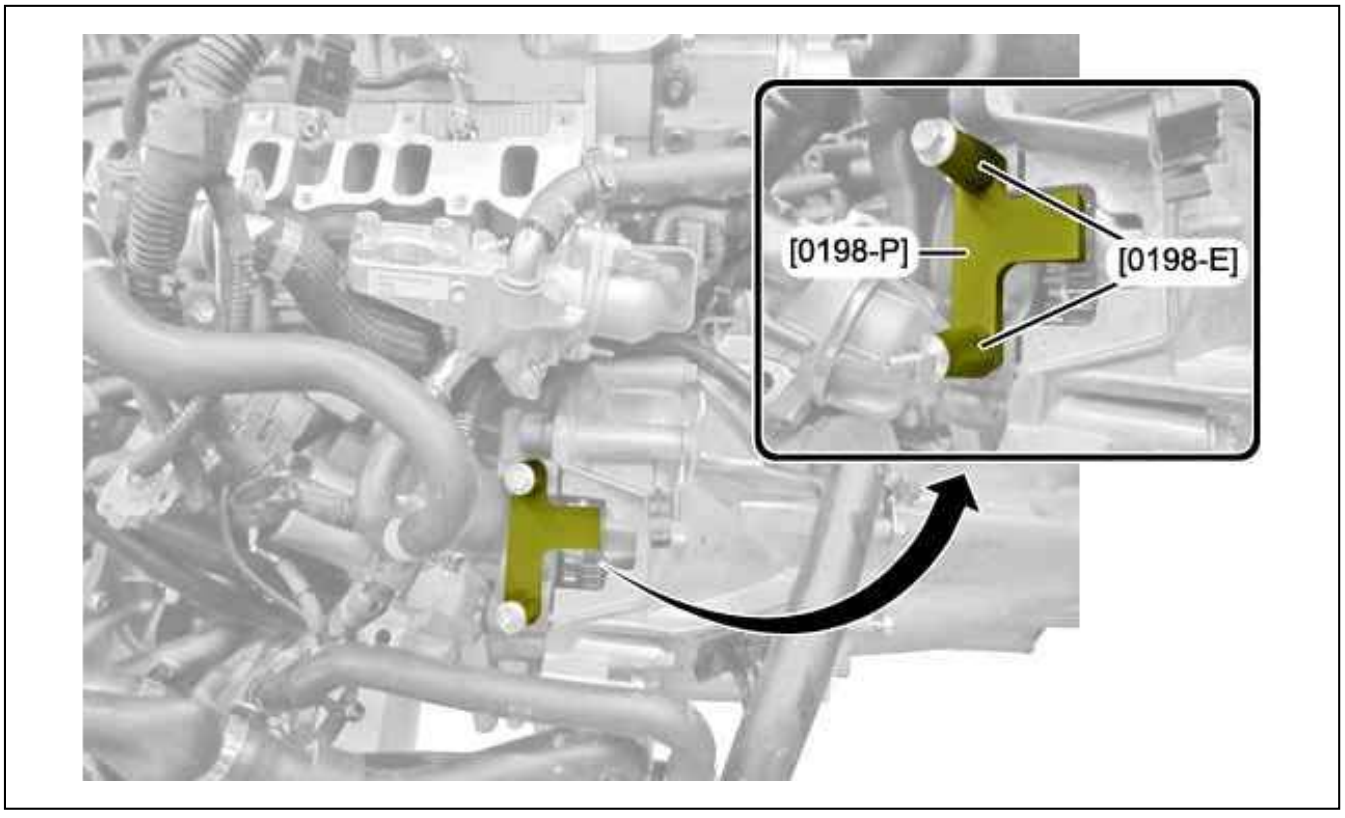

Figure : B1BG2YHD

Position the tools [0198-P], [0198-E].
Secure the assembly using the starter motor bolts.

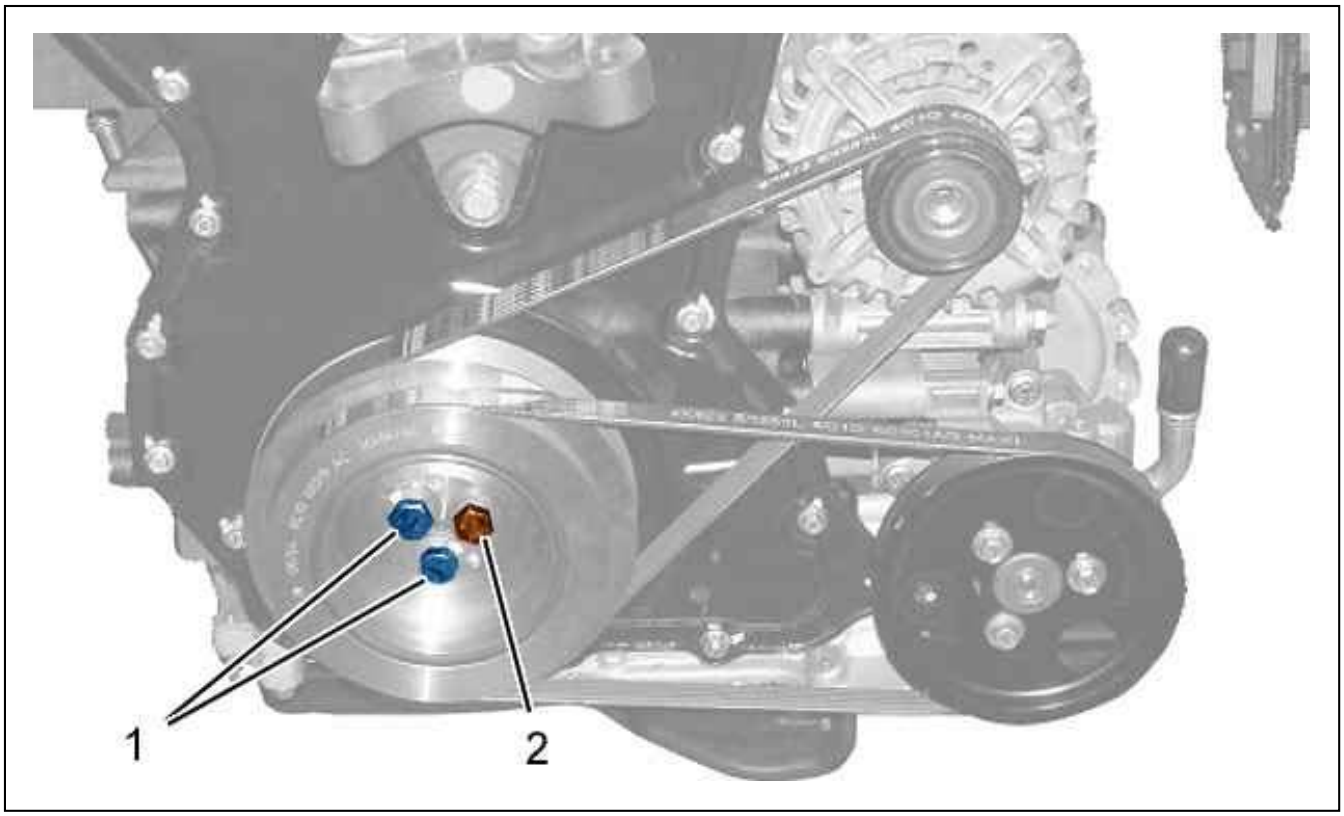

Figure : B1BPSHAD

Remove the accessories drive pulley fixing bolts (1).
Slacken the fixing bolt (2) of the ancillary drive pulley by 2 cm.

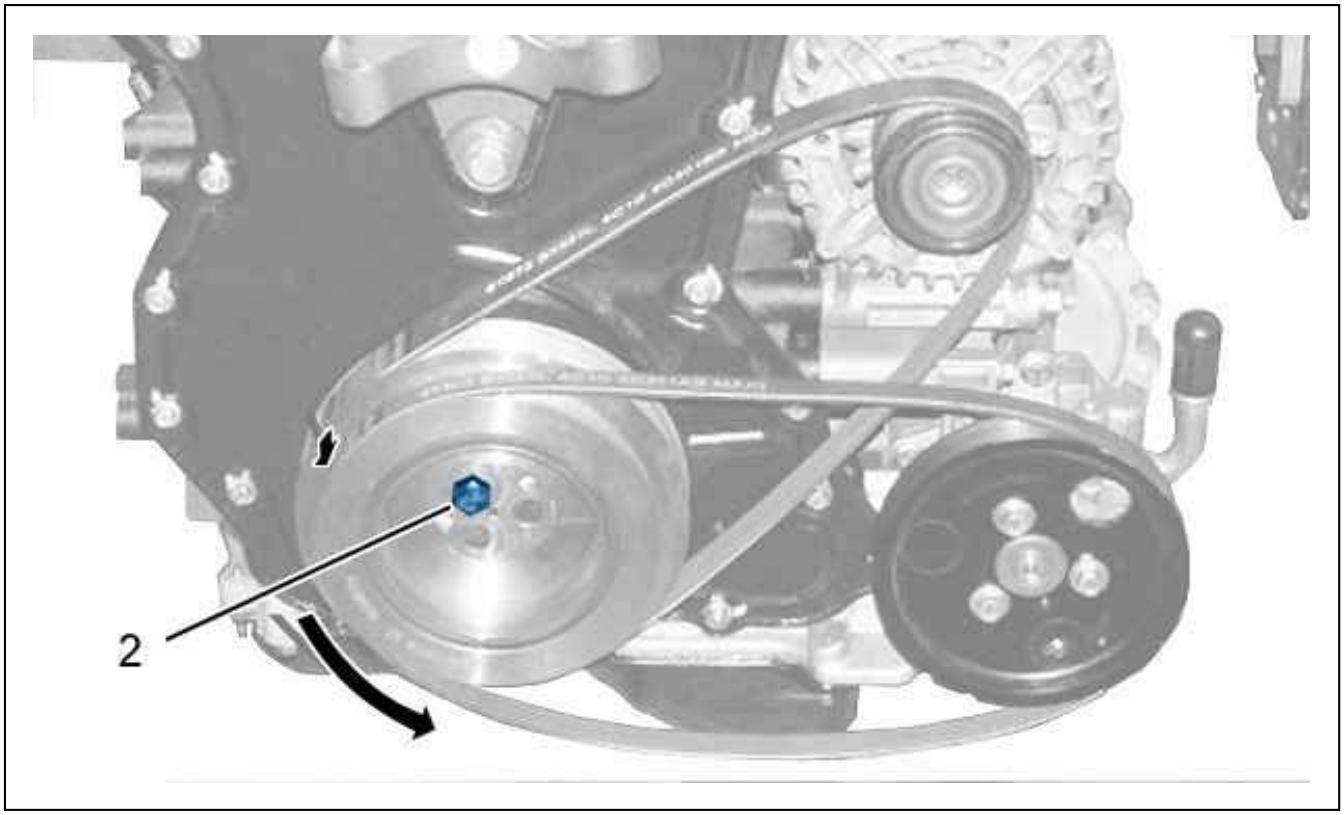

Figure : B1BPSHBD

Move aside the ancillary drive pulley, pivoting it on the fixing bolt (2).

CAUTION : Mark the direction of fitting of the accessories drive belts if they are to be reused.

Remove the accessory drive belts.

2.2. Vehicle with air conditioning

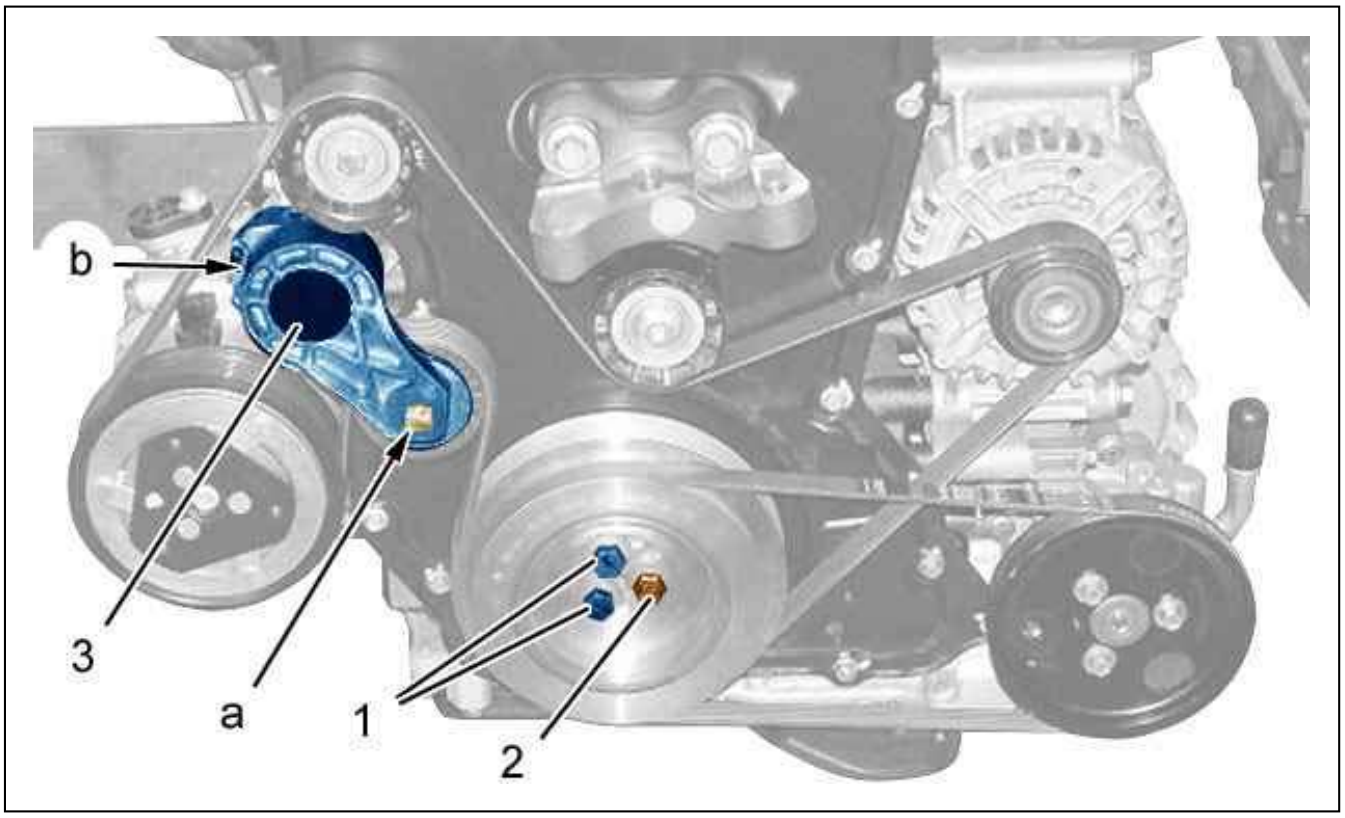

Figure : B1BPSHCD

Compress the dynamic roller tensioner (3) (as "a") (anti clockwise) ; Using tool [1608-E].
Peg (as "b") ; Using tool [0188-Q1].
Remove the accessories drive pulley fixing bolts (1).
Slacken the fixing bolt (2) of the ancillary drive pulley by 2 cm.

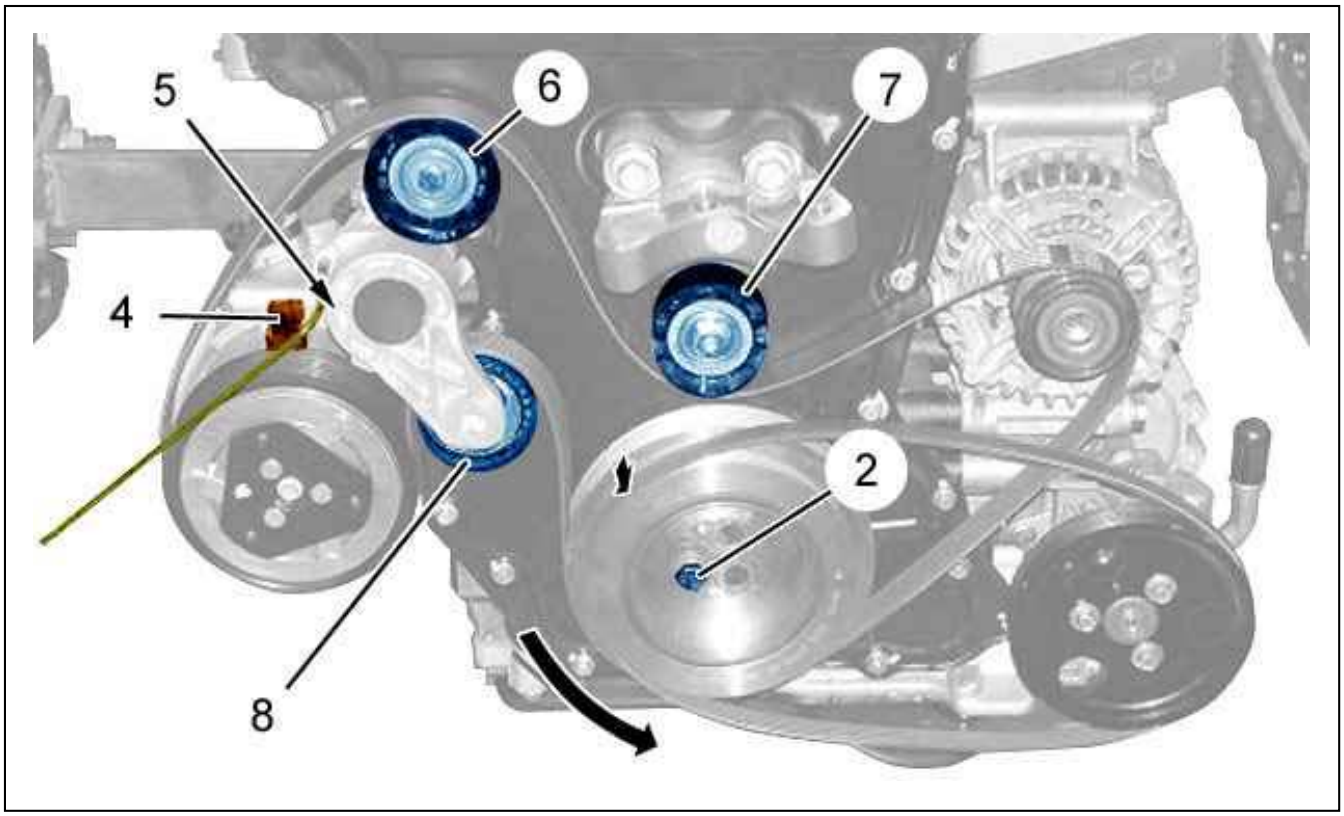

Figure : B1BPSHDD

CAUTION : Mark the direction of fitting of the accessories drive belts if they are to be reused.

Move aside the ancillary drive pulley, pivoting it on the fixing bolt (2).
Disconnect the air conditioning compressor connector (4); By means of a screwdriver.
Remove :

- The dynamic roller tensioner (3) fixing bolts (5)
- The dynamic roller tensioner (3)

CAUTION : Check that the rollers (6),(7) and (8) rotate freely (no play and no stiffness).

Remove the accessory drive belts.

3. Refitting

CAUTION : Adhere to the tightening torques .

CAUTION : Replace the torsional vibration damper double pulley for a distance travelled greater than or equal to 160000 km, when the accessories drive belt is replaced.

3.1. Vehicle with air conditioning

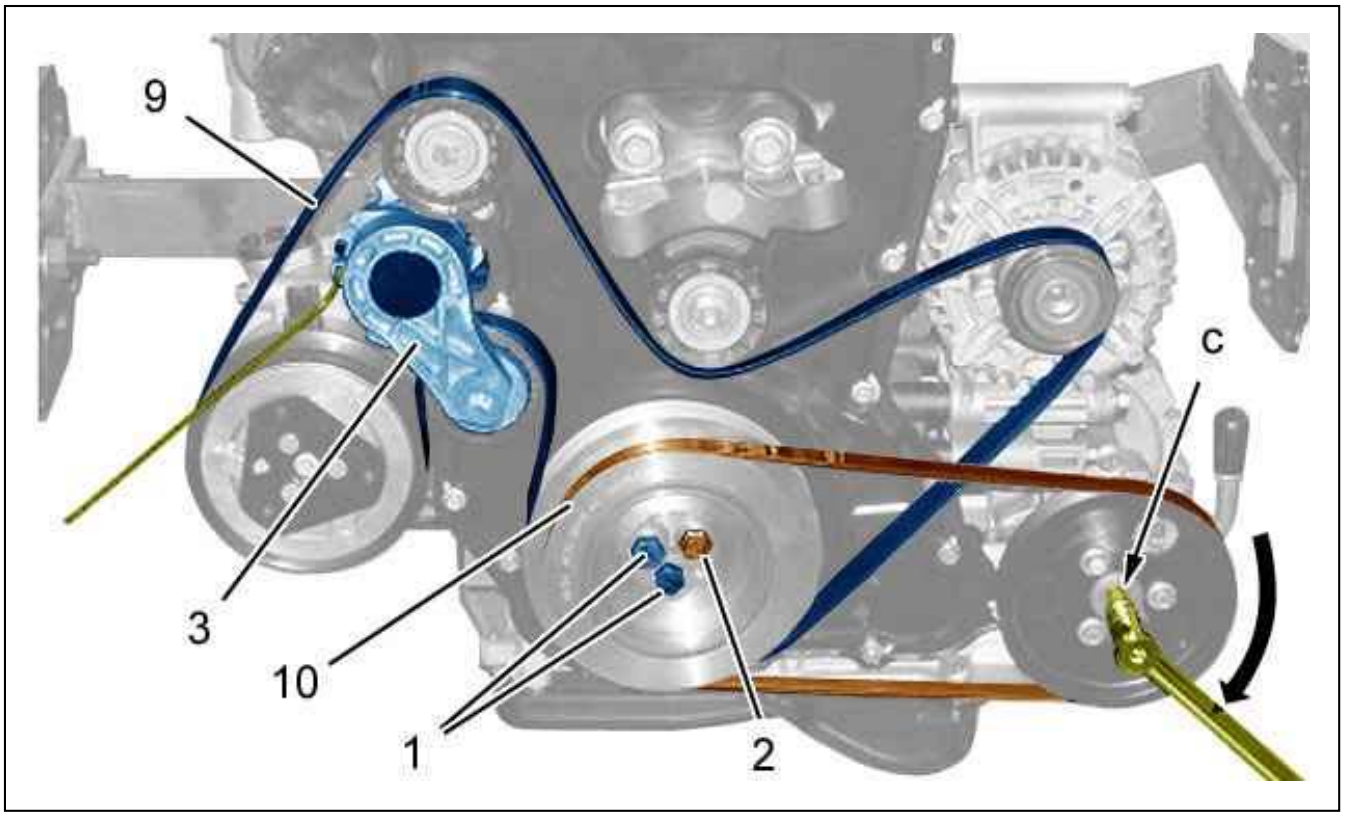

Figure : B1BPSHFD

CAUTION : Mark the direction of fitting of the accessories drive belts if they are to be reused.

CAUTION : Make sure that the ancillary drive belts (9) and (10) are correctly positioned in the grooves of the various ancillary drive pulleys.

Refit :

- The accessories drive belt (9) with the dynamic roller tensioner (3)
- The dynamic roller tensioner (3) fixing bolts (5)
- The accessories drive belt (10)

Turn the power steering pump pulley ; Using a spanner (as "c") (In the direction of the arrow).
Guide the accessories drive pulley by hand.
Maintain the effort (as "c") (In the direction of the arrow).
Refit the fixing screws (1).
Tighten the fixing bolts (1), (2) to the correct torque.
Remove the spanner (as "c").

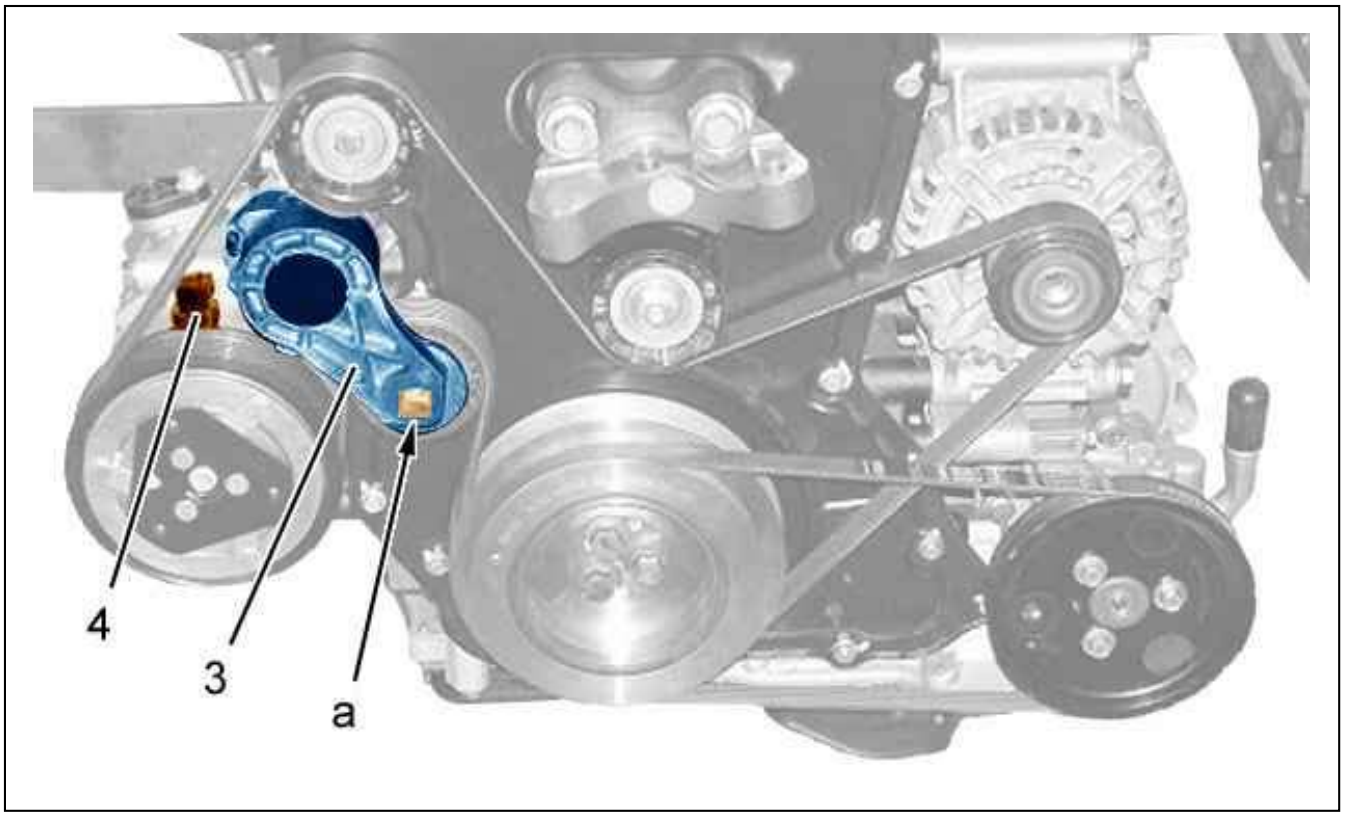

Figure : B1BPSHGD

Compress the dynamic roller tensioner (3) (as "a") (anti clockwise) ; Using tool [1608-E].
Remove the tool [0188-Q1].
Connect the air conditioning compressor connector (4).

3.2. Common operations

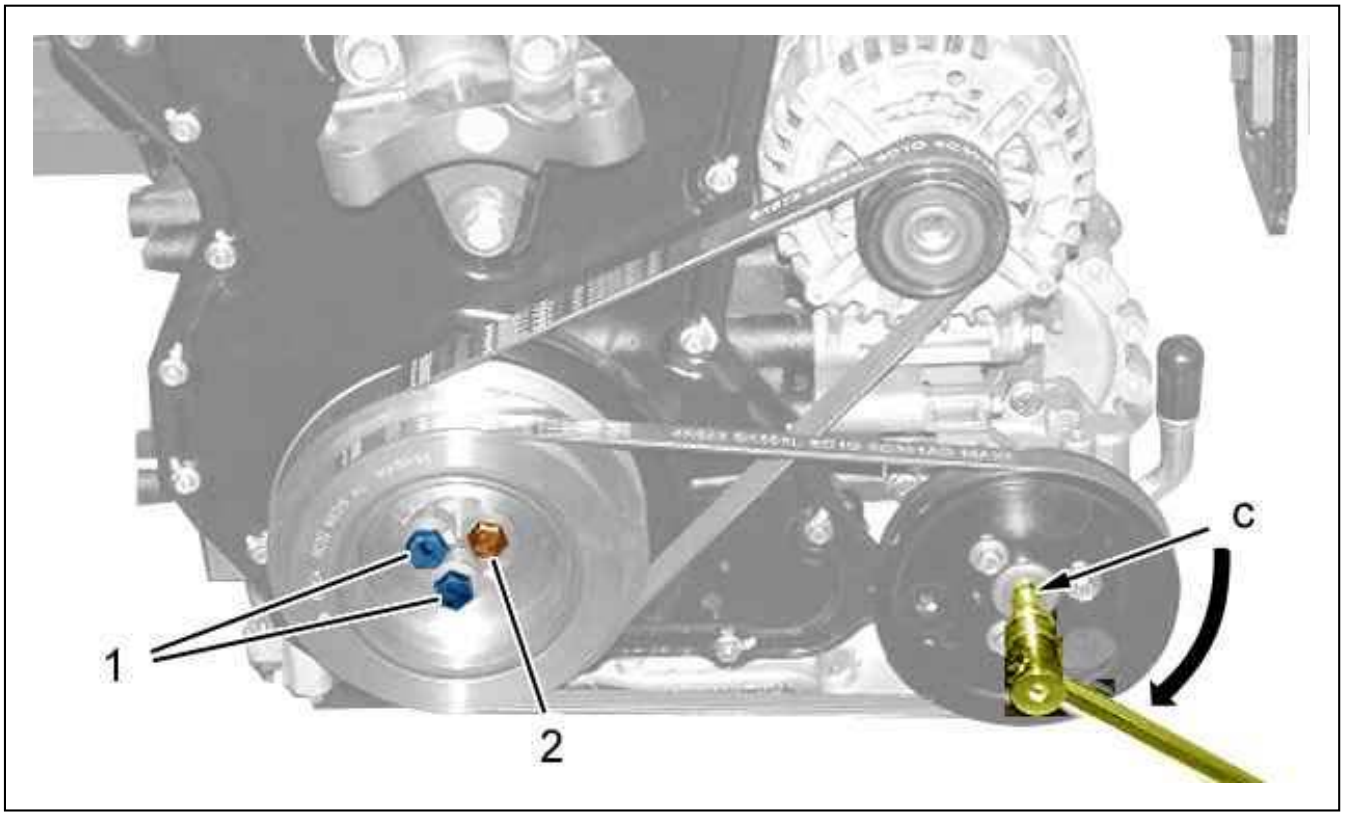

Figure : B1BPSHED

CAUTION : Mark the direction of fitting of the accessories drive belts if they are to be reused.

CAUTION : Always make sure that the ancillary drive belts are correctly positioned in the grooves of the various ancillary drive pulleys.

Refit the accessories drive belts .
Turn the power steering pump pulley ; Using a spanner (as "c") (In the direction of the arrow).
Guide the accessories drive pulley by hand.
Maintain the effort (as "c") (In the direction of the arrow).
Refit the fixing screws (1).
Tighten the fixing bolts (1), (2) to the correct torque.
Remove the spanner (as "c").
Remove the tools [0198-P], [0198-E].
Refit the starter .

4. Verification

Remove one accessories drive pulley fixing bolt .
Set the gearbox in neutral.

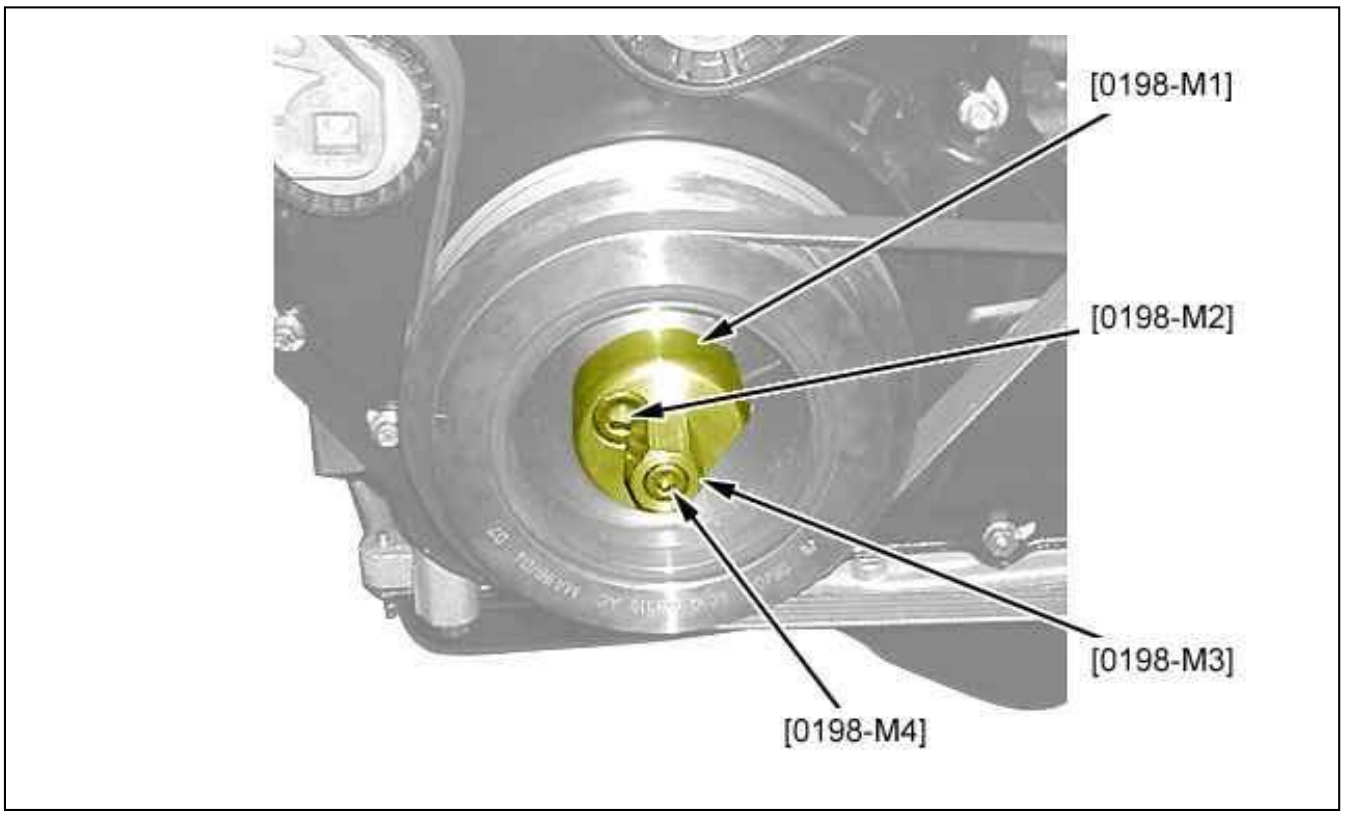

Figure : B1BG1DUD

Fit the tool [0198-M1].
Secure the tool [0198-M1] ; Using the screws [0198-M2].
Fit the tool [0198-M3].
Tighten the bolt [0198-M4] .
Rotate the crankshaft clockwise ; Check that the accessories drive pulley is not warped.
Engage 1st gear.
Remove the tools [0198].

Refit the fixing bolt of the ancillary drive pulley ; Tighten to the specified torque.
Refit :

- The protection plates under the engine
- The front right wheel

CAUTION : Perform the operations to be carried out following reconnection of the battery.

Reconnect the battery negative terminal.

REMOVING - REFITTING : STEERING MECHANISM

ESSENTIAL : Observe the safety and cleanliness recommendations .

1. Tooling

Equipment : Lifting tool .

tool	Reference	Designation
[0919] 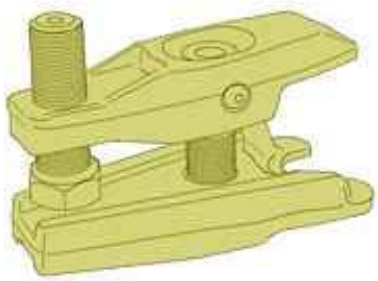 Figure : E5AB0ZPT	[0919]	ball-joint extractor

2. Removing

Disconnect the battery negative terminal.
Untighten the wheel screws (front).
Lift and support the front of the vehicle.
Remove :

- The front wheels
- The protection plates under the engine

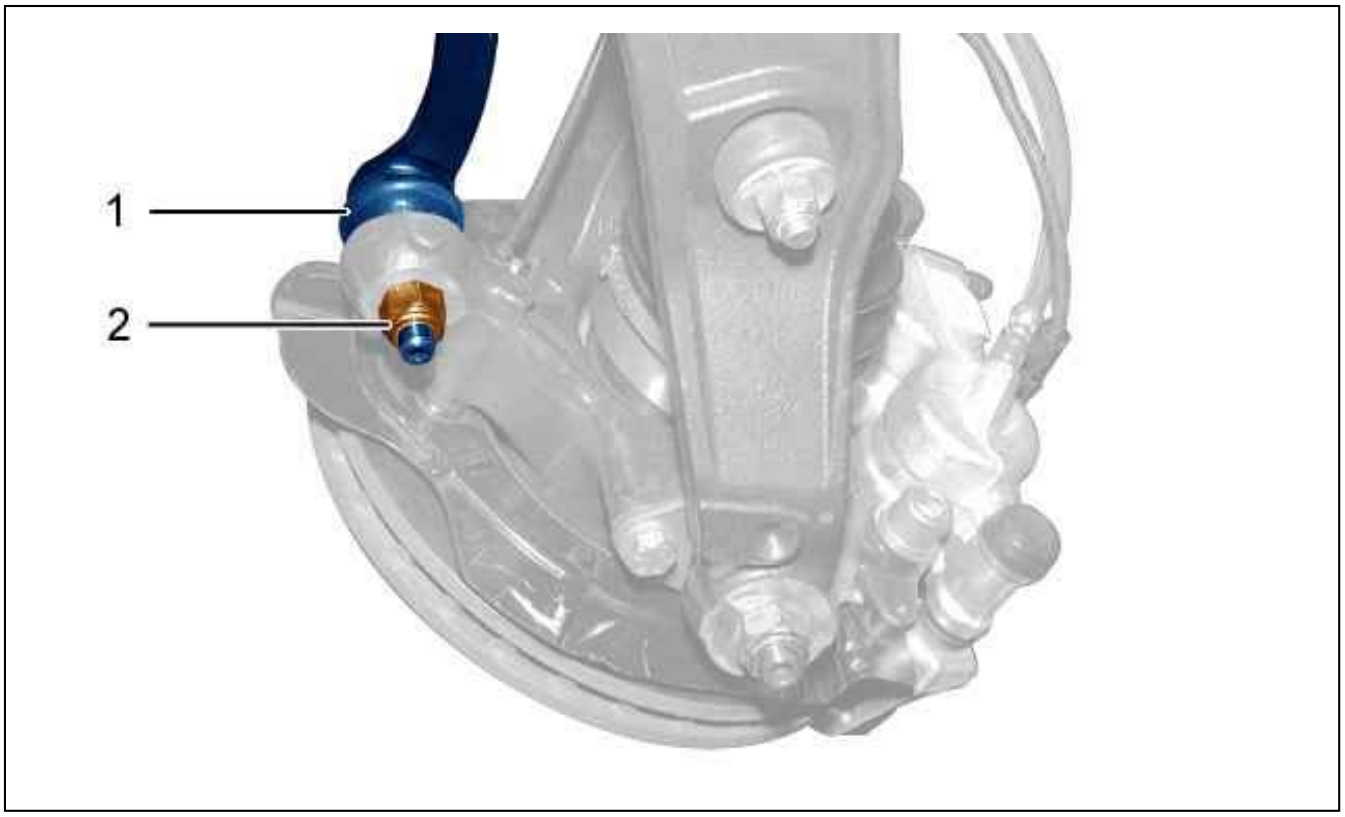

Figure : B3EG0JQD

Remove the nut (2) (on each side).
Uncouple the steering ball-joint (1) ; Using tool [0919] (on each side).

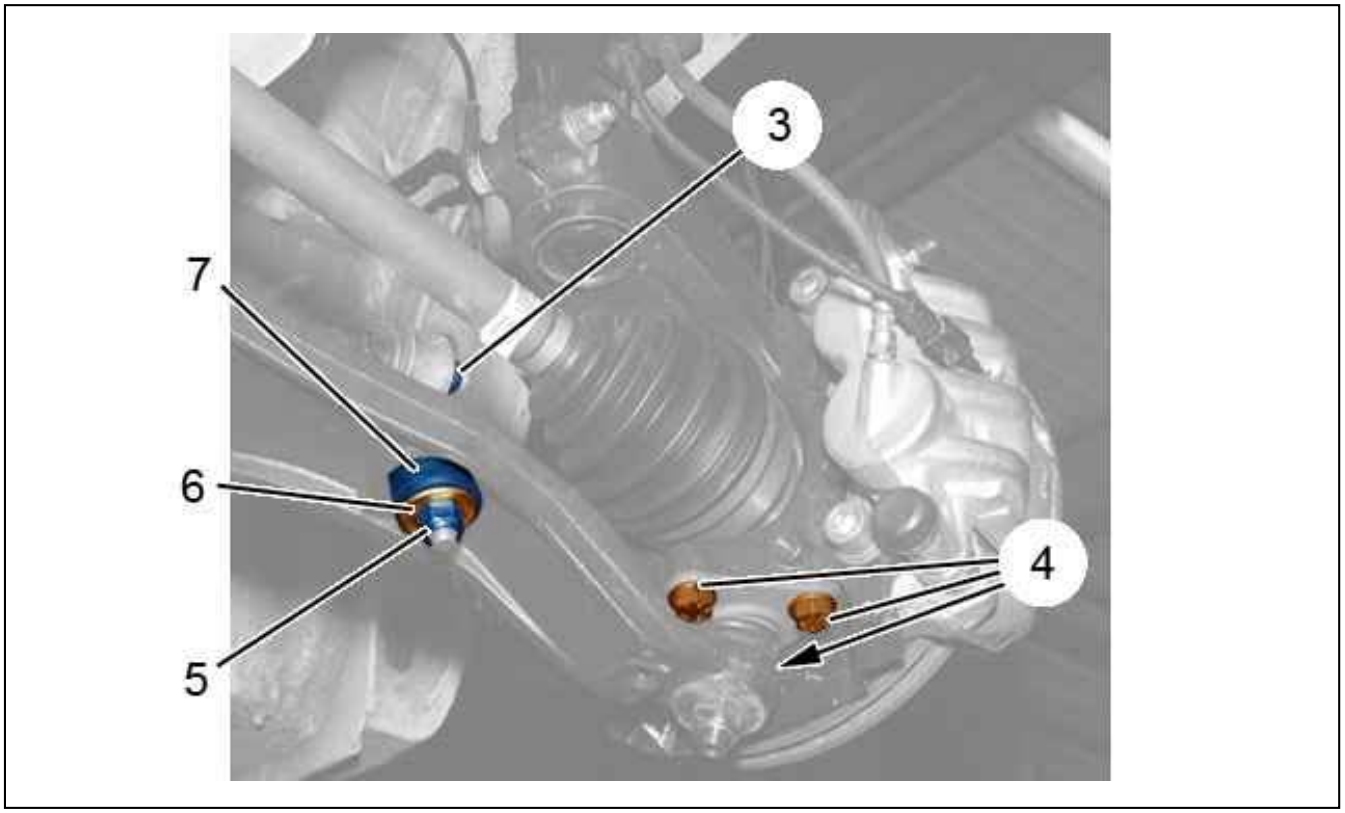

Figure : B3BP1CPD

Unscrew nut (3) (on each side).

Remove (on each side) :

- The nut (5)
- The washer (6)
- The silentblock (7)
- The 3 bolts (4)

Release : The pivot lower ball-joint (on each side).
Drain the steering assistance circuit .

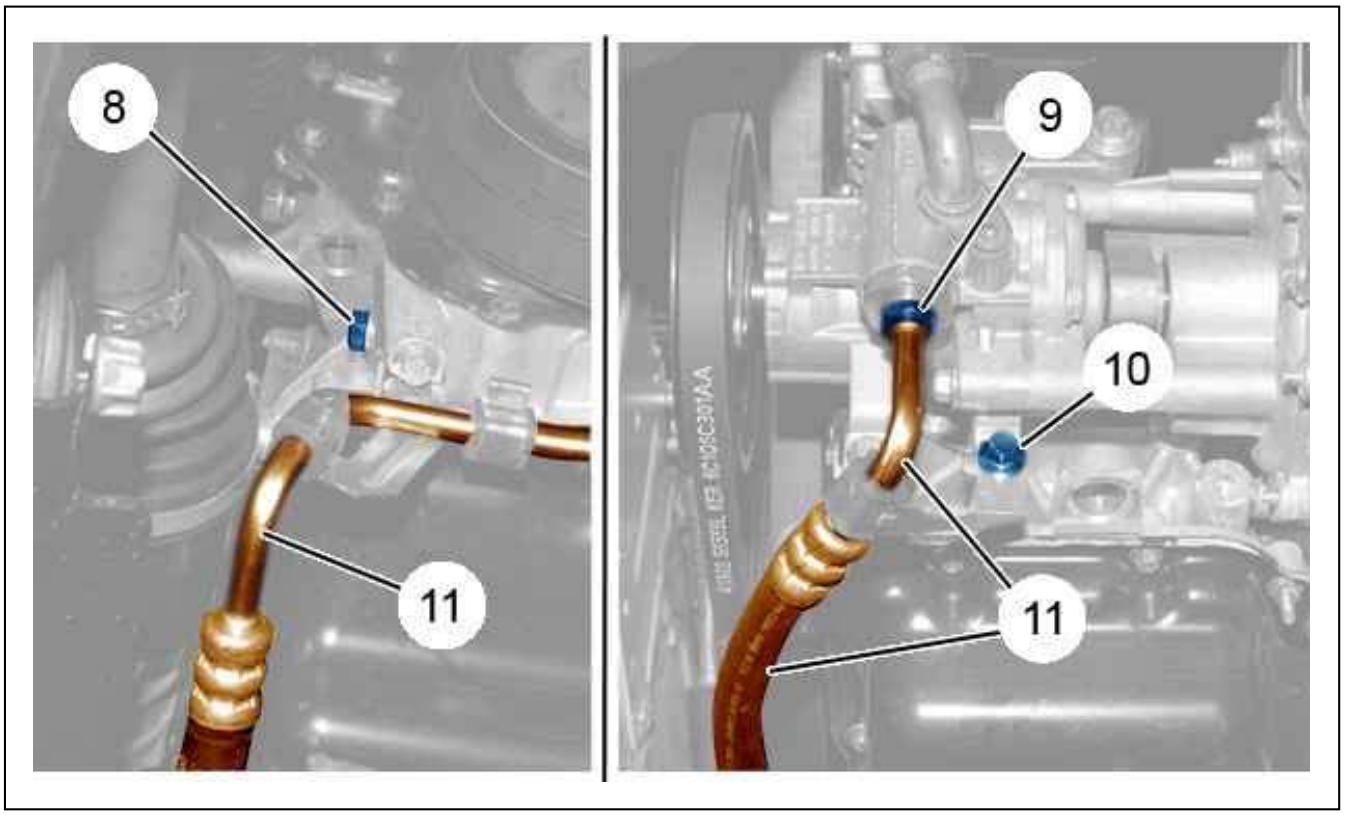

Figure : B1BPSG1D

Uncouple the high pressure pipe union (9).
Remove the bolts (8), (10).
Move aside the piping (11) without distorting it.

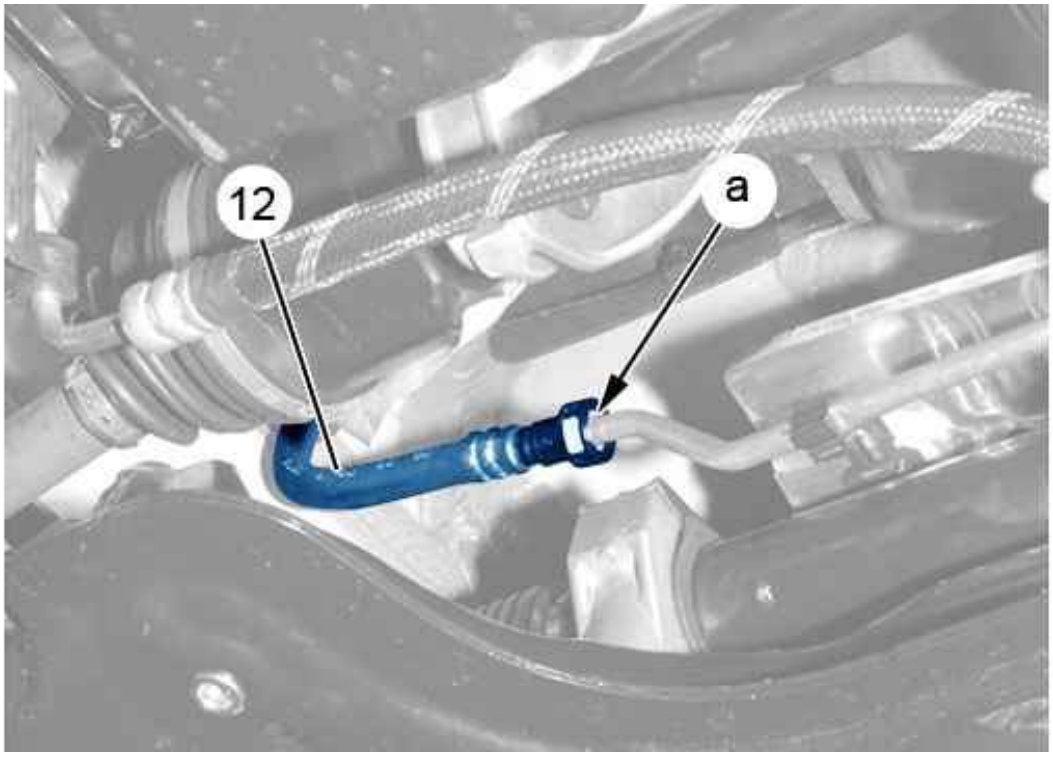

Figure : B3EG0JRD

Uncouple : The low pressure pipe (12) (at "a").
Plug the hydraulic unit unions ; Using plugs .
Disconnect the power steering regulated electrovalve connector (if necessary).

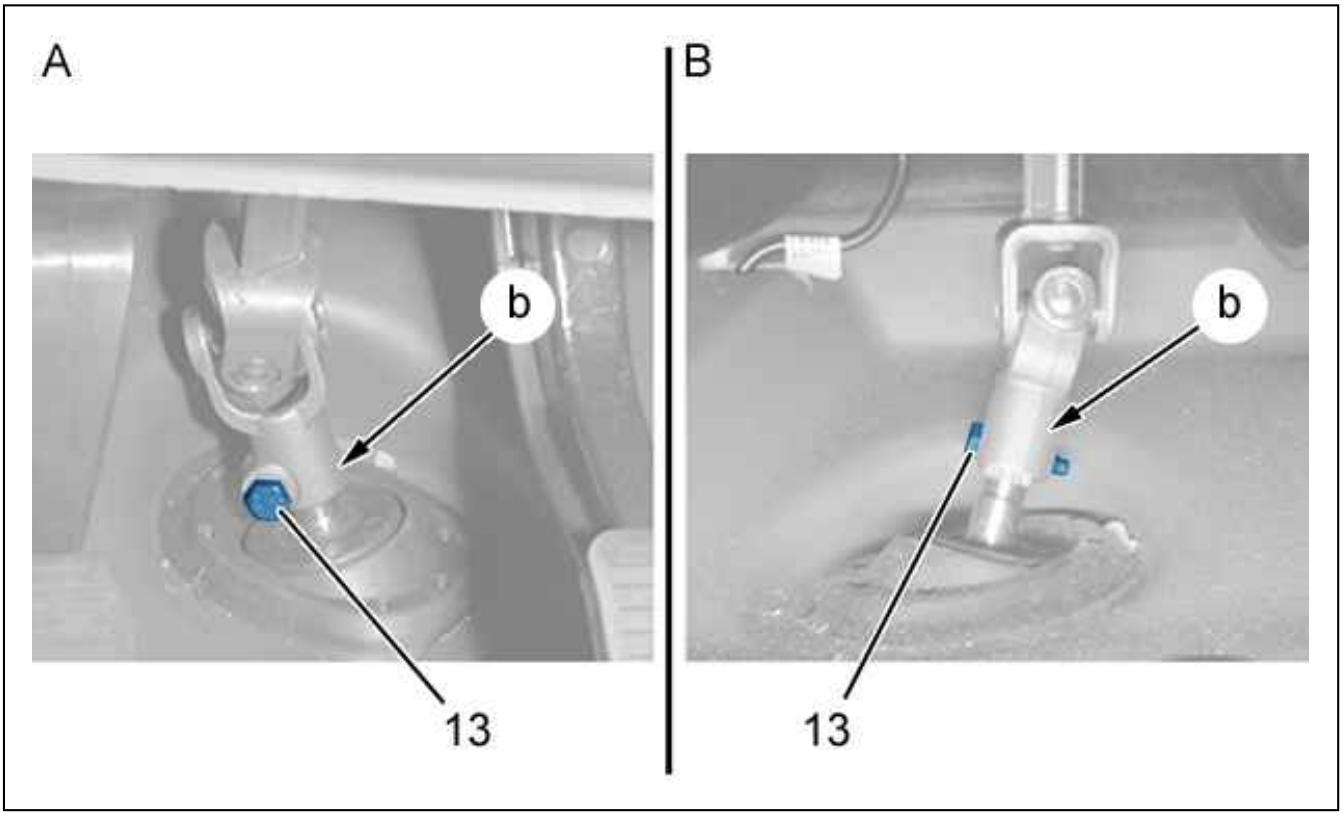

Figure : B3EG0JSD

Fitting A : Left-hand drive .
Fitting B : Right-hand drive .
Remove bolts (13).
Disengage and push the lower part of the steering column upwards (at "b").

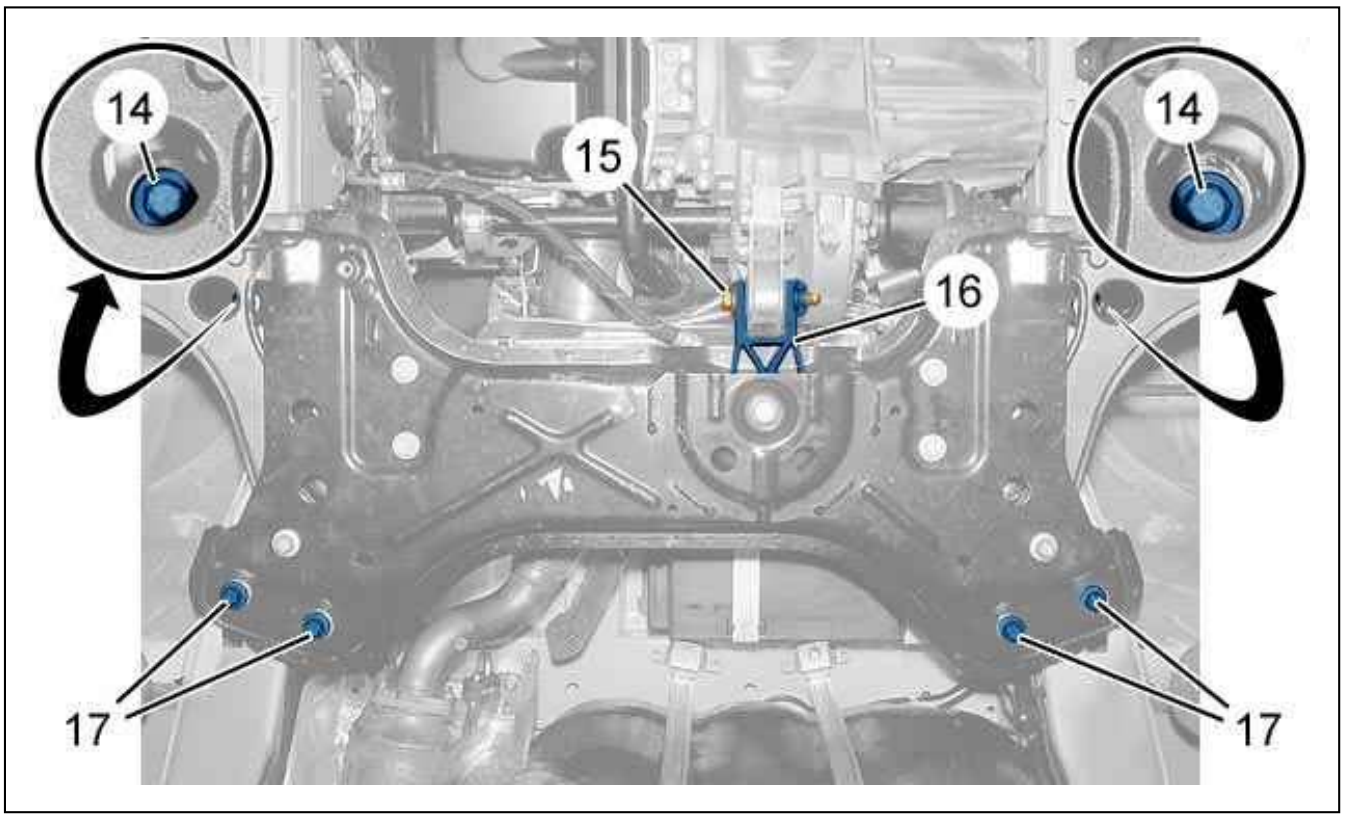

Figure : B3EG0JTD

Remove the bolt (15).
Move aside the torque reaction rod (16) from the front subframe.
Position a lifting tool to retain the front sub-frame.
Remove :

- The bolts (14)
- The bolts (17)
- The front subframe and steering mechanism assembly

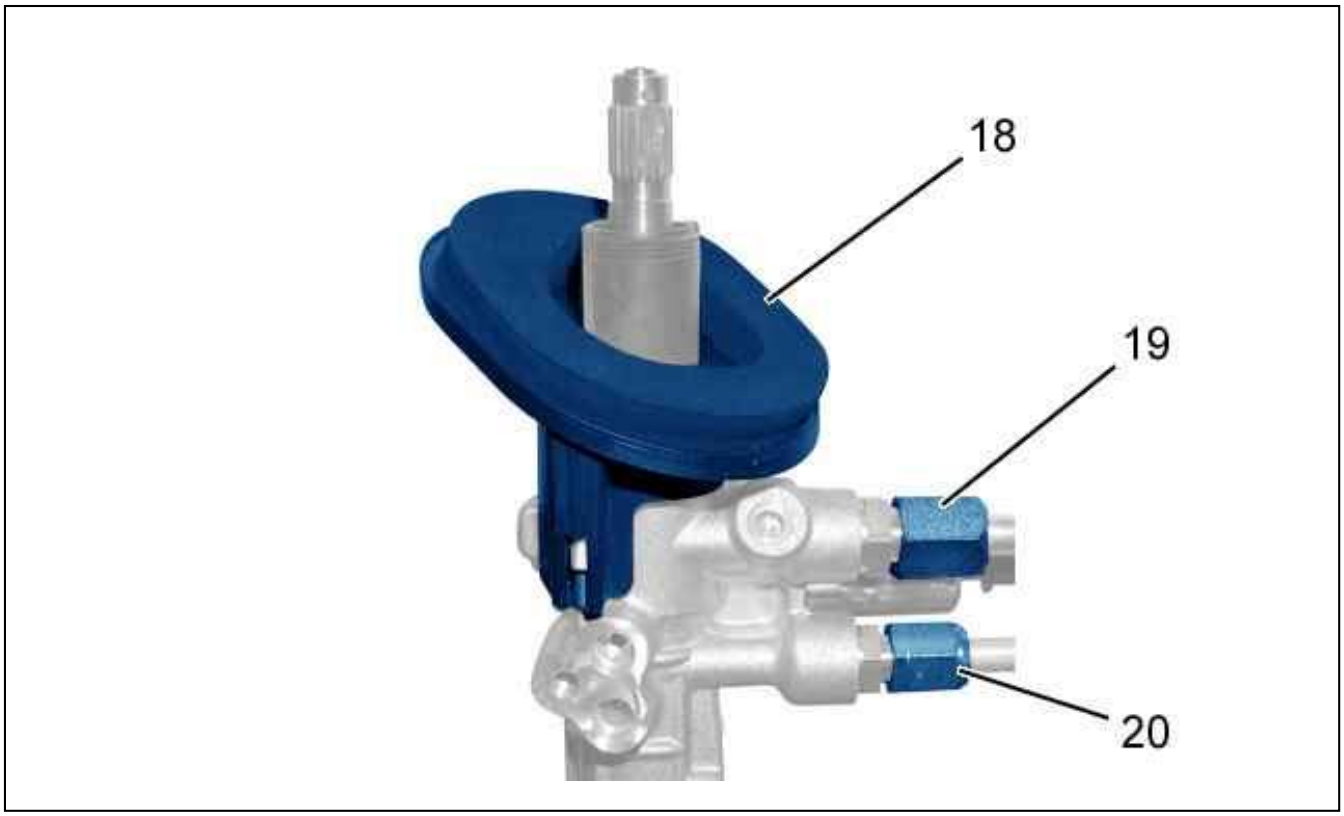

Figure : B3EG0JUD

Remove the protector (18).
Uncouple :

- The high pressure pipe union (20)
- The low pressure pipe union (19)

Remove :

- The thermal protector
- The high pressure pipe (11)
- The low pressure pipe (12)

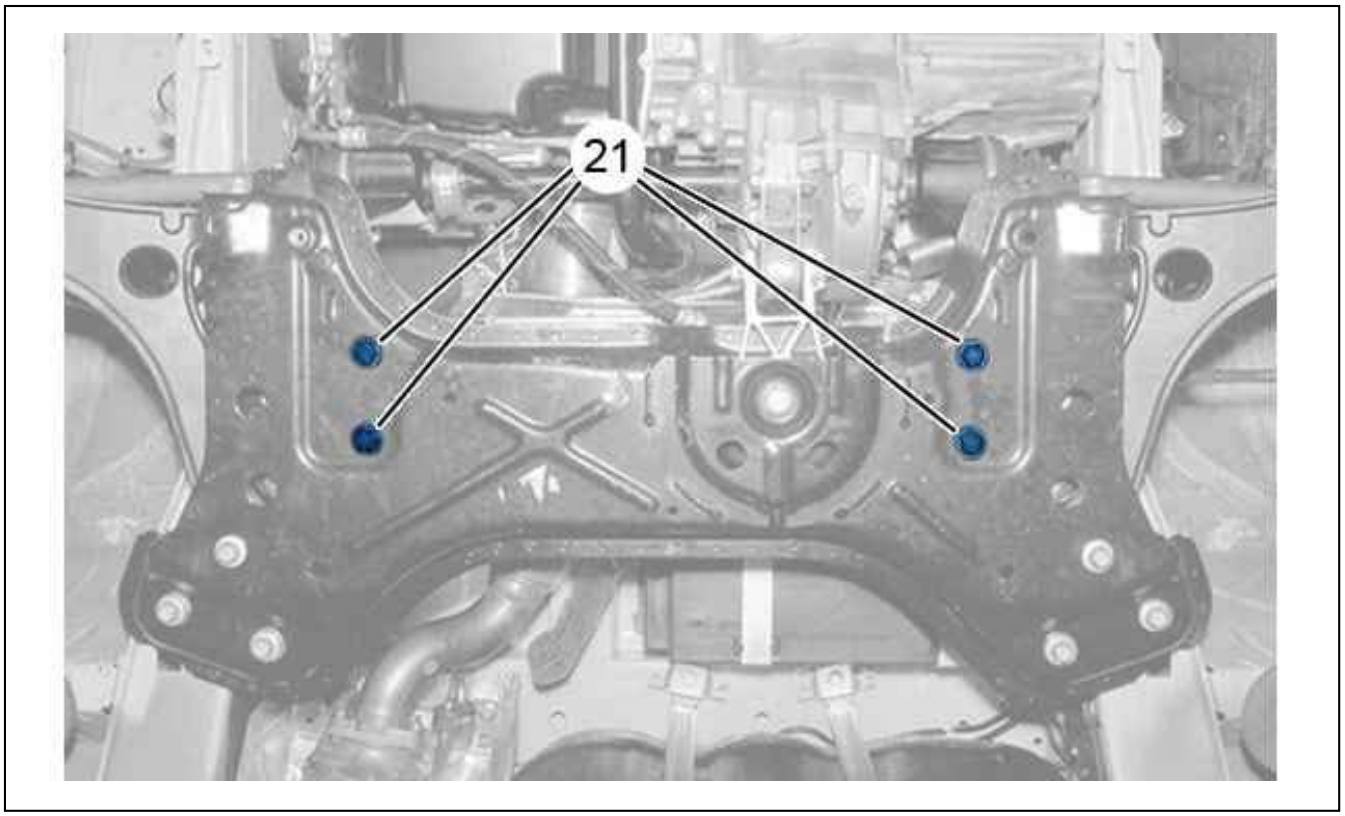

Figure : B3EG0JVD

Remove the bolts (21).
Uncouple the steering mechanism.

3. Refitting

CAUTION : Adhere to the tightening torques.

Tightening torques :

- Front suspension
- Power steering

N.B. : Always fit new Nylstop nuts.

Couple the steering mechanism.
Refit the bolts (21).
Remove the protector (18) (new).
Refit :

- The low pressure pipe (12)
- The high pressure pipe (11)
- The thermal protector

Couple up :

- The high pressure pipe union (20)
- The low pressure pipe union (19)

Position the front subframe and steering mechanism assembly on the body.
Refit :

- The bolts (17)

- The bolts (14)

Engage the torque reaction rod (16) on the front sub-frame.
Refit bolt (15).
Couple up :

- The low pressure pipe (12) (at "a")
- The high pressure pipe union (9)

Refit :

- The bolt (8)
- The bolt (10)

Connect the power steering regulated electrovalve connector (if necessary).
Position the hub carrier lower ball joint (on each side).
Refit (on each side) :

- The 3 bolts (4)
- The silentblock (7)
- The washer (6)
- The nut (5)
- The nut (3)

Couple up the steering ball-joint (1) (on each side).
Refit the nut (2) (on each side).
Couple the lower part of the steering column (at "b").
Refit the new screw (13) (Pre-coated with a thread-locking product).
Fit the wheels.
Return the vehicle to its wheels.
Tighten the wheel bolts .

CAUTION : Perform the operations to be carried out following reconnection of the battery.

Reconnect the battery negative terminal.
Fill and bleed the power steering system .

REMOVING - REFITTING : STEERING MECHANISM

1. Recommended tools

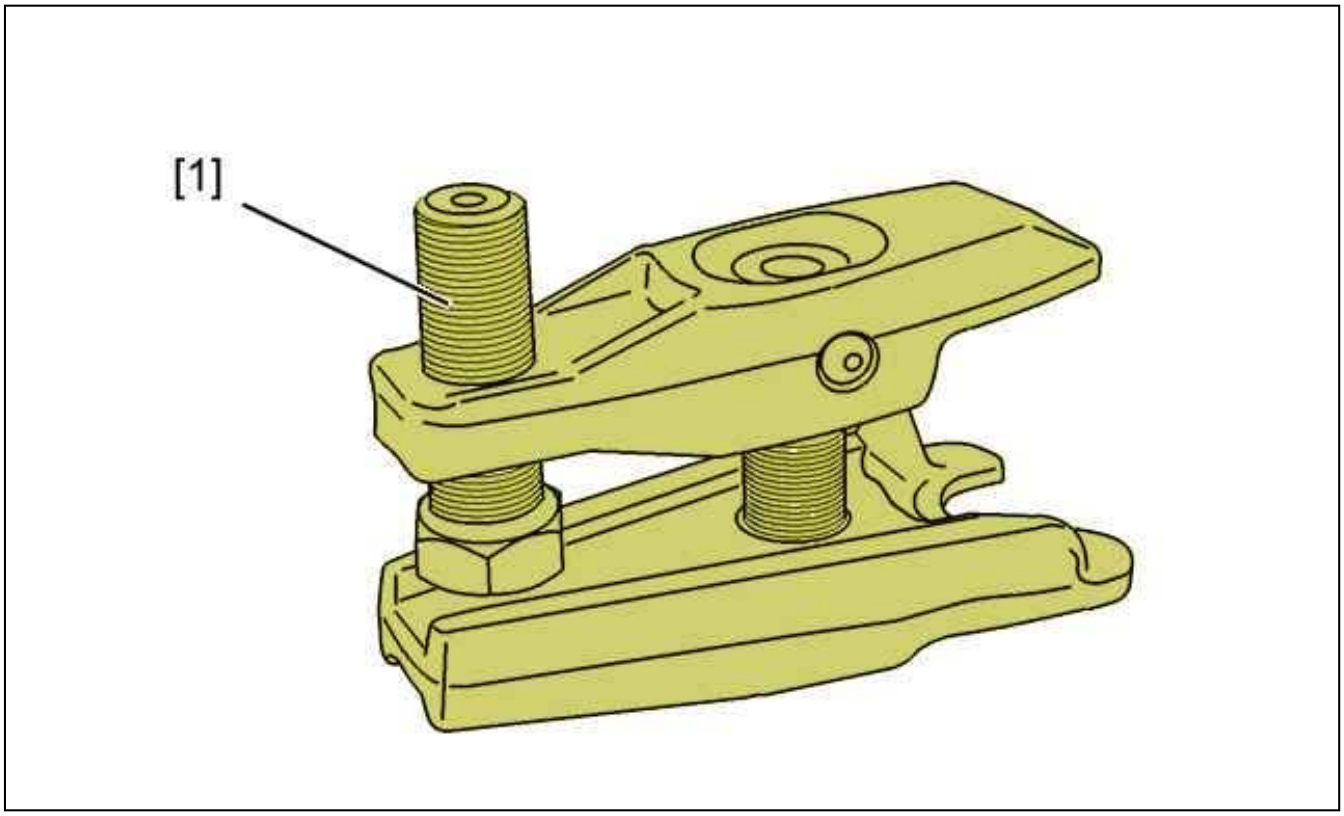

Figure : E5AP2WYD

Reference	Designation	Reference	Reference
[1]	ball-joint extractor	5707-T	(-).0919

2. Removing

Disconnect the battery negative terminal.
Untighten the wheel screws (front).
Lift and support the front of the vehicle.
Remove the front wheels ..

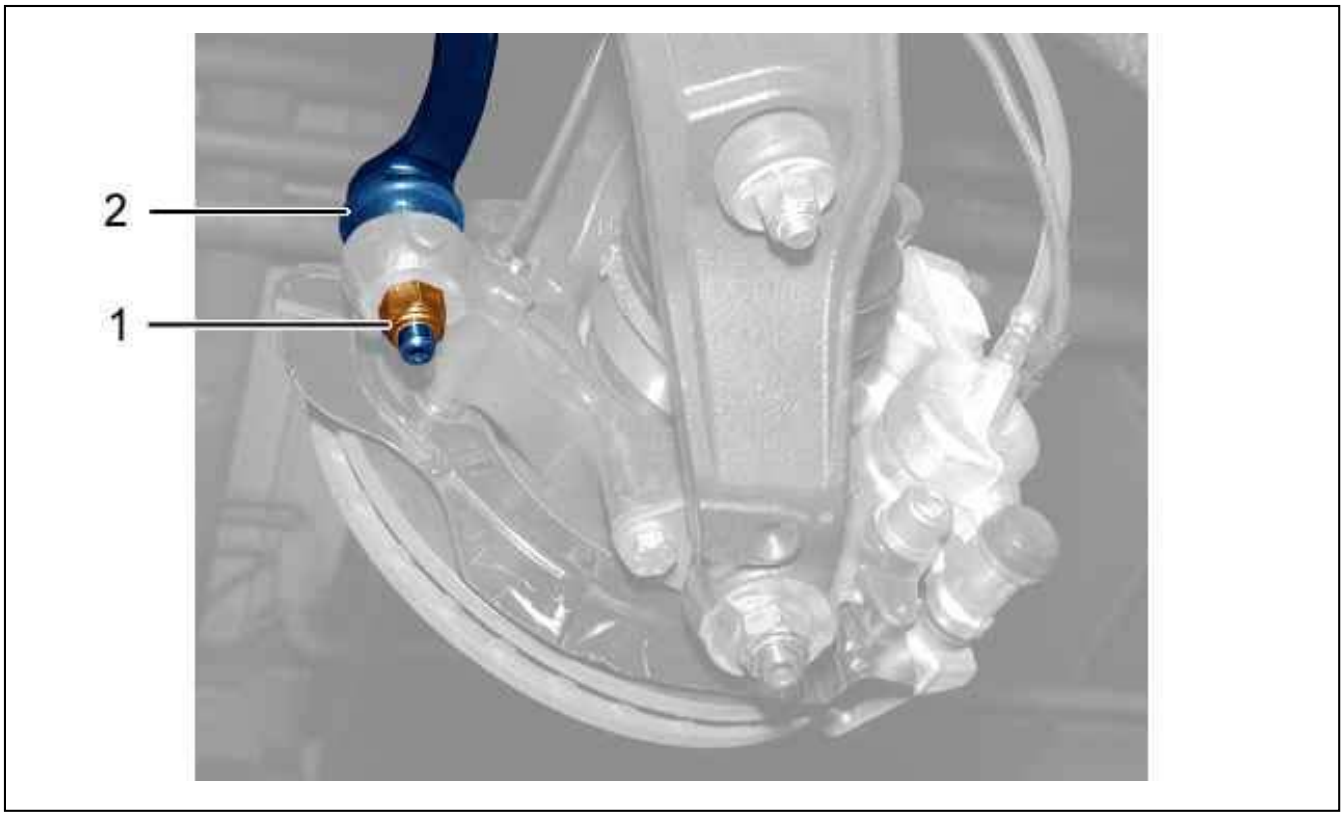

Figure : B3FP7JJD

Remove the nut (1) (on each side).
Uncouple the steering ball-joint (2) ; Using tool [1] (on each side).

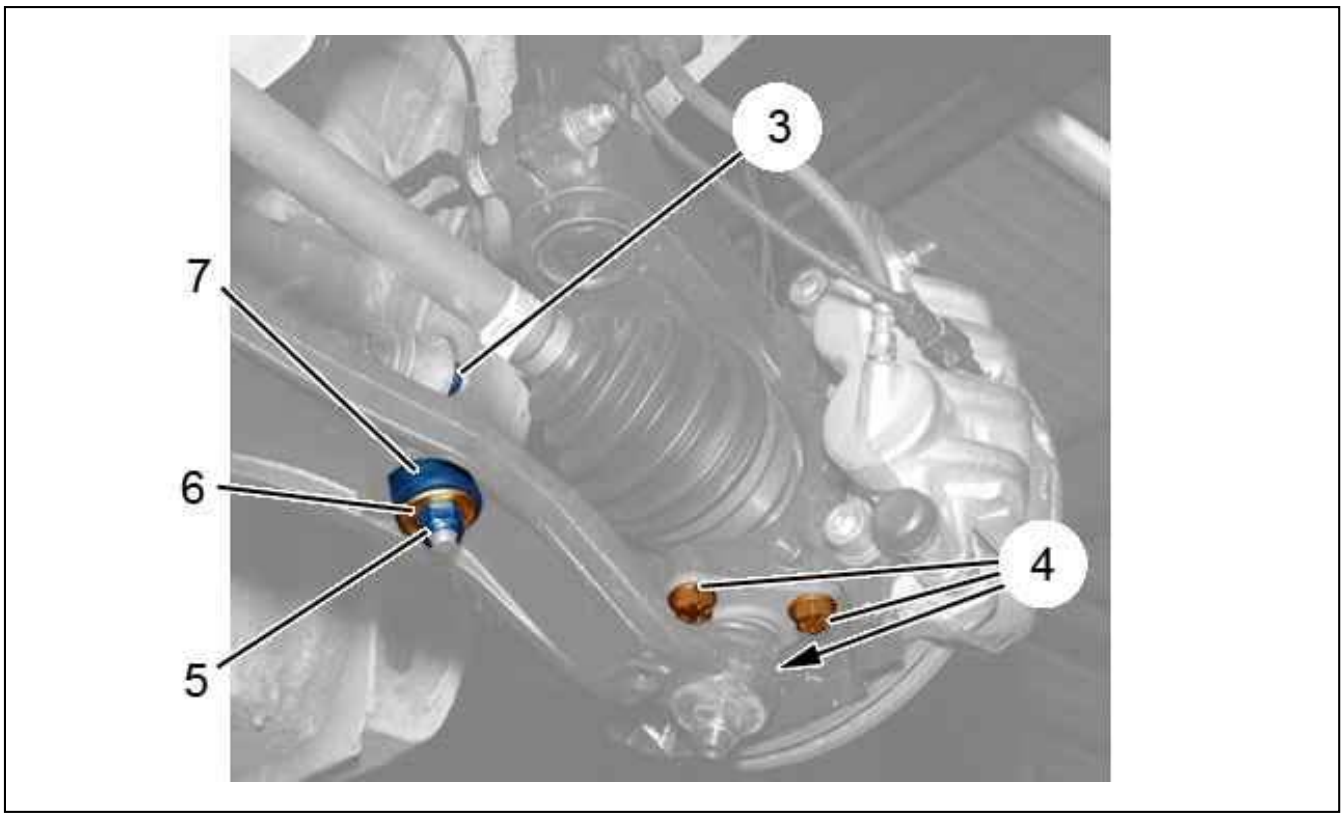

Figure : B3BP1CPD

Unscrew nut (3) (on each side).

Remove (on each side) :

- The nut (5)
- The washer (6)
- The silentblock (7)
- The 3 bolts (4)

Move aside the hub carrier (on each side).
Drain the steering assistance circuit (see the relevant operation).

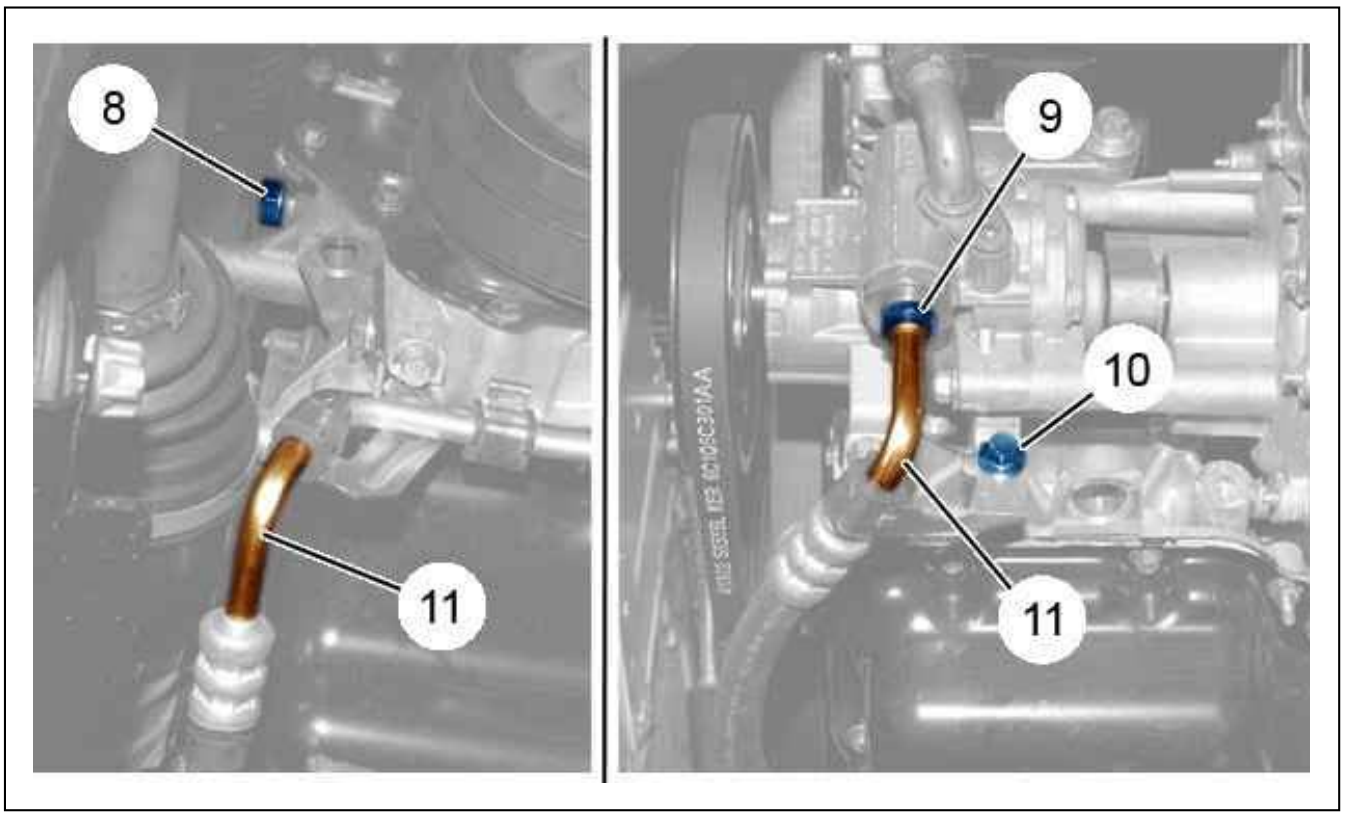

Figure : B1BPRRKD

Uncouple the high pressure pipe union (9).
Remove bolts (8), (10).
Move aside the piping (11) without distorting it.

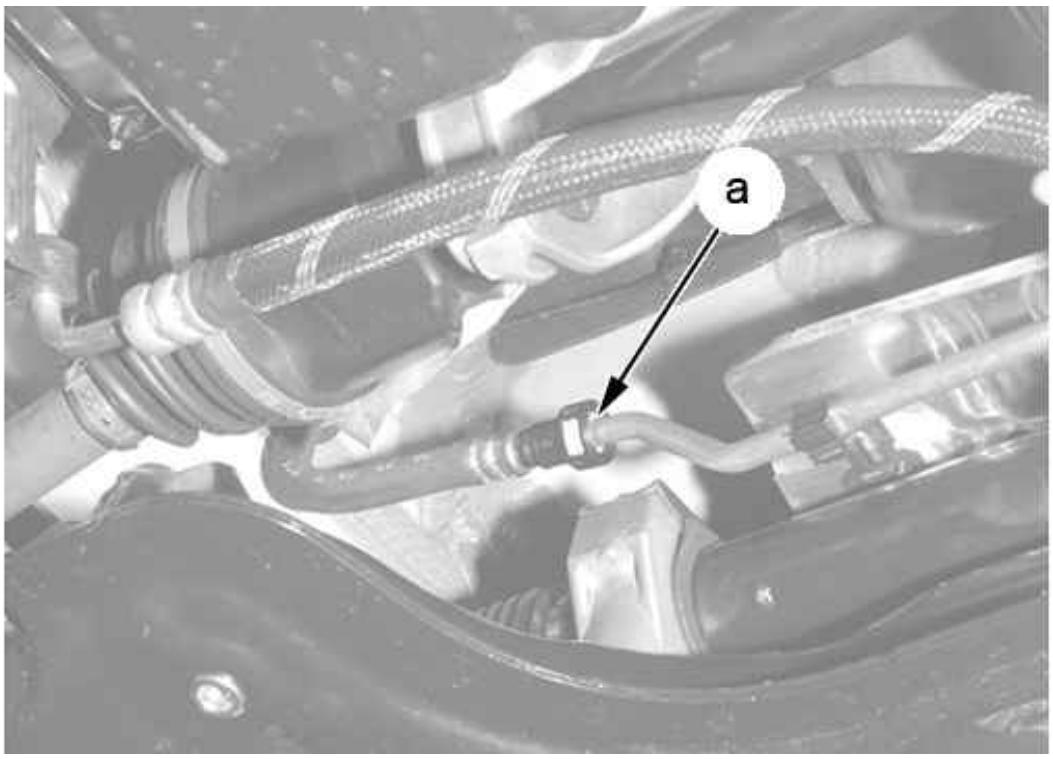

Figure : B3FP7KXD

Uncouple the low pressure pipe (at "a").
Close the hydraulic unit openings using caps.
Disconnect the power steering regulated electrovalve connector (if necessary).

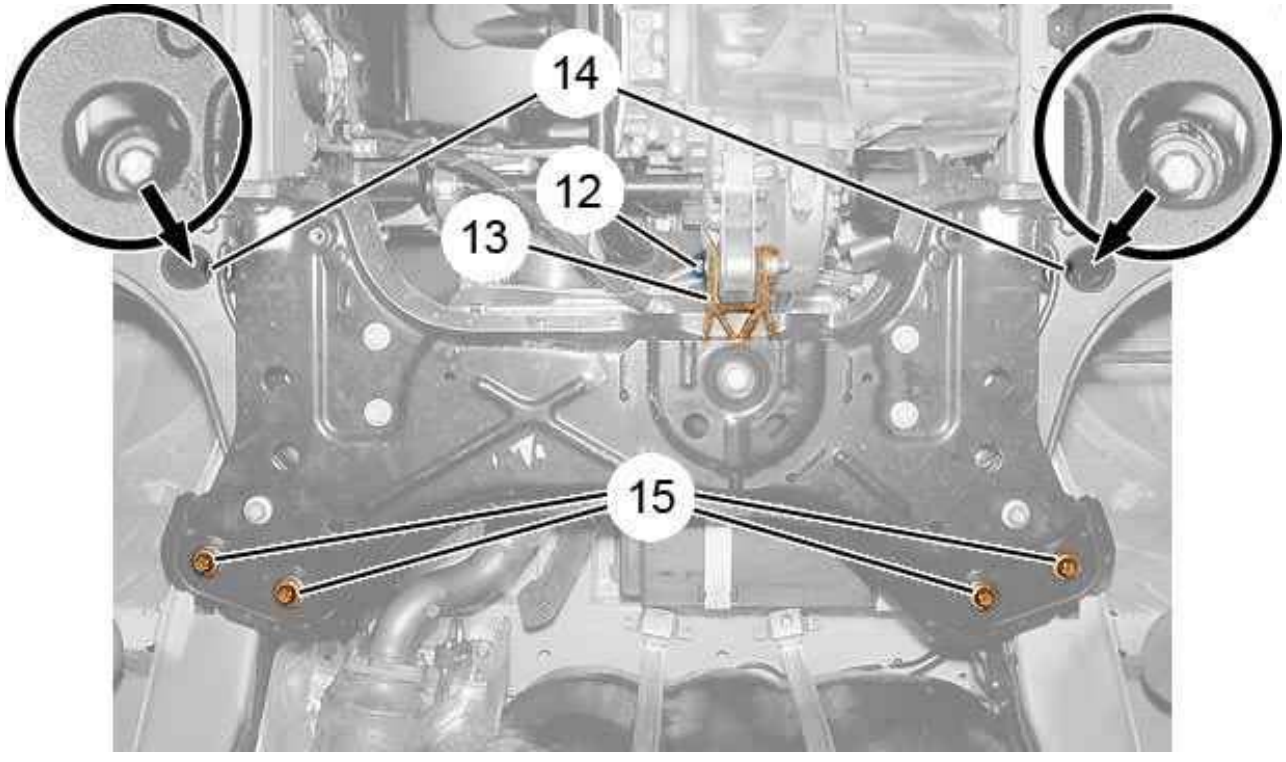

Figure : B3CP0BGD

Remove bolts (12).
Move aside the torque reaction rod (13) from the front subframe.
Position a lifting tool to retain the front sub-frame.
Remove :

- The bolts (14)
- The bolts (15)
- The front subframe and steering mechanism assembly

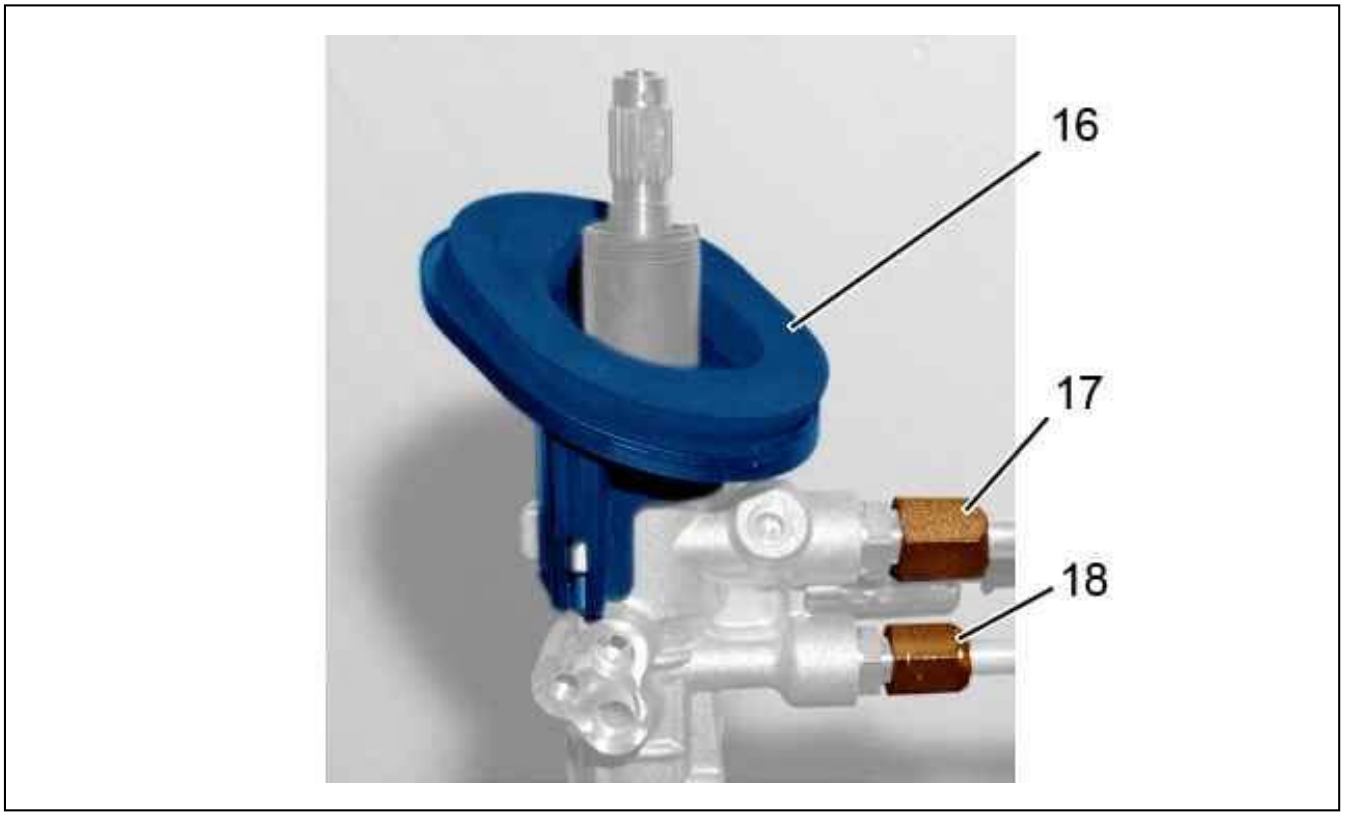

Figure : B3EP18RD

Remove the protector (16).
Uncouple :

- The high pressure pipe union (18)
- The low pressure pipe union (17)

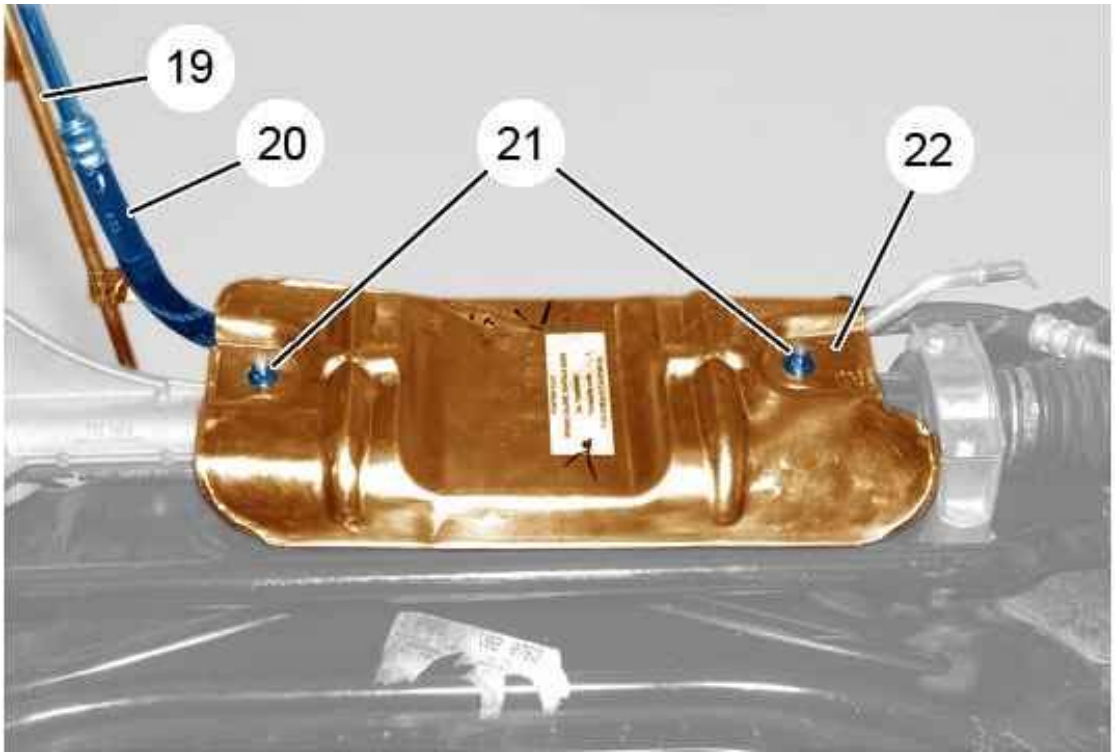

Figure : B3EP18SD

Remove :

- The nuts (21)
- The thermal protector (22)
- The high pressure pipe (19)
- The low pressure pipe (20)

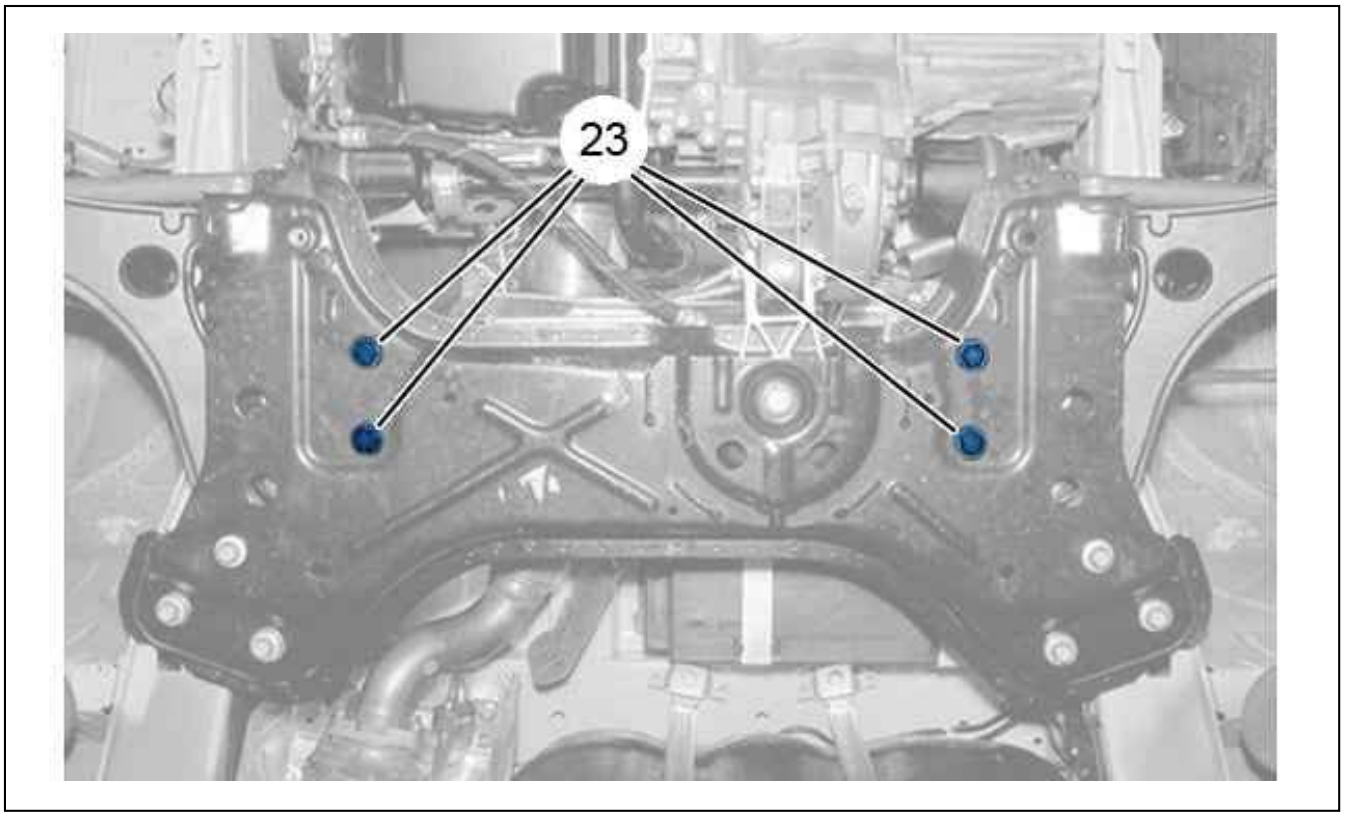

Figure : B3CP0BHD

Remove the bolts (23).
Uncouple the steering mechanism.

3. Refitting

N.B. : Always fit new Nylstop nuts.

Couple the steering mechanism.
Refit the bolts (23) ; Tighten to 11 ± 1,4 daN.m.
Fit the protector (16) (new).
Refit :

- The low pressure pipe (20)
- The high pressure pipe (19)
- The thermal protector (22)
- The nuts (21) ; Tighten to 0,6 ± 0,17 daN.m

Couple up :

- The high pressure pipe union (18) ; Tighten to 5,5 ± 0,7 daN.m
- The low pressure pipe union (17) ; Tighten to 6,3 ± 0,8 daN.m

Position the front subframe and steering mechanism assembly on the body.
Refit :

- The bolts (14) ; Tighten to 29 ± 1 daN.m
- The bolts (15) ; Tighten to 29 ± 1 daN.m

Engage the torque reaction rod (13) on the front subframe.
Refit bolt (12) ; Tighten to 29 ± 8 daN.m.
Couple up :

- The low pressure pipe (at "a")
- The high pressure pipe union (9) ; Tighten to 2,7 ± 0,2 daN.m

Refit :

- The (8) bolt ; Tighten to 2 ± 0,2 daN.m
- The (10) bolt ; Tighten to 2,2 ± 0,2 daN.m

Connect the power steering regulated electrovalve connector (if necessary).
Position the hub carrier lower ball joint (on each side).
Refit (on each side) :

- The 3 bolts (4) ; Tighten to 11,5 ± 0,4 daN.m
- The silentblock (7)
- The washer (6)
- The nut (5)

Couple up the steering ball-joint (2) (on each side).
Refit the nut (1) ; Tighten to 8 ± 0,7 daN.m (on each side).
Fit the wheels.
Return the vehicle to its wheels.
Tighten (on each side) :

- The nut (3) to 5,6 ± 0,5 daN.m
- The nut (5) to 5,6 ± 0,5 daN.m

Tighten the wheel bolts (depending on the version) :

- 15 inch wheels : 16 ± 2,2 daNm
- 16 inch wheels : 18 ± 2,4 daNm

Reconnect the battery negative terminal.
Fill and bleed the power steering system (see the relevant operation).

REPLACEMENT : REAR ROOF PANEL - BOWS

ESSENTIAL : All of the stripped surfaces must be protected by means of the approved electrolytic rezincing process (see the relevant operation).

ESSENTIAL : Observe the elementary rules of hygiene and safety (wear a face mask to protect against fumes and vapour - work in a well ventilated space).

1. Additional operations

Disconnect the battery.
Replace the roof Before (see the relevant operation).
Release the wiring harnesses.

2. Identification of replacement parts

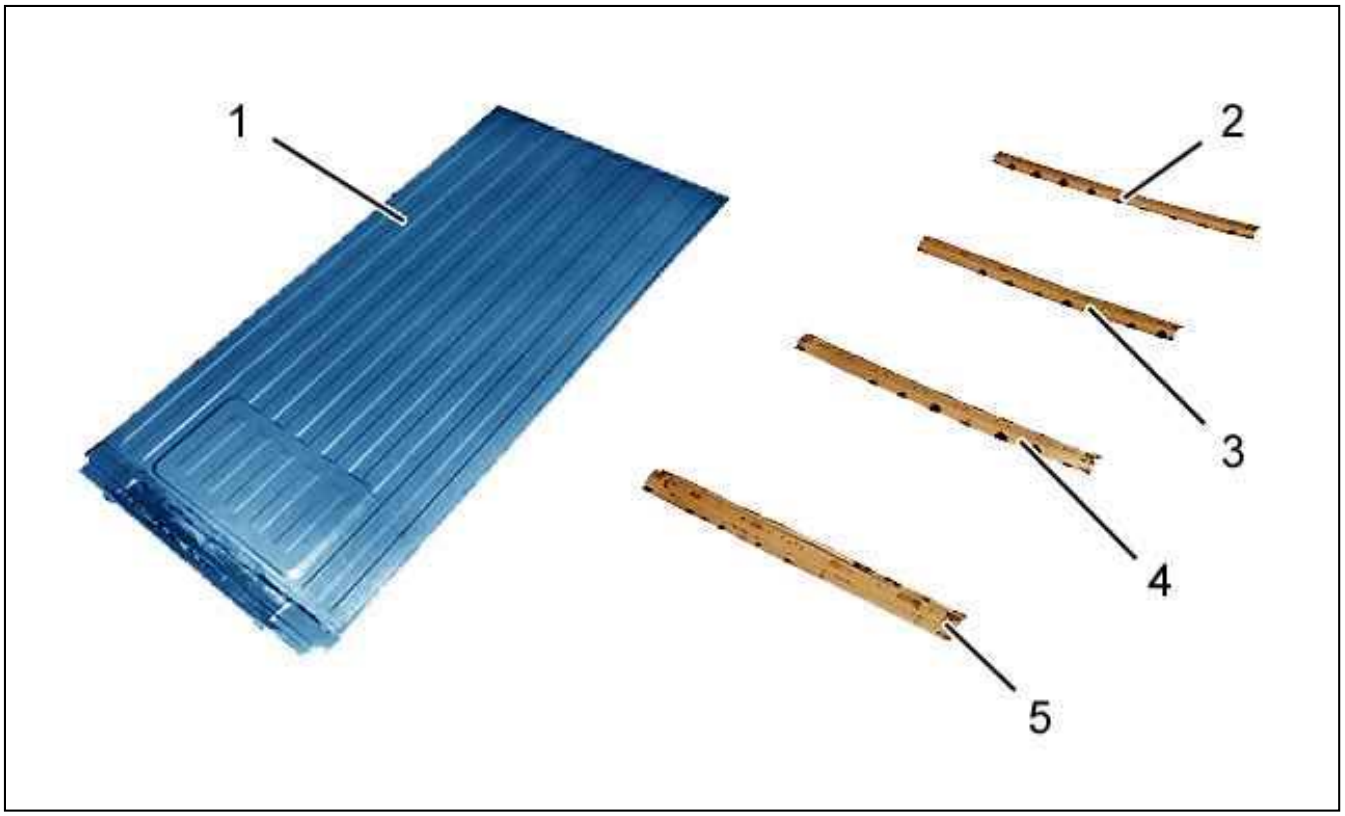

Figure : C4DP0A1D

(1) Rear roof panel.
(2) Intermediate bow.
(3) Roof panel centre arch.
(4) Intermediate bow.
(5) Roof bow .

3. Preparation of new parts

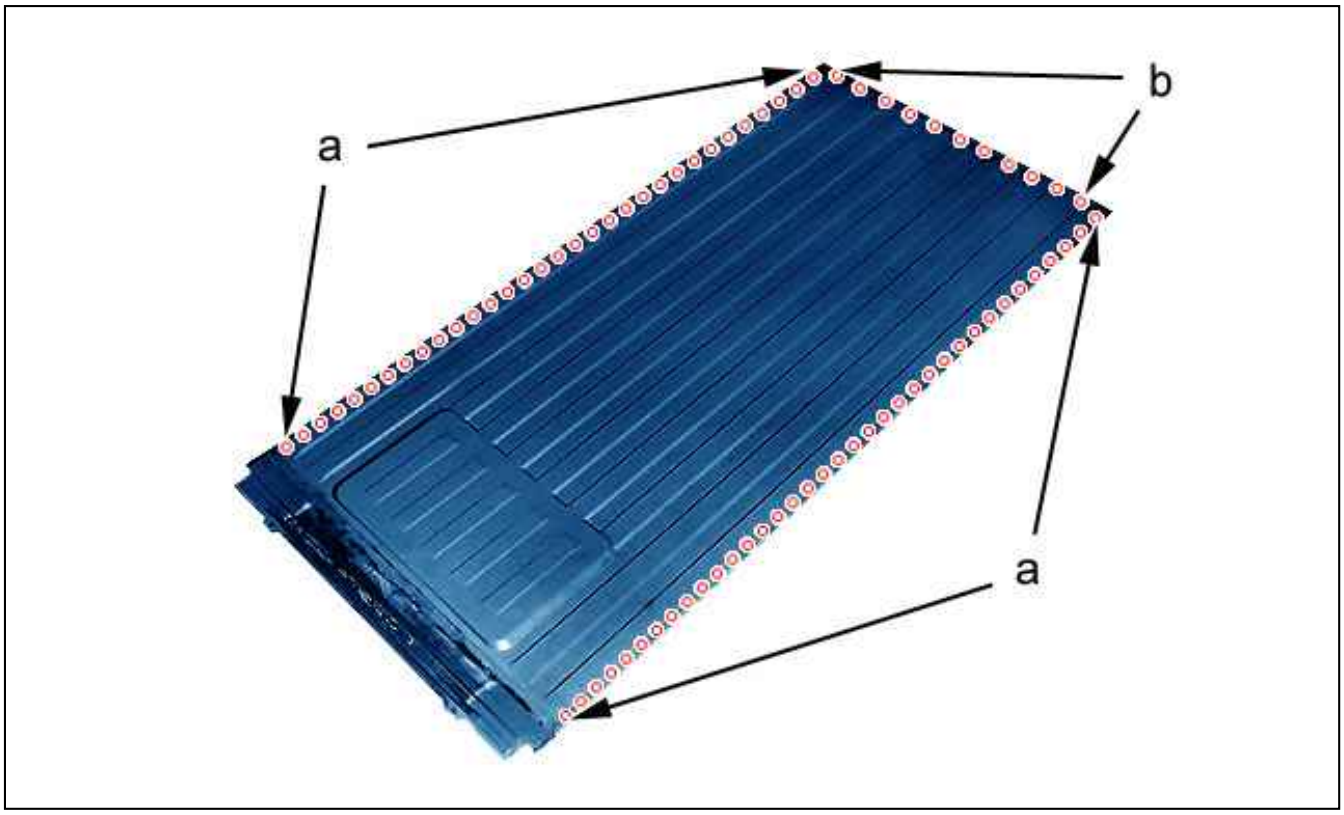

Figure : C4DP0A2D

Mark then drill to Ø 6 mm for later plug welding (25 holes as "a").
Mark then drill to Ø 6 mm for later plug welding (11 holes as "b").
Prepare the mating edges .

4. Cutting out

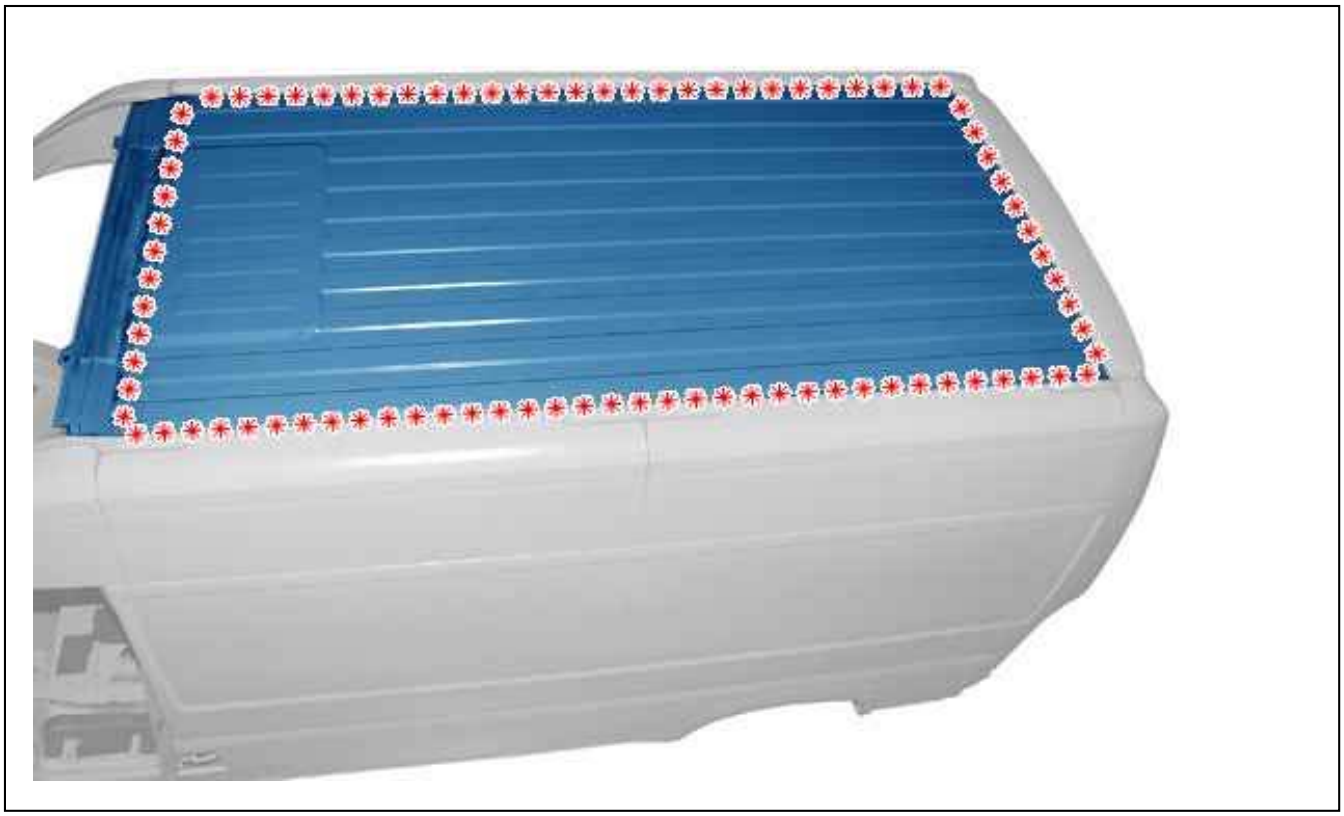

Figure : C4DP0A3D

Cut out the spot welds .
Remove the roof Rear .

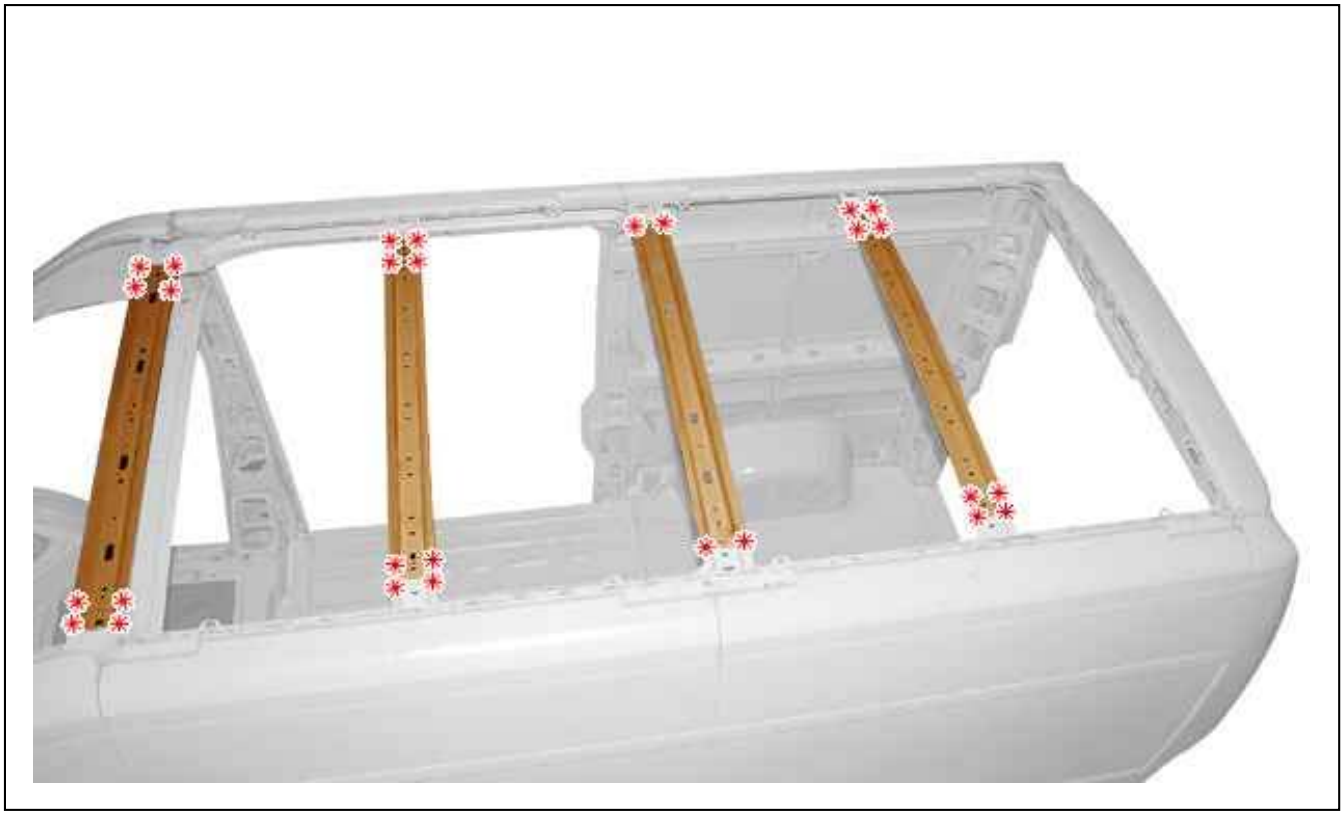

Figure : C4DP0A4D

Cut out the spot welds .

Remove the bows.

5. Bodywork cleaning and preparation

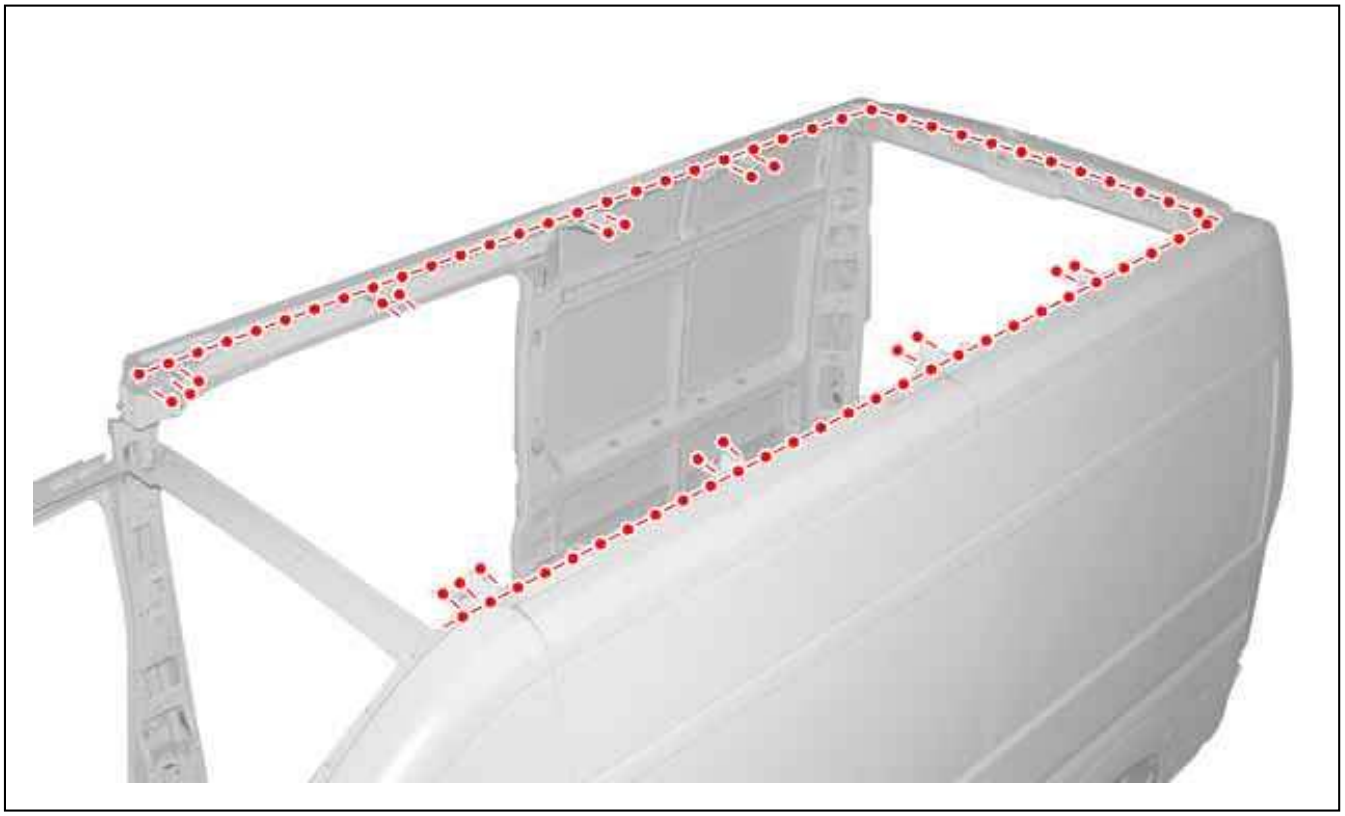

Figure : C4DP0A5D

Prepare the mating edges .
Align the mating edges and protect them with a weldable primer.

6. Adjustment

Present the elements, allowing for adjustment.
Check the fits and clearances (see the relevant operation).

7. Welding

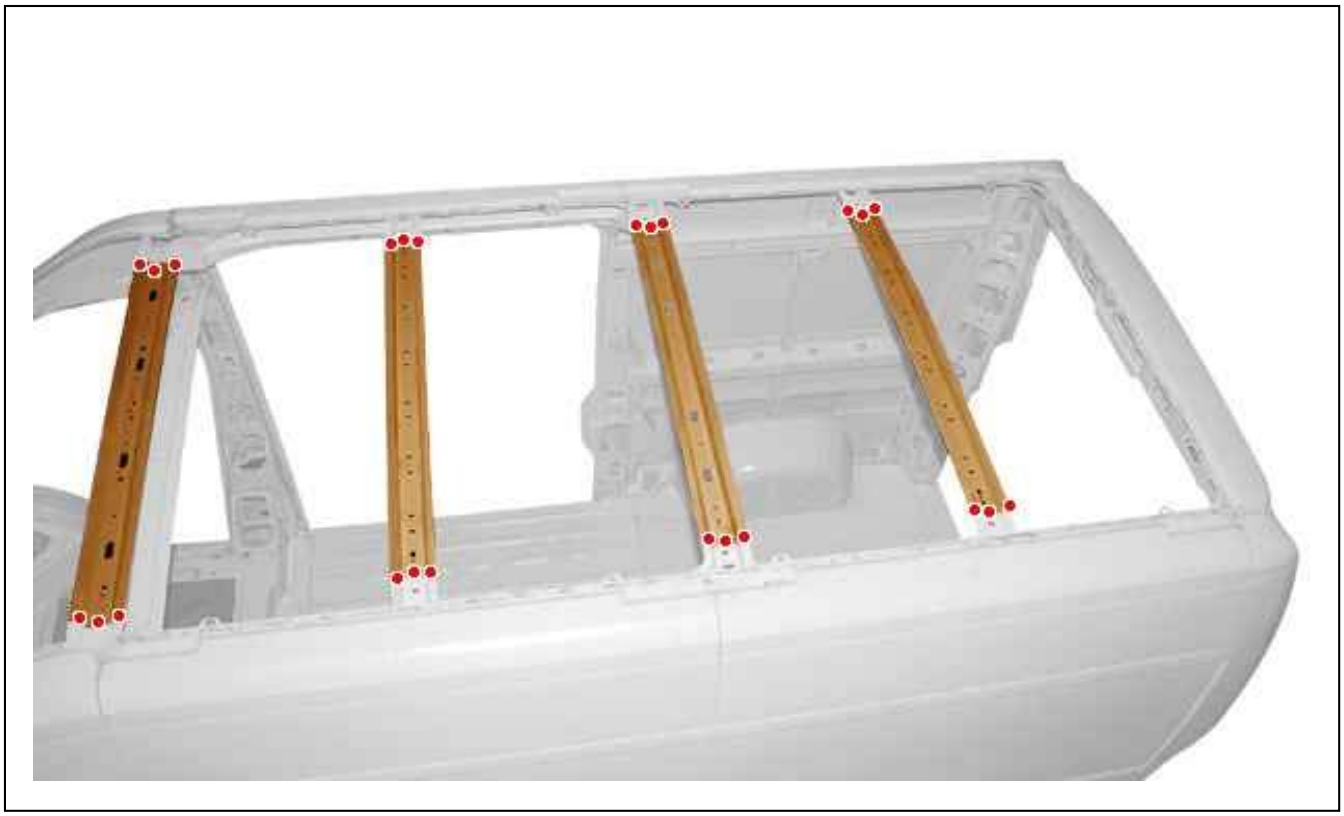

Figure : C4DP0A6D

Fit the bows.
Weld with electric spot welds.

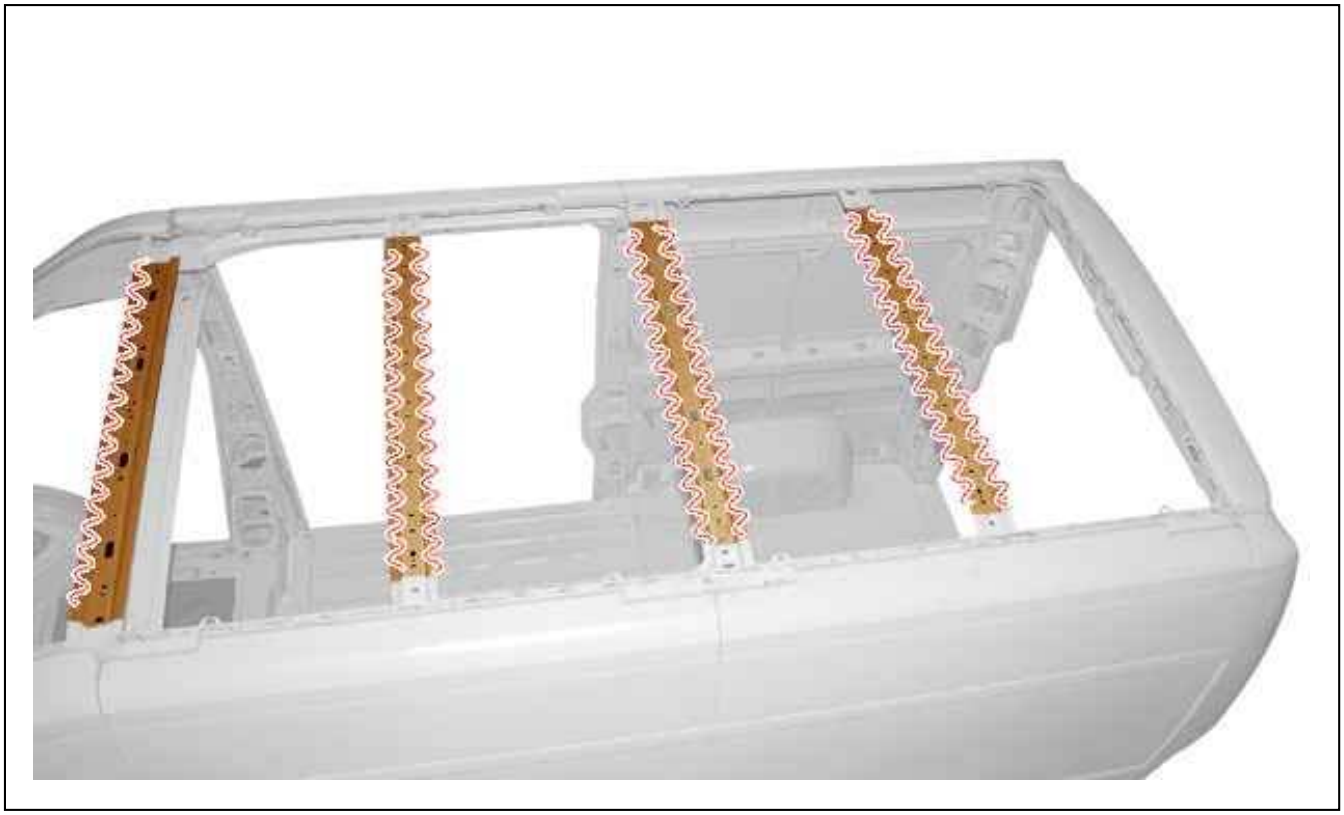

Figure : C4DP0A7D

Apply a structural shimming adhesive part number " A3" (see the relevant operation).

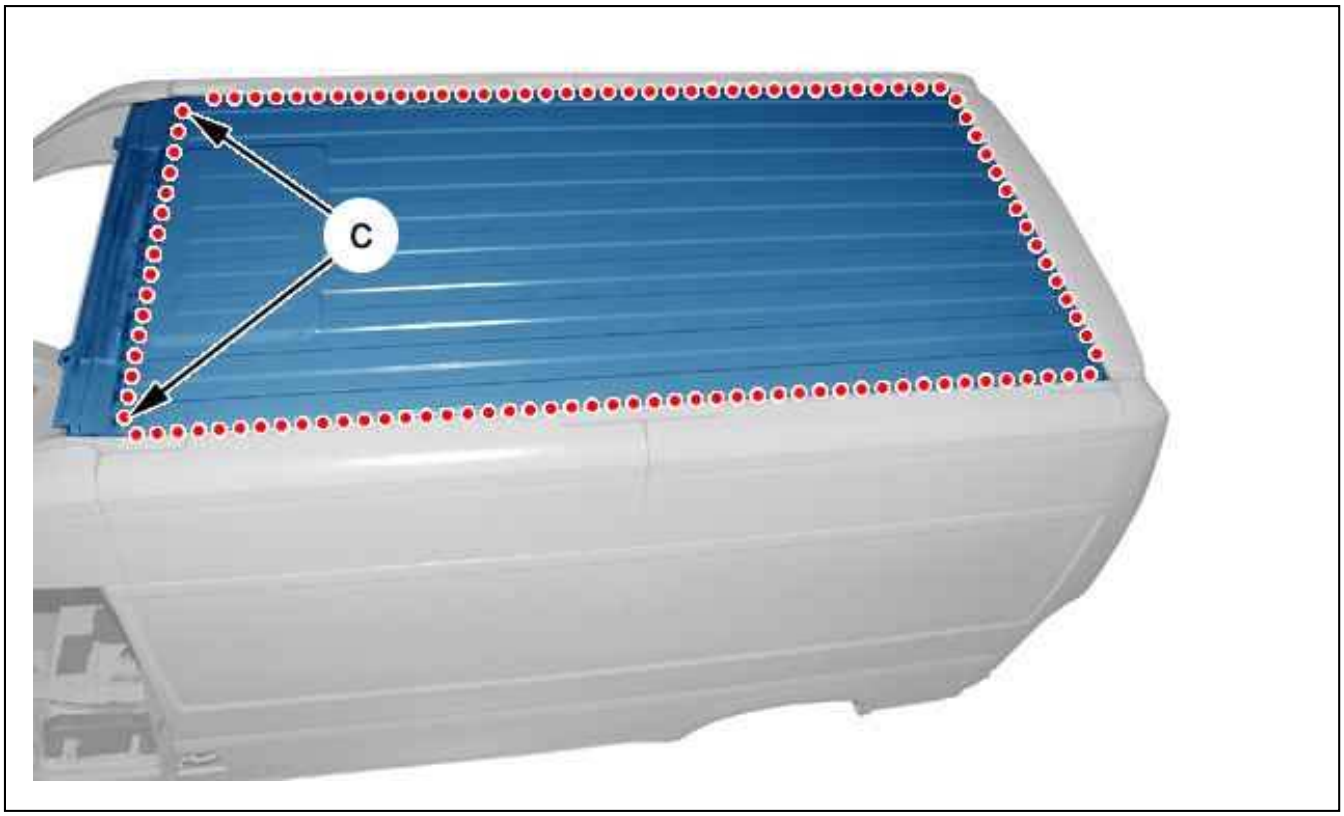

Figure : C4DP0A8D

Fit the roof panel Rear .
Weld with electric spot welds (following "c").
Weld with plug welds.
Grind the plug welds.

8. Sealing

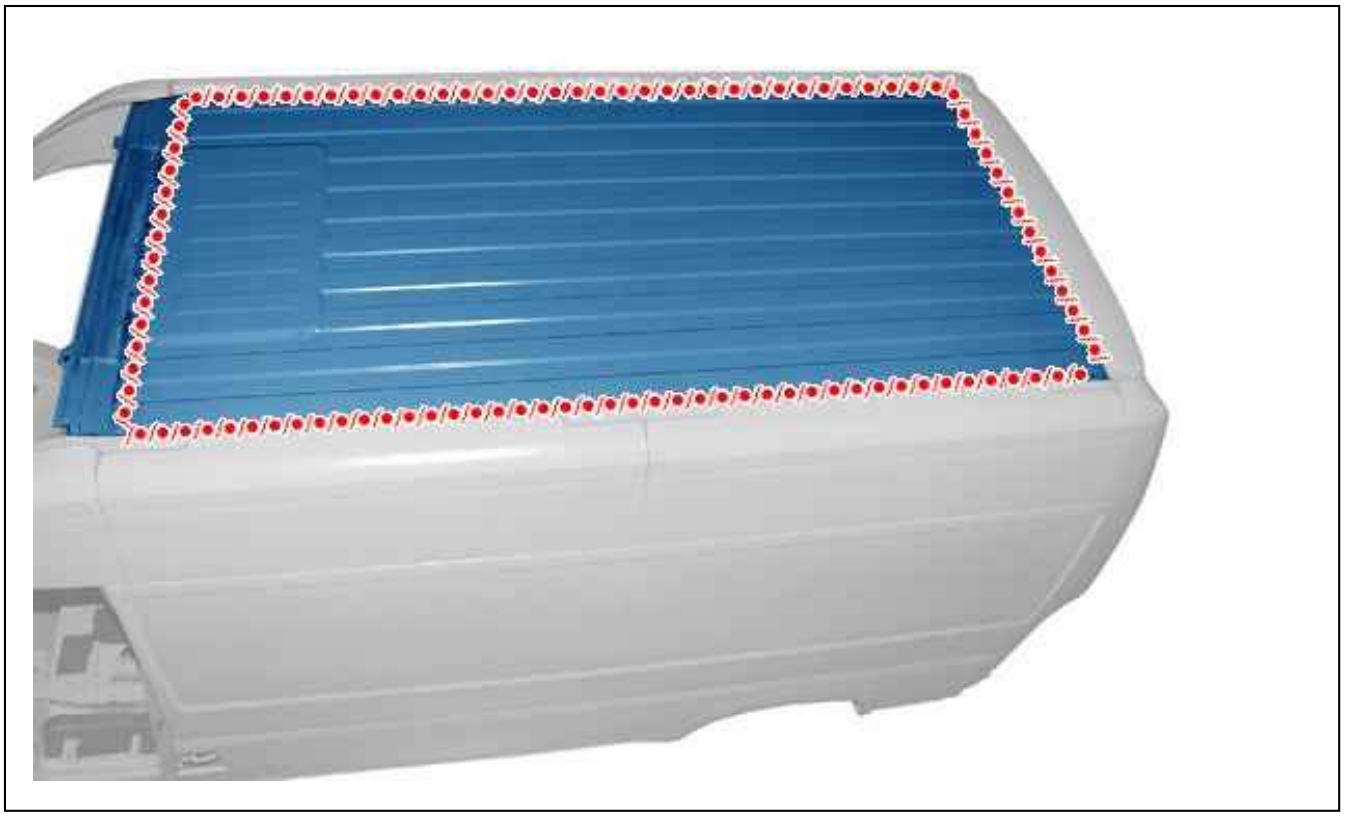

Figure : C4DP0A9D

Apply a phosphate-print layer to the zones laid bare.
Apply a sealing mastic of type " A1" (see the relevant operation).

9. Reinitialisation

Reconnect the battery.

ESSENTIAL : Perform the operations to be carried out following reconnection of the battery.

REPLACEMENT : UPPER REAR CROSSMEMBER, COMPLETE

ESSENTIAL : All of the stripped surfaces must be protected by means of the approved electrolytic rezincing process (see the relevant operation).

ESSENTIAL : Observe the elementary rules of hygiene and safety (wear a face mask to protect against fumes and vapour - work in a well ventilated space).

1. Additional operations

Disconnect the battery.
Removing - Refitting :

- Third brake light
- Rear doors

Release the harness .

2. Identification of the replacement parts

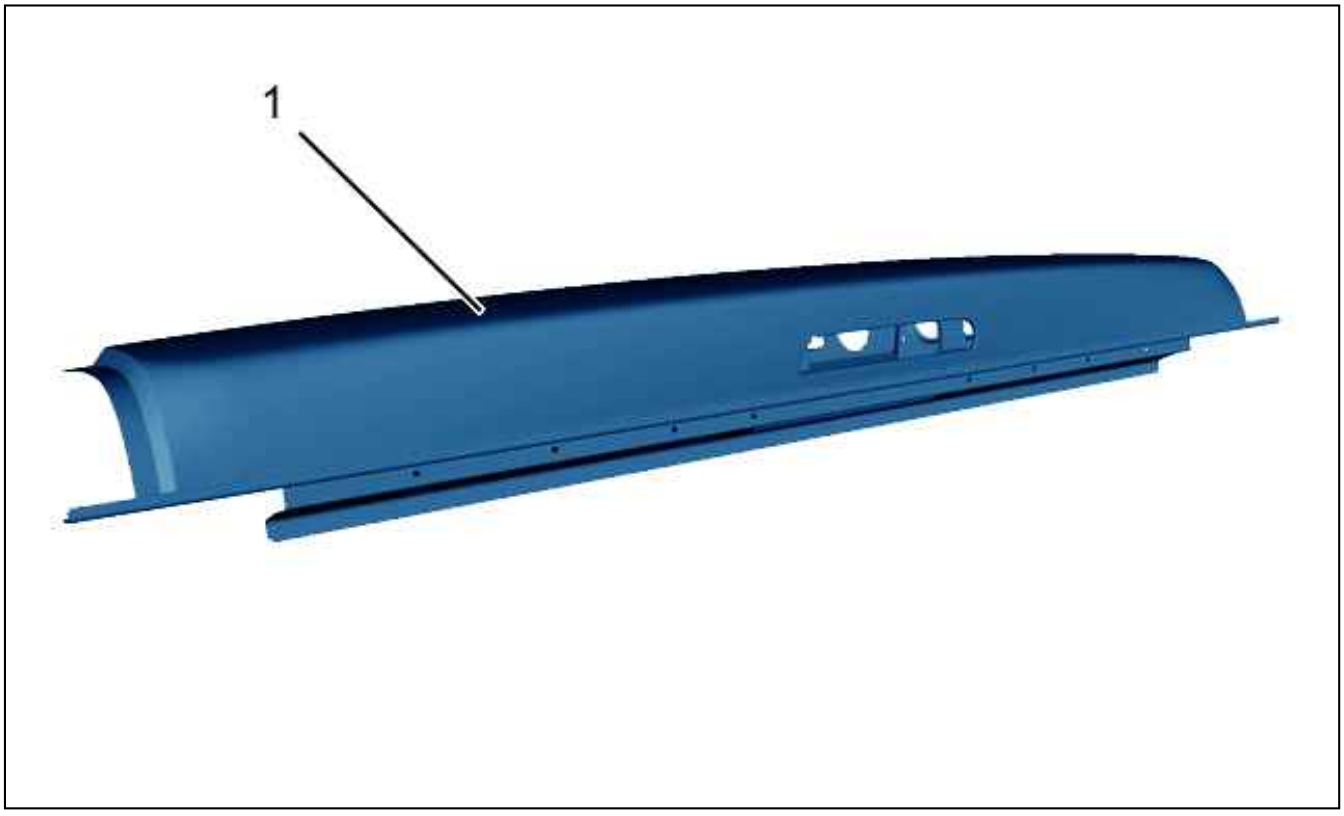

Figure : C4BP1R0D

Figure 1.
(1) Upper rear crossmember, complete.

3. Composition of the replacement parts

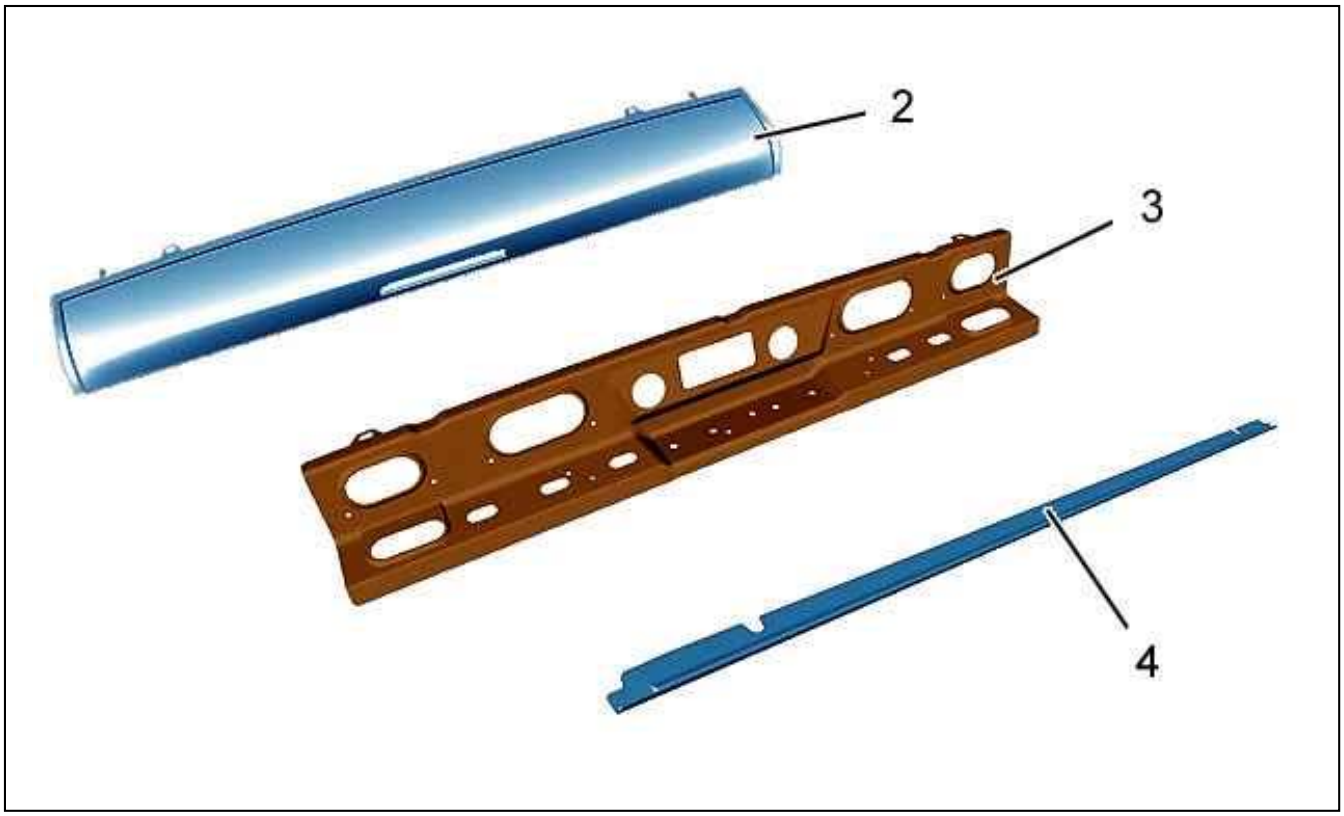

Figure : C4BP1R1D

Figure 2.
(2) Upper rear crossmember.
(3) Upper rear crossmember inner panel.
(4) Upper rear crossmember channel.

4. Preparation of the new part

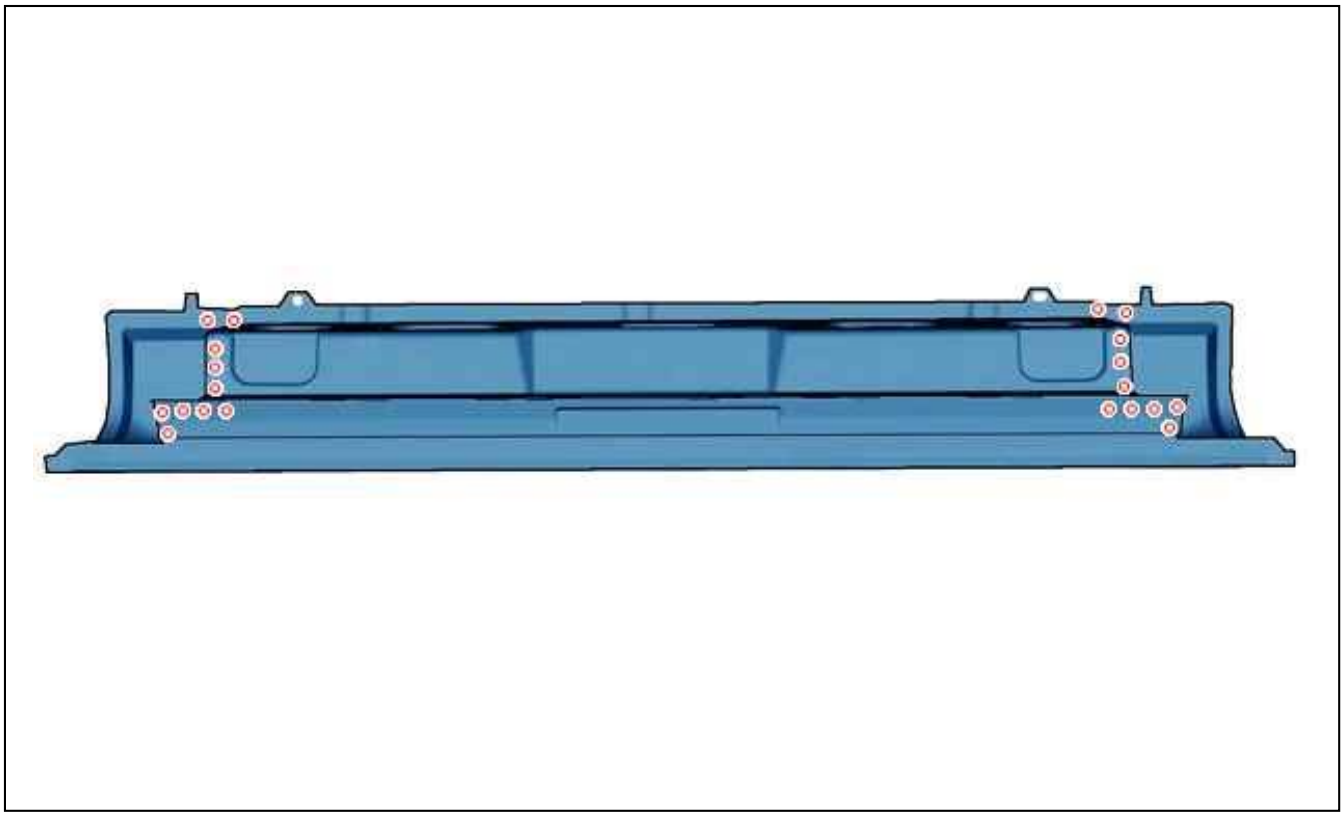

Figure : C4BP1R2D

Figure 3.
Mark then drill to Ø 6 mm for later plug welding (24 holes).
Prepare the mating edges .

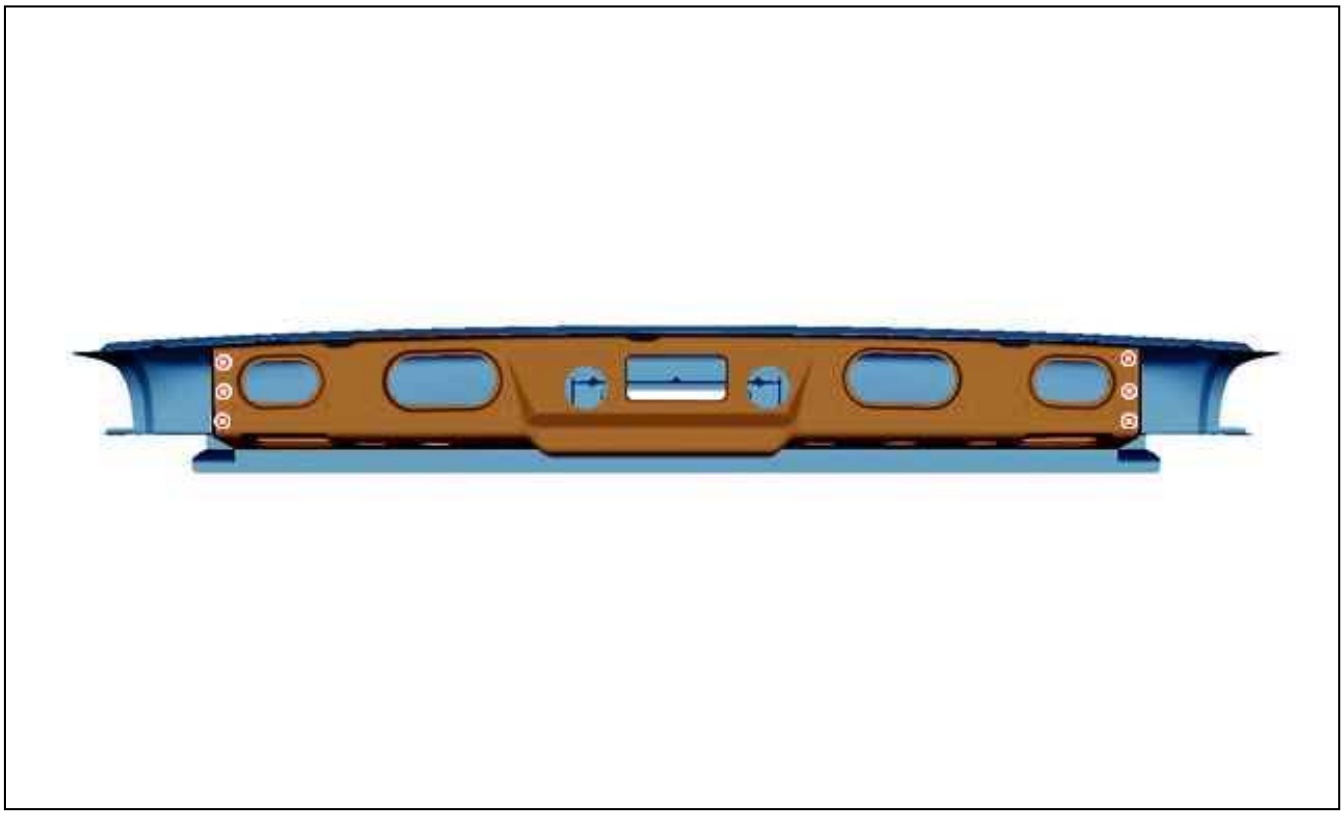

Figure : C4BP1R3D

Figure 4.
Mark then drill to Ø 6 mm for later plug welding (10 holes).
Prepare the mating edges .

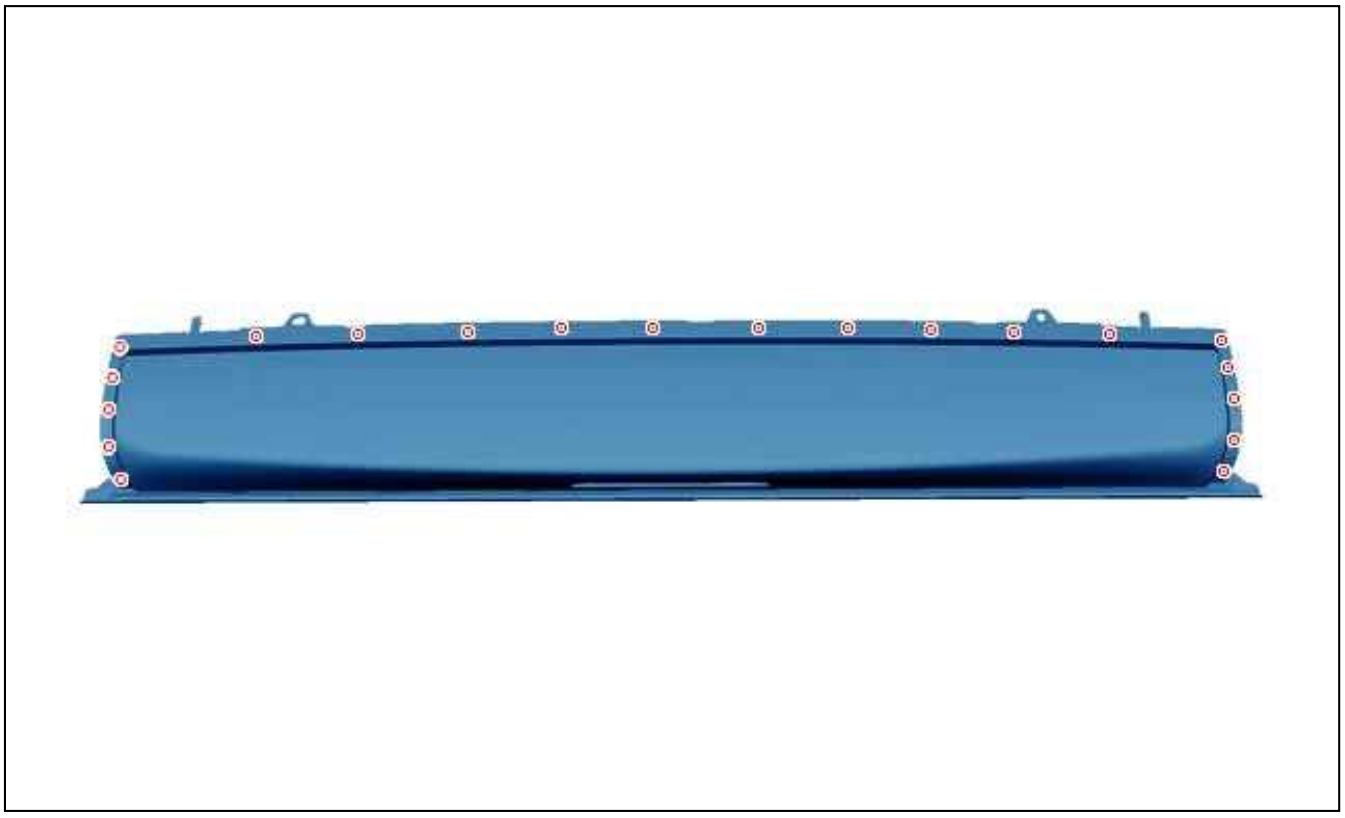

Figure : C4BP1R4D

Figure 5.
Mark then drill to Ø 6 mm for later plug welding (20 holes).
Prepare the mating edges .

5. Cutting out

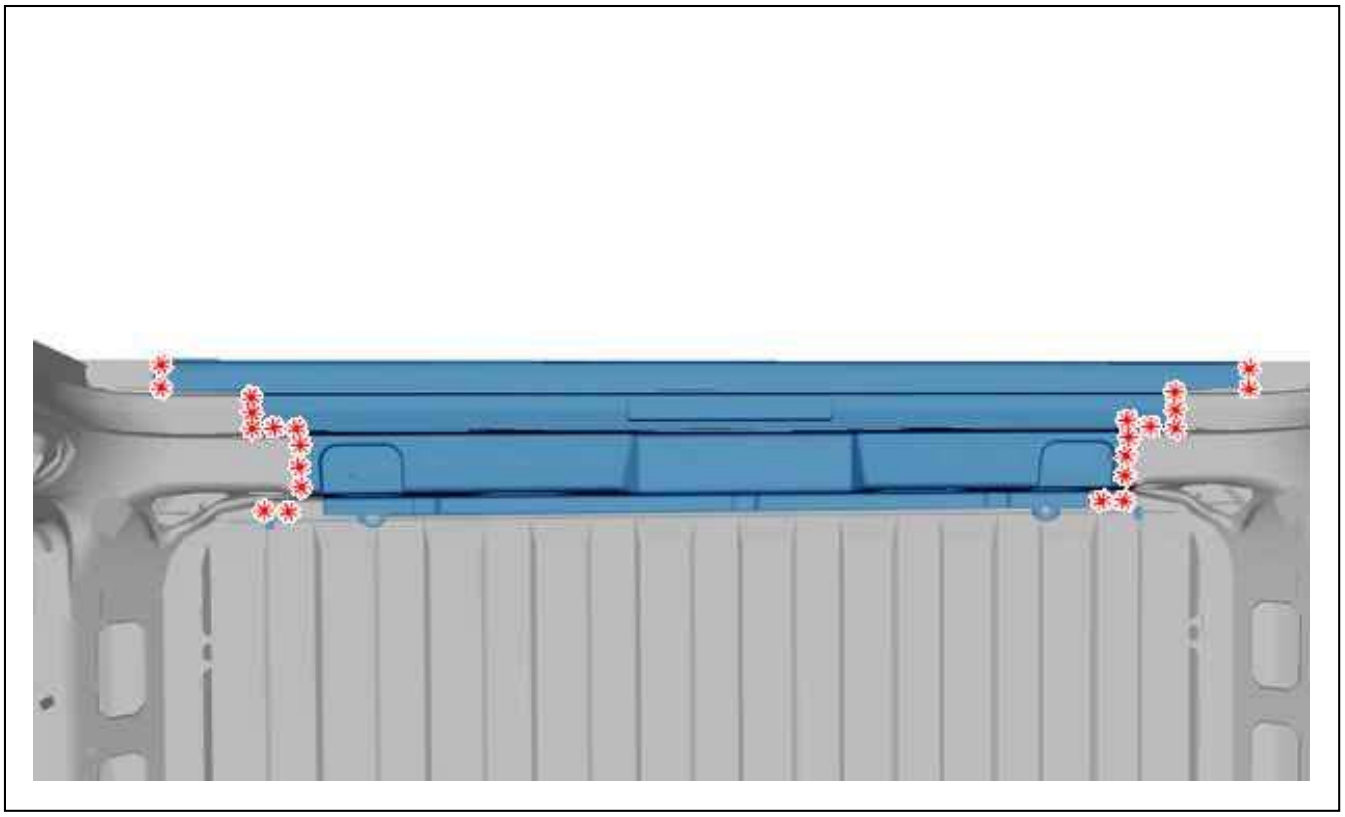

Figure : C4BP1R5D

Figure 5.
Cut out the spot welds .

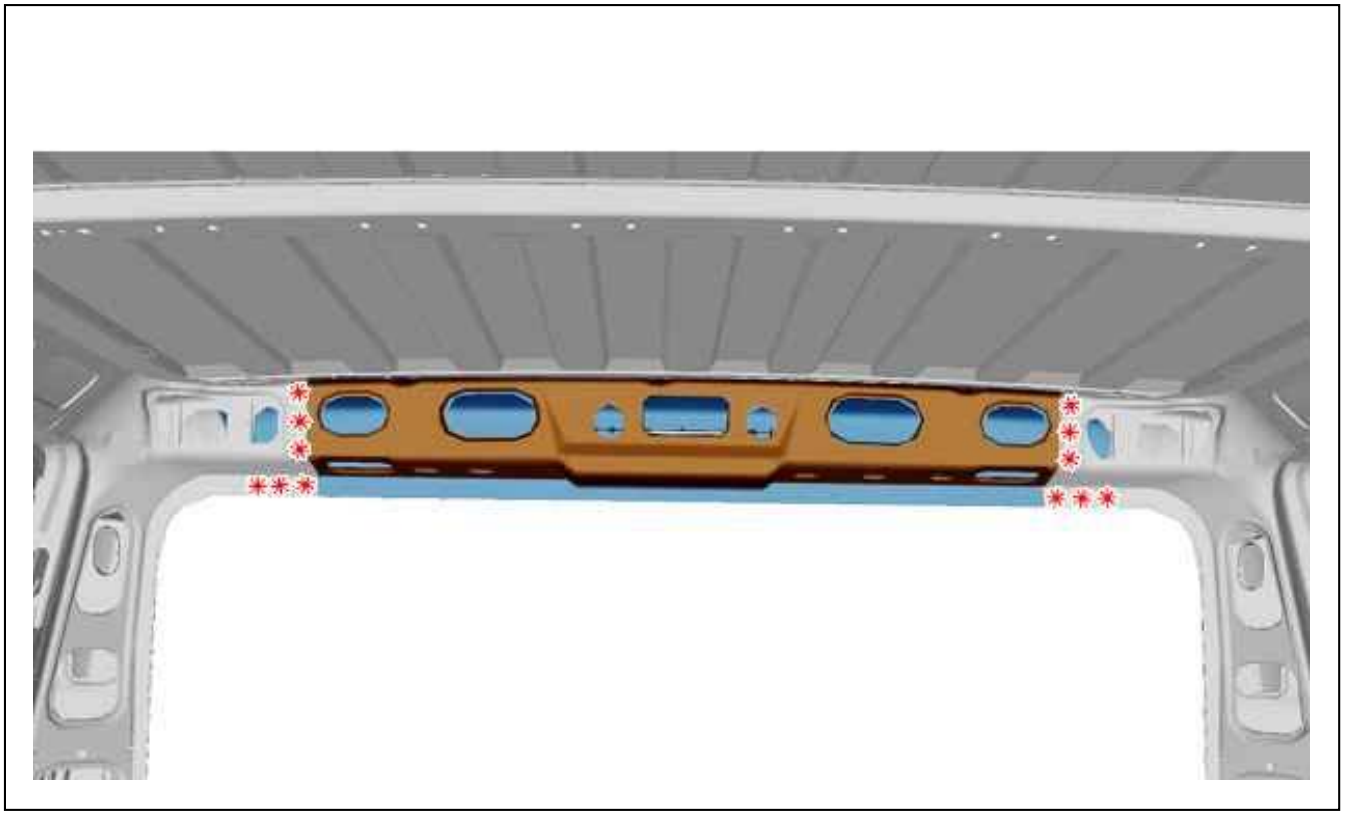

Figure : C4BP1R6D

Figure 6.

Cut out the spot welds .

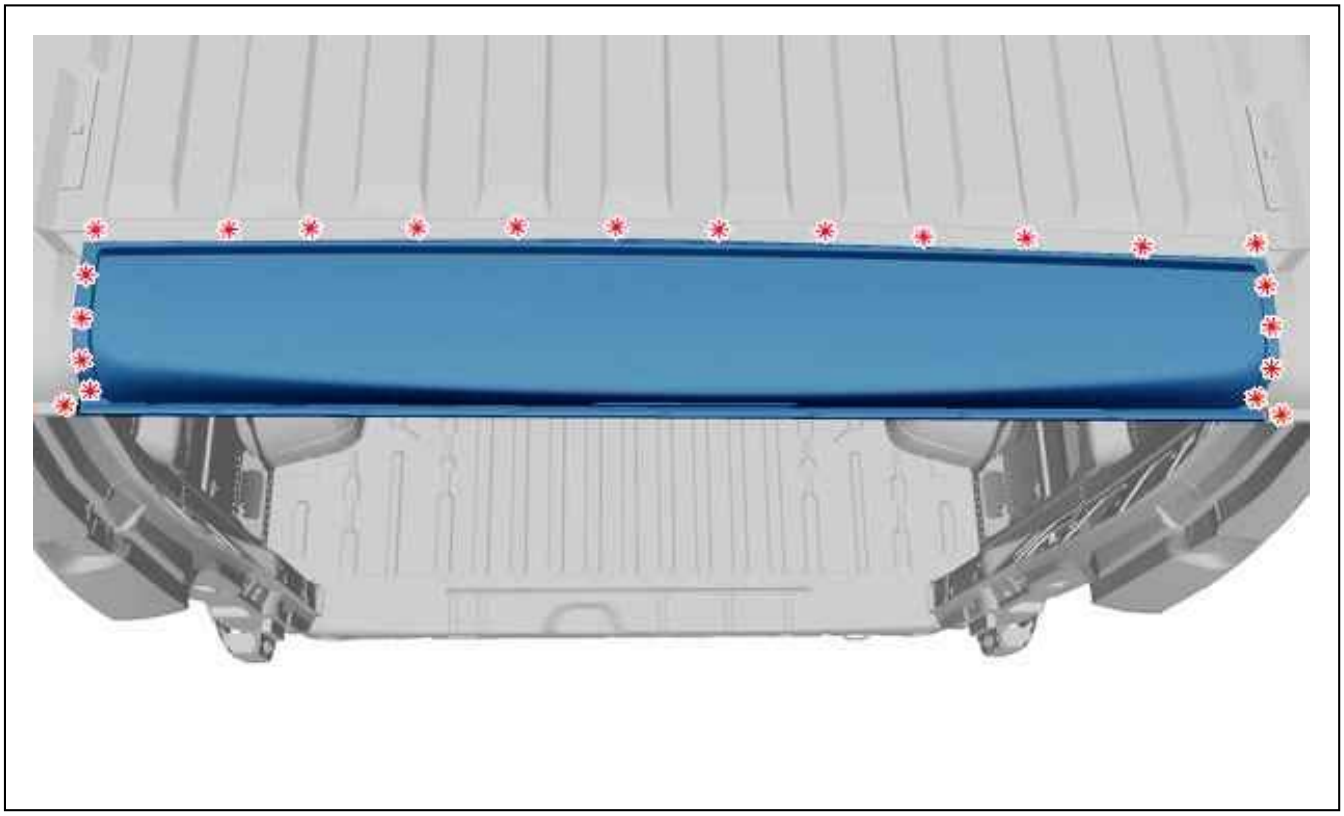

Figure : C4BP1R7D

Figure 7.
Cut out the spot welds .
Remove the upper rear crossmember assembly .

6. Bodywork cleaning and preparation

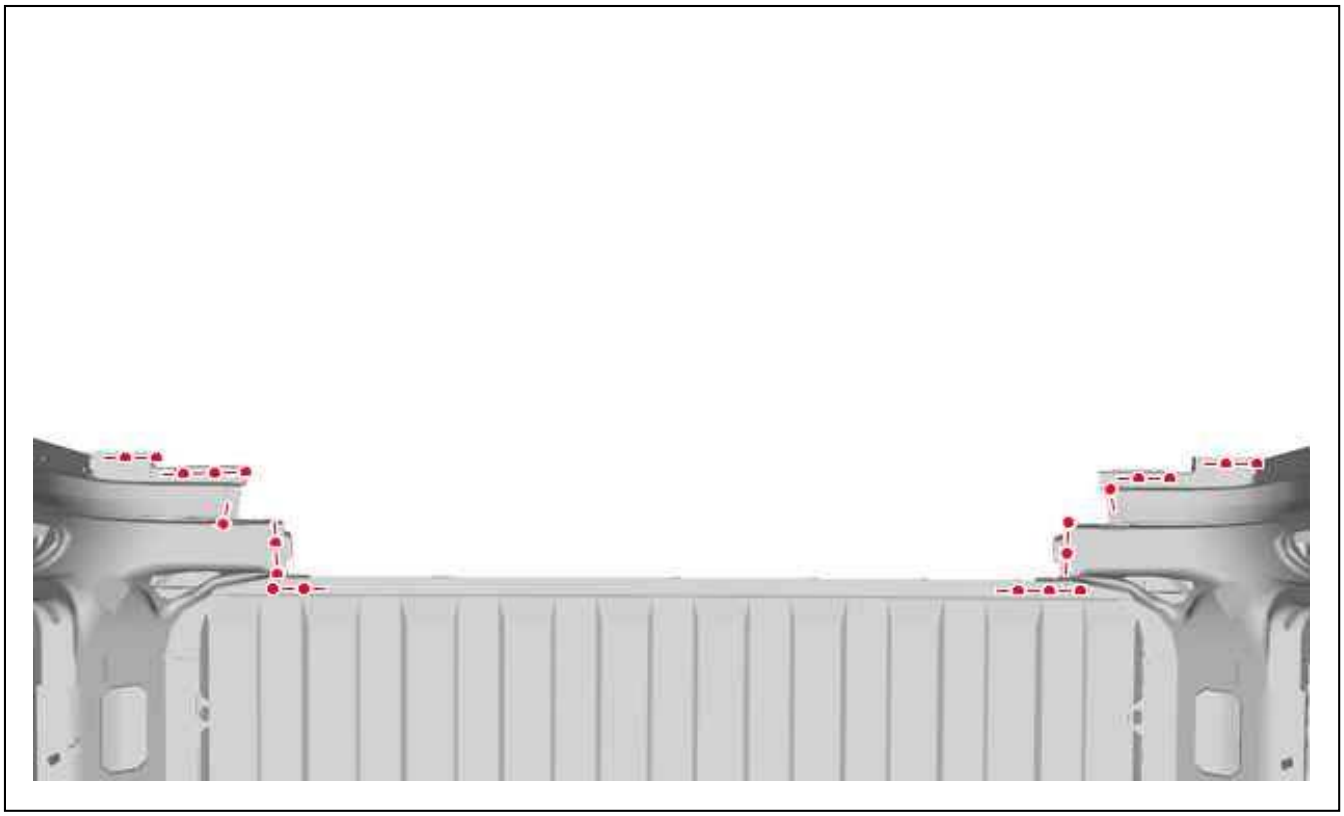

Figure : C4BP1R8D

Figure 8.
Align the mating edges and protect them with a weldable primer.

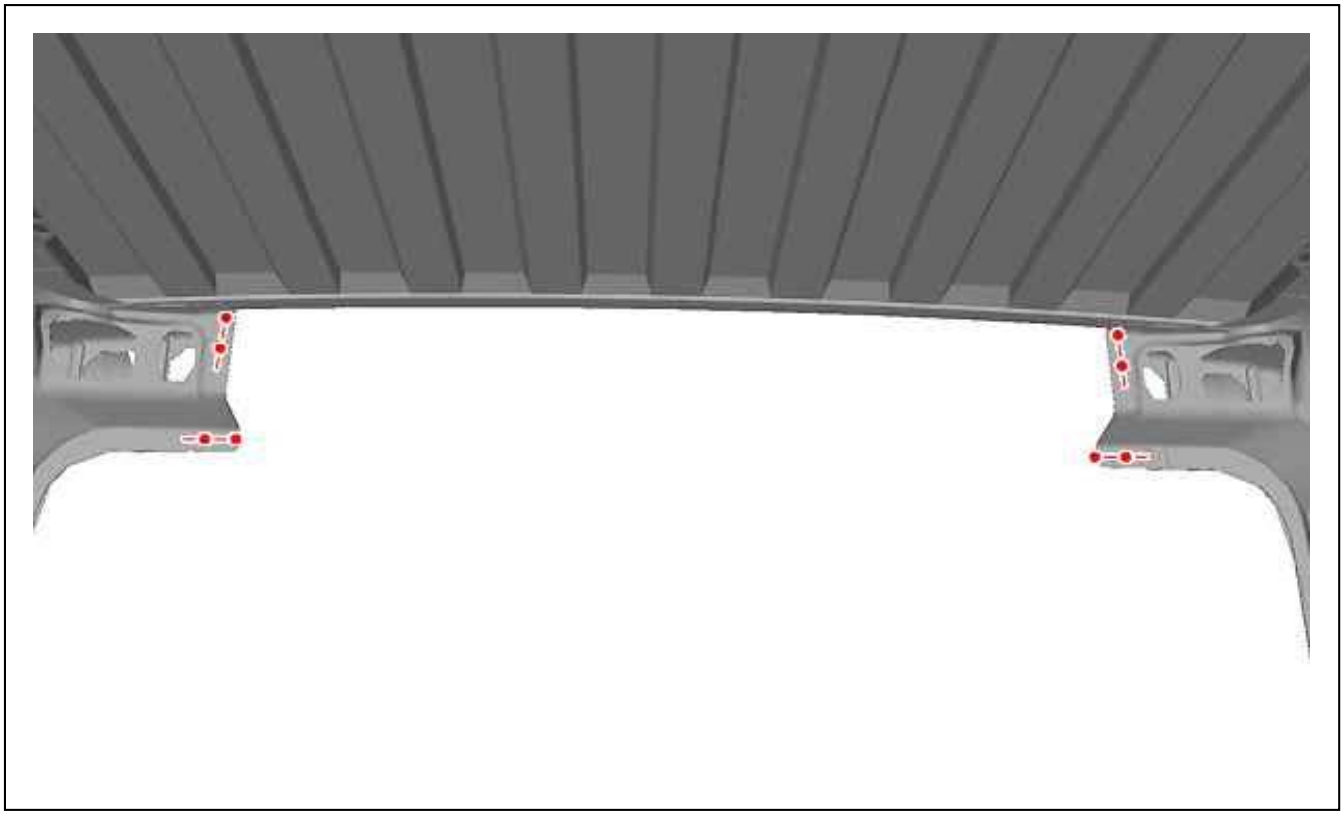

Figure : C4BP1R9D

Figure 9.

Align the mating edges and protect them with a weldable primer.

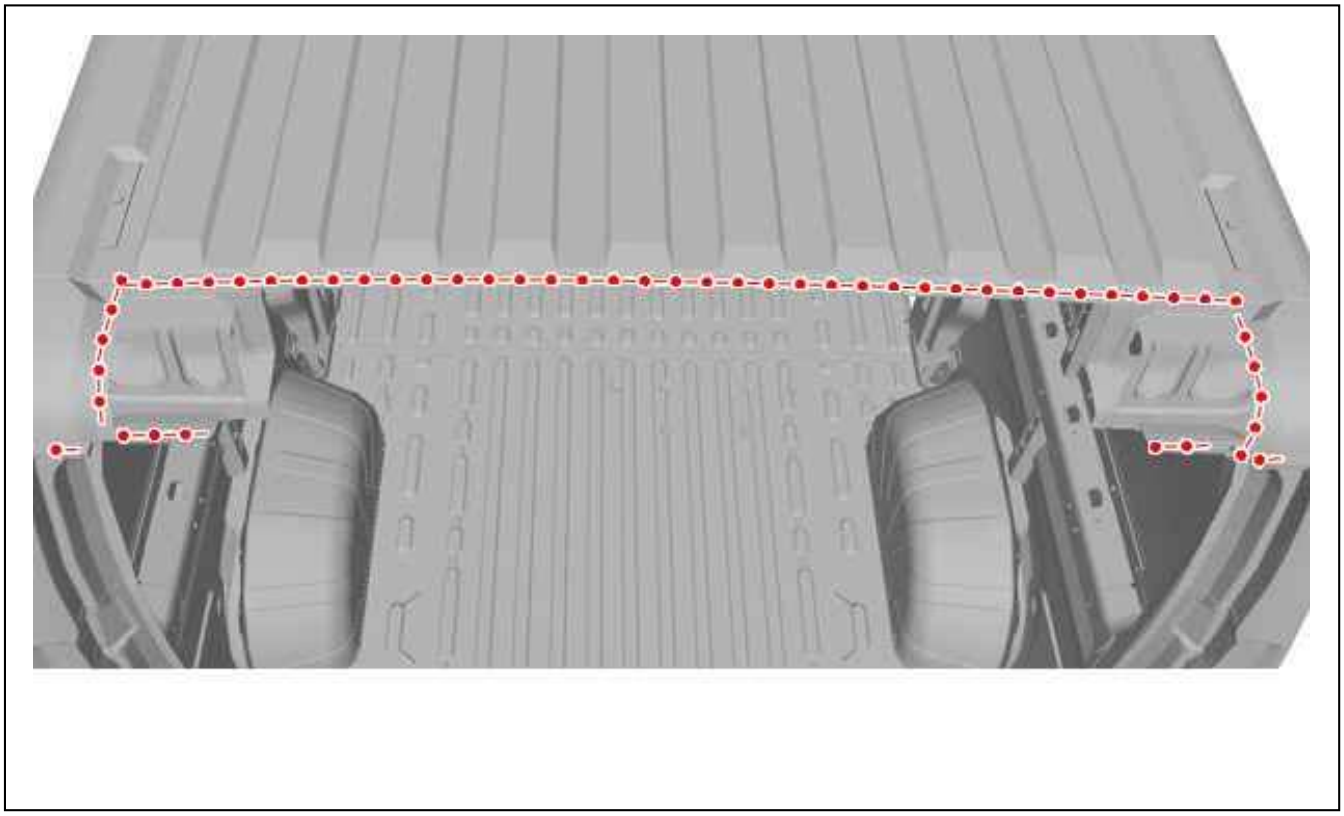

Figure : C4BP1RAD

Figure 10.
Prepare the mating edges .
Align the mating edges and protect them with a weldable primer.

7. Adjustment

Present the elements, allowing for adjustment.
Check the fits and clearances (see the relevant operation).

8. Welding

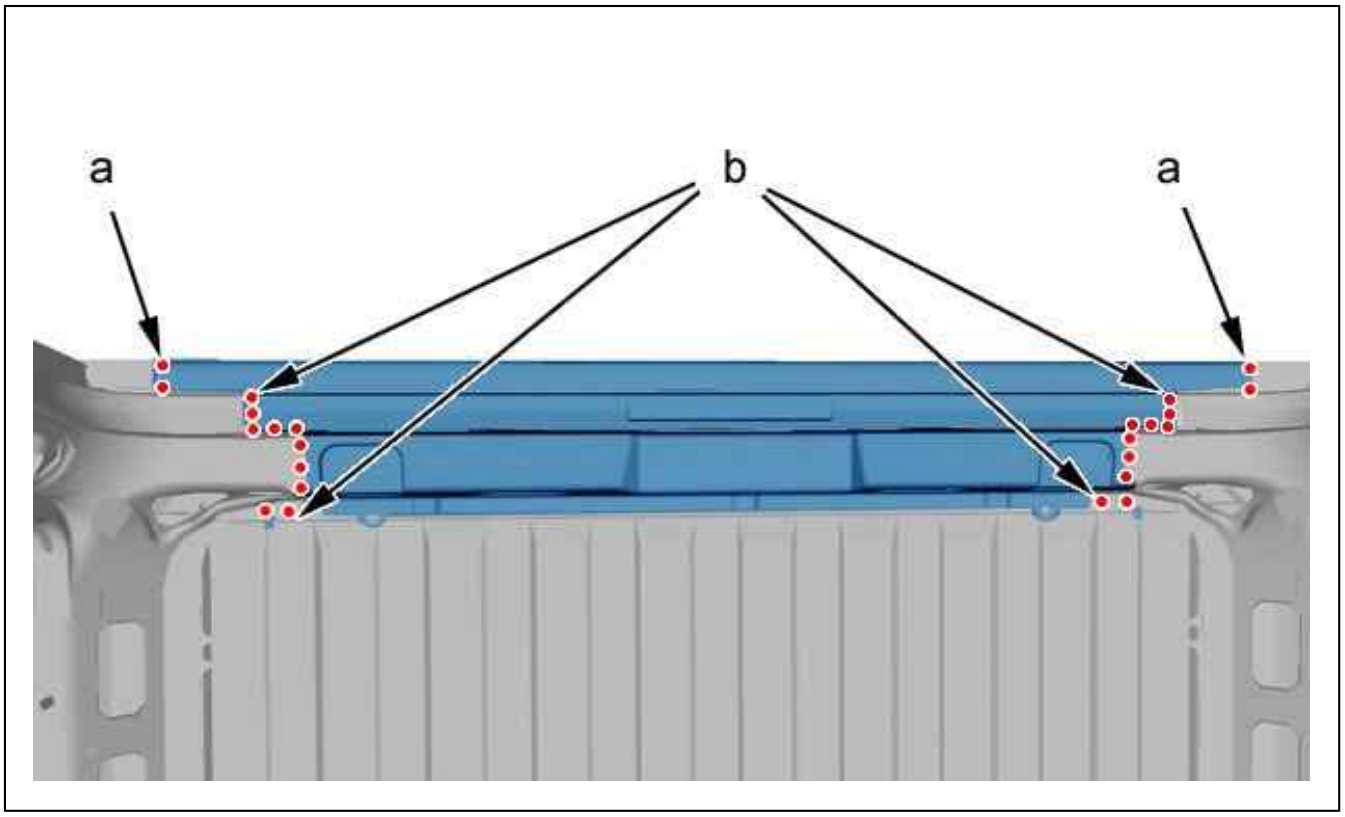

Figure : C4BP1RBD

Figure 11.
Weld with electric spot welds (at "a").
Weld with plug welds (at "b").
Grind the plug welds ..

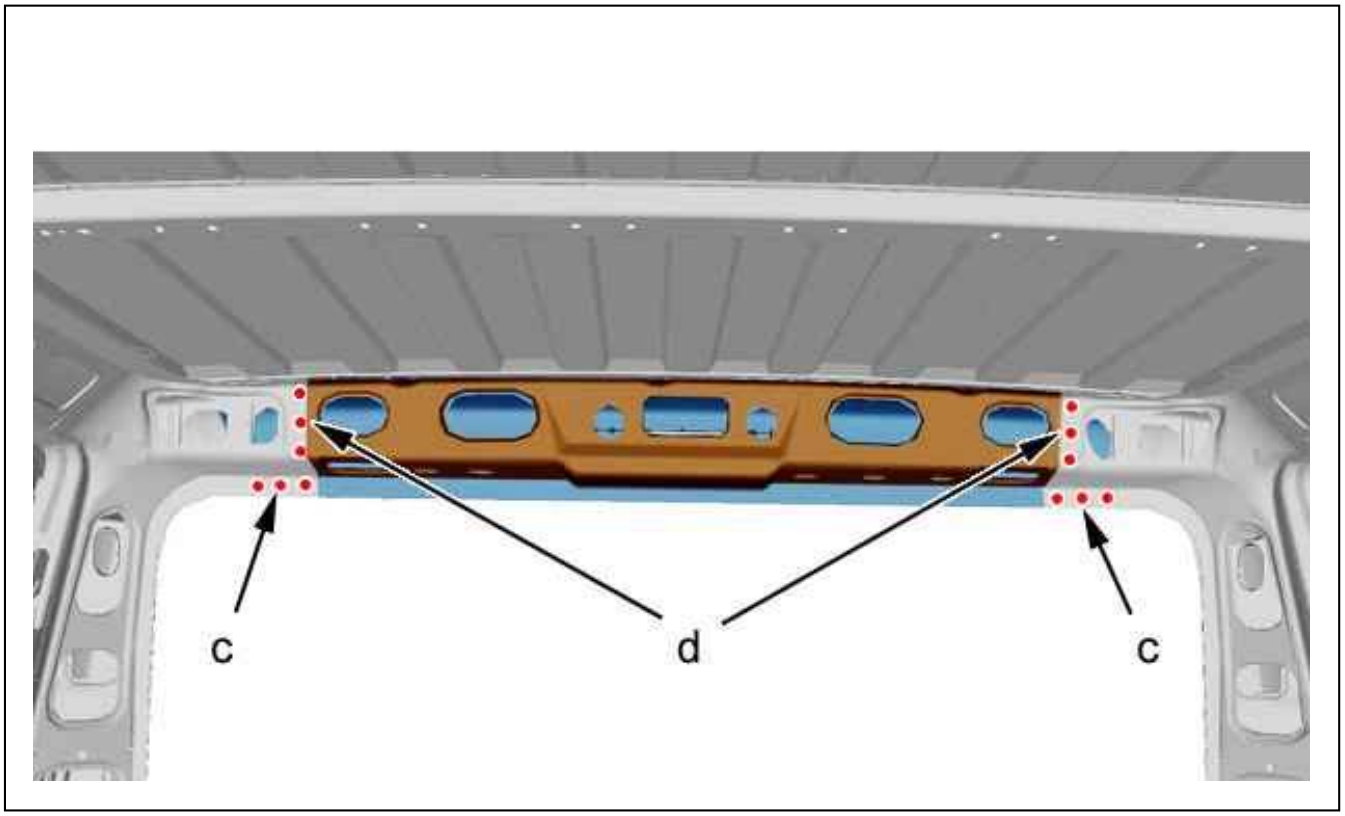

Figure : C4BP1RCD

Figure 12.
Weld with electric spot welds (at "c").
Weld with plug welds (at "d").
Grind the plug welds.

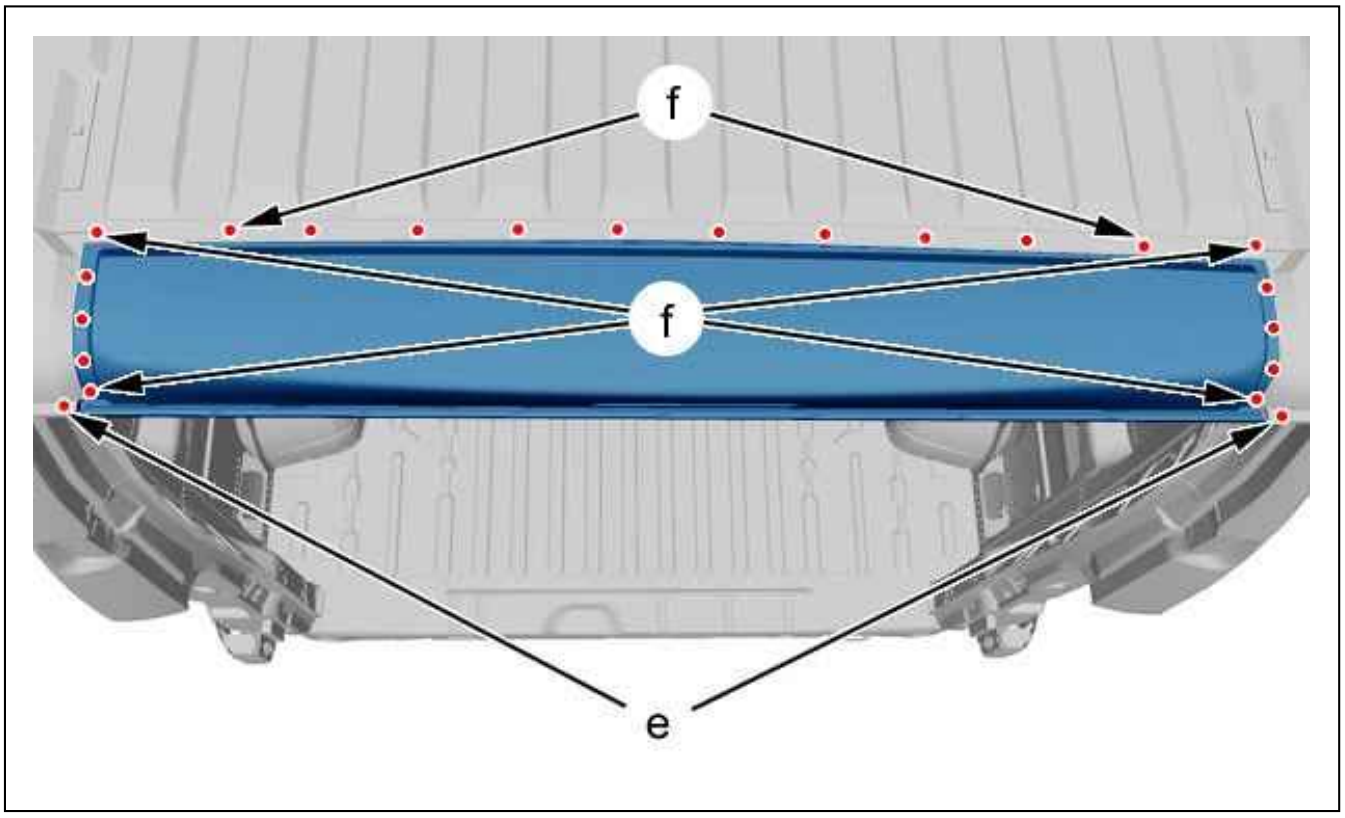

Figure : C4BP1RDD

Figure 13.
Weld with electric spot welds (at "e").
Weld with plug welds (at "f").
Grind the plug welds.

9. Sealing

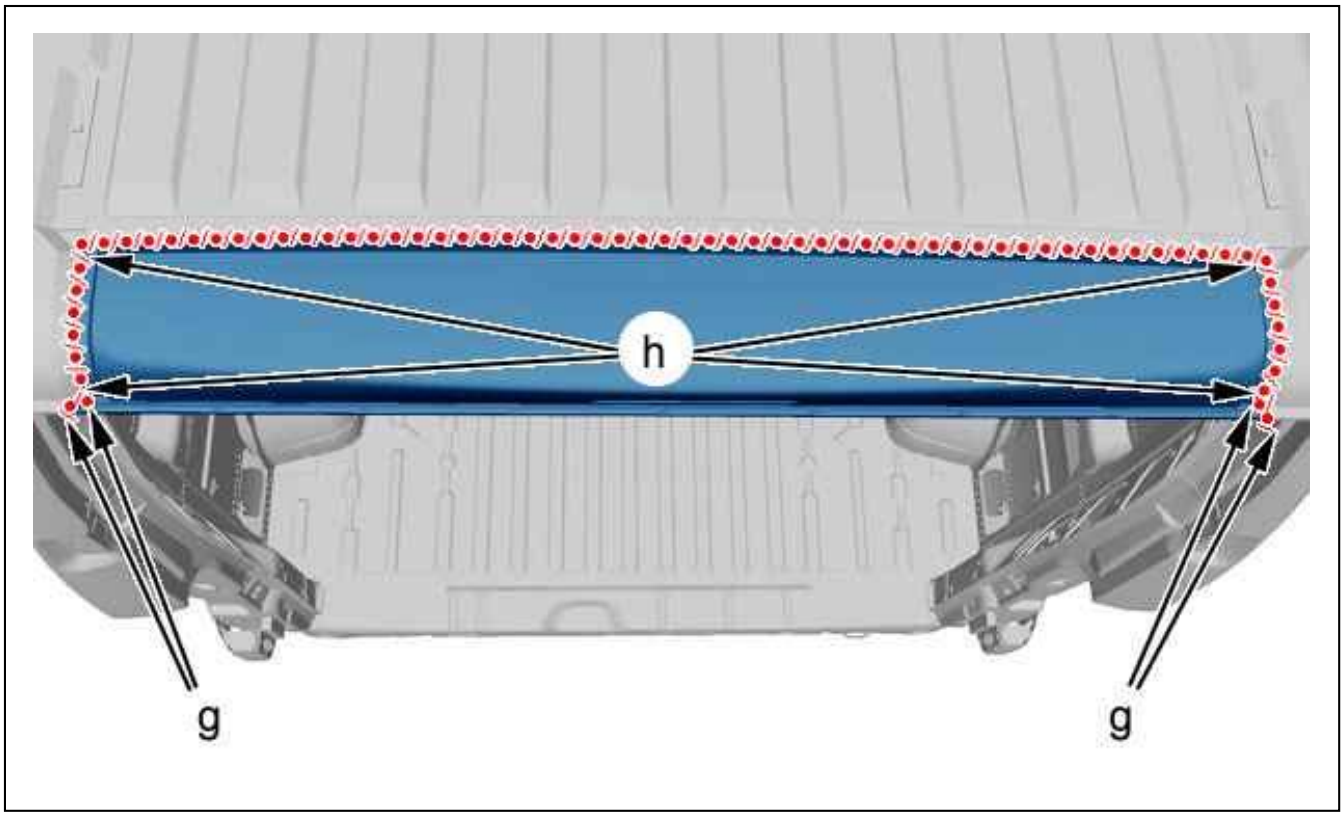

Figure : C4BP1RED

Figure 14.
Apply a phosphate-print layer on the zone laid bare.
Apply a sealing mastic index A4 (at "h") (see the relevant operation).
Apply a sealing mastic index A1 (at "g") (see the relevant operation).

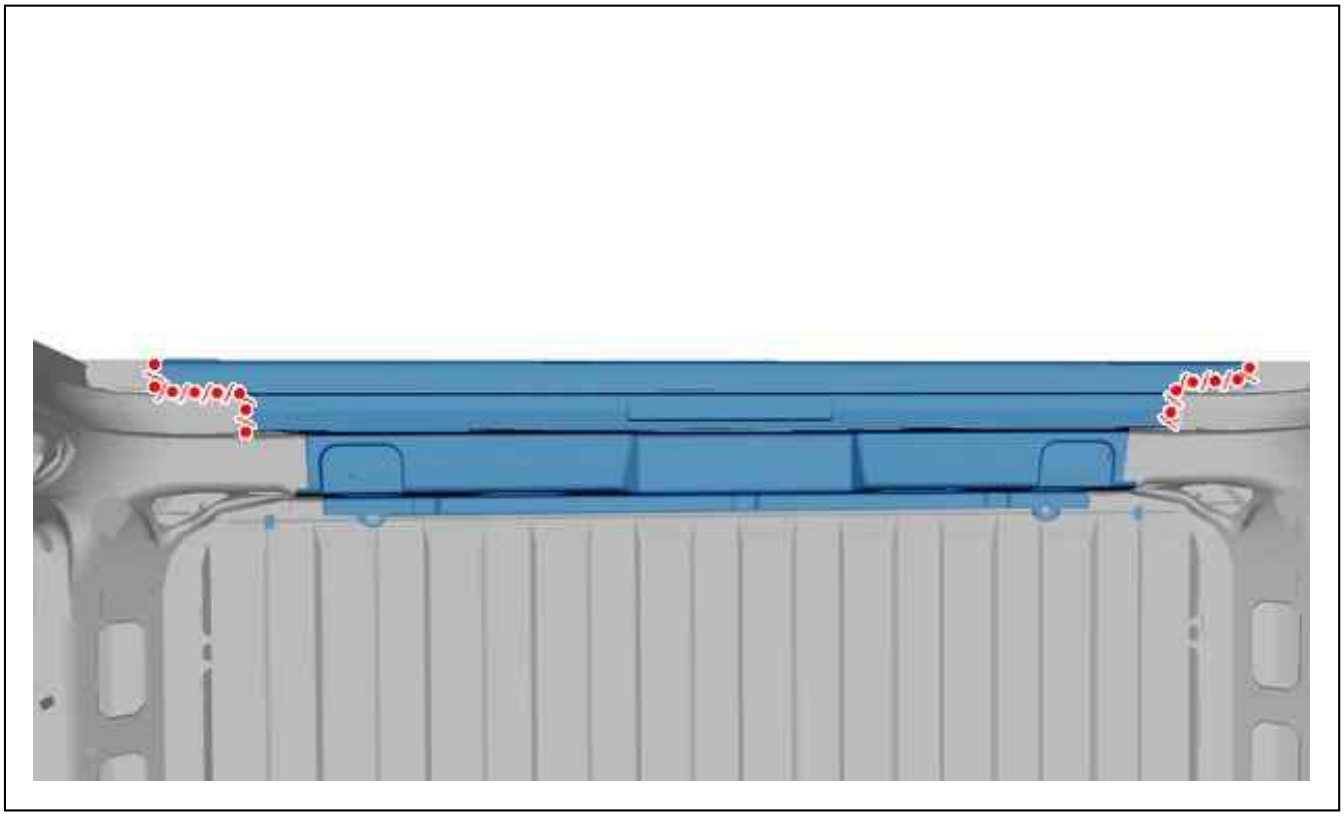

Figure : C4BP1RFD

Figure 15.
Apply a phosphate-print layer on the zone laid bare.
Apply a sealing mastic index A1 (see the relevant operation).

10. Protection

Paint then spray into the hollow sections, product index C5, in the repair zone (see the relevant operation).

11. Reinitialisation

Reconnect the battery.

ESSENTIAL : Perform the operations to be carried out following reconnection of the battery.

REPAIR : IMPACT ON THE LAMINATED WINDOWS PRINCIPLES OF REPAIR

ESSENTIAL : Observe the safety and cleanliness recommendations .

1. Tooling

1 Repair kit (Manual injection).
1 Repair kit (Injection using the pressure/vacuum pump).

N.B. : Refer to the tools catalogue.

2. Windscreen repair area

CAUTION : Read the repair manual in full.

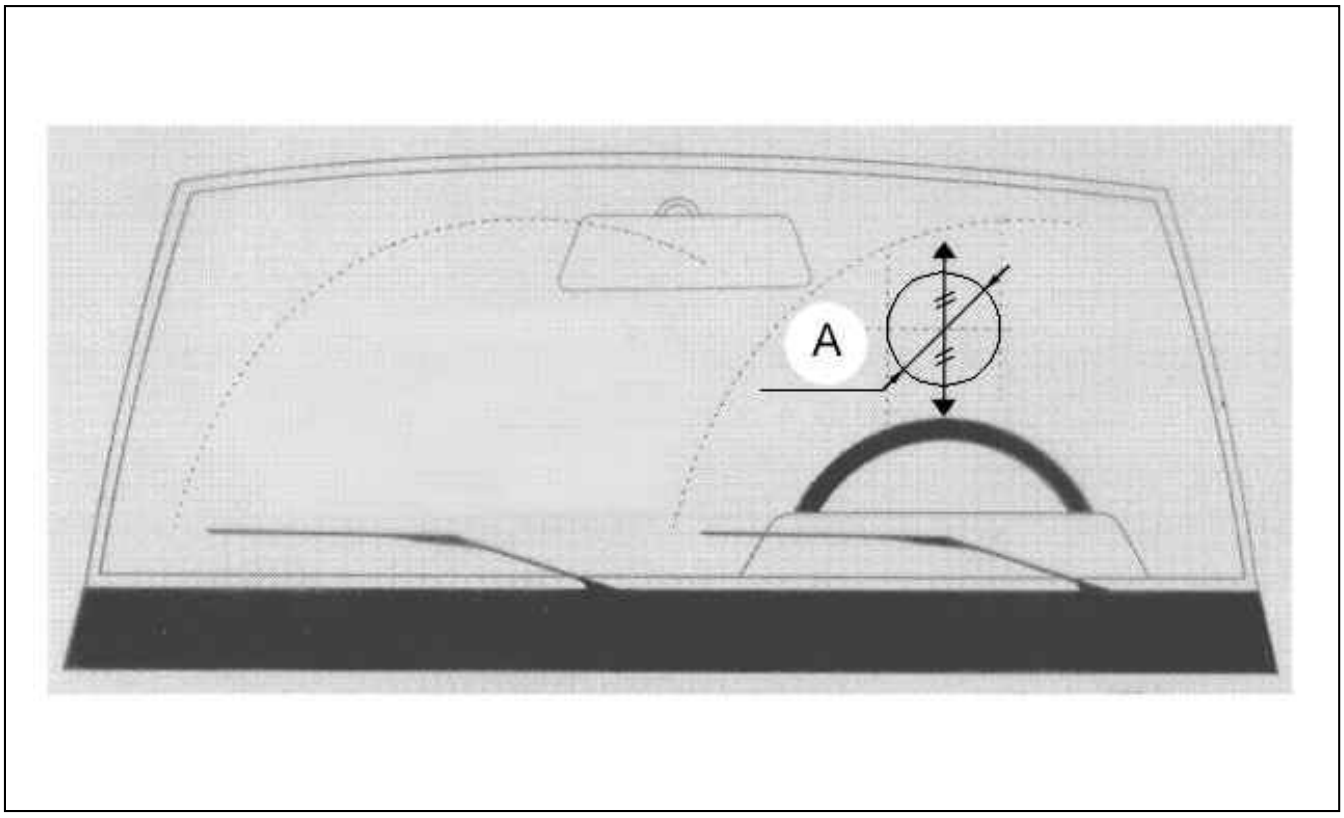

Figure : C5CM06WD

"A" = 300 mm.

ESSENTIAL : The repair of a windscreen in the field of vision of the driver, see "A", is prohibited.

ESSENTIAL : If the impact is more than 50 mm : Replace the windscreen.

3. Types of impact

3.1. Bubble or half-bubble impacts

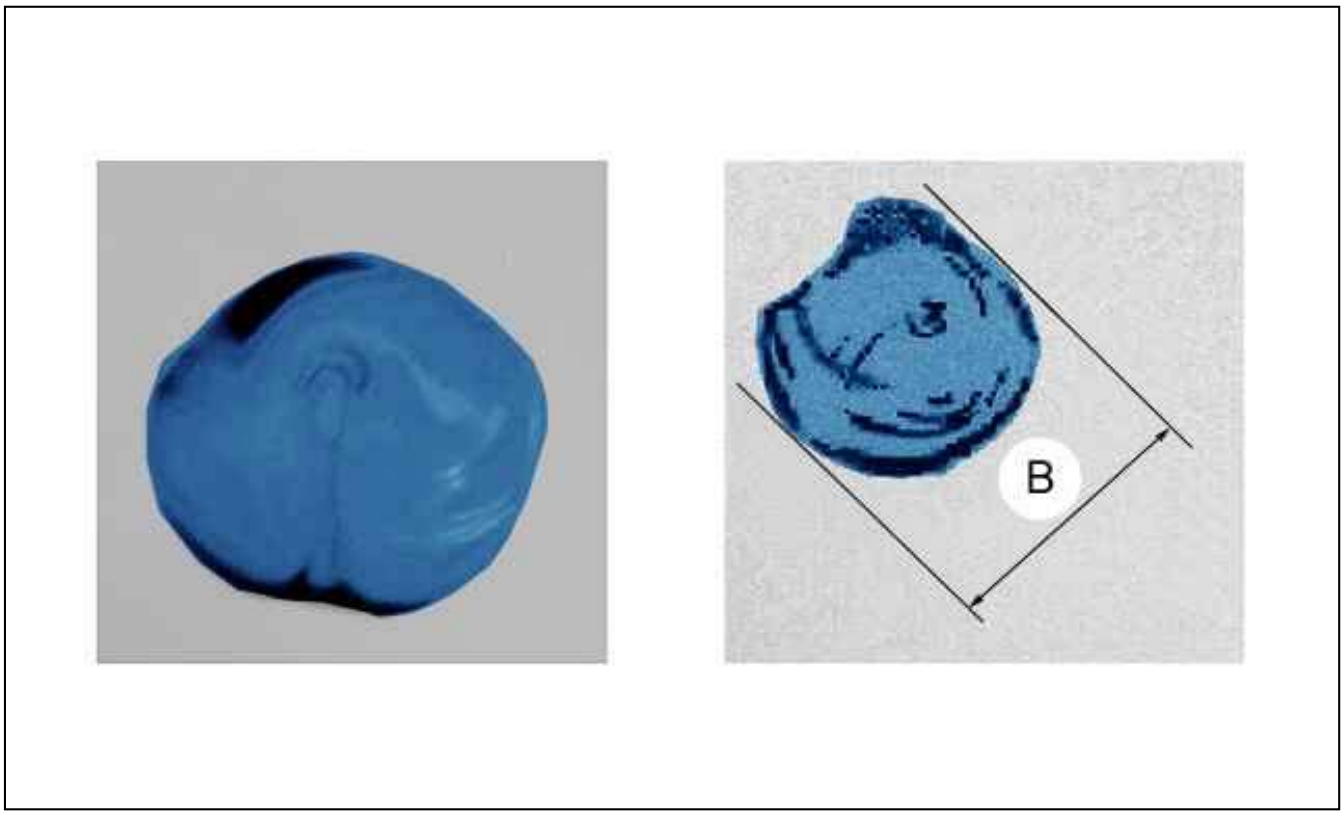

Figure : C5CM06XD

"B" = 20 mm (Max).

N.B. : Formation of a small hole at the point of impact and a core in the form of a cone is created.

3.2. Star impact

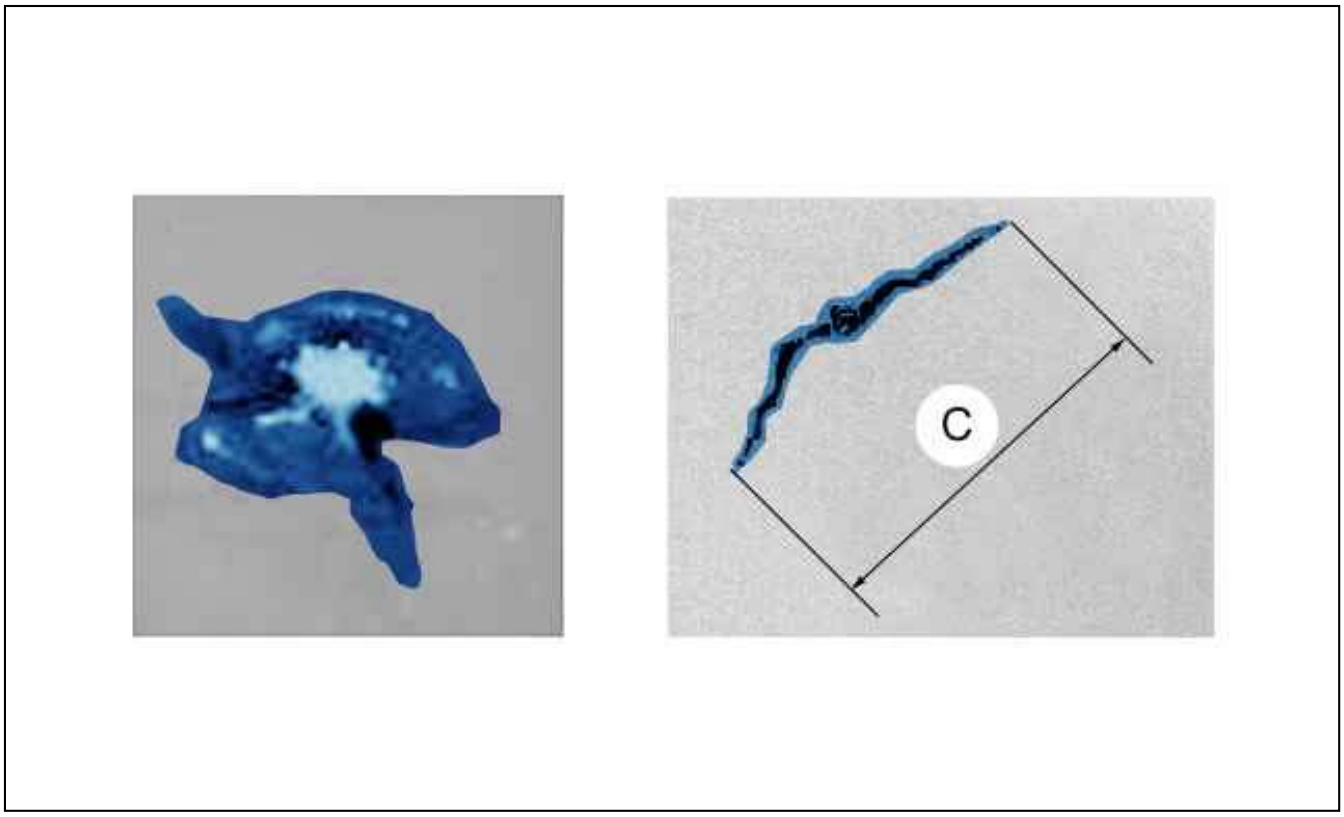

Figure : C5CM06YD

"C" = 50 mm (Max).
Formation of cracks or worse, spreading from the point of impact.

3.3. Star bubble or combination impact

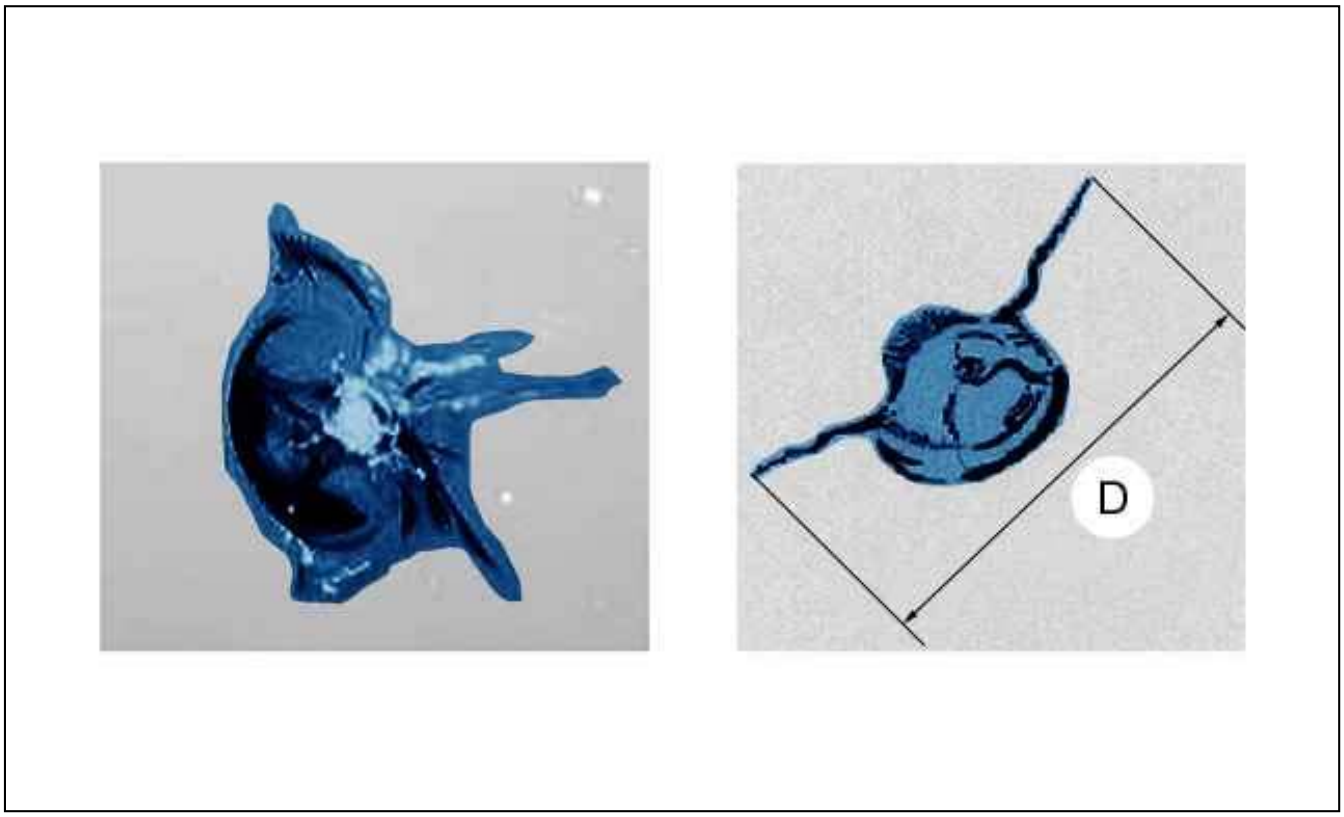

Figure : C5CM08PD

"D" = 50 mm (Max).
Formation of cracks or worse, spreading from the point of impact.

4. Precautions regarding use

N.B. : Numerous factors can affect the result of a repair.

The most important points to be complied with are the following :

- Check for the presence of moisture in the impact
- Check that the temperature of the window is between 10°C and 30°C
- Protect the resin from ultraviolet rays
- Control the amount of pressure during the injection of the impact

4.1. Humidity

N.B. : If moisture is present, dry out the impact using the heating lamp.

CAUTION : Heat the laminated window moderately using the heating lamp as any other excessively strong anc excessively violent heat source may enlarge the impact and crack the laminated window.

4.2. Temperature

The ideal temperature for repairing a laminated window is between 10°C and 30°C.

4.3. Ultraviolet rays

Repair away from ultraviolet rays.

4.4. Pressure

Follow the pressure level recommendations in the repair manual.

5. Repair

N.B. : Proceed in the same way for an athermic windscreen.

Place a protective cloth on the bonnet for setting down the tools.
Clean the laminated window around the impact using a dry, lint-free cloth.

N.B. : Do not spray any products onto the impact.

5.1. Fitting

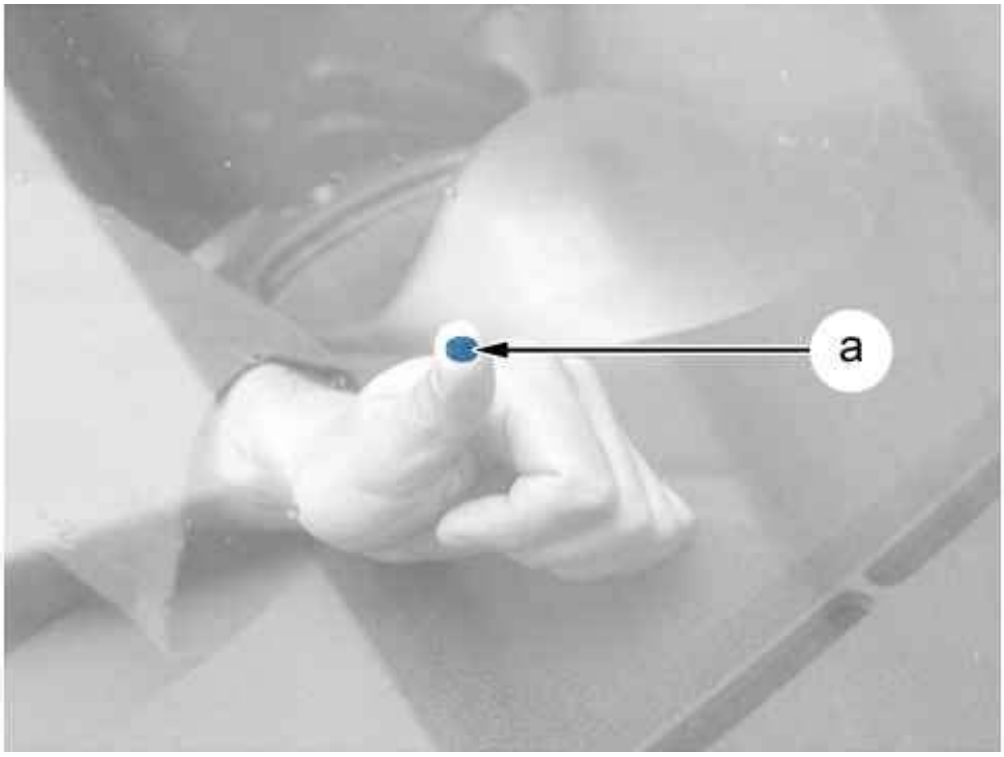

Figure : C5CM070D

Exert slight pressure on the impact at "a" using your thumb to ensure that it is free of the beginnings of any cracks.

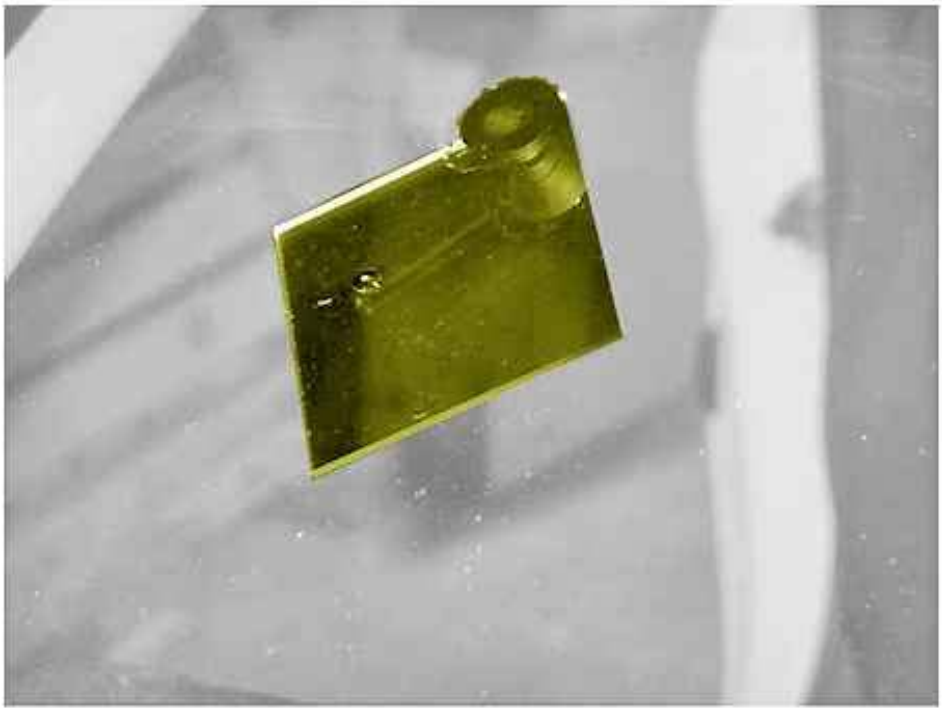

Figure : C5CM08QD

Apply adhesion product to the suction cup.
Put the rear view mirror in place inside the passenger compartment level with the impact.

N.B. : The mirror will serve as a guide throughout the repair.



Figure : C5CM08YD

Drill out the point of impact until contact is made with the sheet of polyvinyl butyral ; Using a drill and bit.

5.2. Injection process

2 Processes for injecting the resin :

- 1 Manual process
- 1 Process using a pressure/vacuum pump

N.B. : Refer to the repair manual : Before removing the injection equipment, check that there are no more particles o air in the impact.

5.3. Drying and finishing

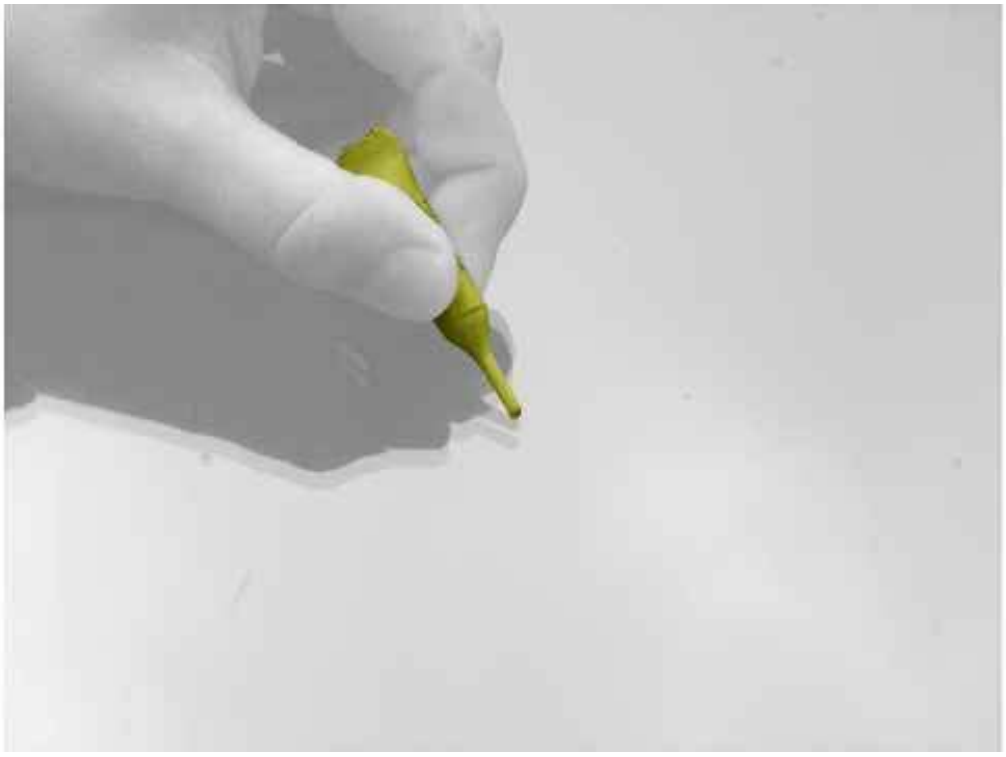

Figure : C5CM08ZD

Apply a drop of finishing resin.

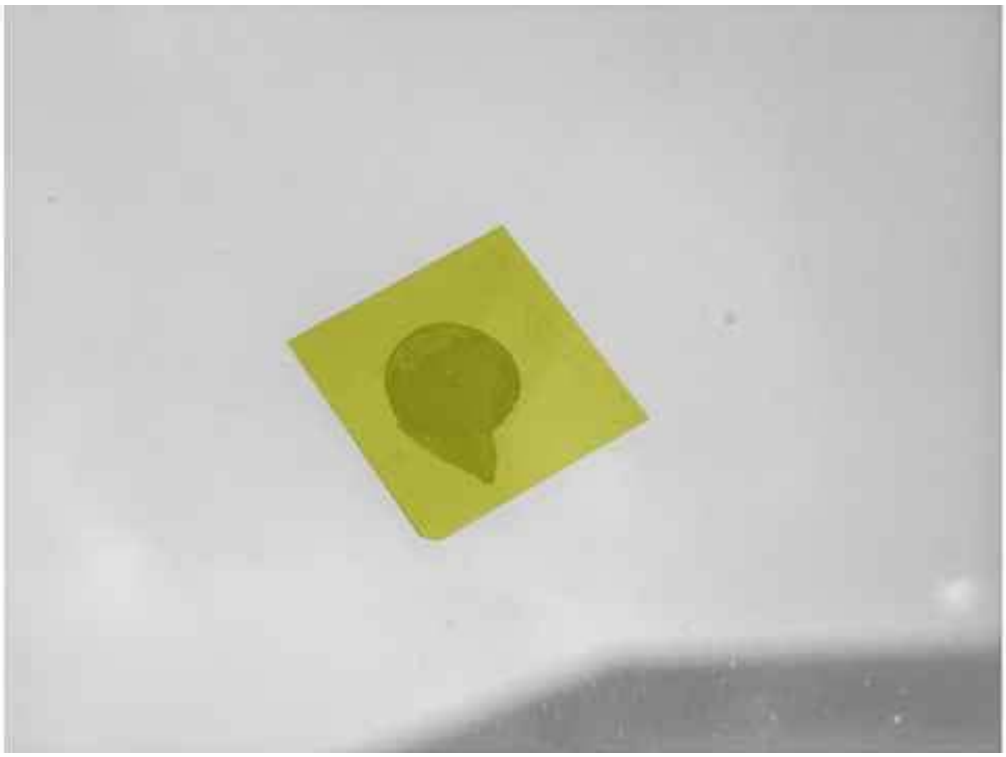

Figure : C5CM090D

Put a small plastic sheet on the finishing resin.
Allow the small plastic sheet to rest naturally so that the finishing resin covers the whole impact.

N.B. : Do not touch the finishing resin with your fingers.

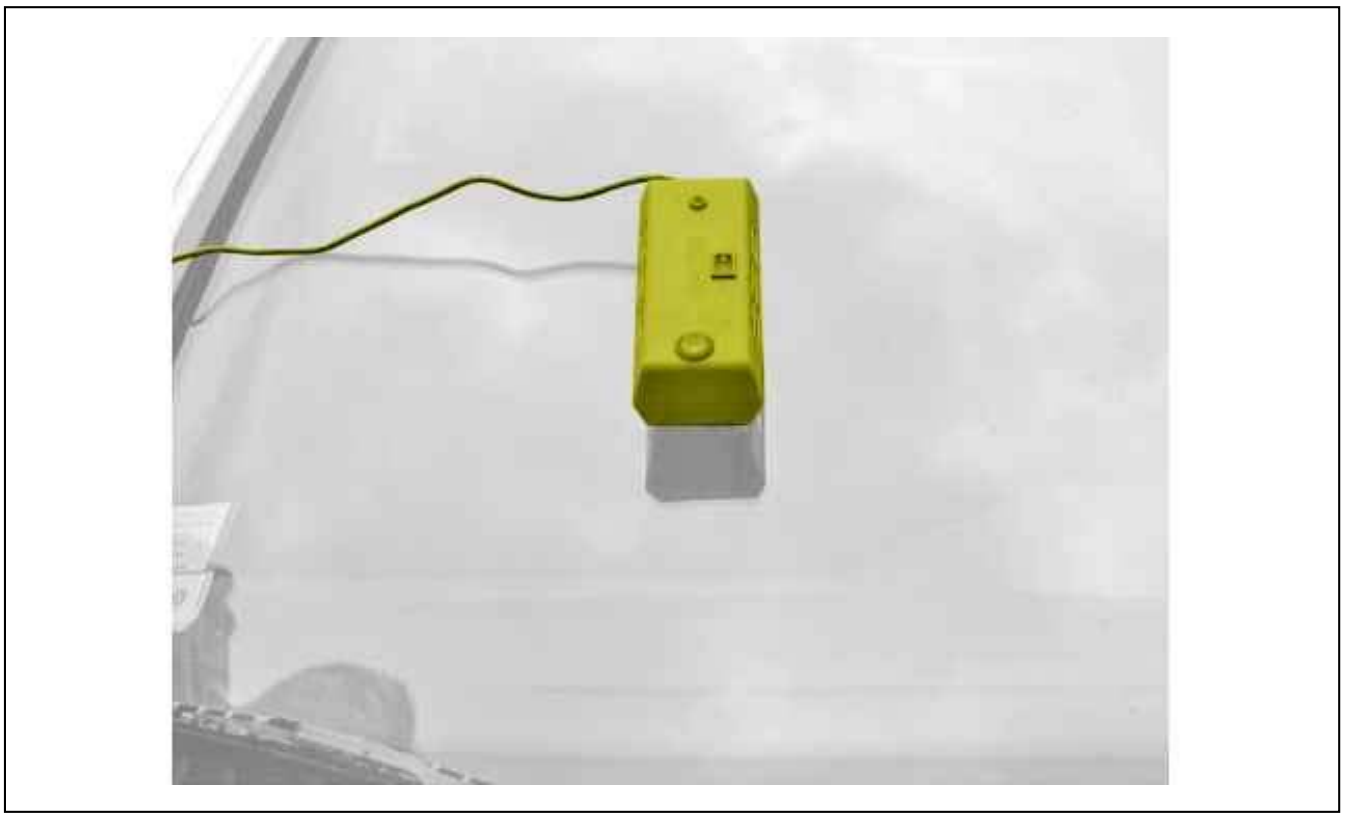

Figure : C5CM091D

Put the ultraviolet lamp in place on the small plastic sheet on the exterior side of the laminated window.
Leave to dry for 15 minutes (minimum).
Remove :

- The ultraviolet lamp
- The plastic sheet

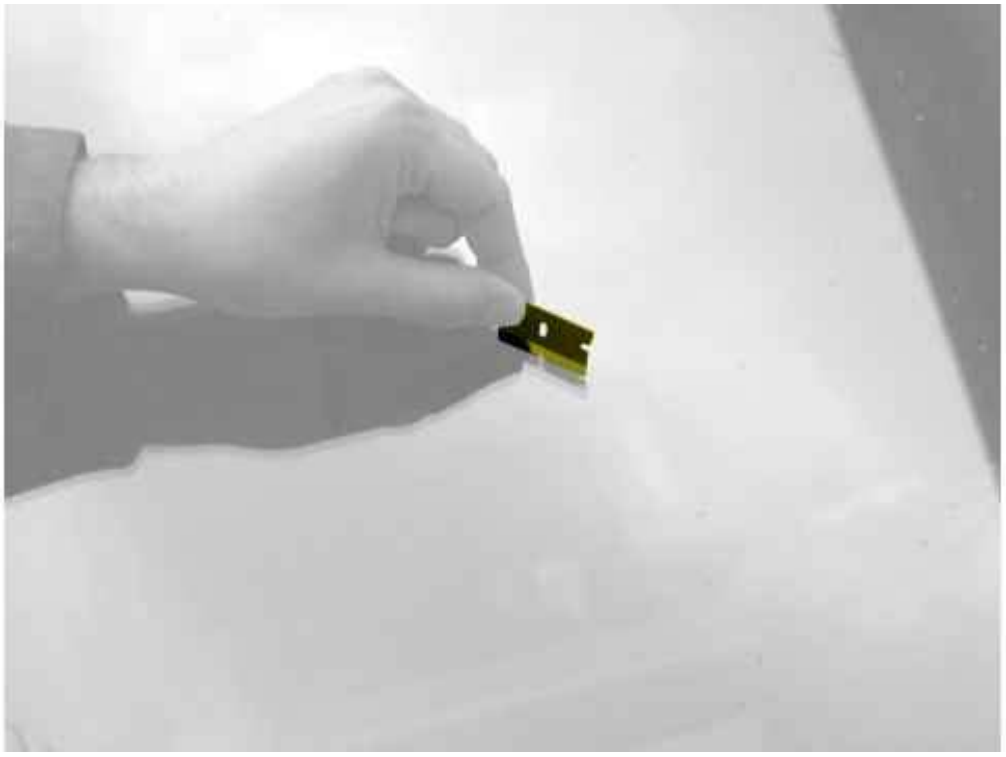

Figure : C5CM092D

Scrape off the surplus finishing resin using the scraper.

CAUTION : Scrape off the surplus perpendicular to the laminated window and not parallel (risk of removing the entire layer of polymerised resin).



Figure : C5CM093D

Apply the special glass finishing polish using a lint-free cloth.
Clean the laminated window.
Check that the surface of the glass is even as elsewhere on the laminated window.

REPAIR : SCRATCH ON GLASS

ESSENTIAL : Observe the safety and cleanliness recommendations .

1. Tooling

Glass scratch repair kit.

N.B. : Refer to the tools catalogue (Bodywork Family).

2. Windscreen repair area

CAUTION : Read the repair manual in full.

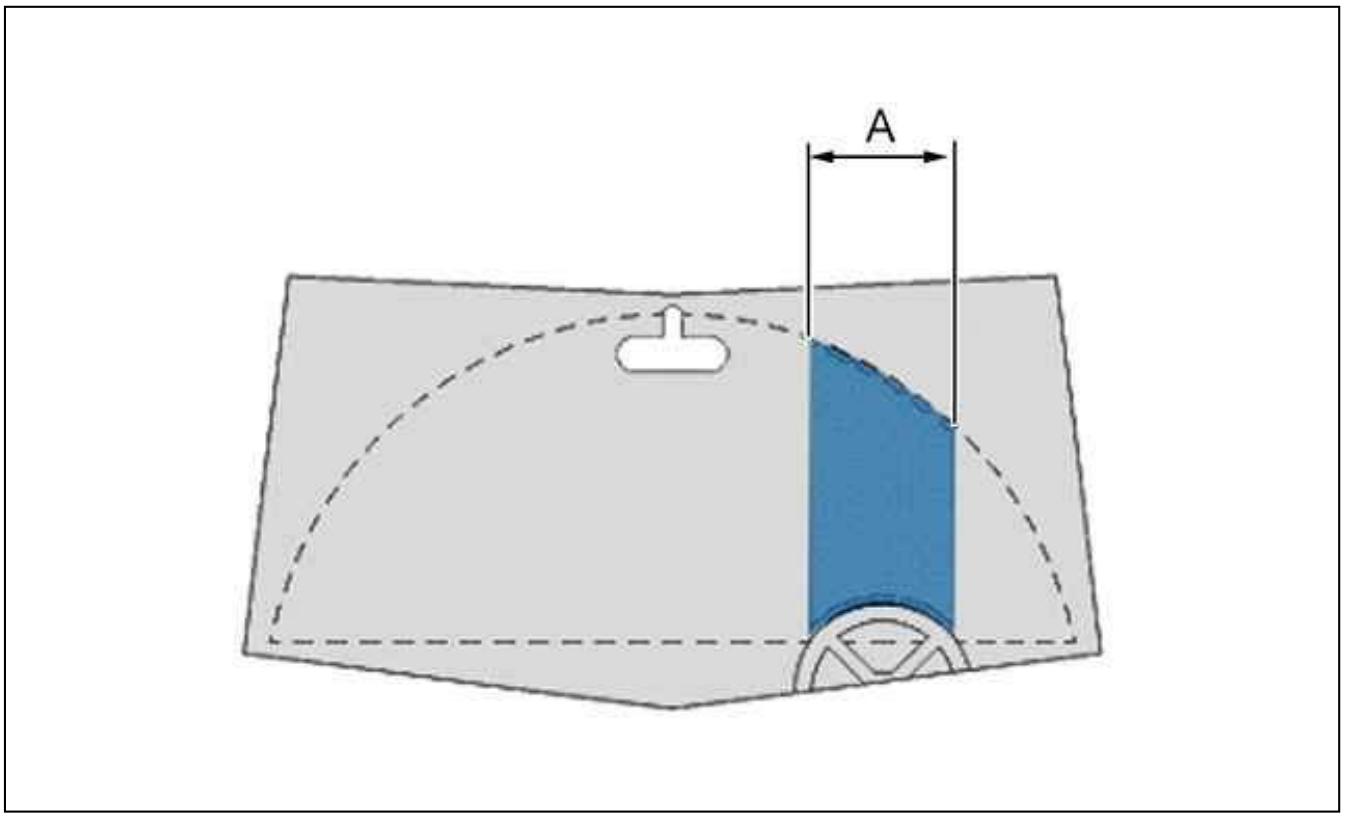

Figure : C5CM095D

"A" Zone of driver’s field of vision in which any repair is forbidden (220 mm).

N.B. : Any repair in the driver’s field of vision may constitute a hindrance of vision.

3. Precautions regarding use

N.B. : Always store the discs in individual plastic bags to avoid contamination. Excessive heat may break the glass.

ESSENTIAL : Keep the temperature of the glass under control to prevent it from breaking.

Mixing 5 litres of distilled water with the dose provided permits several repairs of optimum quality.
If the polisher bounces on the glass during the operation, increase the level of water and the angle of the polisher slightly.

ESSENTIAL : Use the polisher with extreme care (Splashes of water).

4. Scratch

CAUTION : A scratch which can be detected with a fingernail is considered deep and therefore irreparable.

Repairable scratches :

- Slight scratches
- Very slight scratches

ESSENTIAL : Follow the repair process using the discs is descending order, blue, orange and white.

5. Preparation



Figure : C5CM096D

Examine the scratch (at "a") to be repaired and determine its repair.

N.B. : To see the surface to be worked on more easily, mark the interior of the window using a black marker.

Clean the glass.

Protect the vehicle against slashes of water.

ESSENTIAL : Use distilled water.

Fill the water reservoir with the full dose provided for 5 litres of water.
Pump the coolant reservoir several times to pressurise it.
The pipe must be connected to the polisher.
Check that the red water flow valve is in the closed position.



Figure : C5CM097D

5.1. Polishing

CAUTION : Too little water may result in an increase in the temperature of the polishing disc and shorten its service life; too much water slows down the polishing process.

Turn the valve anticlockwise until a few drops of water begin to flow from the centre of the polishing head.

ESSENTIAL : Follow the repair process using the discs is descending order, blue, orange and white.

Hold the polisher flat and keep it above the surface to be polished.
Eliminate the scratch (at "a") ; Using the polisher.
Polish the area (at "b").
Clean the glass ; Using a scraper.
Visually check the progress of the repair.
After a few minutes of polishing, the scratch begins to disappear.
Continue polishing until the scratch has disappeared completely.

5.2. Final polishing

There are 2 options for the final polishing stage.

1 option :

- Use the white disc ; Using the polisher
- Increase the flow and quantity of water
- Hold the polisher flat and keep it above the surface to be repaired
- Polish the area (at "b")
- If the polisher begins to bounce, increase the flow of water
- Continue the final polish, until a satisfactory result is achieved

2 option :

- Use the foam disc ; Using the polisher
- Apply the polishing fluid or powder to the foam disc
- Add a few drops of water to the foam
- Hold the polisher flat and keep it above the surface to be repaired
- Polish the area (at "b")
- Continue the final polish, until a satisfactory result is achieved
- If cloudy marks remain after polishing, Use option 1 to achieve a satisfactory result

REMOVING - REFITTING : SUN VISOR MODULE

1. Recommended tools

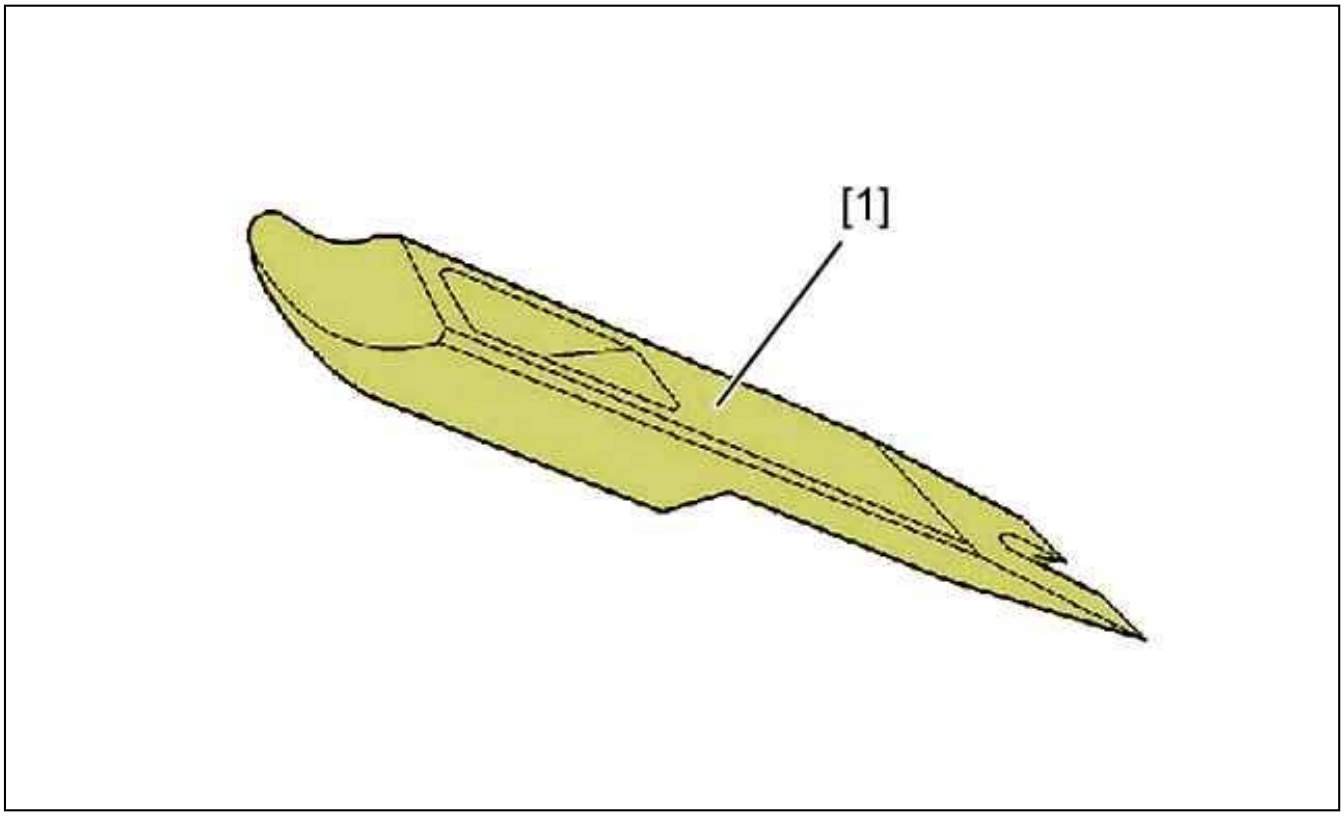

Figure : E5AP2THD

Reference	Designation	Reference
[1]	Unclipping lever	(-).1330-E
	Tool for removing side mouldings	8205-T.E

2. Removing

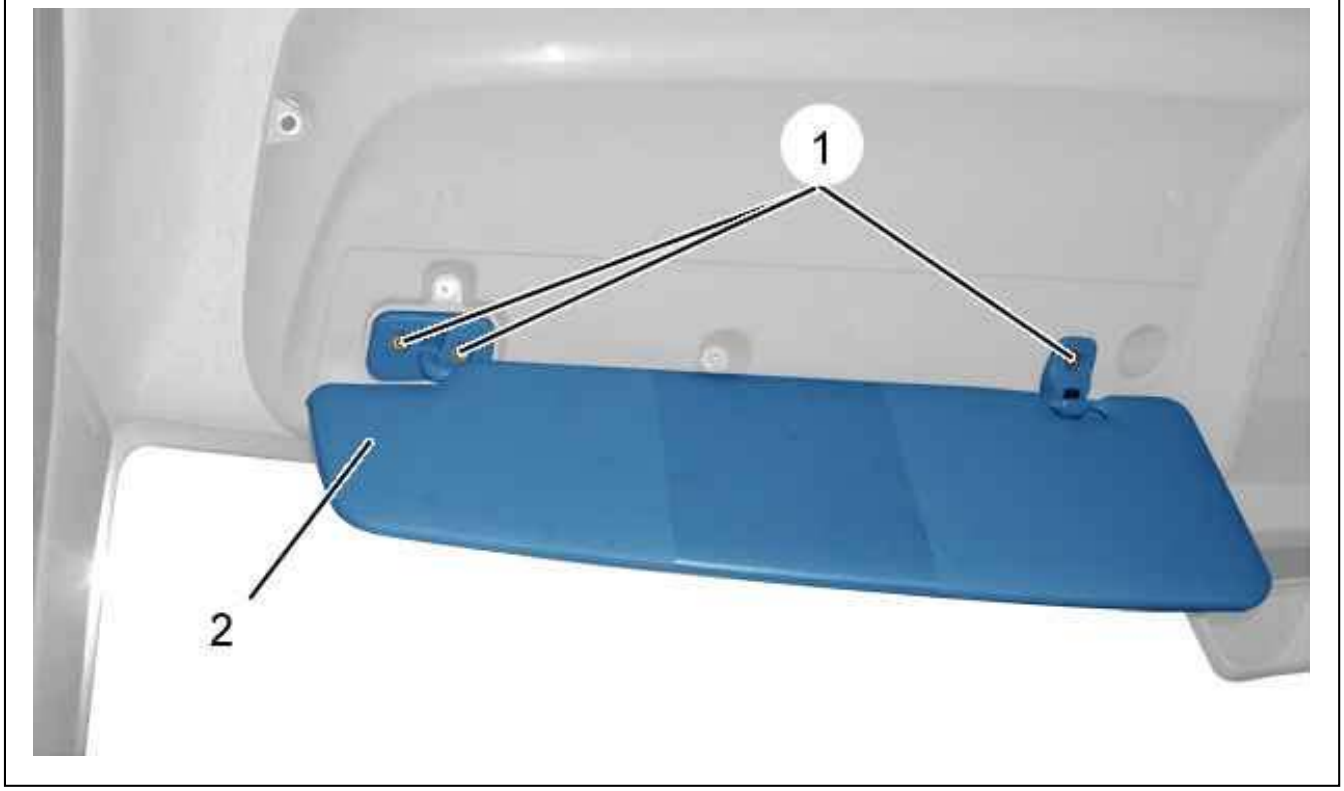

Figure : C5GP0MFD

Remove (driver's side) :

- The sun visor screws (1)
- The sun visor (2)

Proceed in the same way for the other side.

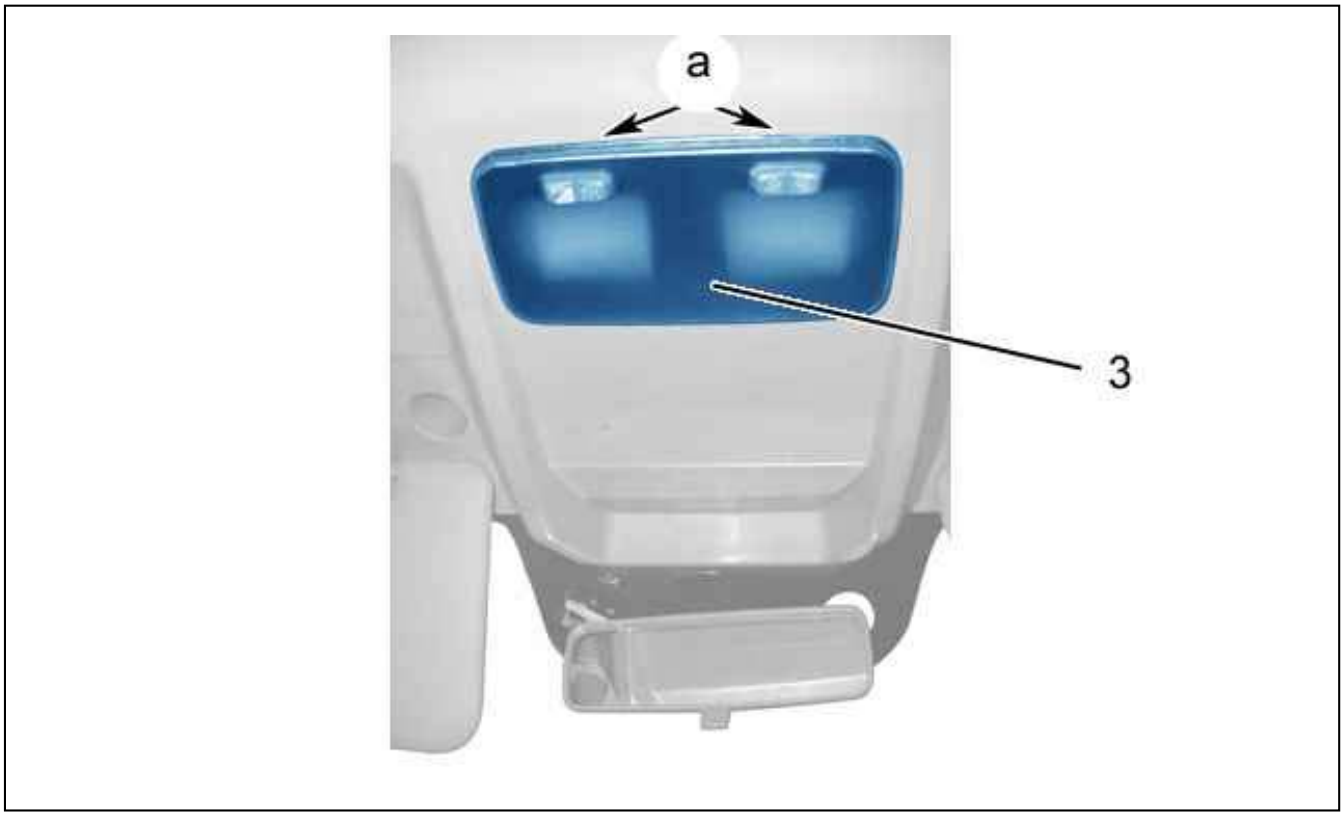

Figure : C5GP0MGD

Detach the interior lighting (3) (at "a") ; Using tool [1].
Disengage the interior lamp (3) (partly).

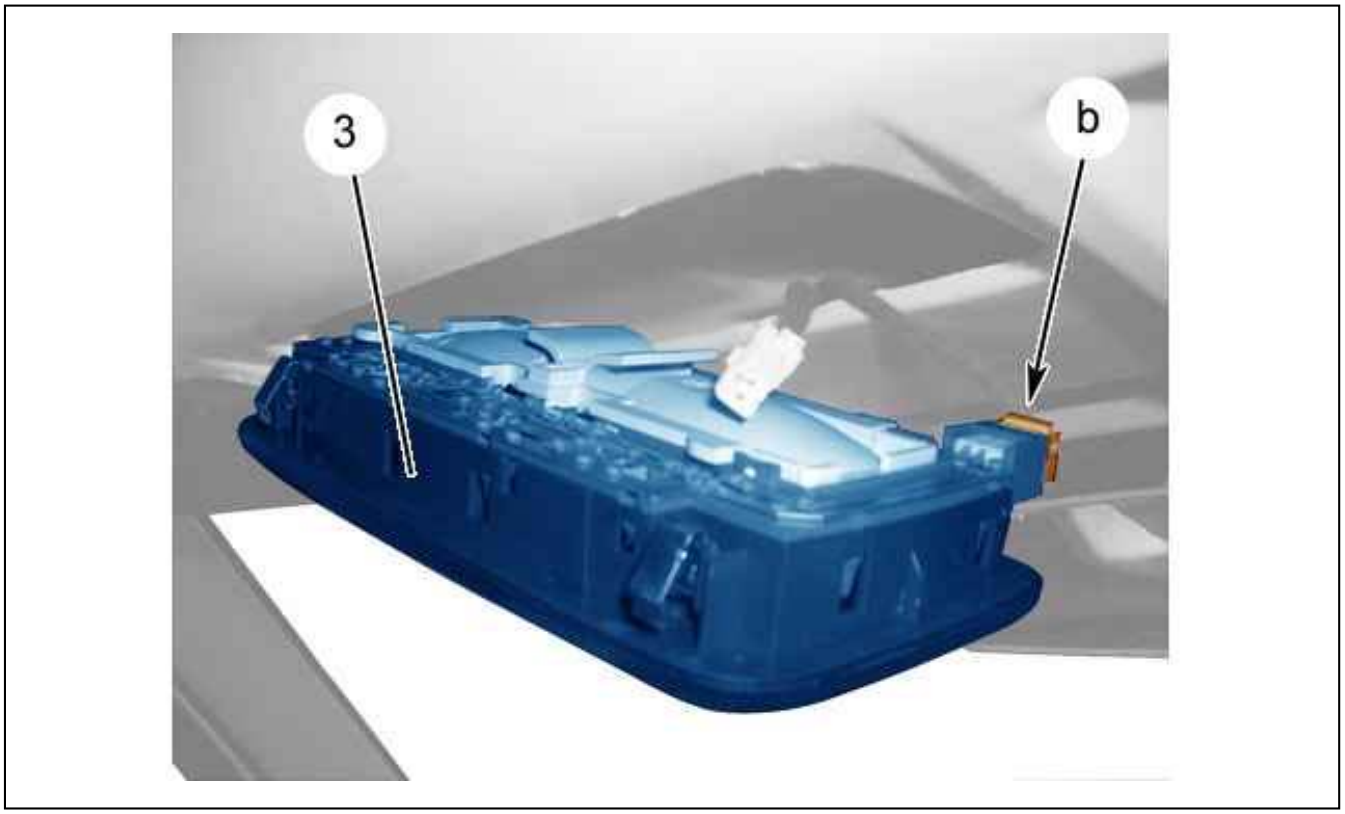

Figure : C5GP0MHD

Disconnect the connector as "b".
Remove the interior lamp (3).

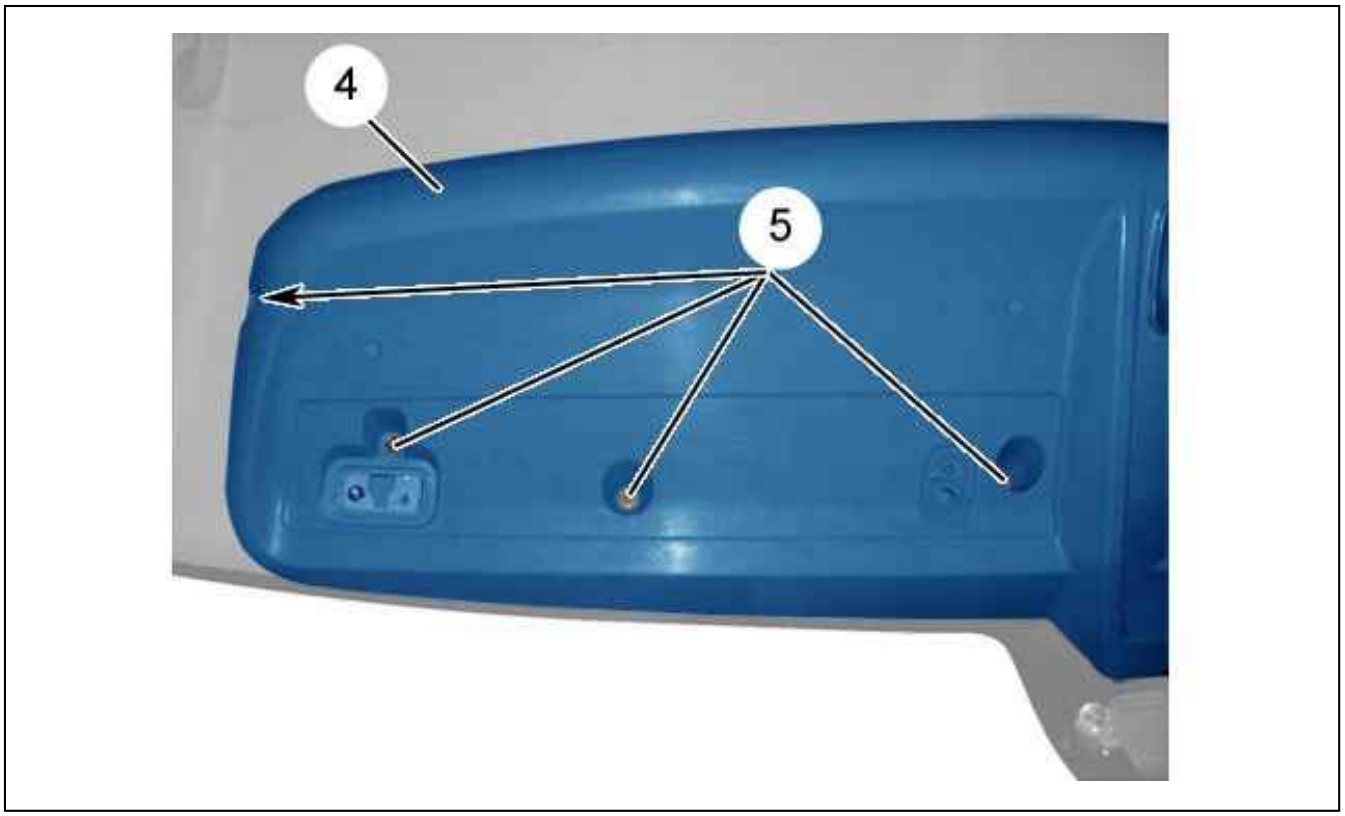

Figure : C5GP0MJD

Remove the bolts (5) (driver’s side).
Proceed in the same way for the other side.
Remove the sun visor module (4).

3. Refitting

Proceed in the reverse order to removal.
Check all the equipment works.

REMOVING - REFITTING : HEADLINING

1. Recommended tools

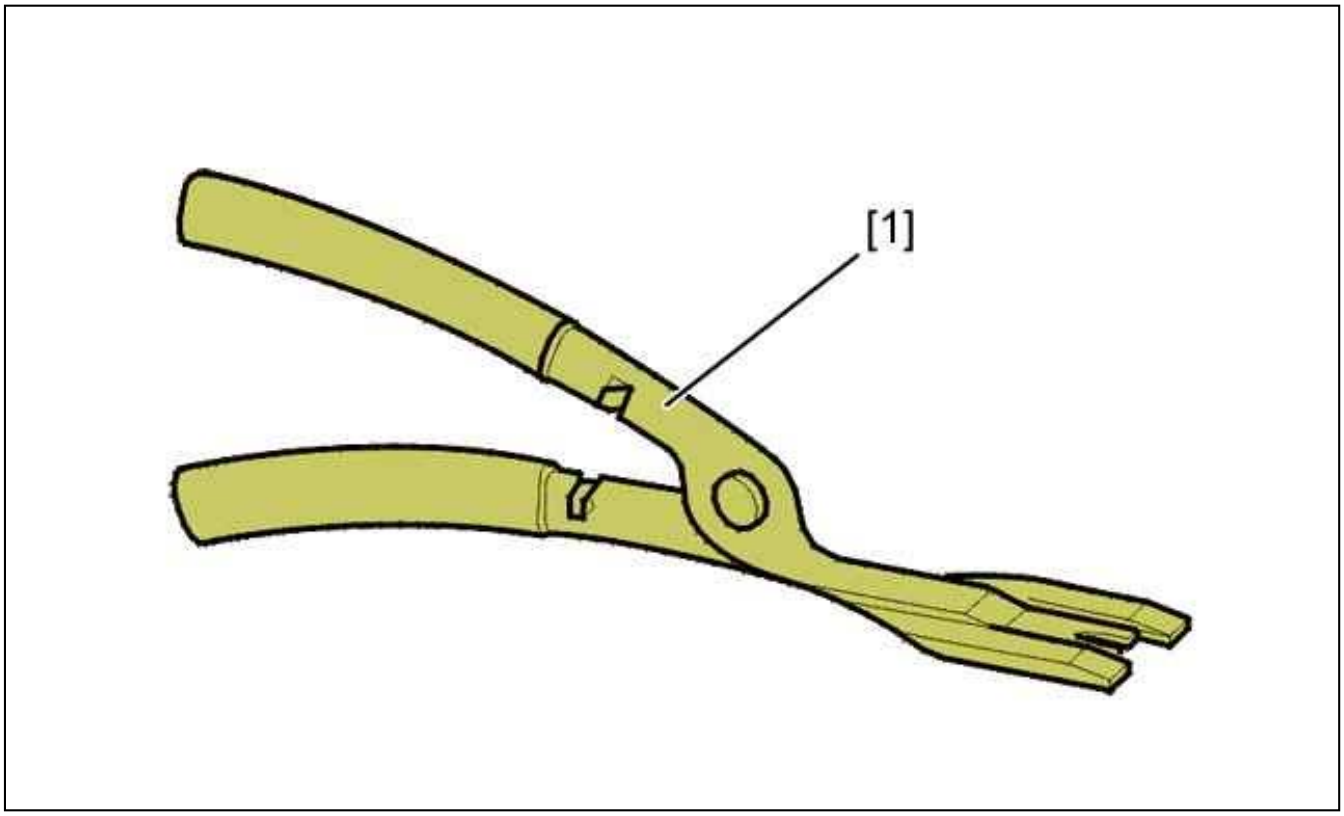

Figure : E5AP2TJD

[1] Trim pliers (-).1311.

2. Removing

2.1. Headlining

Remove :

- The sun visor module (see the relevant operation)
- The roof rear trim (see the relevant operation)
- The windscreen pillar trim (partly) (see the relevant operation)
- The front door seals (partly)

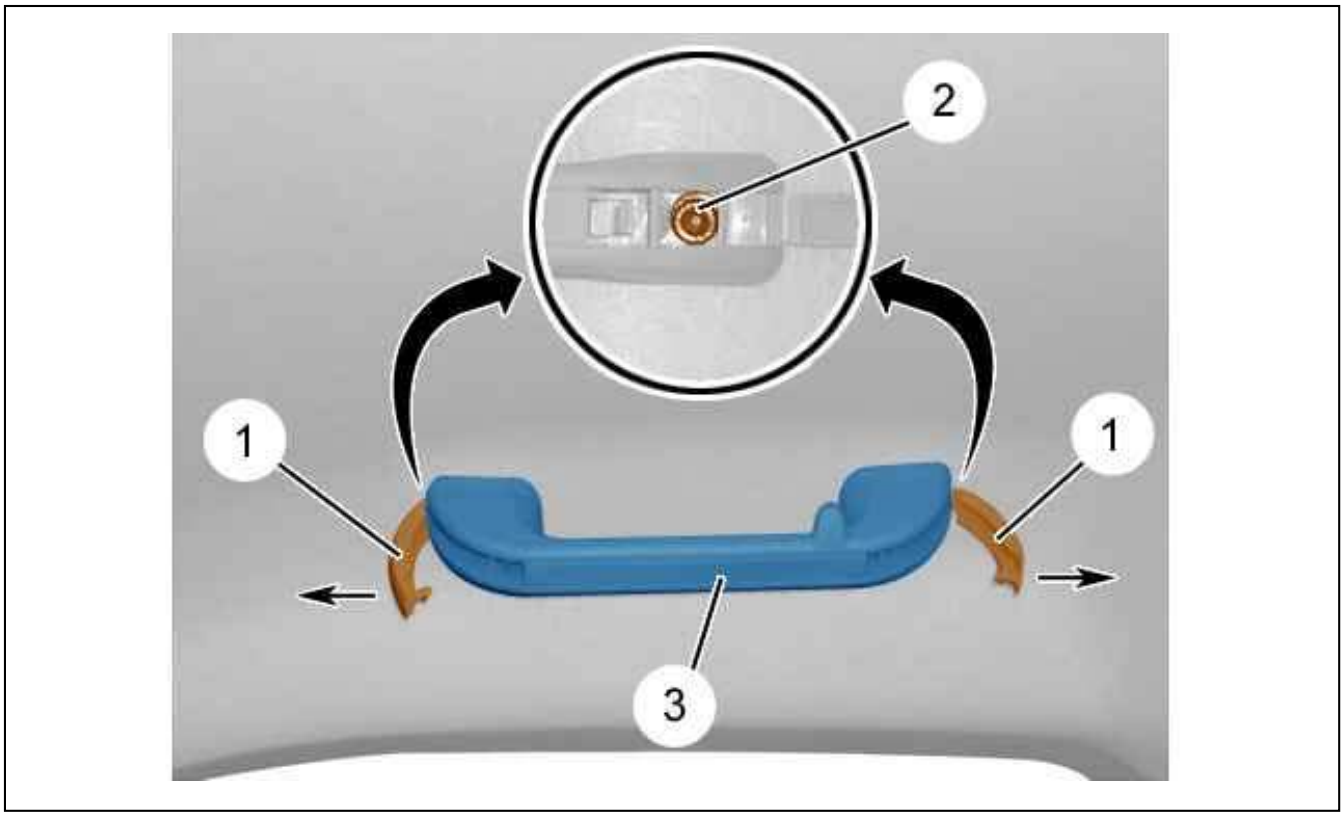

Figure : C5GP0MKD

Unclip screw cover tabs (1) from the grab handle.
Remove :

- The bolts (2)
- The grab handle (3)

Proceed in the same way for the other side.

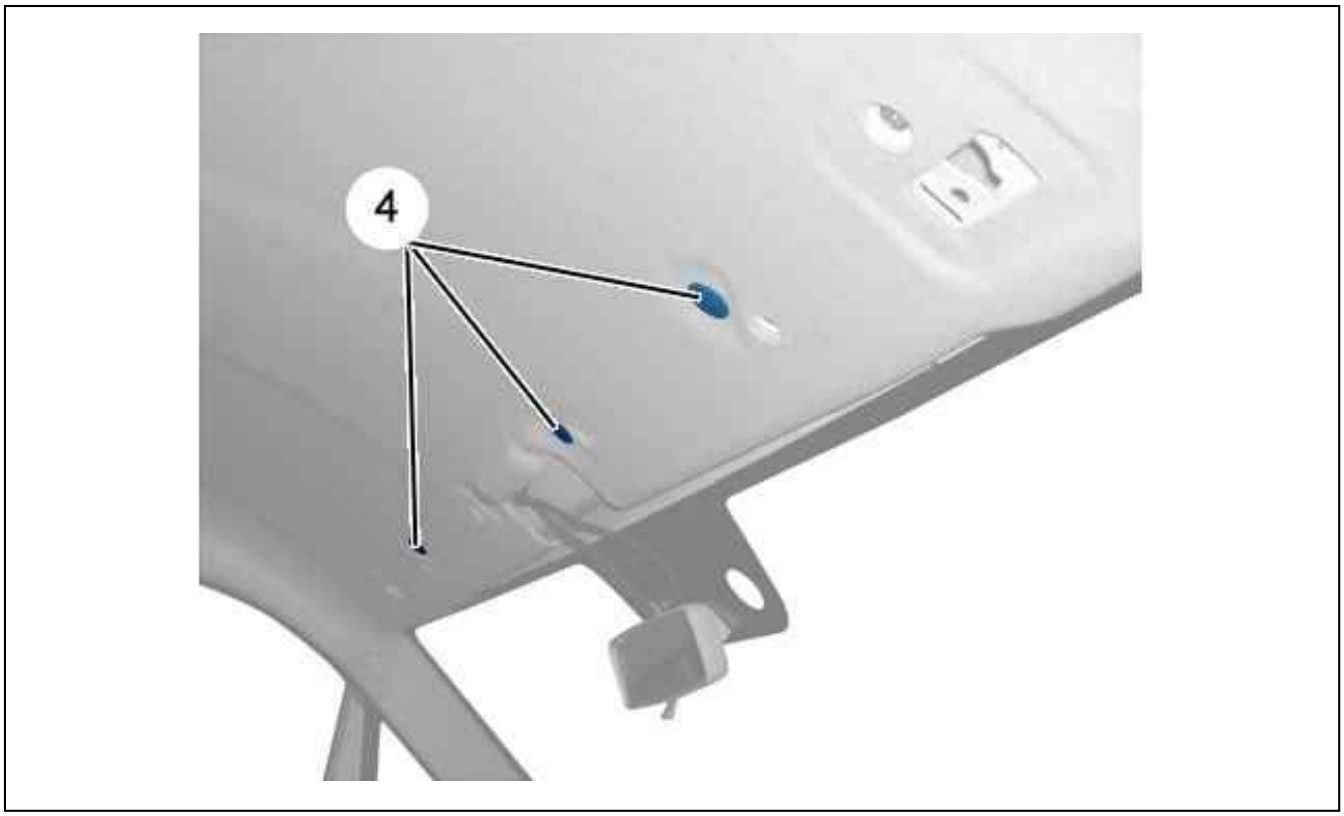

Figure : C5GP0MLD

Unclip the clips (4) ; Using tool [1].

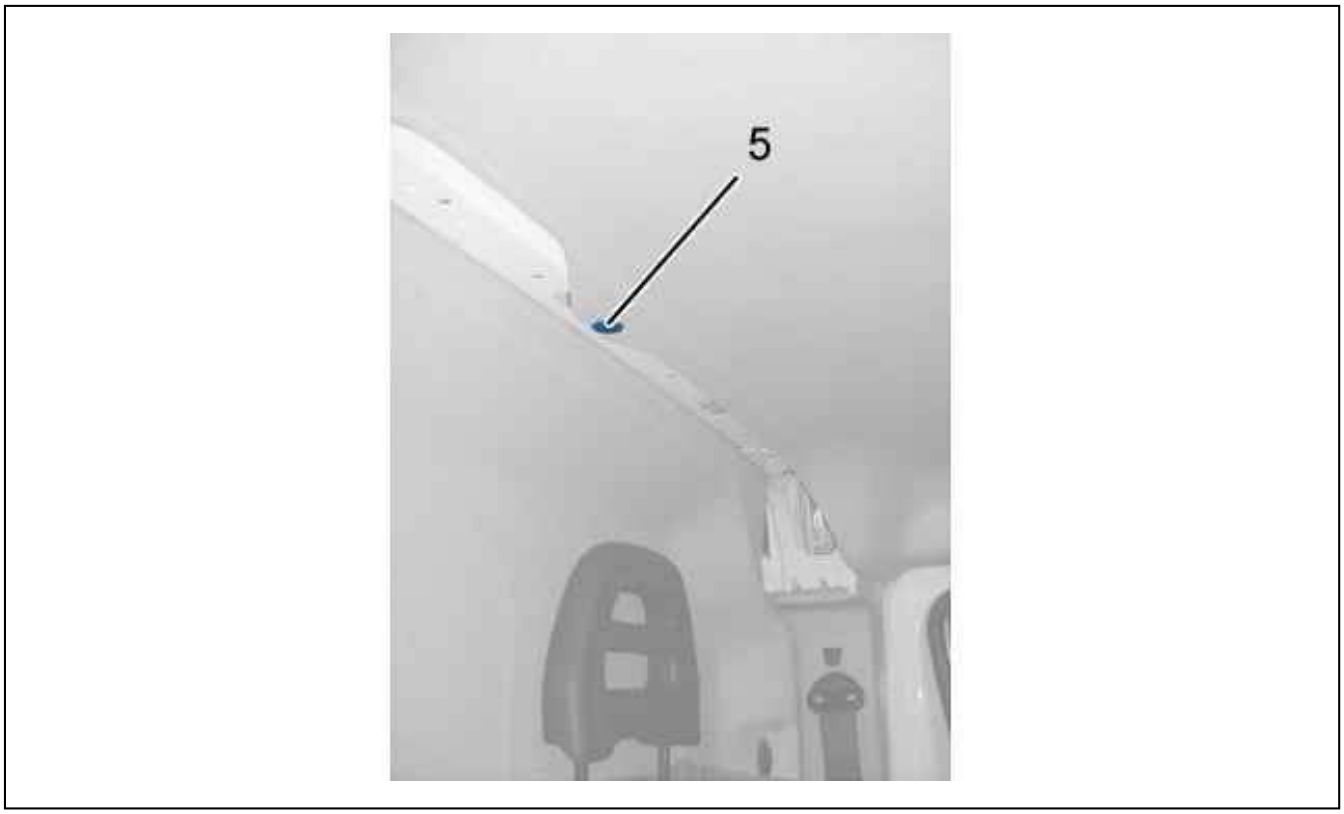

Figure : C5GP0MMD

Unclip the clip (5) ; Using tool [1].
Remove the headlining .

2.2. Shelf above windscreen

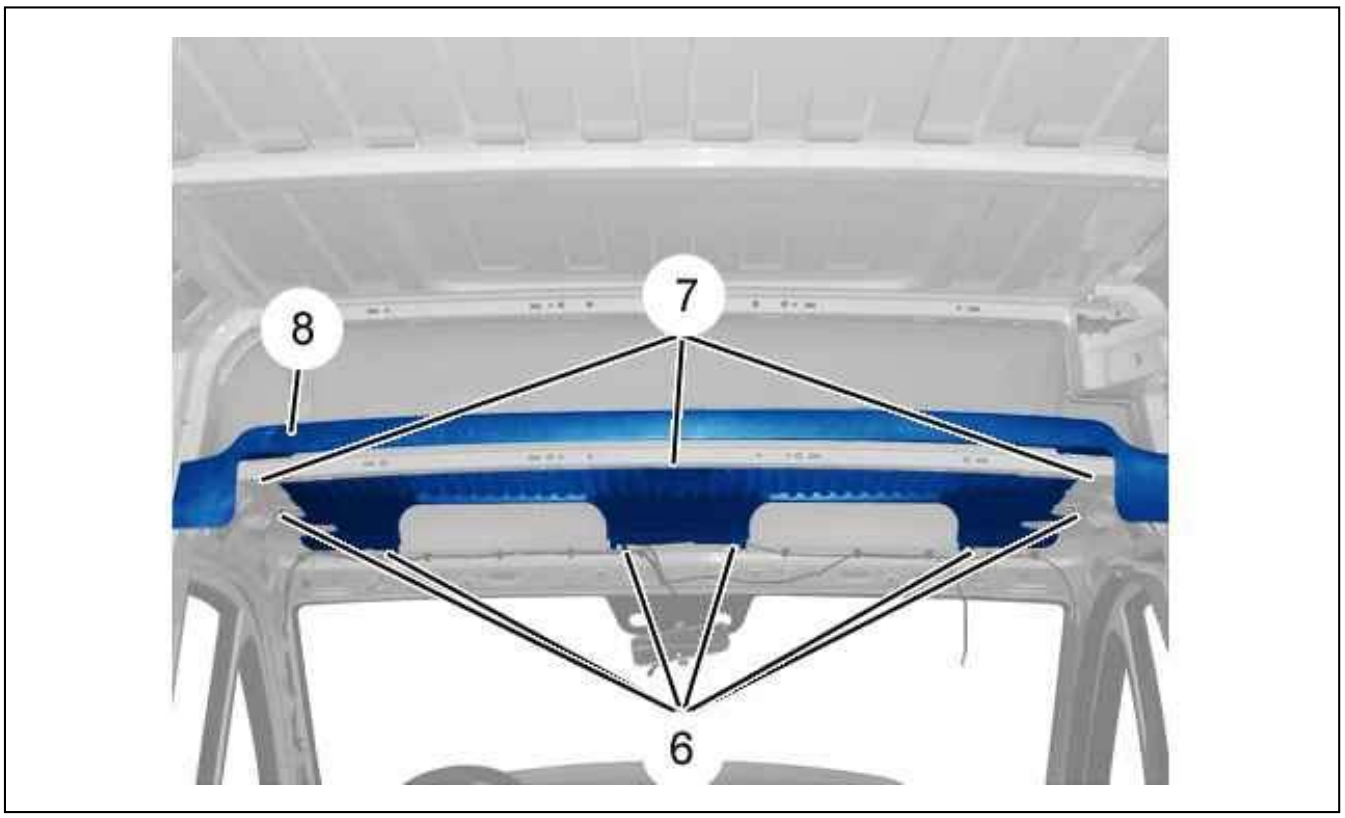

Figure : C5GP0MND

Remove :

- The screws (6) and (7)
- The hood (8)

3. Refitting

Proceed in the reverse order to removal.

REMOVING - REFITTING : HEADLINING

ESSENTIAL : Observe the safety and cleanliness recommendations.

1. Recommended tools

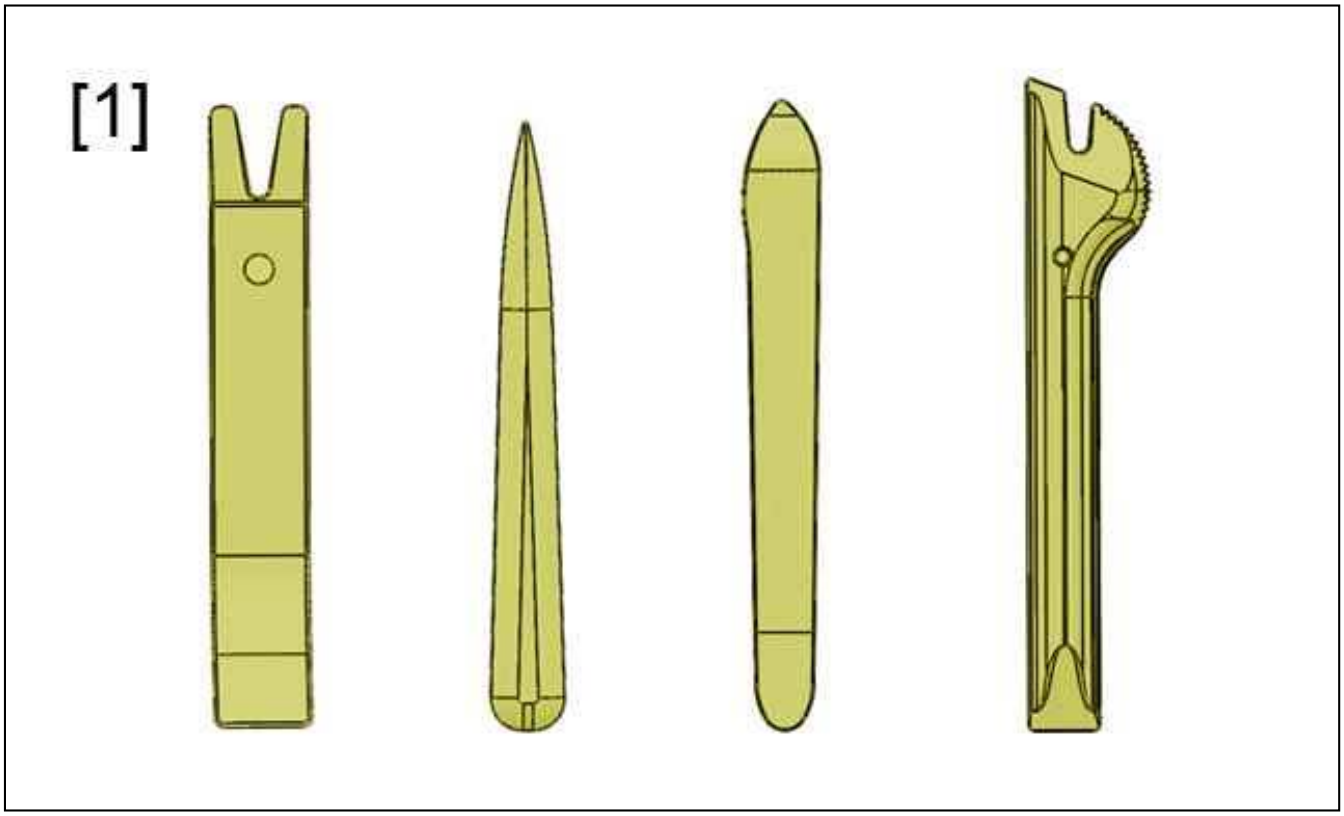

Figure : E5AP30WD

[1] Stripping tools (-).1350-ZZ.

2. Preliminary operations

Perform the following operations :

- Switch off the ignition
- Wait 3 minutes before disconnecting the battery
- Disconnect the battery

Remove :

- The C post upper trims (left and right)
- The left-hand panel window right-hand trim
- The storage compartments
- The courtesy lights
- The rear air blower trim
- The sliding side door aperture seal
- The rear doors aperture seal

3. Removing

3.1. Headlining (left side)

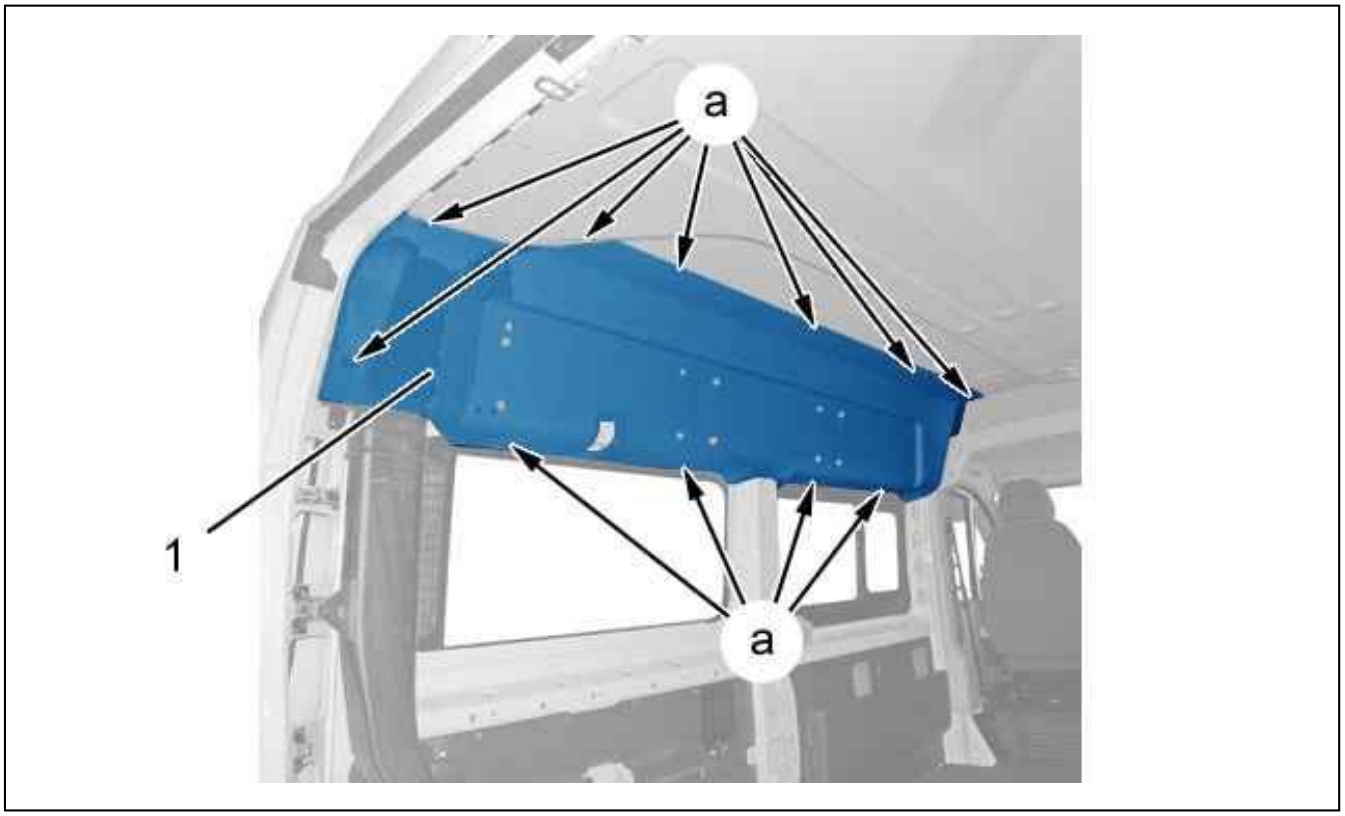

Figure : C5GM0DCD

Unclip the clips (at "a") ; Using tool [1].
Remove : The headlining (1).

3.2. Headlining (right hand side)

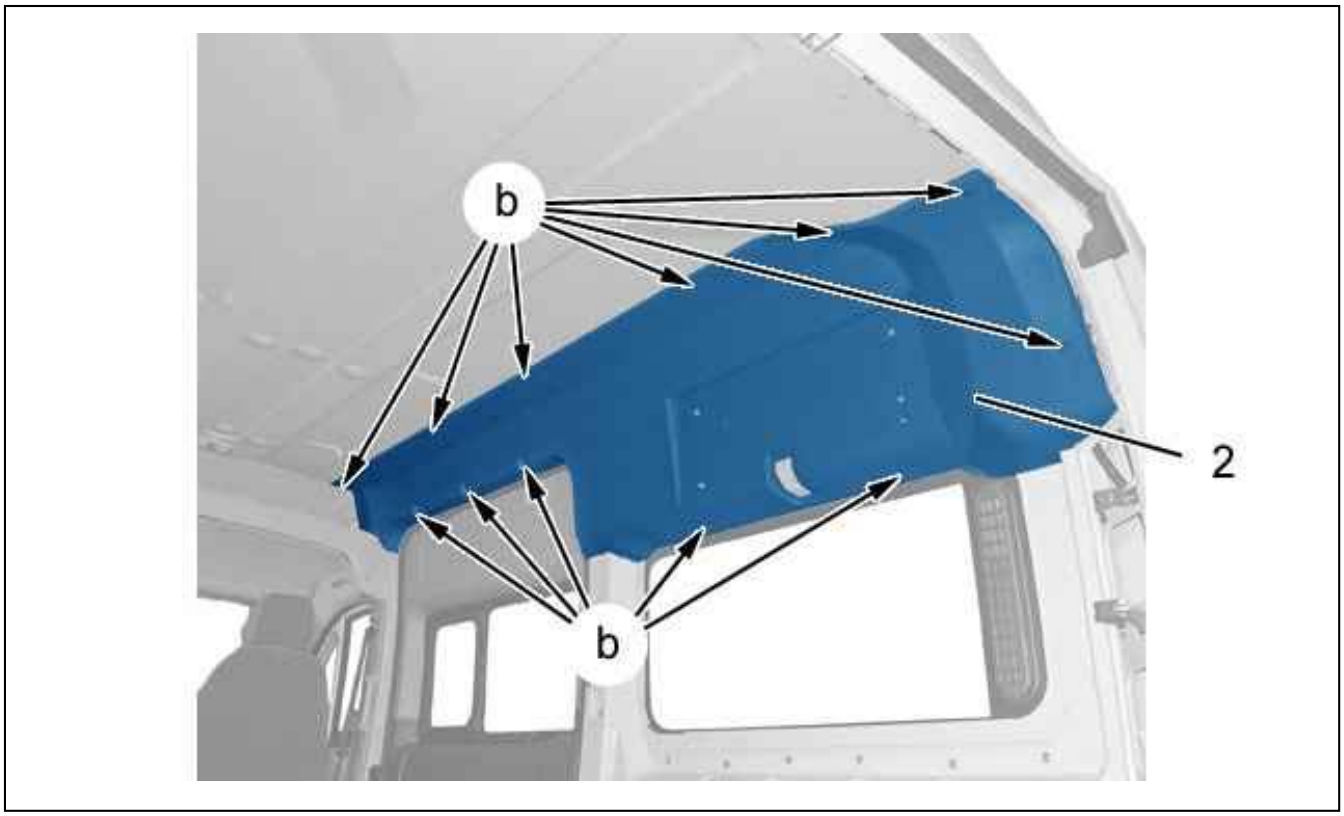

Figure : C5GM0DDD

Unclip the clips (at "b") ; Using tool [1].
Remove : The headlining (2).

3.3. Headlining

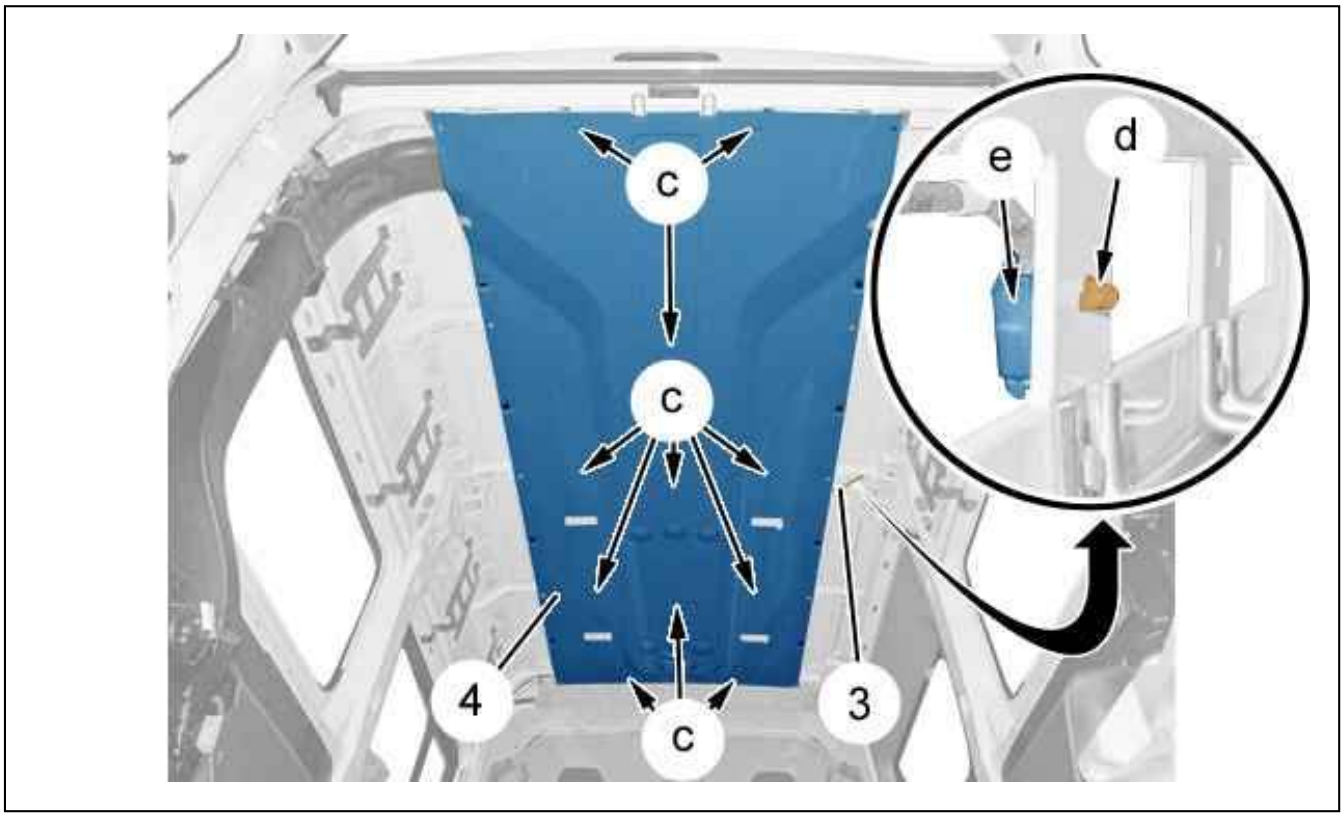

Figure : C5GM0DED

Unclip :

- The clips (at "c") ; Using tool [1]
- The connector (at "d")

Disconnect the connector (at "e").
Release the harness (3).
Remove : The headlining (4).

3.4. Central headlining supports

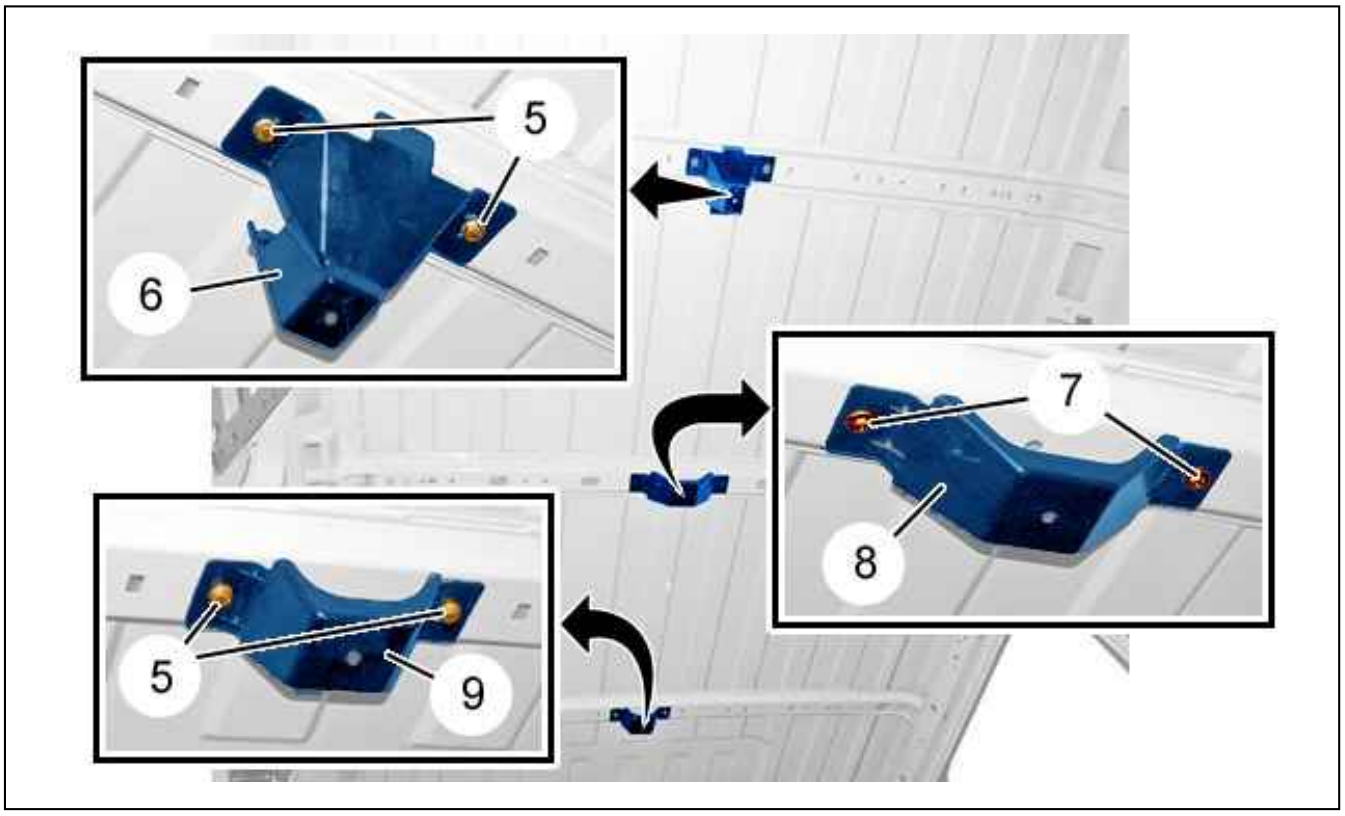

Figure : C4DM068D

Remove :

- The bolts (5), (7)
- The central headlining supports (6), (8), (9)

3.5. Electrical harness

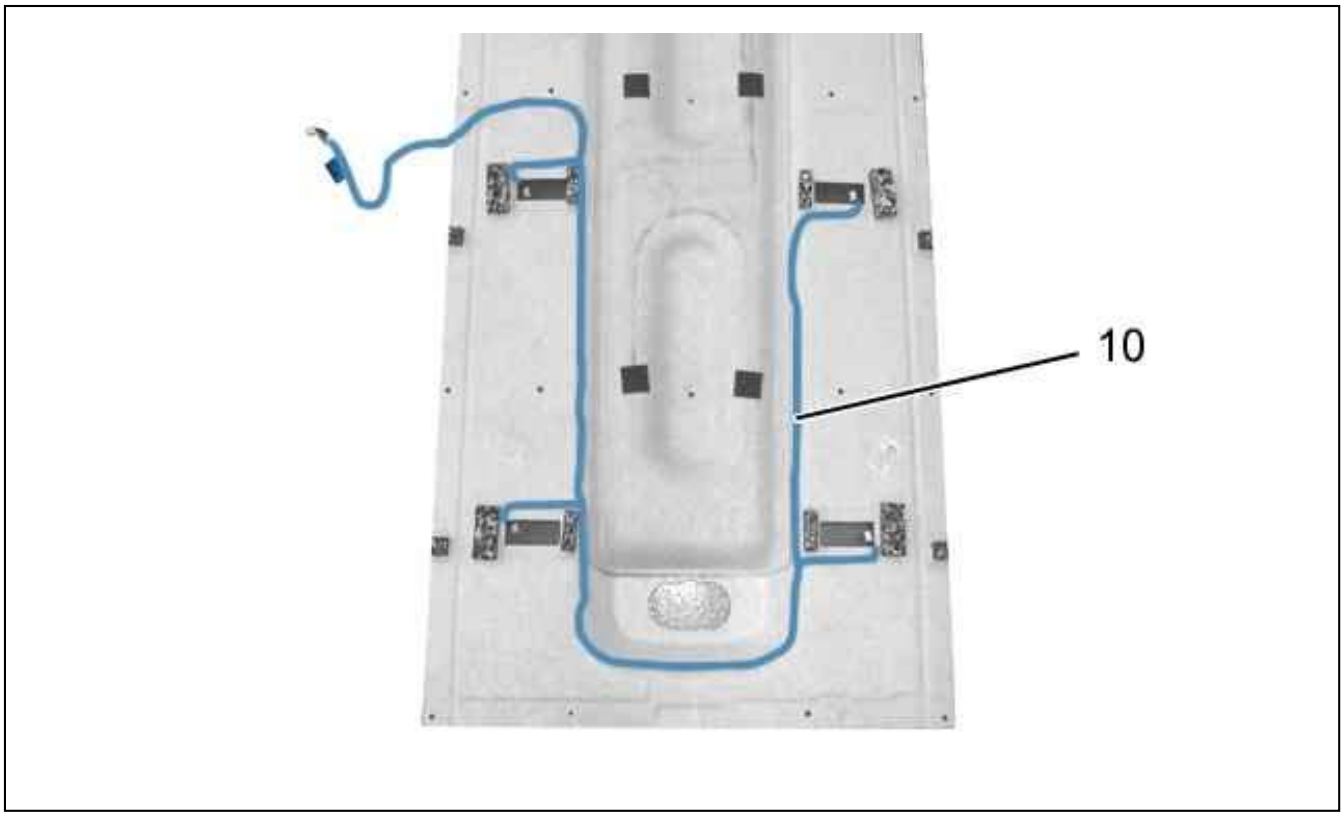

Figure : D3AM003D

N.B. : Locate the routing of the electrical harness .

Detach - Remove : The harness (10).

3.6. Central headlining vents

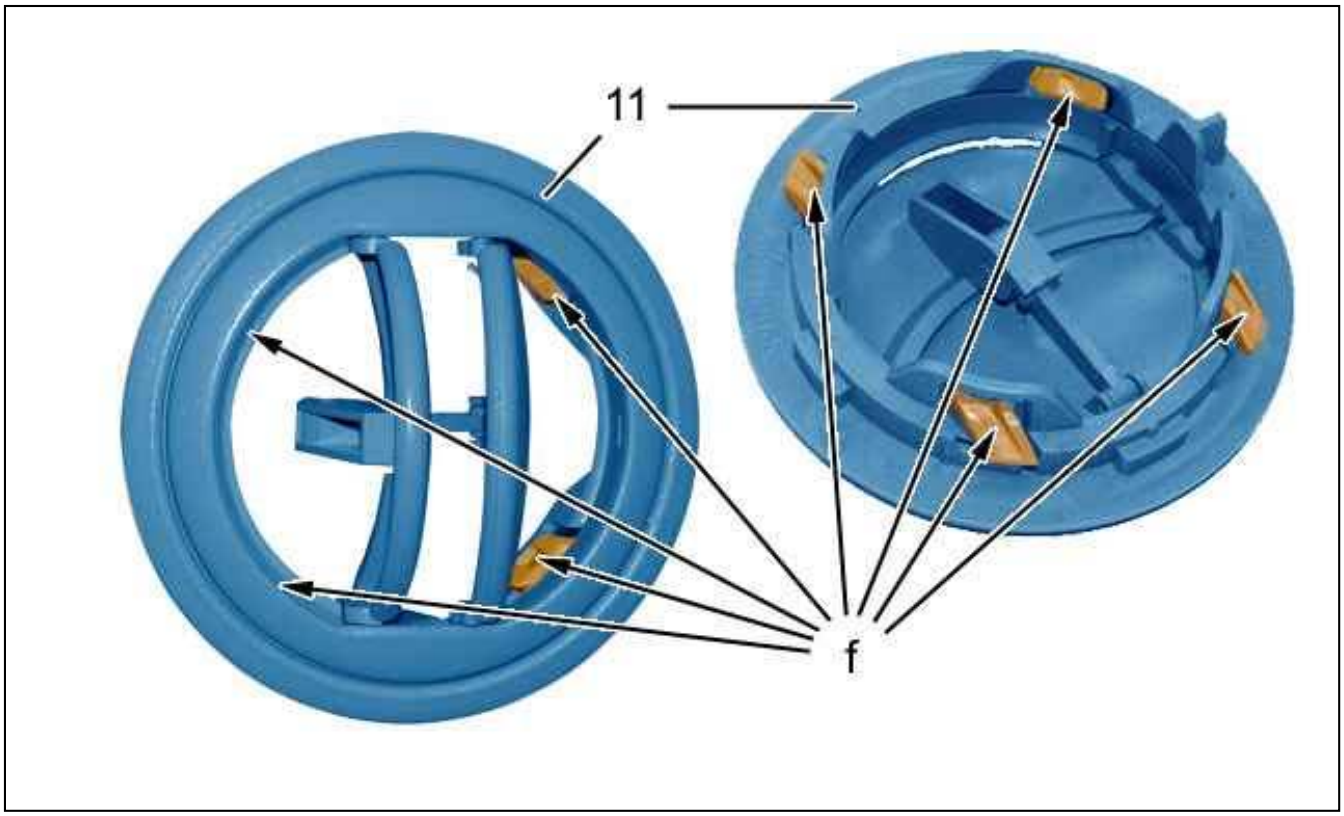

Figure : C5DM031D

Unclip : The vents (11) (at "f").
Remove : The vents (11).

4. Refitting

Proceed in the reverse order to removal.
Tighten the bolts (5), (7) to 2 ± 0,1 daN.m.
Check that the electrical equipment is working correctly.

REMOVING - REFITTING : GLOVEBOX

ESSENTIAL : Observe the safety and cleanliness recommendations.

1. Removing

1.1. Glovebox

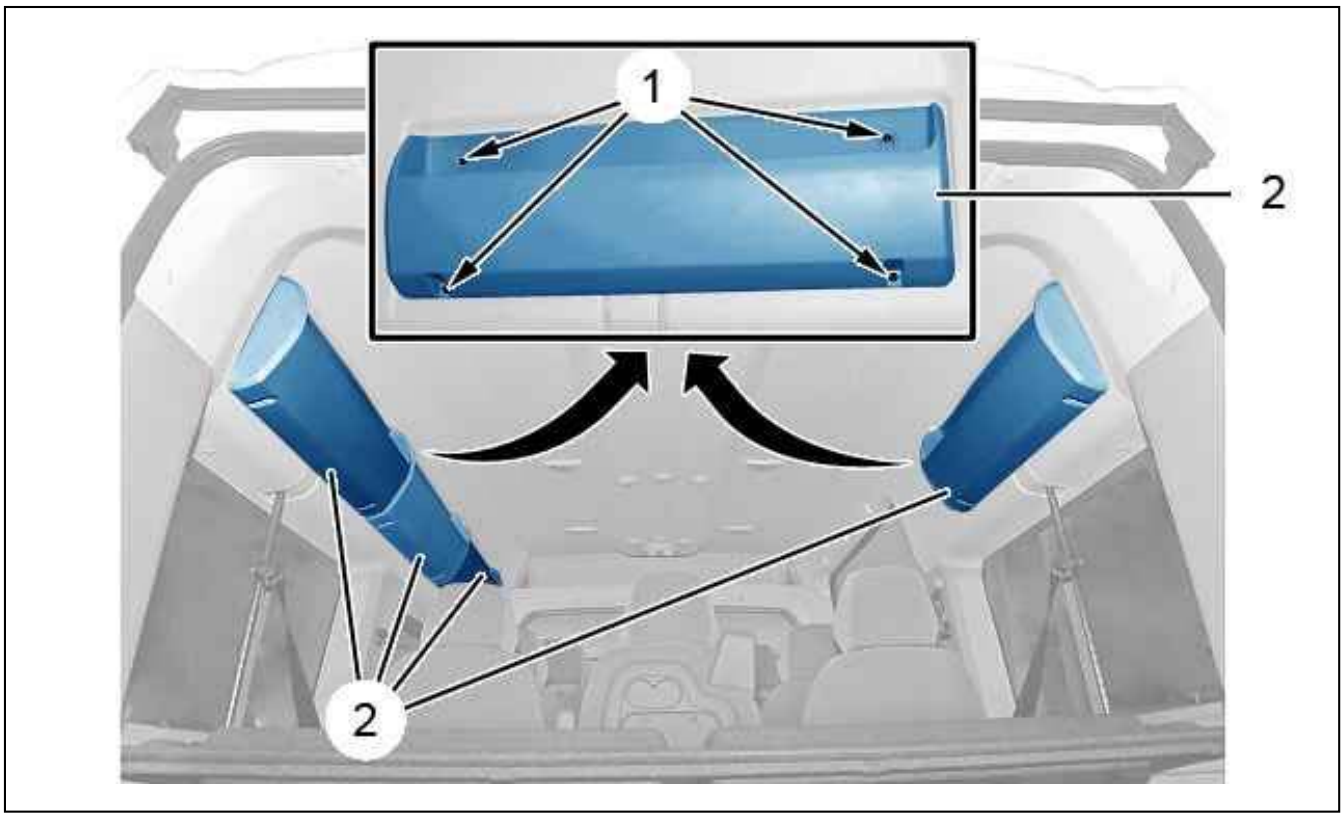

Figure : C5GM0B2D

Remove :

- bolts (1)
- Glovebox (2)

1.2. support (Glovebox)

Remove : The left-hand and right-hand headlining .

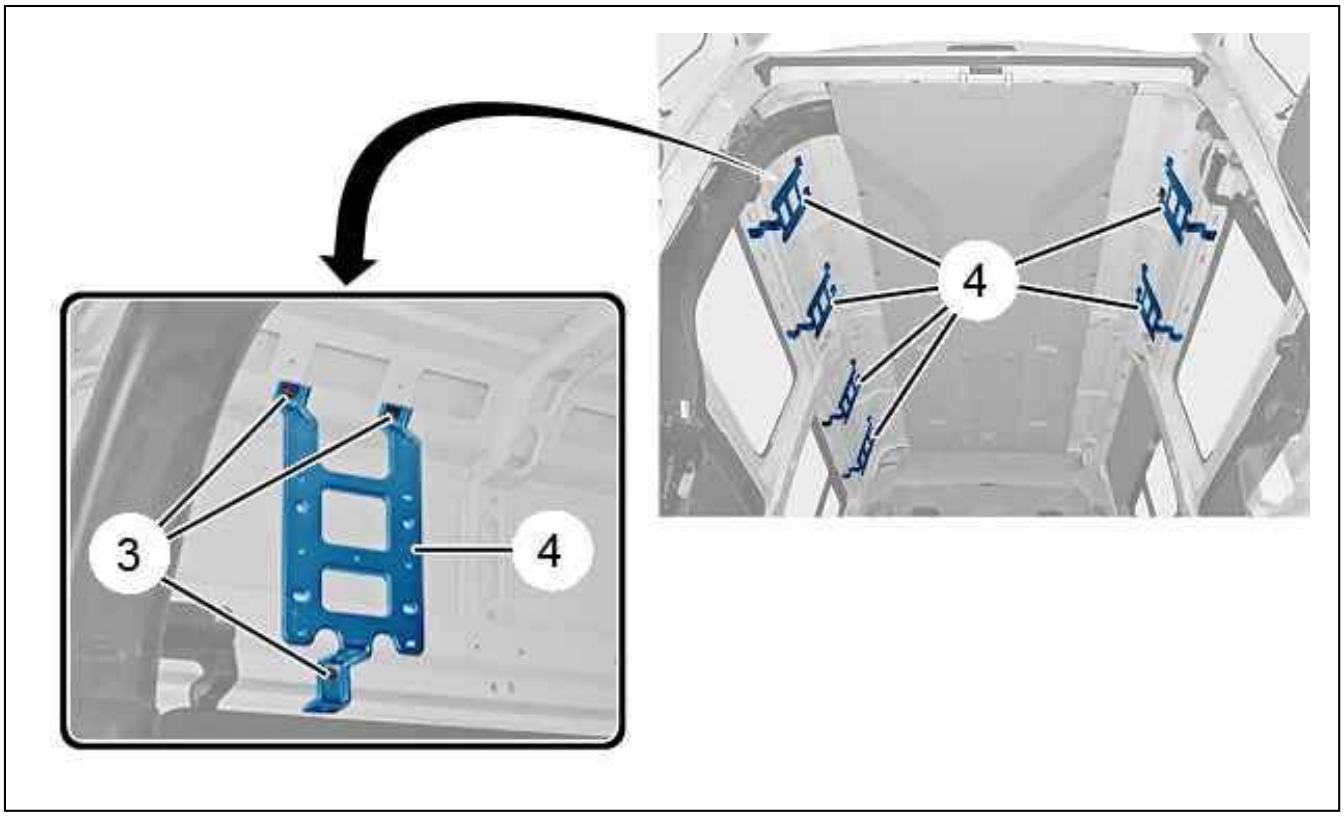

Figure : C5GM0B3D

Remove :

- The bolts (3)
- The brackets (4) (Glovebox)

2. Refitting

Proceed in the reverse order to removal.
Tighten the bolts (3) to 2 ± 0,1 daN.m.
Check all the equipment works.

REMOVING - REFITTING : FALSE FLOOR

ESSENTIAL : Observe the safety and cleanliness recommendations.

1. Recommended tools

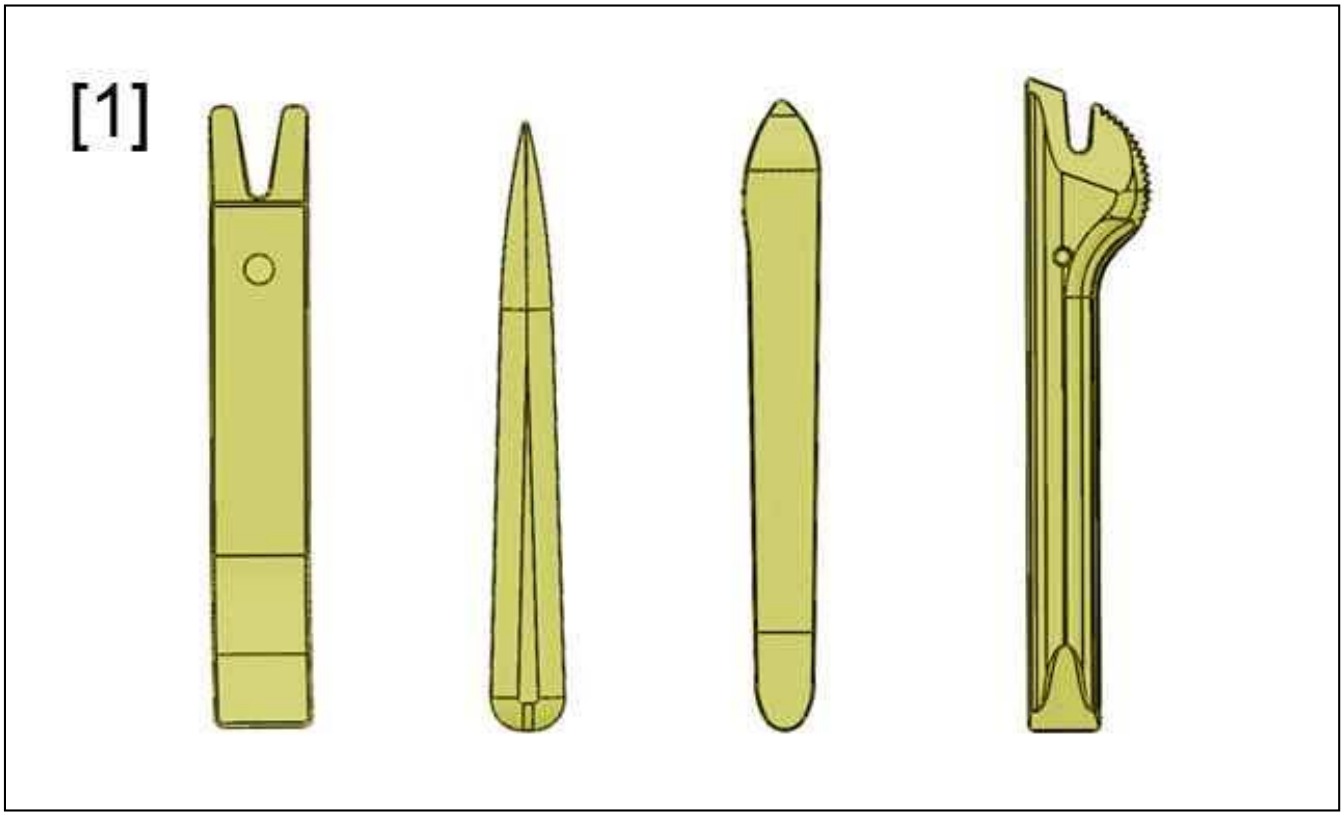

Figure : E5AP30WD

[1] Stripping tools (-).1350-ZZ.

2. Removing

Remove :

- The sill trim of the sliding side door
- The rear wheel trims
- The central trim (Rear)
- The ventilation grilles

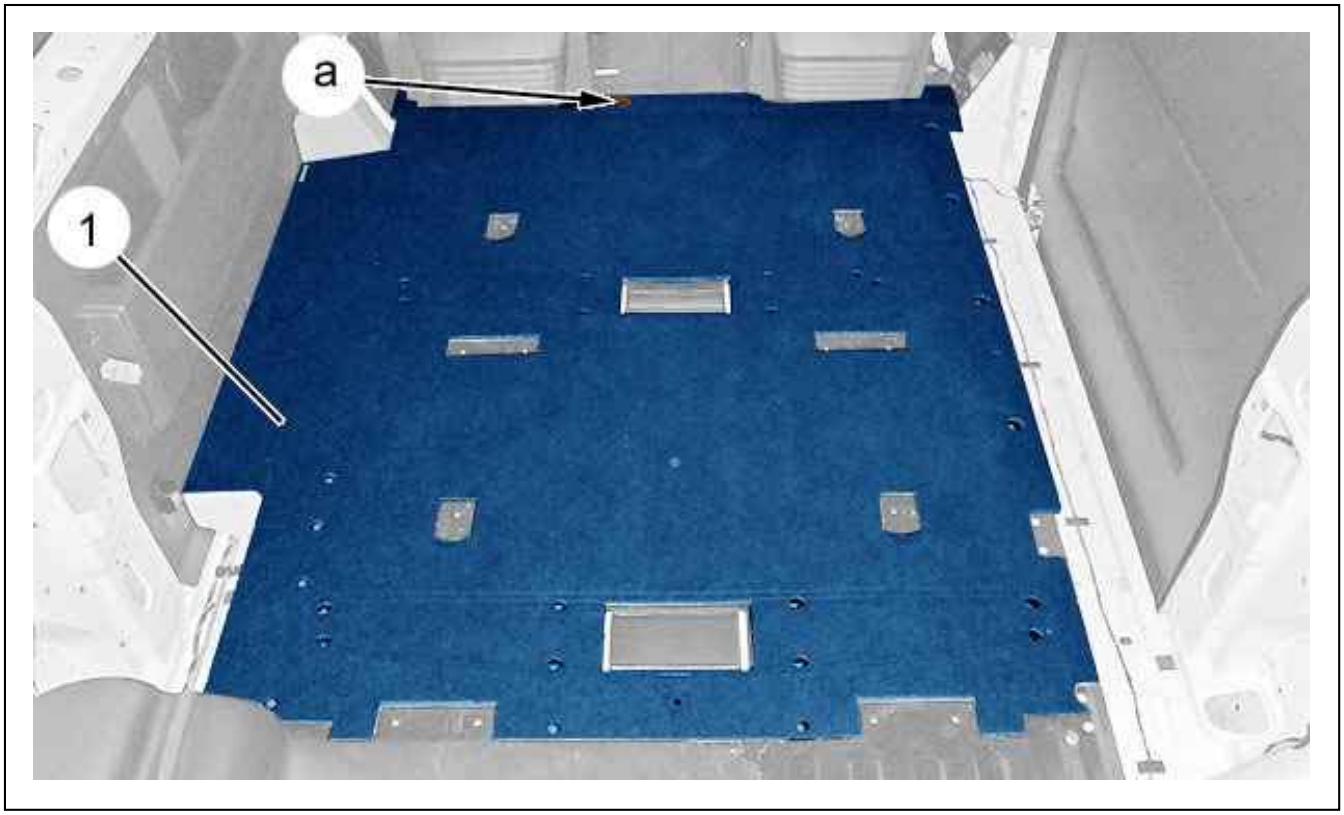

Figure : C4BM0EKD

Unclip the clip (at "a") ; Using tool [1].
Remove : The floor carpet (1).

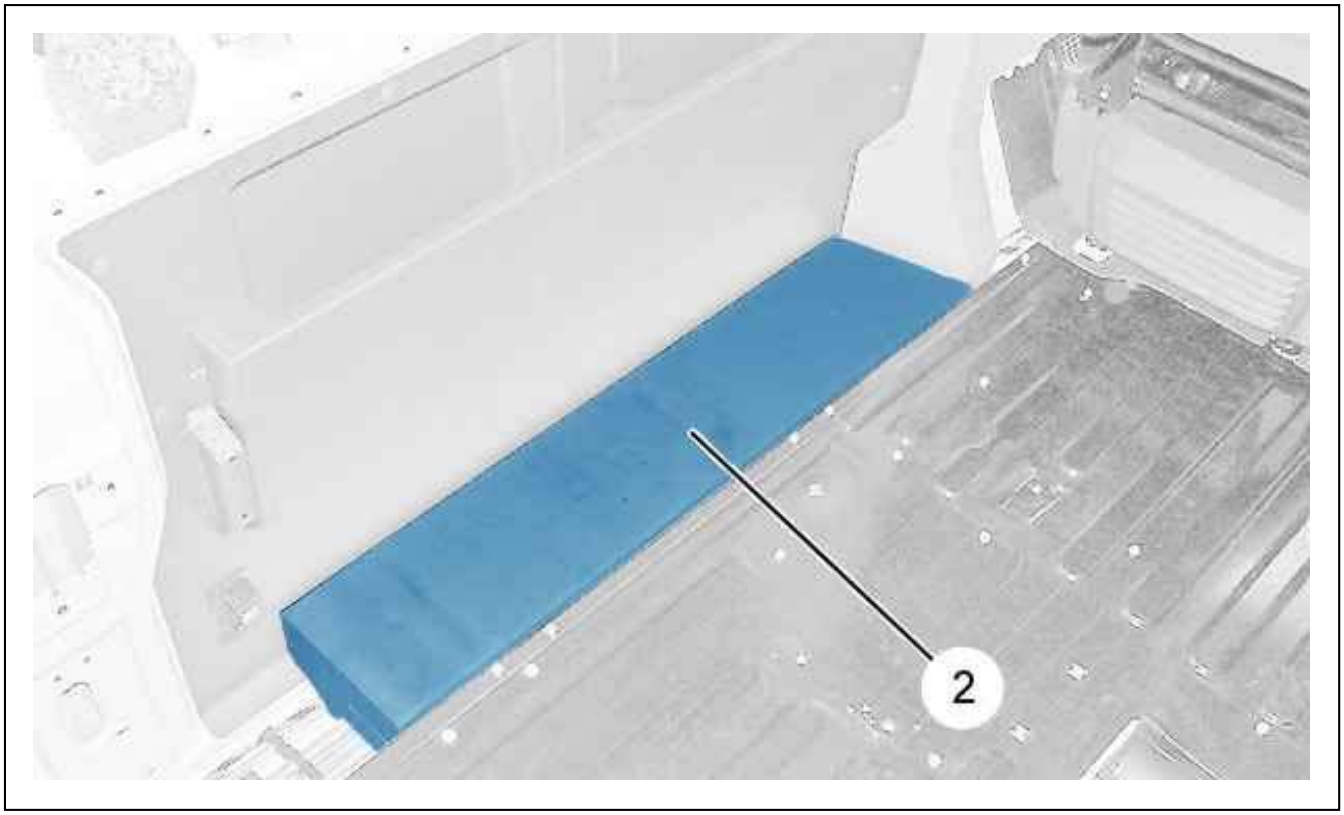

Figure : C4BM0ELD

Remove the sound-deadening (2).

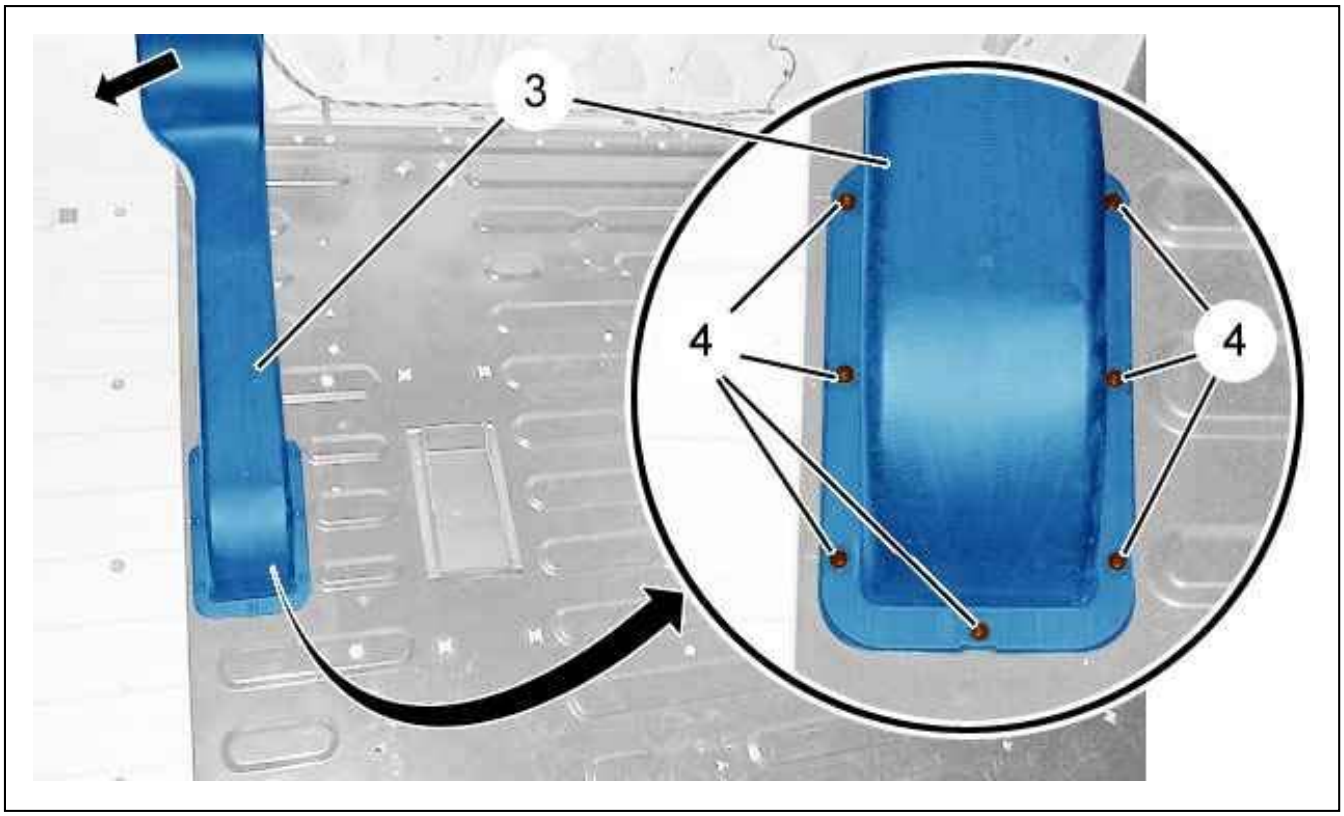

Figure : C4BM0EMD

Remove the bolts (4).
Detach : The air duct (3) (following the arrow).
Remove the air conduit (3).

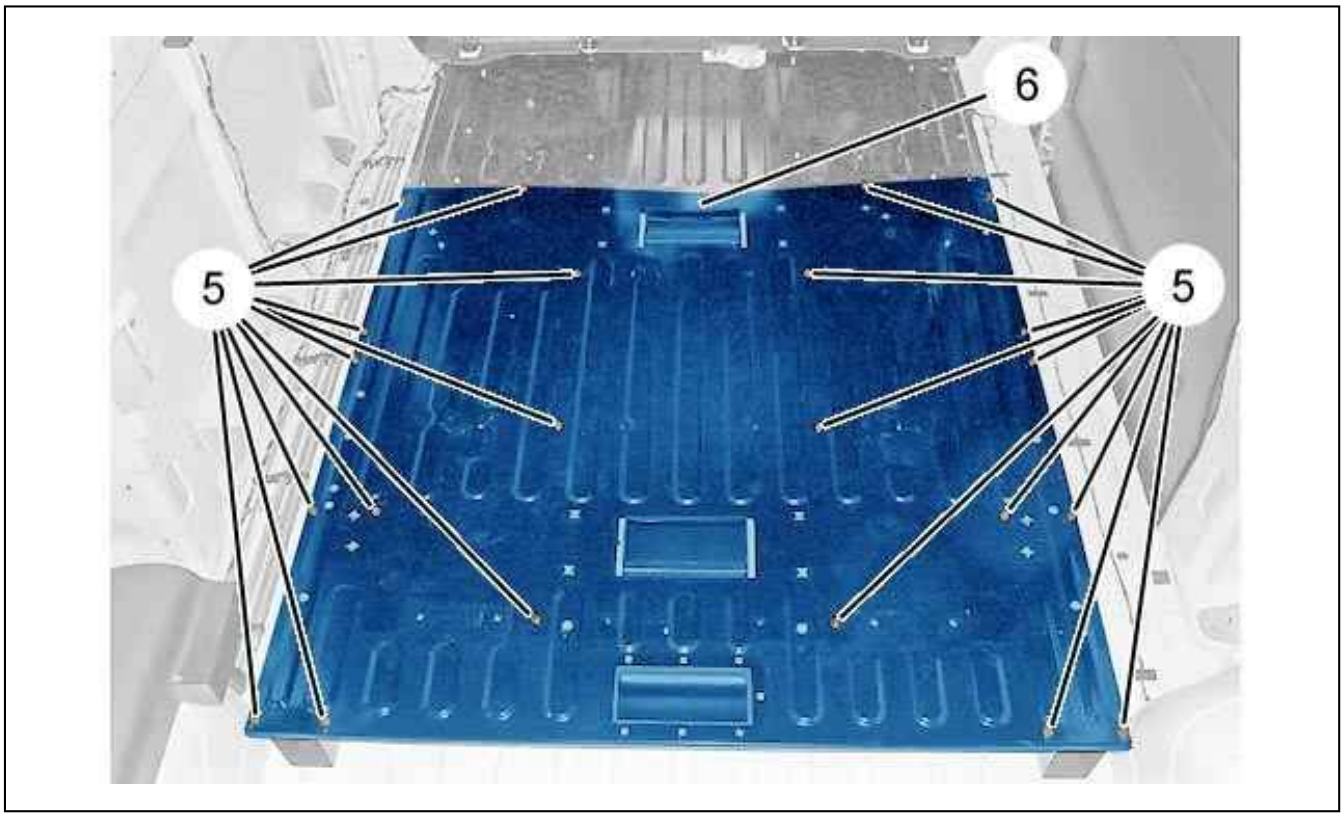

Figure : C4BM0END

Remove :

- The bolts (5)
- The false floor (6) (rear section)

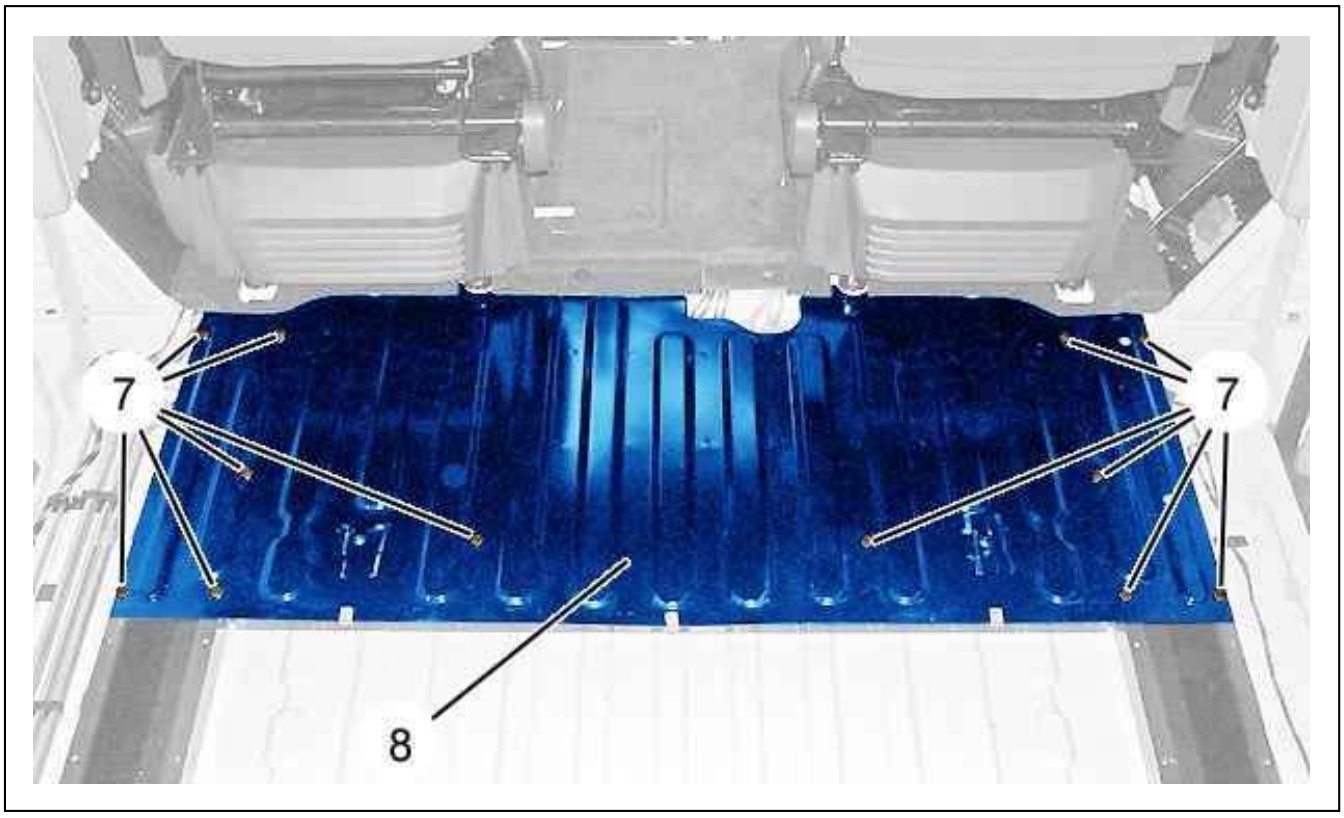

Figure : C4BM0EPD

Remove :

- The bolts (7)
- The false floor (8) (front section)

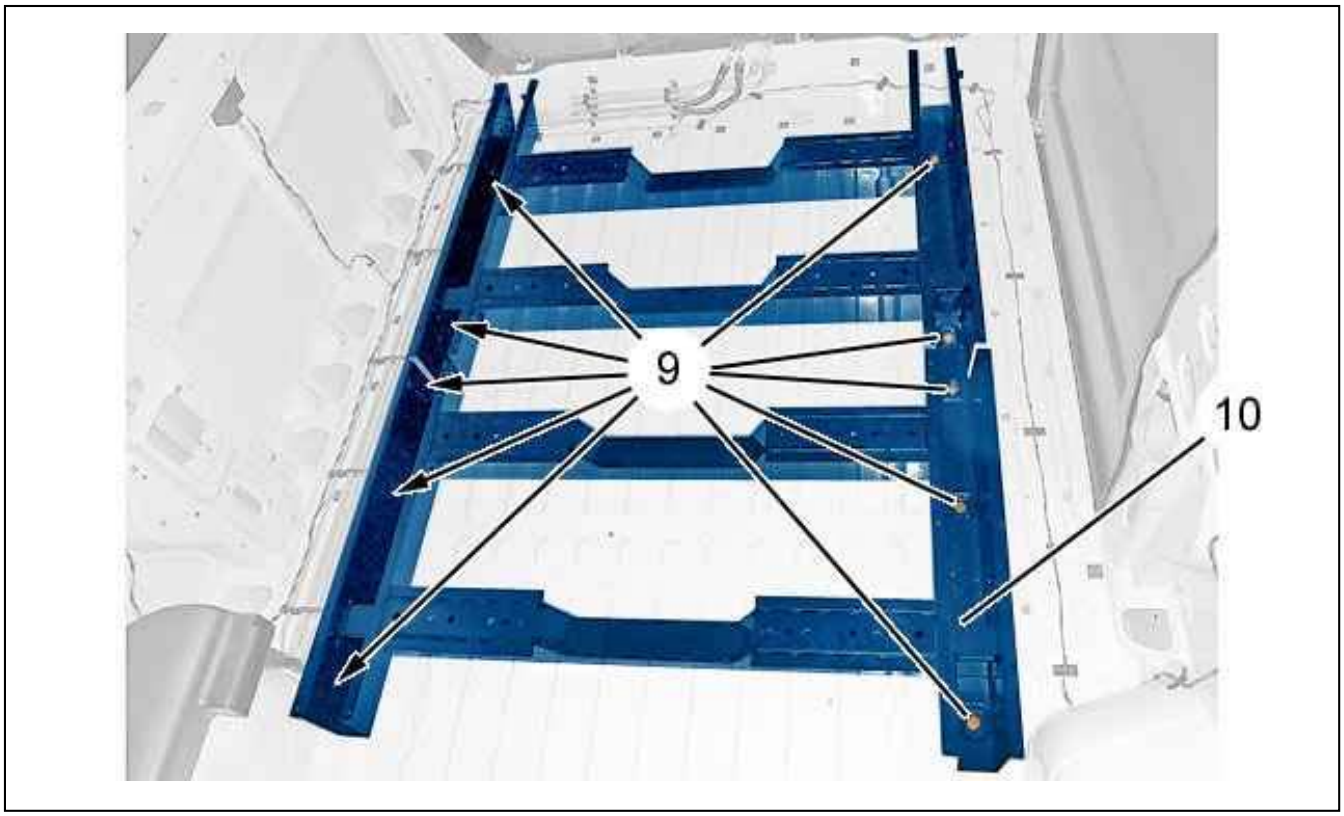

Figure : C4BM0EQD

Remove :

- The bolts (9)
- The bracket (10) (False floor)

3. Refitting

Proceed in the reverse order to removal.
Tighten :

- The bolts (5), (7) to 1 ± 0,1 daN.m
- The bolts (9) to 8 ± 1 daN.m

Check all the equipment works.

REMOVING - REFITTING : FRONT BENCHSEAT (ROW 1)

ESSENTIAL : Observe the safety and cleanliness recommendations .

1. Removing



Figure : C5GG1E3D

Under the benchseat (1).
Release the toolbox (2) (in direction "a").
Remove the toolbox (2).
Remove the head restraints .

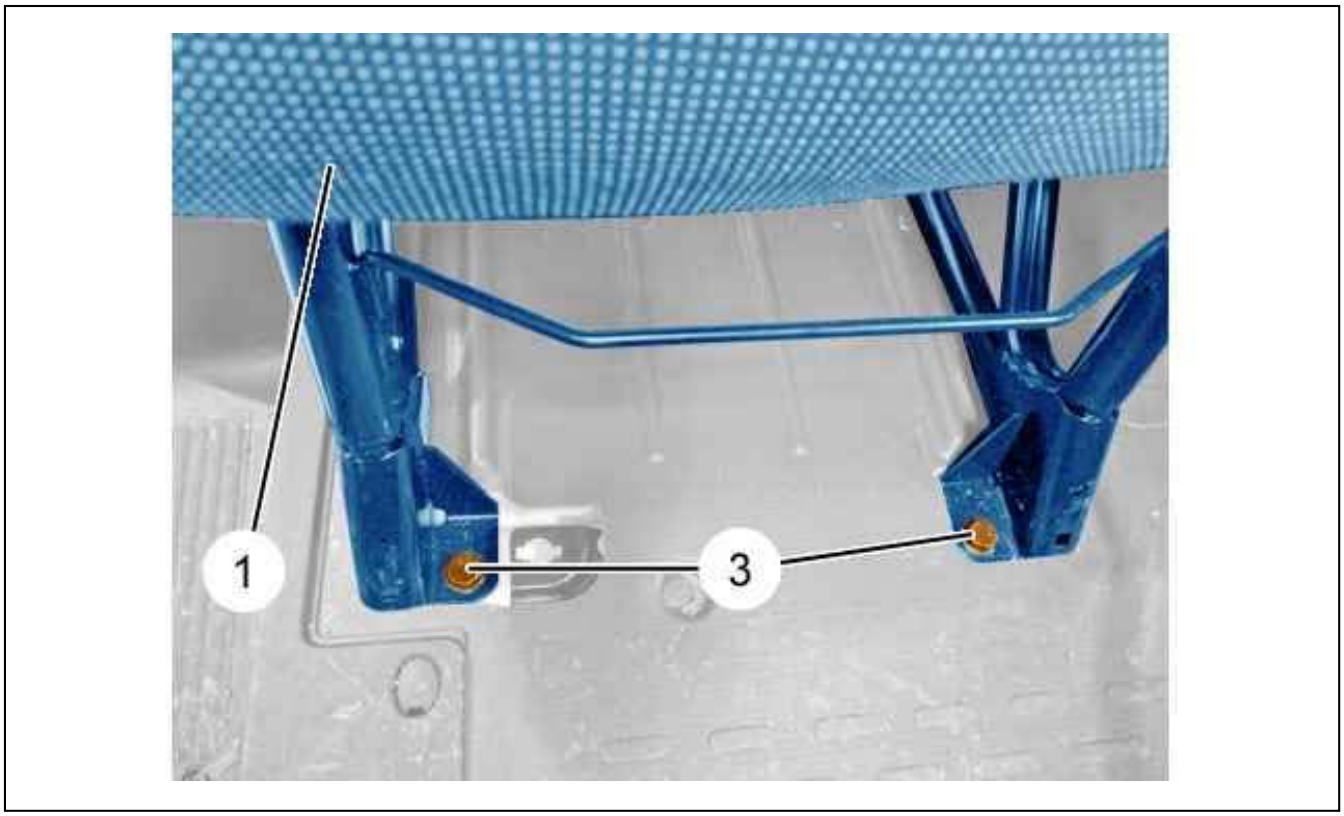

Figure : C5GG1E4D

Remove the bolts (3) from the benchseat (1).

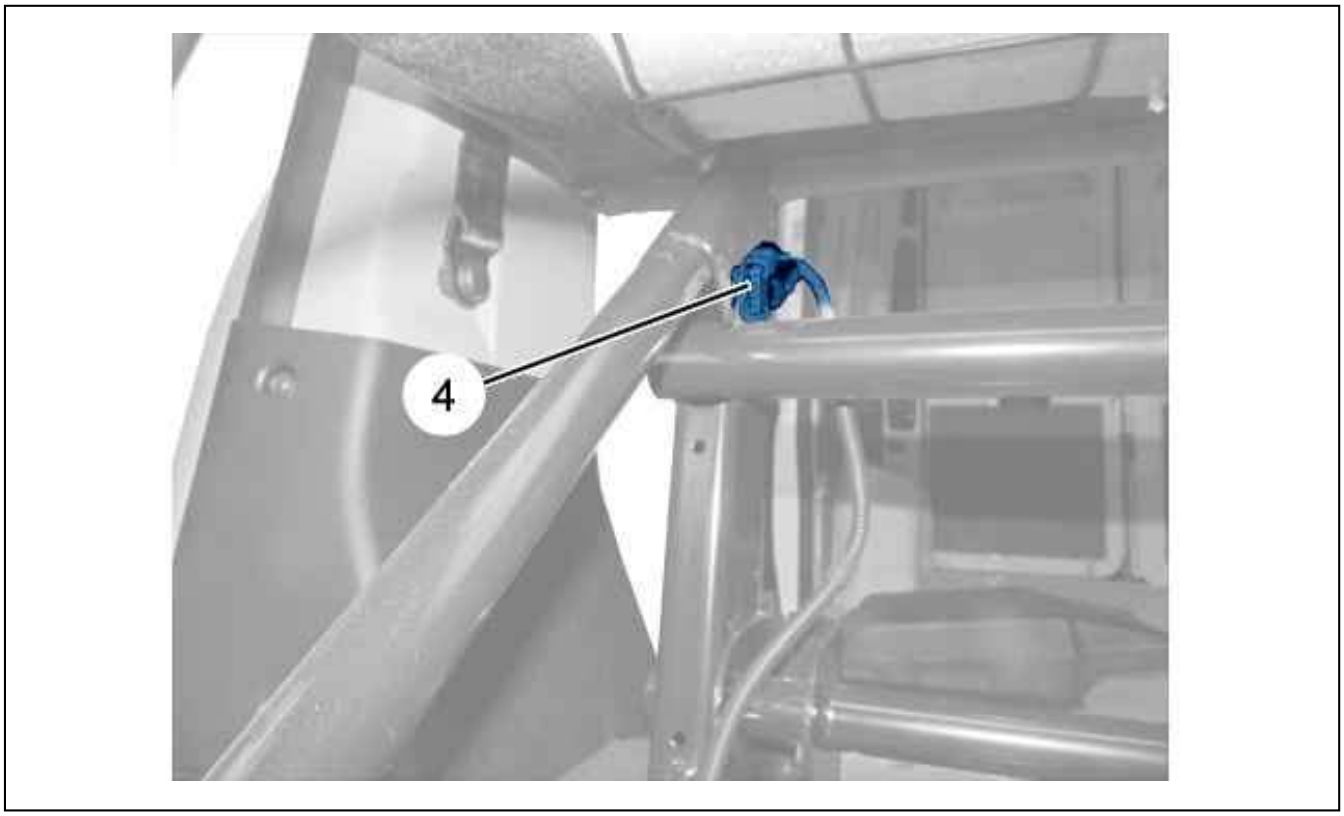

Figure : C5GG1E5D

Unclip the connector (4).

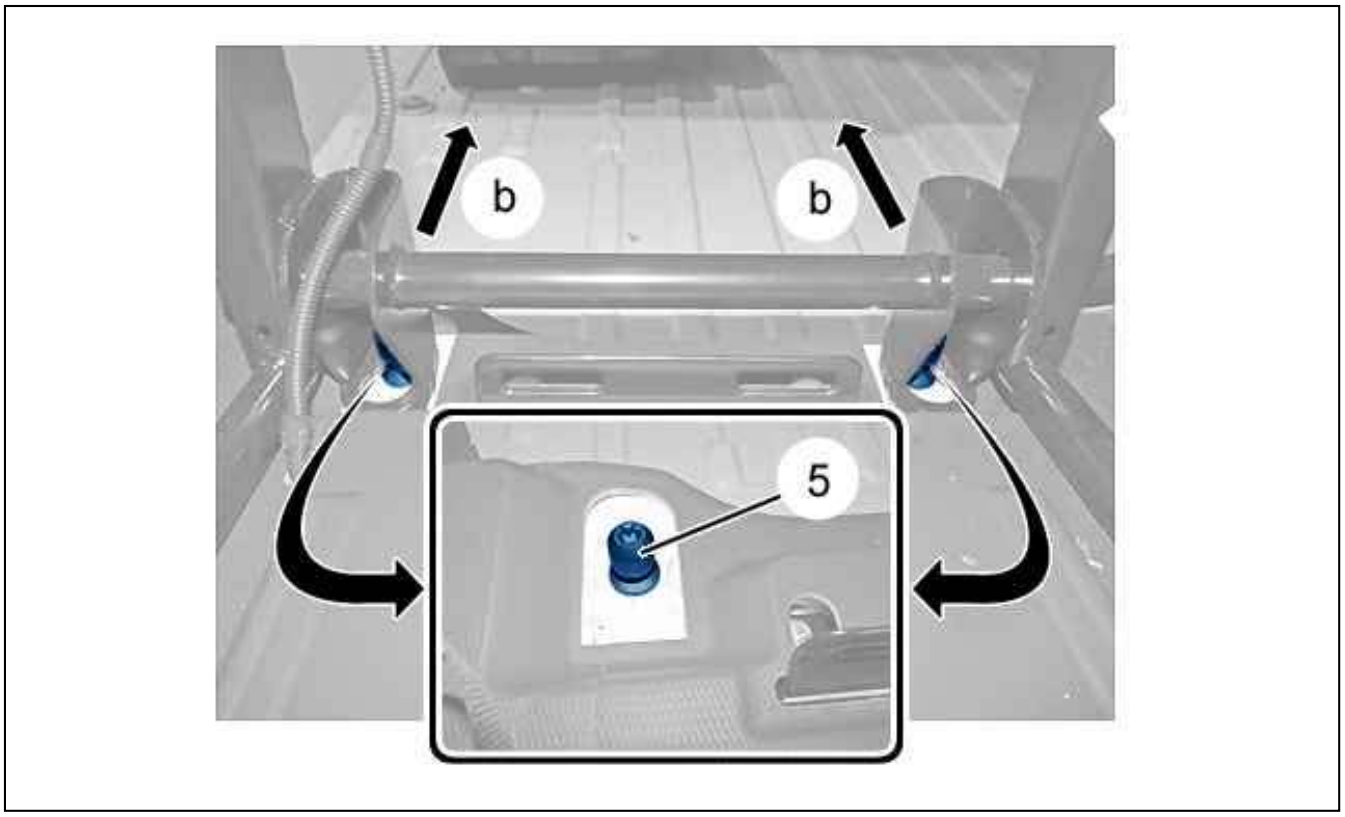

Figure : C5GG1E6D

Release the benchseat (1) from the studs (5) and pull it rearwards (in direction "b").
Remove the benchseat (1).

2. Refitting

Proceed in the reverse order to removal.
Tighten the bolts (3) to 5,5 m.daN .
Attach the connector (4).
Refit the head restraints.
Refit the toolbox (2).

REMOVING - REFITTING : FRONT SEAT DRAWER

ESSENTIAL : Observe the safety and cleanliness recommendations .

1. Tooling

Tool	Reference	Designation
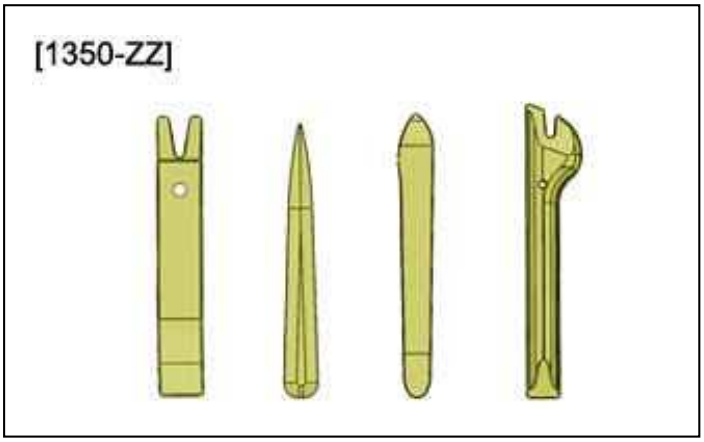 Figure : E5AG02MT	[1350-ZZ]	Stripping tools

2. Removing

Disconnect the ancillaries battery .

N.B. : Removing the front seat is not necessary.



Figure : C5GG1IYD

Remove :

- The bolts (2)
- The front trim (1)

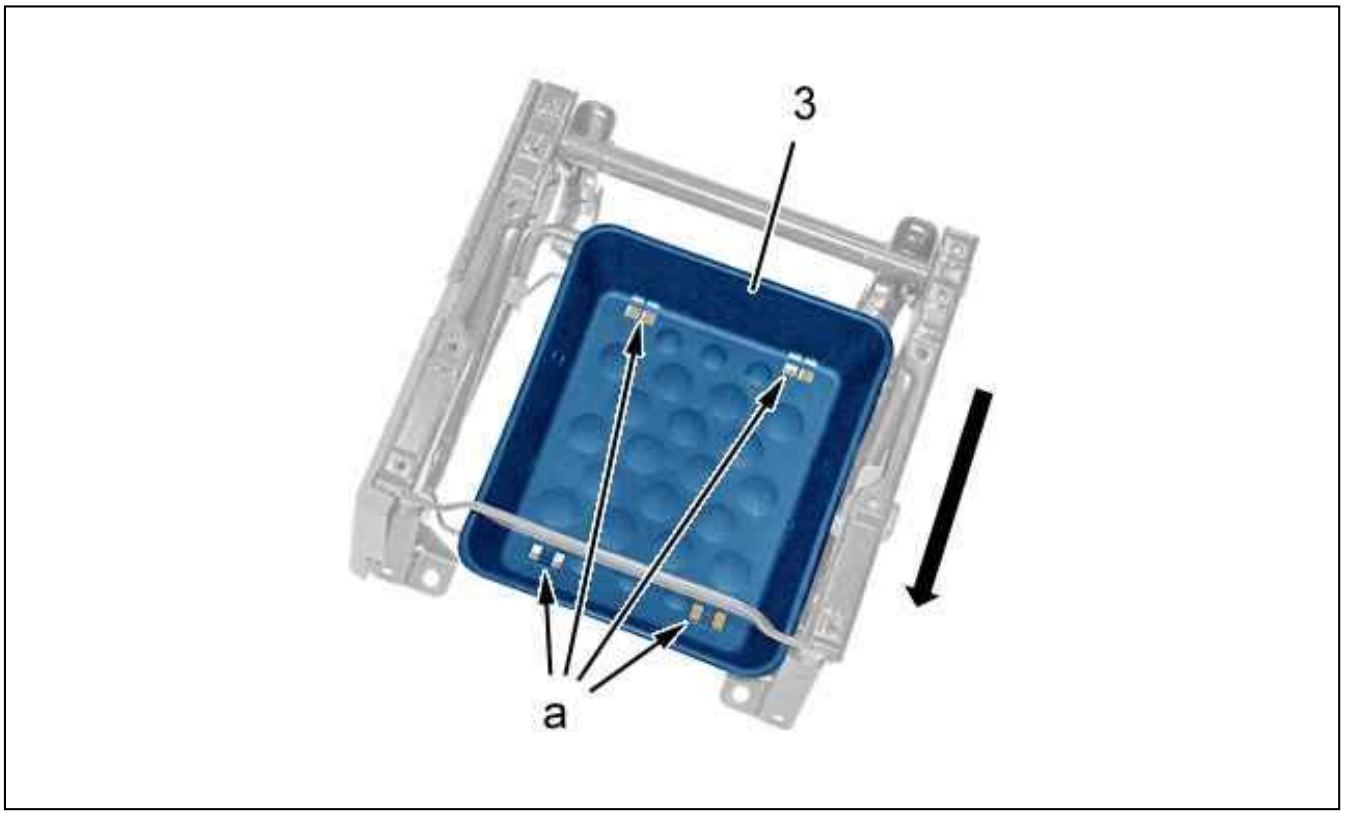

Figure : C5GG1IZD

Unclip the seat drawer (3) (at "a").
Remove the seat drawer (3) (In the direction of the arrow).

3. Refitting

Proceed in the reverse order to removal.

CAUTION : Perform the operations that are required following a reconnection of the ancillaries battery.

Reconnect the ancillaries battery .
Check all the equipment works.

REMOVING - REFITTING : DRIVER’S SEAT

ESSENTIAL : Observe the safety and cleanliness recommendations .

1. Removing

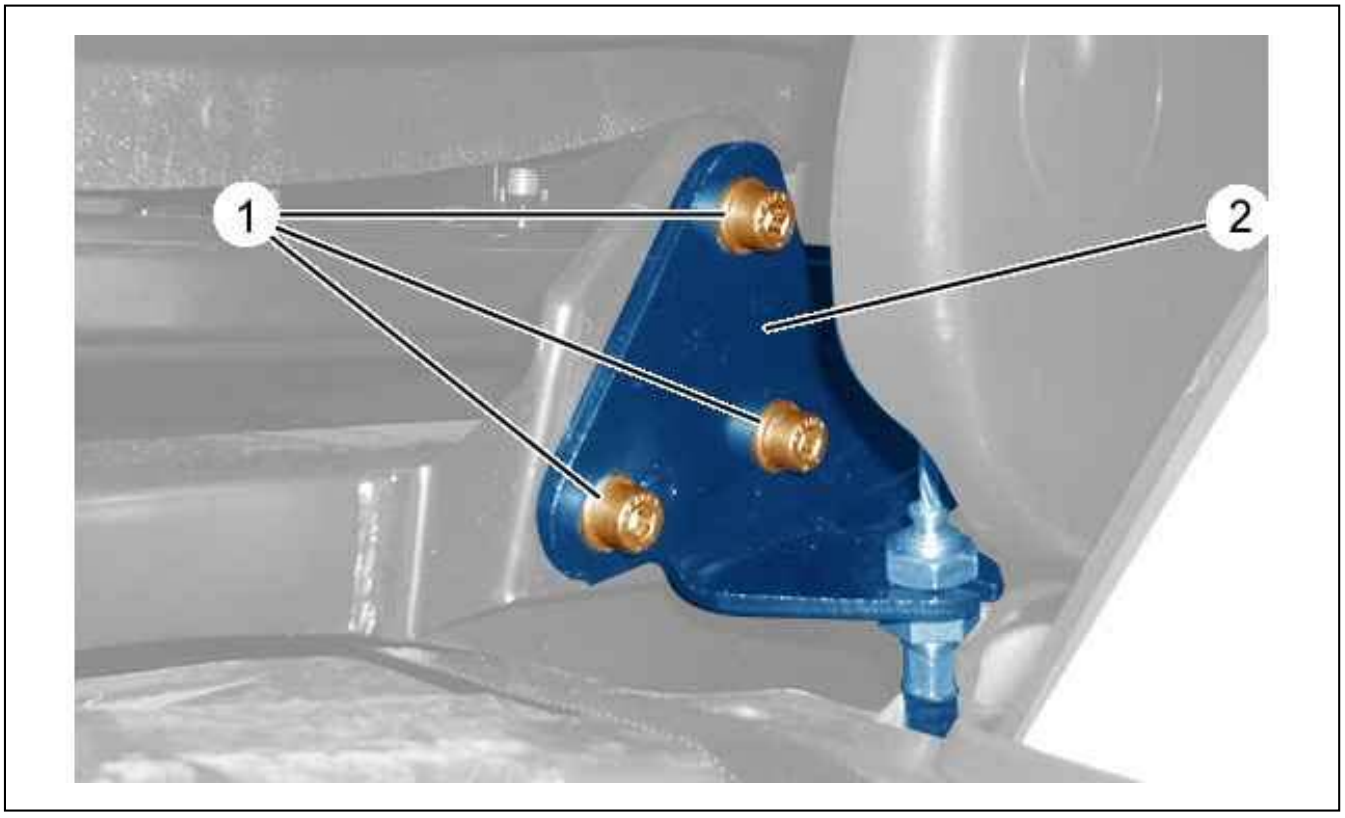

Figure : C5GP0MZD

Remove the screws (1) from the handbrake (2) (driver’s side).

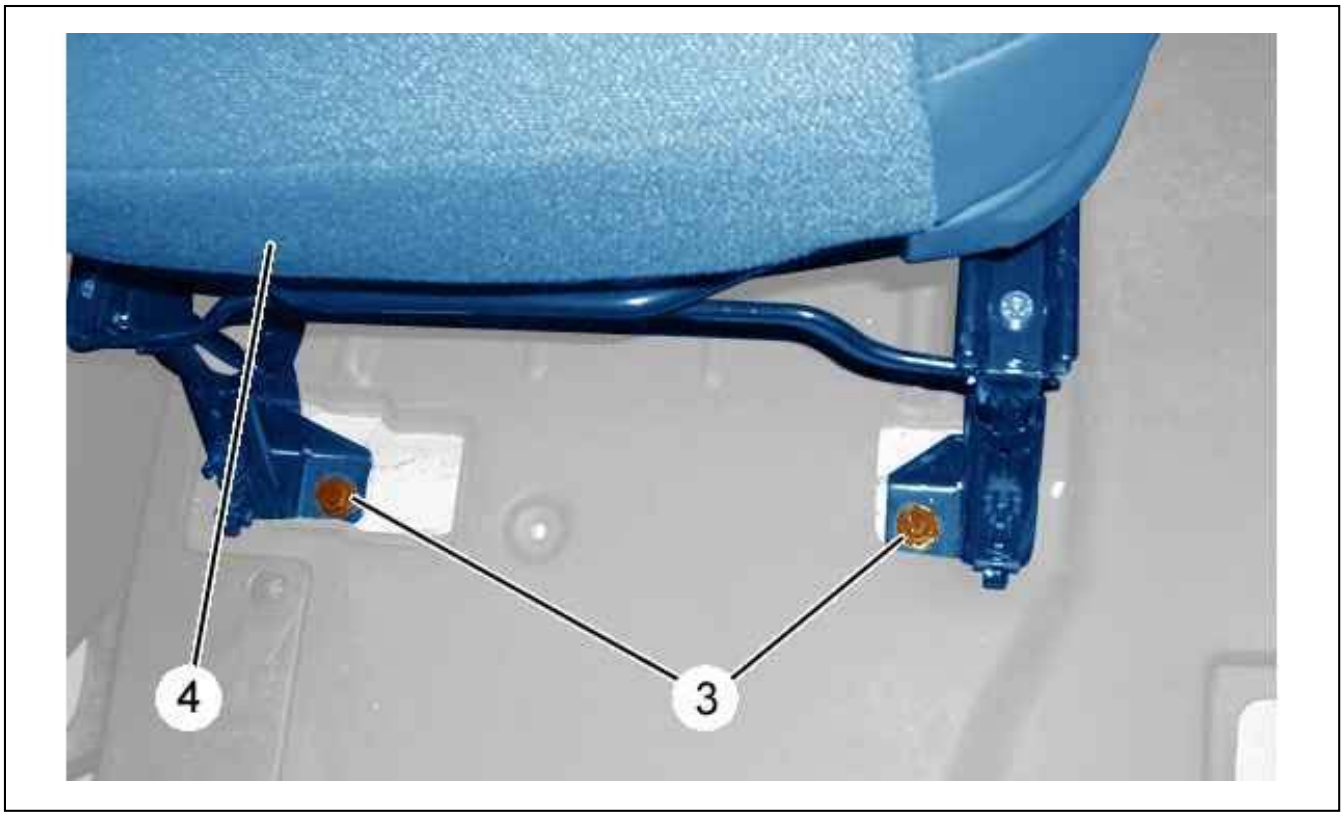

Figure : C5GP0N0D

Remove the screws (3) from the seat (4).

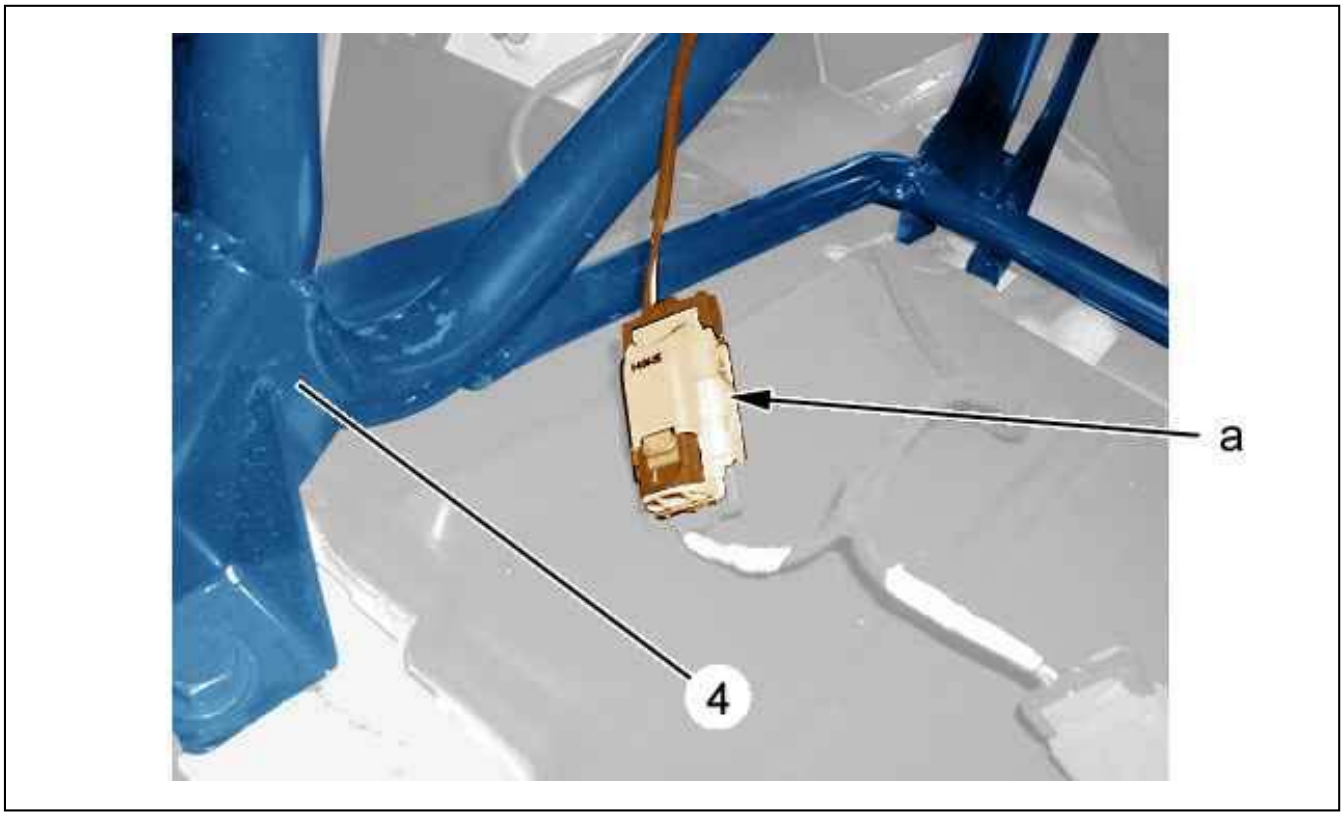

Figure : C5GP0N1D

Disconnect the connector ("a") from the seat (4).
Remove the seat (4).

Tilt the seat rearwards, pivoting it to remove it from its anchorage.

2. Refitting

Proceed in the reverse order to removal.
Apply thread lock to the bolts (1), (3).
Tighten :

- The bolts (3) to 5,5 daNm
- The bolts (1) to 2 daNm

REMOVING - REFITTING : FRONT CARPET

1. Removing

Remove :

- The door sill trim (see the relevant operation)
- The front pillar trim (see the relevant operation)
- The front seats (see the relevant operations)
- The central glove box lower trim (see the relevant operation)



Figure : C5GP0NKD

Remove :

- The screws (1) of the RH lower glovebox lower trim (2)
- The RH lower glovebox lower trim (2)

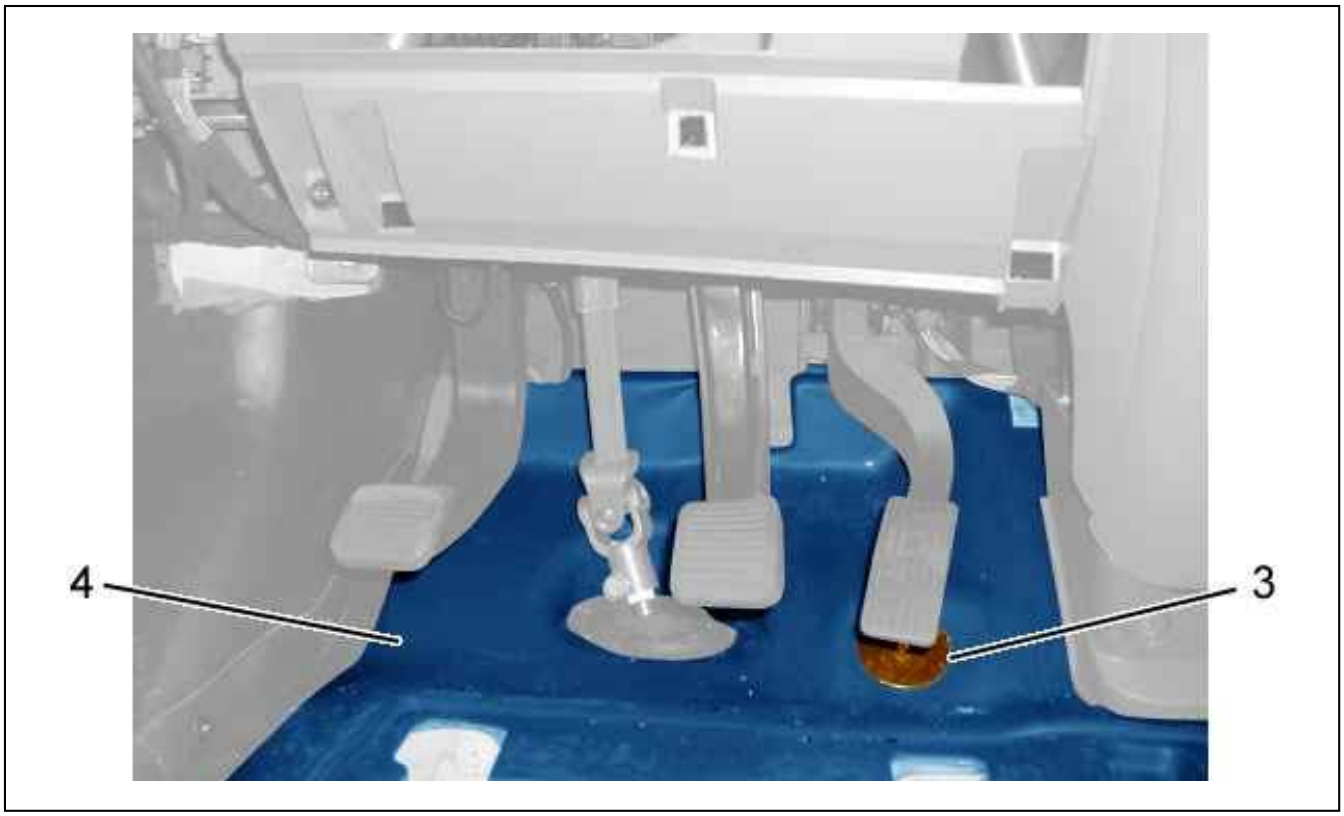

Figure : C5GP0NLD

Disengage and push the lower part of the steering column upwards (see corresponding procedure).
Remove the front carpet (4) bolt (3).

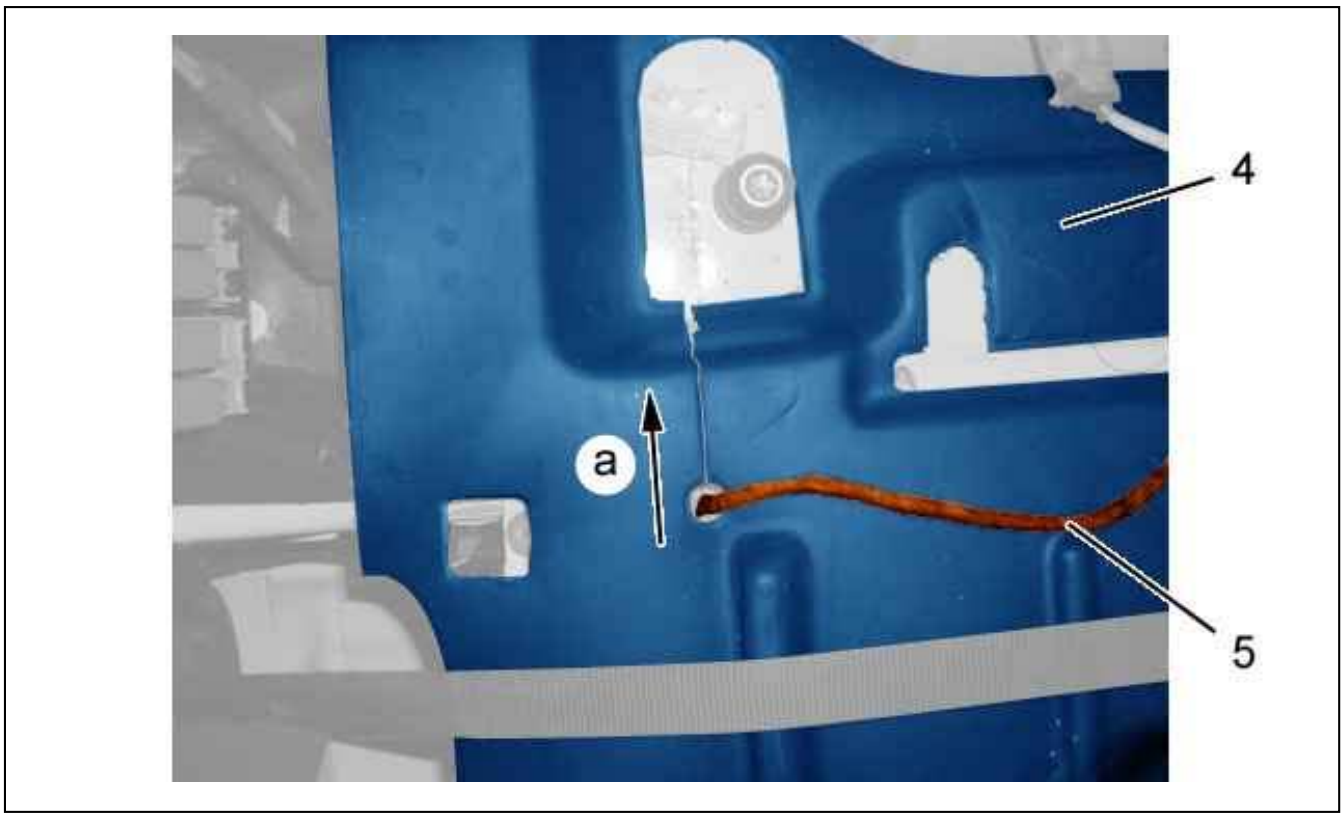

Figure : C5GP0NMD

Disengage the front passenger seat harness (5) from the front carpet (4) (following "a").

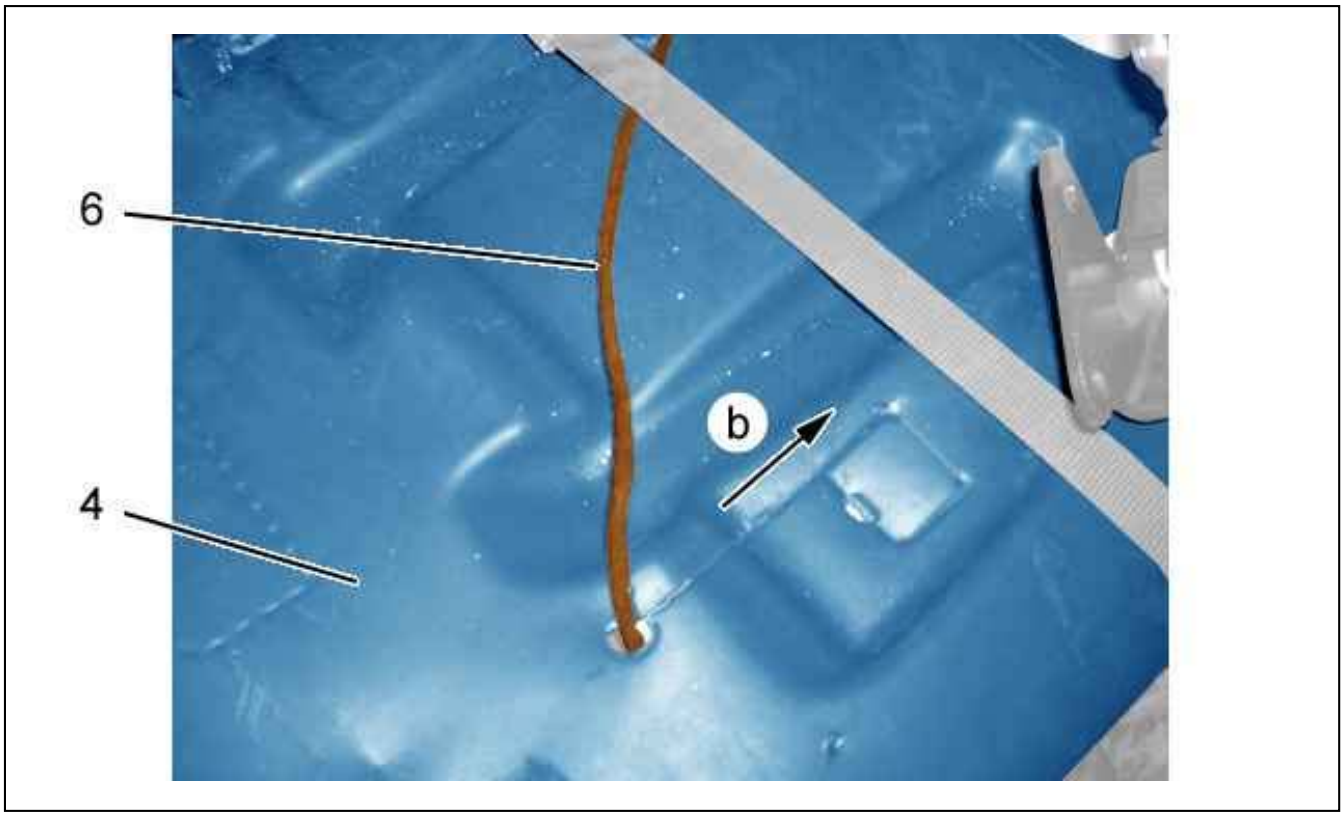

Figure : C5GP0NND

Disengage the driver’s seat harness (6) from the front carpet (4) (following "b").

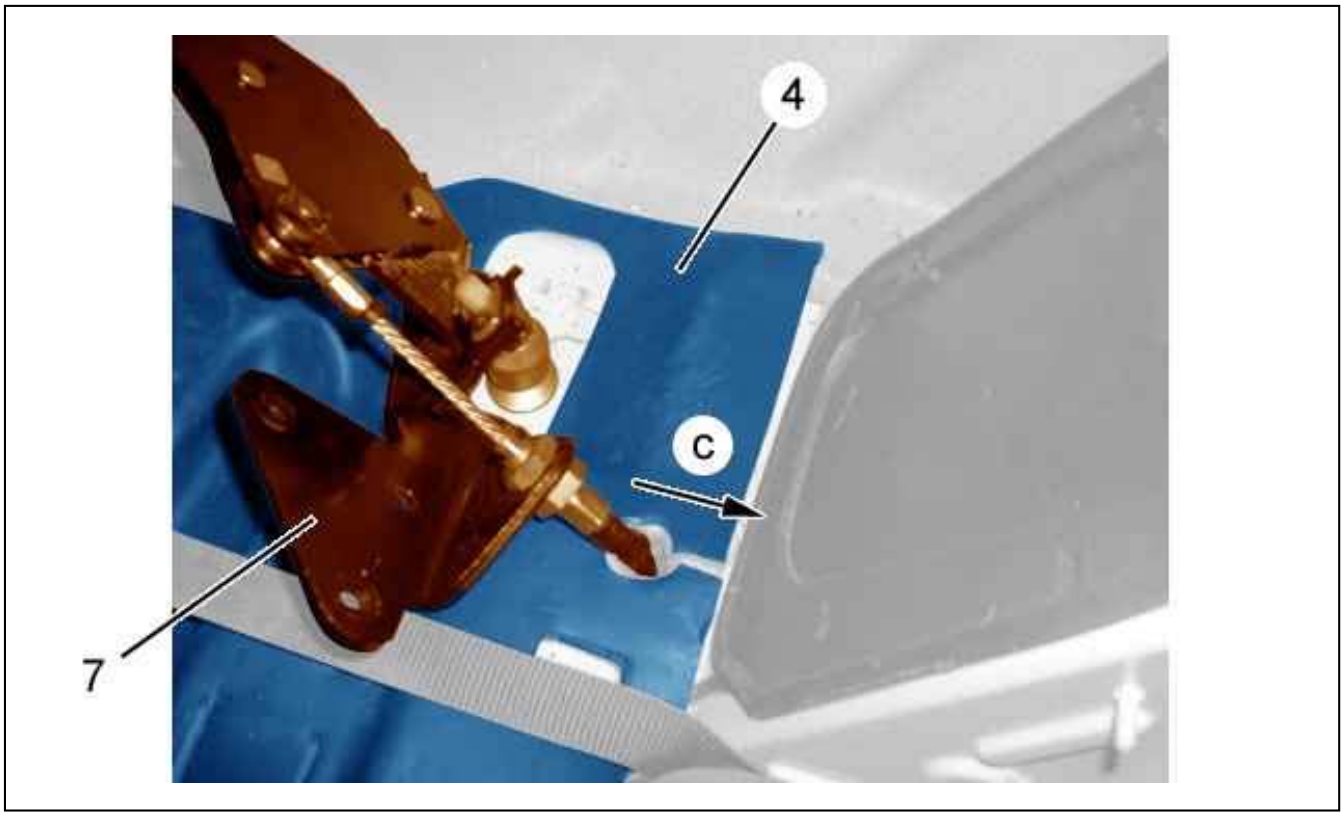

Figure : C5GP0NPD

Disengage the handbrake cable (7) from the front carpet (4) (following "c").

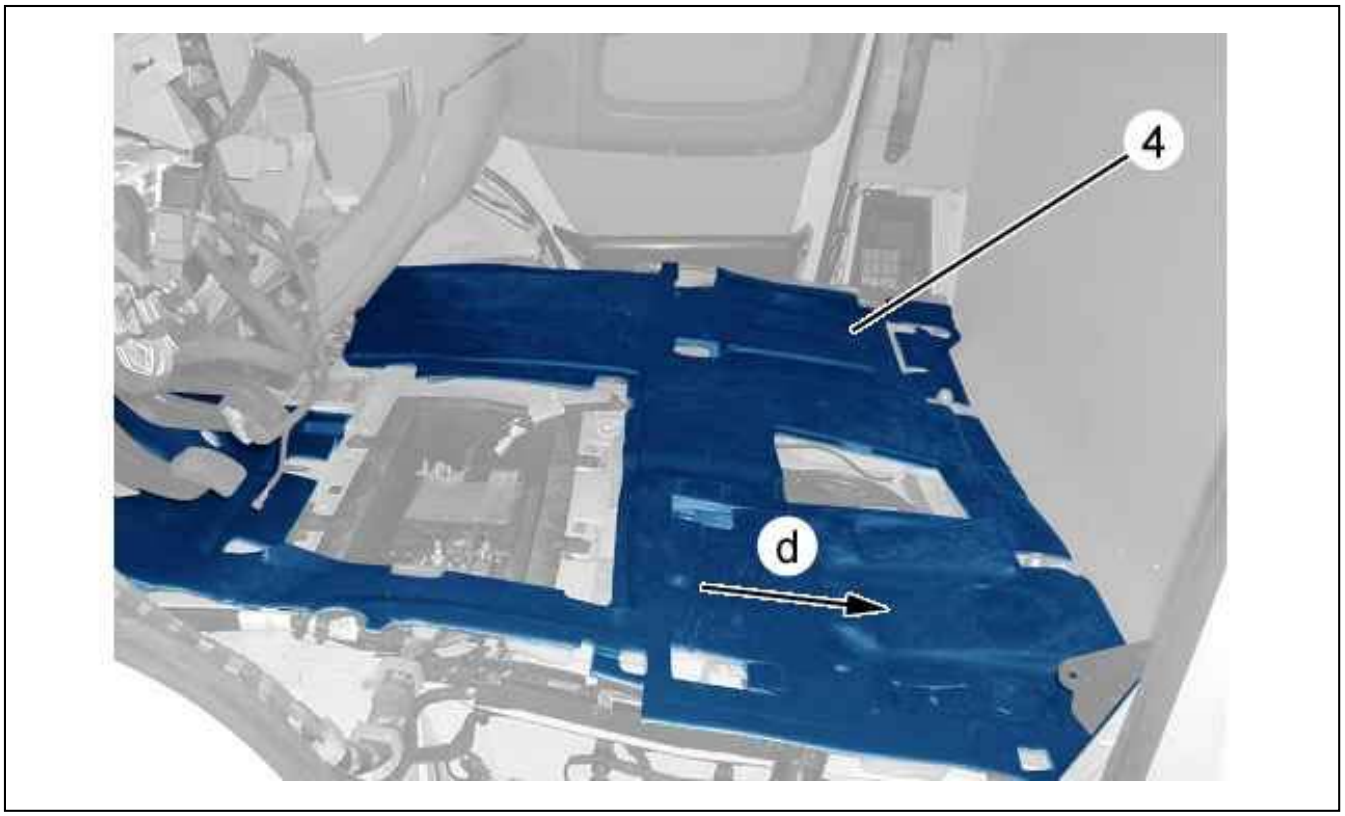

Figure : C5GP0NQD

Detach the front carpet (4) (following "d").
Remove the front carpet (4).

2. Refitting

Proceed in the reverse order to removal.

REMOVING - REFITTING : REAR SEATS (ROW 2)

ESSENTIAL : Observe the safety and cleanliness recommendations.

1. Removing

Perform the following operations :

- Switch off the ignition
- Wait 3 minutes before disconnecting the battery
- Disconnect the battery



Figure : C5GM0D6D

Remove the bolts (1).

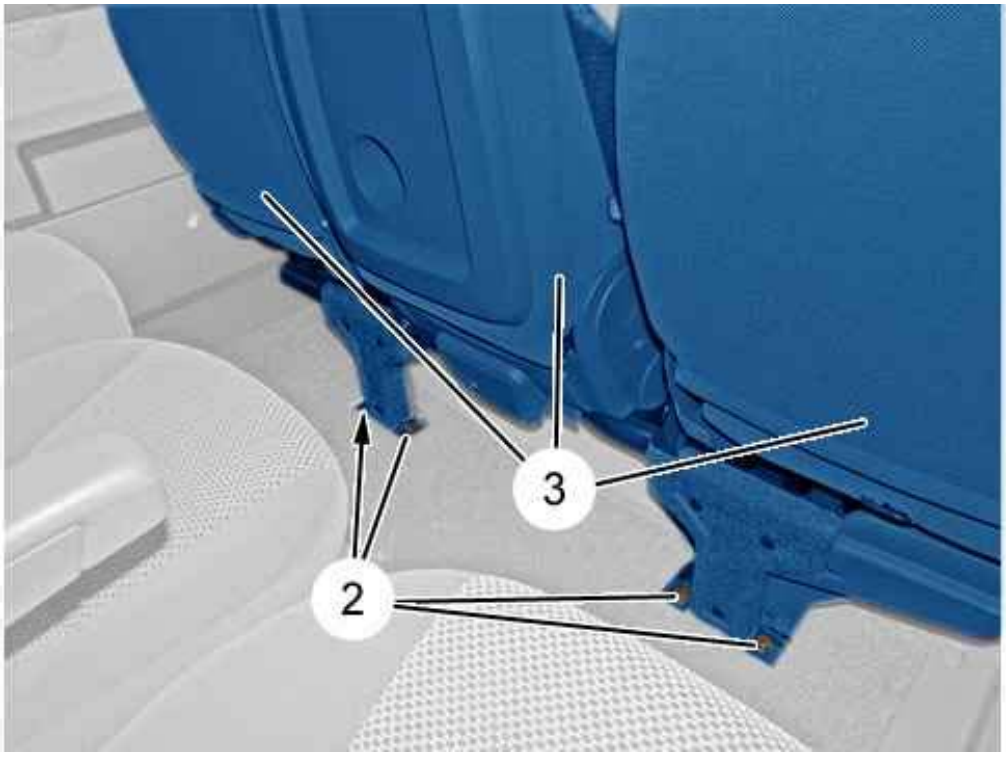

Figure : C5GM0D7D

N.B. : Two people are required to perform the following operation.

Remove :

- The bolts (2)
- The rear seats (row 2) (3) (Through the sliding door)

2. Refitting

Proceed in the reverse order to removal.
Tighten the bolts (1), (2) to 8 ± 1 daN.m.
Check all the equipment works.

REMOVING - REFITTING : REAR SEATS (ROW 3)

ESSENTIAL : Observe the safety and cleanliness recommendations.

1. Removing

Perform the following operations :

- Switch off the ignition
- Wait 3 minutes before disconnecting the battery
- Disconnect the battery

Remove the rear seats (row 2).

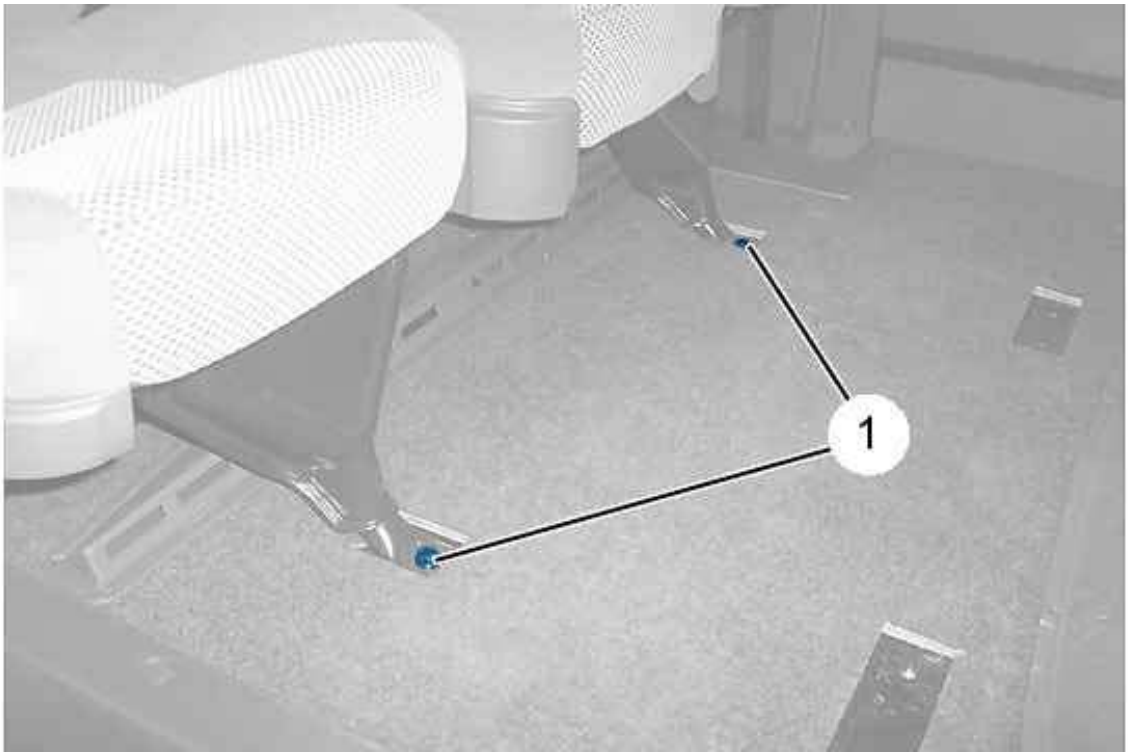

Figure : C5GM0D8D

Remove the bolts (1).

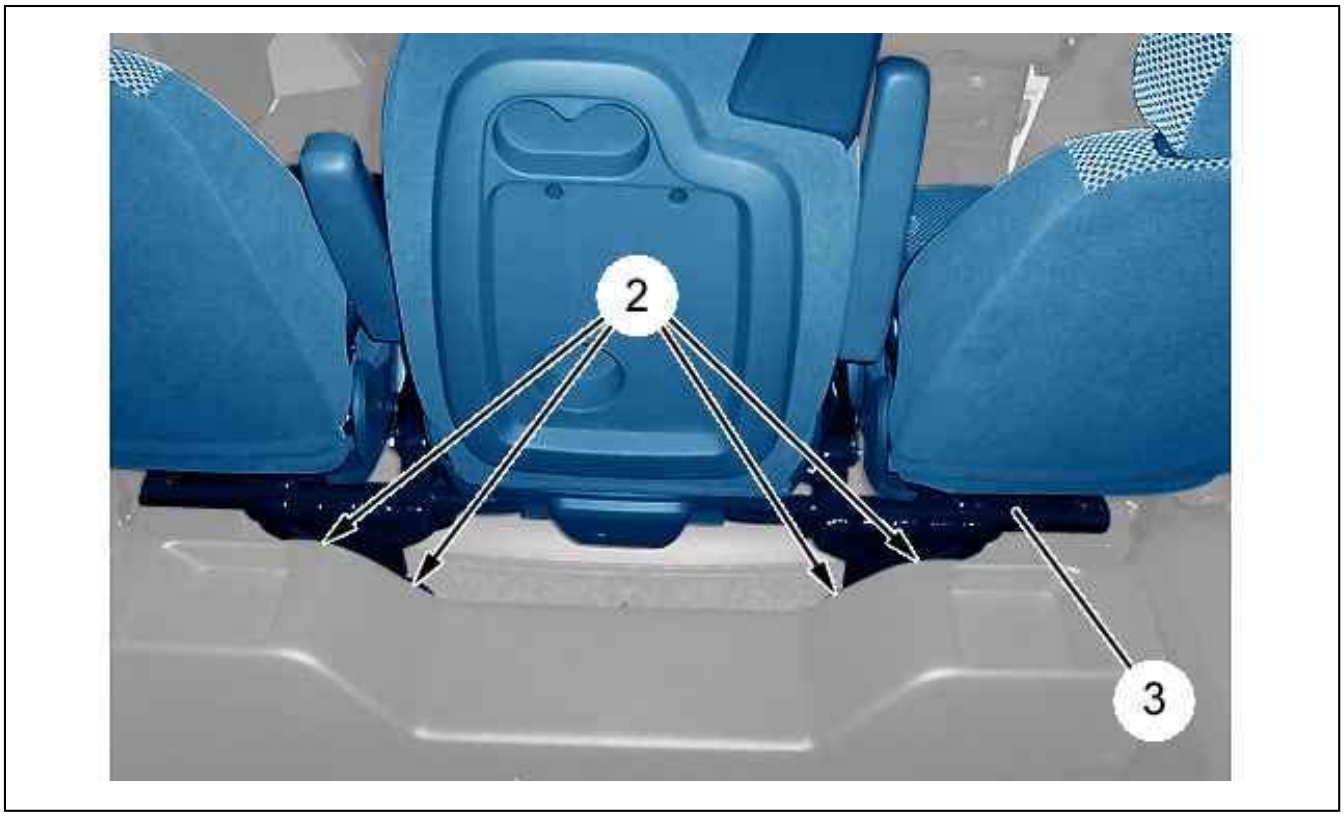

Figure : C5GM0D9D

N.B. : Two people are required to perform the following operation.

Remove :

- The bolts (2)
- The rear seats (row 3) (3) (Through the sliding door)

2. Refitting

Proceed in the reverse order to removal.
Tighten the bolts (1), (2) to 8 ± 1 daN.m.
Check all the equipment works.

REMOVING - REFITTING : FRONT SEAT

ESSENTIAL : Observe the safety and cleanliness recommendations .

1. Tooling

Tool	Reference	Designation
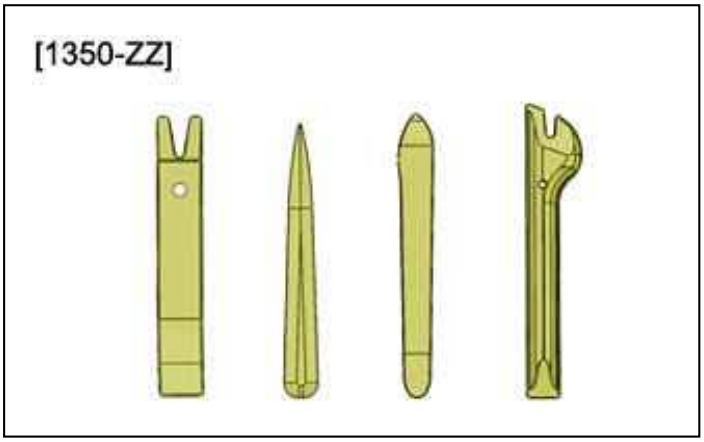 Figure : E5AG02MT	[1350-ZZ]	Stripping tools

2. Removing

Disconnect the ancillaries battery .

2.1. Front seat

Slide the front seat rearwards as far as possible.

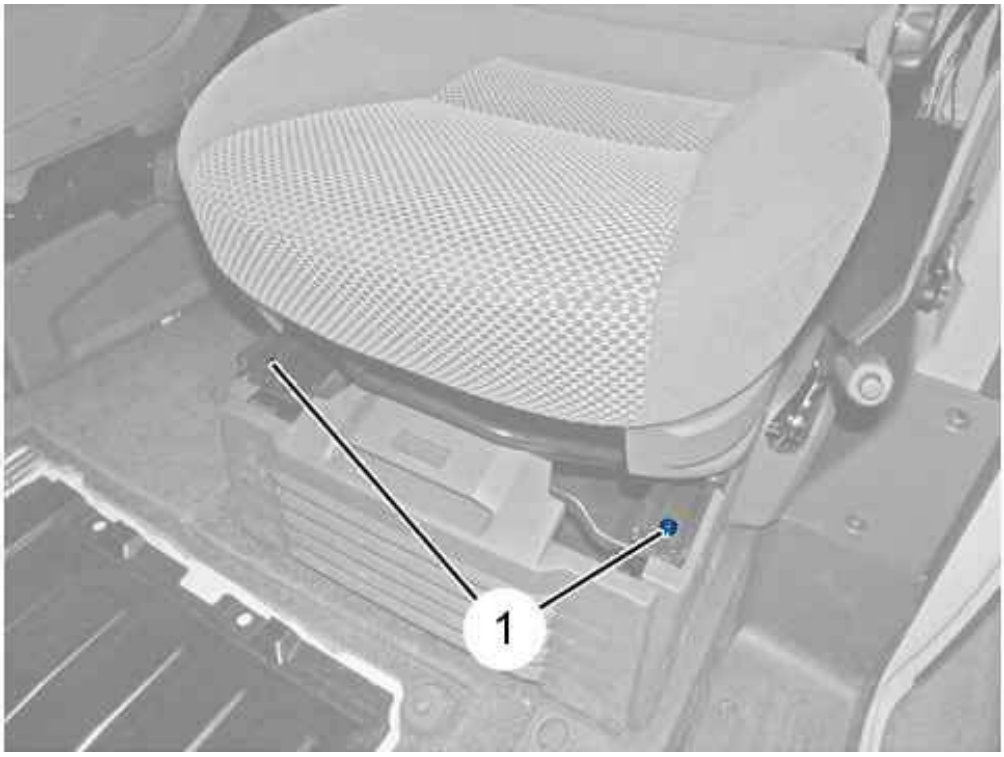

Figure : C5GM0CVD

Remove the bolts (1).
Slide the front seat forward as far as possible.

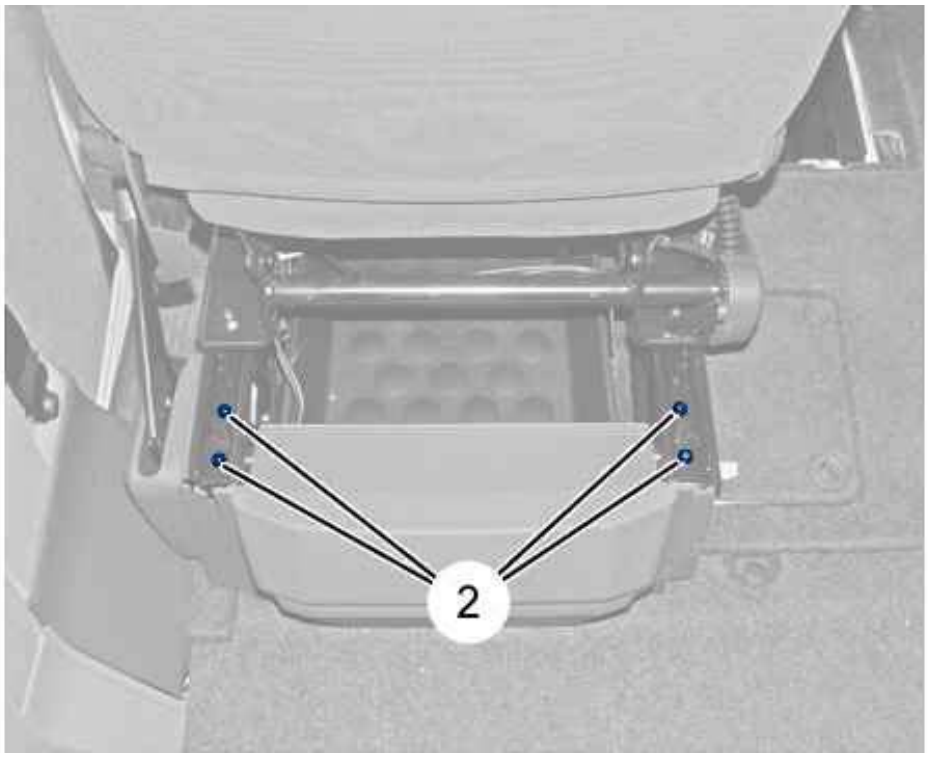

Figure : C5GM0CWD

Remove the bolts (2).

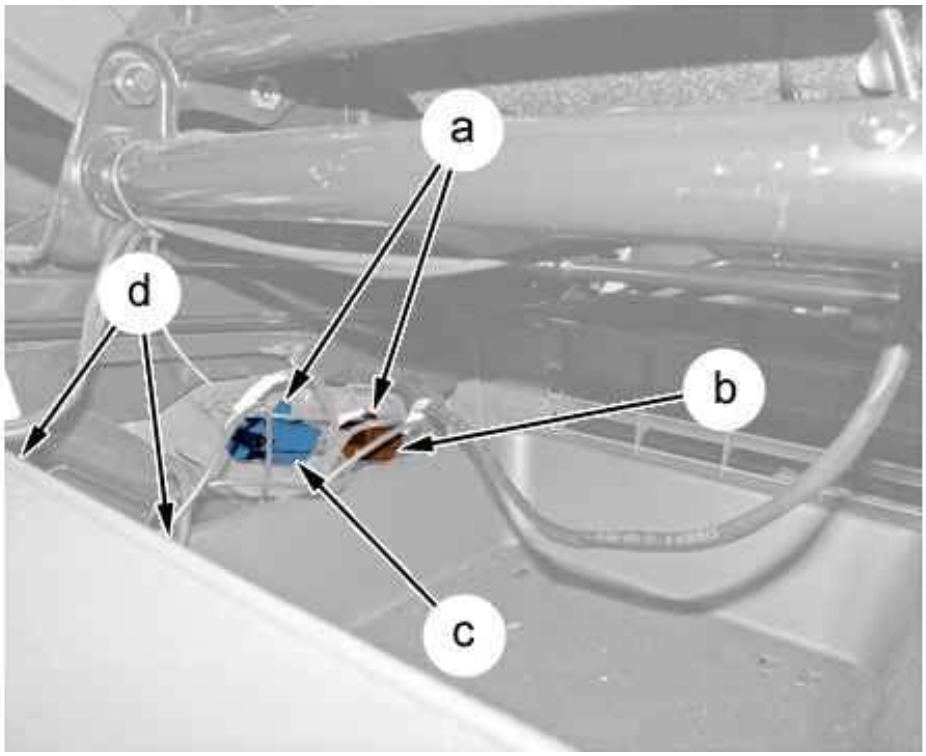

Figure : C5GM0CXD

Unclip the connectors "b", "c" (at "a").
Disconnect the connectors "b", "c".
Cut the harness securing tie-wraps (at "d").



Figure : C5GM0CYD

Remove the front seat (3).

2.2. Storage box (Front passenger seat)

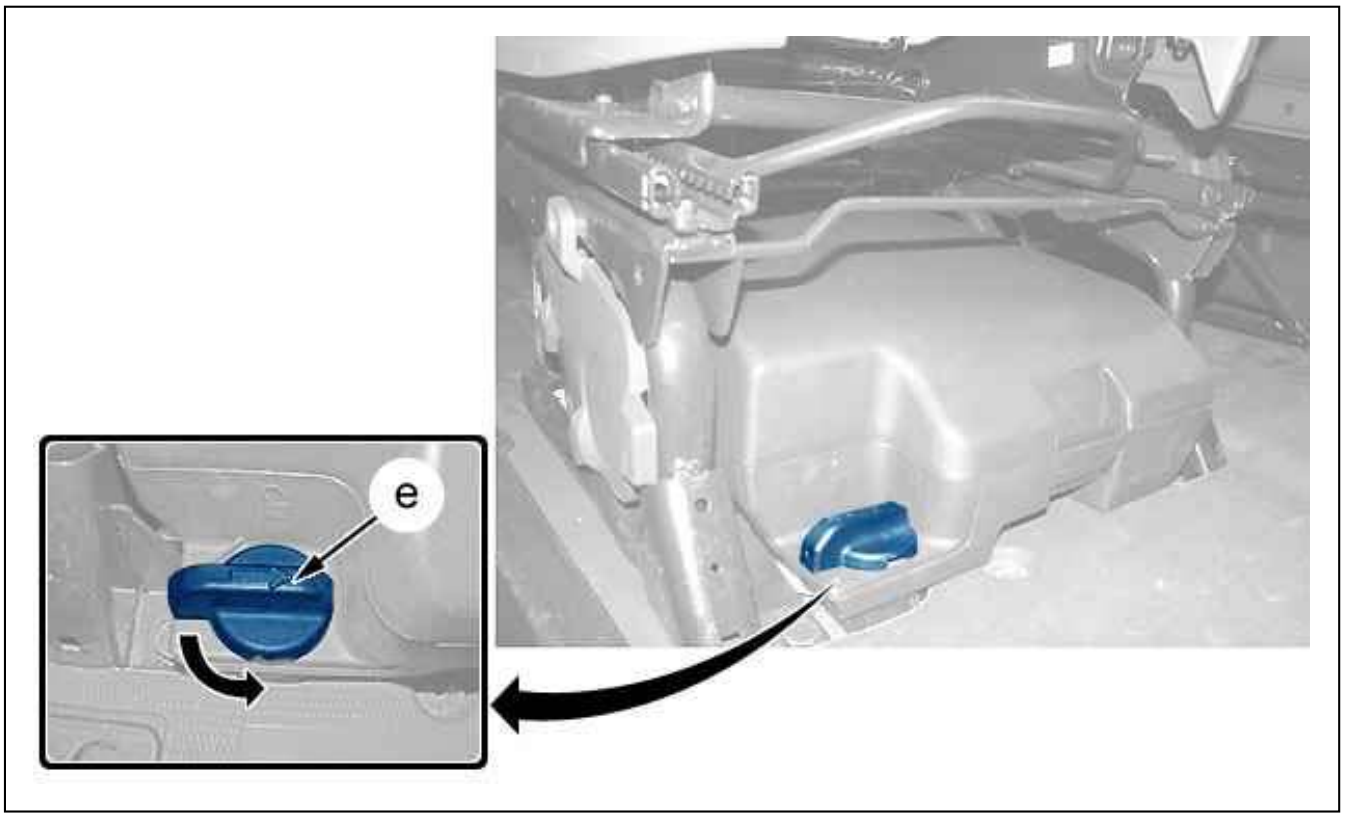

Figure : C5GG1GSD

Rotate the lock a quarter turn (at "e") (following the arrow).



Figure : C5GG1GTD

Release and remove the storage box (4) (following the arrow).

2.3. Seat support (front)

Open the front trim of the front seat support.

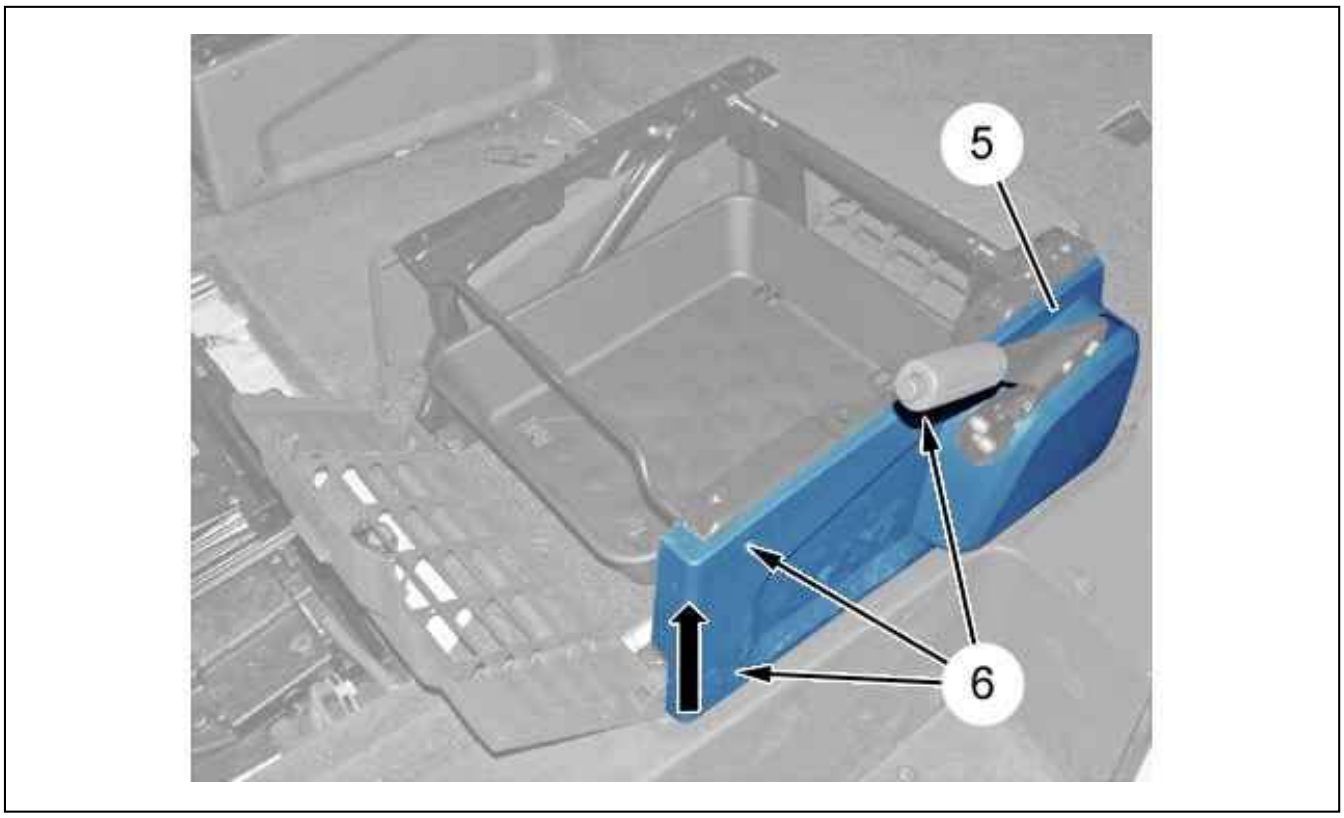

Figure : C5GG1GUD

Remove the bolts (6).
Detach the side trim (5) (Seat support) (following the arrow).
Remove the side trim (5).

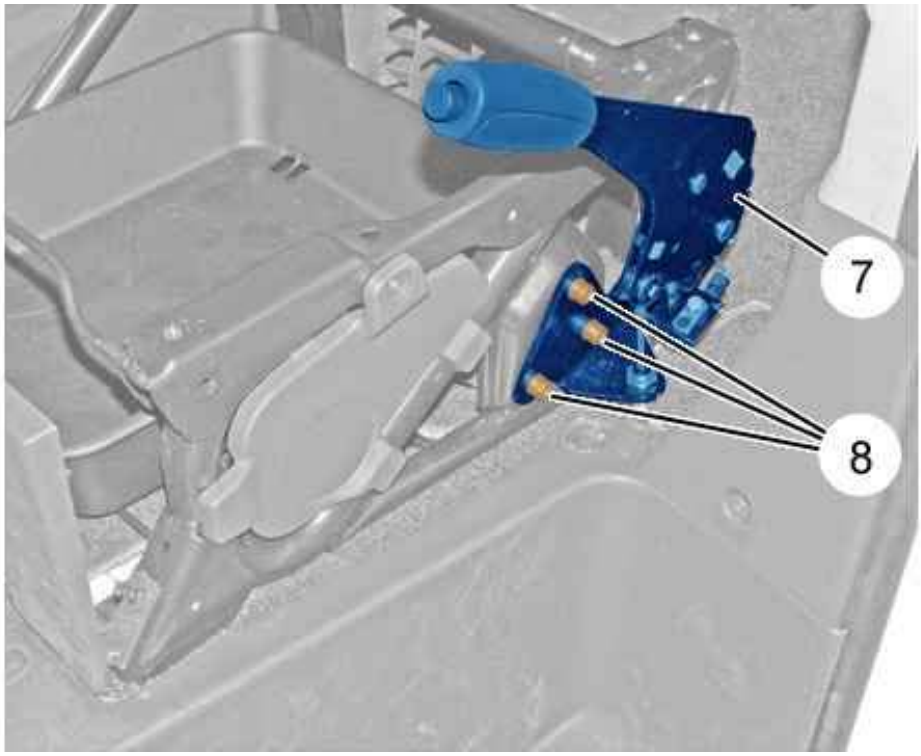

Figure : C5GG1GVD

ESSENTIAL : Wedge the vehicle.

Remove the bolts (8).
Disengage the parking brake lever (7).

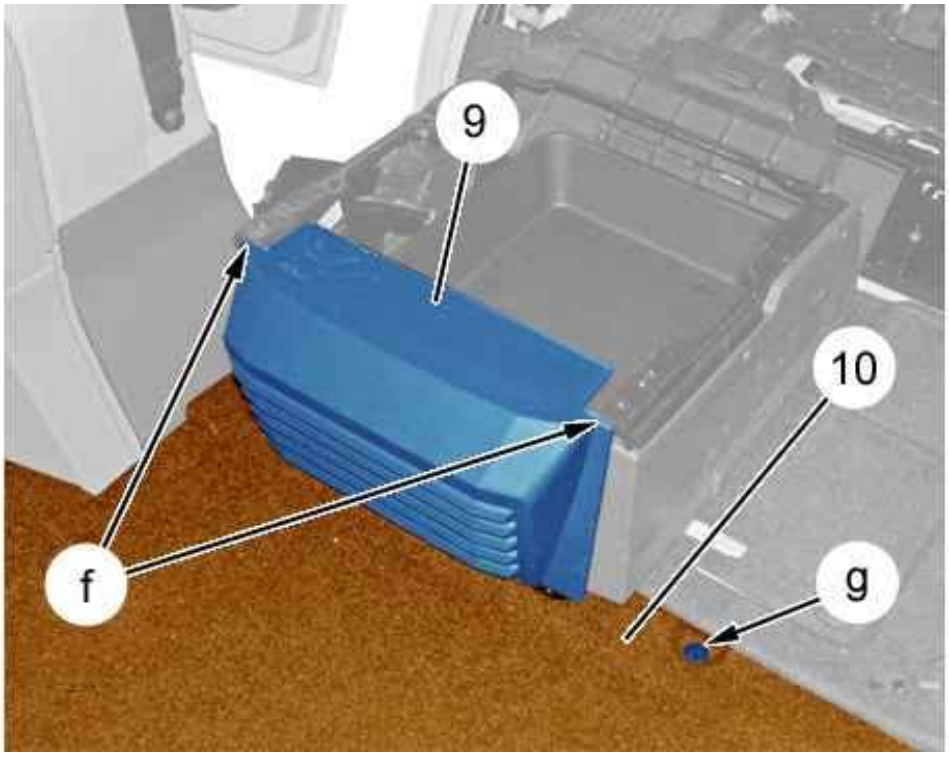

Figure : C5GG1GWD

Unclip the trim (9) (at "f").
Remove the trim (9).
Detach the carpet (10) (at "g").

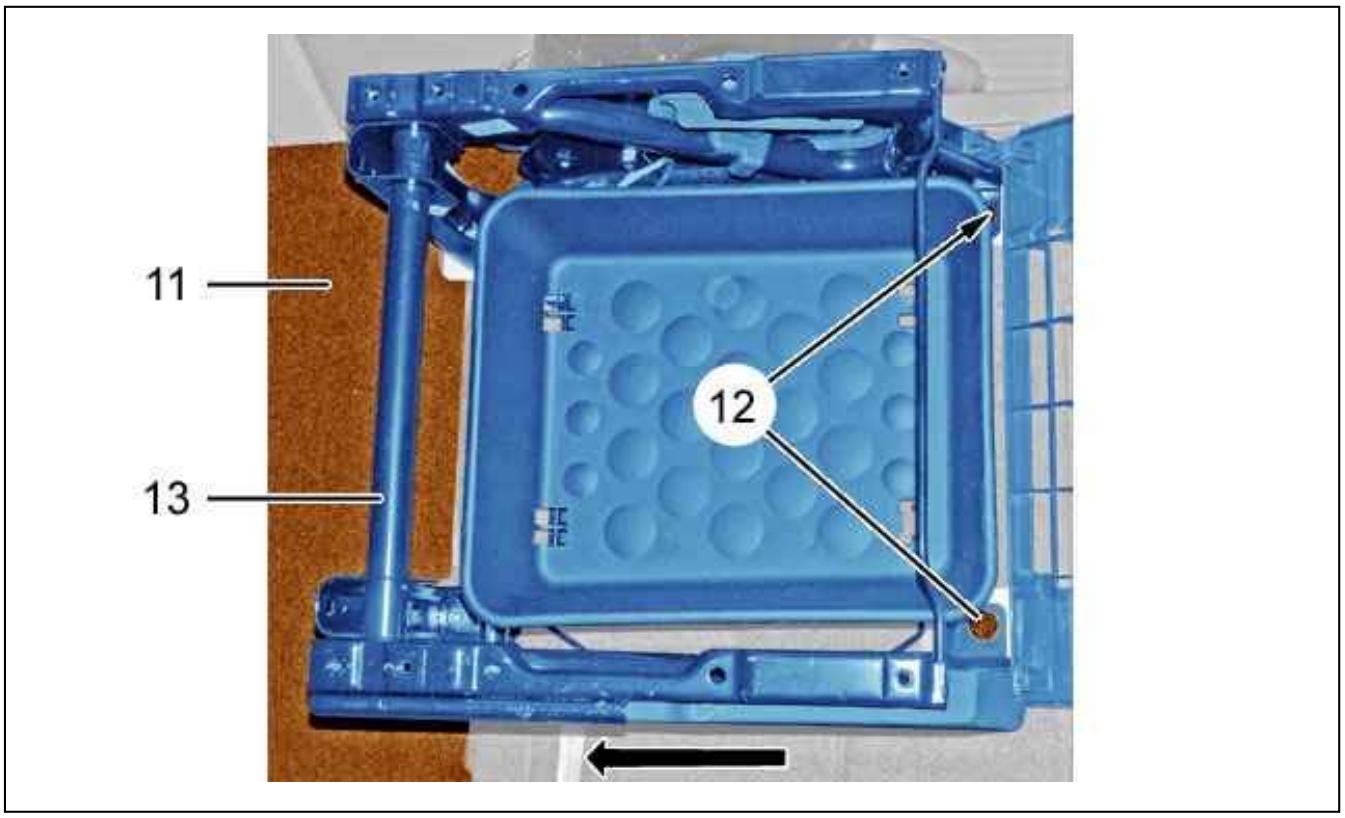

Figure : C5GG1GXD

Remove the bolts (12).
Detach :

- The carpet (11)
- The seat fixings support (13) (following the arrow)

Remove the seat fixings support (13) (front).

3. Refitting

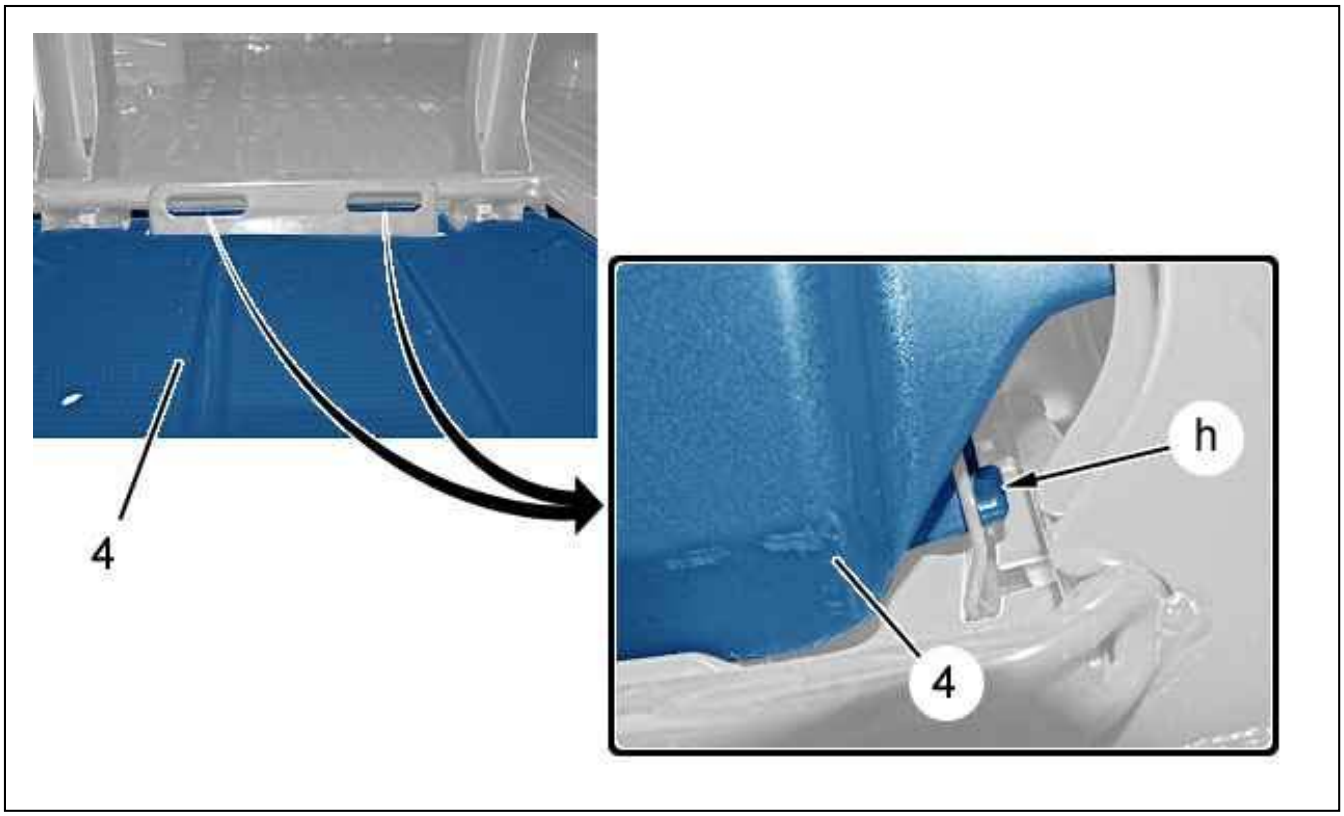

Figure : C5GG1GYD

Check the positioning (at "h") of the storage box (4).

ESSENTIAL : Replace the harness securing tie-straps.

Proceed in the reverse order to removal.
Apply thread lock to the bolts (1), (2), (8), (12).
Tighten :

- The bolts (1), (2), (8) to 2,4 da.Nm
- The bolts (12) to 4,2 da.Nm

CAUTION : Perform the operations that are required following a reconnection of the ancillaries battery.

Reconnect the ancillaries battery.
Check the electrical operation of the equipment.

REPAIR : SEAT TRIM

ESSENTIAL : Observe the safety and cleanliness recommendations .

CAUTION : Follow the user instructions in the seat trim repair kit.

1. Tooling

Seat trim repair kit.

2. Preparing the zone to be repaired

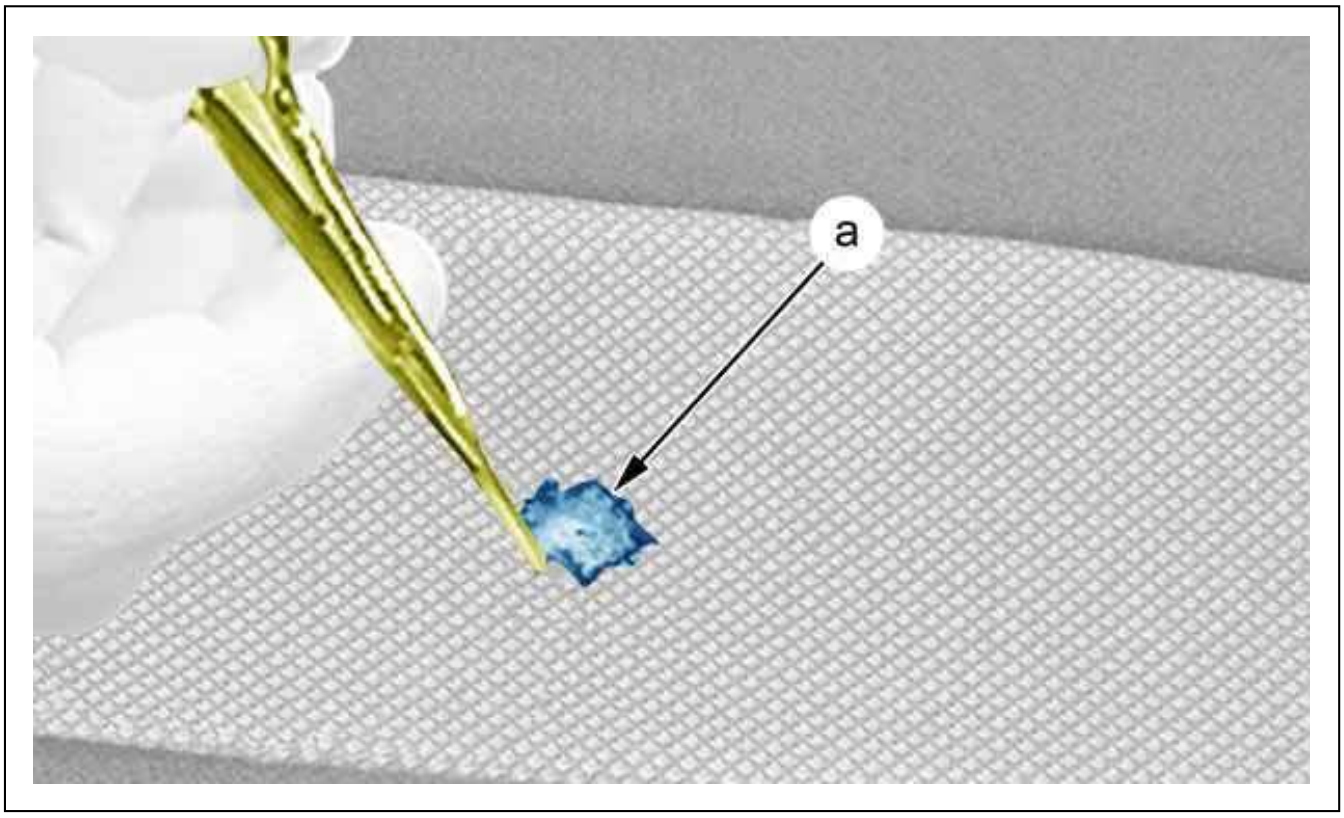

Figure : C5GM1EQD

Cut the edges of the hole to be repaired cleanly (at "a") ; Using a pair of scissors.

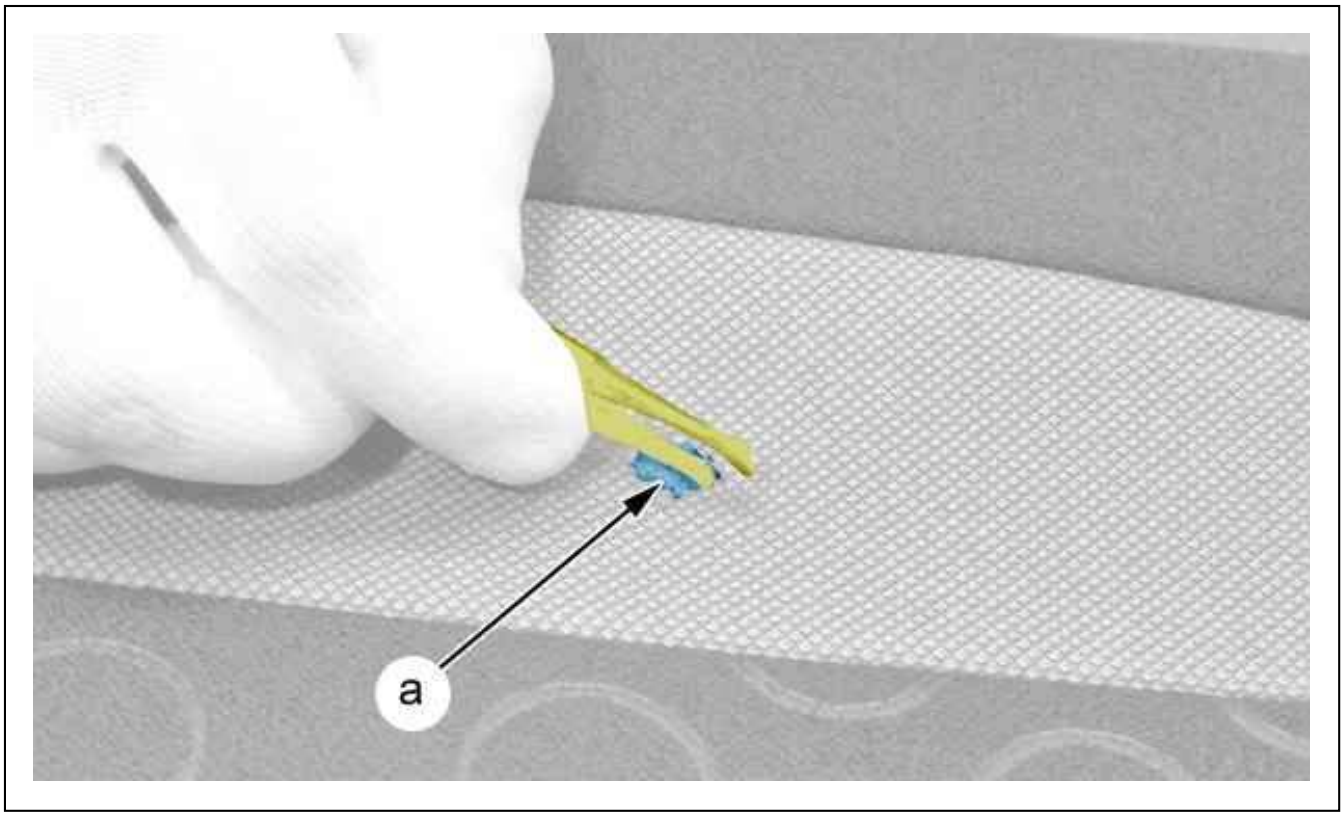

Figure : C5GM1DYD

N.B. : If the hole "a" is deep, fill it with foam.

Separate the fabric from the foam (Approx. 10 mm around the hole "a") ; Using pliers (Tweezers).

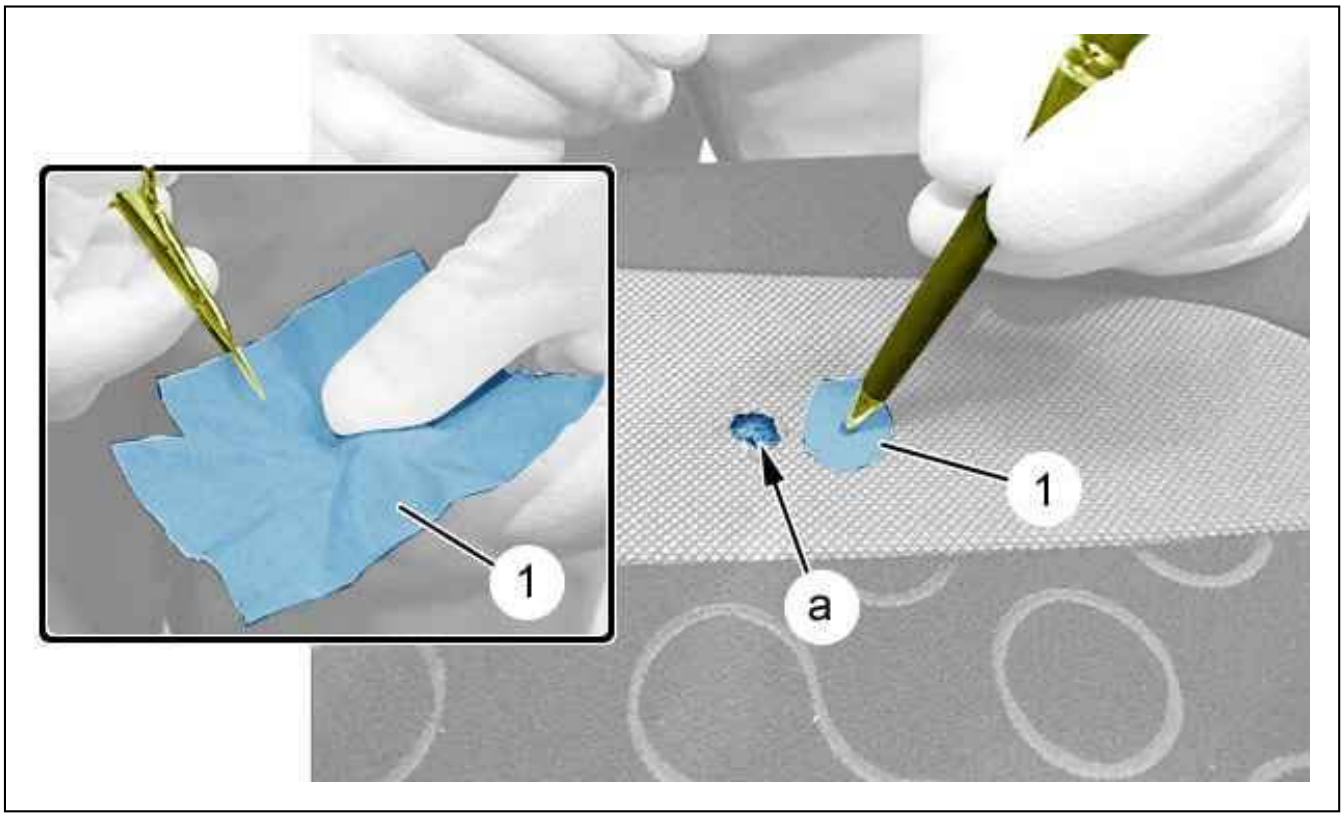

Figure : C5GM1E1D

Cut a piece out of the backing fabric (1), somewhat bigger than the hole "a" to be repaired.
Make a mark in the centre of the piece of backing fabric (1).

CAUTION : The mark must be at the centre of the hole to enable you to position the fabric centrally.

Put the piece of backing fabric (1) in place.

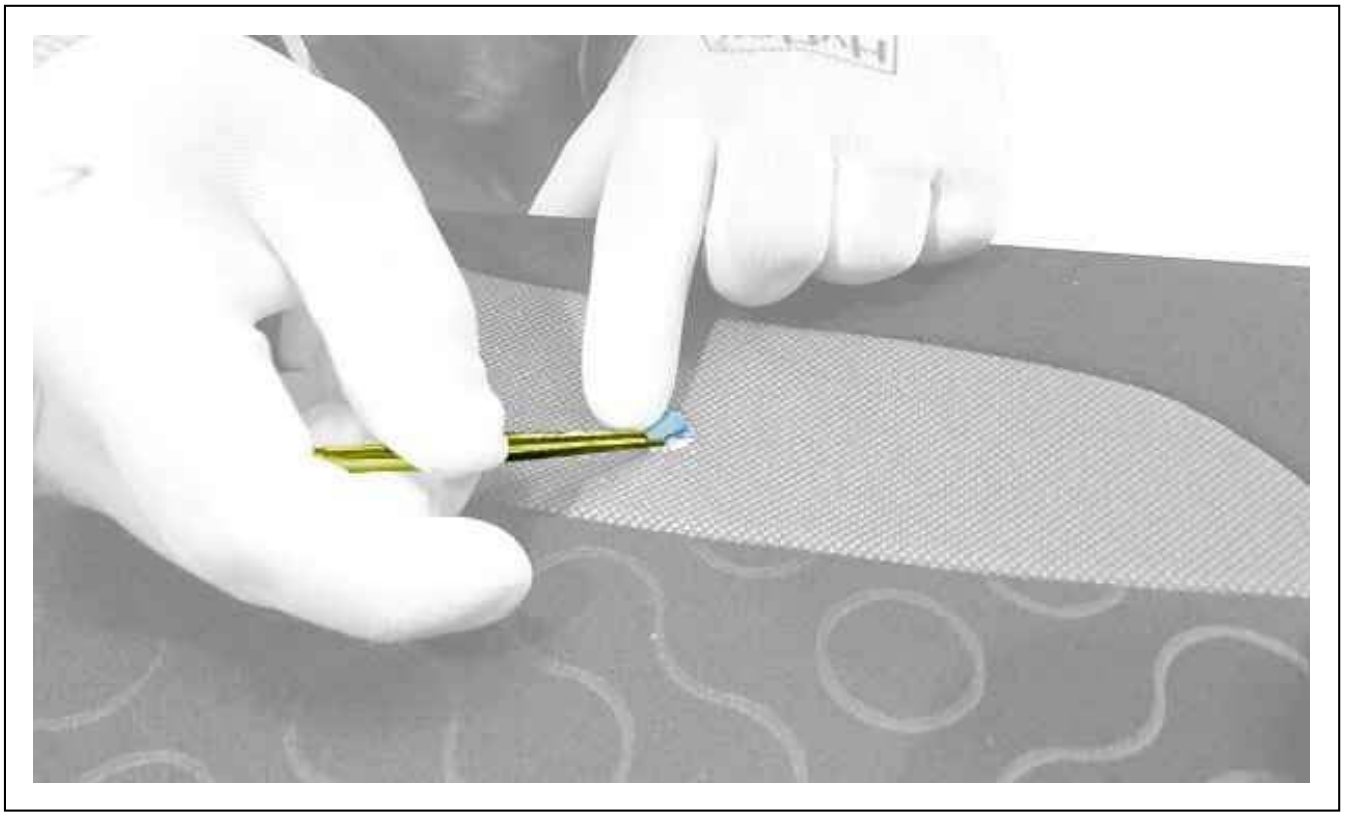

Figure : C5GM1E4D

Apply the backing fabric with the tweezers and hold it in position.

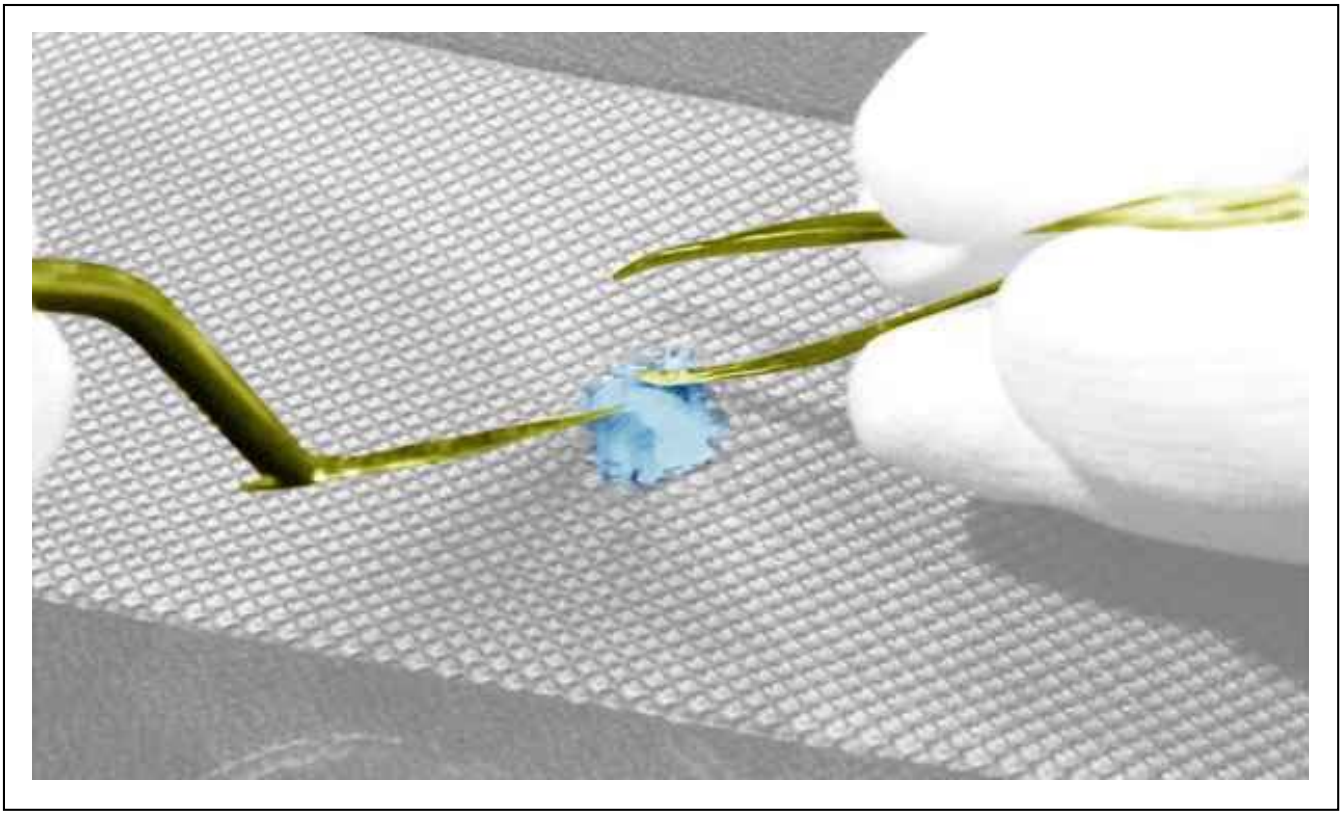

Figure : C5GM1E7D

With the spatula, take some powder adhesive.
Apply the adhesive on the edges only.



Figure : C5GM1EAD

N.B. : Prepare the smoothing iron to the temperature indicated by the supplier ; See instructions for use.

Remove the teflon and then use the smoothing iron to stick down the edges around the hole, taking the time indicated b the supplier.

CAUTION : Quickly inspect the repair after the initial heating to make sure that the adhesive is not drying around the hole.

3. Finding the colour

Find the colour that most approximates to the colour of the seat : Following the supplier's instructions.

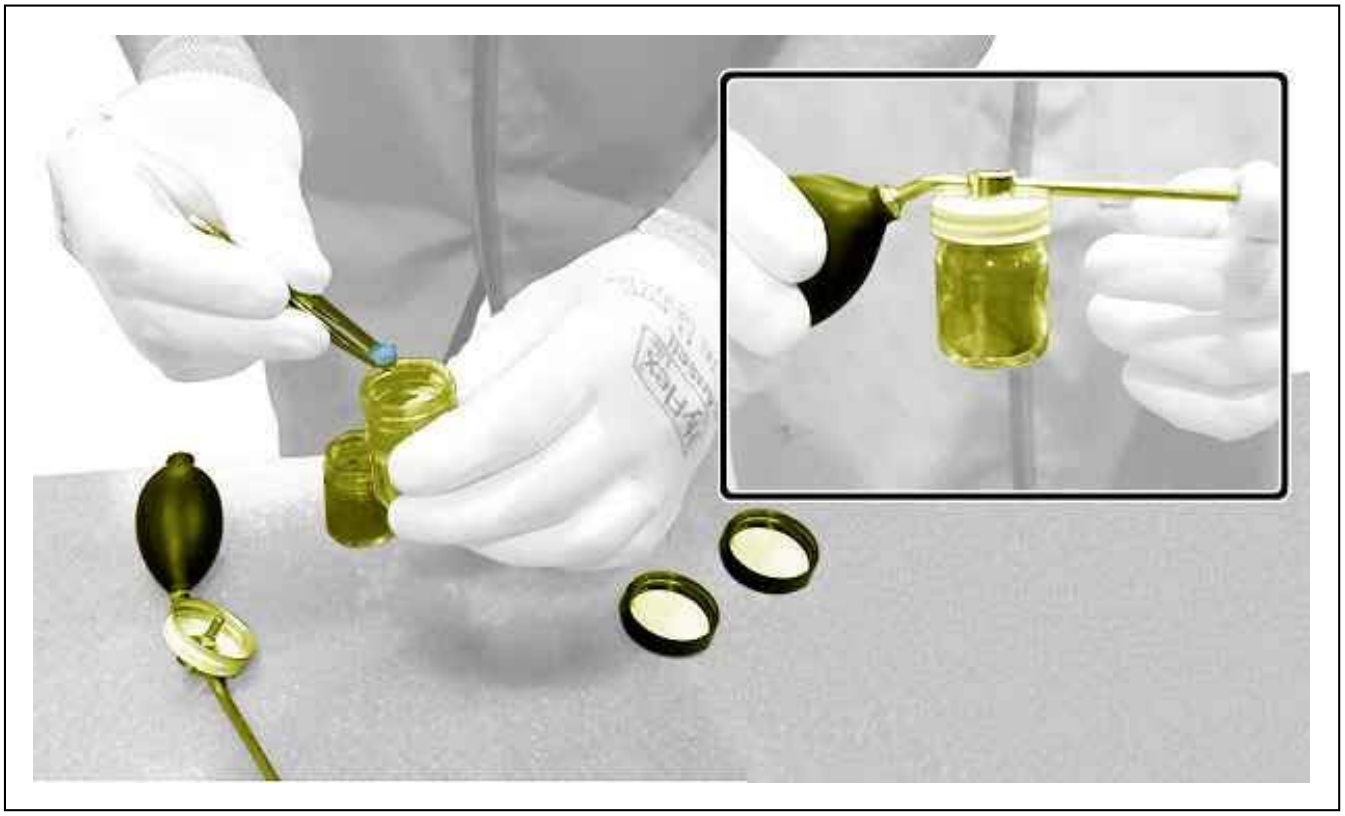

Figure : C5GM1EDD

Take the fibre from the pot corresponding to the material being repaired.
Place the fibre (or a mixture) in the fibre sprayer.

4. Applying the repair fibre

Apply the repair fibre : See instructions for use.

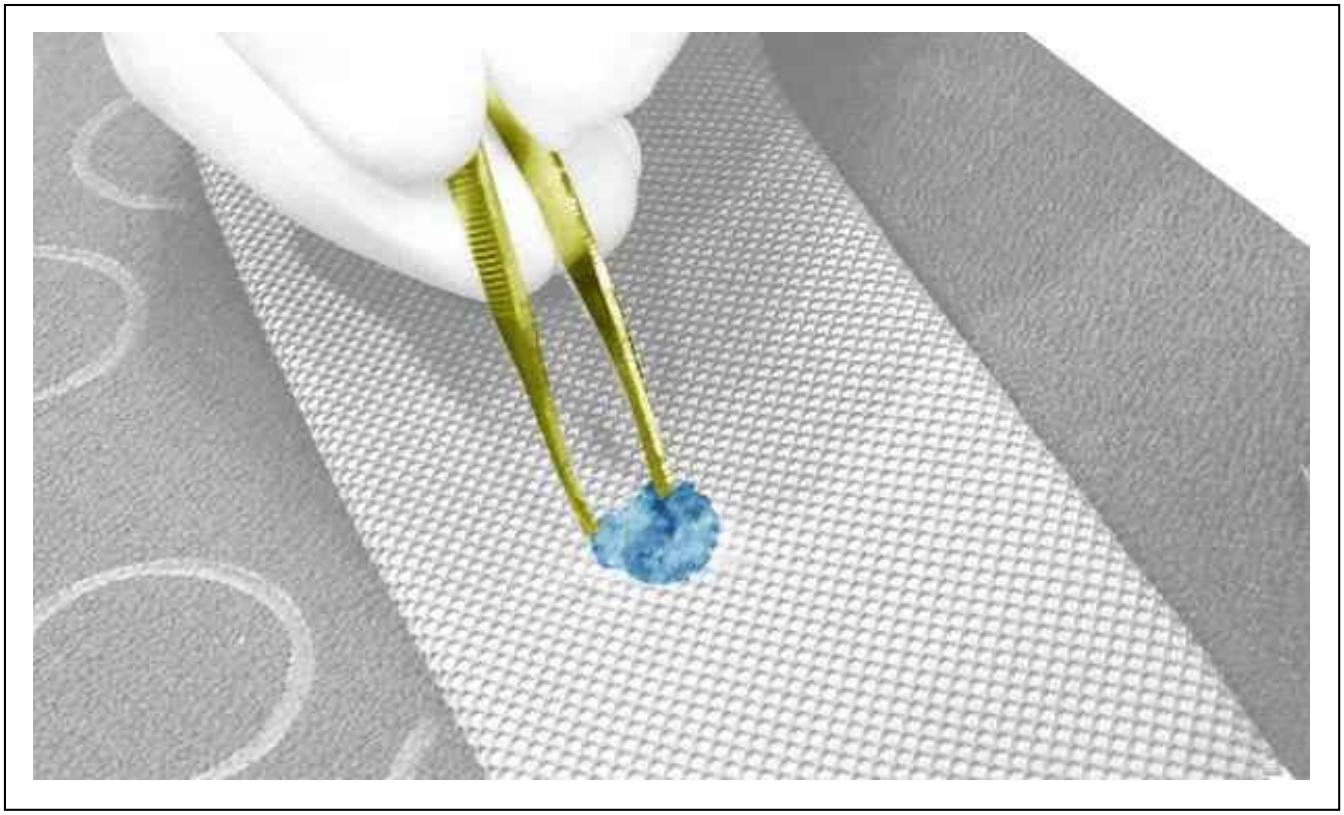

Figure : C5GM1EGD

Place a small quantity of powder adhesive in the hole.
Overlay the fibre uniformly, using the tweezers.

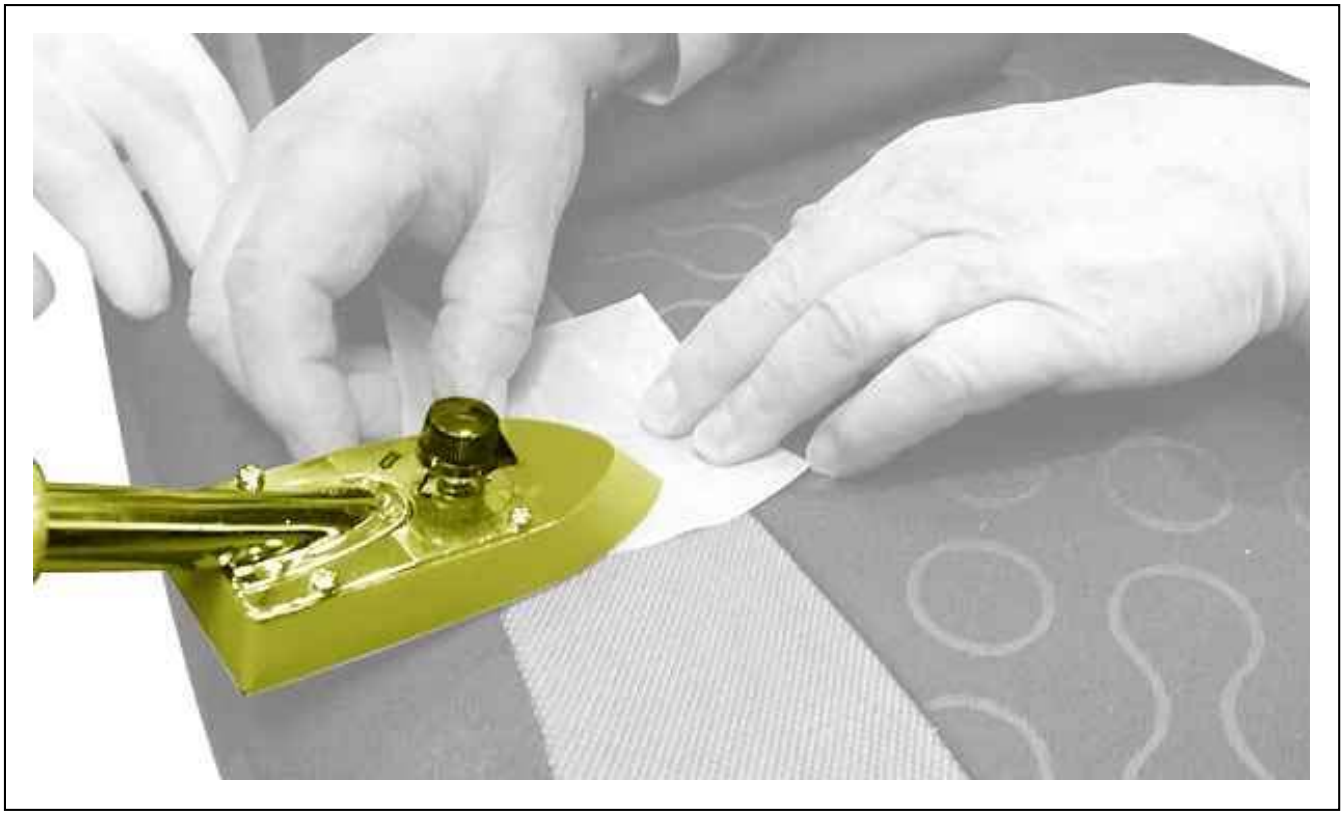

Figure : C5GM1EJD

Heat with the iron at index 2.5, protecting the hole with the sheet of teflon, for the duration indicated by the supplier ; Se

user instructions.

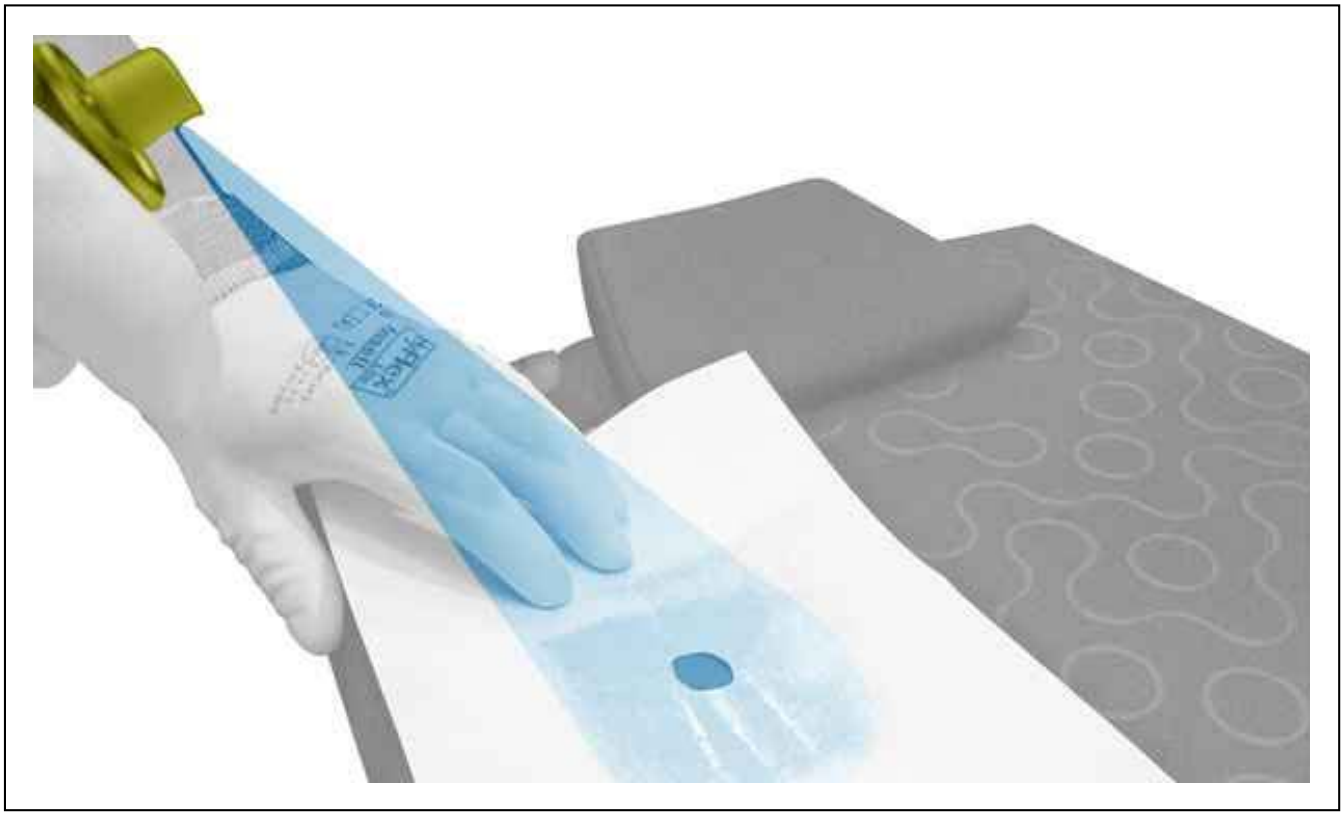

Figure : C5GM1EMD

Cut out a template the same size as the hole.
Spray the surface adhesive from the aerosol in short bursts.

5. Finish

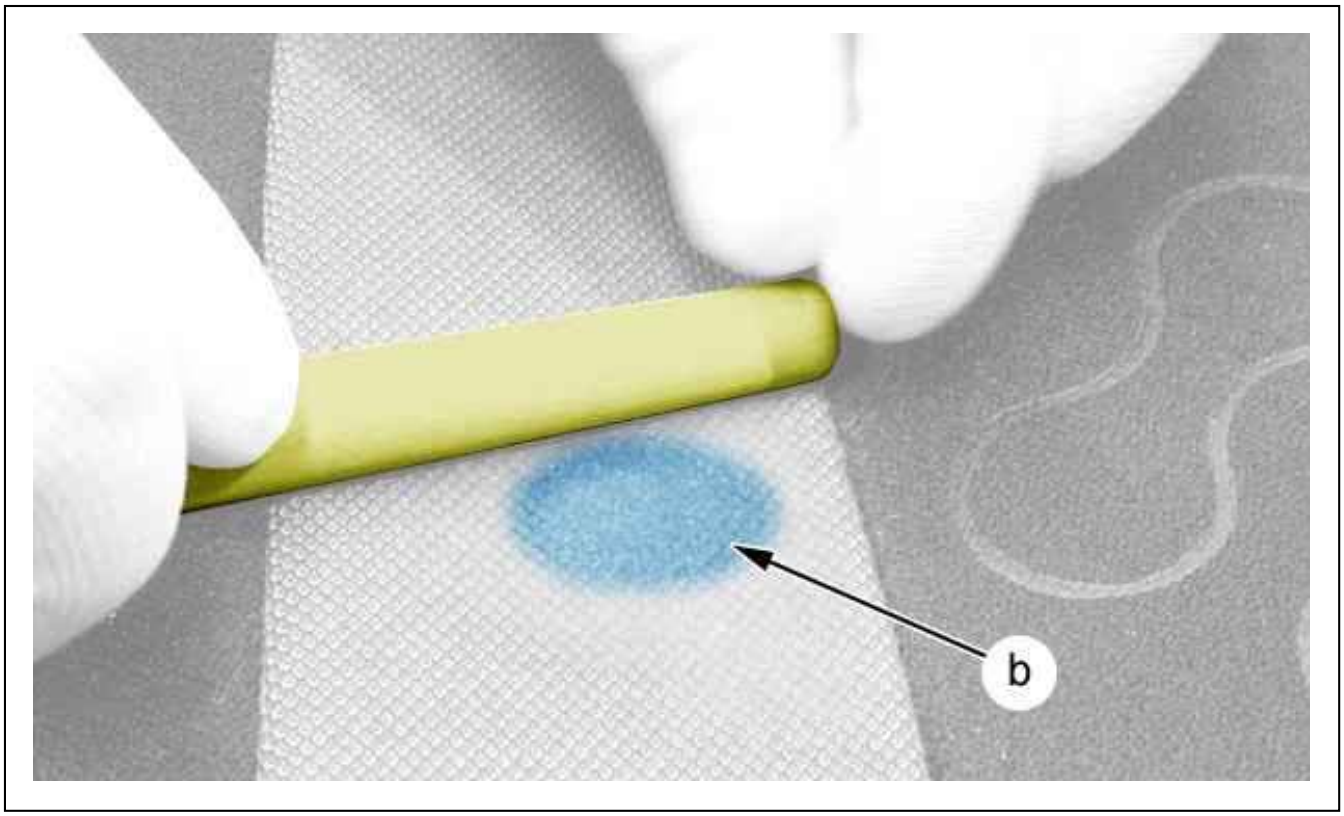

Figure : C5GM1EPD

Apply the finishing fibre with the sprayer (at "b") : See instructions for use.
Smooth out the area using the brush.

N.B. : You can reproduce the texture or the design by moistening the lead of a pencil (except for velours material).

REPAIR : SEAT TRIM (LEATHER)

ESSENTIAL : Observe the safety and cleanliness recommendations .

CAUTION : Follow the user instructions in the seat trim repair kit.

1. Tooling

Equipment : Seat trim repair kit.

2. Preparing the zone to be repaired



Figure : C5GM1ERD

Clean the zone to be repaired using the degreaser provided in the repair kit.

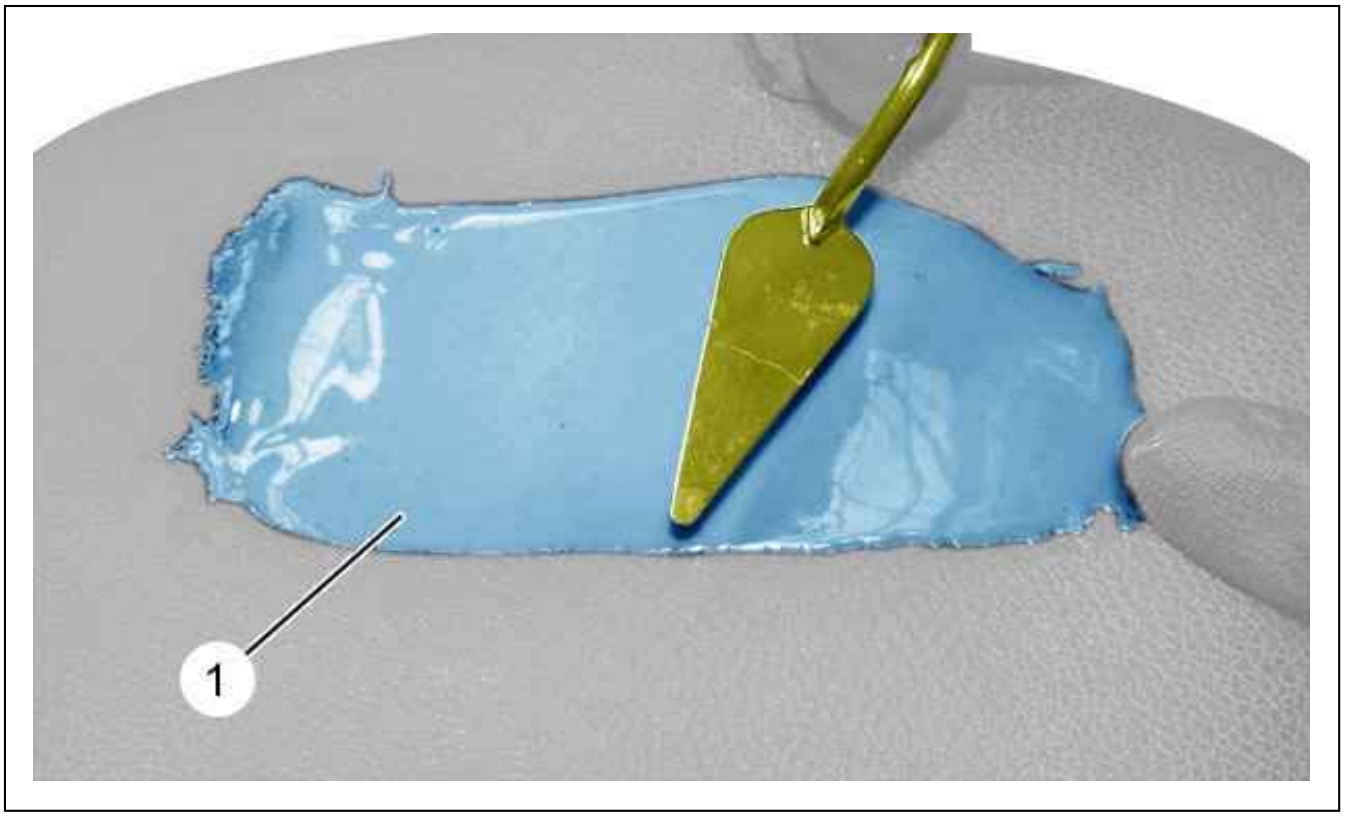

Figure : C5GM1EUD

Uniformly spread the product provided in the repair kit ; Using the adhesive knife.
Allow to dry for 20 minutes or accelerate the drying using a heat source.
Take away the moulding (1).

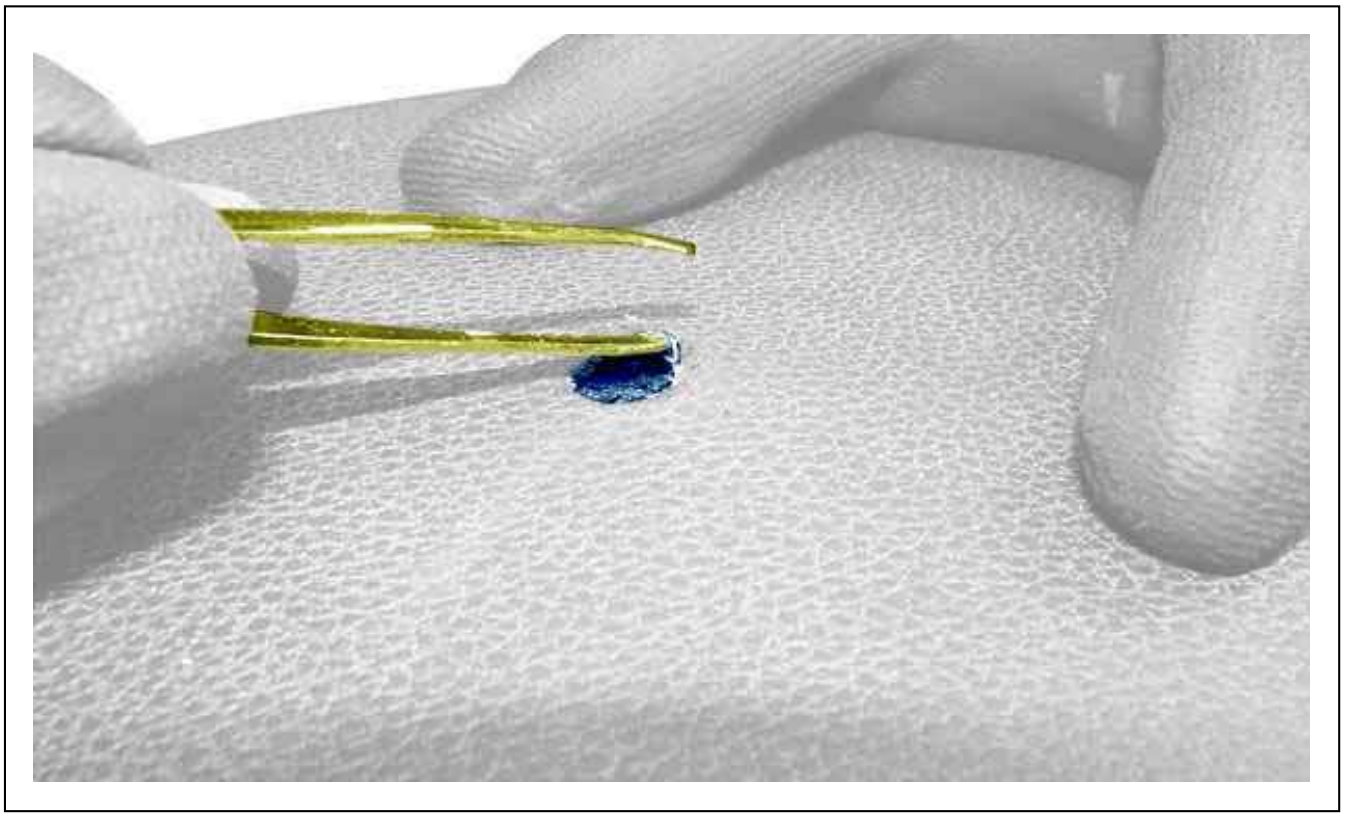

Figure : C5GM1EXD

Degrease using the degreaser included in the repair kit.
Allow to dry.
Trim the edges of the hole ; Using scissors.
Use the tweezers to separate the leather from the foam.

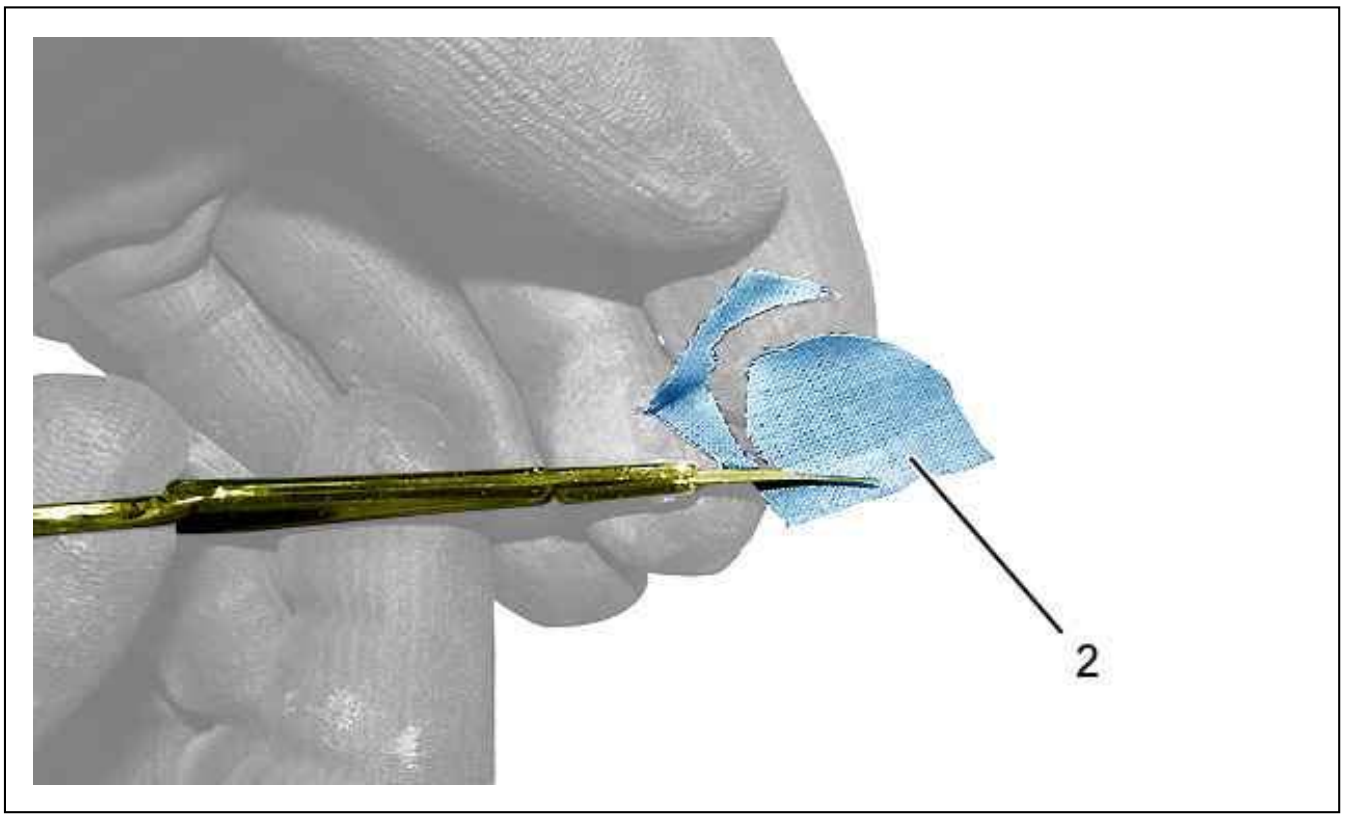

Figure : C5GM1F0D

Cut the piece of backing fabric (2) into a rounded overlapping shape.

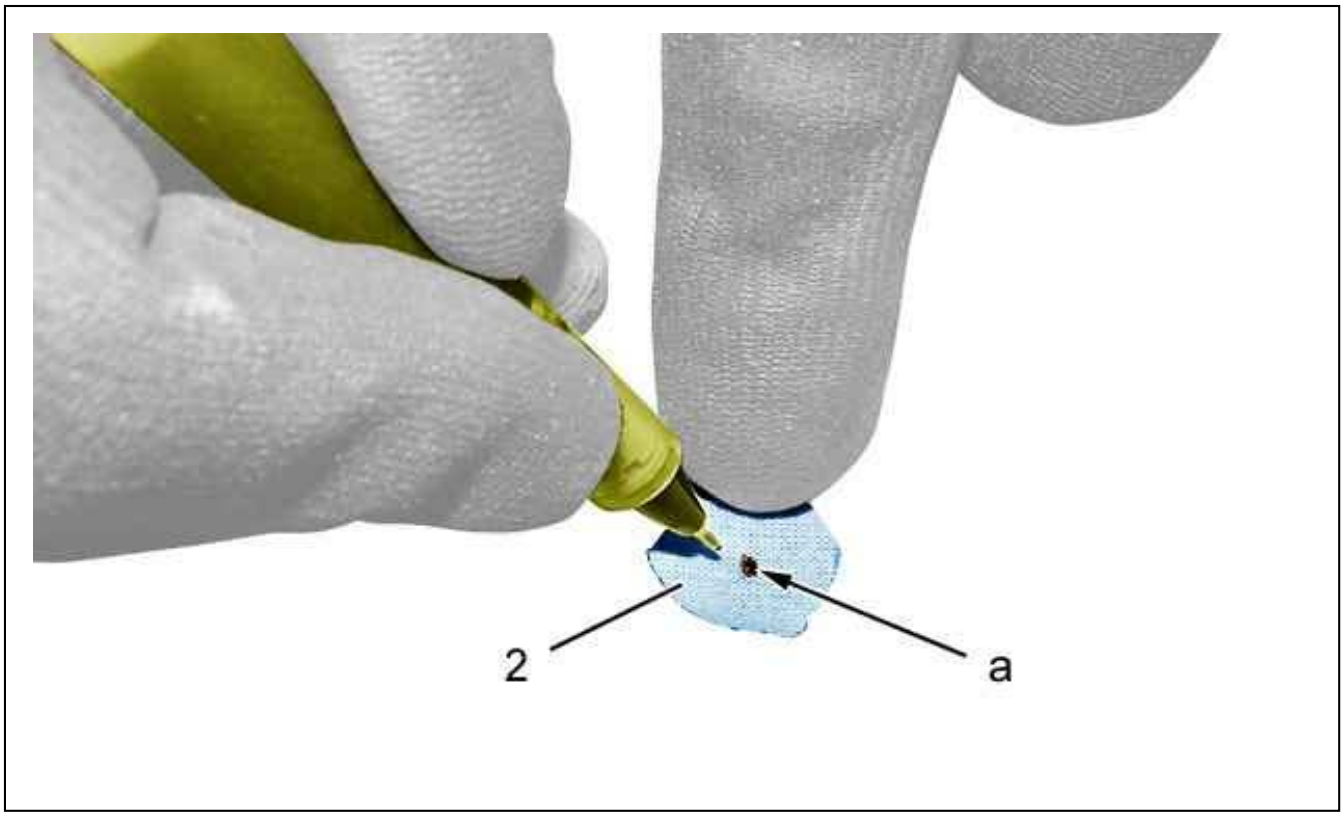

Figure : C5GM1F3D

Make a mark in the centre of the piece of backing fabric (2) (at "a").

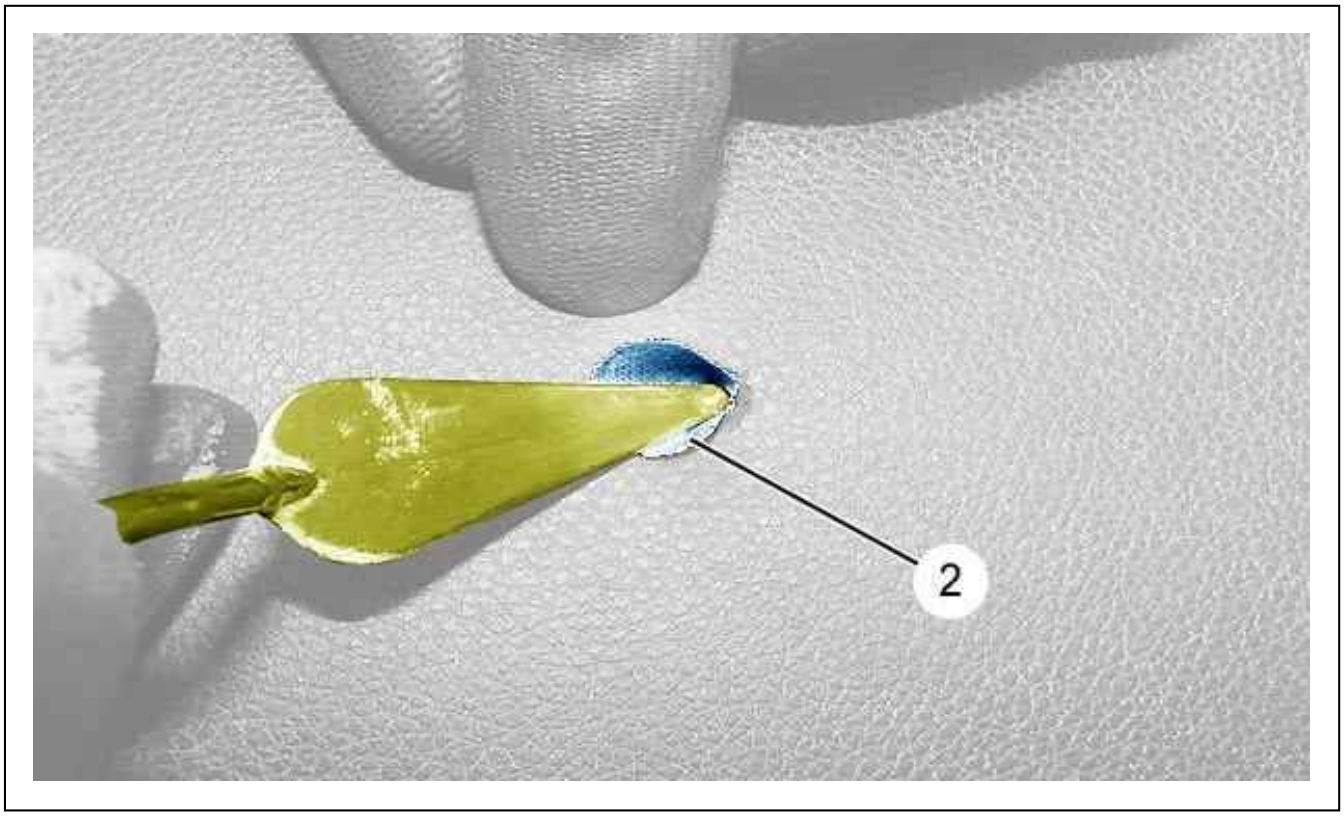

Figure : C5GM1F6D

N.B. : Make sure that the mark on the backing fabric is at the centre of the hole (Make sure that the fabric is extended flat underneath the leather).

Put the piece of backing fabric (2) in place ; Using either the tweezers or the adhesive knife.

3. Applying the liquid leather

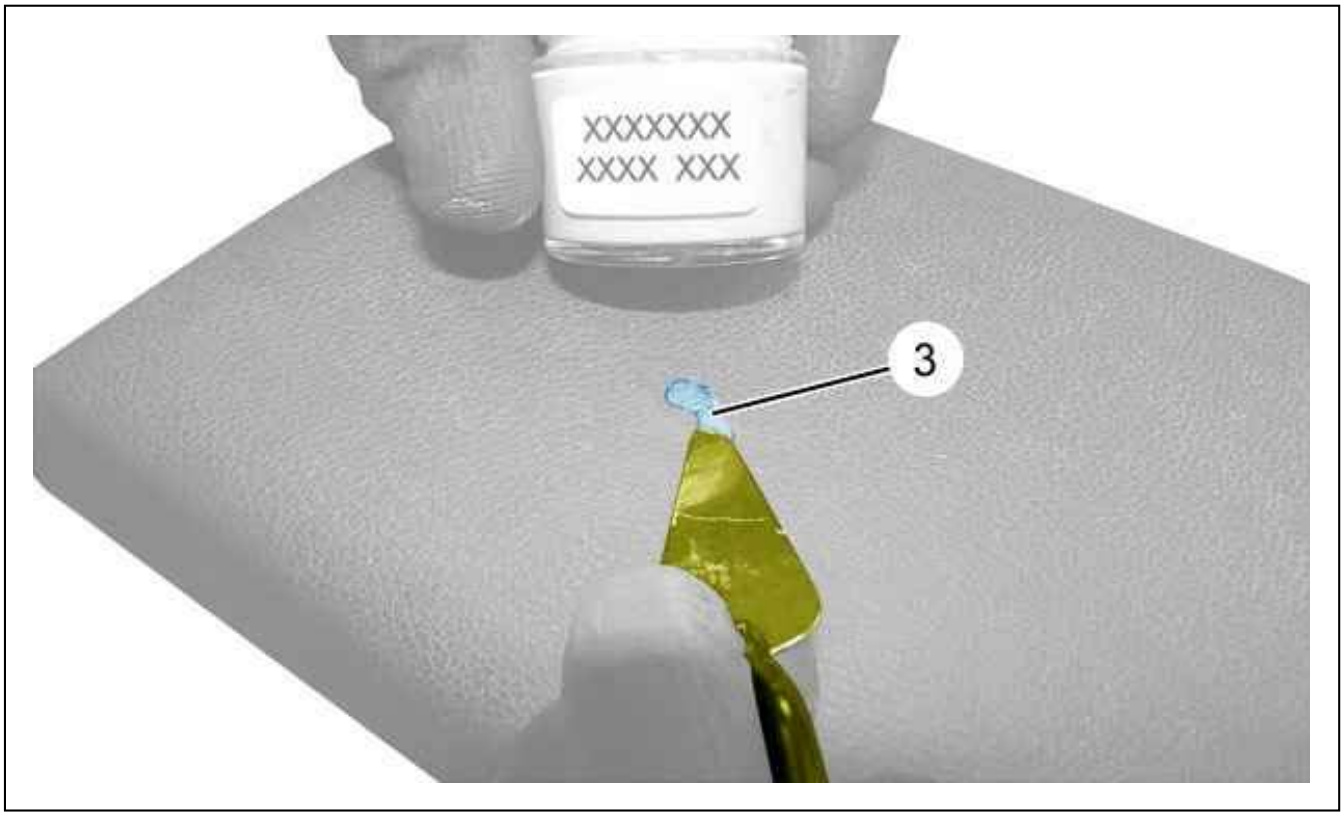

Figure : C5GM1F9D

Apply the liquid leather (3) between the leather and the backing fabric.

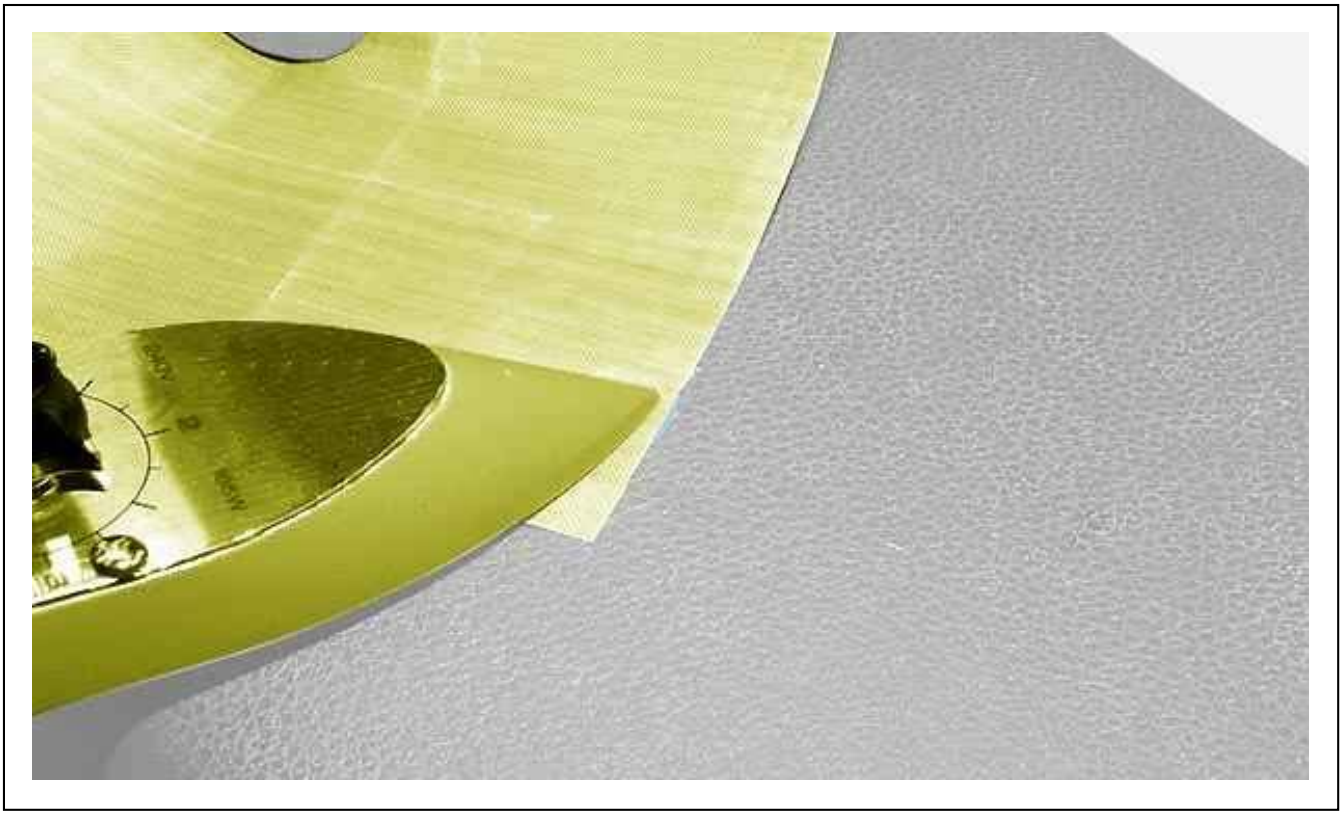

Figure : C5GM1FCD

Pre-heat the iron to position 2,5.
Use the teflon sheet provided, to go between the leather and the iron.
Use the heat to make the liquid leather stick to the backing fabric.

N.B. : Repeat the operation of applying liquid leather to make it flush with the hole.

Remove any excess of liquid leather on the outer surface.

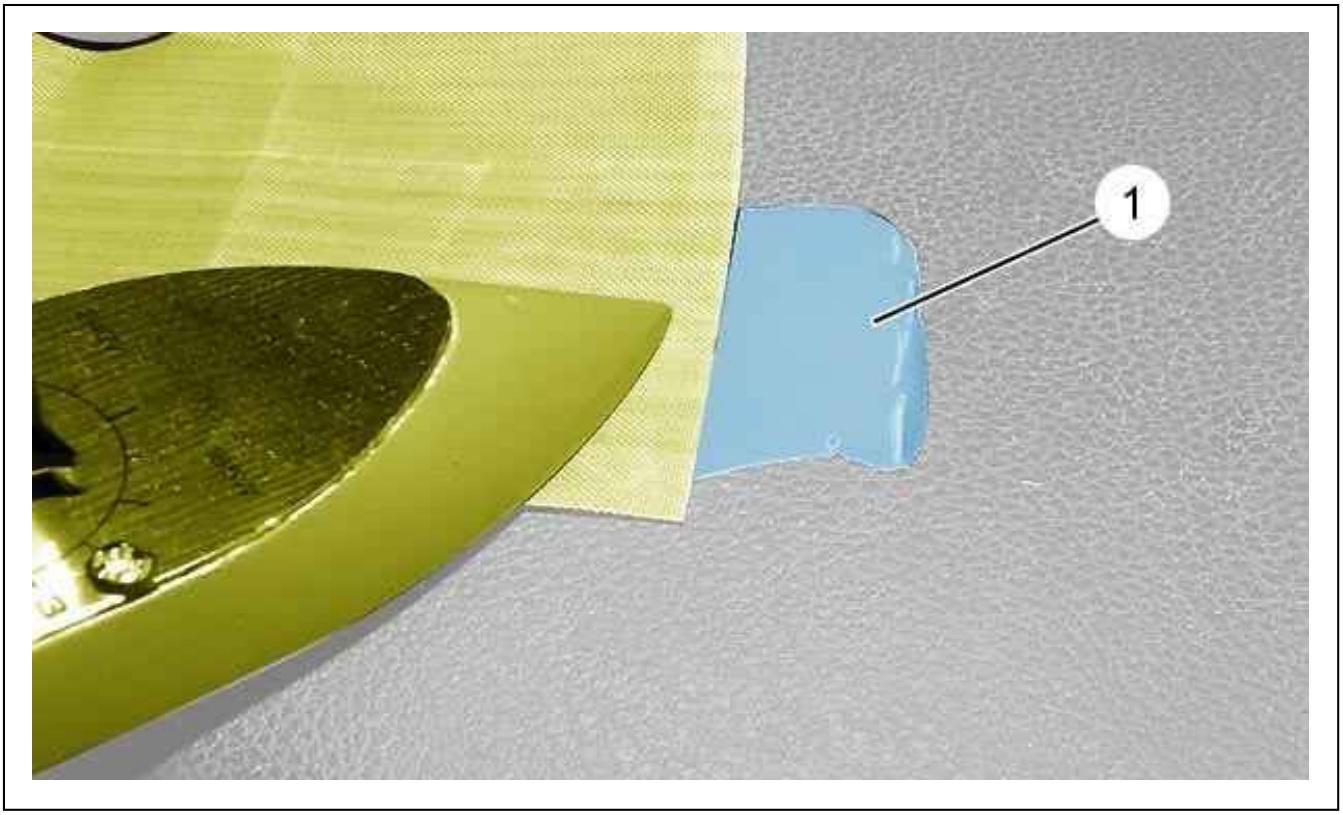

Figure : C5GM1FFD

Take the moulding (1) and place it over the hole filled with the liquid leather.

N.B. : Press gently so that it sticks.

Apply heat to the area with the iron on position 2,5.
Take away the moulding (1).

4. Preparation / Application / paint

Apply the repair mastic for a better finish (using fresh air to dry it) (see operating instructions).
Carefully smooth with an abrasive pad to spread the porosity.

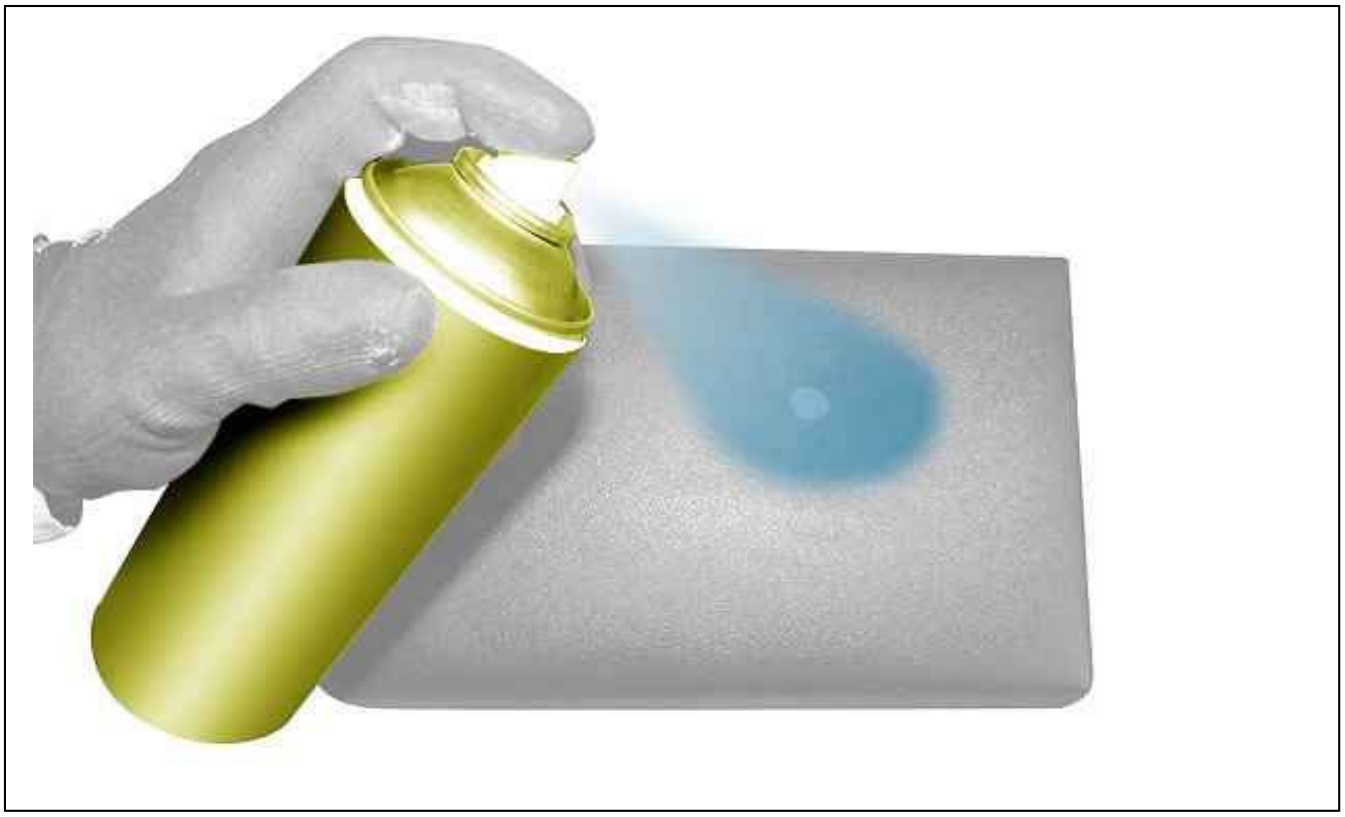

Figure : C5GM1FID

Apply a thin coating of primer (see operating instructions).
Leave to dry for 10 minutes (approx.).

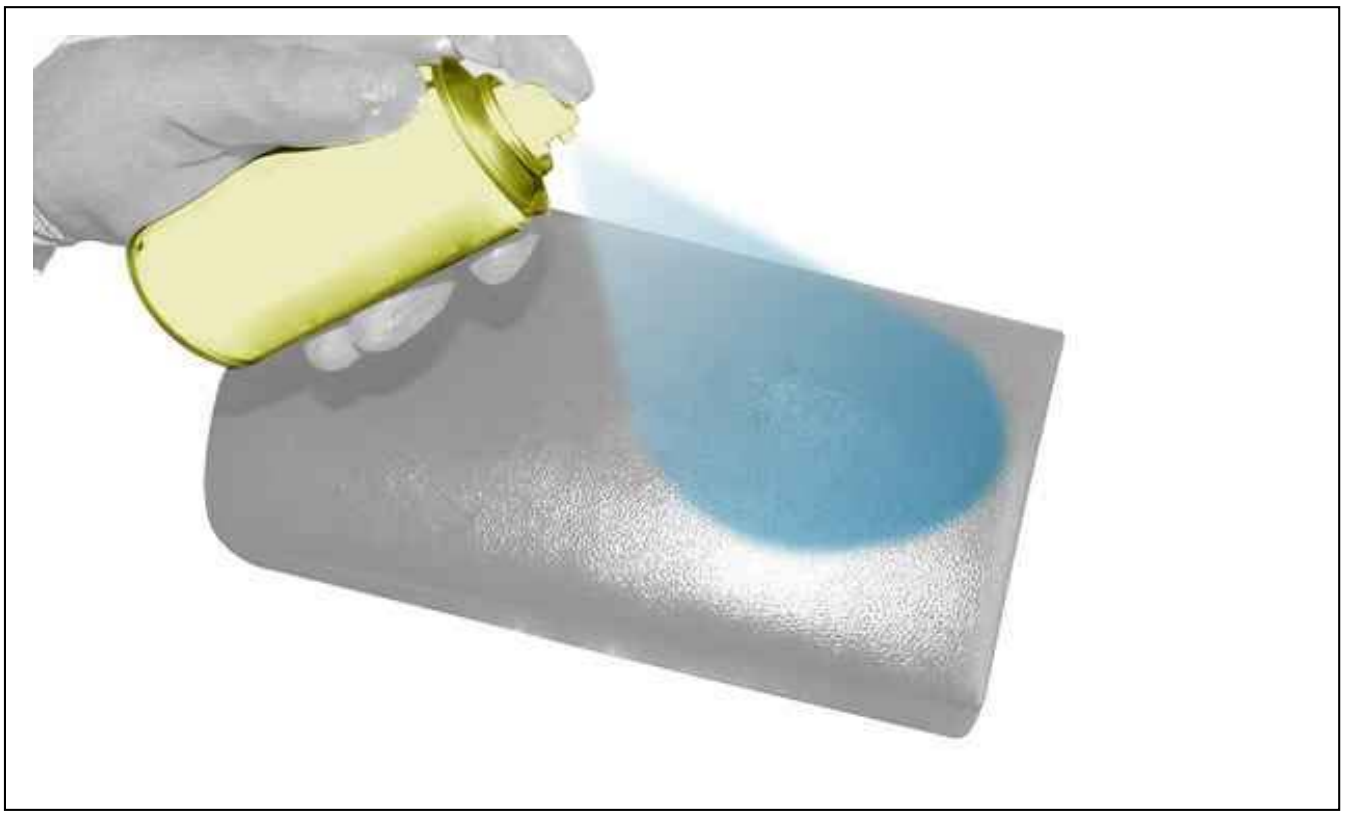

Figure : C5GM1FLD

Apply the corresponding paint to the repaired zone (see operating instructions).

Leave to dry for 10 minutes (approx.).

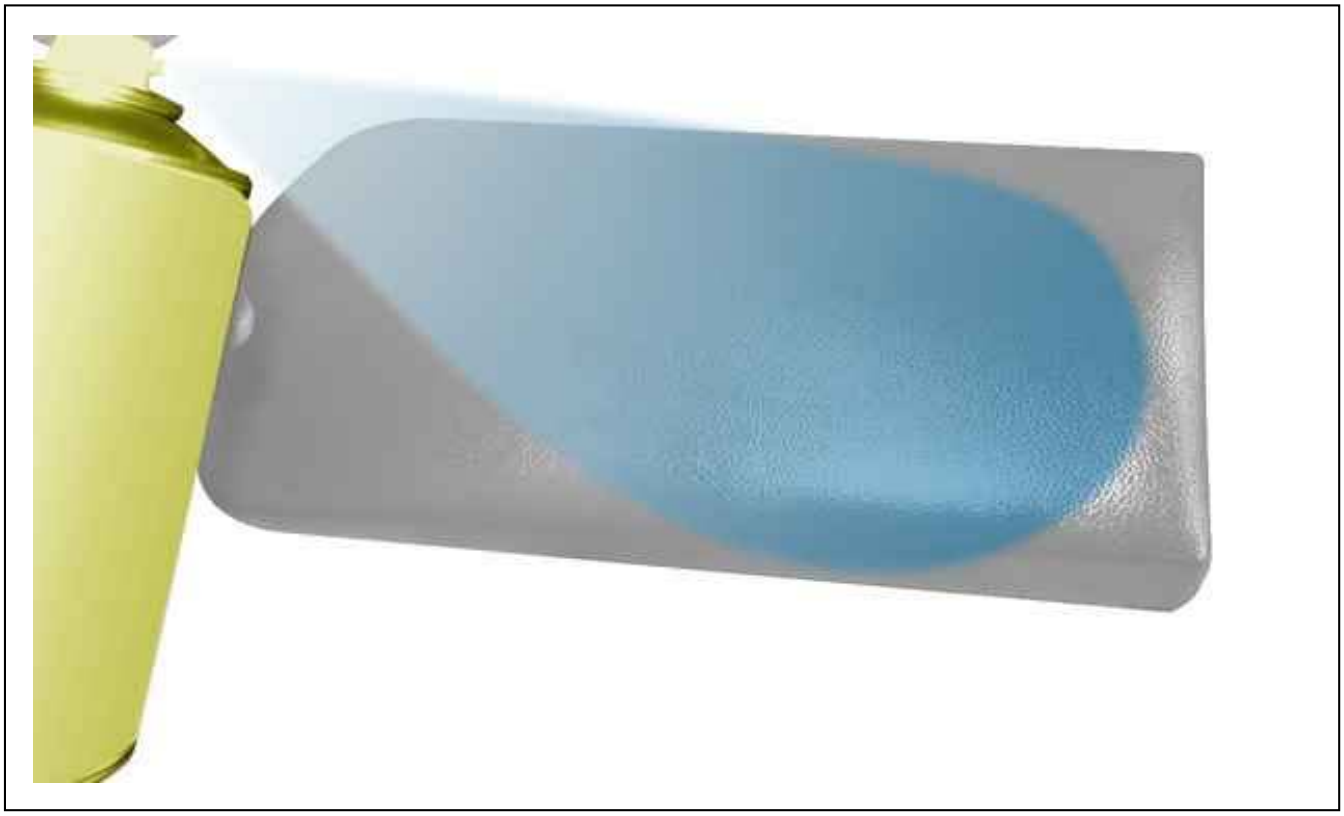

Figure : C5GM1FOD

N.B. : Repeat the following in two stages.

Apply the finishing gel (see operating instructions).
After the last application leave to dry for 30 minutes.

STRIPPING-ASSEMBLING : FRONT PASSENGER SEAT

1. Stripping

Remove the front passenger seat (see the relevant operation).

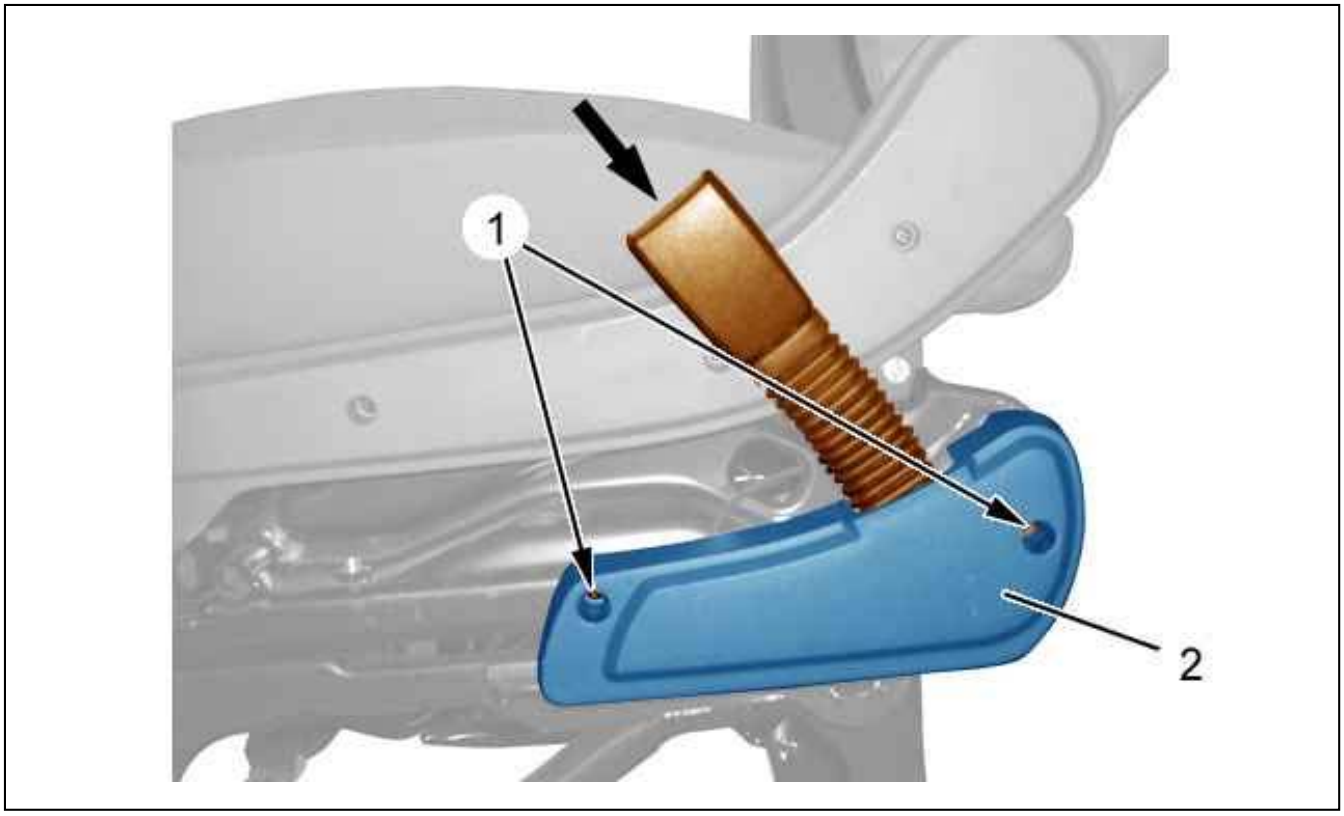

Figure : C5GP0N2D

Remove :

- The bolts (1)
- The seat LH trim (2)
- The seat belt stalk (see the relevant operation)

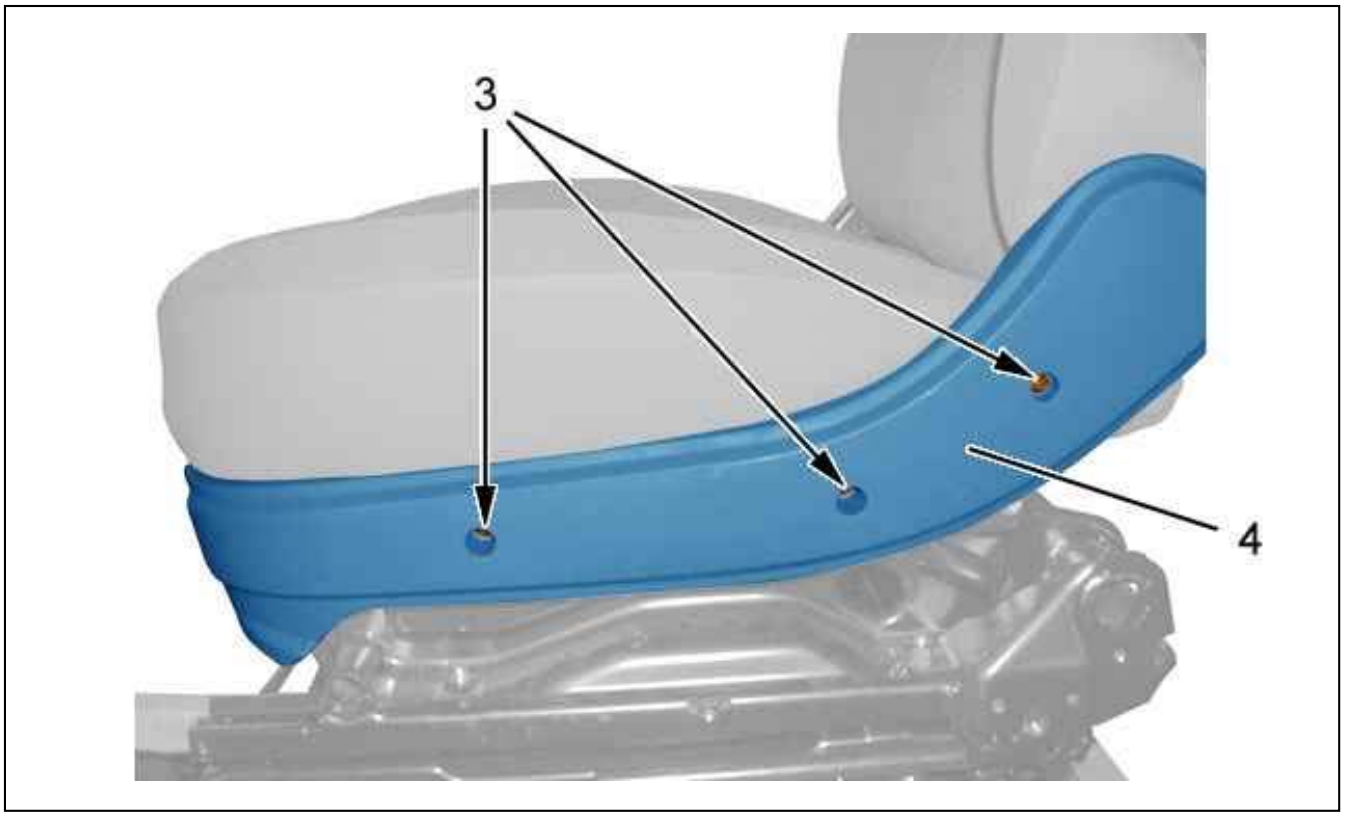

Figure : C5GP0N3D

Remove :

- The bolts (3)
- The seat LH trim (4)

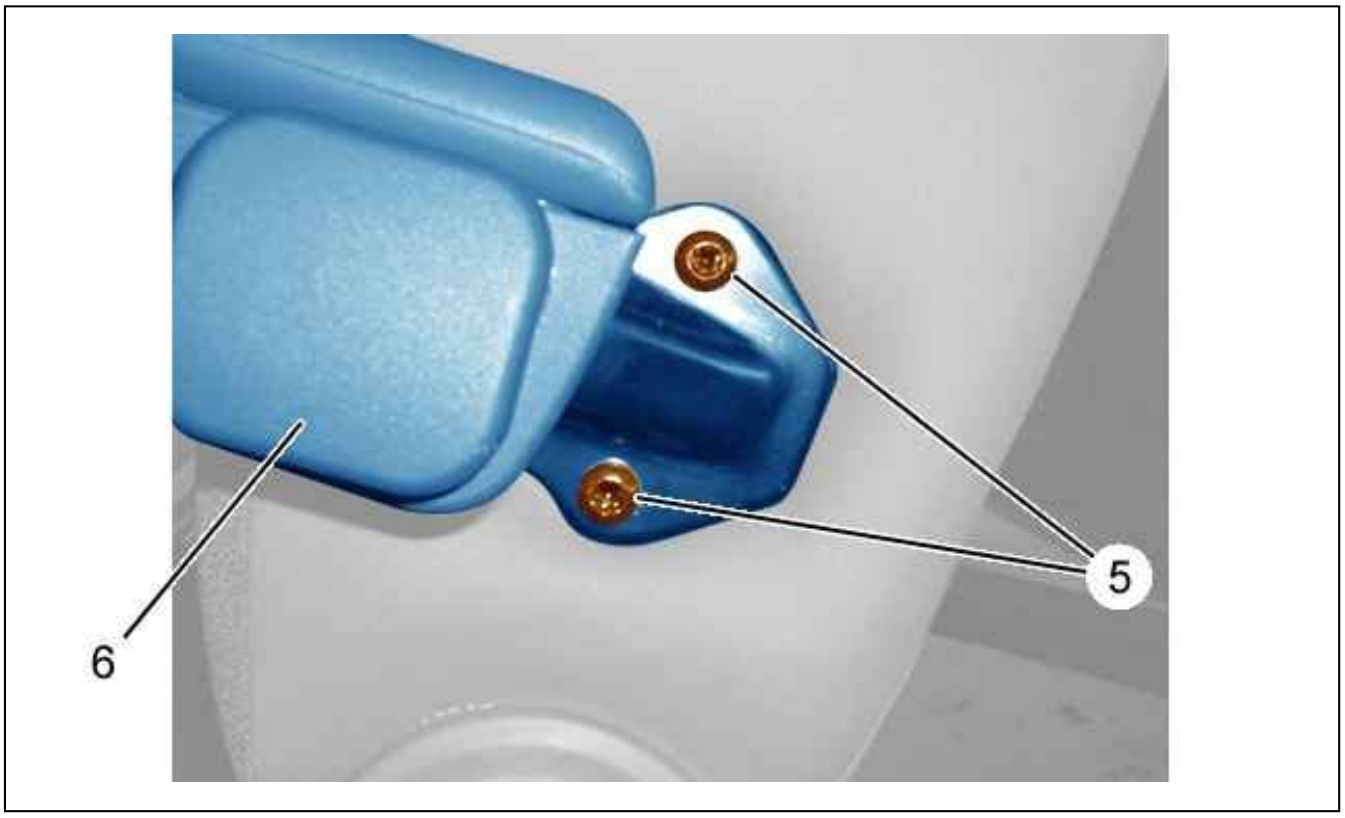

Figure : C5GP0N4D

Remove :

- The screws (5) of the armrest (6)
- Armrest (6)

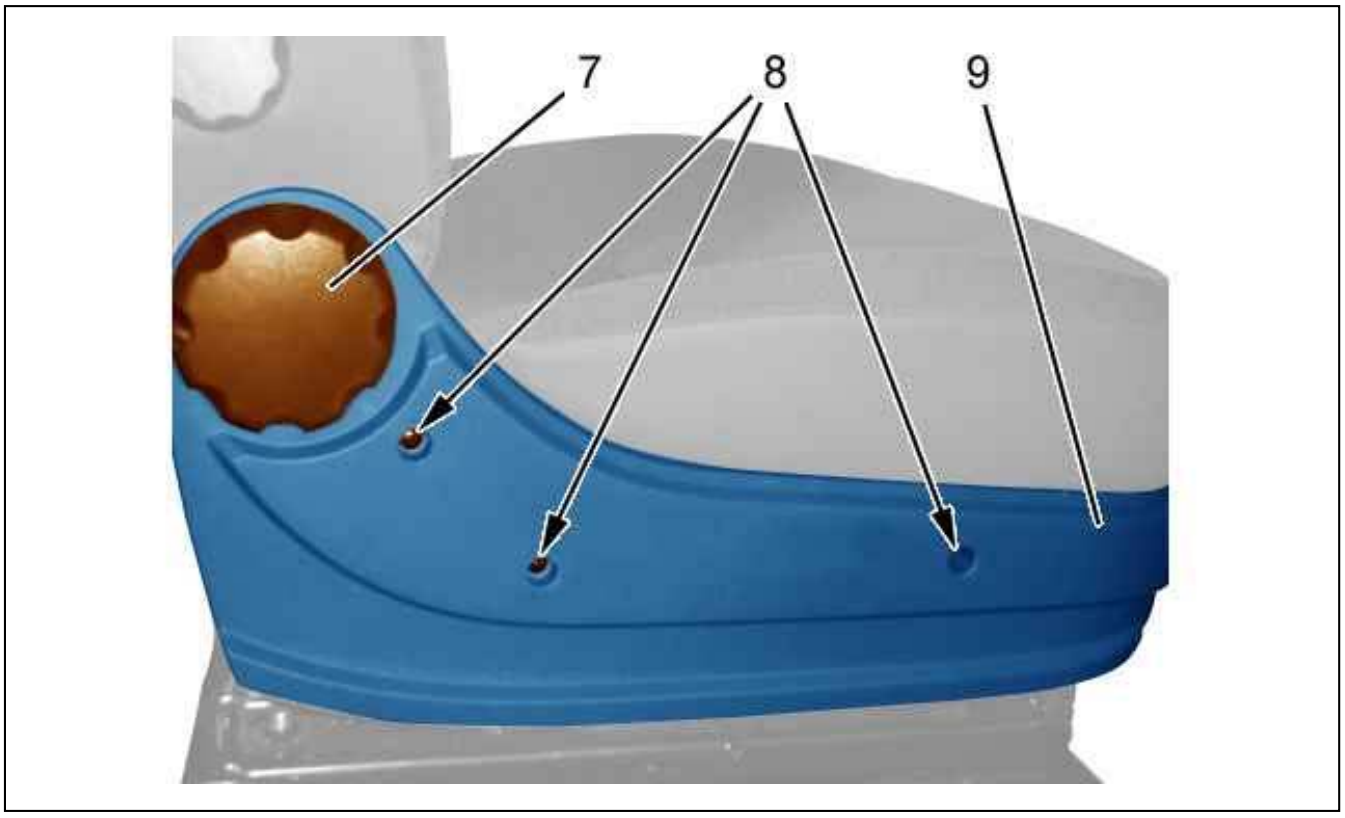

Figure : C5GP0N5D

Unclip the seat backrest adjustment control (7).

Remove :

- The seat backrest adjustment control (7)
- The bolts (8)
- The seat RH trim (9)

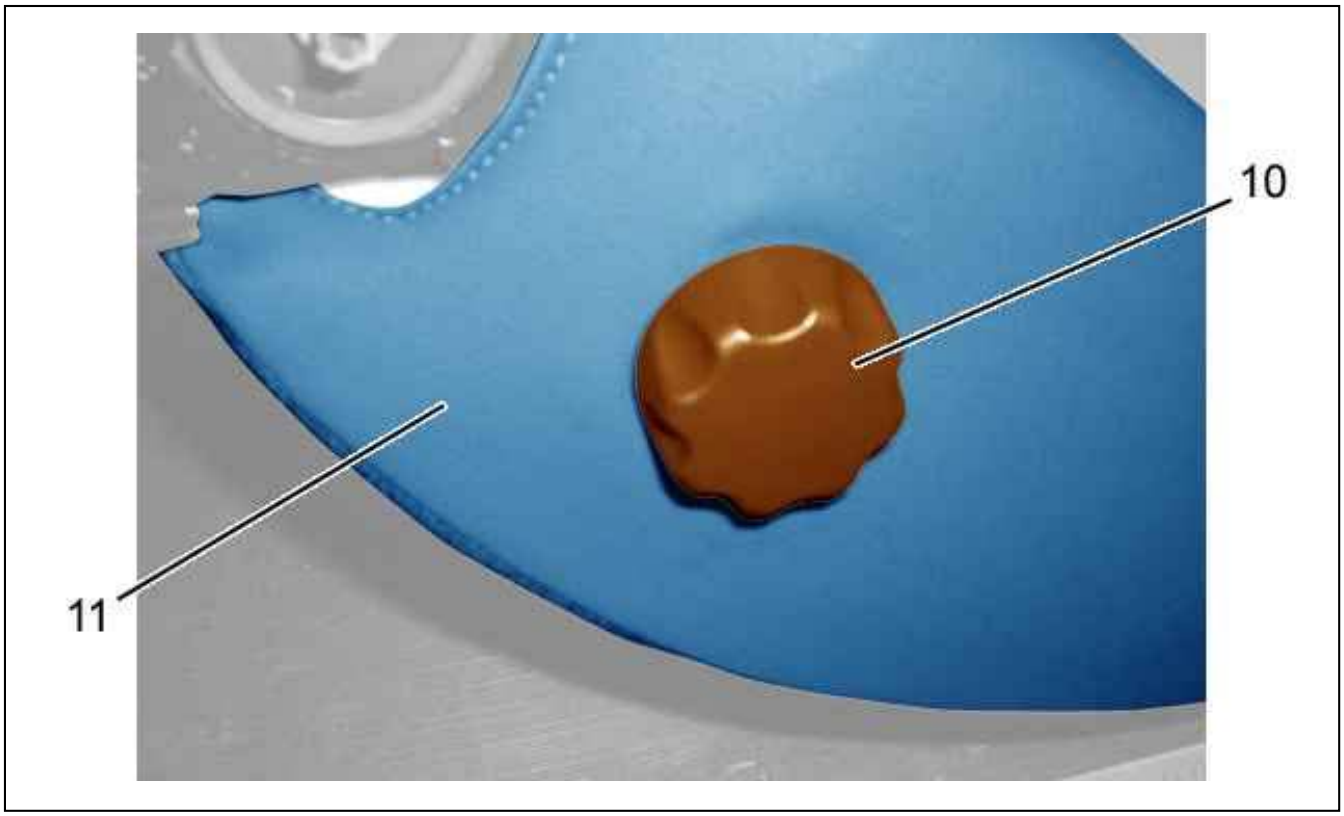

Figure : C5GP0N6D

Unclip the lumbar adjustment control (10) from the seat backrest (11).
Remove the lumbar adjustment control (10).

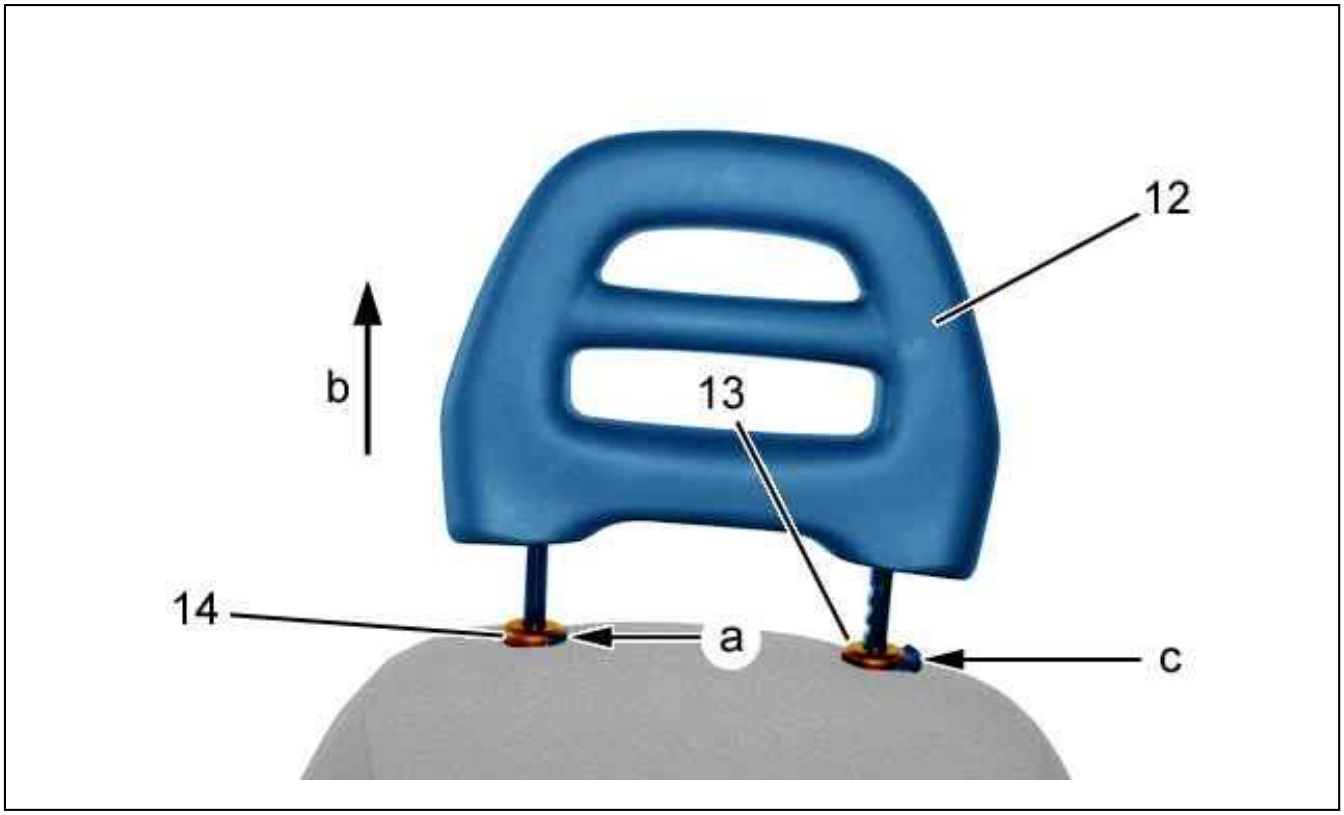

Figure : C5GP0N7D

Press on the head restraint guide (14) (in direction "a").

Partially disengage the head restraint (12) (in direction "b").
Press on the head restraint guide (13) (in direction "c").
Remove the head restraint (14) (in direction "b").

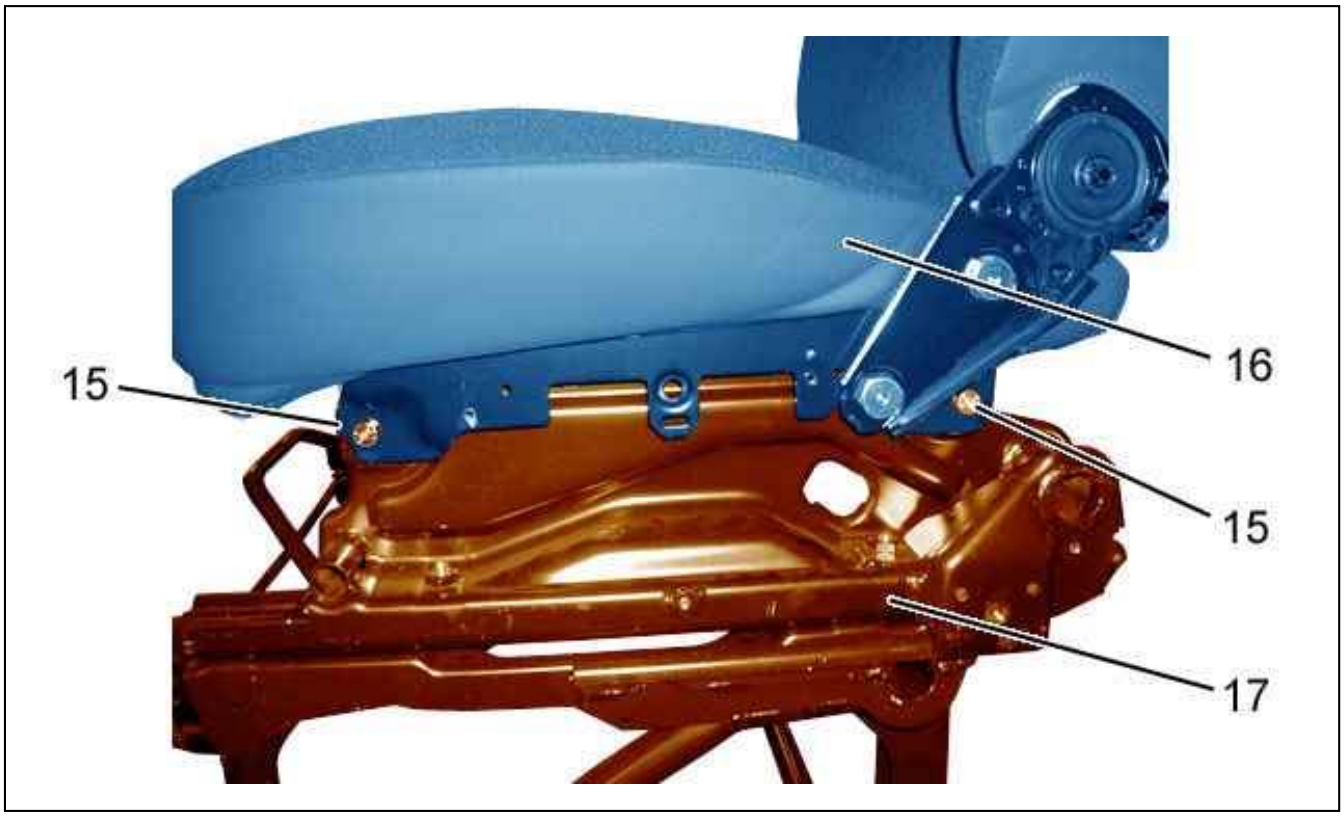

Figure : C5GP0N8D

Remove the bolts (15) (Repeat the operation on the opposite side).
Separate the seat (16) from the rail support (17).
Remove the seat (16).

1.1. Seat

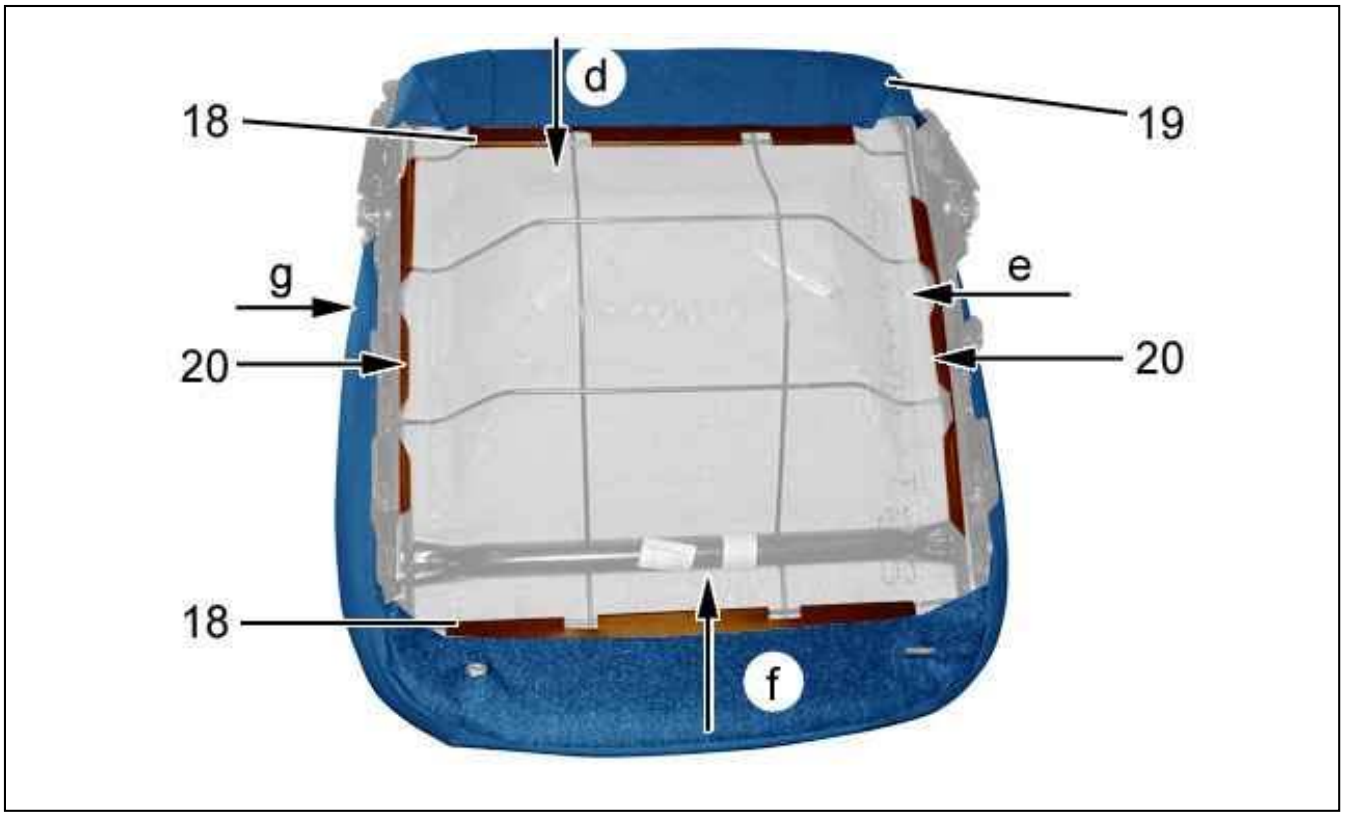

Figure : C5GP0N9D

Unclip :

- The closures (18) of the cushion cover (19) (in direction "d", "f")
- The closures (20) of the cushion cover (19) (in direction "e", "g")

Remove the cushion cover (19).

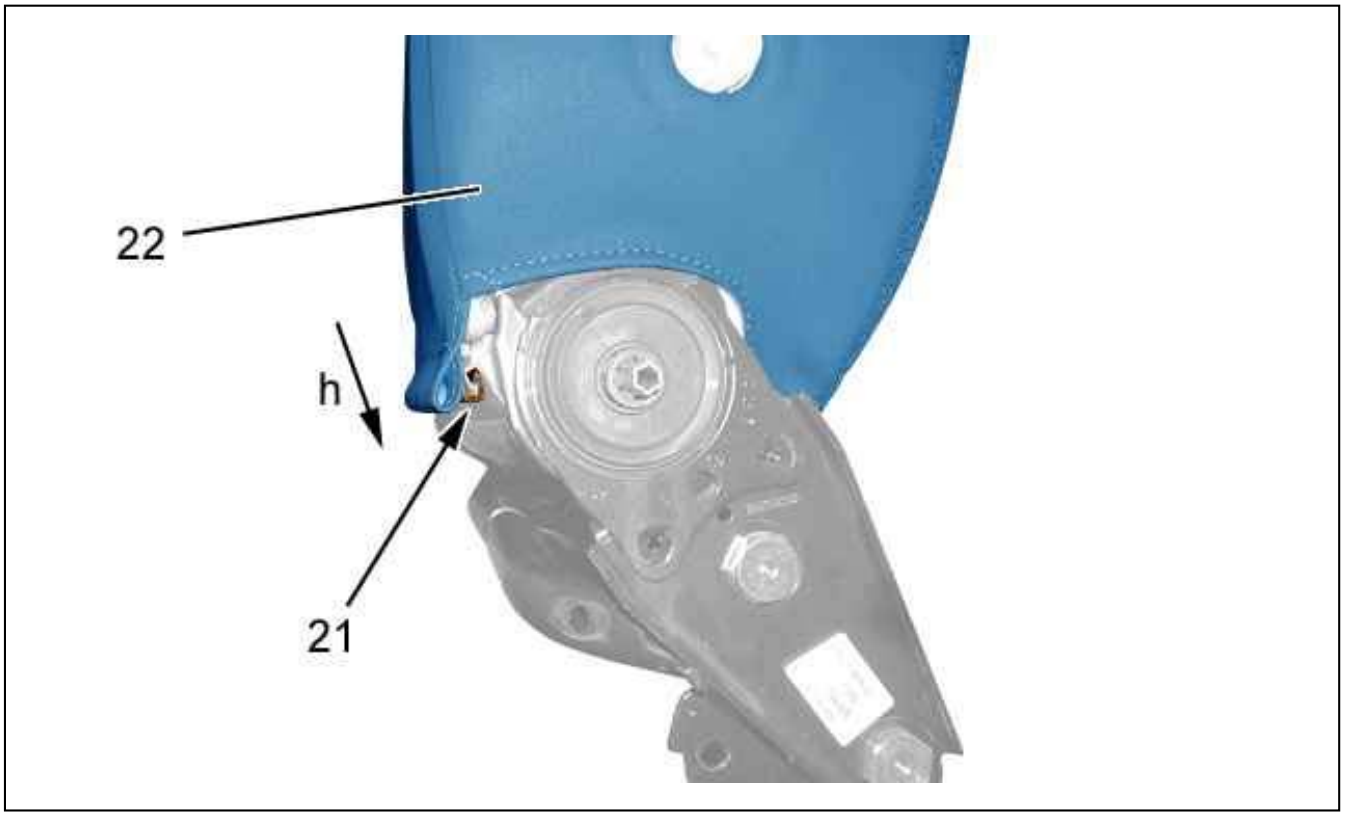

Figure : C5GP0NAD

Unclip the closure (21) of the backrest cover (22) (in direction "h").

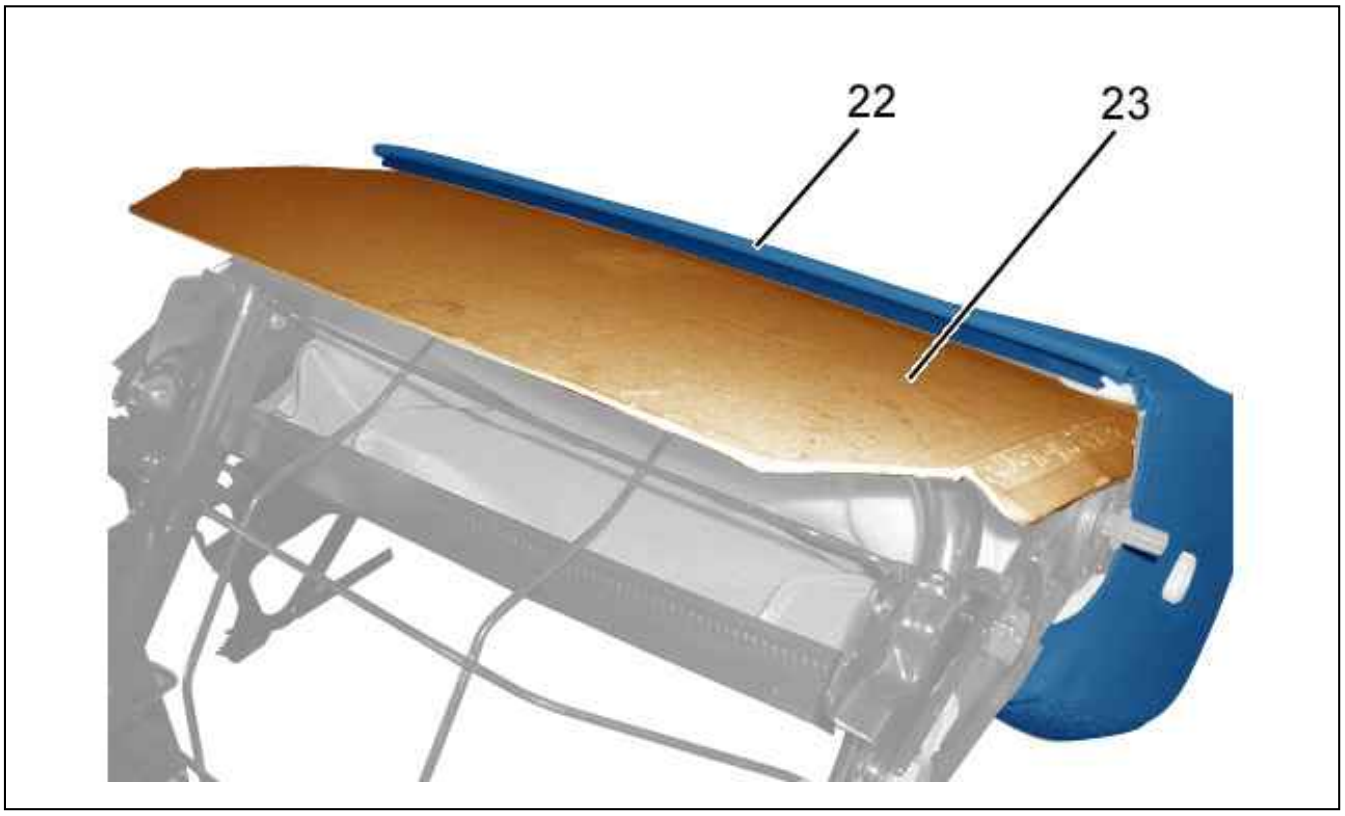

Figure : C5GP0NBD

Remove the seat rear card strengthener (23) from the backrest cover (22).

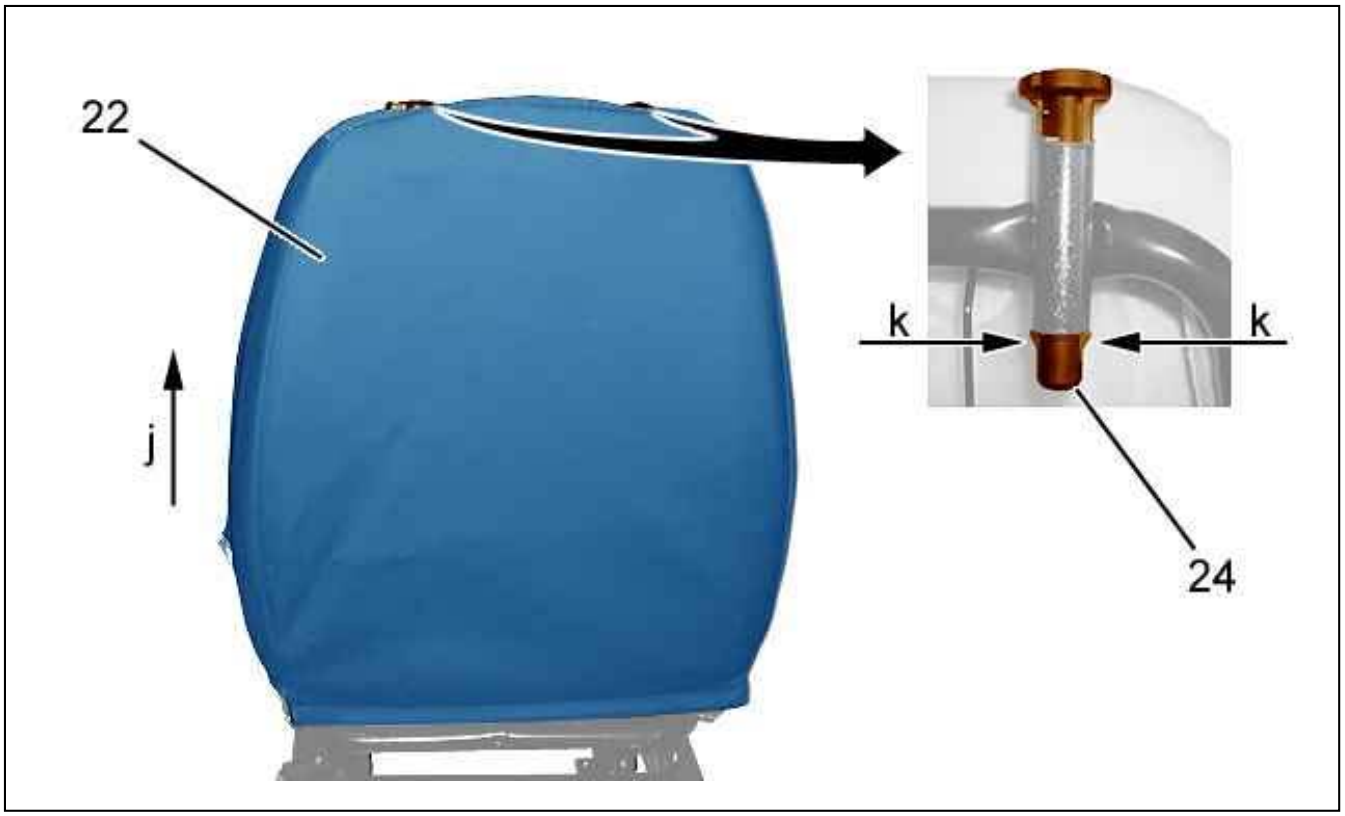

Figure : C5GP0NCD

Unclip the head restraint guides (24) (at "k").
Remove :

- The head restraint guides (24)
- The backrest cover (22) (in direction "j")

1.2. Passenger seat bottom frame (Extension plate)

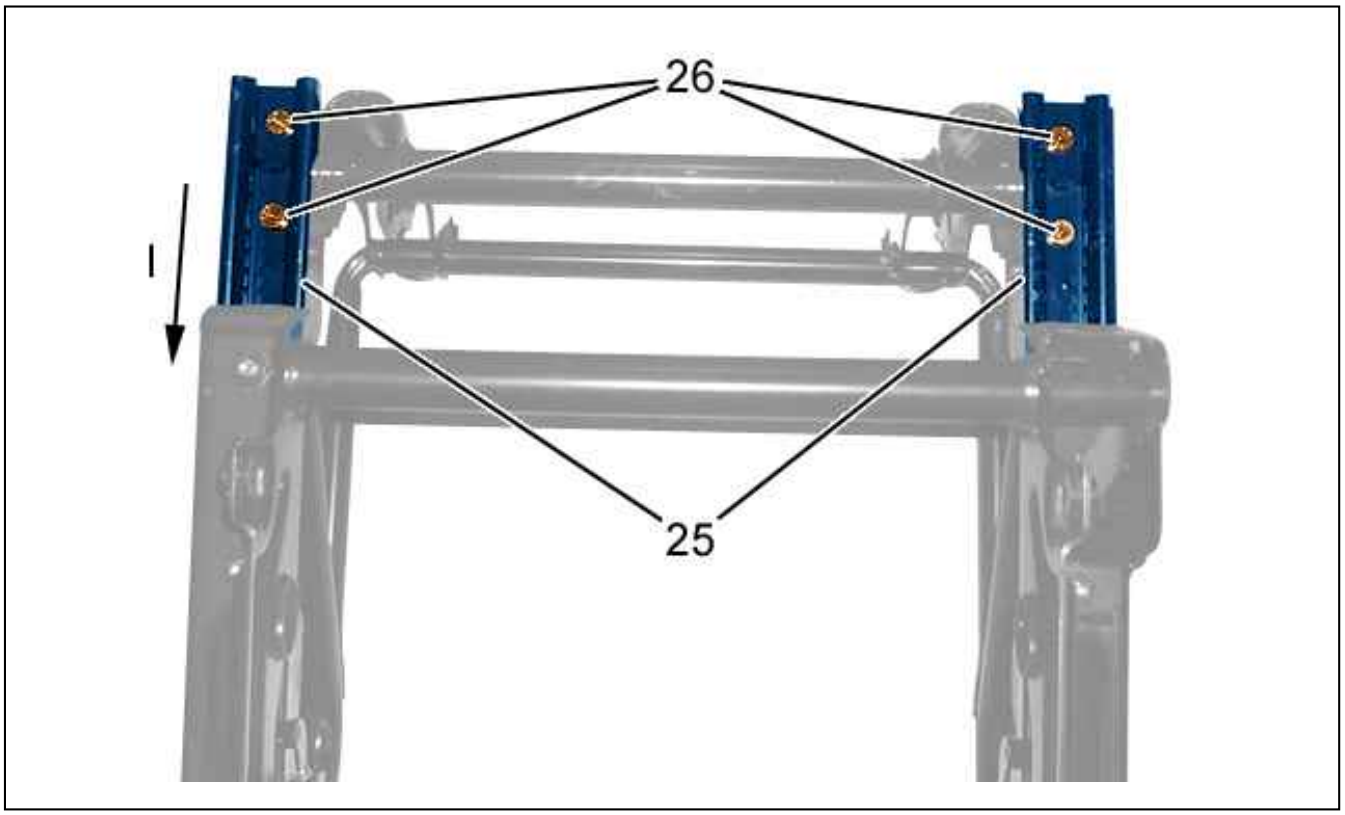

Figure : C5GP0NDD

Position the seat front rail (25) (in direction "I").
Remove the bolts (26).

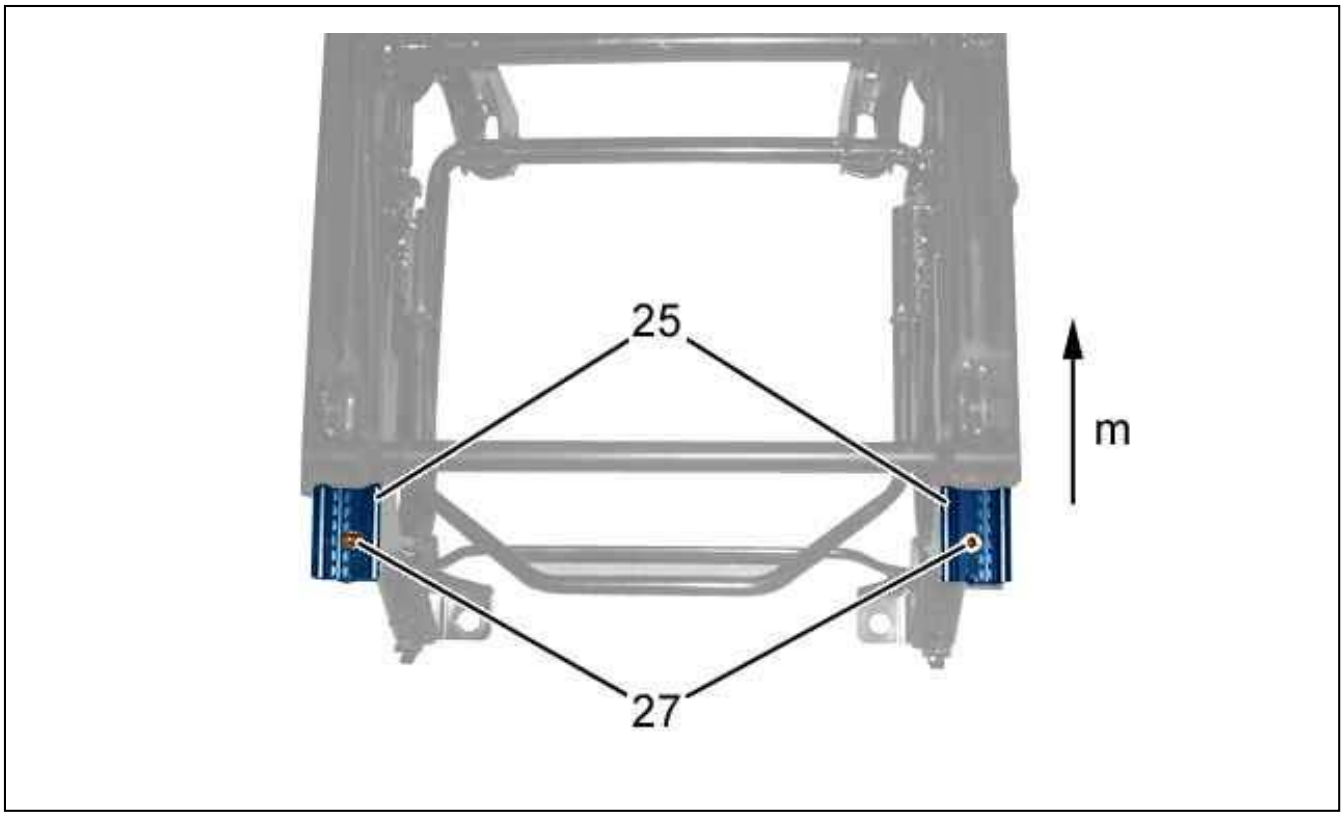

Figure : C5GP0NED

Position the seat rear rail (25) (in direction "m").
Remove :

- The bolts (27)
- The seat rail (25)

2. Re-assembling

Carry out the re-trim operations in the reverse order to the stripping operations.
Tighten :

- The bolts (5) to 0,8 ± 0,2 daN.m
- The bolts (15), (26), (27) to 2,3 ± 0,4 daN.m

STRIPPING-ASSEMBLING : DRIVER’S SEAT

1. Stripping

Remove the driver’s seat (see the relevant operation).

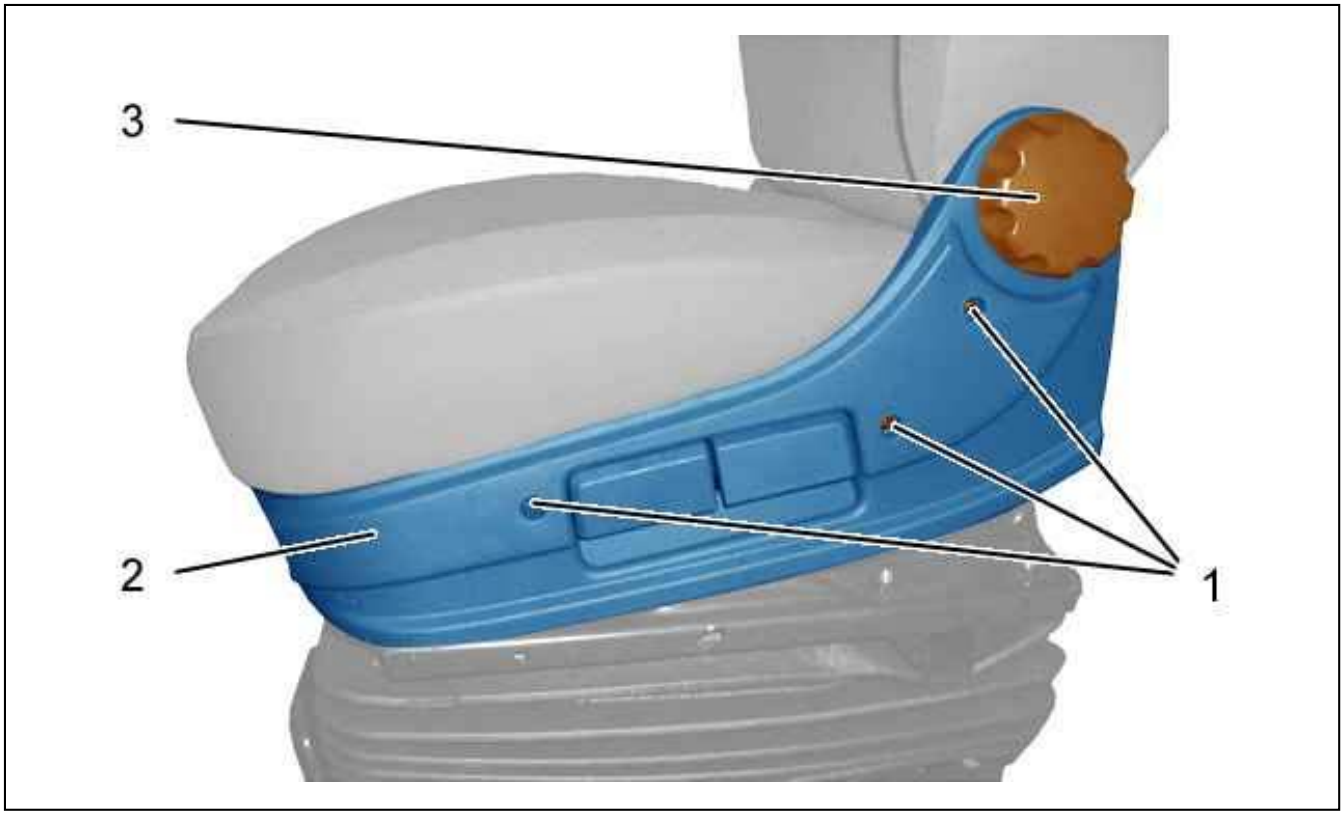

Figure : C5GP0P2D

Remove the bolts (1).
Unclip the seat backrest adjustment control (3).
Remove :

- The seat backrest adjustment control (3)
- The seat LH trim (2)

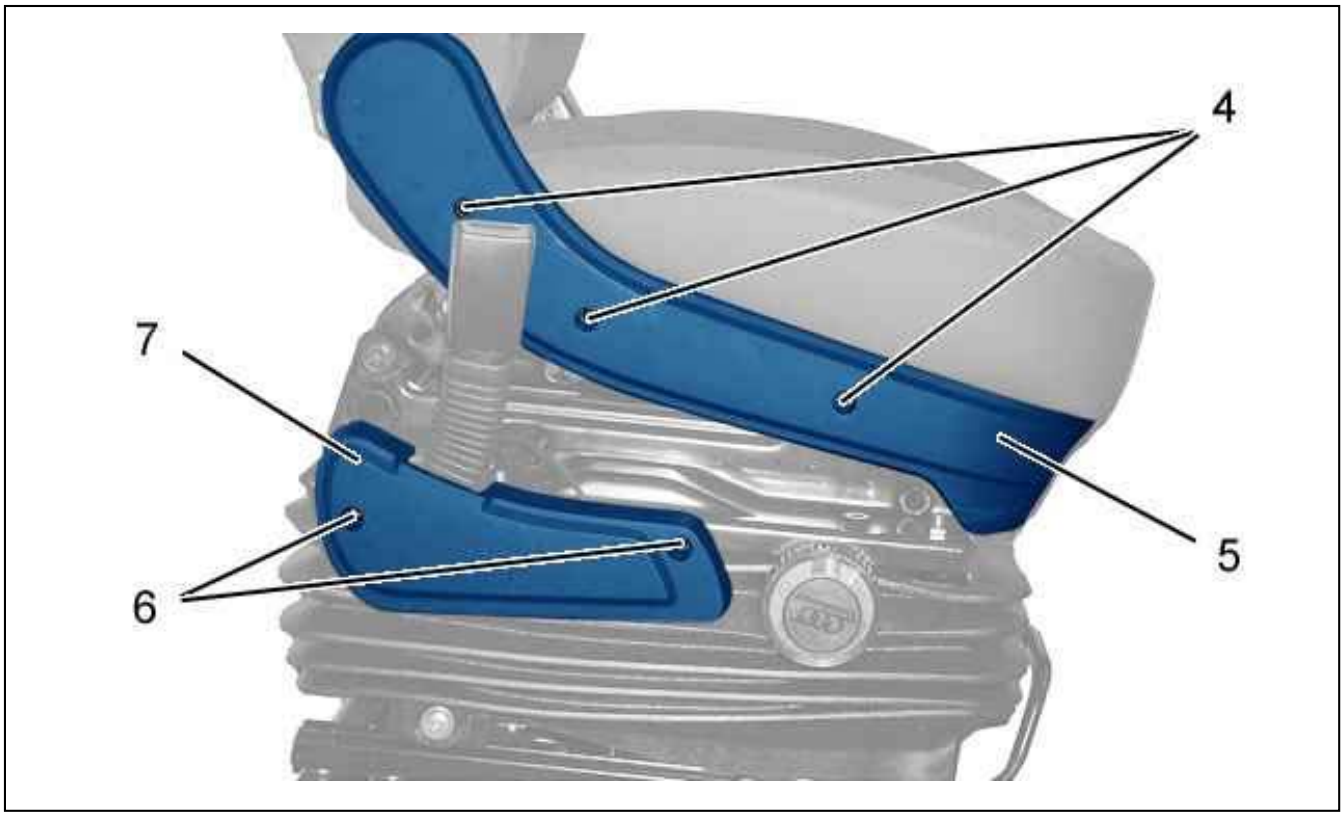

Figure : C5GP0P3D

Remove :

- The bolts (4)
- The seat RH trim (5)
- The bolts (6)
- The seat RH trim (7)
- The seat belt stalk (see the relevant operation)

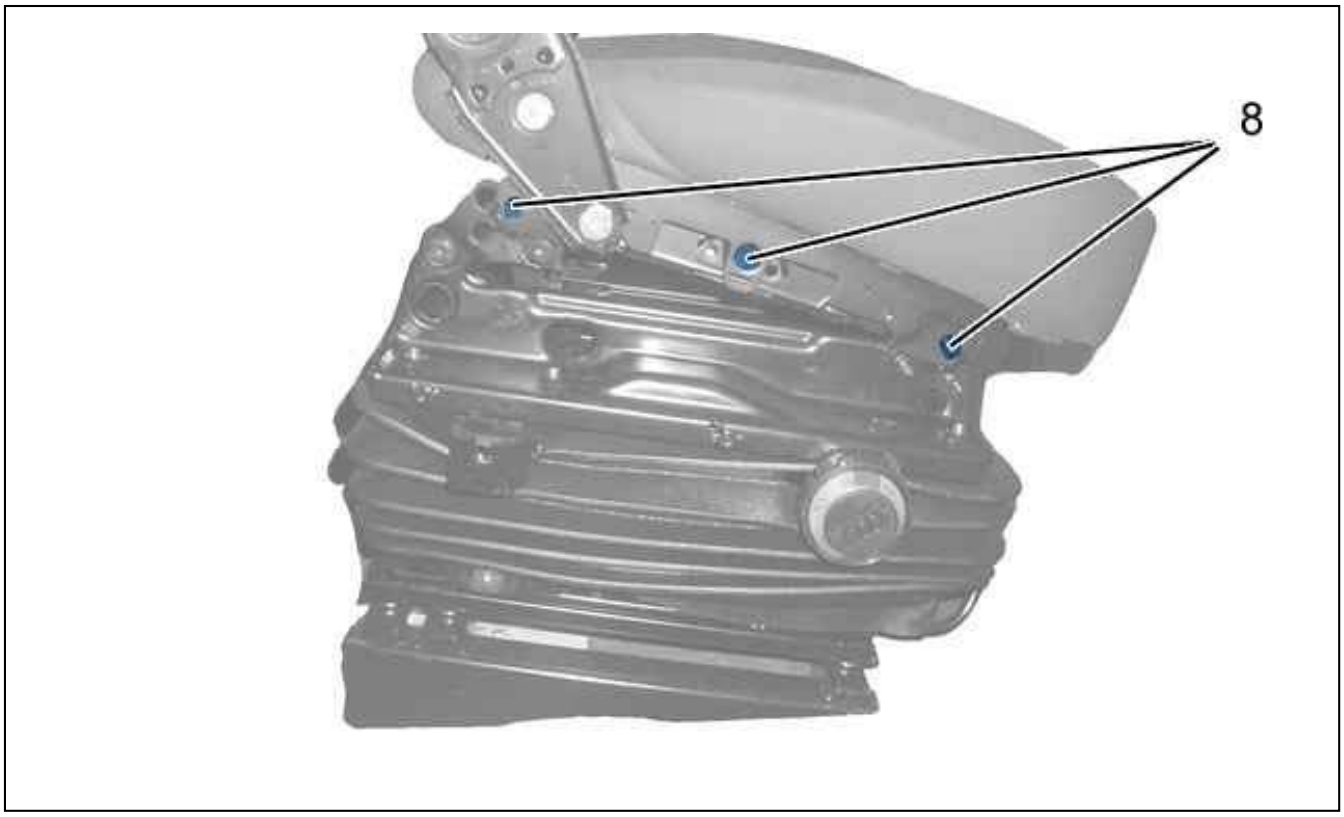

Figure : C5GP0P4D

Remove the bolts (8).

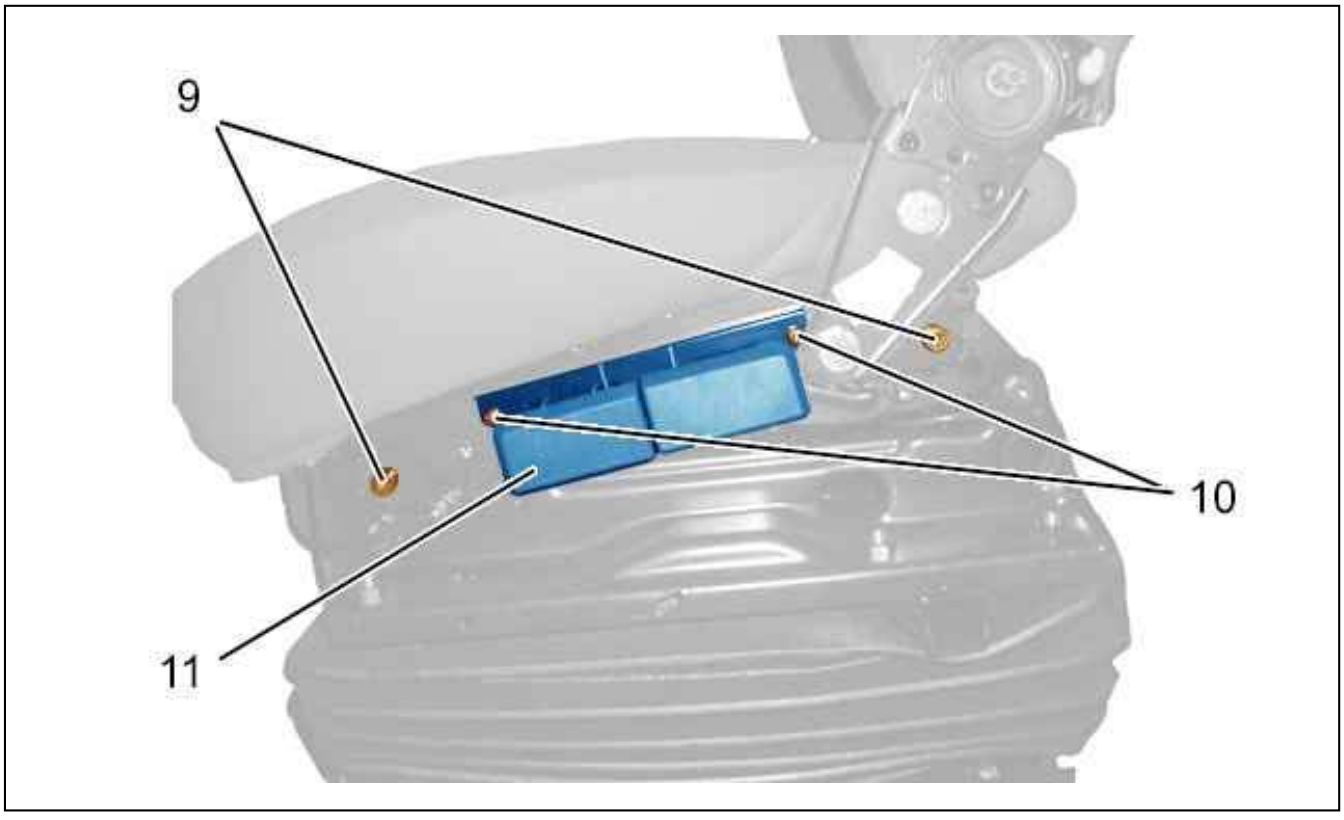

Figure : C5GP0P5D

Remove the screws (9) and (10).
Partially disengage the seat adjustment controls (11).

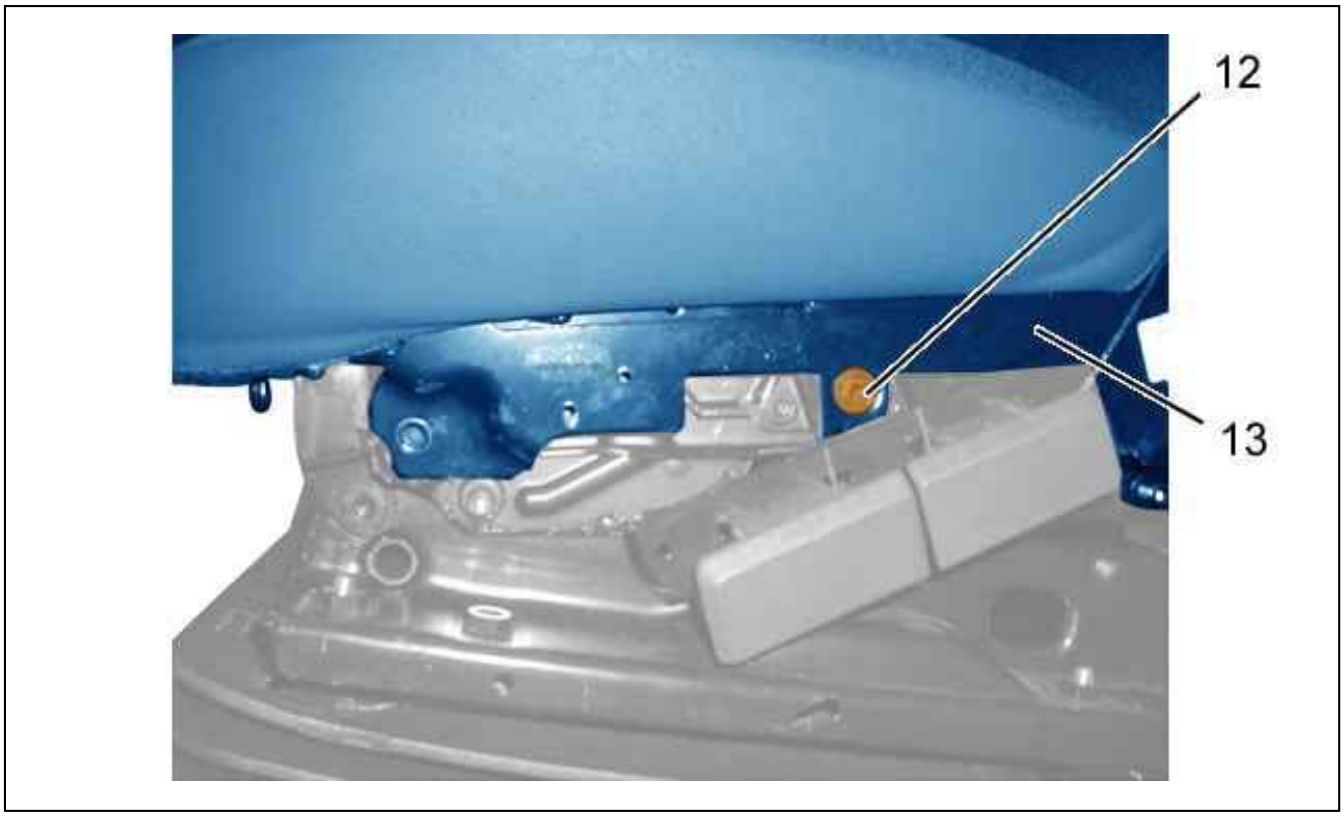

Figure : C5GP0P6D

Remove :

- The (12) bolt
- The seat cushion and backrest assembly (13)

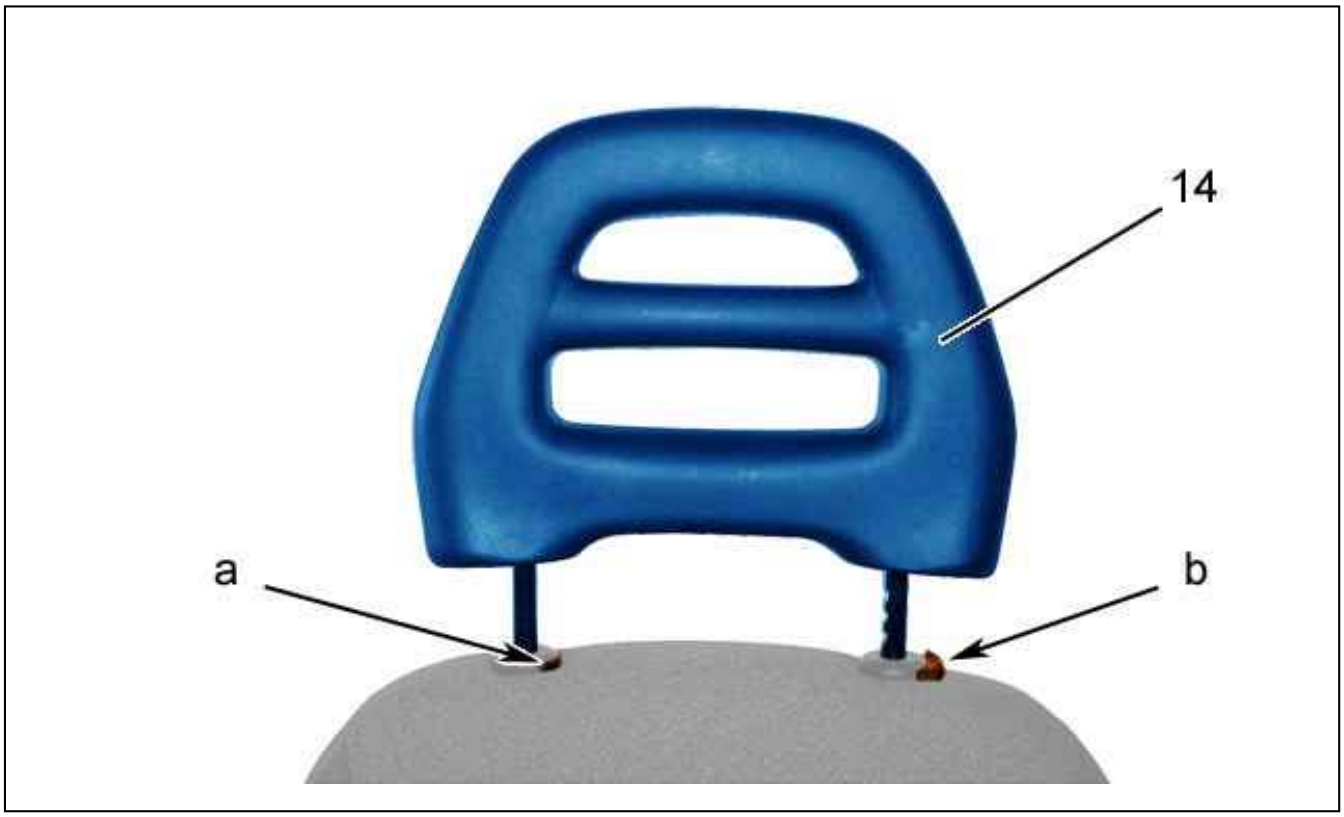

Figure : C5GP0P7D

Remove the head restraint (14) (press at "a", "b" and lift).

1.1. Seat

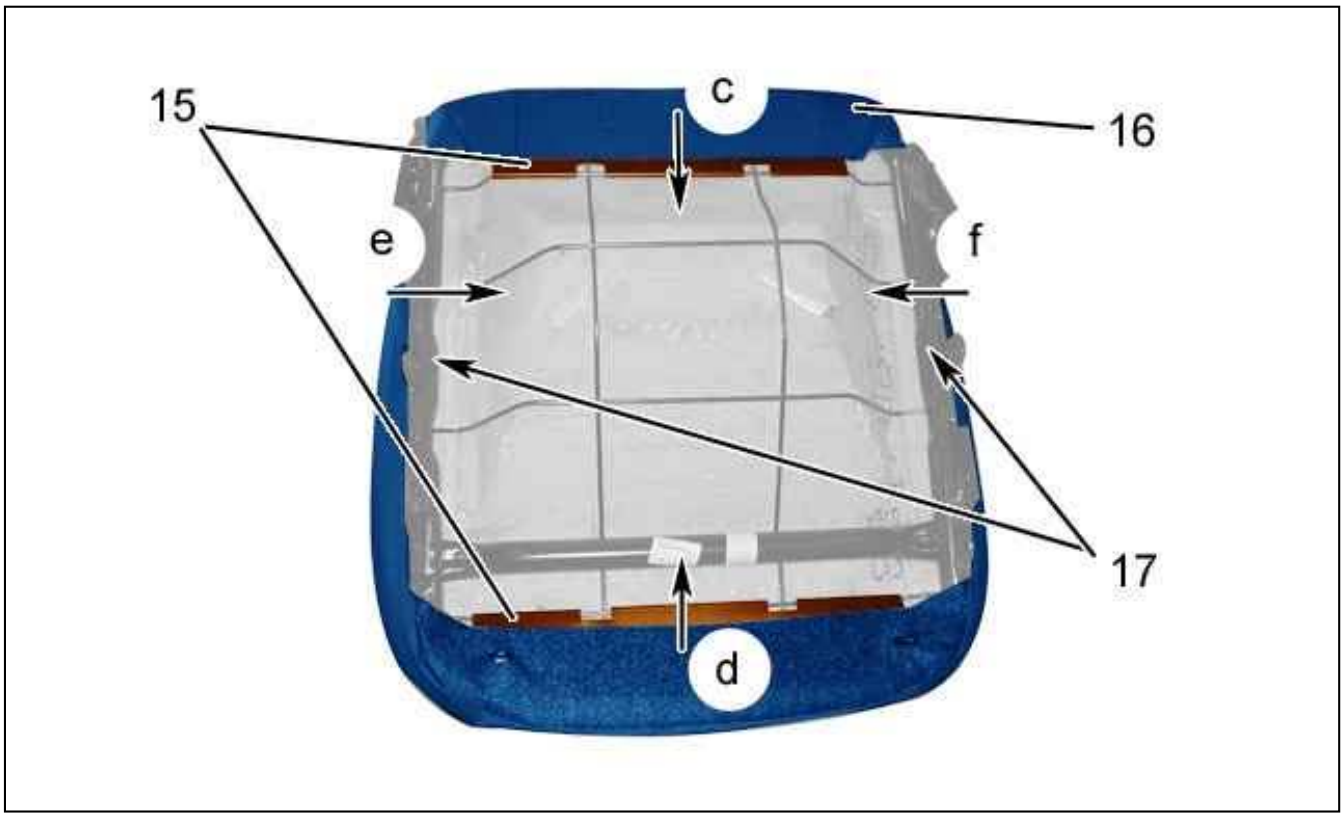

Figure : C5GP0P8D

Unclip :

- The closures (15) of the cushion cover (16) (following the arrows "c" and "d")
- The closures (17) of the cushion cover (16) (following the arrows "e" and "f")

Remove the cushion cover (16).

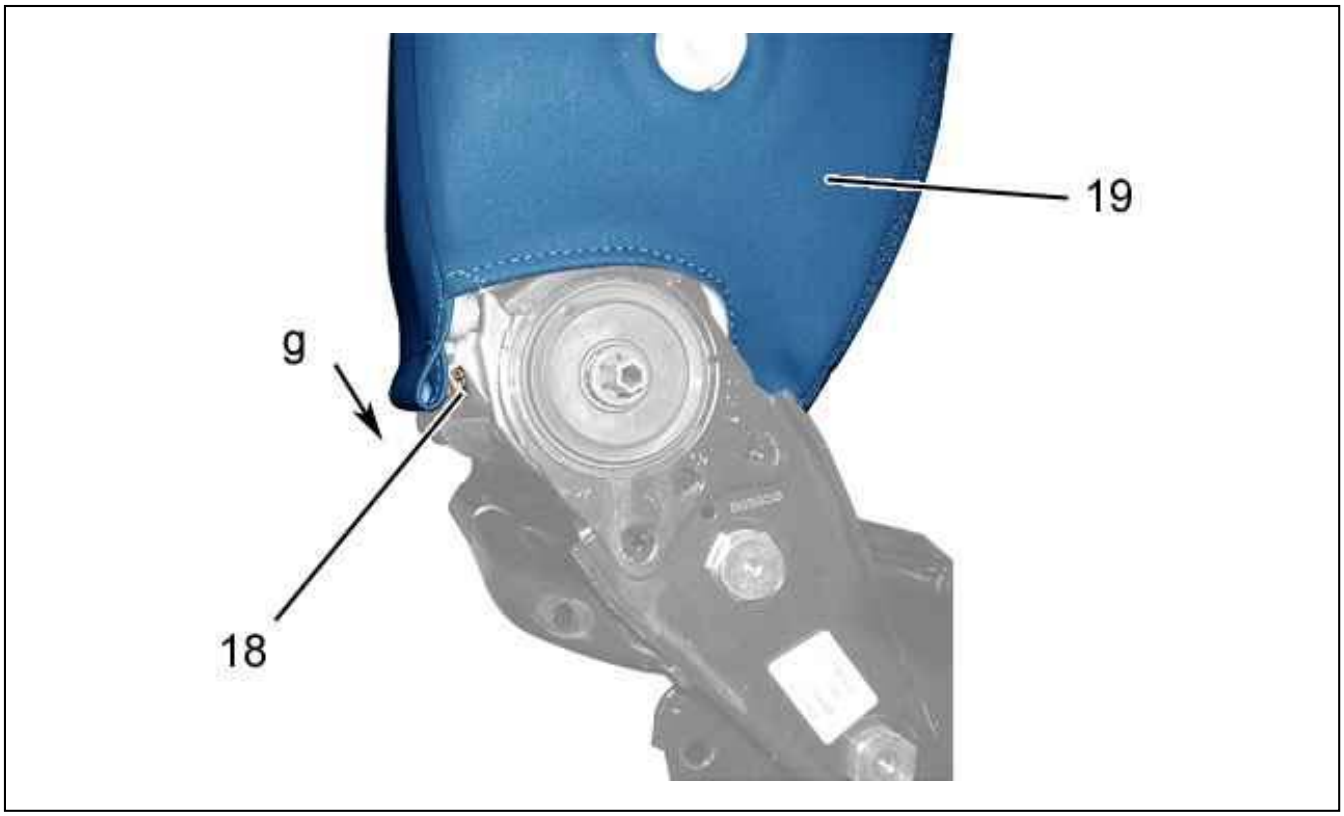

Figure : C5GP0P9D

Unclip the closure (18) of the backrest cover (19) (following "g").

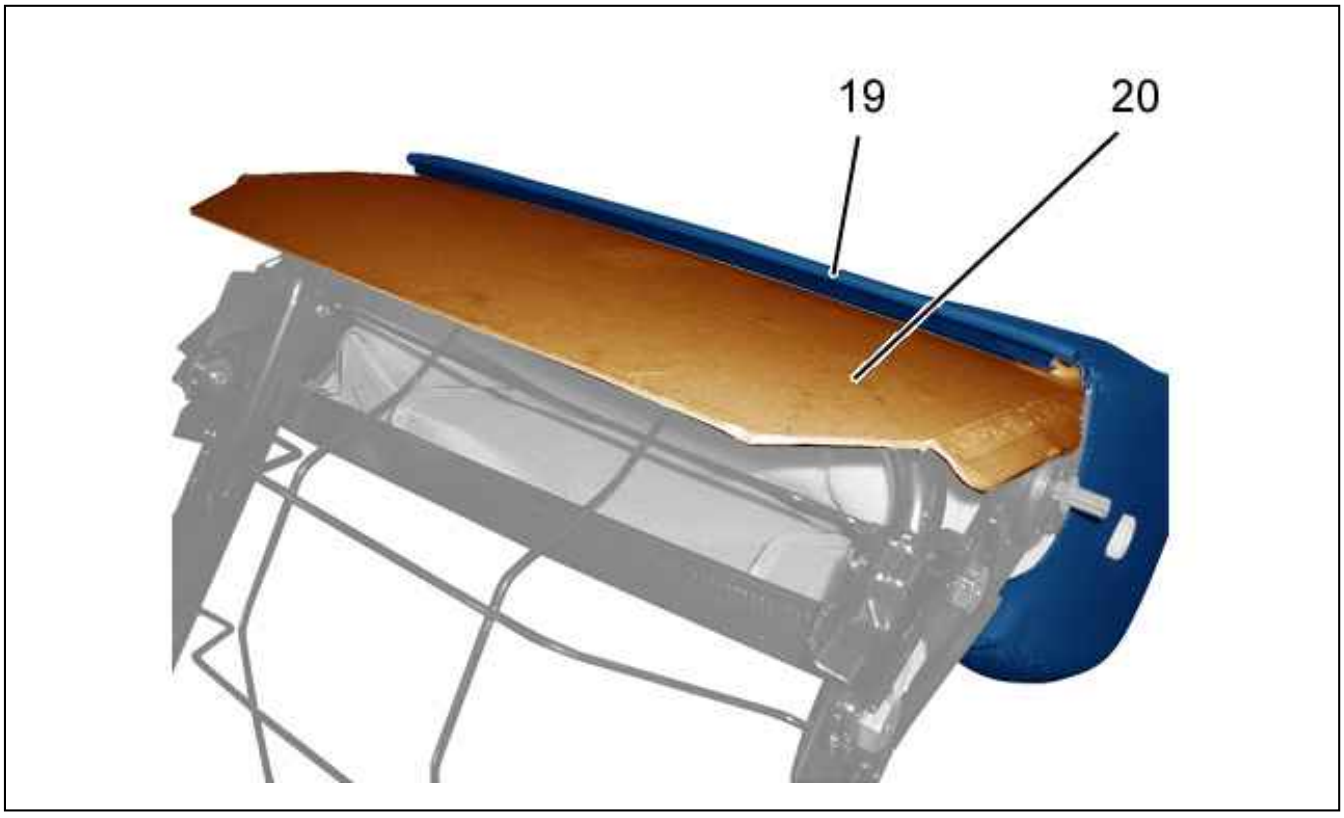

Figure : C5GP0PAD

Remove the seat rear card strengthener (20) from the backrest cover (19).

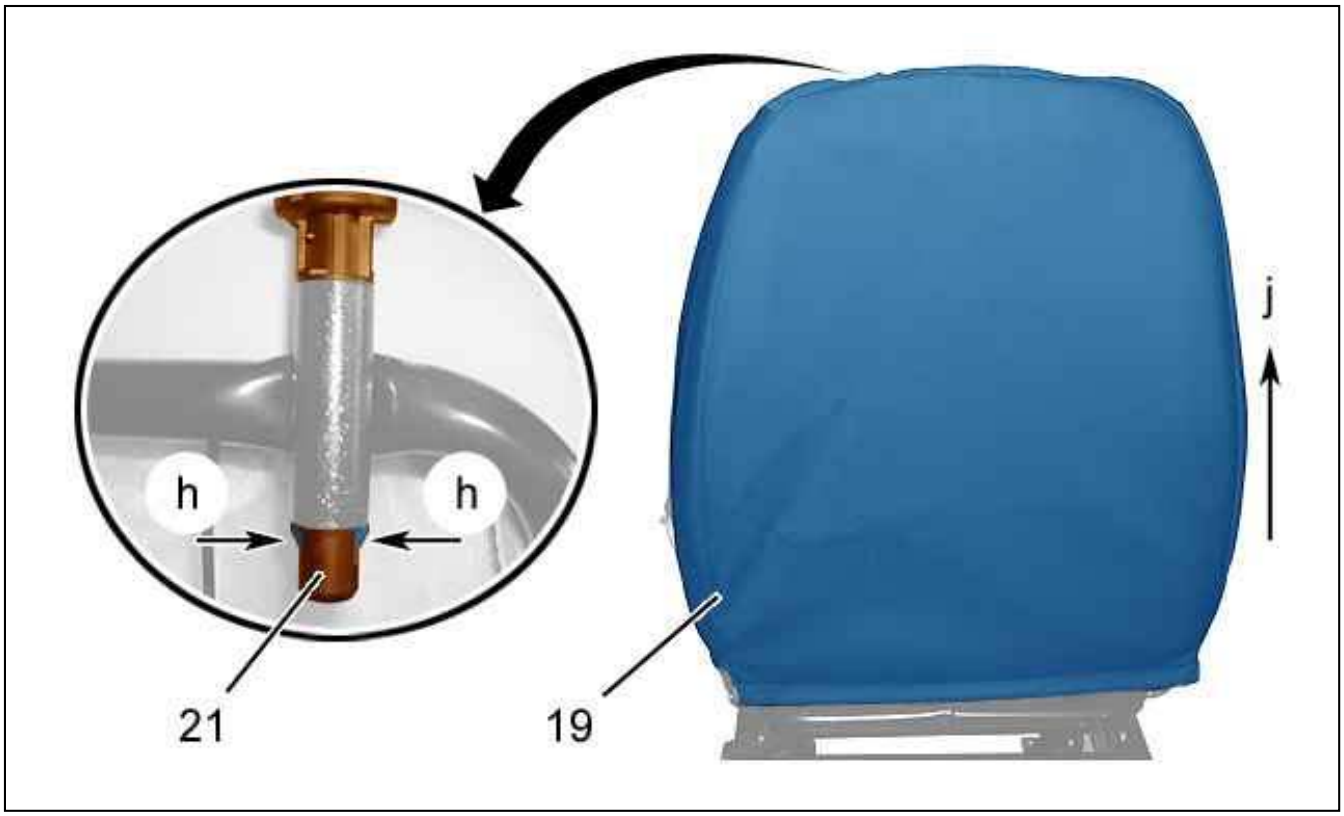

Figure : C5GP0PBD

Unclip the head restraint guides (21) (at "h").
Remove :

- The head restraint guides (21)
- The backrest cover (19) (following "j")

1.2. Driver’s seat bottom frame - Extension plate

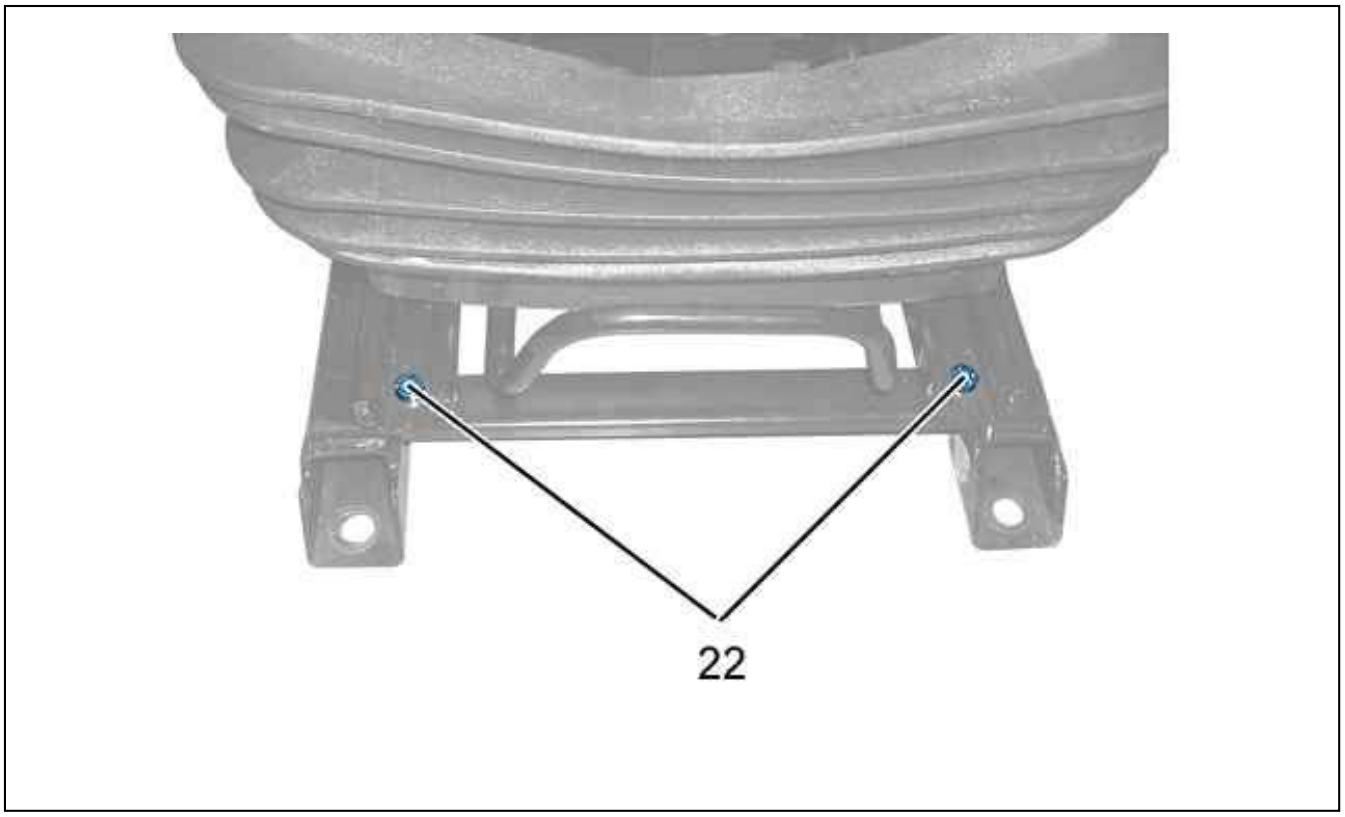

Figure : C5GP0PCD

Remove the bolts (22).

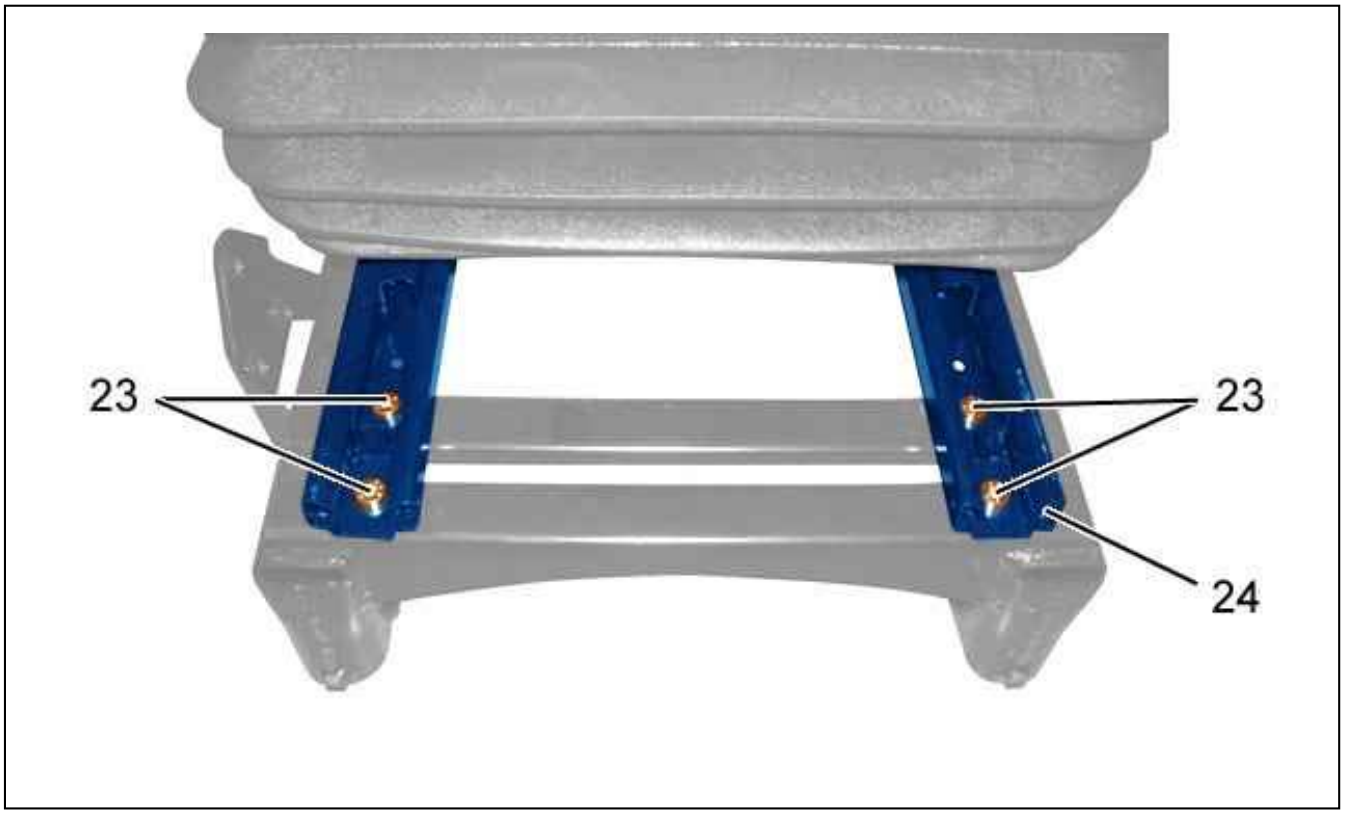

Figure : C5GP0PDD

Remove :

- The bolts (23)

- The seat rail (24)

2. Re-assembling

Carry out the re-trim operations in the reverse order to the stripping operations.
Tighten :

- The bolts (1), (4), (6), (10) to 0,2 ± 0,1 daN.m
- The bolts (8), (9) to 0,5 ± 0,2 daN.m
- The bolts (12) to 0,8 ± 0,2 daN.m
- The bolts (22), (23) to 2,3 ± 0,4 daN.m

Test the operation of the controls for adjusting the driver’s seat.

STRIPPING-ASSEMBLING : FRONT PASSENGER BENCH SEAT

ESSENTIAL : Observe the safety and cleanliness recommendations .

1. Tooling

Tool	Reference	Designation
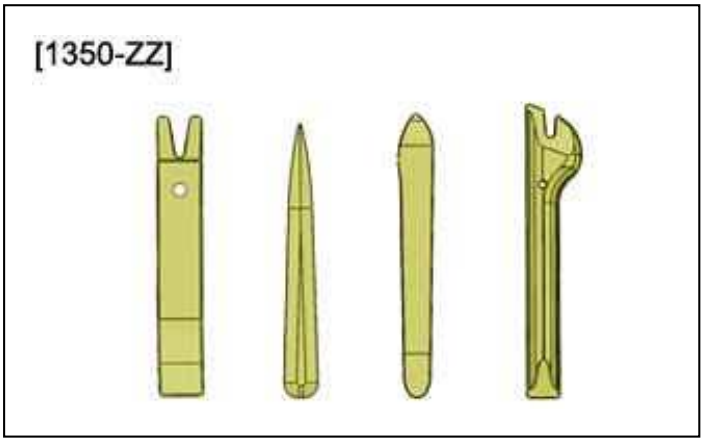 Figure : E5AG02MT	[1350-ZZ]	Stripping tools

2. Stripping

Remove the front passenger benchseat .

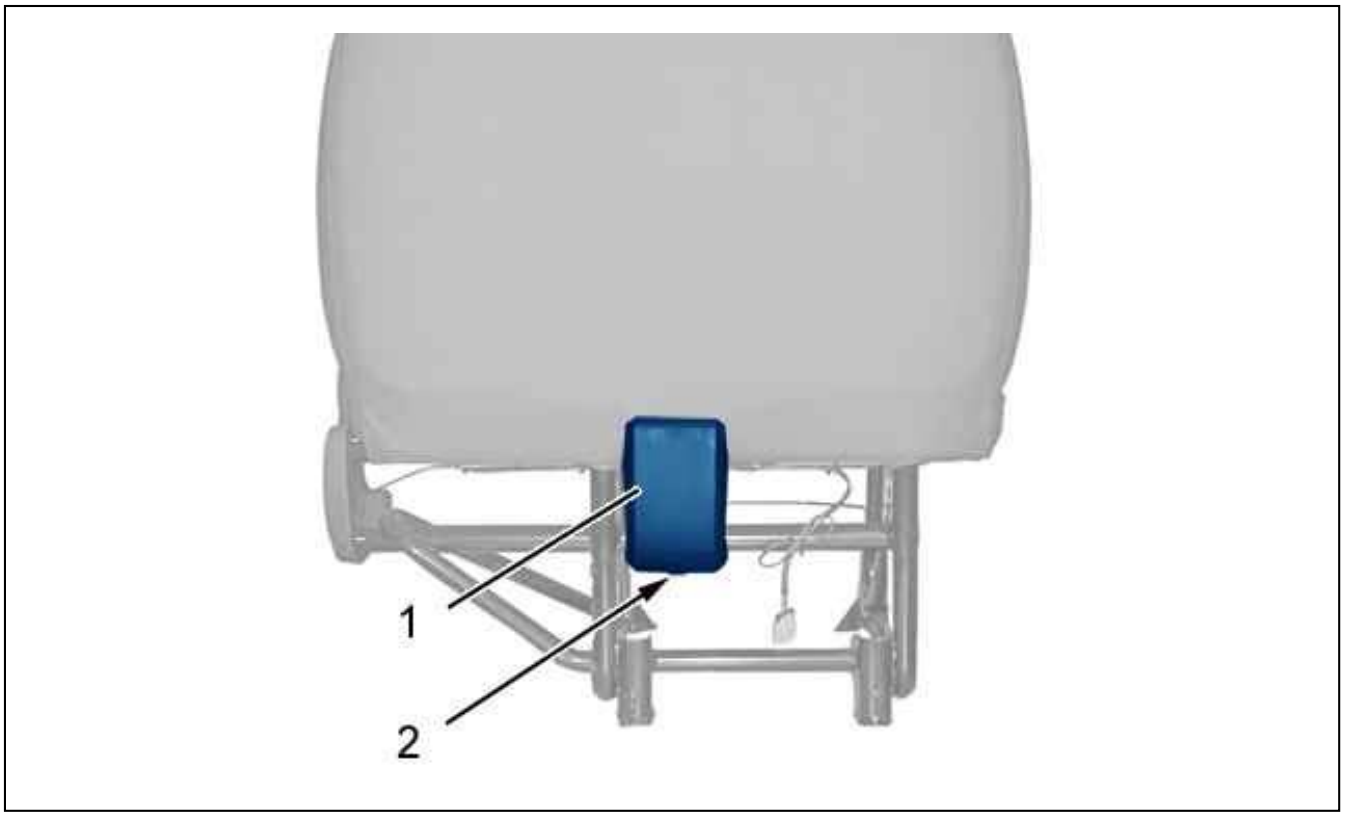

Figure : C5GS1HHD

Remove :

- The (2) bolt
- The seat belt lower trim (1)

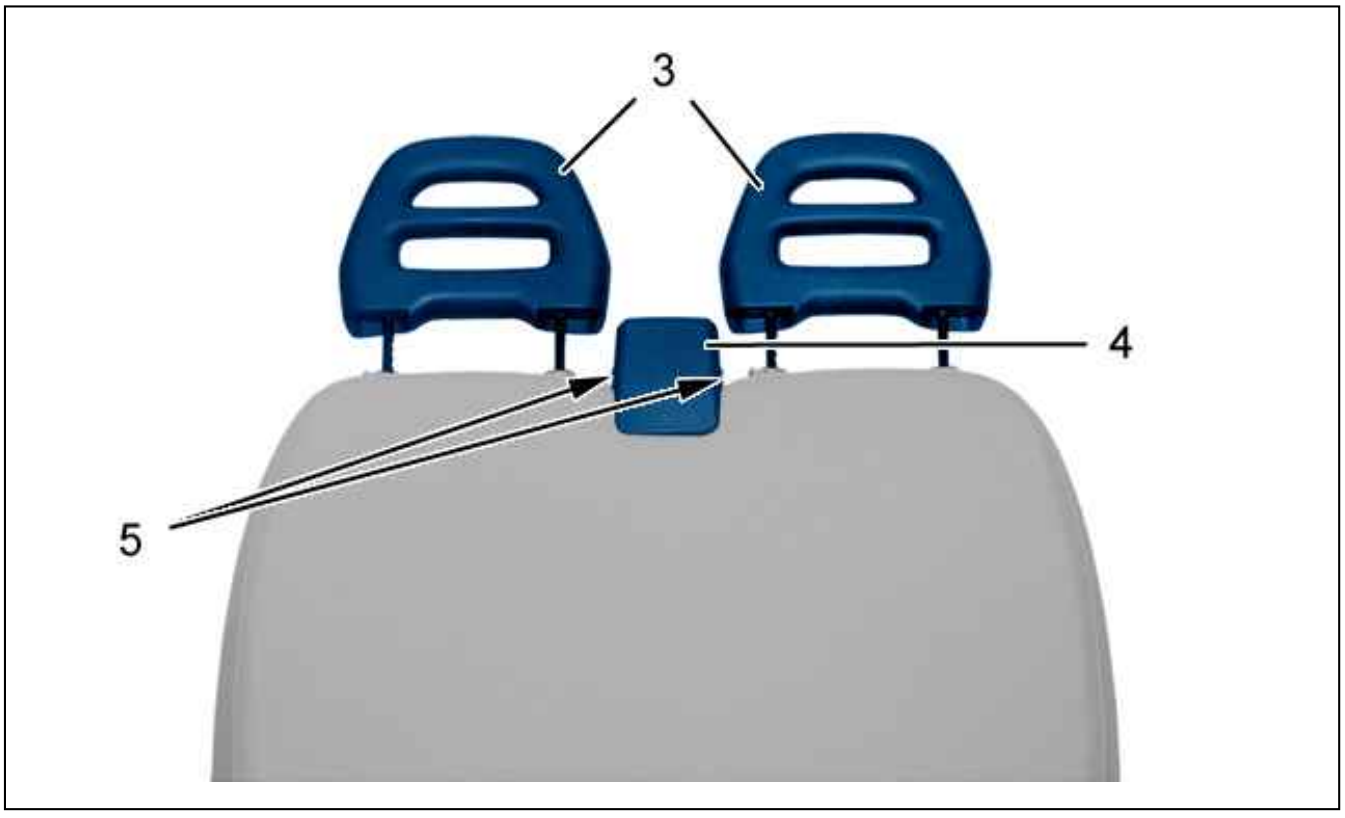

Figure : C5GP0PLD

Remove :

- The head restraints (3)
- The bolts (5)
- The seat belt upper trim (4)

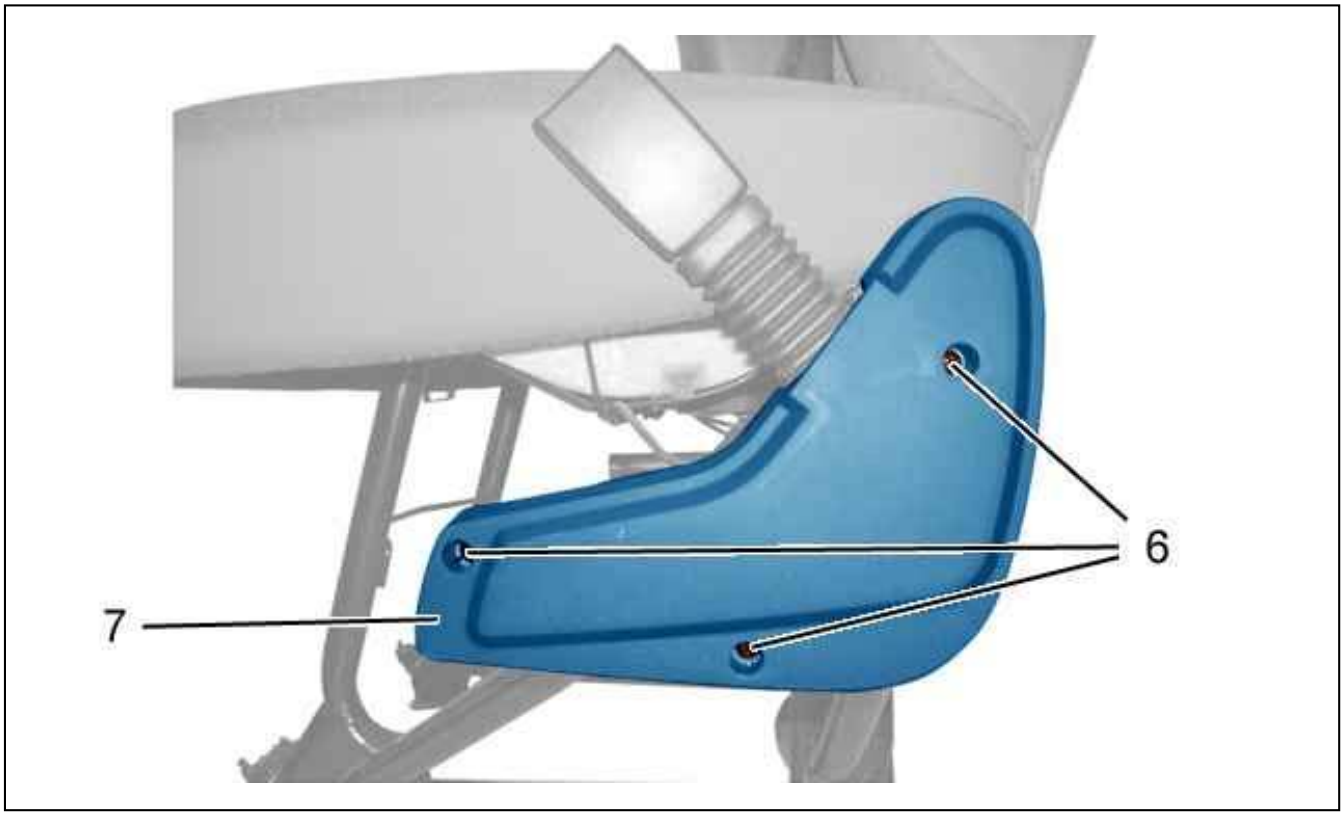

Figure : C5GP0PMD

Remove :

- The bolts (6)
- The trim (7)
- The pyrotechnic seat belts

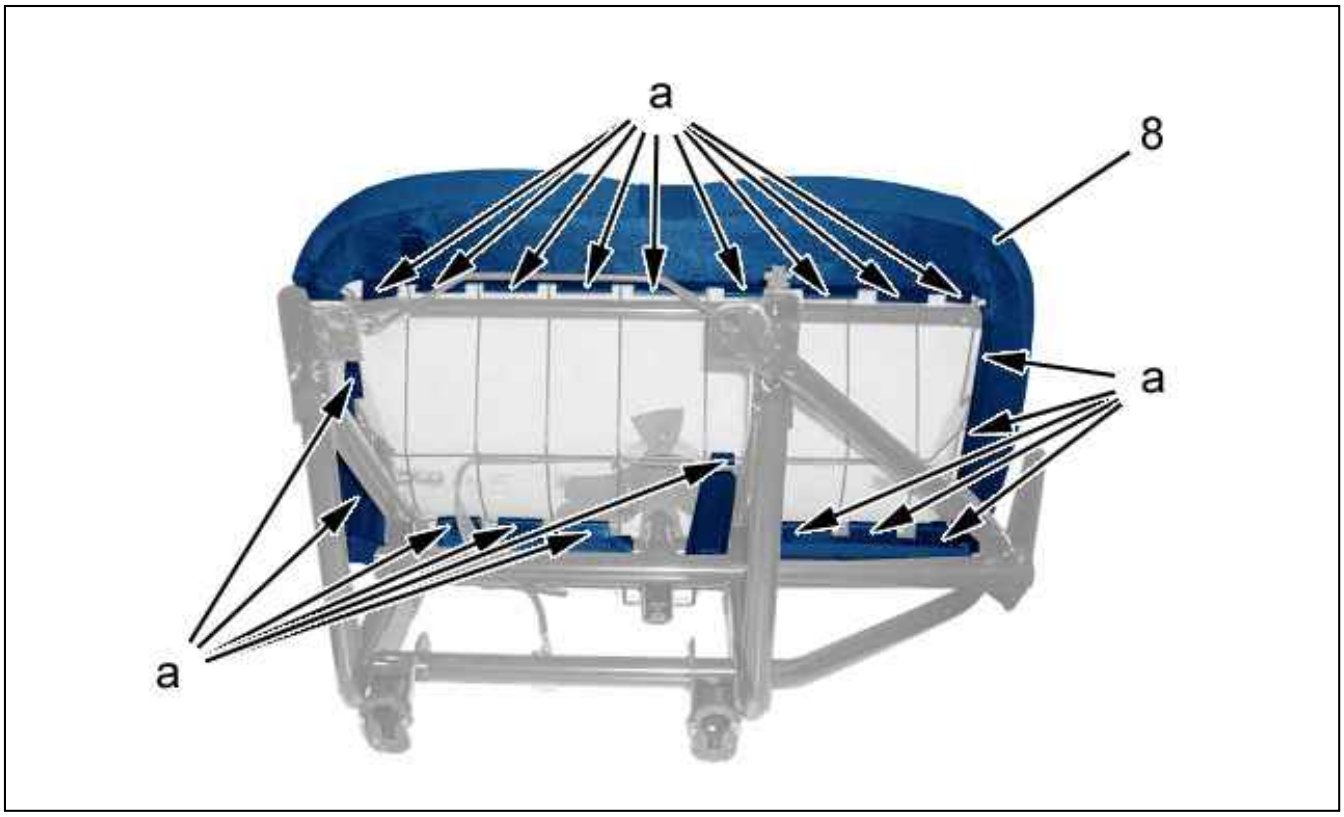

Figure : C5GP0PND

Unclip the cushion cover (8) fasteners at "a" ; Using tool [1350-ZZ].



Figure : C5GS1HID

Remove the backrest cover (9) cardboard strengthener (10).

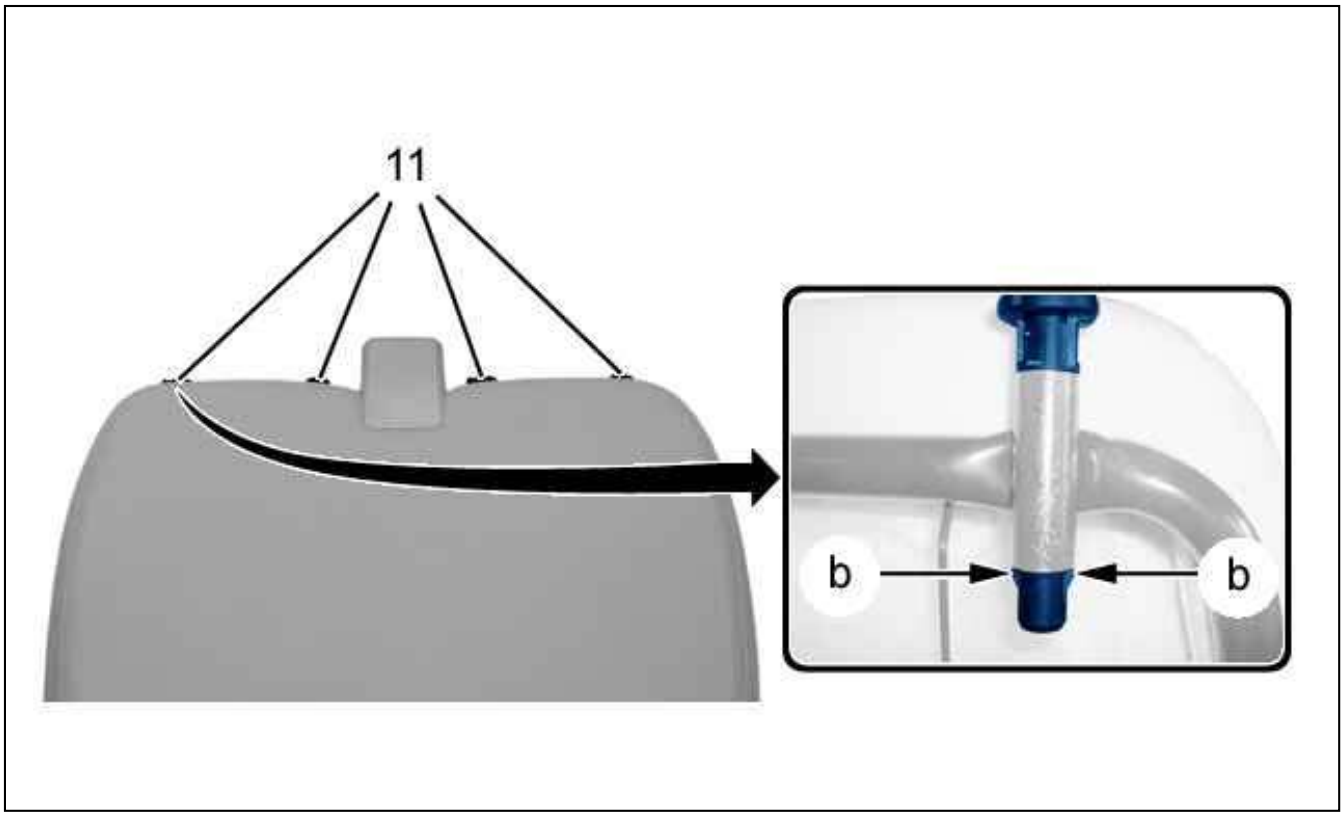

Figure : C5GP0PQD

Unclip the head restraint guides (11) (at "b").
Remove the head restraint guides (11).



Figure : C5GP0PRD

Unclip the cushion cover (8) fastener at "c" ; Using tool [1350-ZZ].

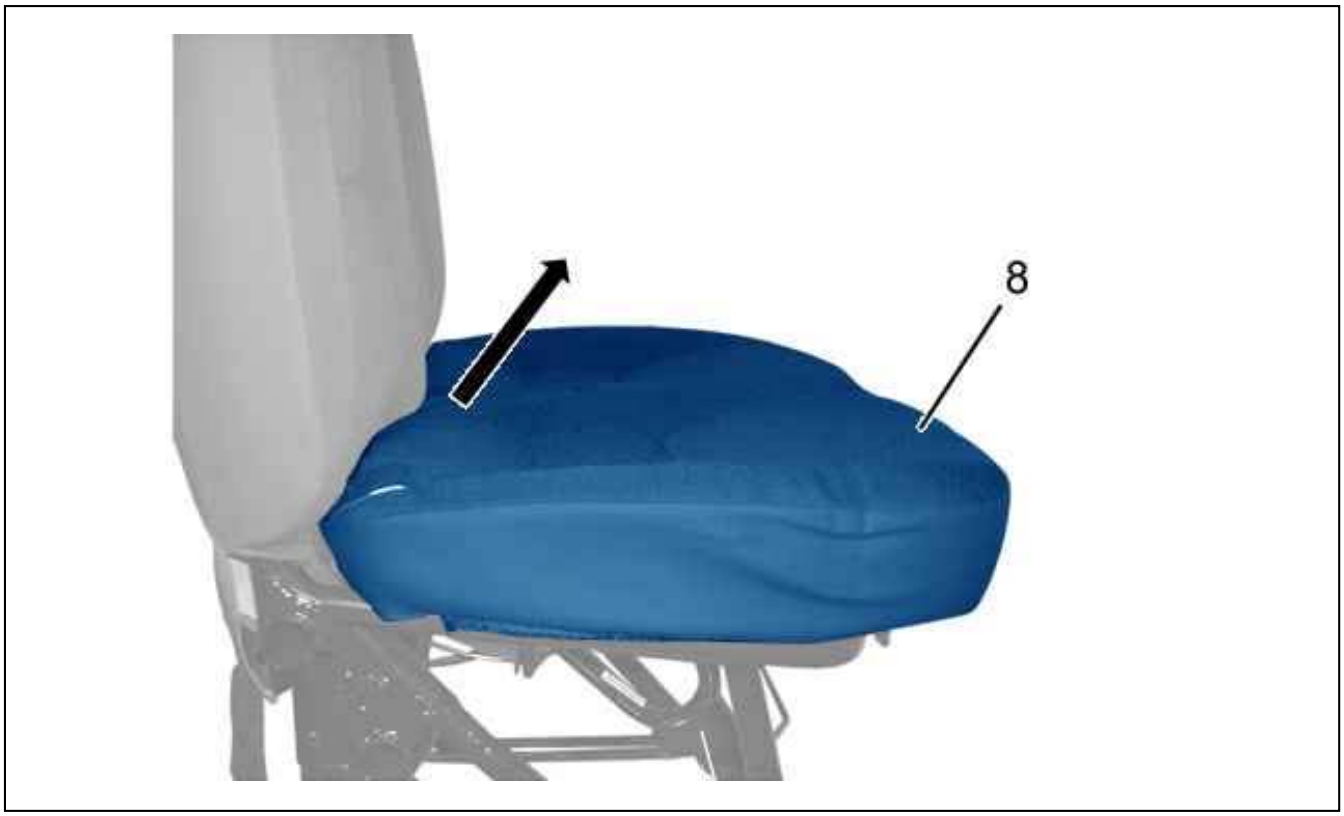

Figure : C5GP0PSD

Detach the cushion cover (8) (In the direction of the arrow).
Remove the cushion cover (8).



Figure : C5GP0PTD

Remove :

- The backrest table (12) bolts (13)
- The backrest table (12)

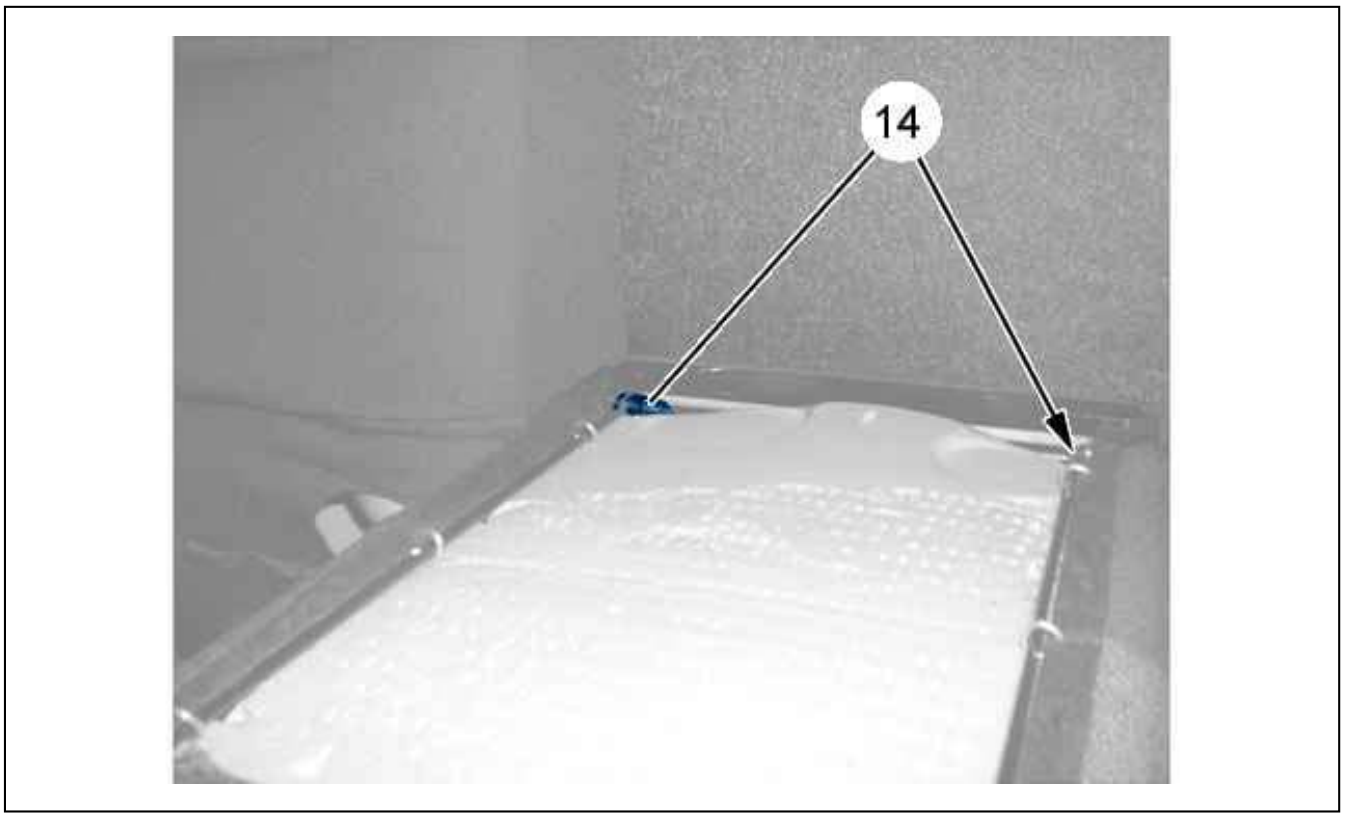

Figure : C5GP0PUD

Remove the springs (14).

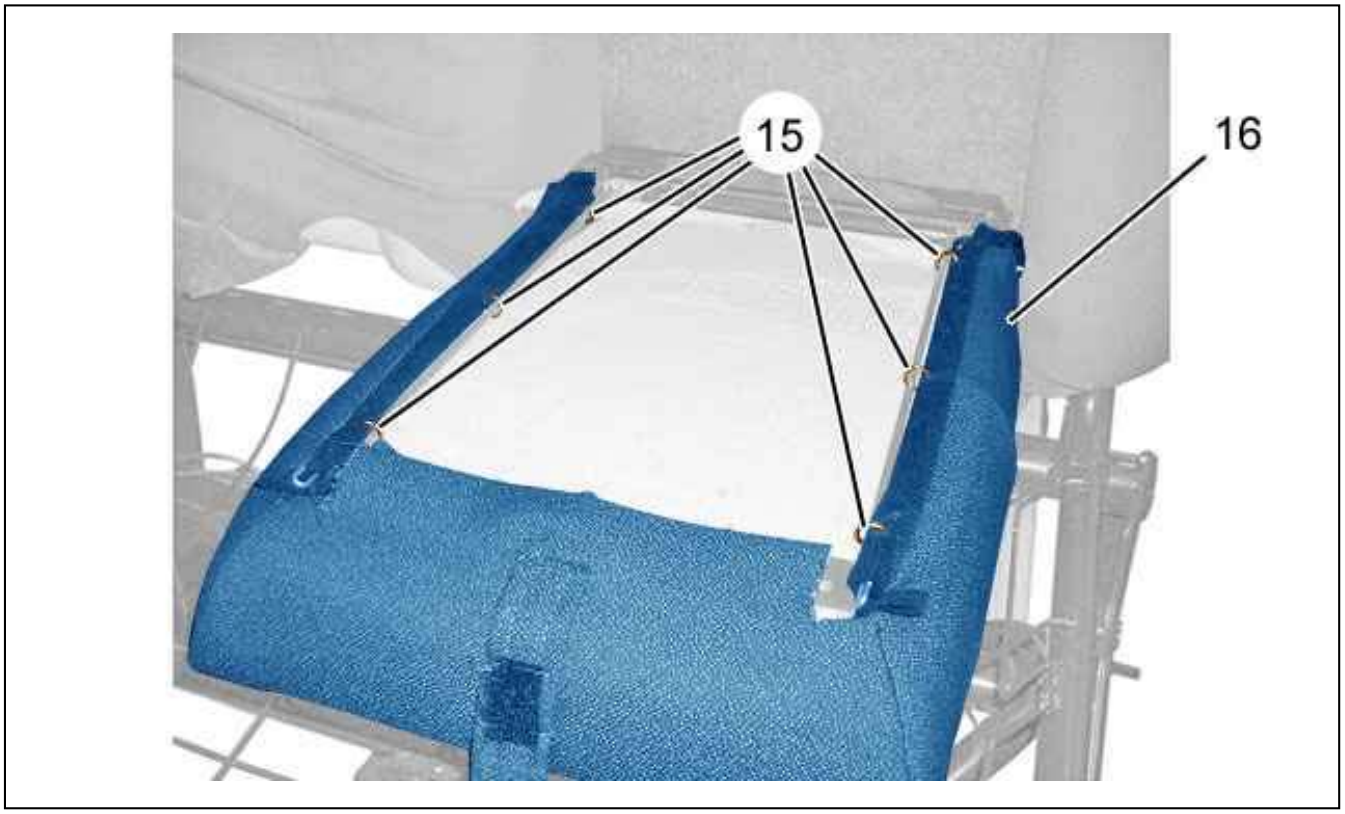

Figure : C5GS1HJD

Remove :

- The rings (15) ; Using tool [1350-ZZ]
- The table padding (16)

N.B. : Be prepared to replace the rings (15).

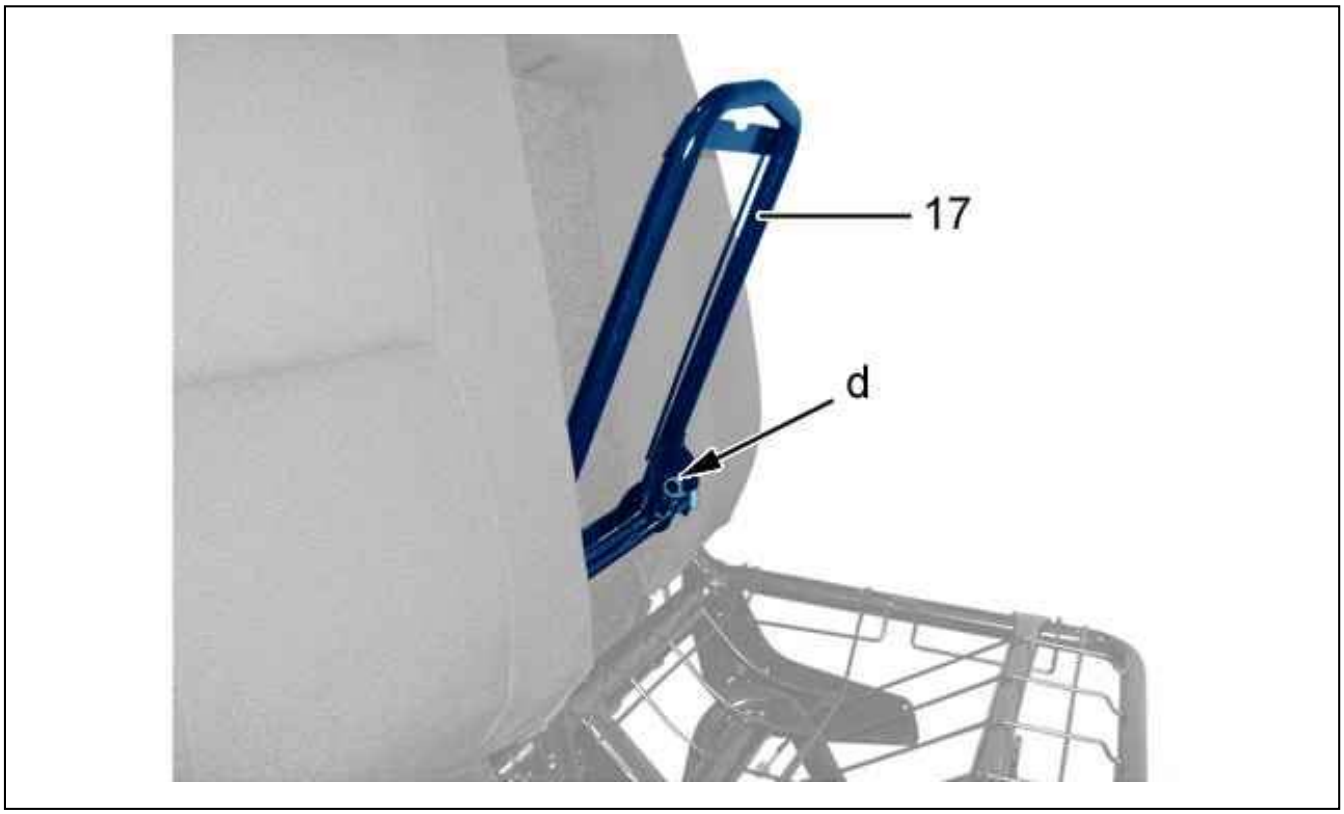

Figure : C5GP0PWD

Unclip the table frame (at "d").
Remove the table frame (17).

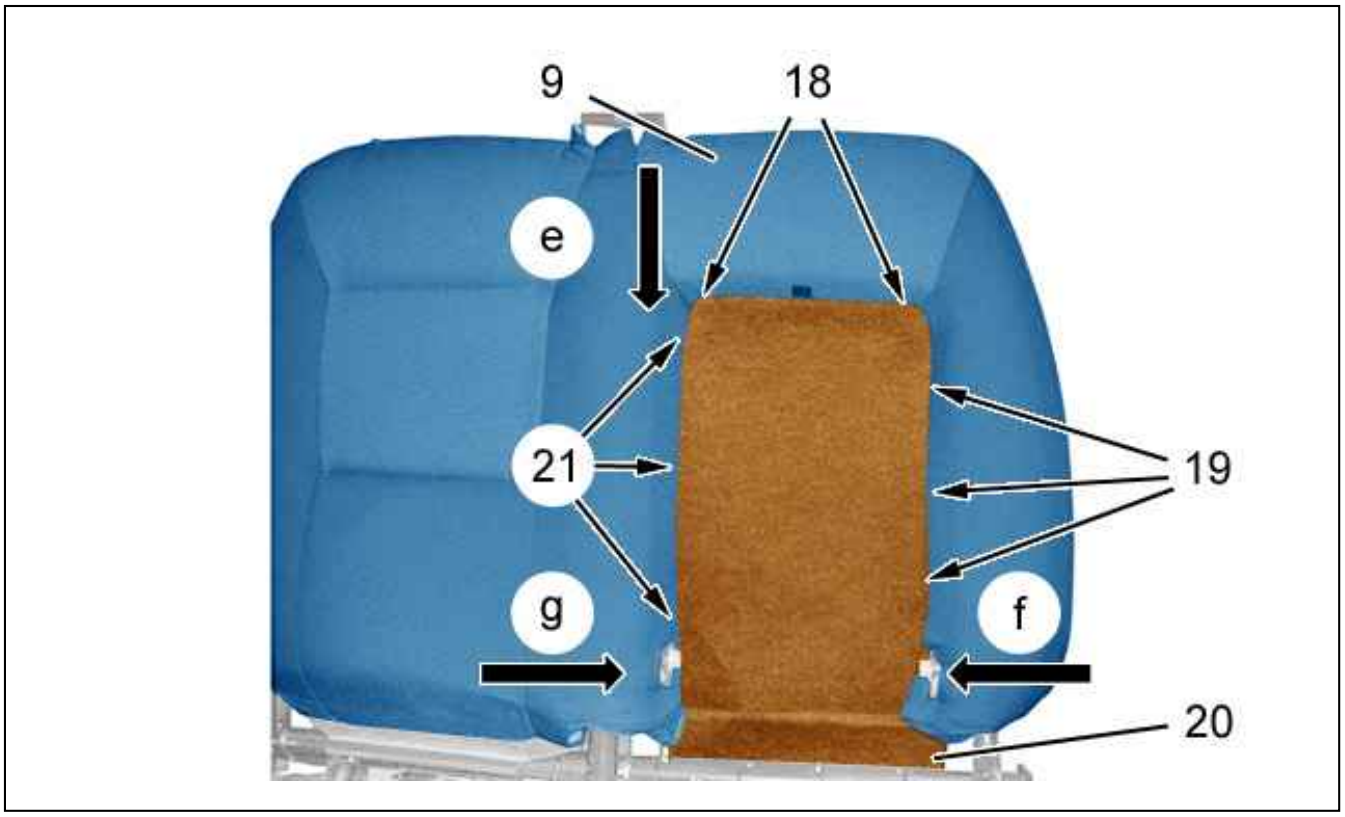

Figure : C5GS1HND

Unclip :

- The backrest cover (9) fasteners (18) (following "e") ; Using tool [1350-ZZ]
- The backrest cover (9) fasteners (21) (following "g") ; Using tool [1350-ZZ]
- The backrest cover (9) fasteners (19) (following "f") ; Using tool [1350-ZZ]

Remove the cardboard strengthener (20) (following "e").

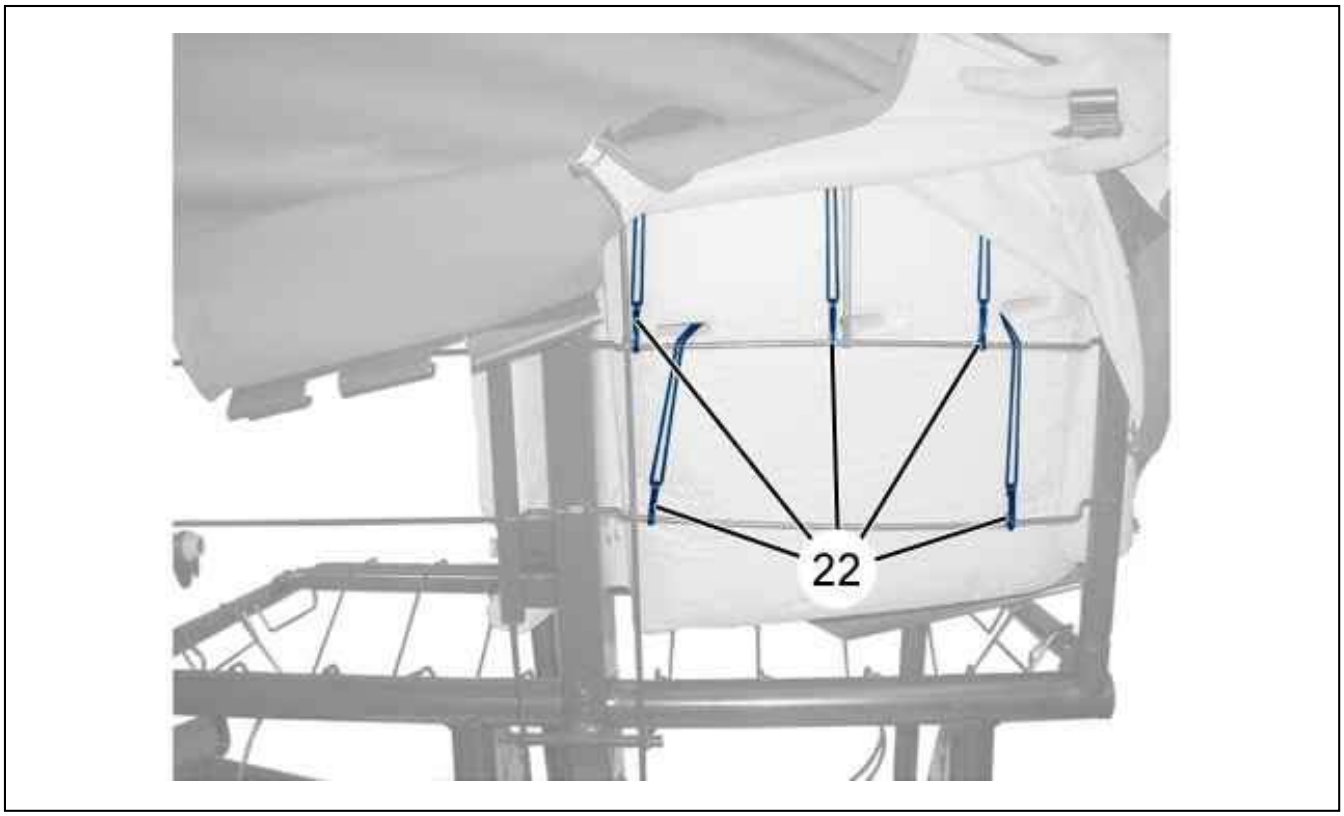

Figure : C5GP0PYD

Unclip the pieces of elastic (22).

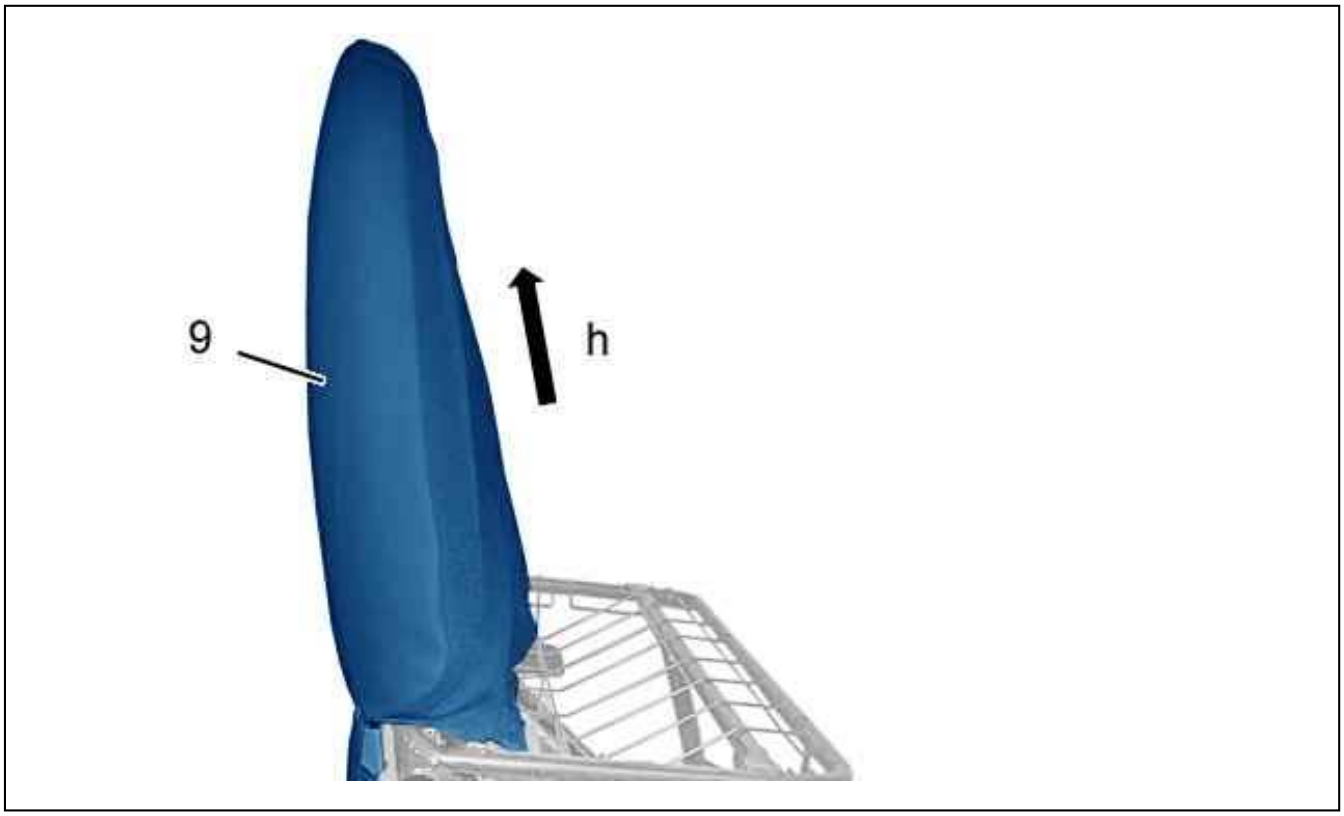

Figure : C5GS1HLD

Remove the backrest cover (9) (following "h").

3. Re-assembling

Carry out the re-trim operations in the reverse order to the stripping operations.
Refit the front passenger benchseat .

STRIPPING - RE-ASSEMBLING : REAR BENCH SEAT (ROW 2)

ESSENTIAL : Observe the safety and cleanliness recommendations.

1. Recommended tools

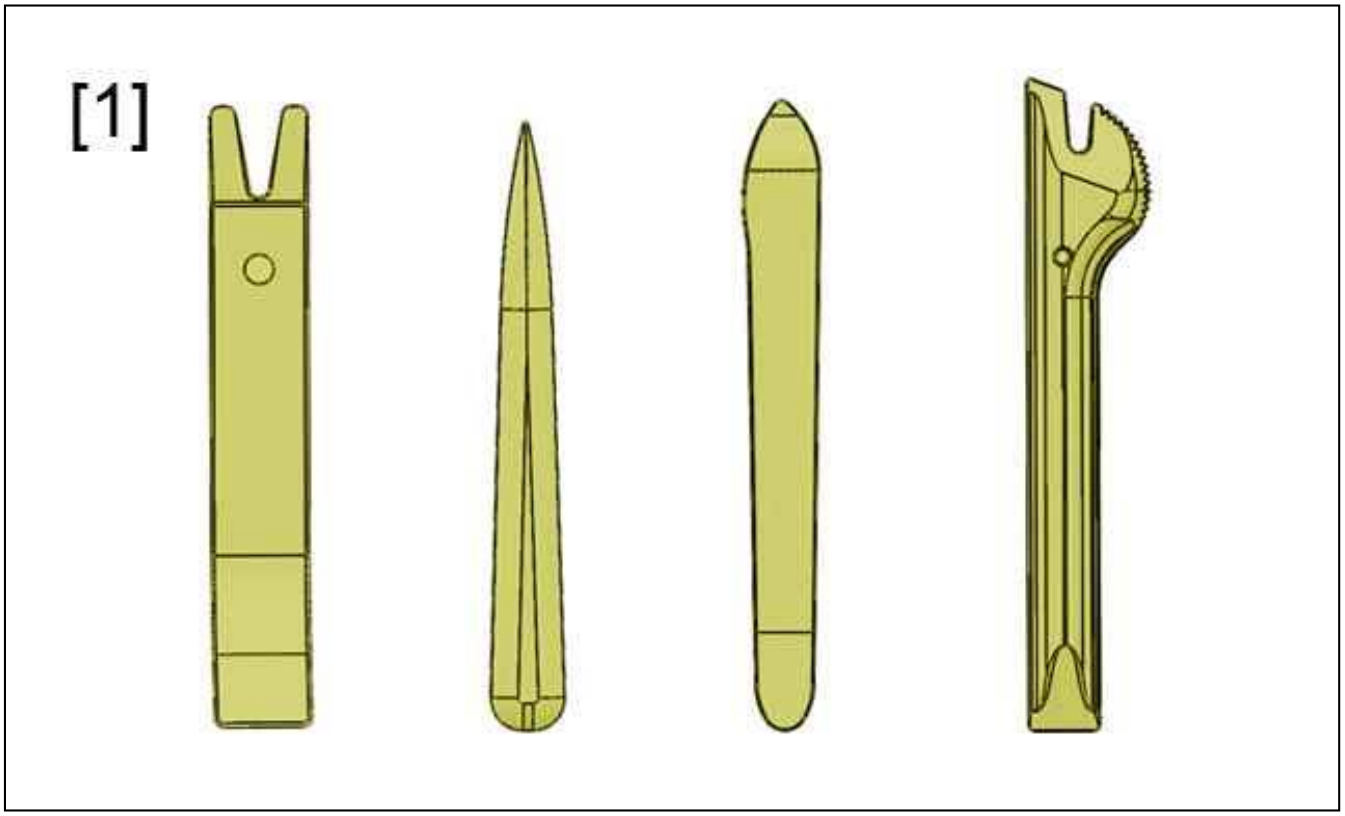

Figure : E5AP30WD

[1] Stripping tool (-).1350-ZZ.

2. Presentation



Figure : C5GM0DGD

(1) Tipping right-hand seat.
(2) Central seat.
(3) Seat (L.H. side).

3. Stripping

Remove the rear seats (Row 2).

3.1. Seat mounting

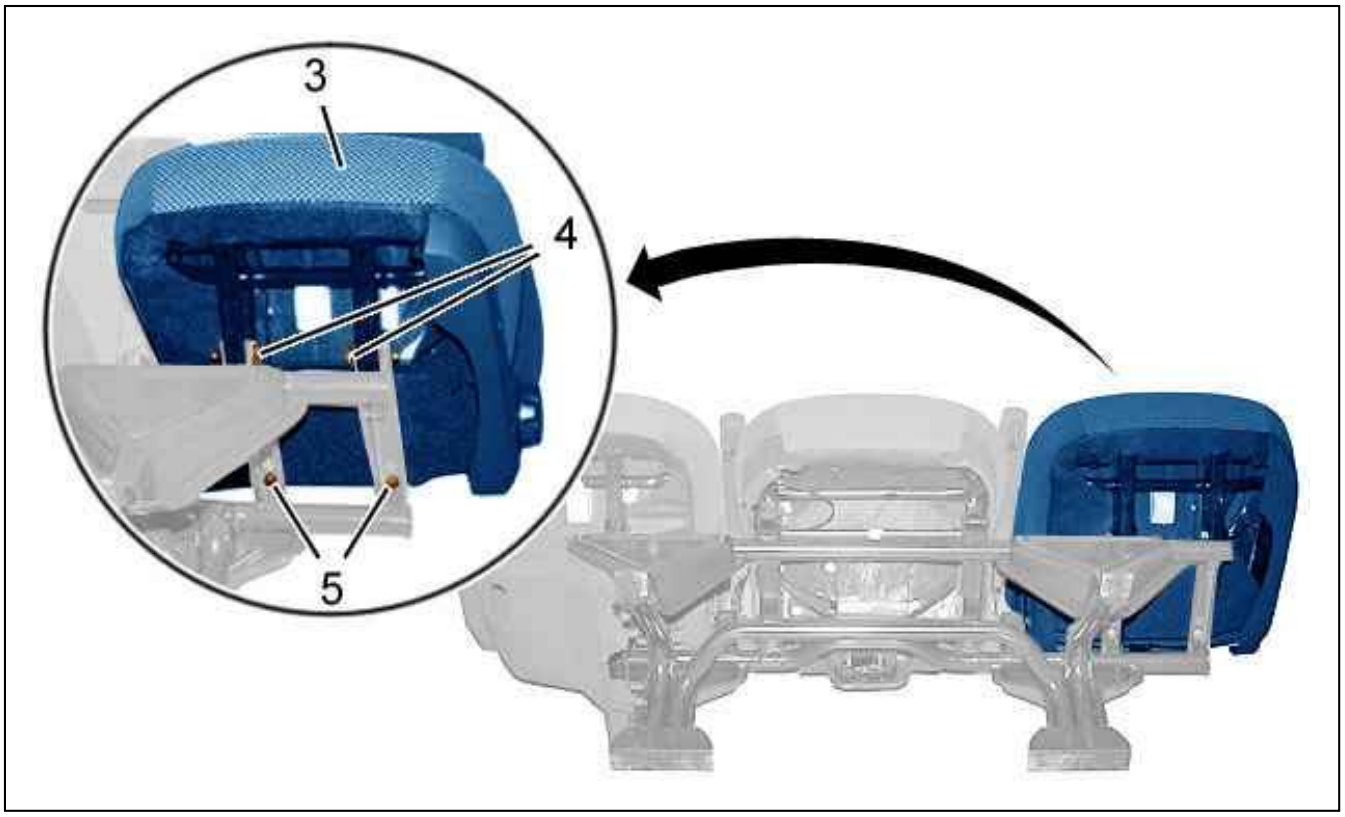

Figure : C5GM0DHD

Remove :

- The bolts (4)
- The nuts (5)
- The seat (3) (L.H. side)

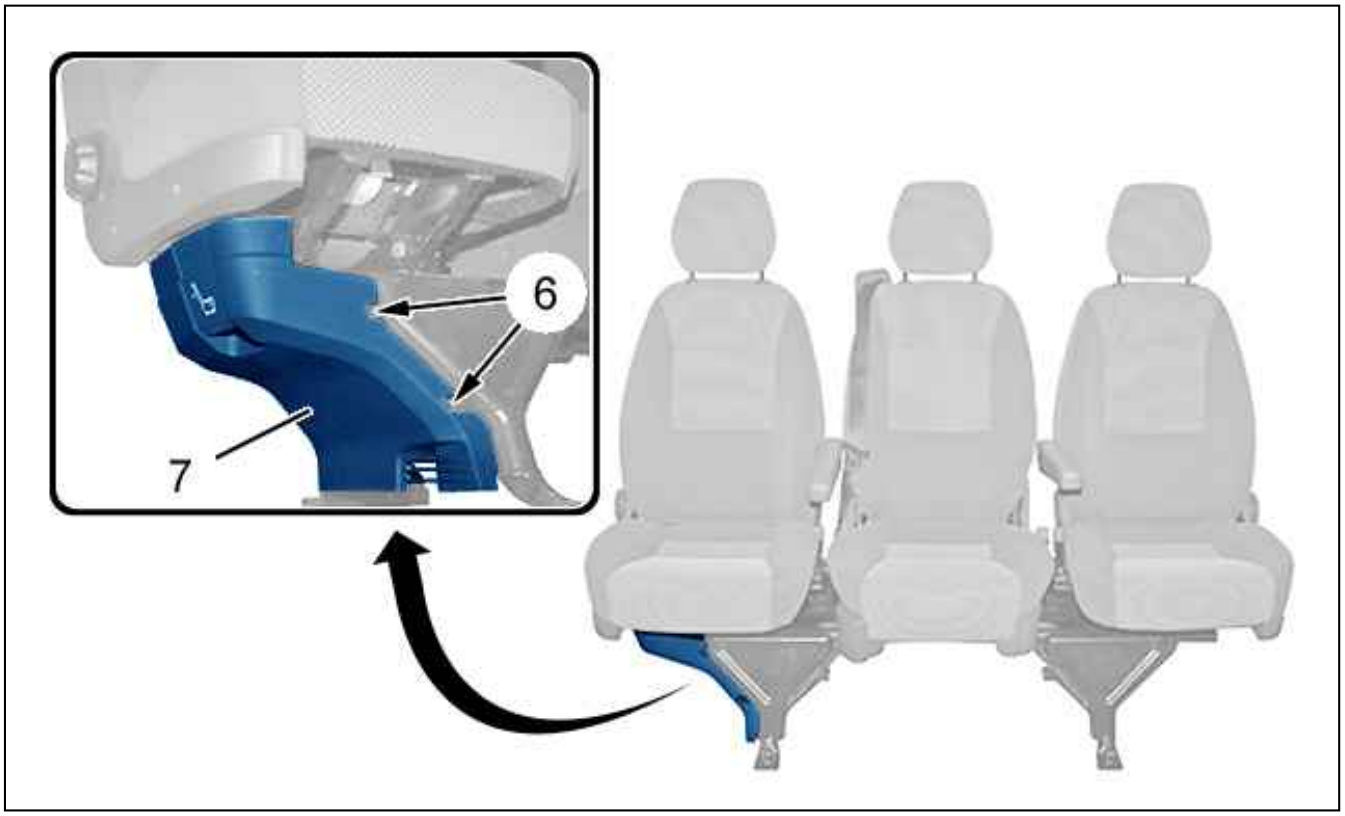

Figure : C5GM0DJD

Remove :

- The bolts (6) (Symmetrical operation)
- The trim (7)

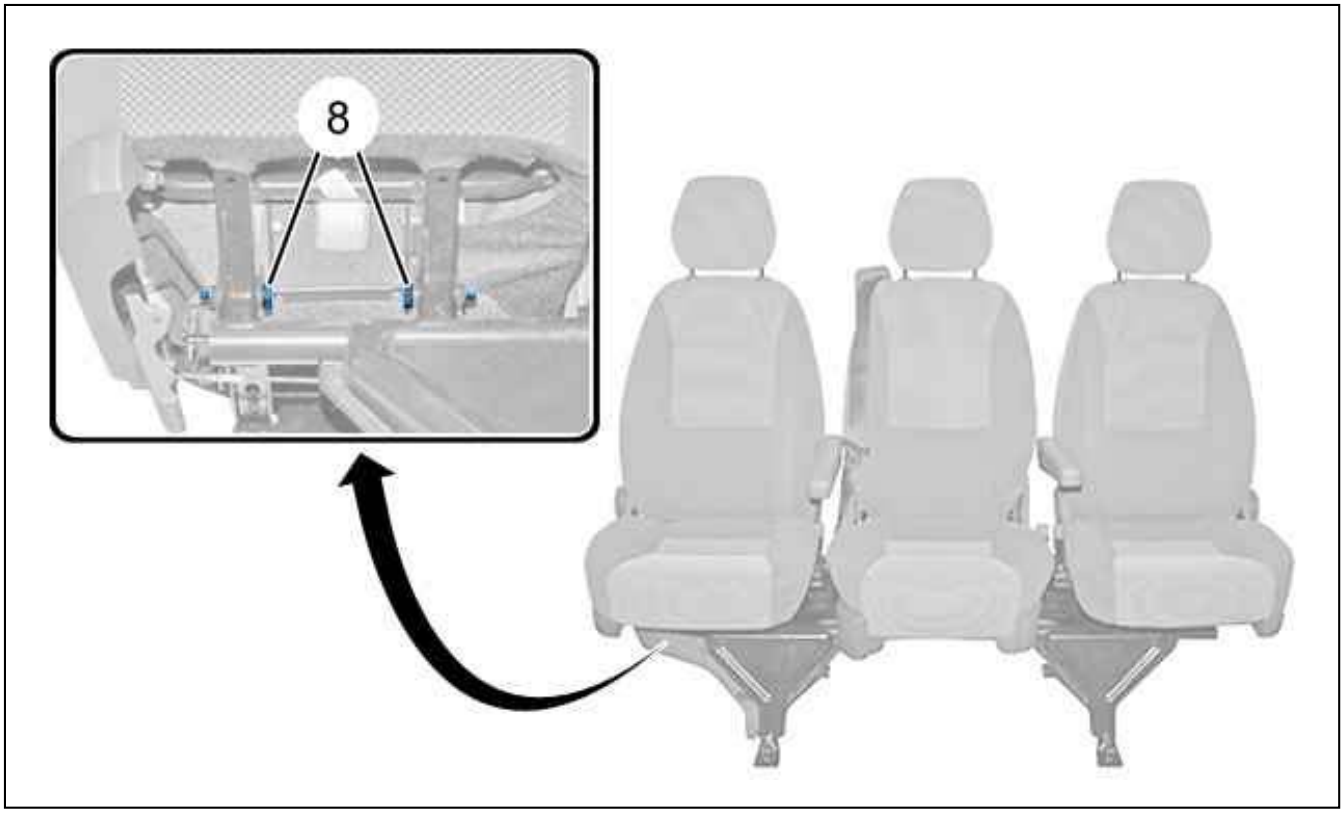

Figure : C5GM0DKD

Remove the bolts (8).

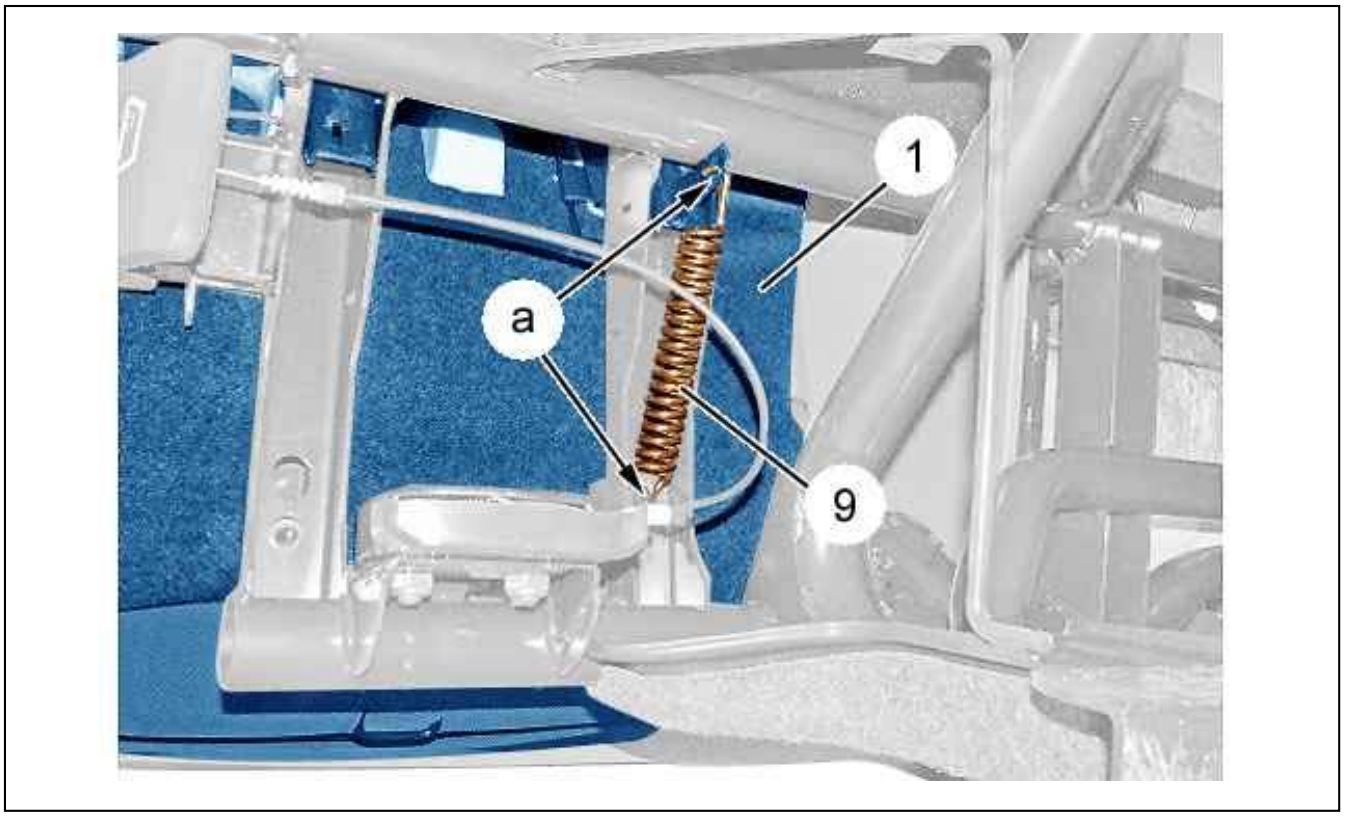

Figure : C5GM0DLD

N.B. : To remove spring (9), tip the right-hand seat (1) as far as possible.

Detach the spring (9) (at "a") ; Carefully.
Remove :

- The spring (9)
- The tipping right-hand seat (1)

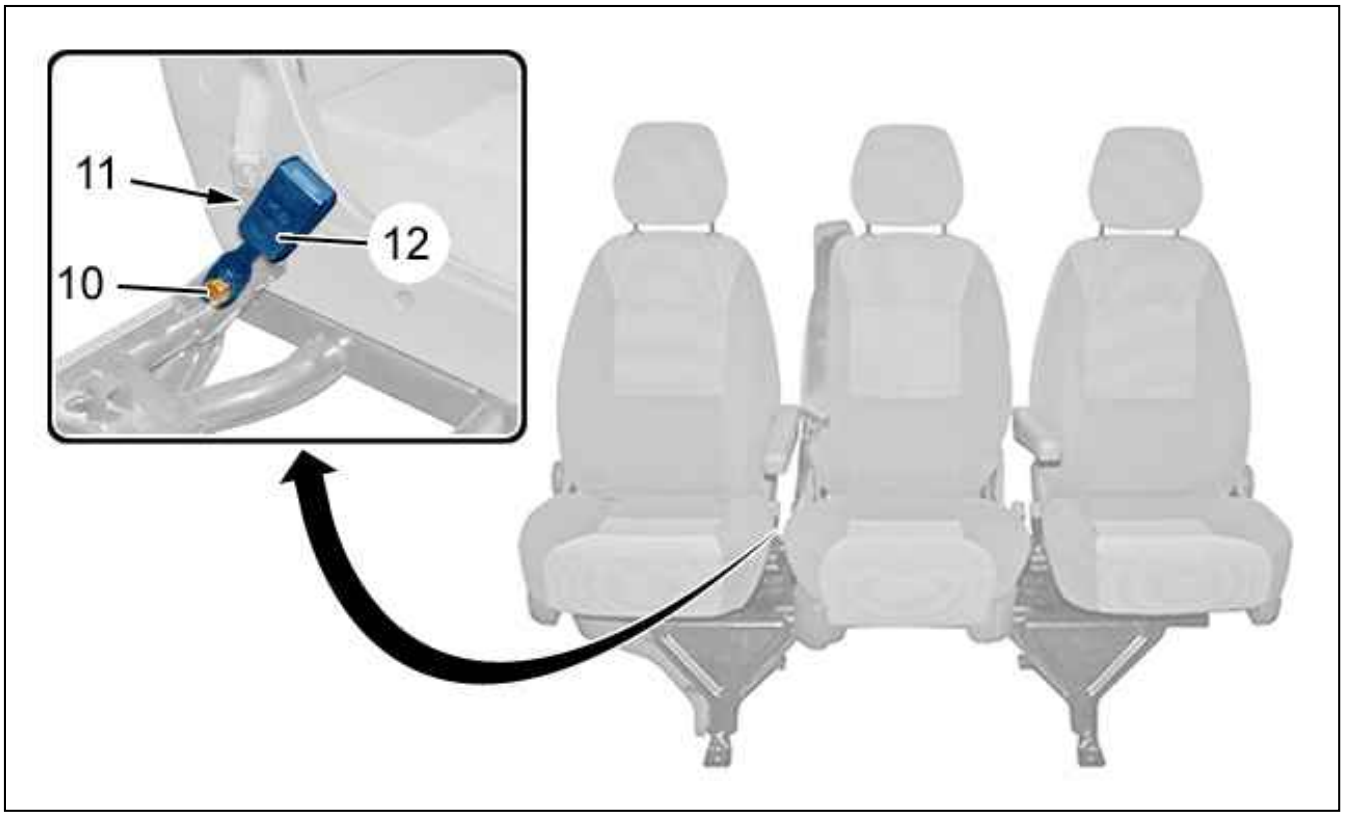

Figure : C5GM0DMD

Remove :

- The (10) bolt
- The seat belt attachment (11)
- The seat belt stalk (12)

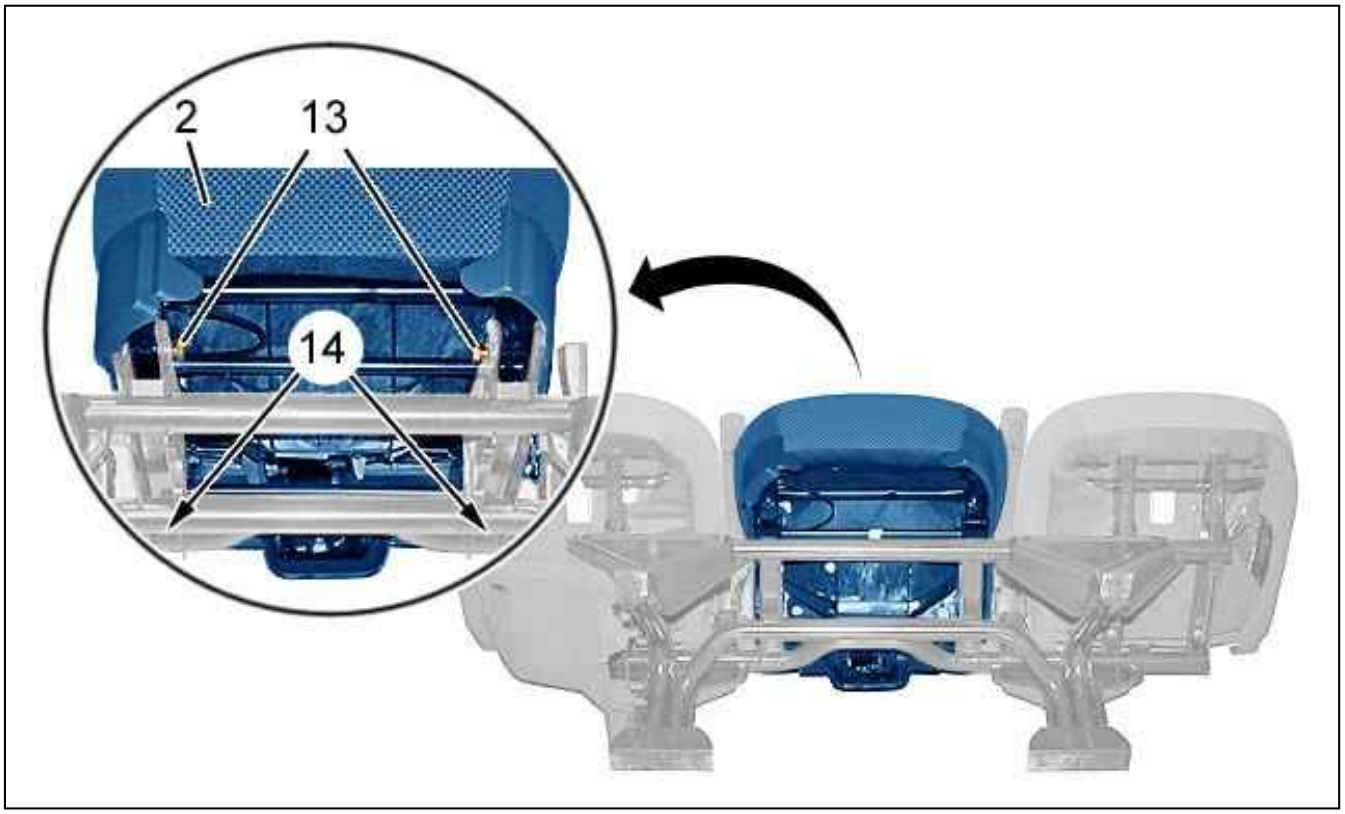

Figure : C5GM0DND

Remove :

- The bolts (13)
- The nuts (14)
- The seat (2) (central)

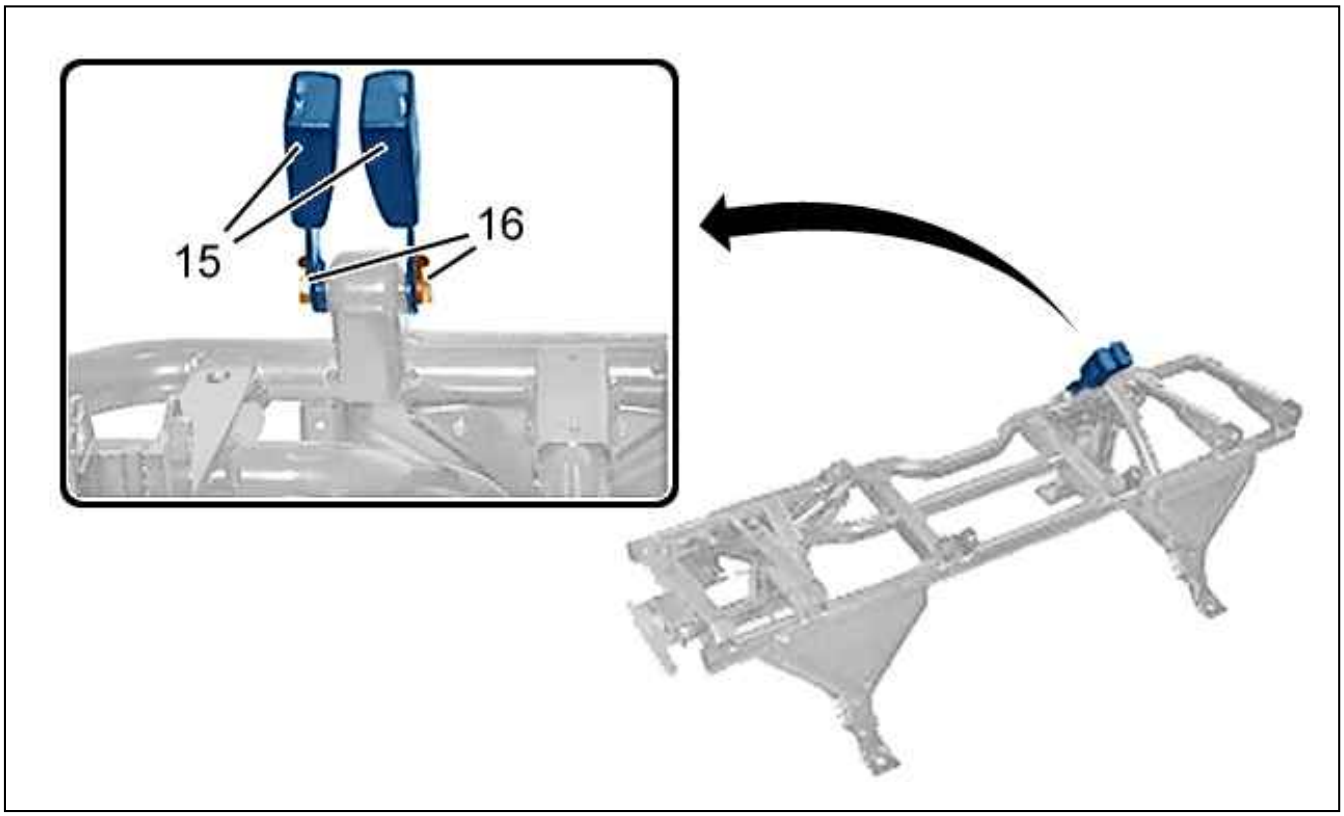

Figure : C5GM0DPD

Remove the bolts (16).
Remove the buckle straps (15).

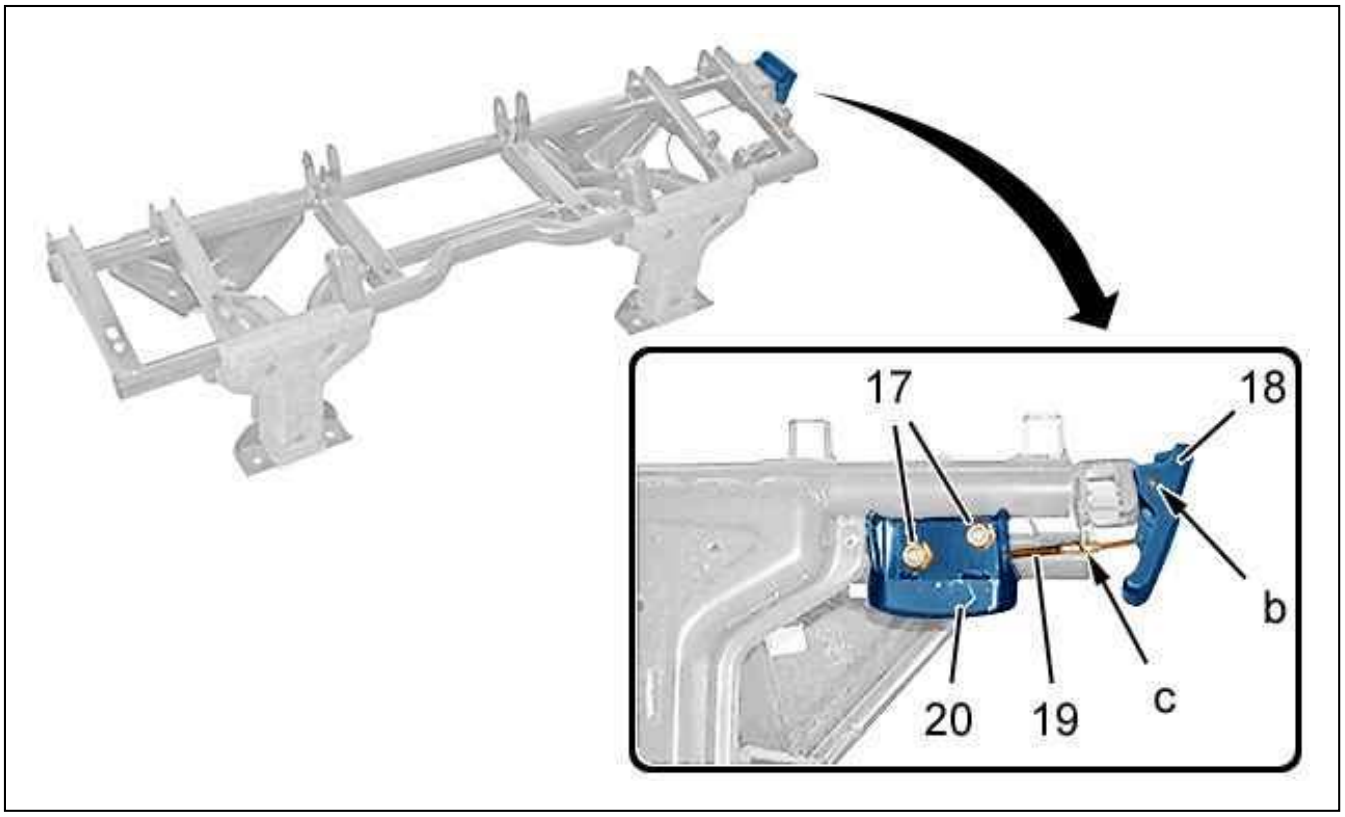

Figure : C5GM0DQD

Remove the bolts (17).
Detach :

- The striker (20)
- The cable guide (19) (at "c")

Unclip the handle (18) (at "b") ; Using tool [1] (Symmetrical operation).

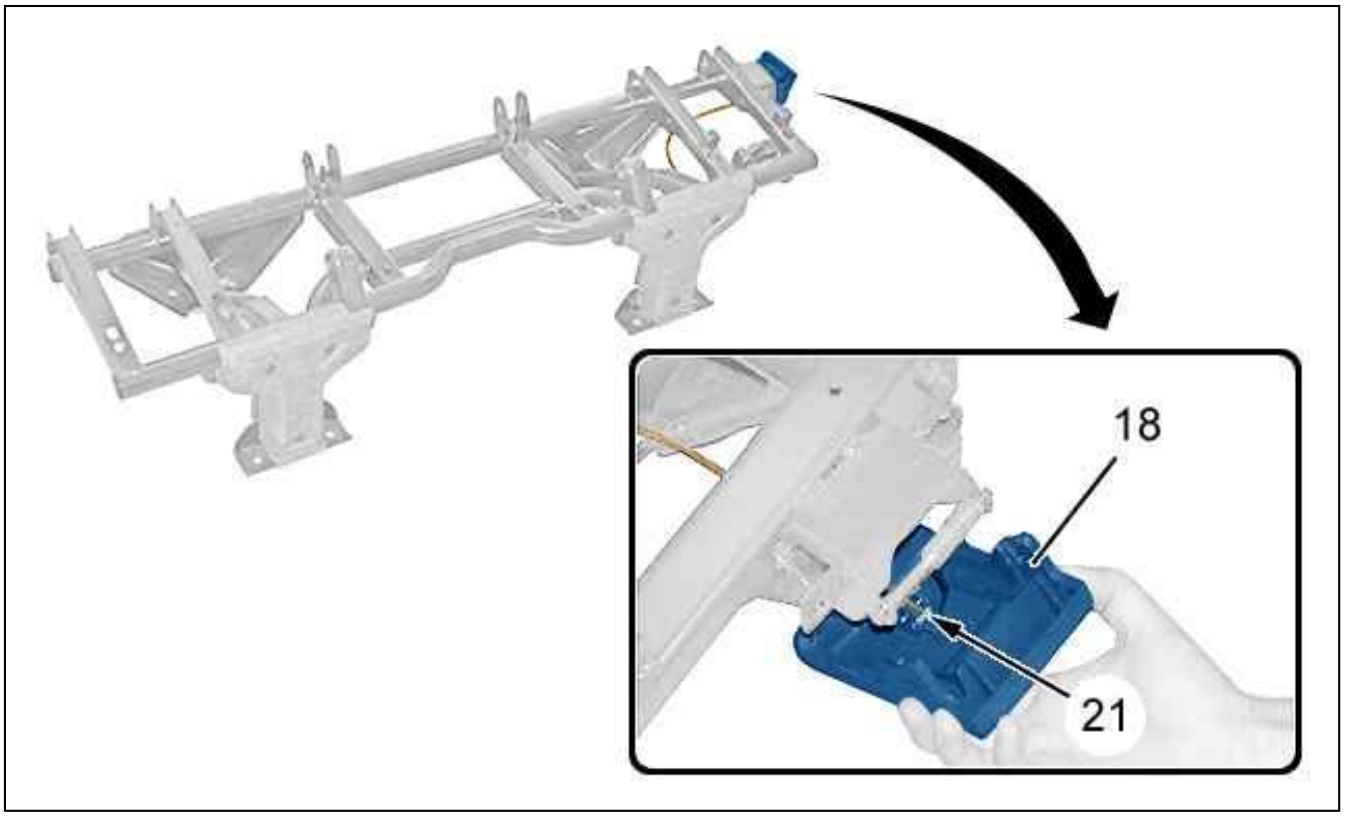

Figure : C5GM0DRD

Unclip the cable (21) ; Using tool [1].
Remove :

- The handle (18)
- The striker (20)

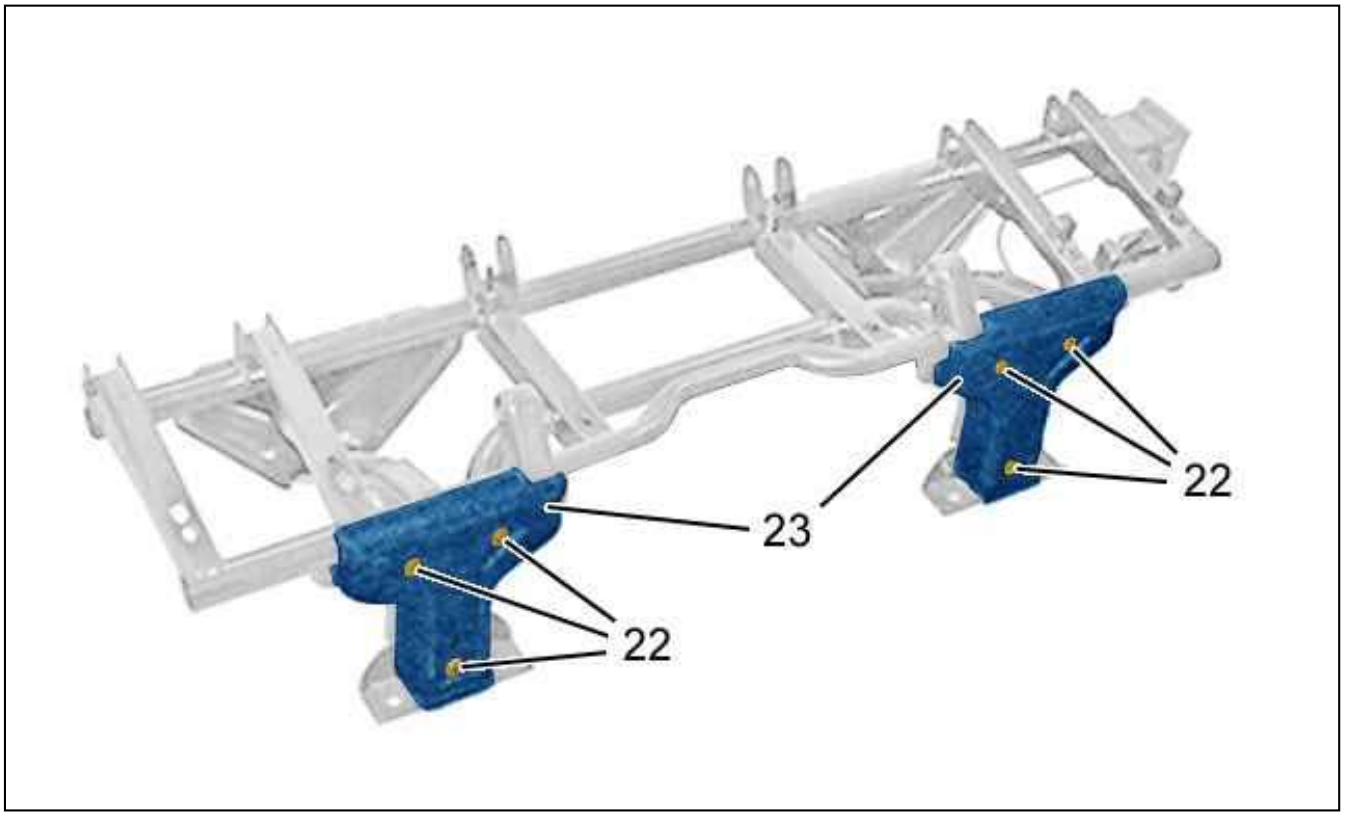

Figure : C5GM0DSD

Unclip the clips (22) ; Using tool [1].
Remove the trims (23).

3.2. The seat (L.H. side)

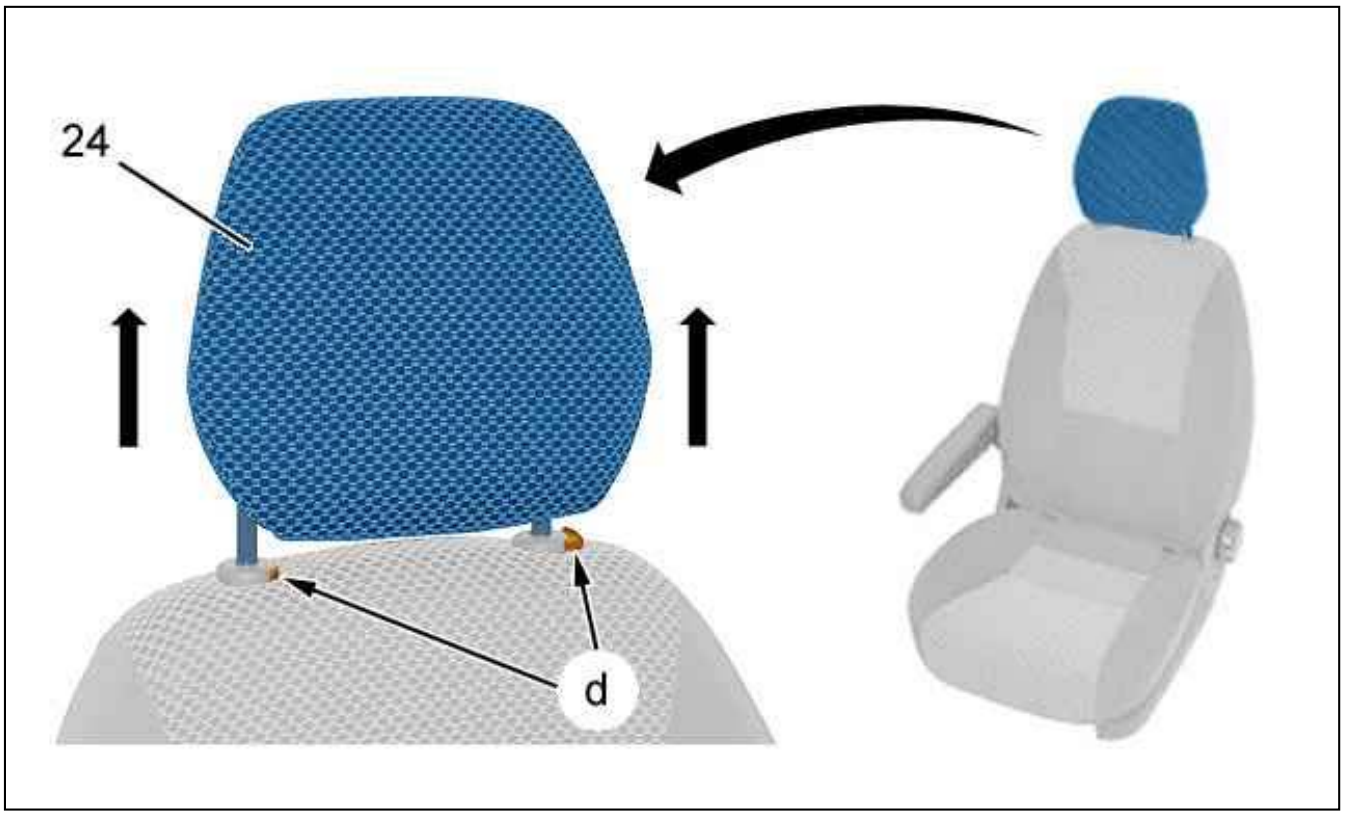

Figure : C5GM0DTD

Unclip : The head restraint (24) (at "d").
Remove the head restraint (24) (as per arrows).

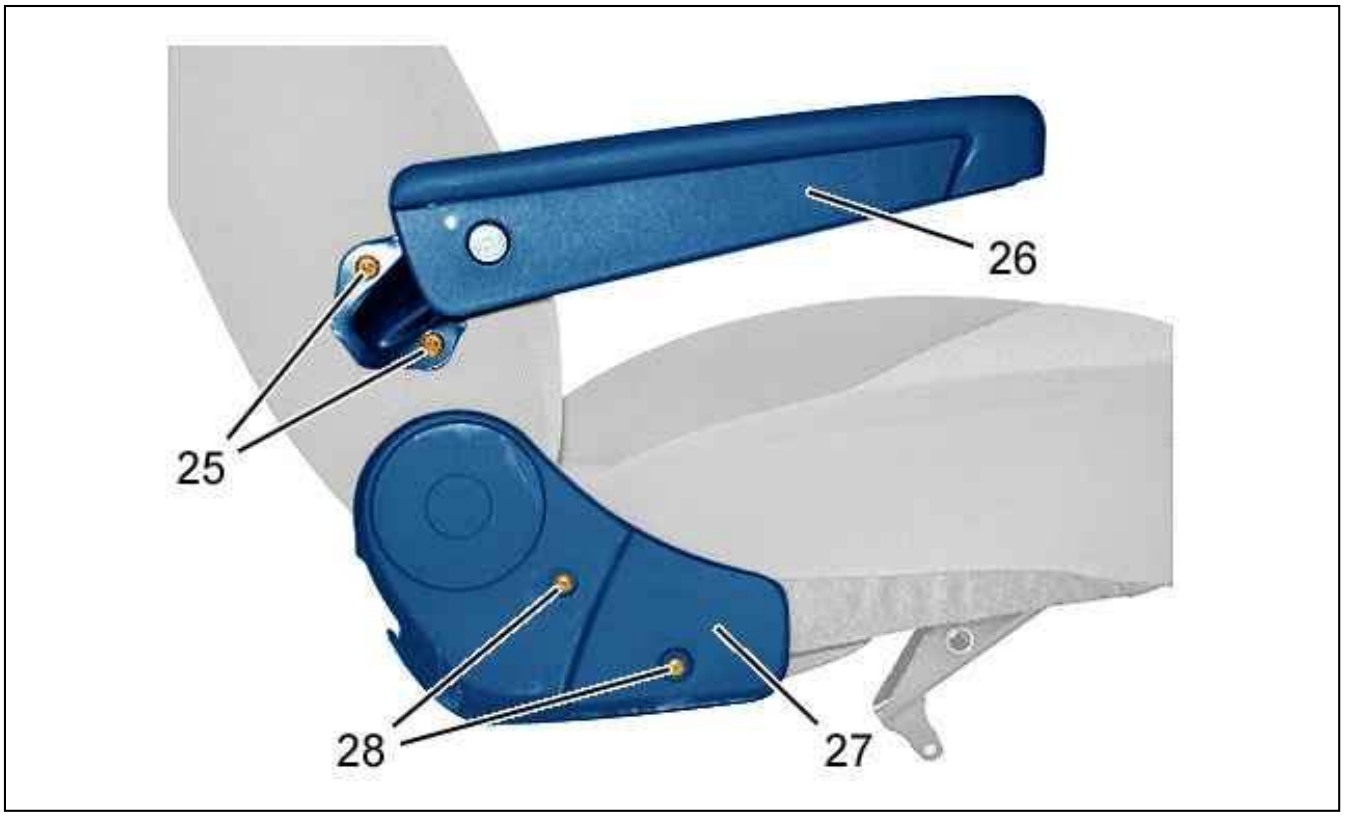

Figure : C5GM0DUD

Remove :

- The bolts (25), (28)
- Armrest (26)
- The left-hand lower trim (27)

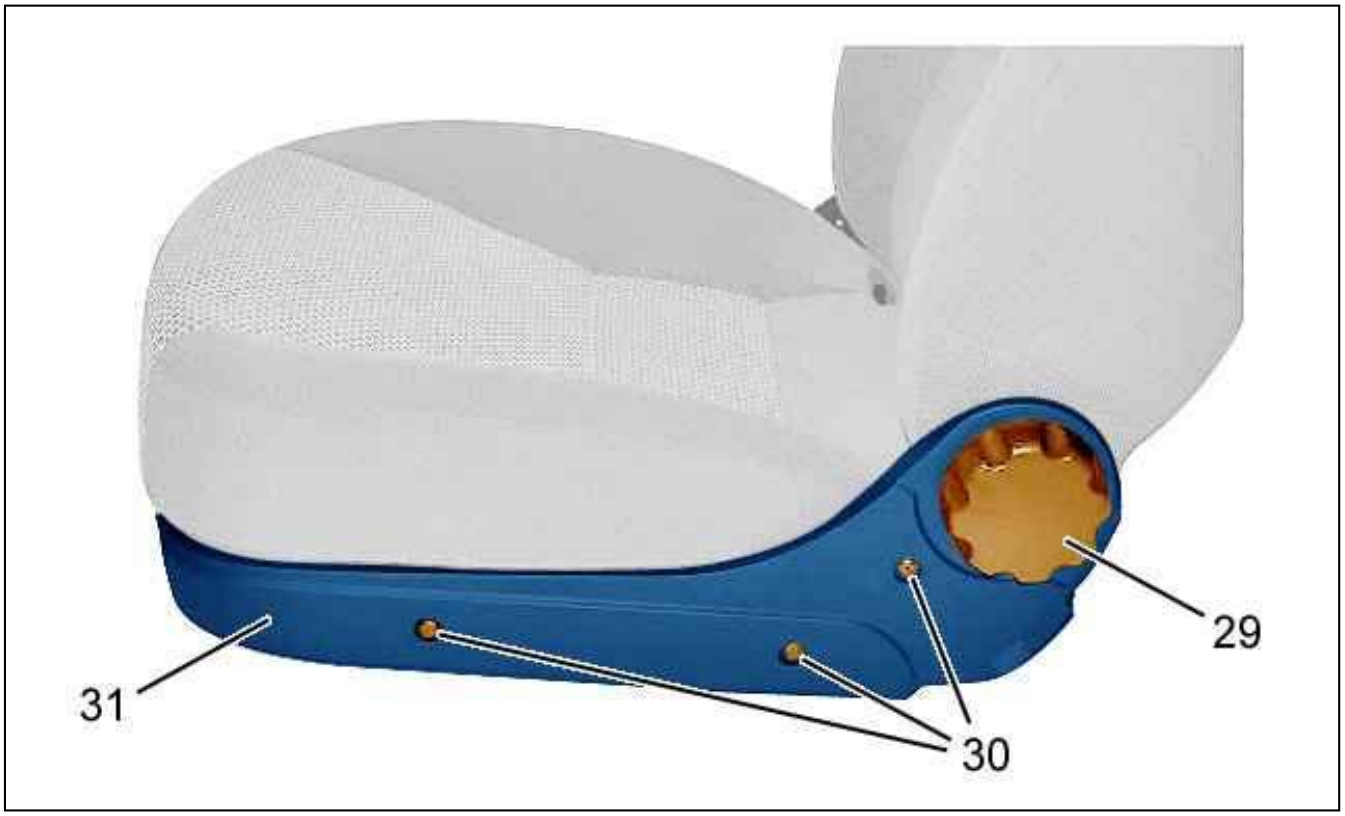

Figure : C5GM0DVD

Unclip : The knurled wheel (29) ; Using tool [1].

Remove :

- The knurled wheel (29)
- The bolts (30)
- The left-hand lower trim (31)



Figure : C5GM0DWD

Unclip : The backrest cover (32) (at "e") ; Using tool [1].

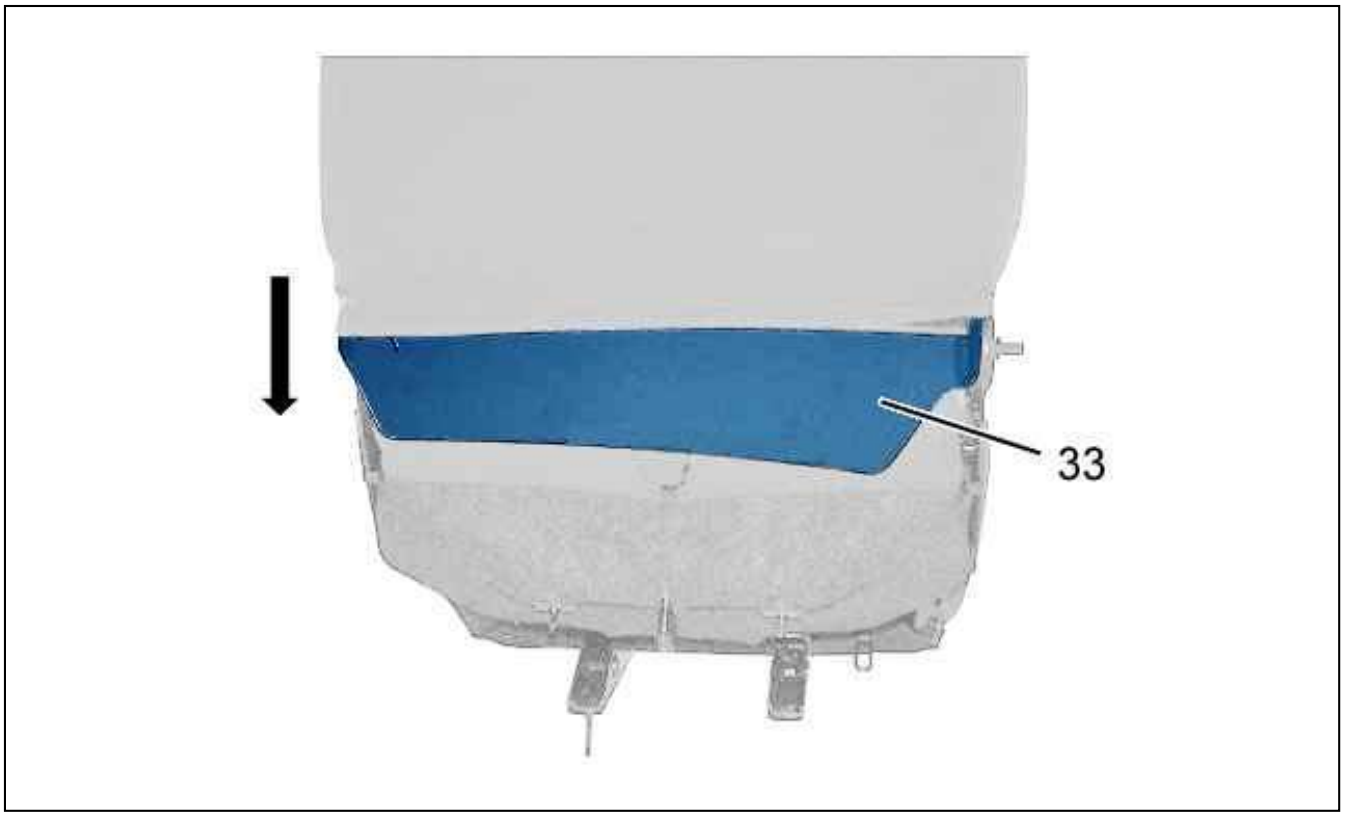

Figure : C5GM0DXD

Remove the cardboard strengthener (33) (following the arrow).

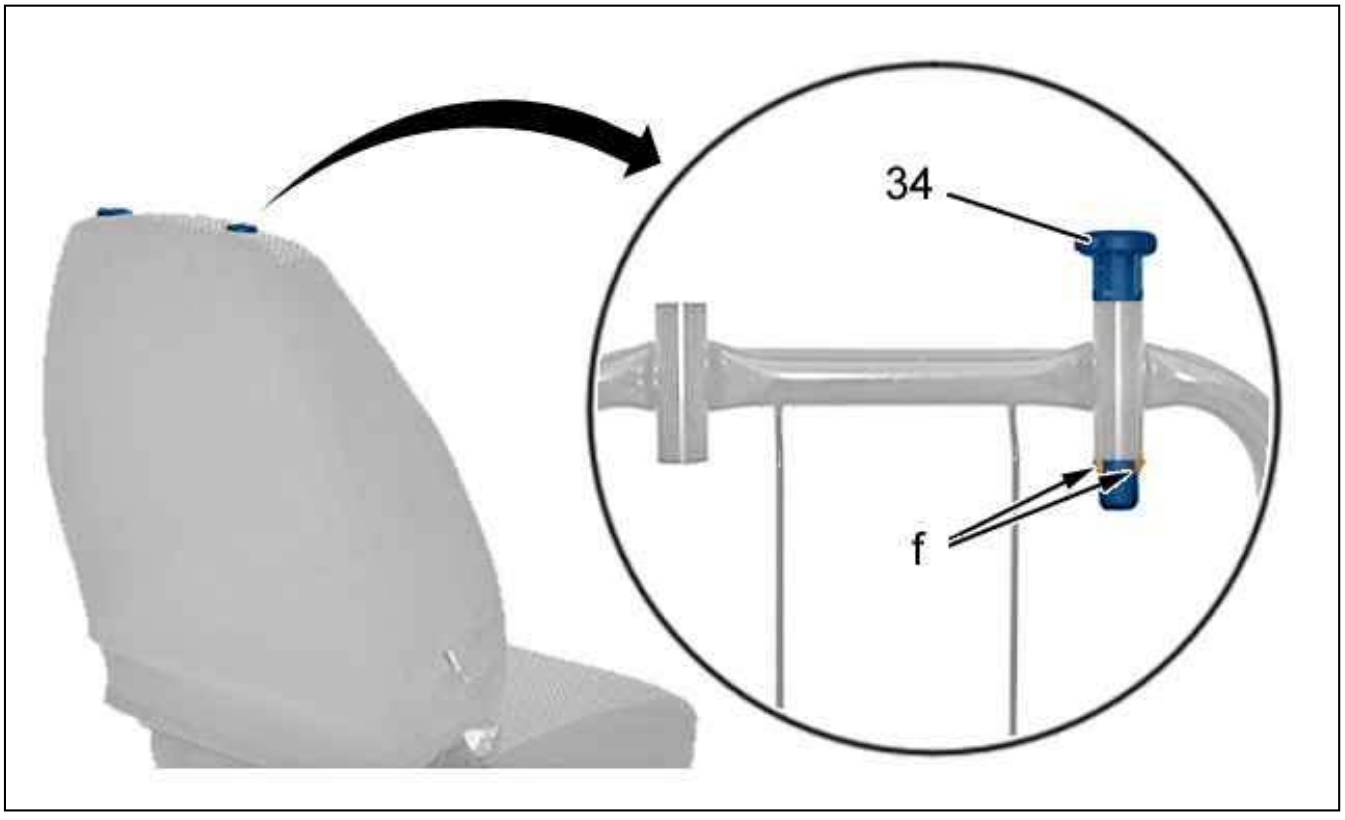

Figure : C5GM0DYD

Unclip : The head restraint guide (34) (at "f") (Symmetrical operation).

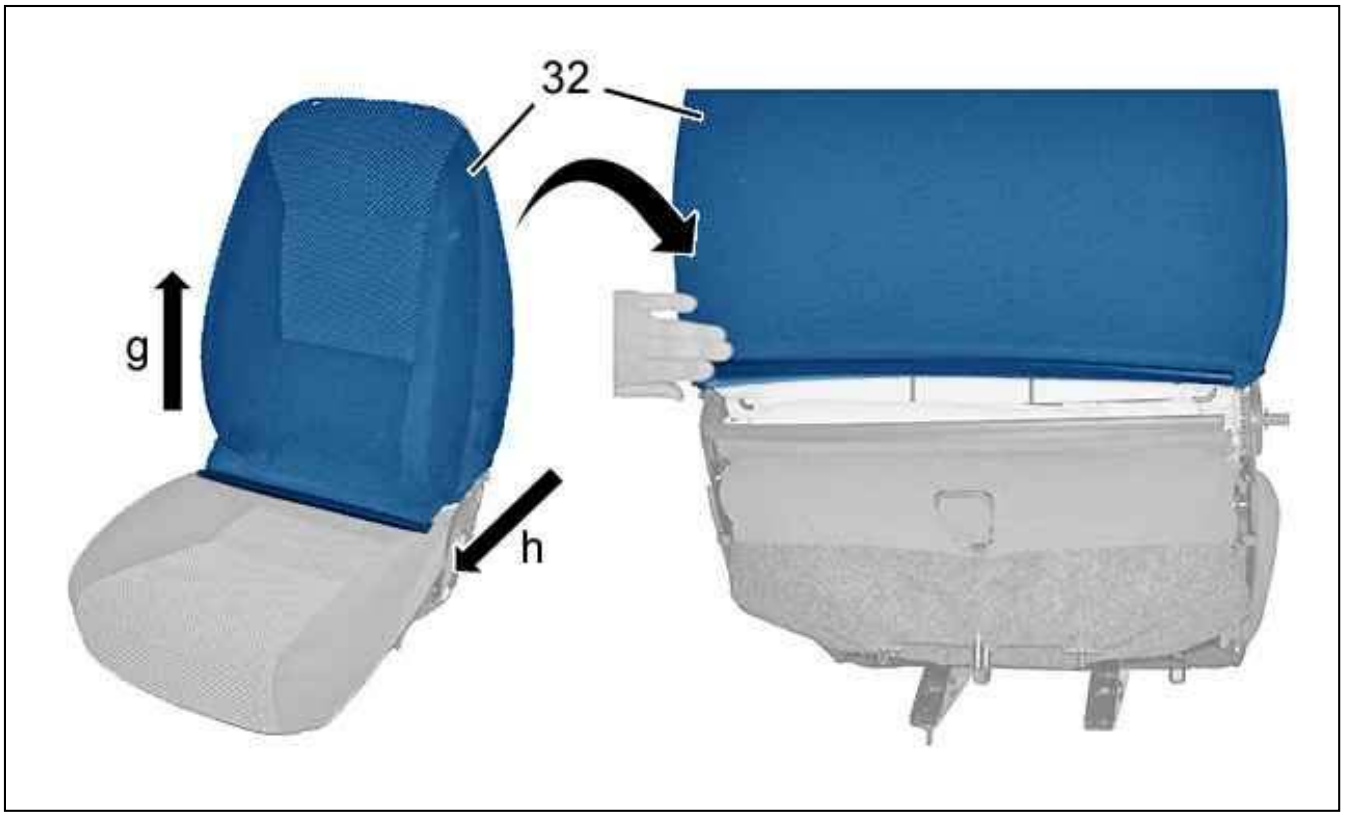

Figure : C5GM0DZD

Detach : The backrest cover (32) (following "h").
Remove the backrest cover (32) (following "g").



Figure : C5GM0E0D

Remove : The foam of the seat back (35)(as per arrows).

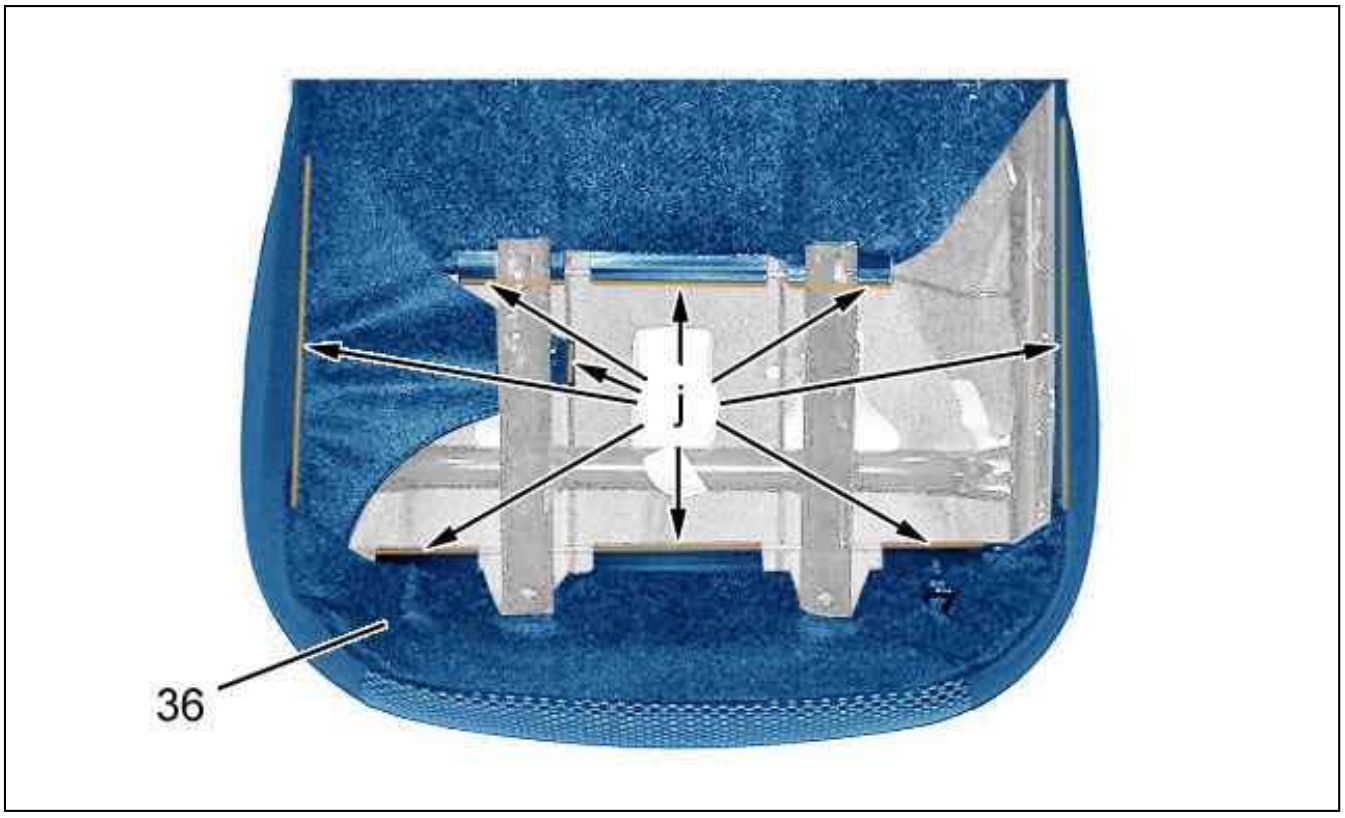

Figure : C5GM0E1D

Unclip : The rear bench covered seat cushion (36) (at "j") ; Using tool [1].

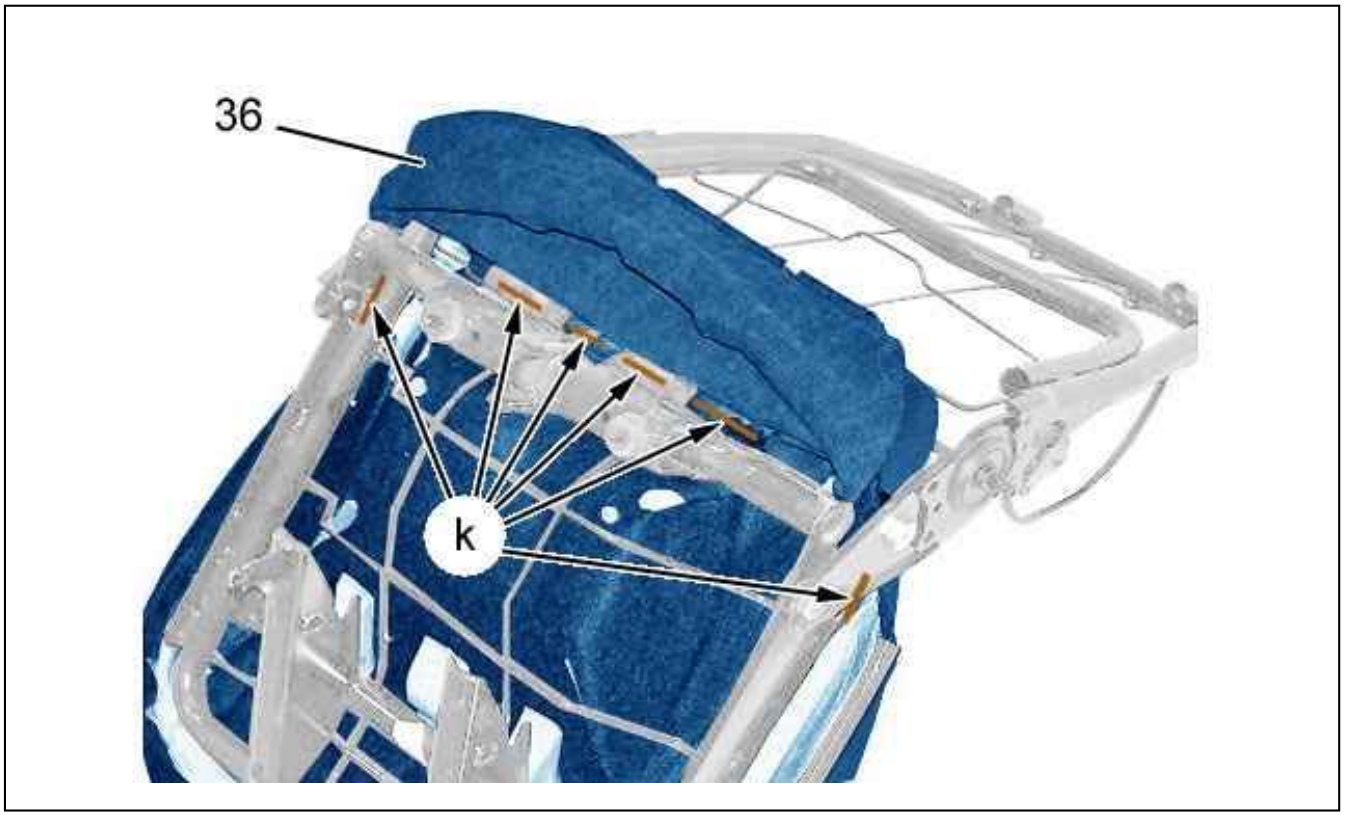

Figure : C5GM0E2D

Unclip : The rear bench covered seat cushion (36) (at "k") ; Using tool [1].

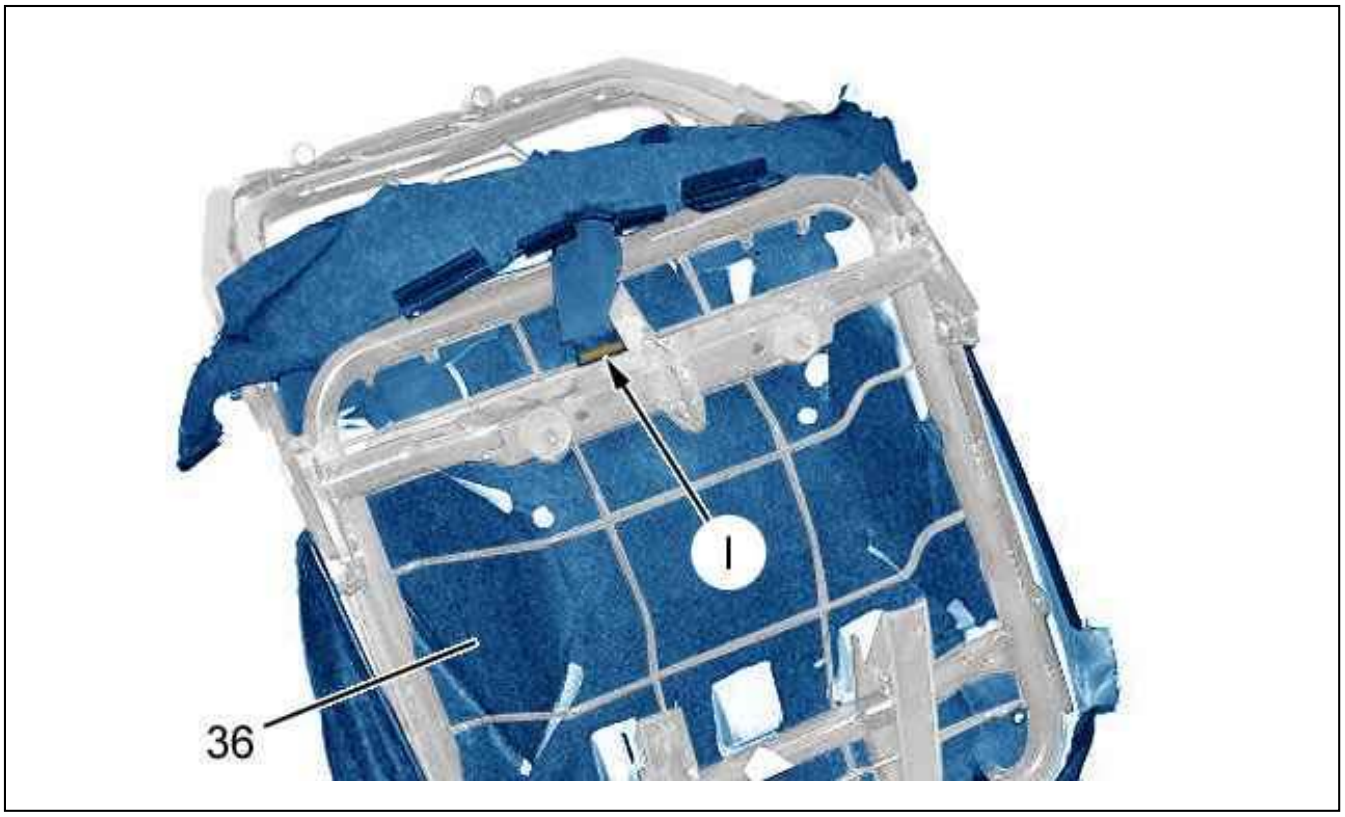

Figure : C5GM0E3D

Unclip : The rear bench covered seat cushion (36) (at "I") ; Using tool [1].

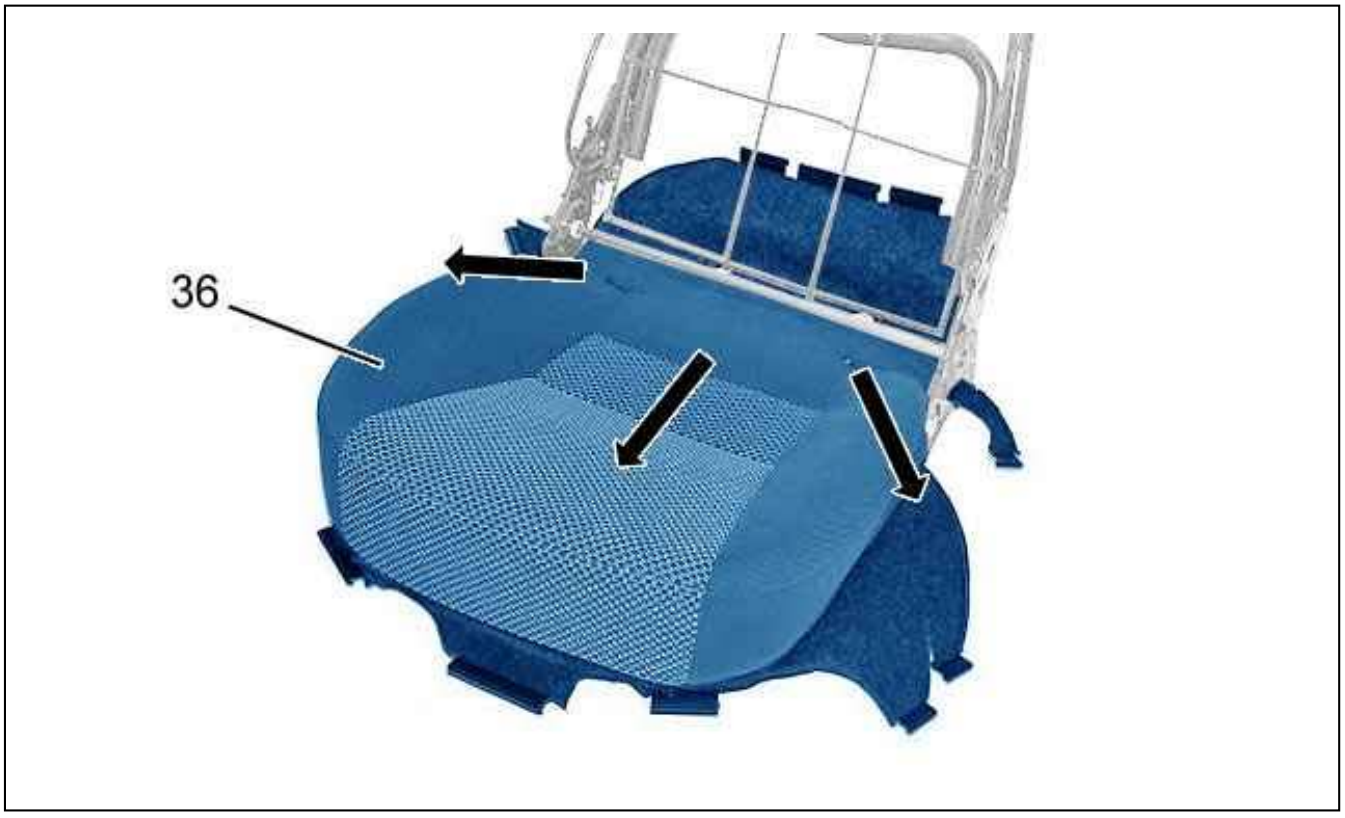

Figure : C5GM0E4D

Detach : The rear bench covered seat cushion (36) (as per arrows).
Remove the covered seat cushion (36).

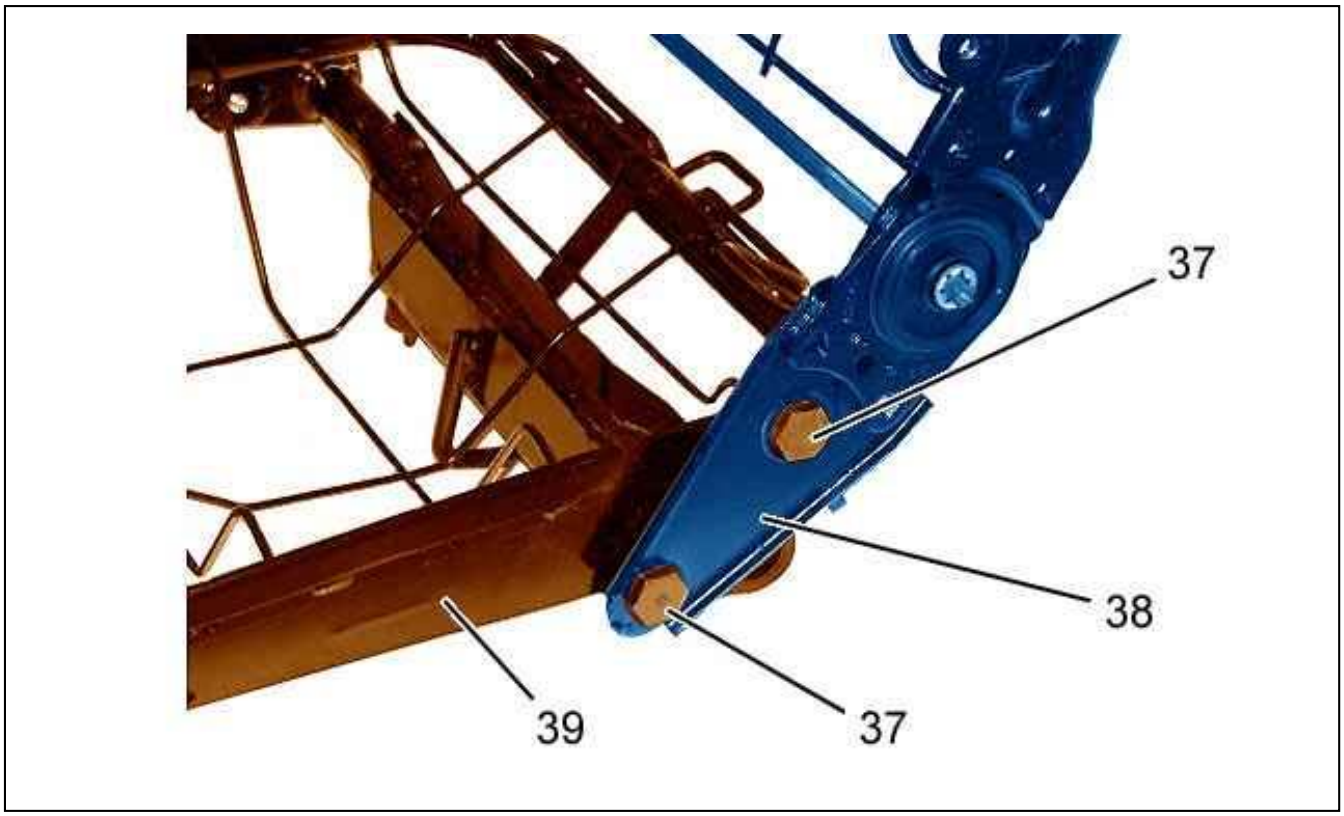

Figure : C5GM0E5D

Remove :

- The bolts (37) (Symmetrical operation)
- The upper frame (38)
- The lower frame (39)

3.3. The tipping right-hand seat

Proceed in the same way as for the left-hand seat.

3.4. The seat (central)

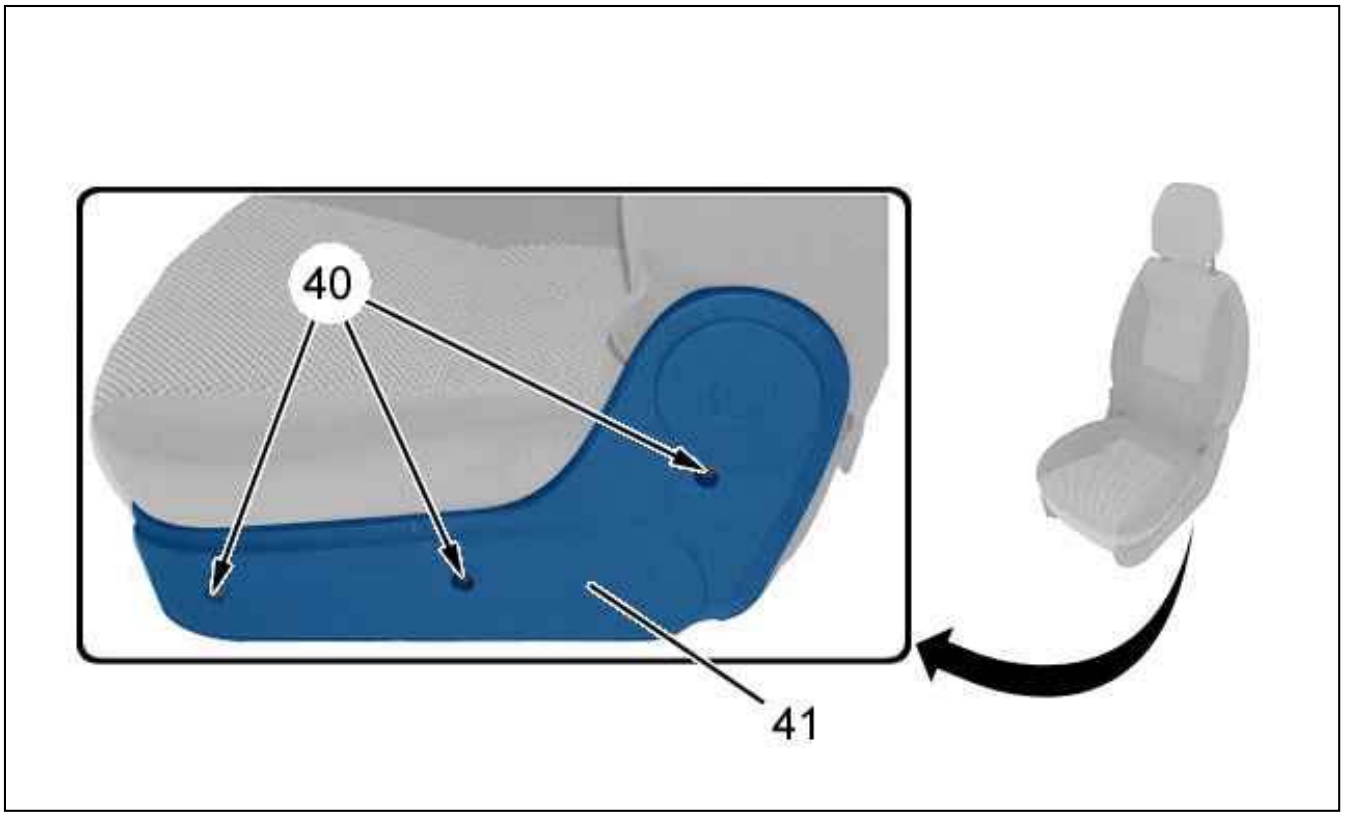

Figure : C5GM0E6D

Remove :

- The bolts (40)
- The left-hand lower trim (41)

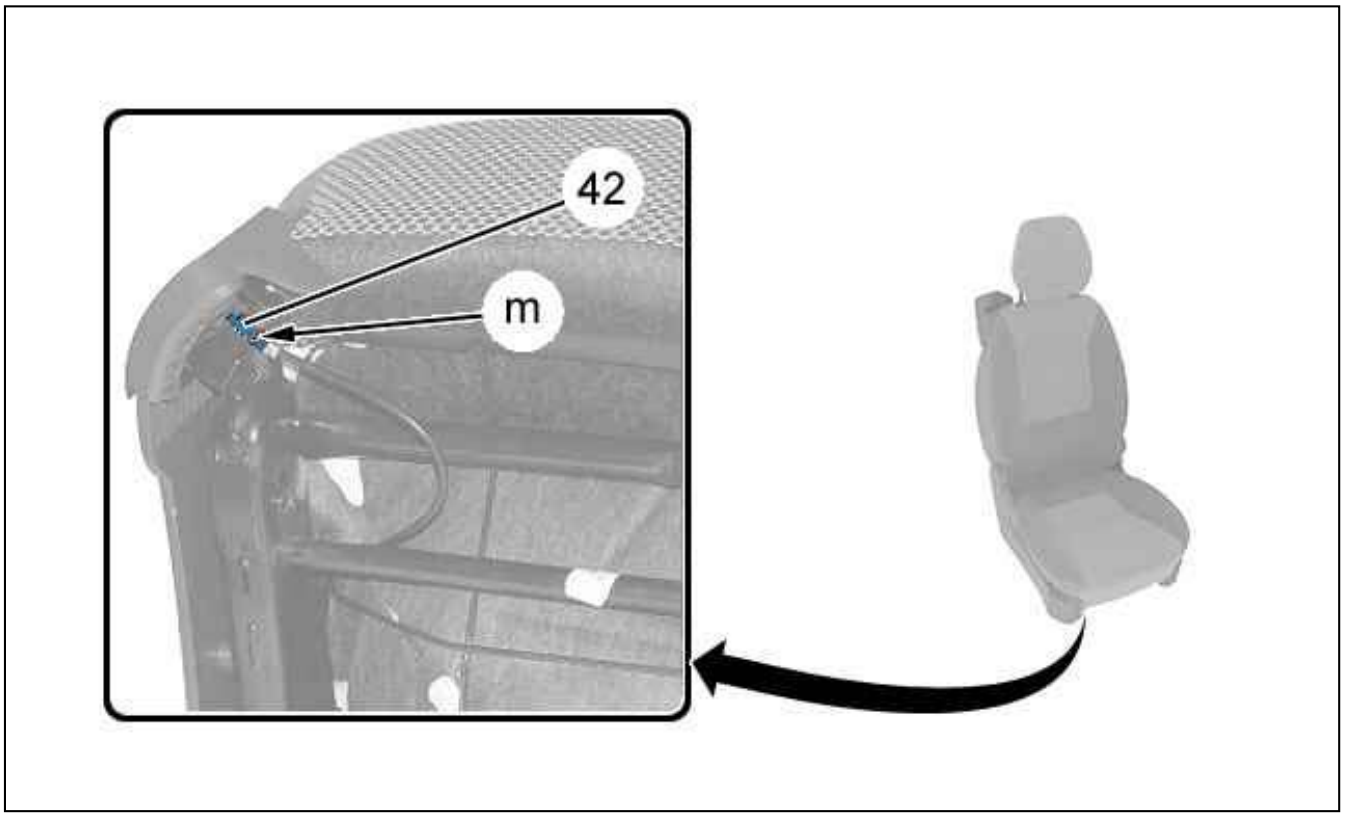

Figure : C5GM0E7D

Unclip : The outer cable stop (42) (at "m").

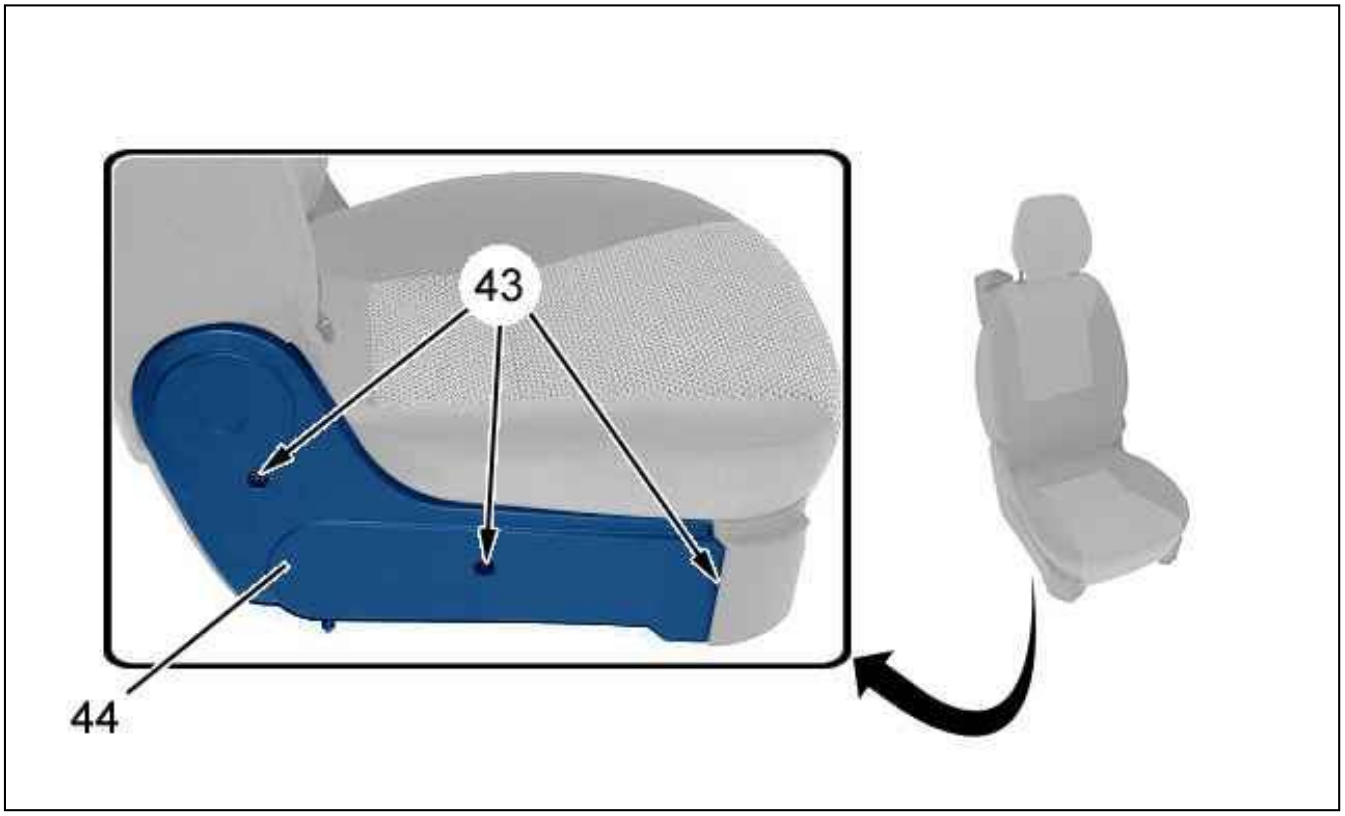

Figure : C5GM0E8D

Remove the bolts (43).
Remove the RH lower lining (44).

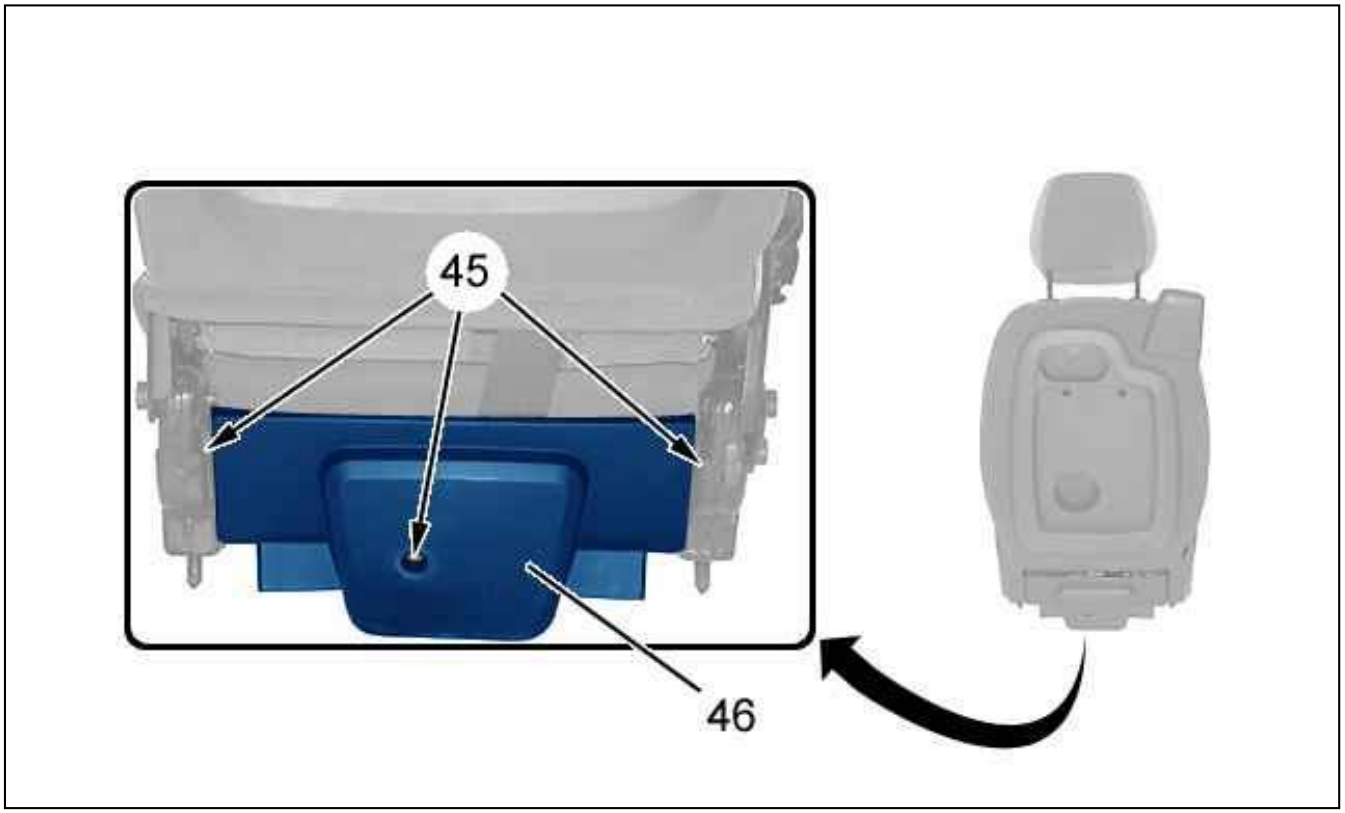

Figure : C5GM0E9D

Remove :

- The bolts (45)
- The bottom trim (rear) (46)

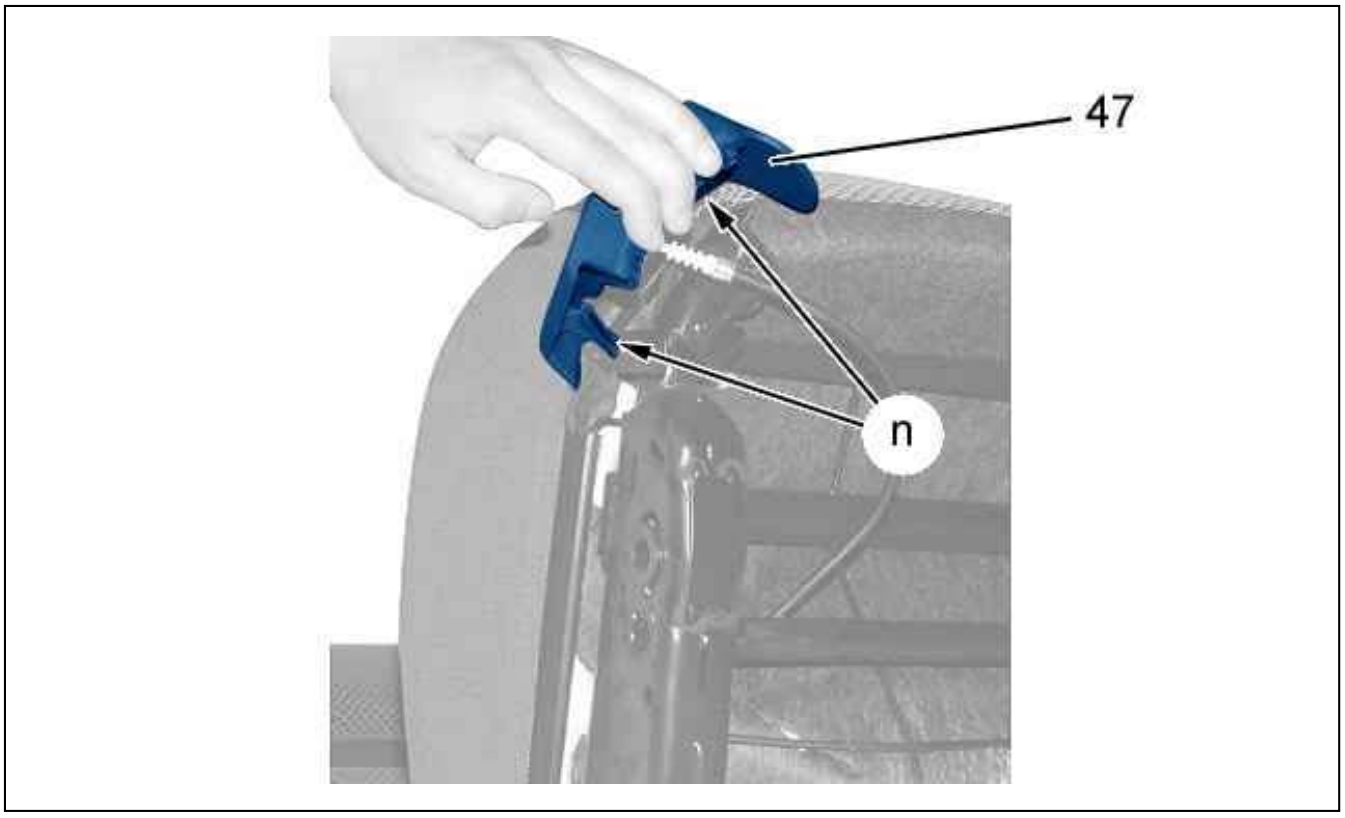

Figure : C5GM0EAD

Unclip - Detach : The handle (47) (at "n").

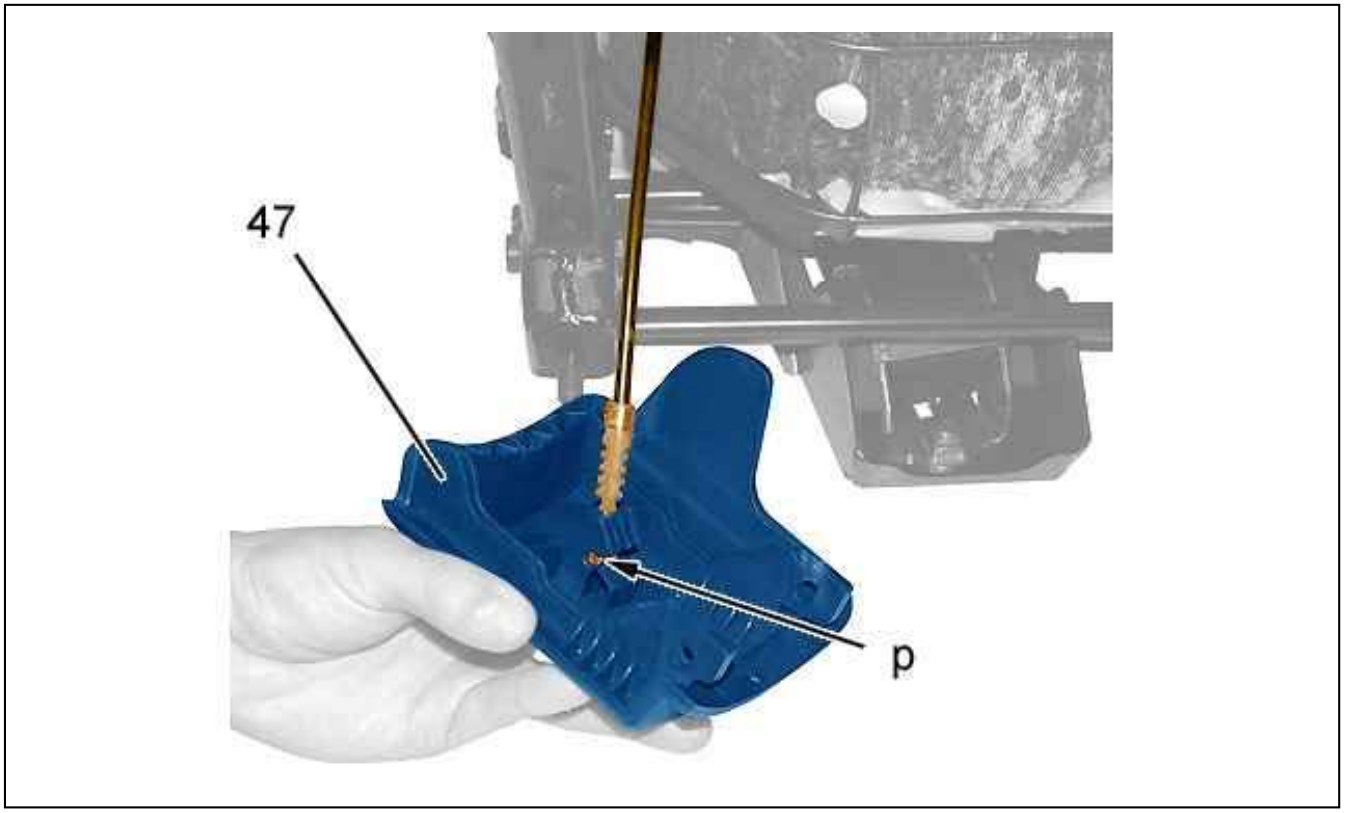

Figure : C5GM0EBD

Release the cable (at "p").
Remove : The handle (47).

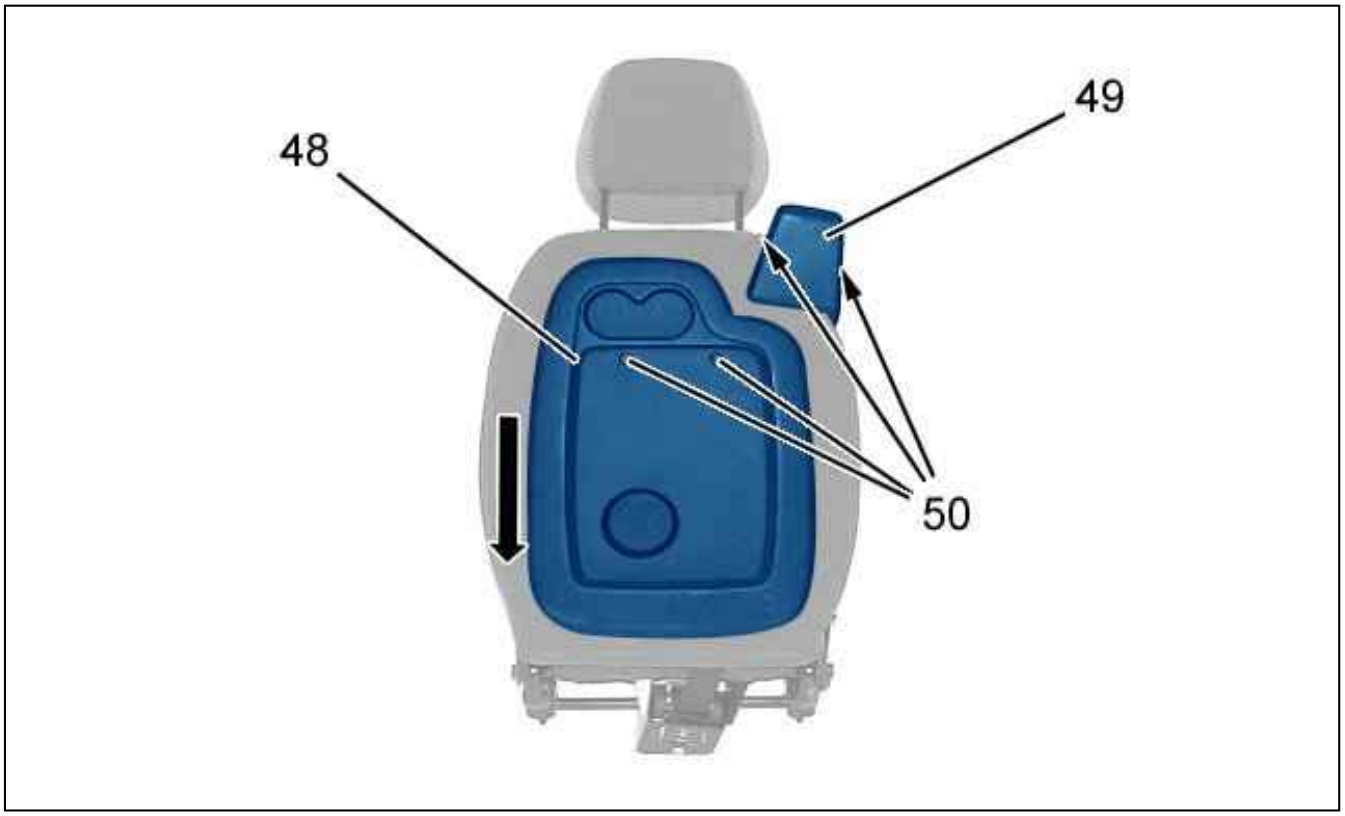

Figure : C5GM0ECD

Remove the bolts (50).
Detach :

- The rear upper trim (48)(following the arrow)
- The seatbelt trim (49)

Remove : The top trim (rear) (48).

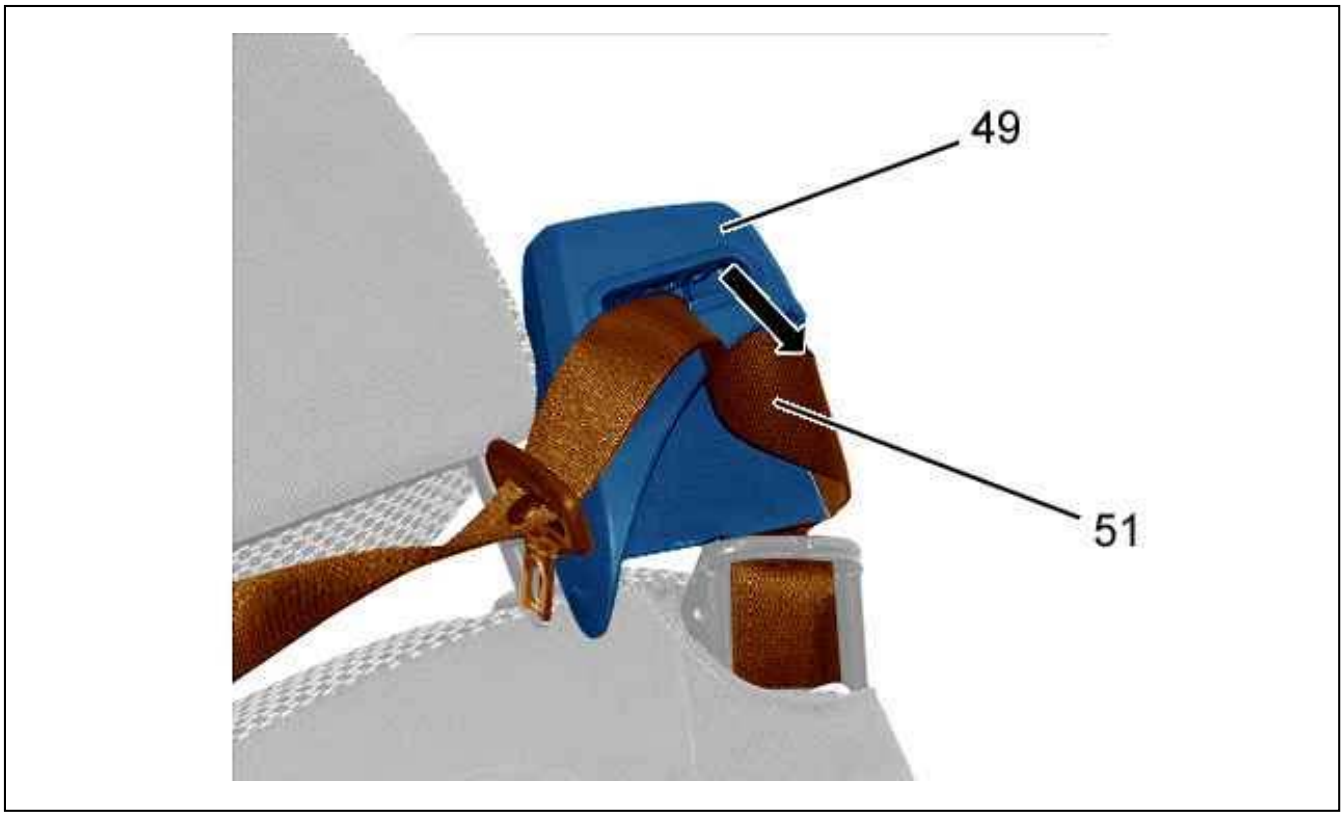

Figure : C5GM0EDD

Detach : The seat belt (51) (following the arrow).
Remove : The seatbelt trim (49).

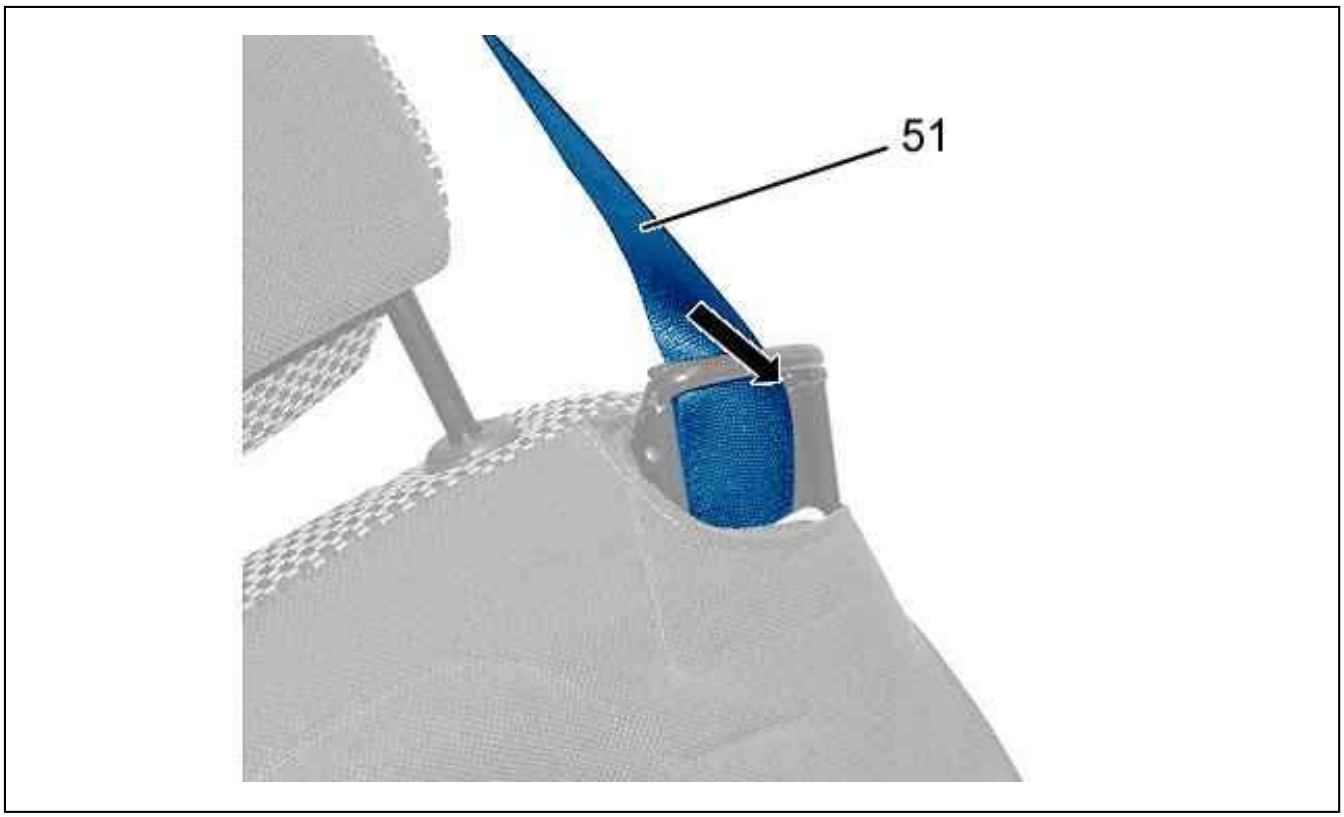

Figure : C5GM0EED

Detach : The seat belt (51) (following the arrow).

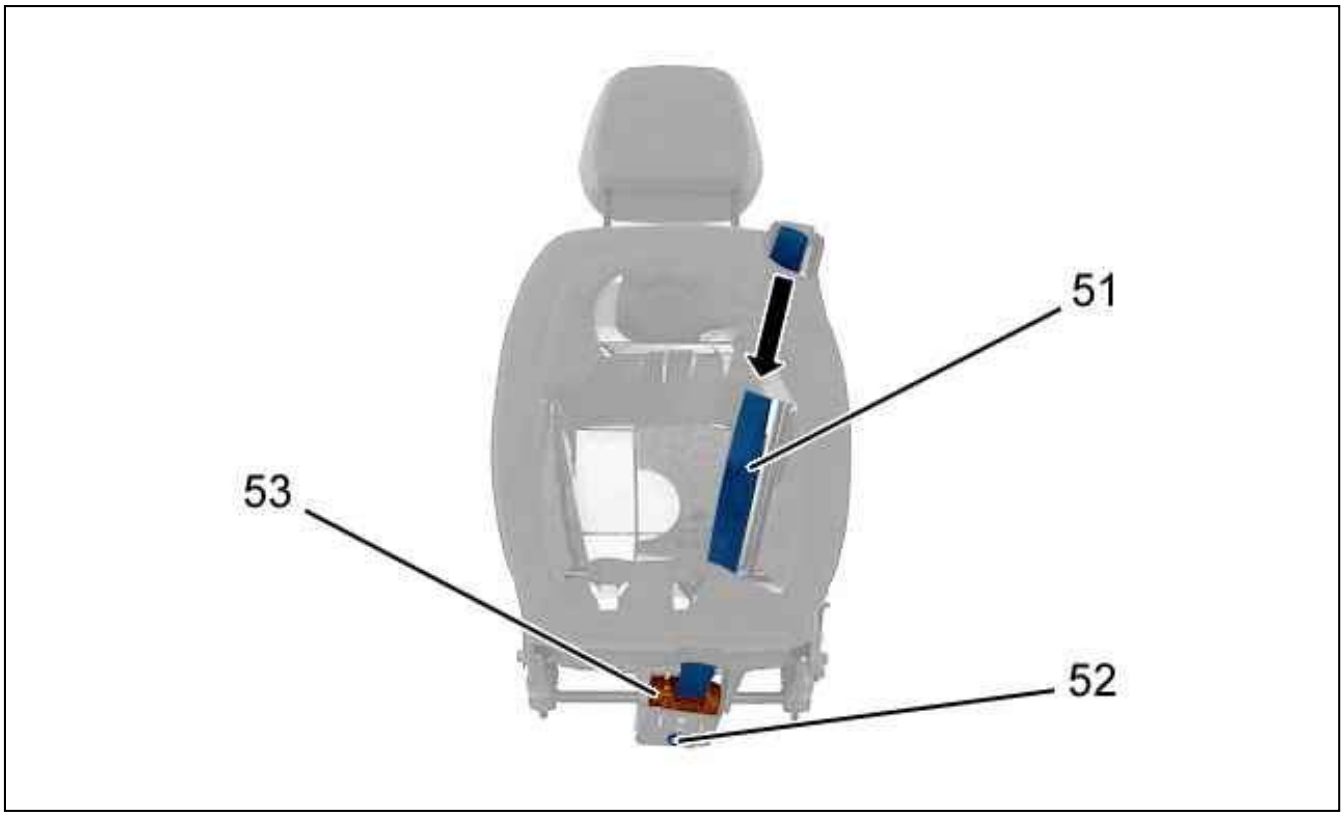

Figure : C5GM0EFD

Remove bolts (52).
Detach :

- The seat belt (51) (following the arrow)
- The inertia reel (53)

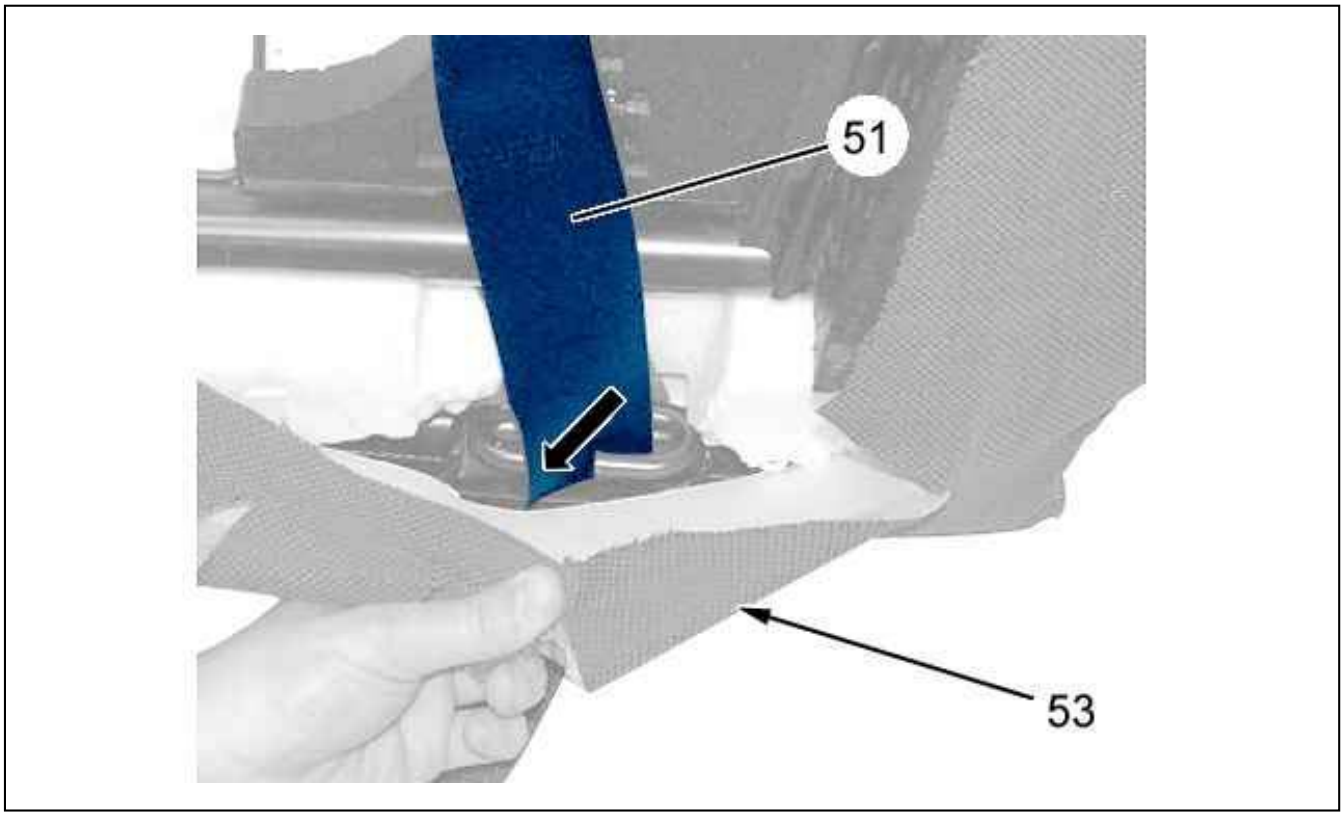

Figure : C5GM0EGD

Detach : The seat belt (51) (following the arrow).
Remove the seat belt reel (53).

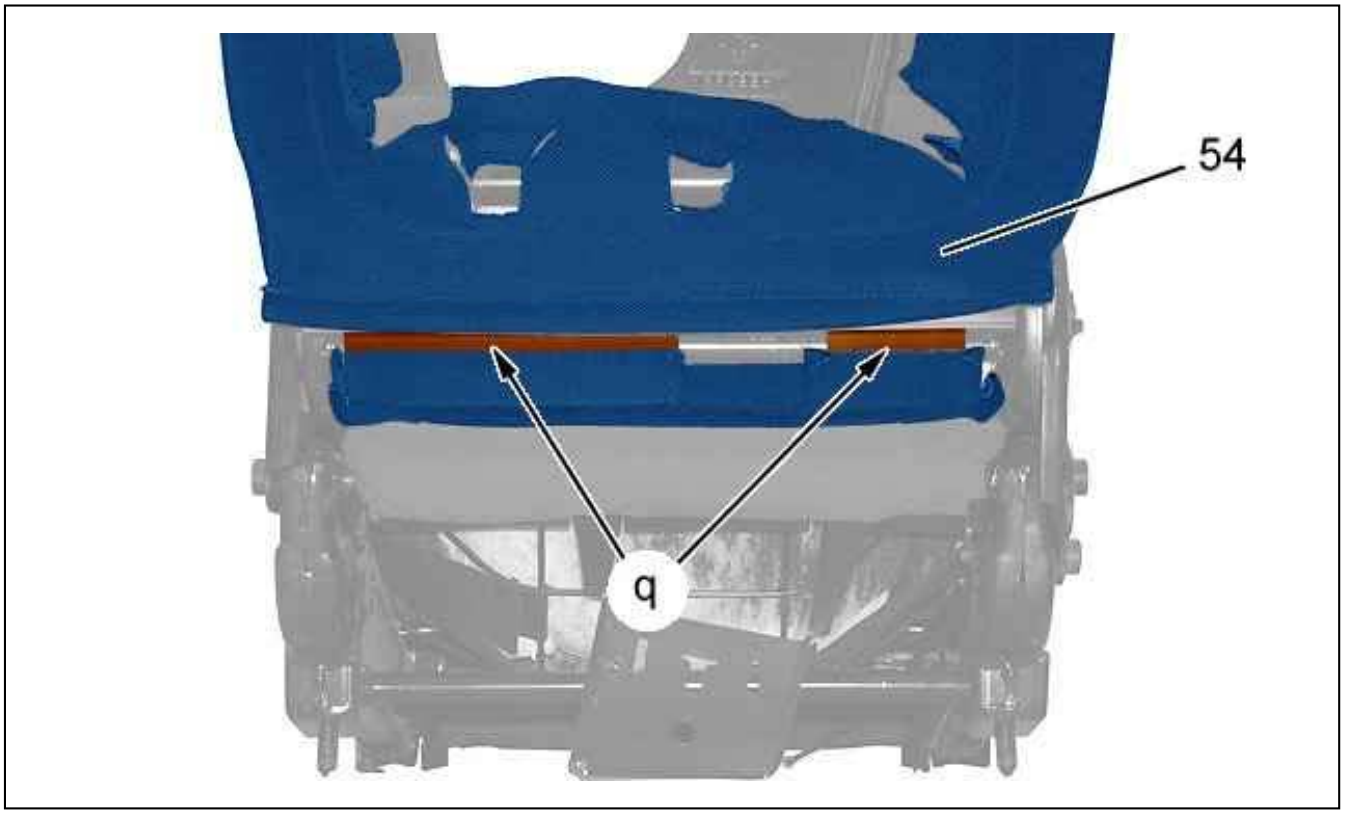

Figure : C5GM0EHD

Unclip : The backrest cover (54) (at "q") ; Using tool [1].

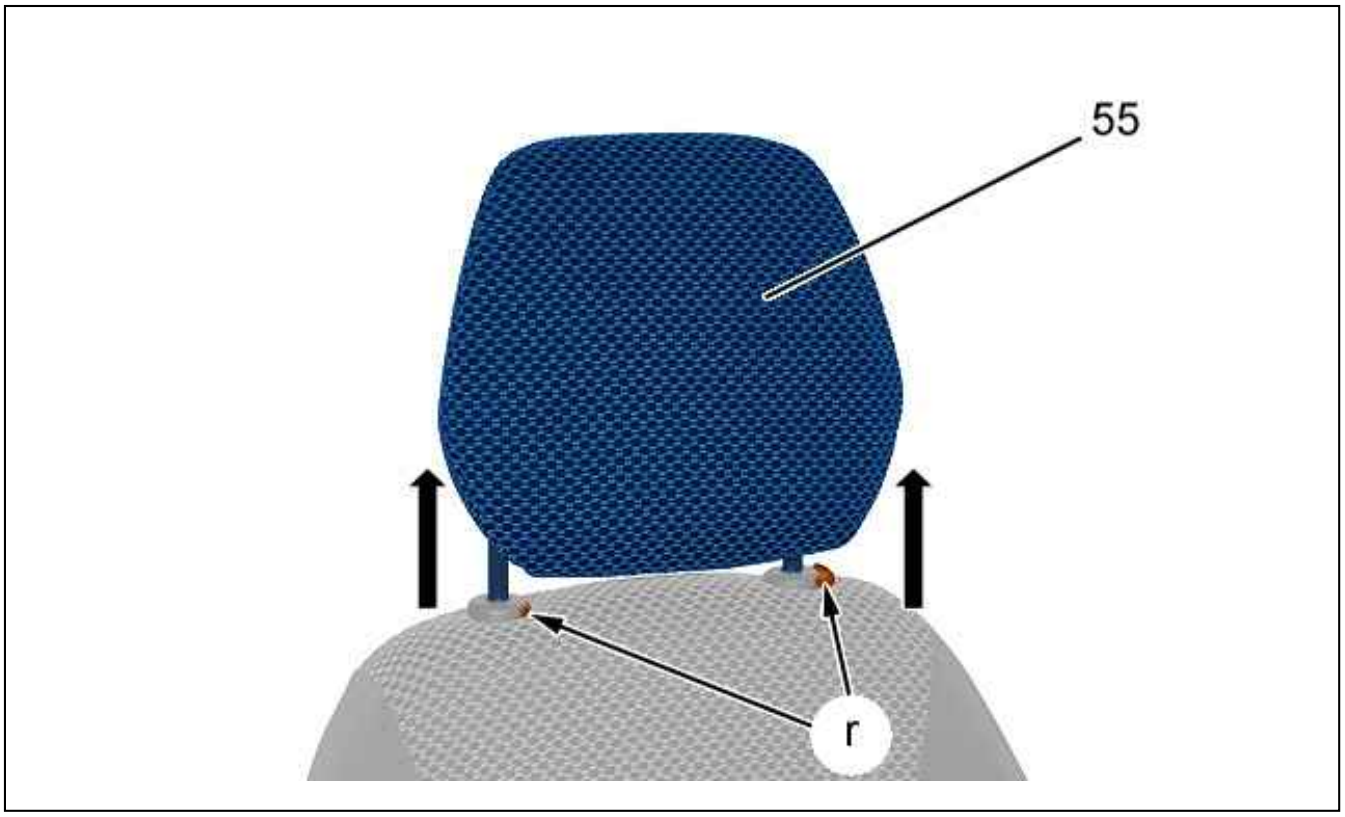

Figure : C5GM0EJD

Unclip : The head restraint (55) (at "r").
Remove : The head restraint (55) (as per arrows).

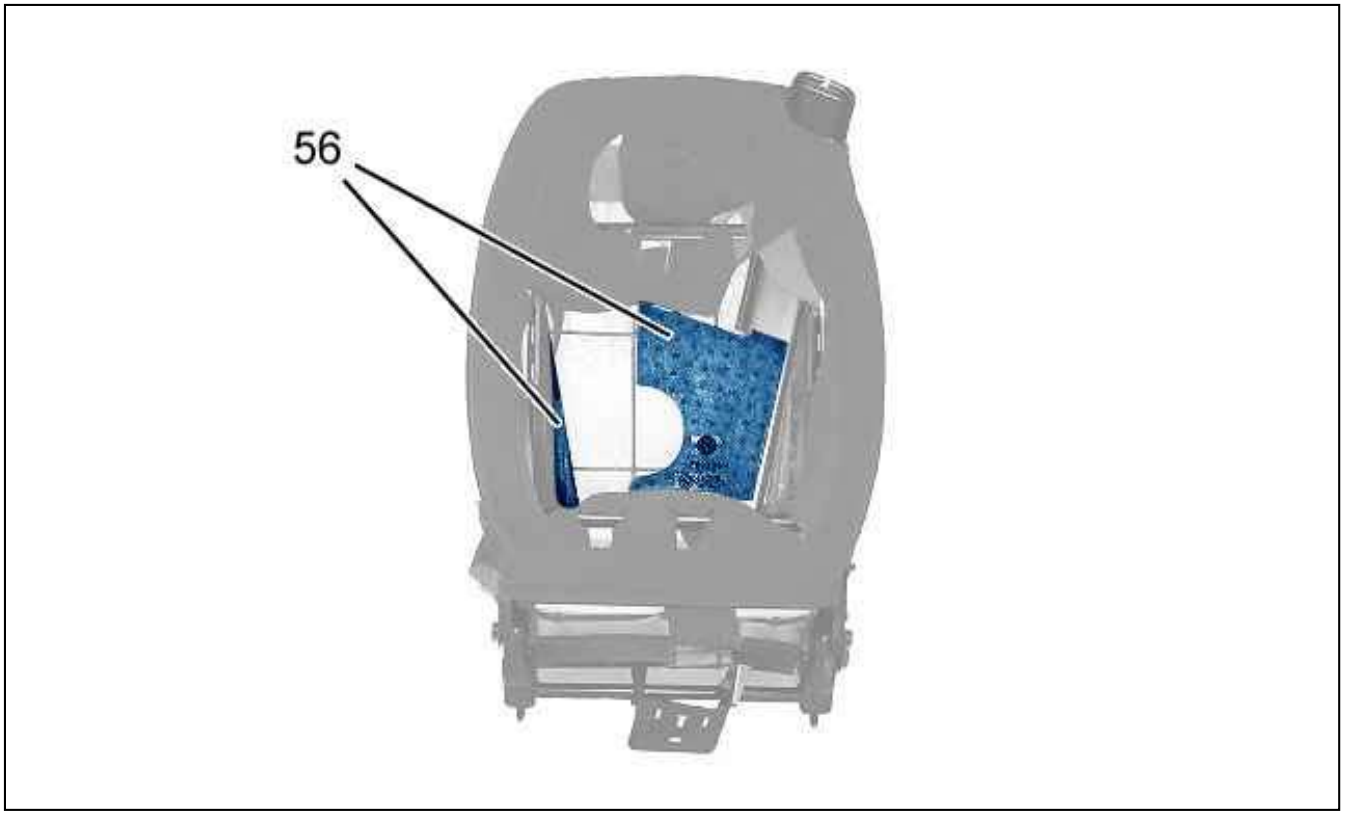

Figure : C5GM0EKD

Remove : Sound deadening material (56).

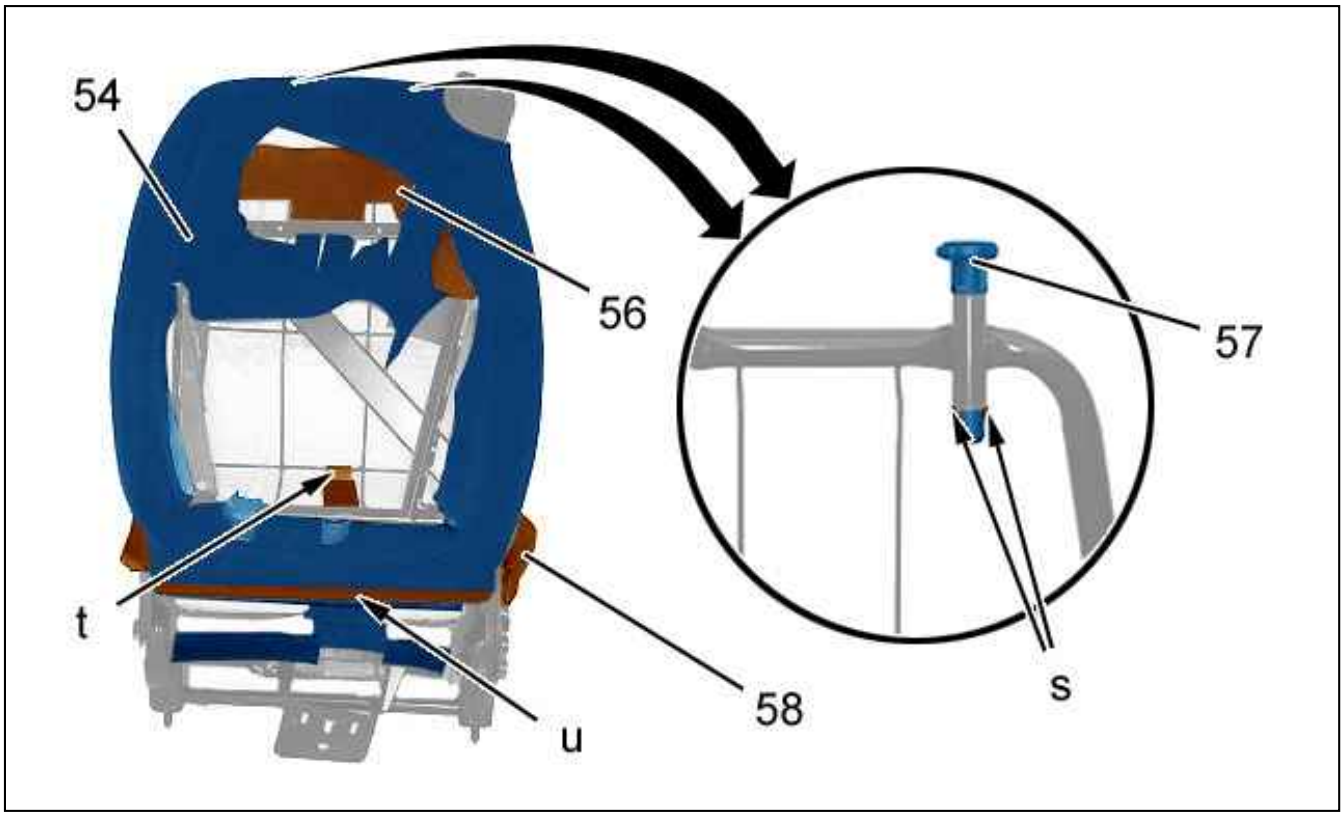

Figure : C5GM0ELD

Remove the sound-deadening (56).

Unclip :

- The head restraint guide (57) (at "s") (Symmetrical operation)
- The rear bench covered seat cushion (58) (at "t") ; Using tool [1]
- The trimmed seatback cushion (54)(at "u") ; Using tool [1]



Figure : C5GM0EMD

Remove the covered backrest cushion (54) (following the arrow).

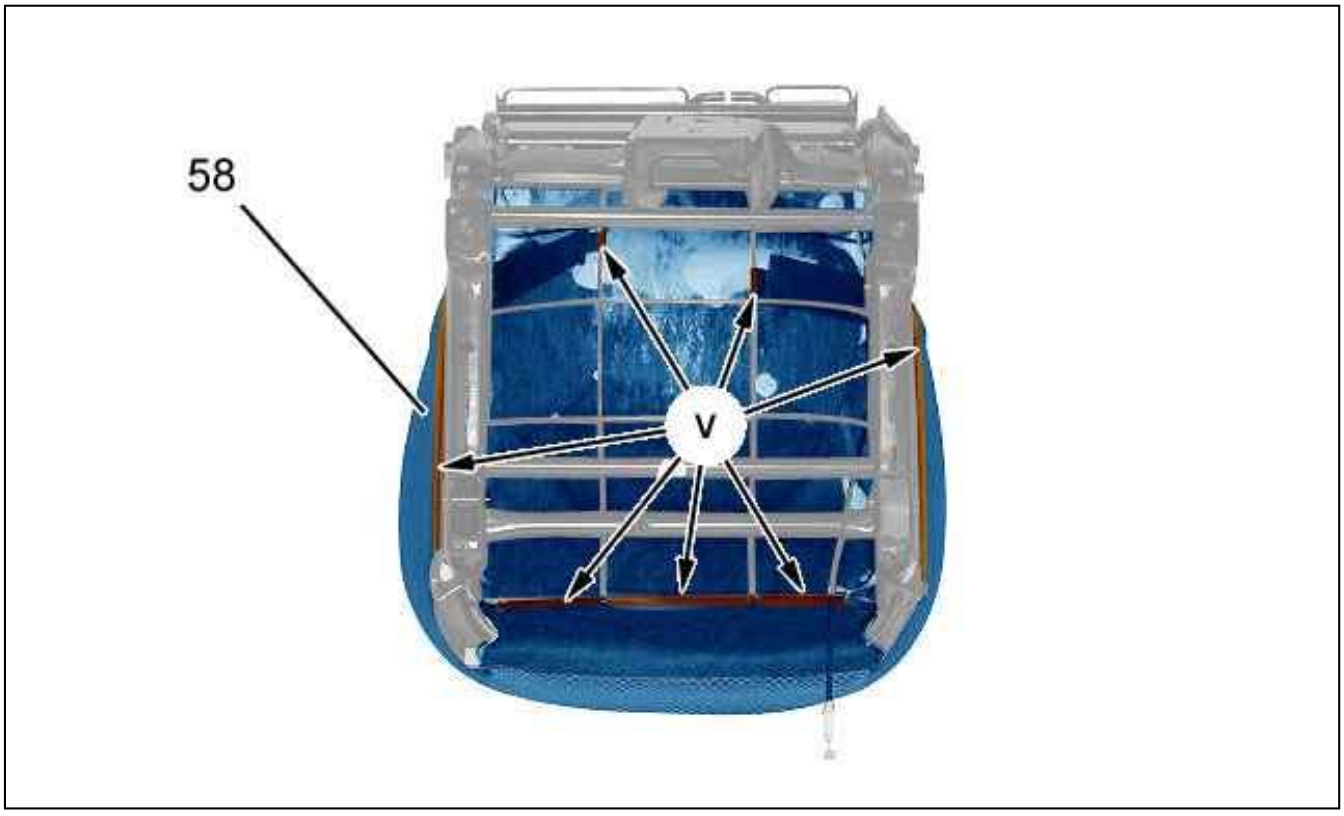

Figure : C5GM0END

Unclip : Covered seat cushion (58) (at "v") ; Using tool [1].

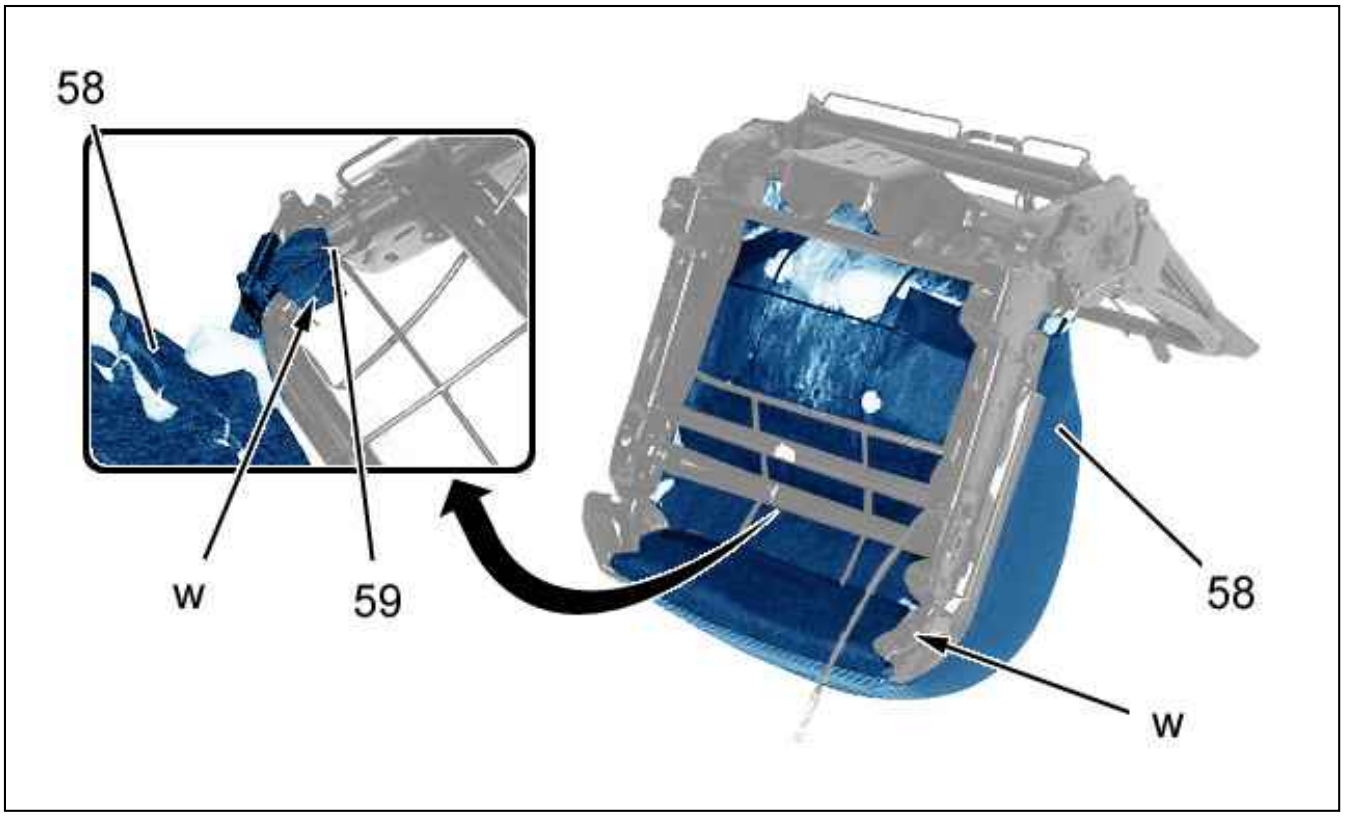

Figure : C5GM0EPD

Remove : The clamping ring (59).
Detach : Covered seat cushion (58) (at "w").

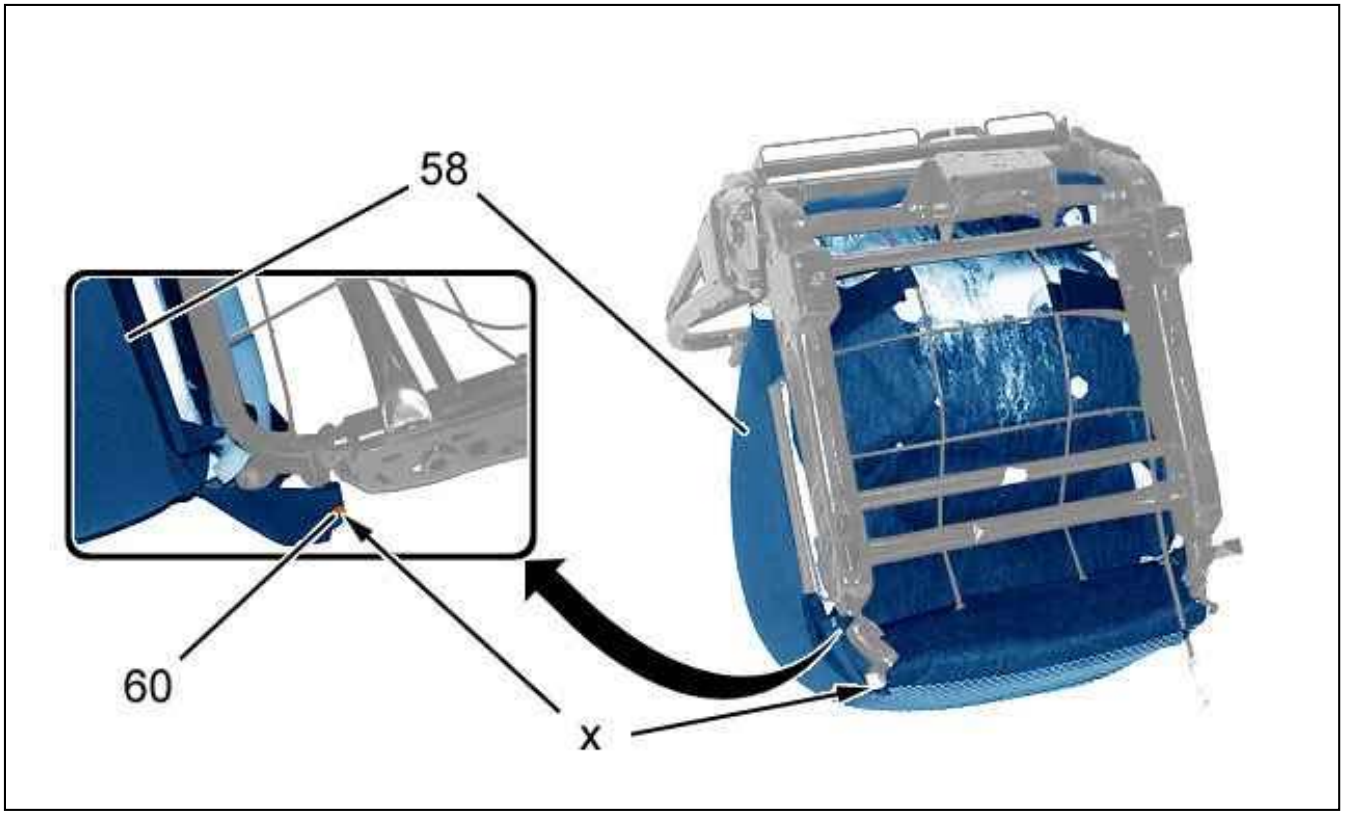

Figure : C5GM0EQD

Unclip the clips (60) (at "x") ; Using tool [1].

Remove the covered seat cushion (57).

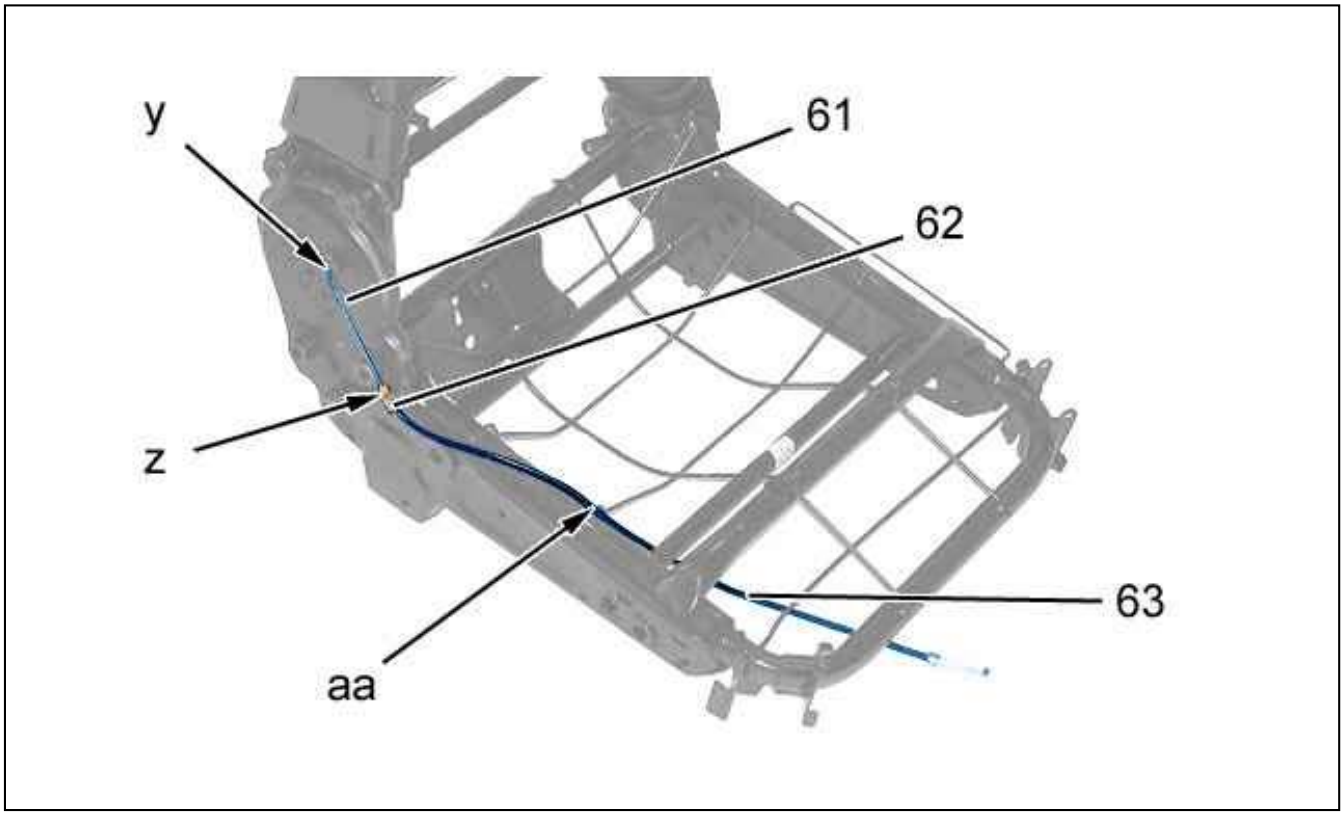

Figure : C5GM0ERD

Detach :

- The outer cable stop (62) (at "z")
- The cable (61) (at "y")
- The sleeve (63) (at "aa")

Remove : The cable inner (61) and outer (63) assembly.

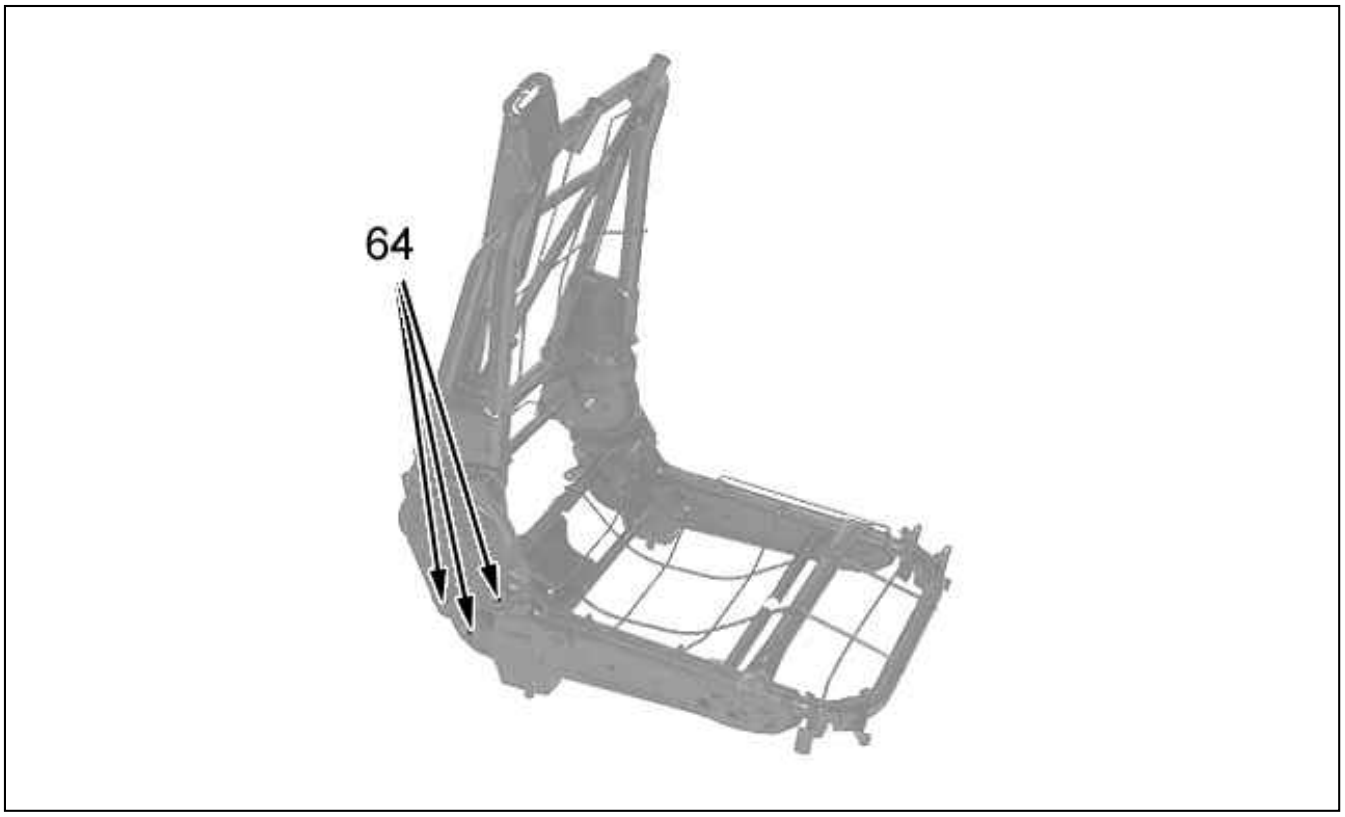

Figure : C5GM0ESD

Remove the bolts (64).

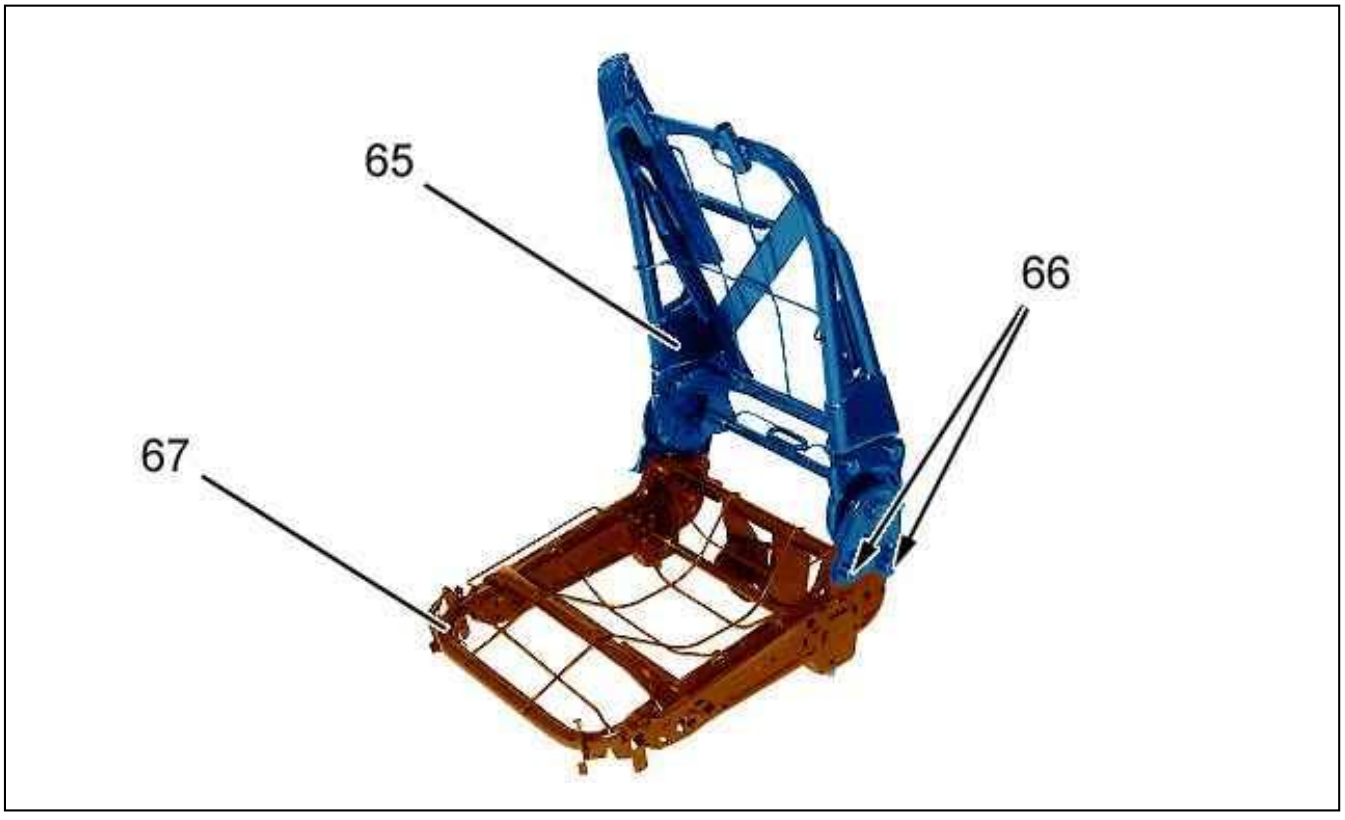

Figure : C5GM0ETD

Remove :

- The bolts (66)

- The upper frame (65)
- The lower frame (67)

4. Re-assembling

ESSENTIAL : Always replace the damaged fixings.

Carry out the re-trim operations in the reverse order to the stripping operations.
Tighten :

- The nuts (5) to 2 ± 0,4 daN.m
- The bolts (17) to 2 ± 0,4 daN.m
- The bolts (4), (8), (10), (13), (16), (25), (37), (52) to 4,2 ± 0,8 daN.m
- The bolts (64), (66) to 5,3 ± 0,7 daN.m
- The nuts (14) to 4,3 ± 0,8 daN.m

Check all the equipment works.

STRIPPING-ASSEMBLING : REAR BENCH SEAT (ROW 3)

ESSENTIAL : Observe the safety and cleanliness recommendations.

1. Recommended tools

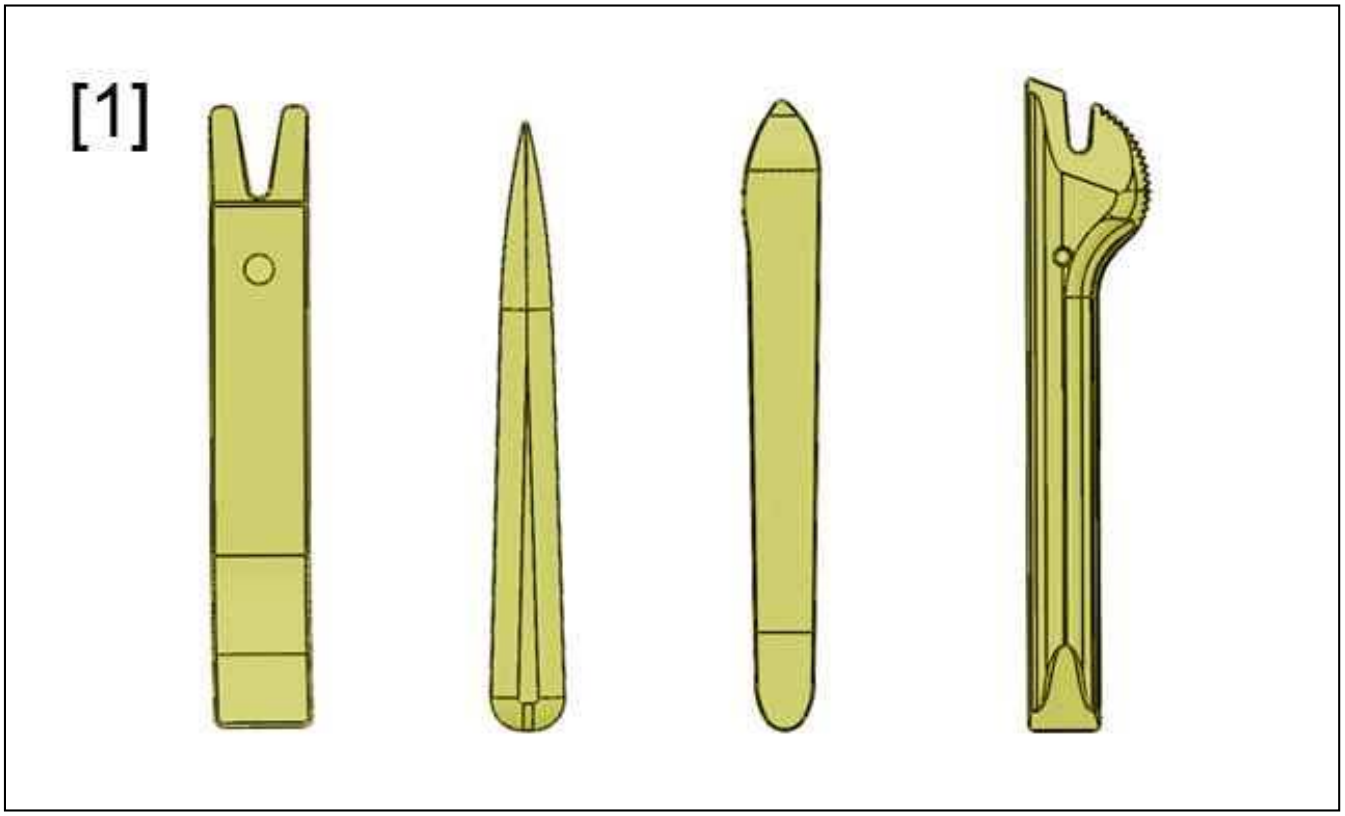

Figure : E5AP30WD

[1]Stripping tools (-).1350-ZZ.

2. Presentation



Figure : C5GM0EUD

(1)Seat (right).
(2)Central seat.
(3)Seat (L.H. side).

3. Stripping

Remove the rear seats (Row 3).

3.1. Seat mounting

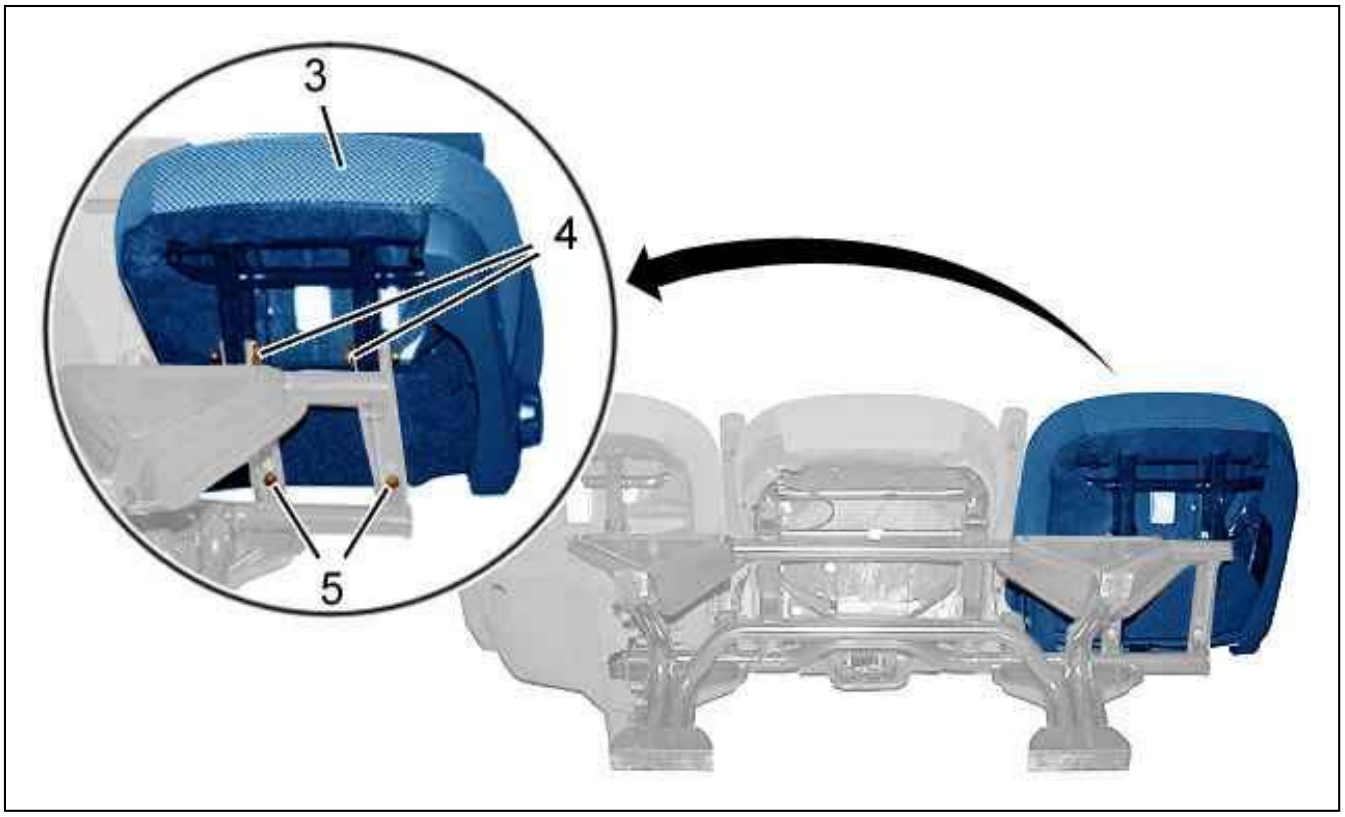

Figure : C5GM0EVD

Remove :

- The bolts (4)
- The nuts (5)
- The seat (Left hand) (3)

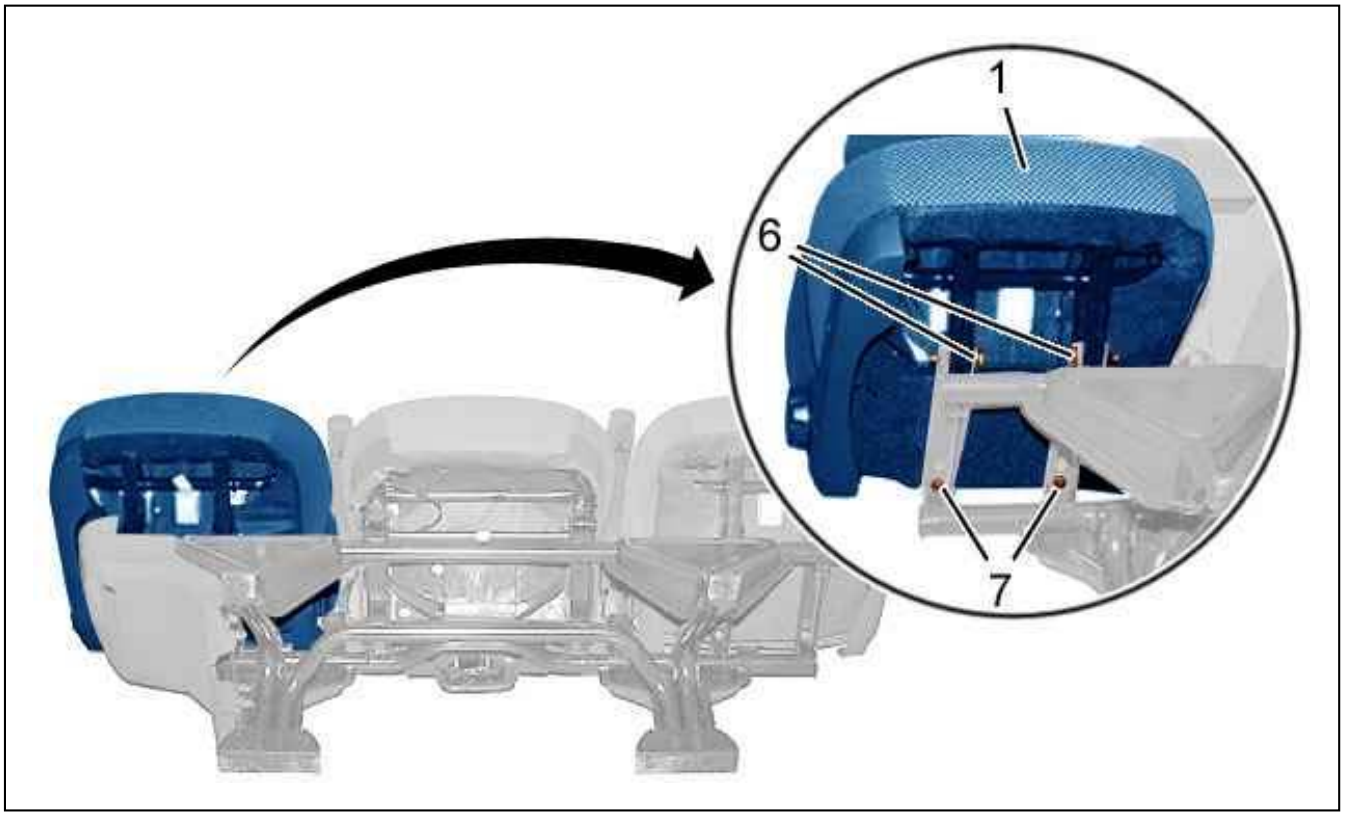

Figure : C5GM0EWD

Remove :

- The bolts (6)
- The nuts (7)
- The seat (Right hand) (1)

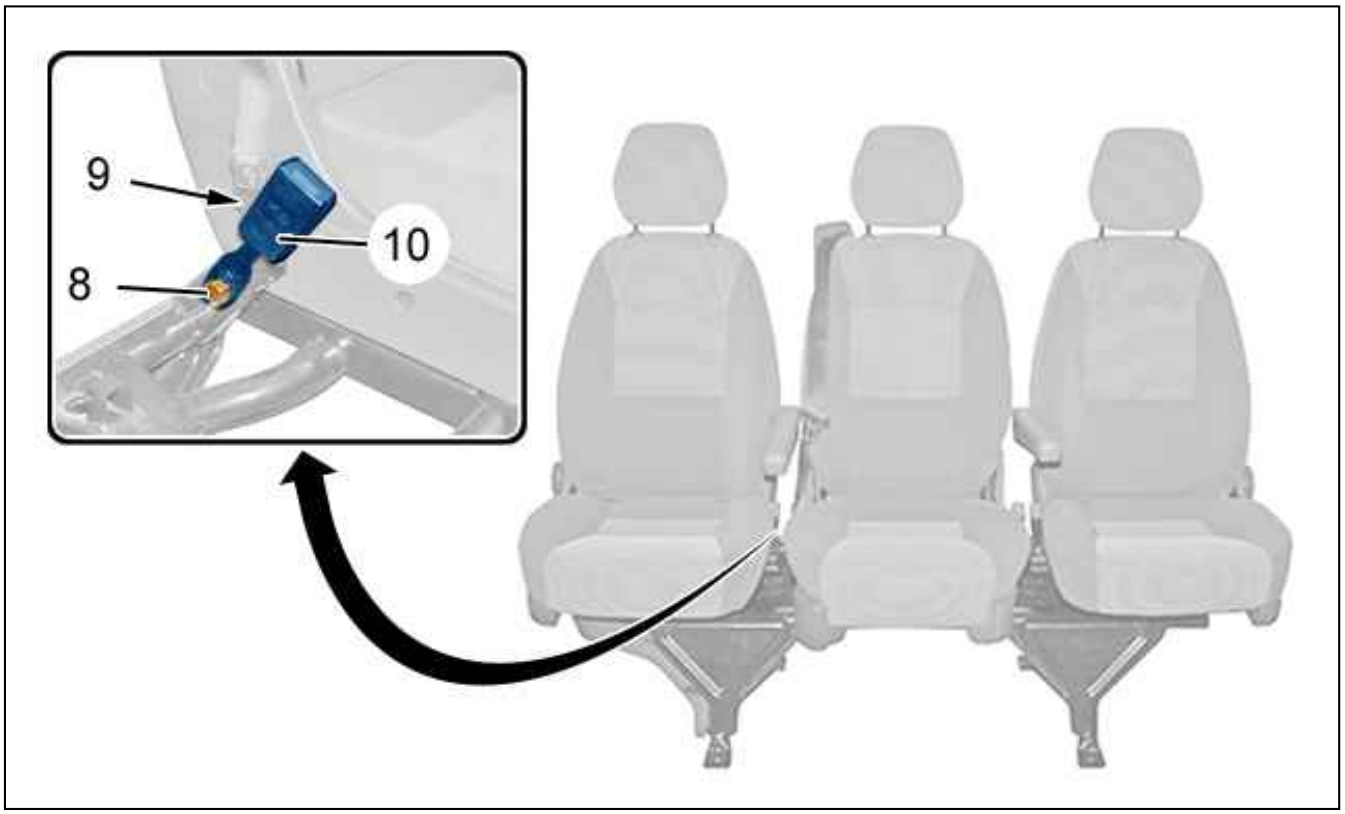

Figure : C5GM0EXD

Remove :

- The (8) bolt
- The seat belt attachment (9)
- The seat belt stalk (10)

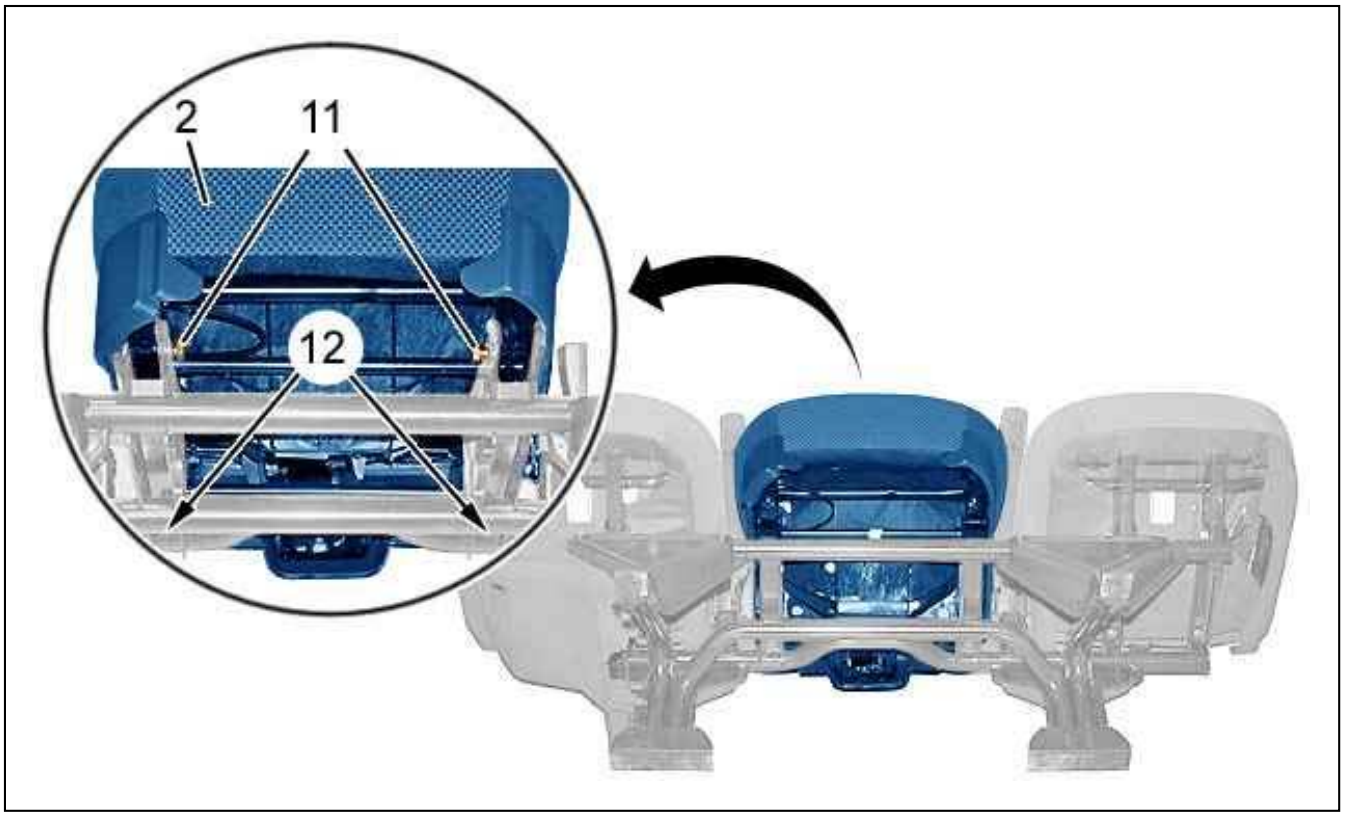

Figure : C5GM0EYD

Remove :

- The bolts (11)
- The nuts (12)
- Central seat(2)

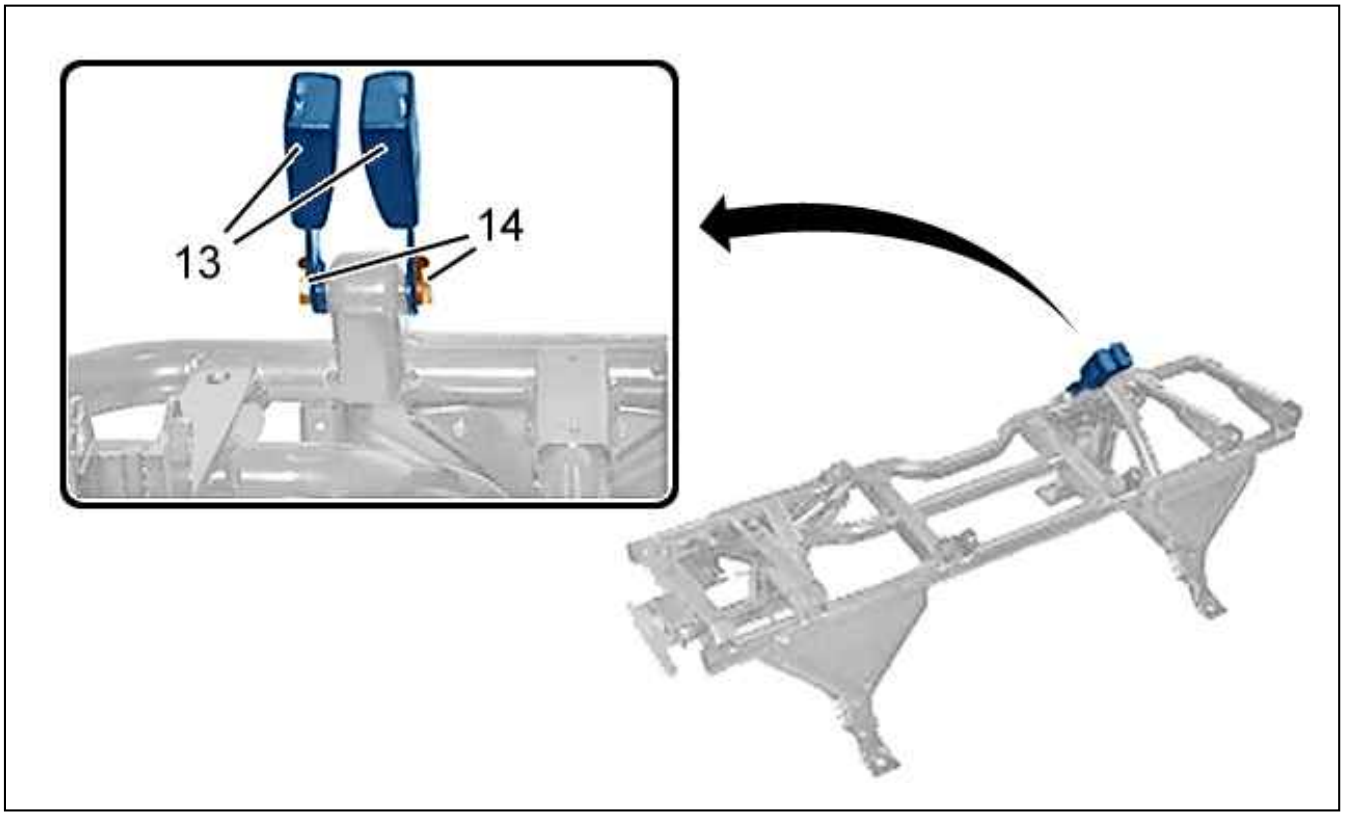

Figure : C5GM0EZD

Remove :

- The bolts (14)
- The seat belt stalks (13)

3.2. Seat : Left hand

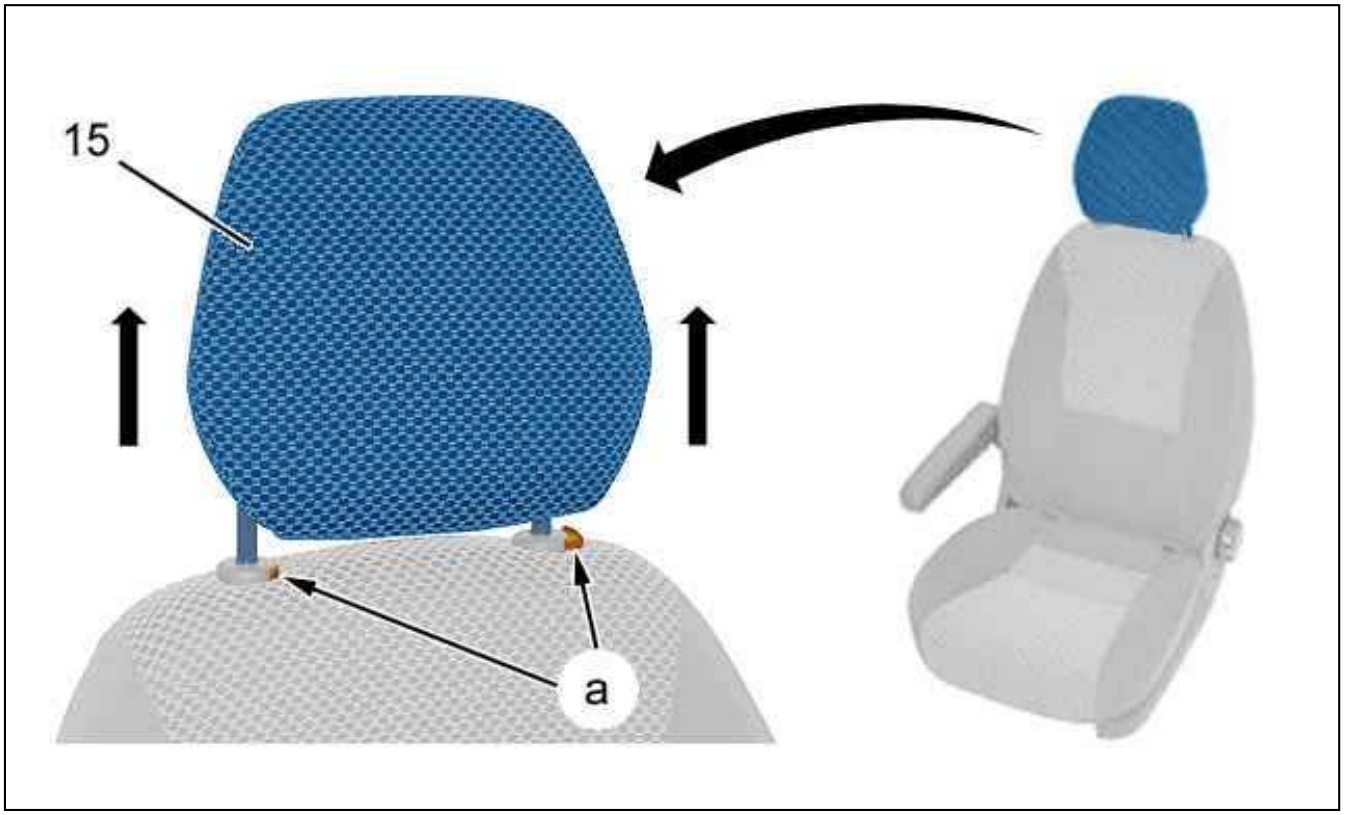

Figure : C5GM0F0D

Unclip : The head restraint (15) (at "d").
Remove the head restraint (15) (as per arrows).

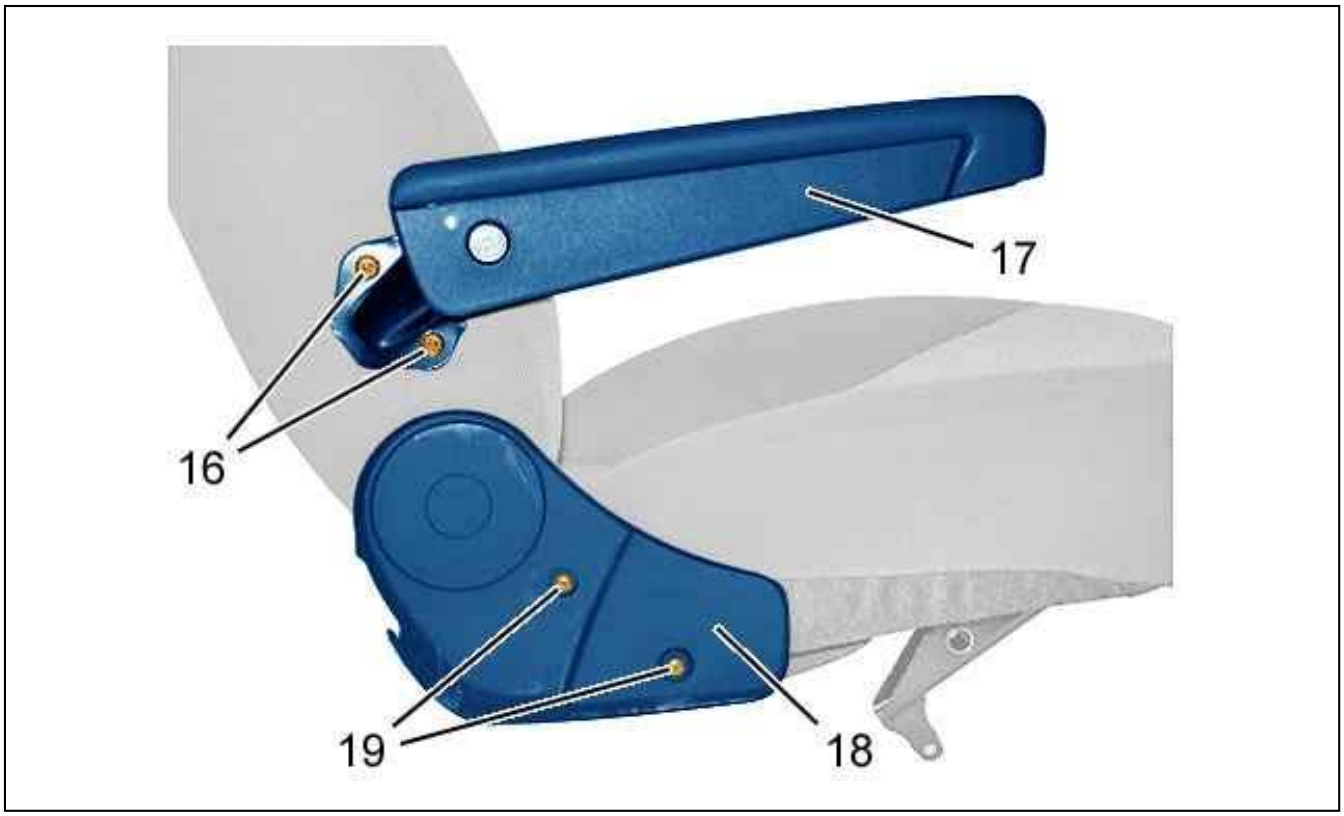

Figure : C5GM0F1D

Remove :

- The bolts (16)
- Armrest (17)
- The bolts (19)
- The left-hand lower trim (18)

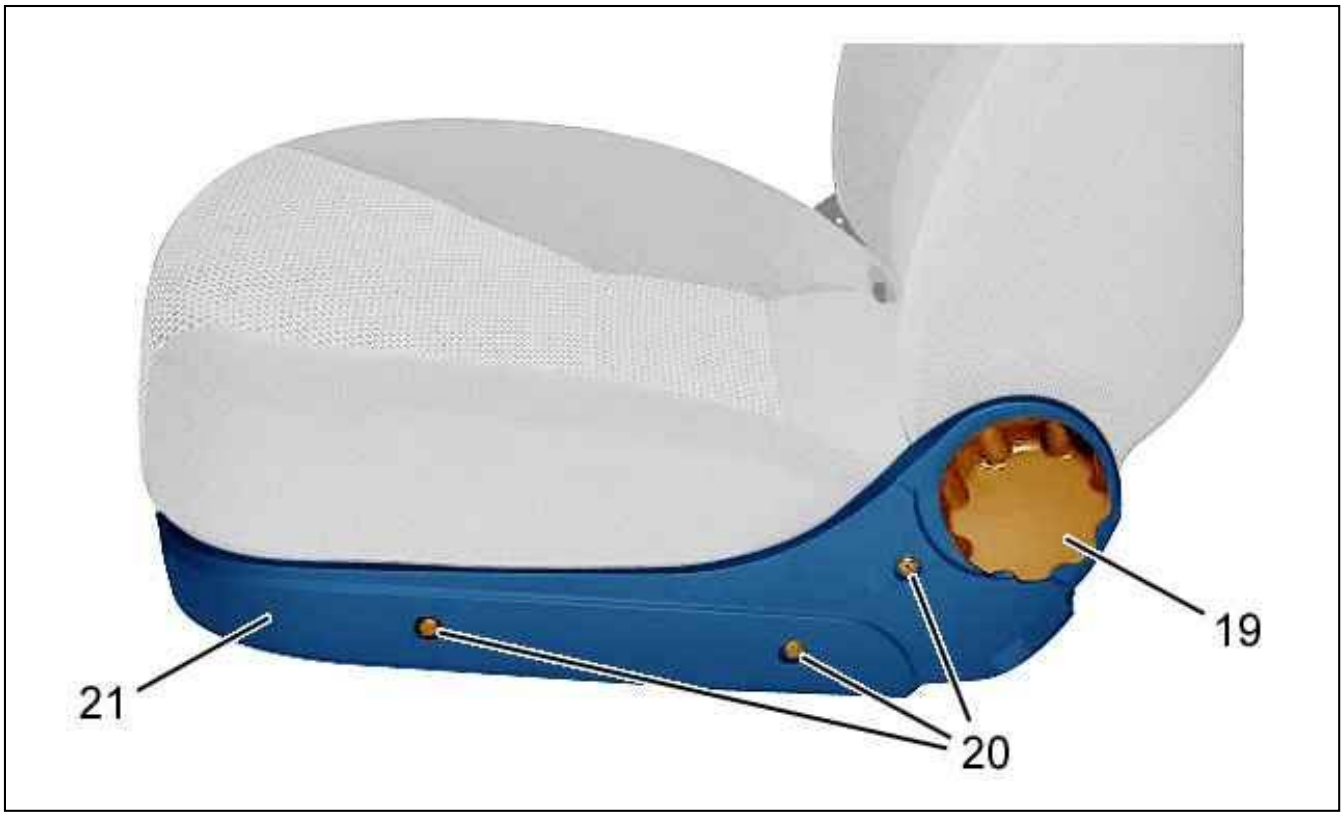

Figure : C5GM0F2D

Unclip : The knurled wheel (19) ; Using tool [1].

Remove :

- The knurled wheel (19)
- The bolts (20)
- The left-hand lower trim (21)



Figure : C5GM0F3D

Unclip : The backrest cover (22) (at "b") ; Using tool [1].

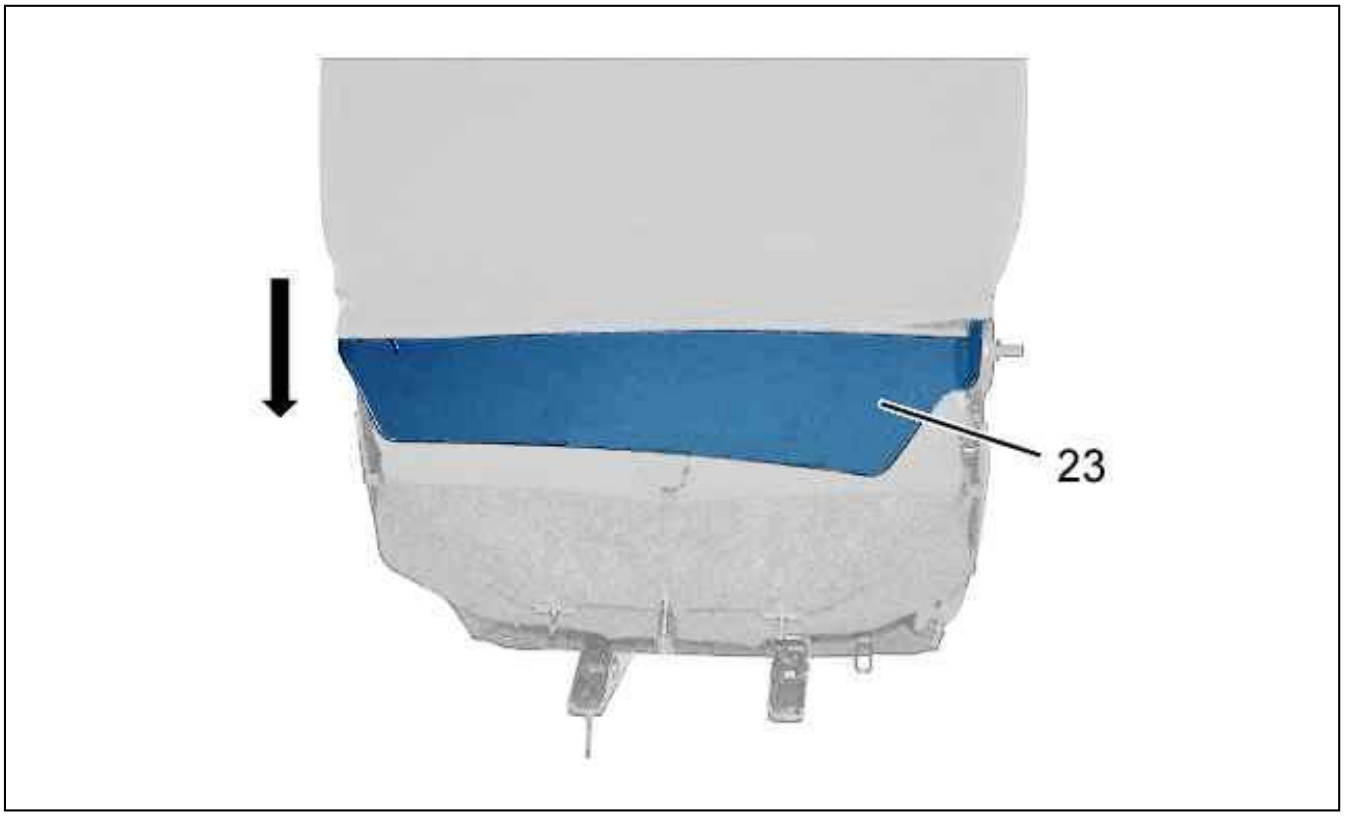

Figure : C5GM0F4D

Remove the cardboard strengthener (23) (following the arrow).

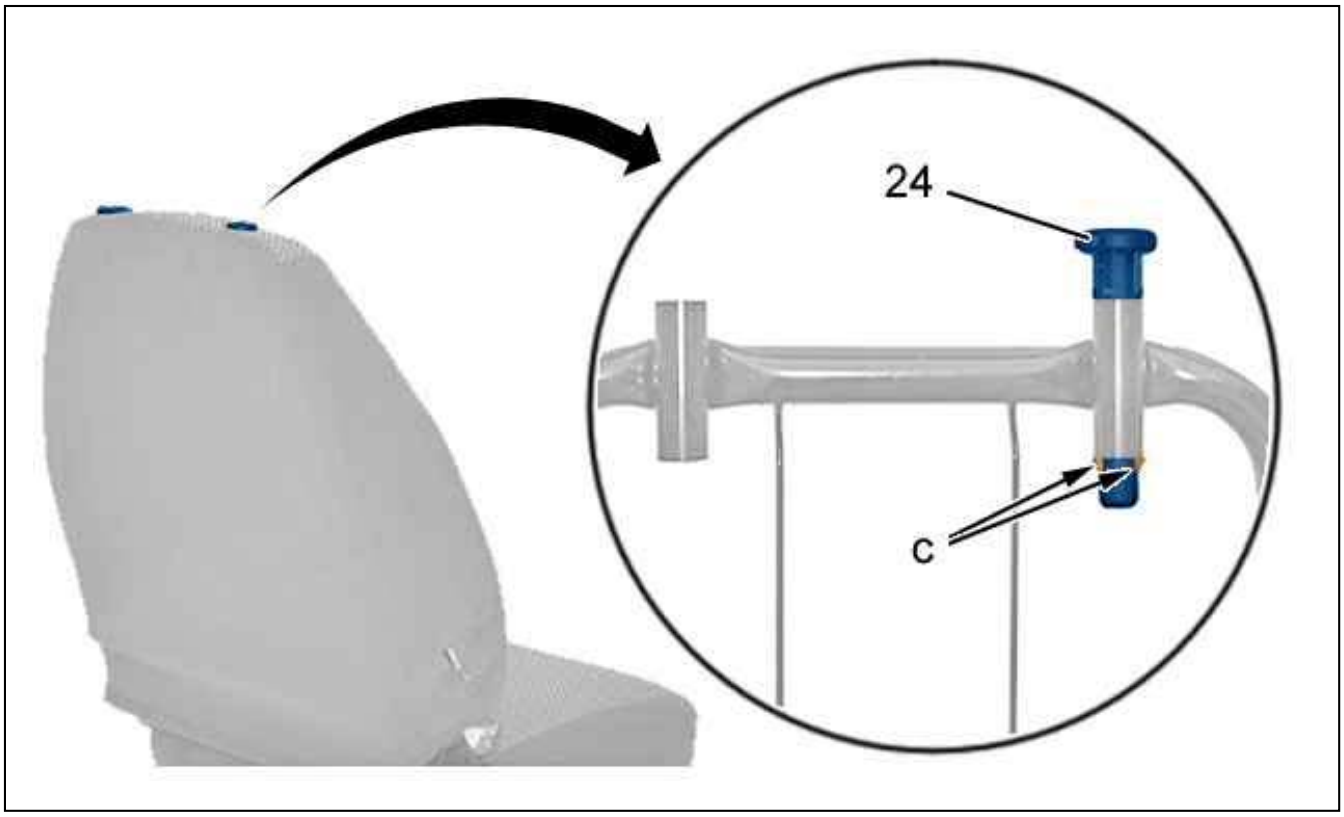

Figure : C5GM0F5D

Unclip the head restraint guide (24) (at "c") (Symmetrical operation).

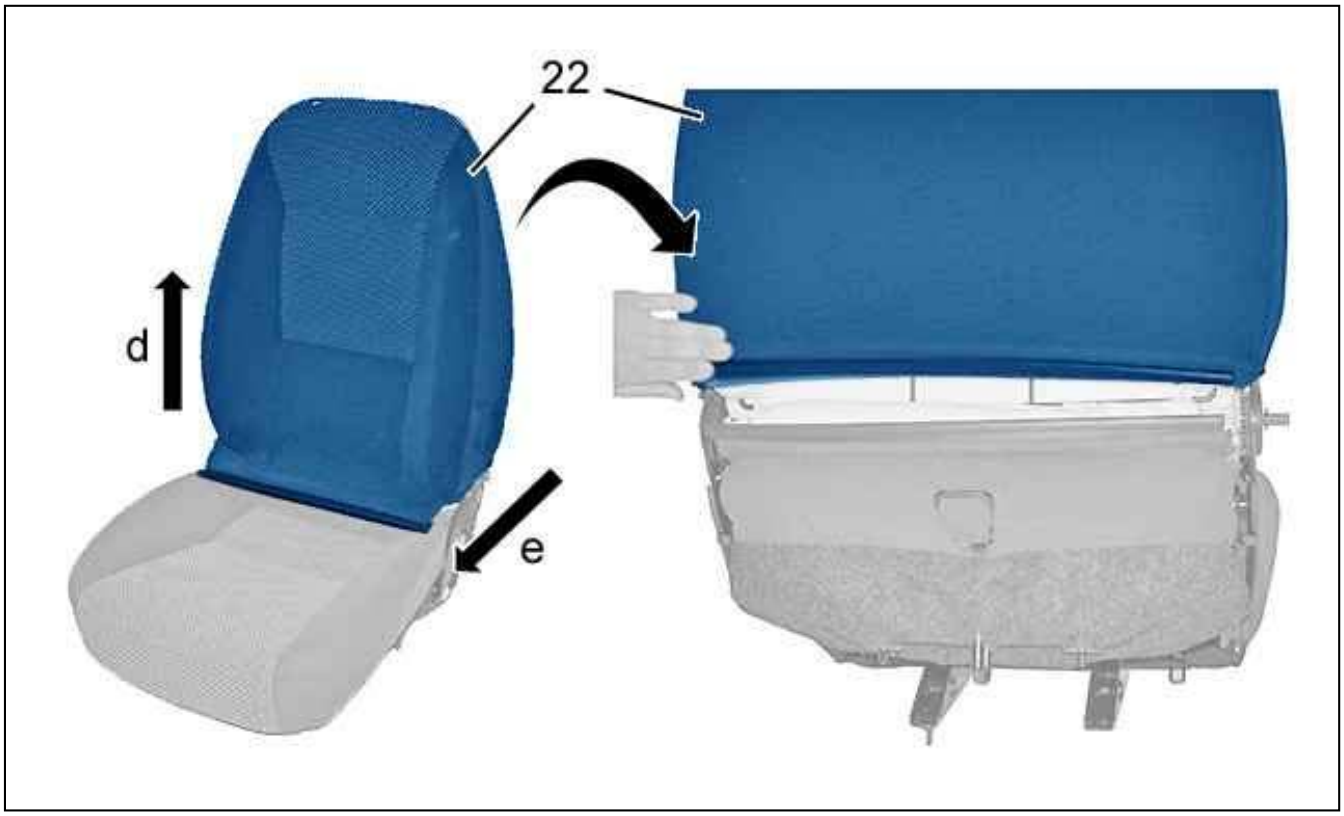

Figure : C5GM0F6D

Detach : The backrest cover (22) (following "e").
Remove the backrest cover (22) (following "d").



Figure : C5GM0F7D

Remove : The foam of the seat back (25) (as per arrows).

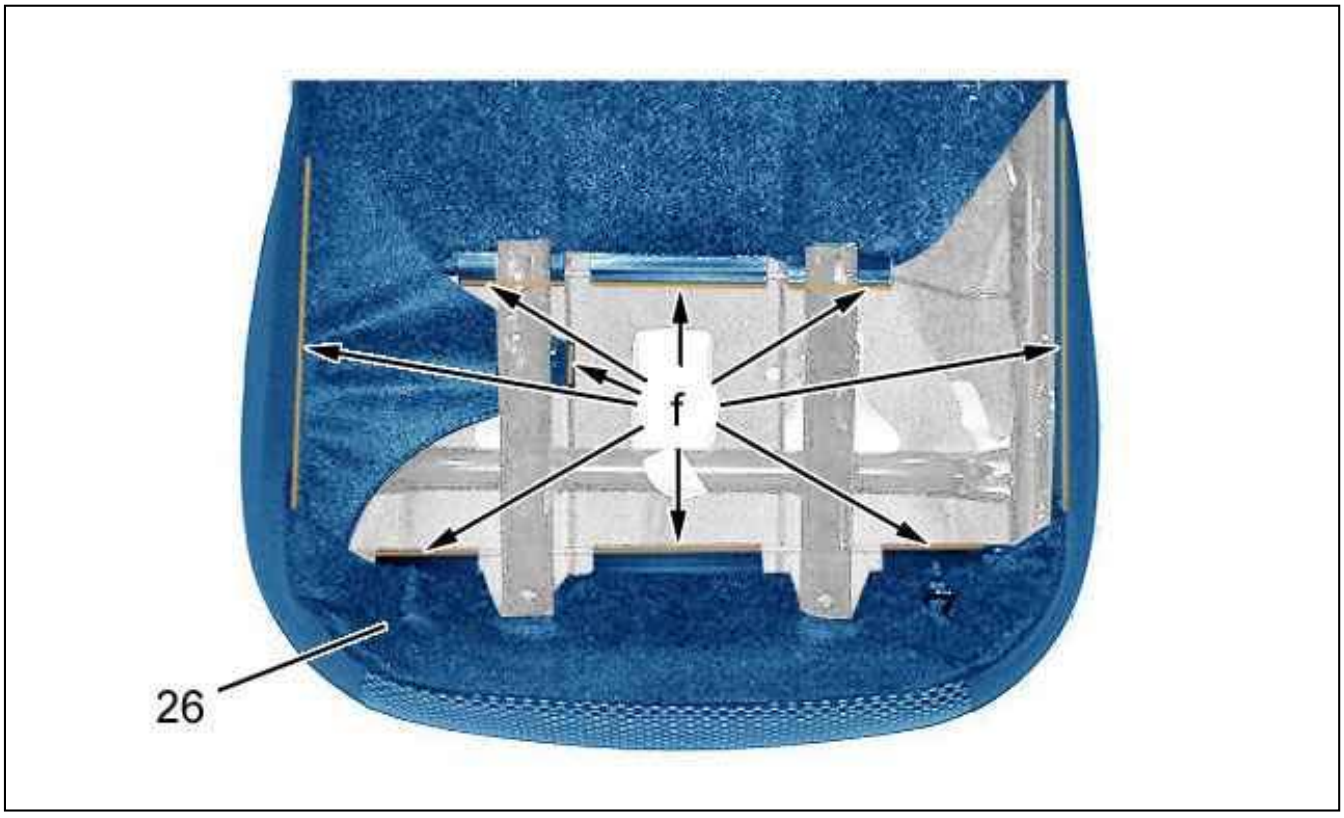

Figure : C5GM0F8D

Unclip : The trimmed seat squab cushion (26) (at "f") ; Using tool [1].

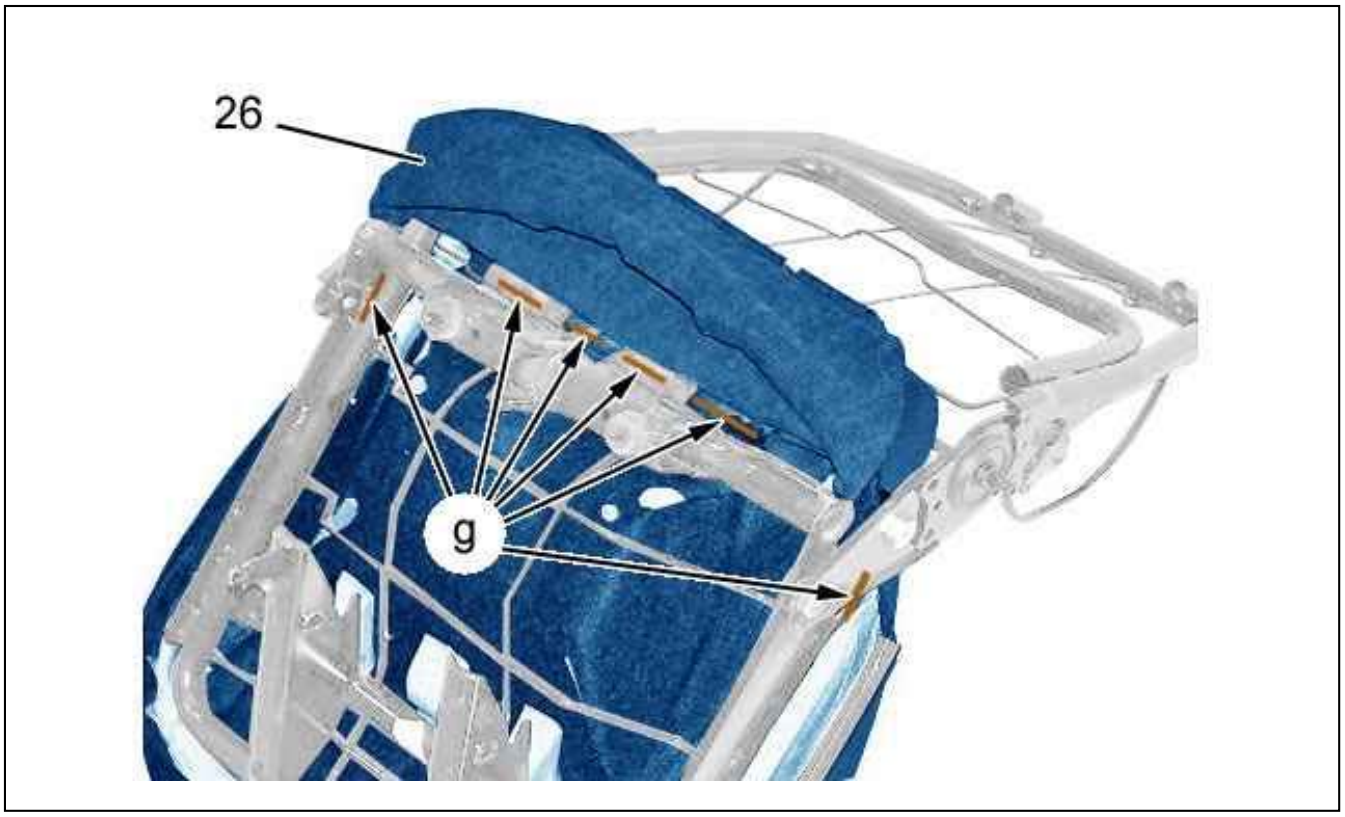

Figure : C5GM0F9D

Unclip : The trimmed seat squab cushion (26) (at "g") ; Using tool [1].

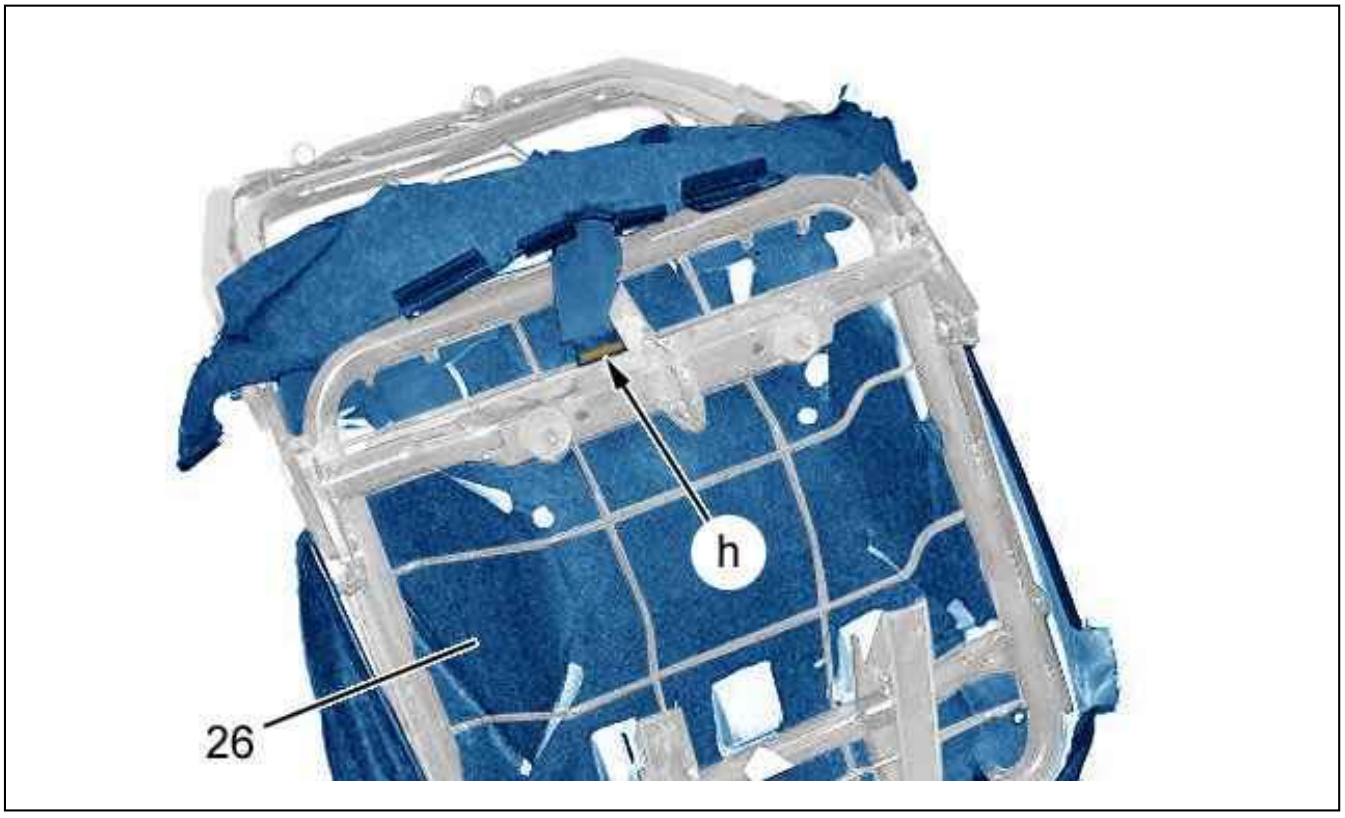

Figure : C5GM0FAD

Unclip : The trimmed seat squab cushion (26) (at "h") ; Using tool [1].



Figure : C5GM0FBD

Detach:The trimmed seat squab cushion (26) (as per arrows).
Remove the covered seat cushion (26).

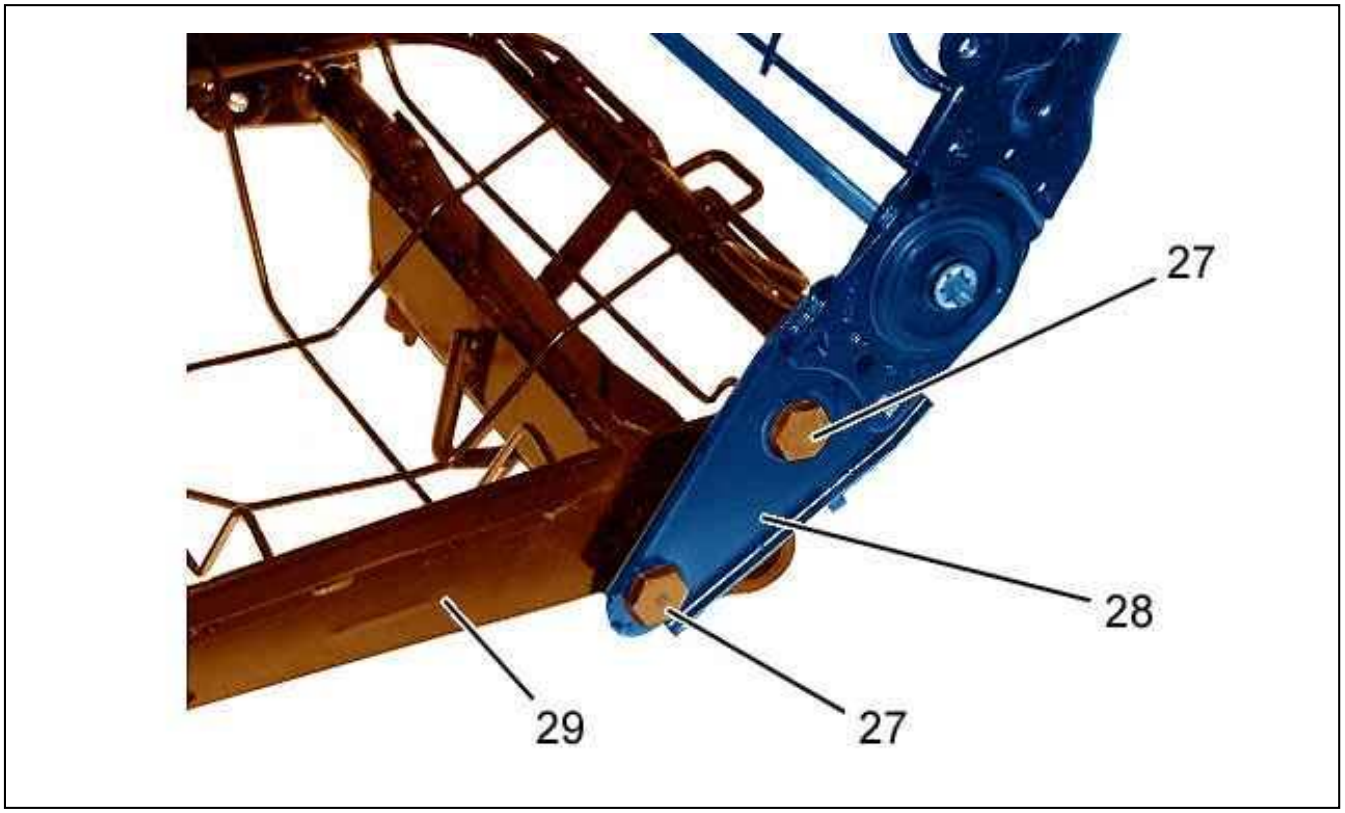

Figure : C5GM0FCD

Remove :

- The bolts (27) (Symmetrical operation)
- The upper frame (28)
- The lower frame (29)

3.3. Tipping right-hand seat

Proceed in the same way as for the left-hand seat.

3.4. Central seat

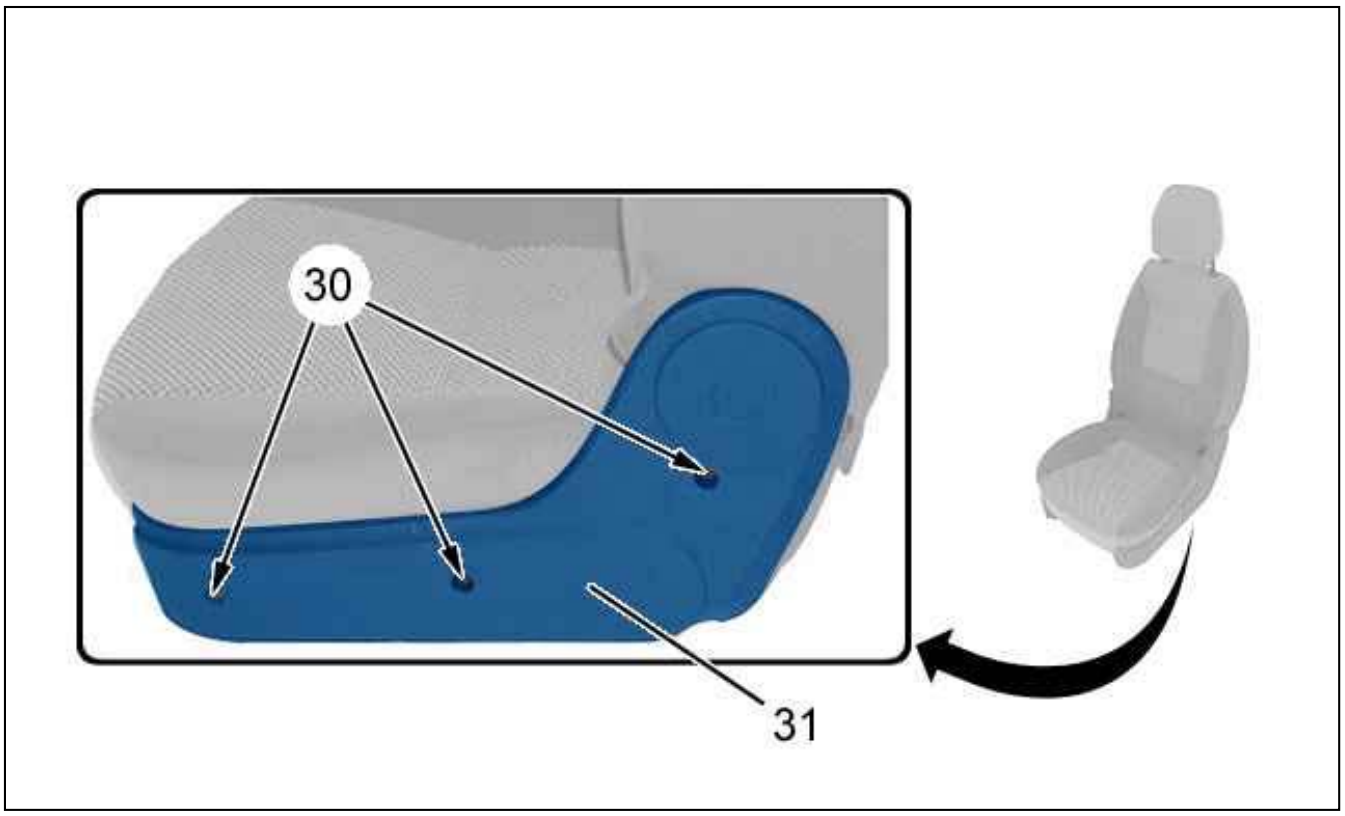

Figure : C5GM0FDD

Remove :

- The bolts (30)
- The left-hand lower trim (31)

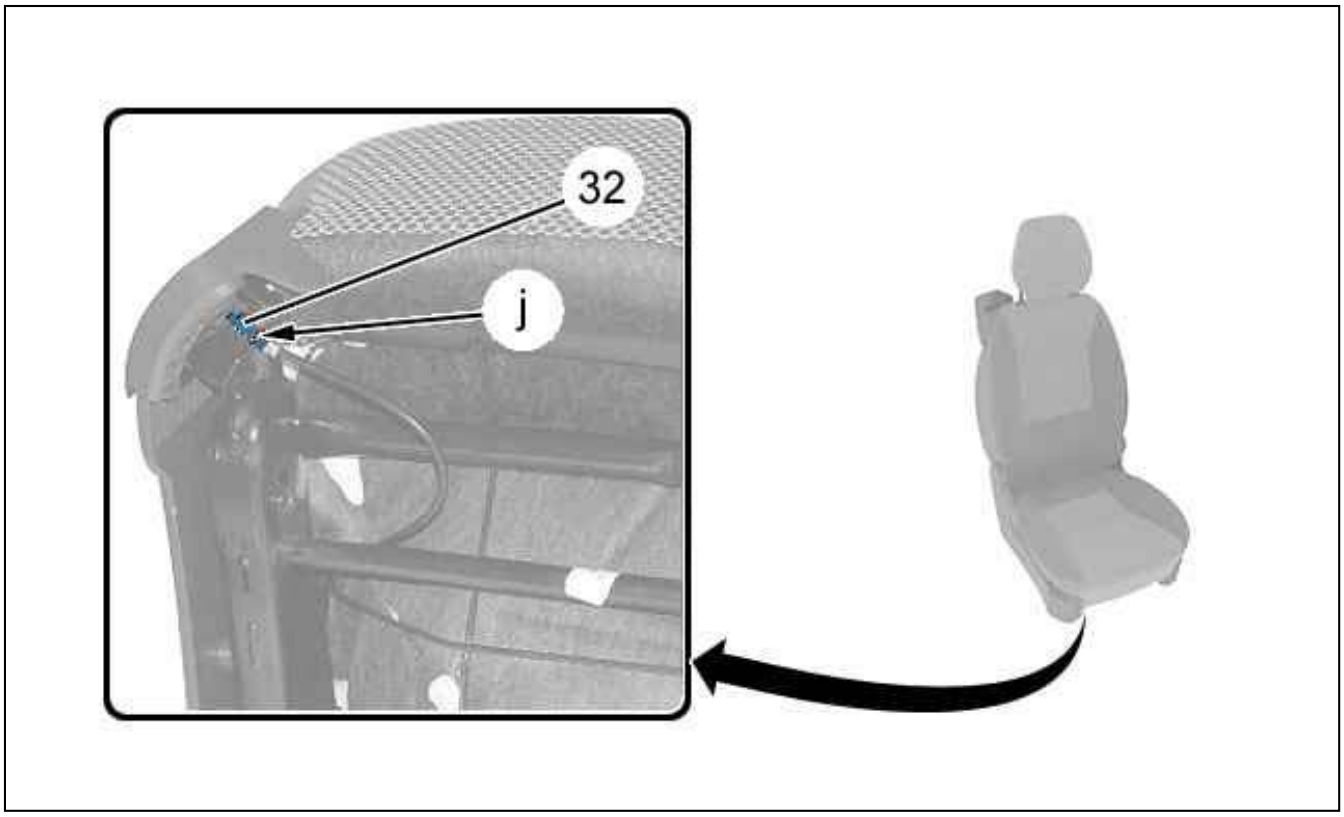

Figure : C5GM0FED

Detach the sheath stop (32) (at "j").

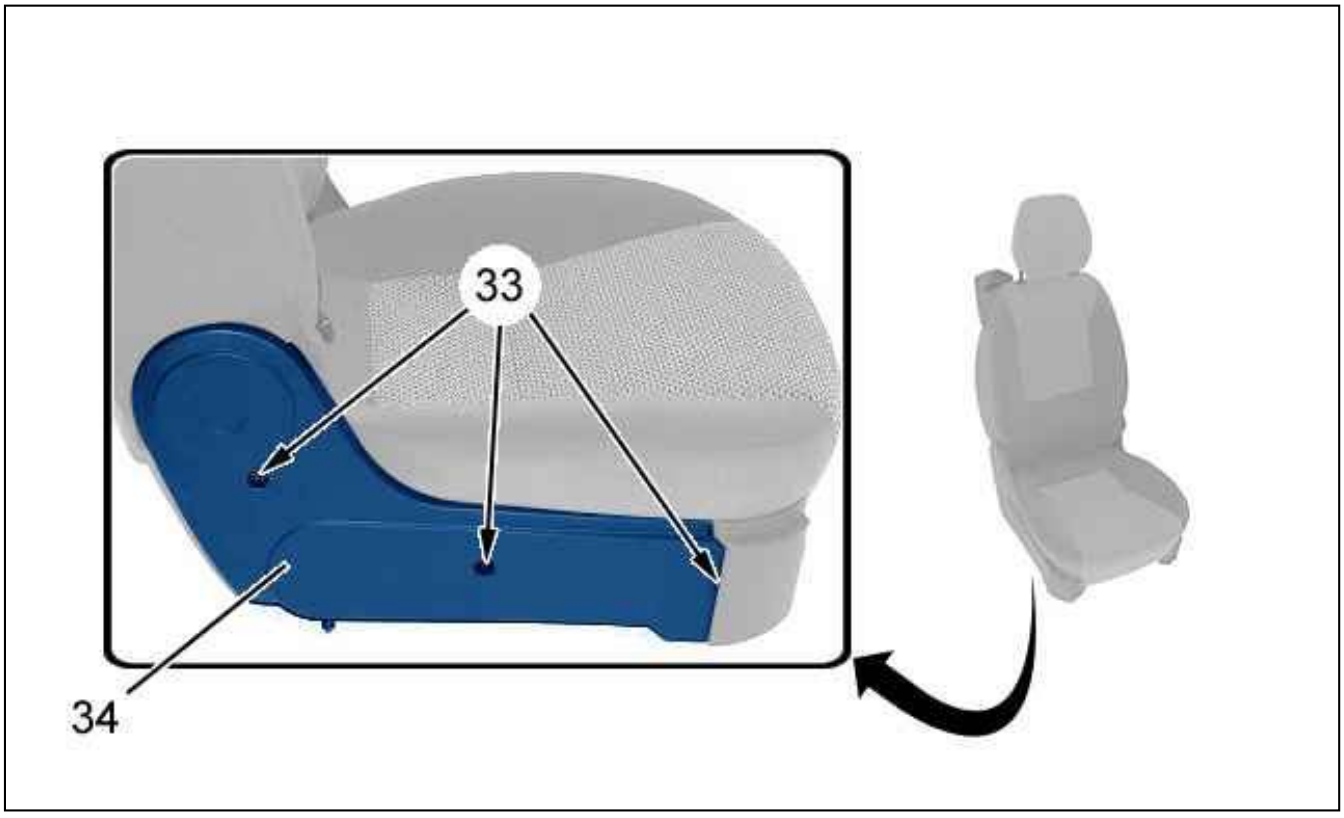

Figure : C5GM0FFD

Remove : The bolts (33).
Remove the RH lower lining (34).

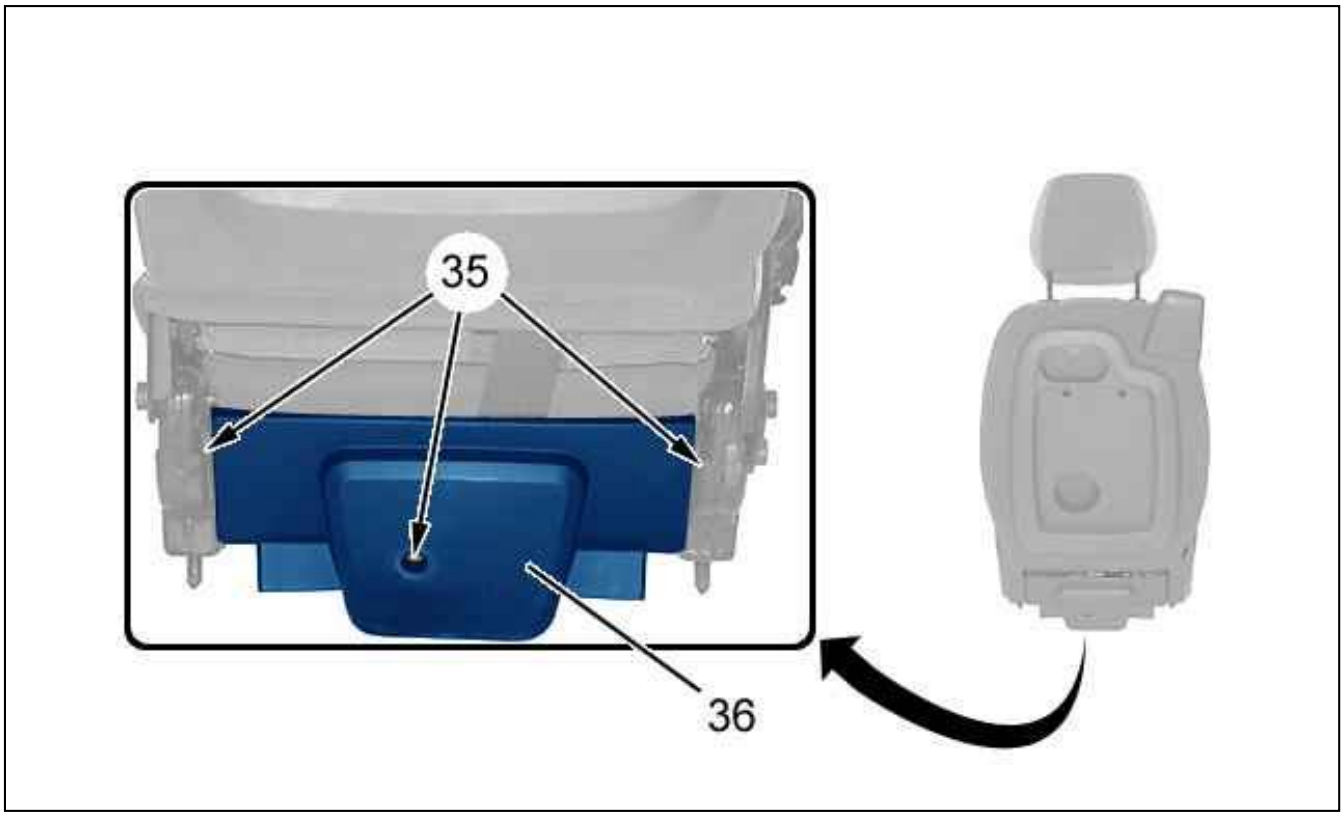

Figure : C5GM0FGD

Remove :

- The bolts (35)
- The bottom trim (36) (Rear)

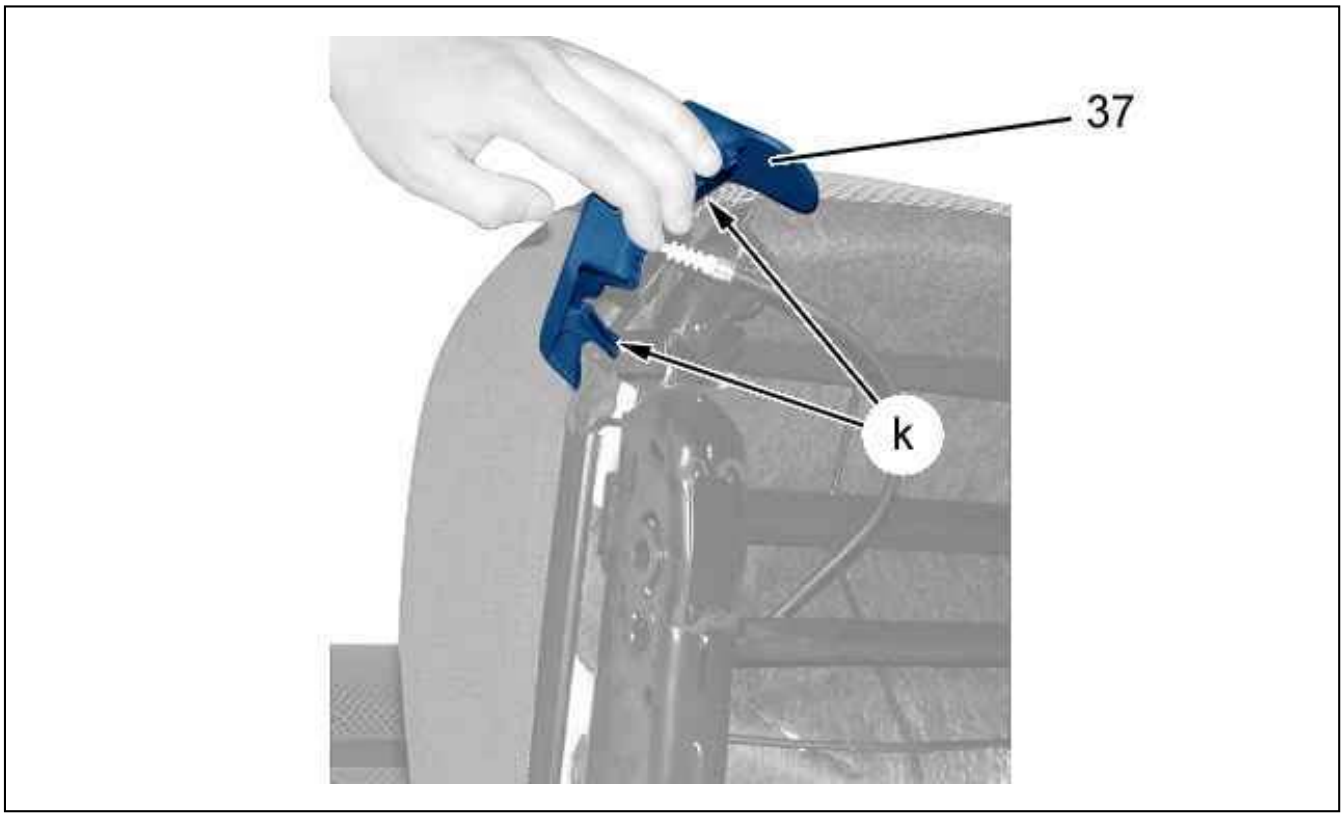

Figure : C5GM0FHD

Unclip - Detach : The handle (37) (at "k").

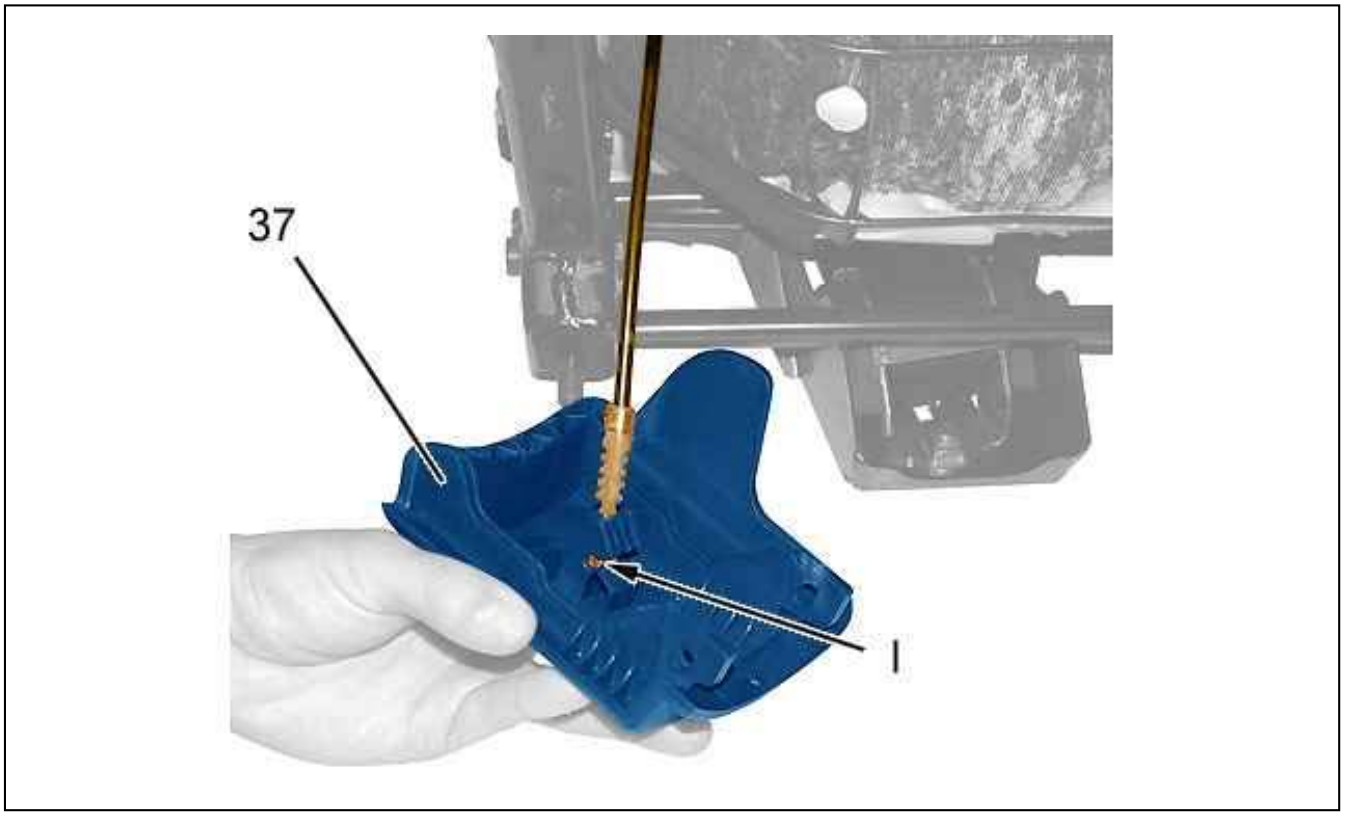

Figure : C5GM0FJD

Release the cable (at "I").
Remove the handle (37).

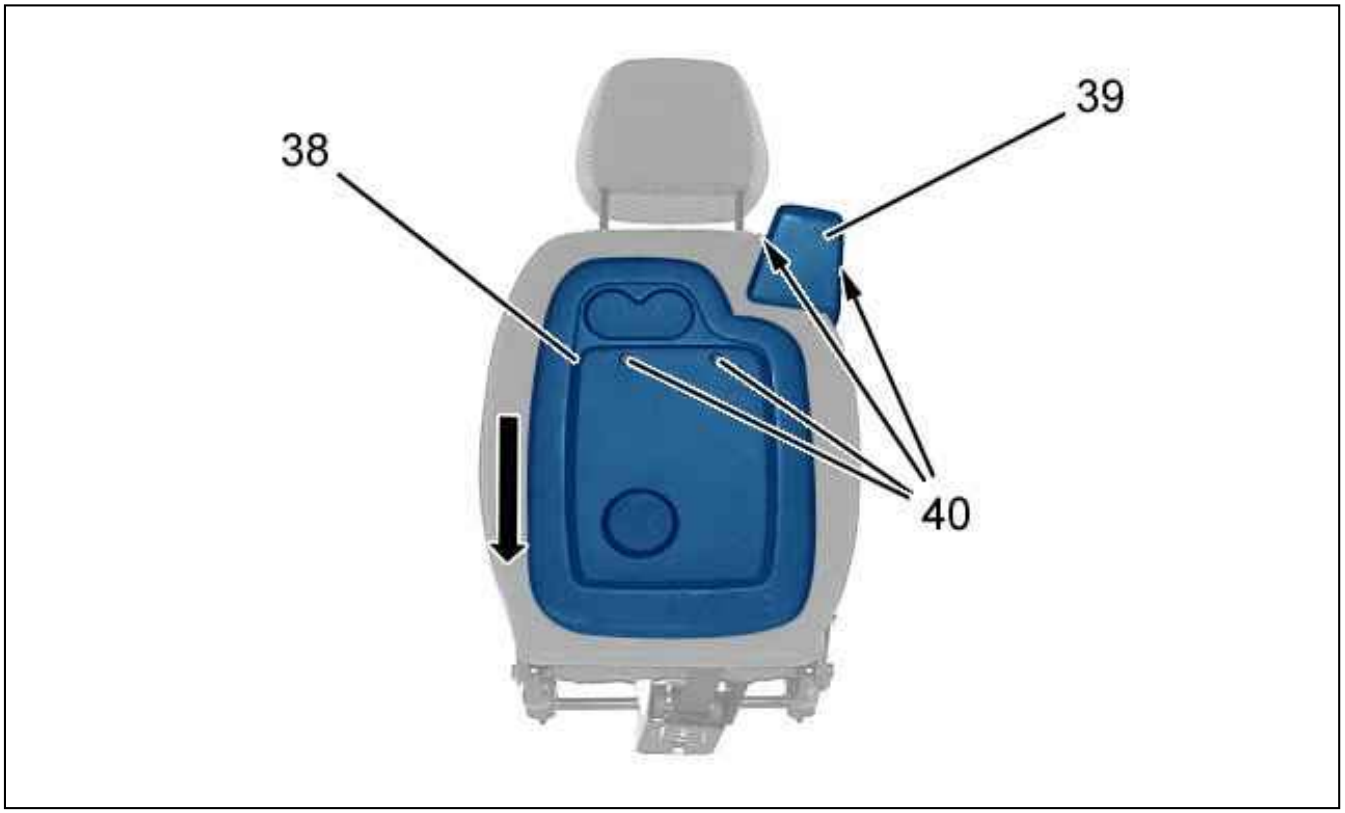

Figure : C5GM0FKD

Remove the bolts (40).
Detach :

- The rear upper trim (38) (following the arrow)
- The seatbelt trim (39)

Remove : The rear upper trim (38).

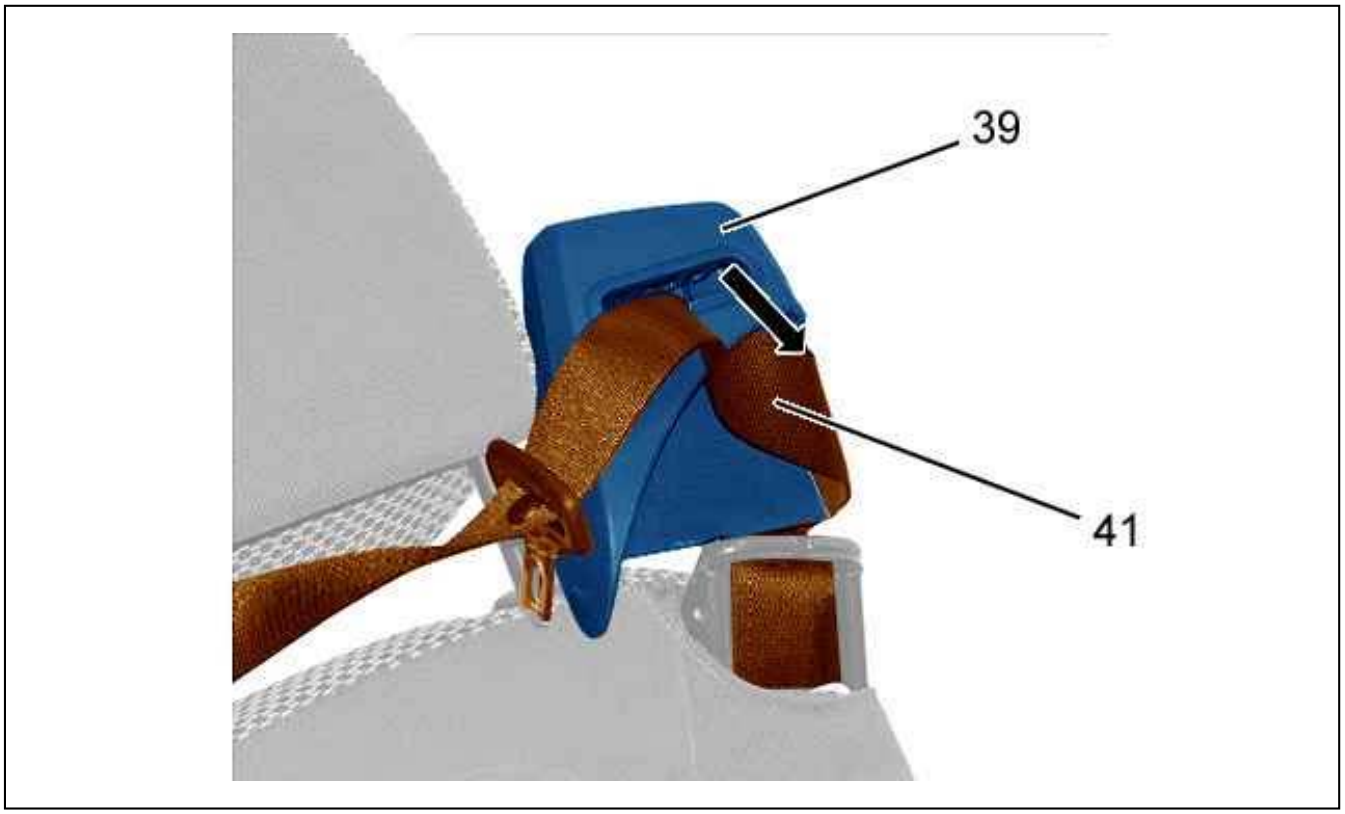

Figure : C5GM0FLD

Detach : The seat belt (41) (following the arrow).
Remove : The seatbelt trim (39).

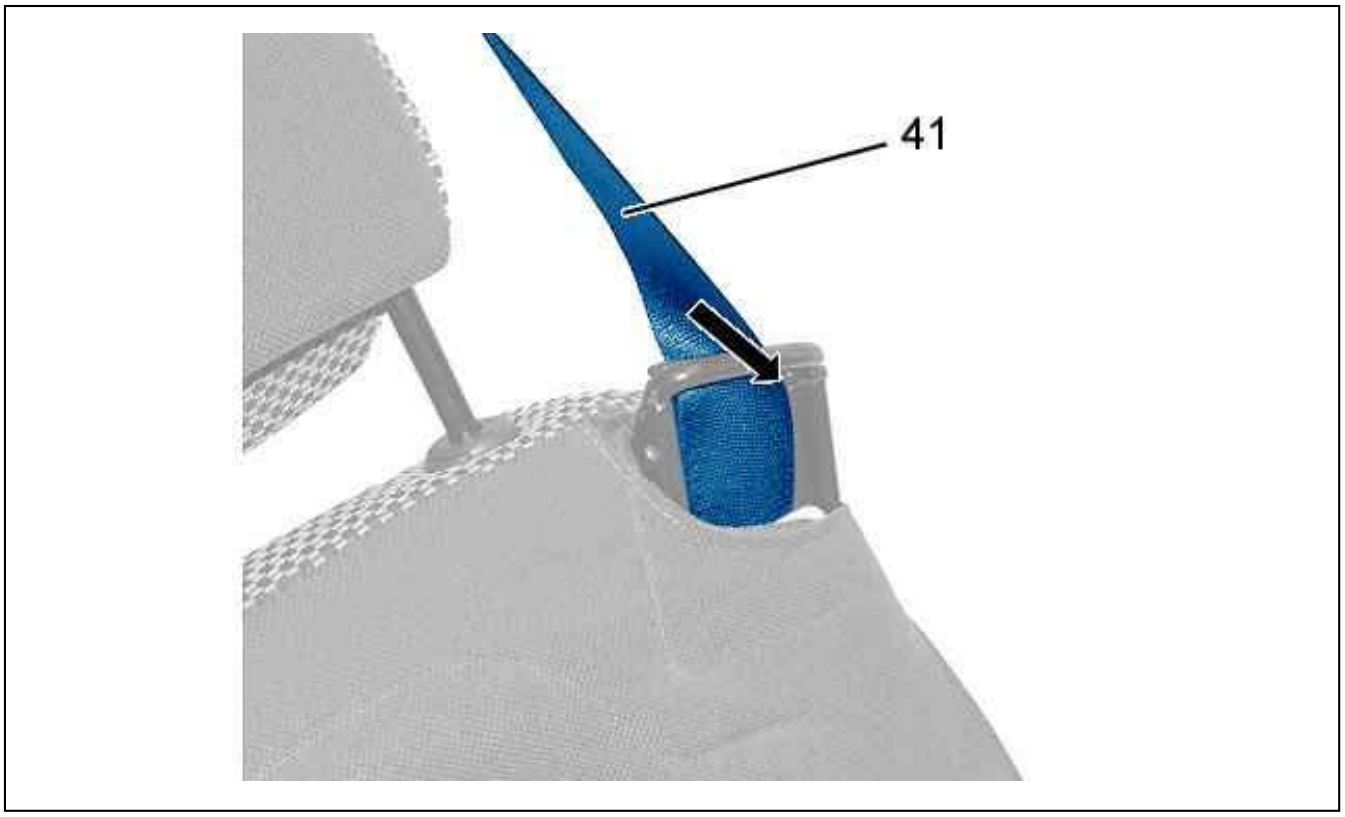

Figure : C5GM0FMD

Detach : The seat belt (41) (following the arrow).

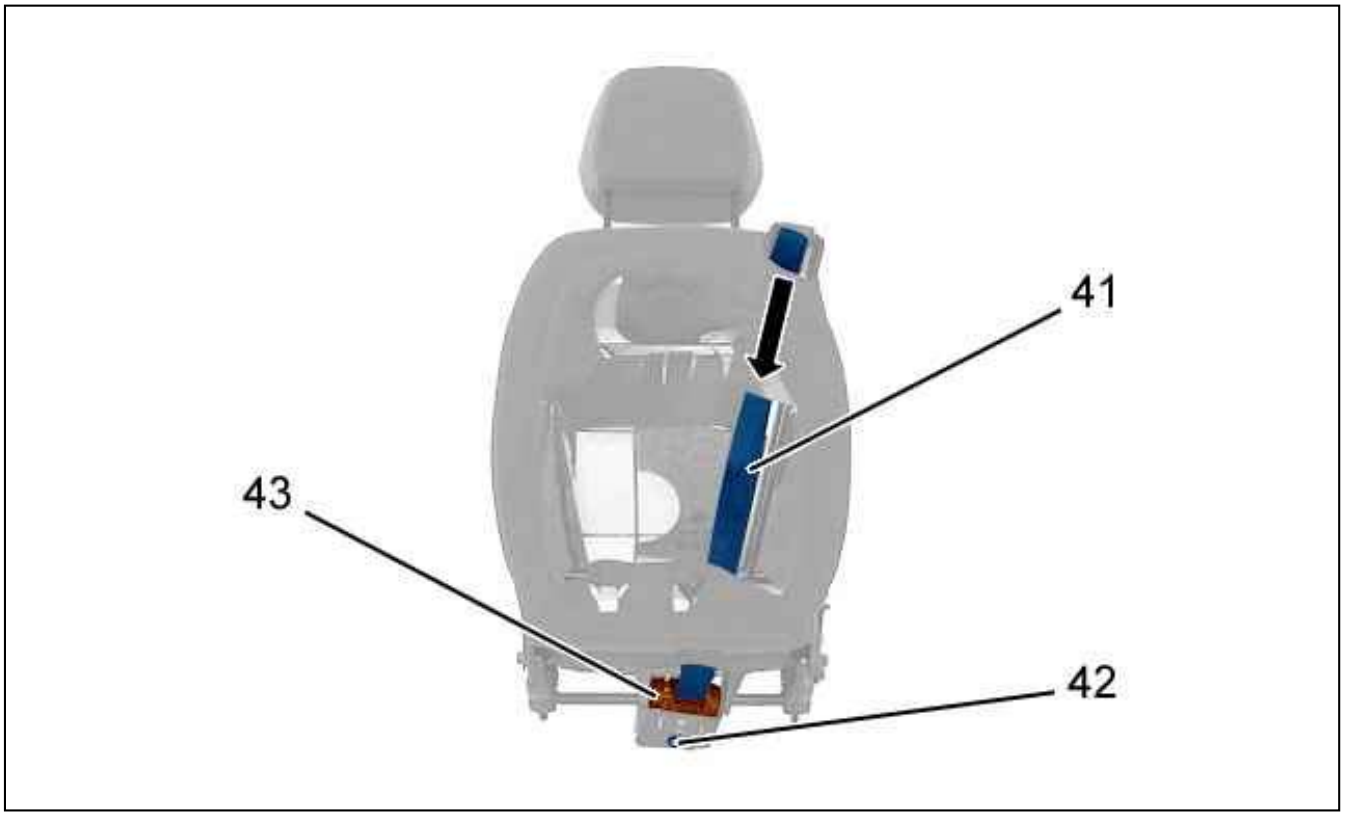

Figure : C5GM0FND

Remove bolts (42).
Detach :

- The seat belt (41) (following the arrow)
- The inertia reel (43)

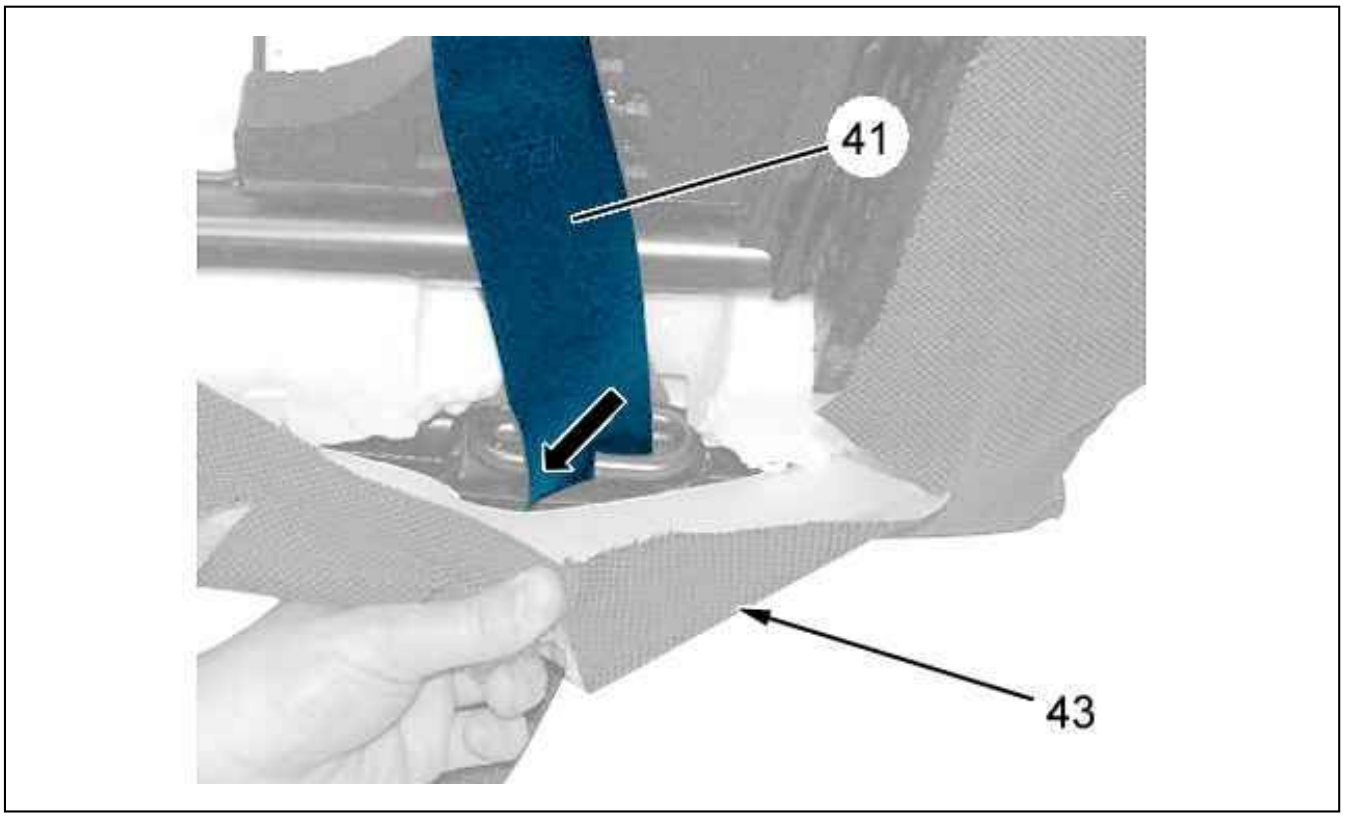

Figure : C5GM0FPD

Detach : The seat belt (41) (following the arrow).
Remove the seat belt reel (43).

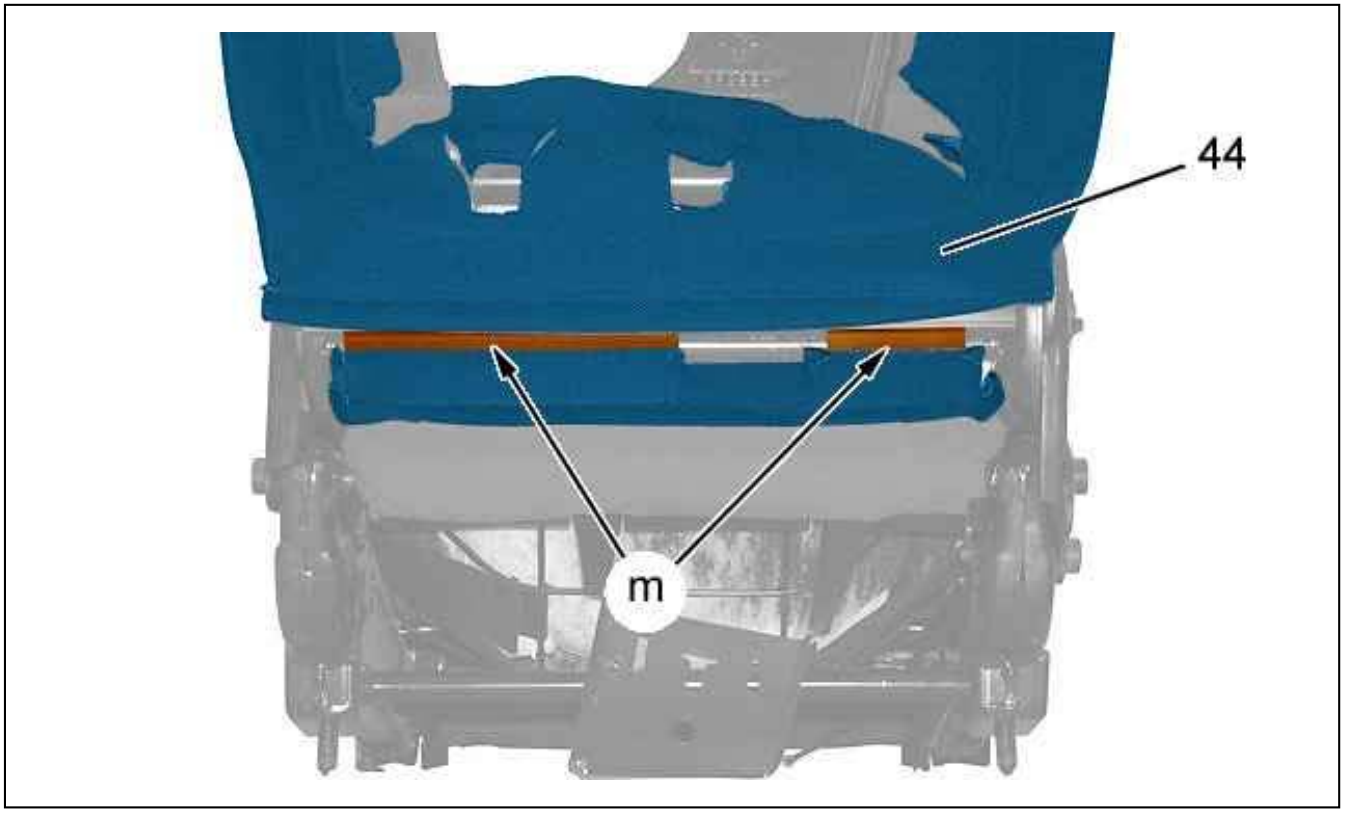

Figure : C5GM0FQD

Unclip : The backrest cover (44) (at "m") ; Using tool [1].

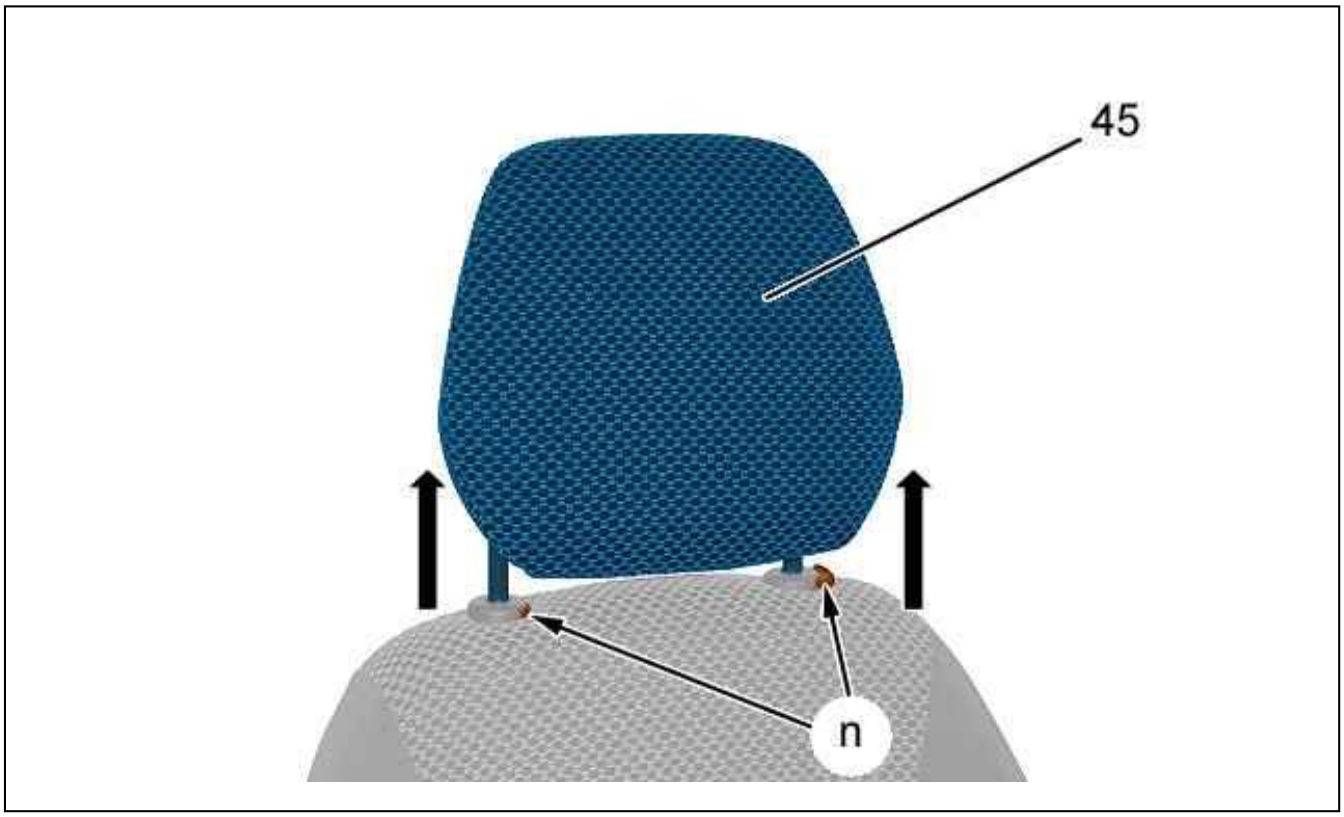

Figure : C5GM0FRD

Unclip : The head restraint (45) (at "n").
Remove the head restraint (45) (as per arrows).

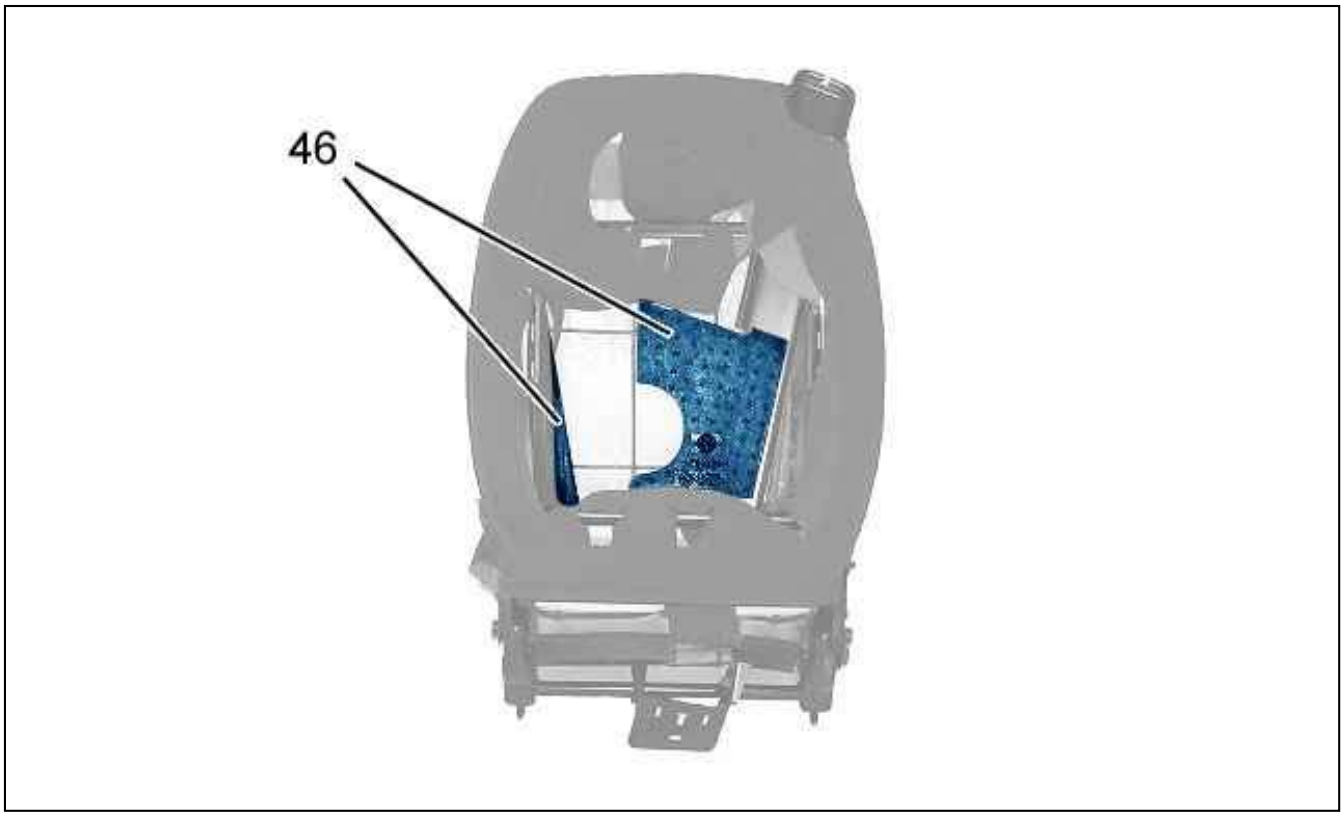

Figure : C5GM0FSD

Remove : Sound deadening material (46).

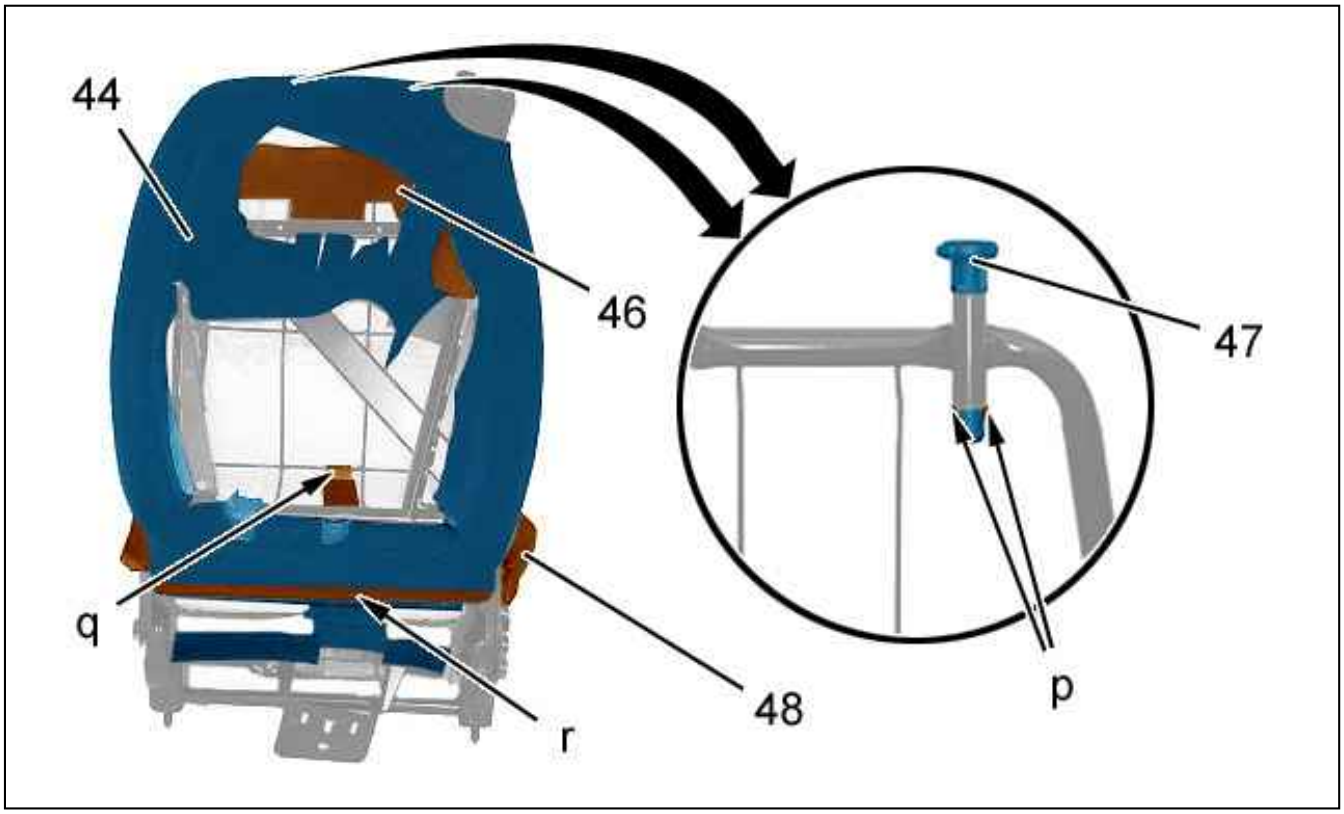

Figure : C5GM0FTD

Remove the sound-proofing material (46).
Unclip :

- The head restraint guide (47) (at "p") (Symmetrical operation)
- The trimmed seat squab cushion (48) (at "r") ; Using tool [1]
- The trimmed seatback cushion (44) (at "q") ; Using tool [1]

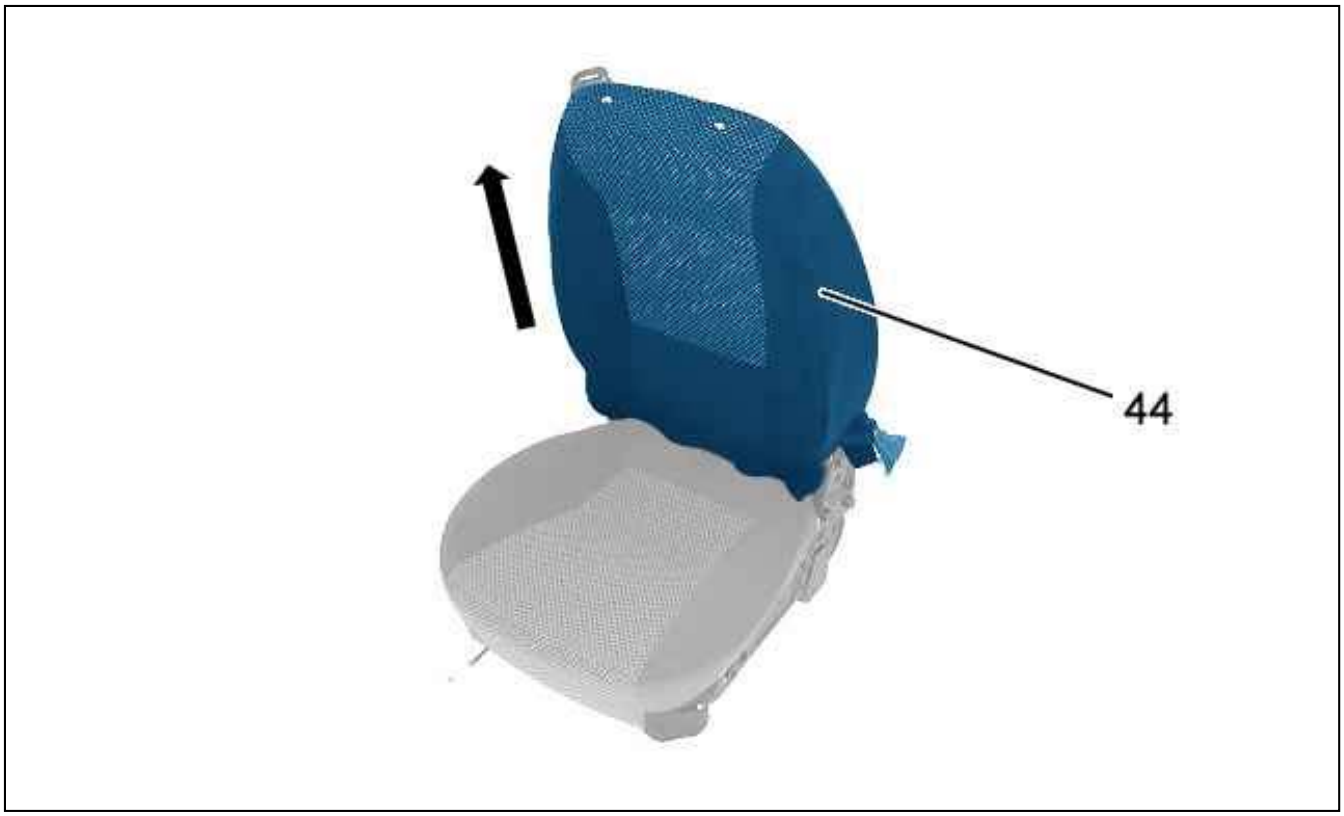

Figure : C5GM0FUD

Remove the covered backrest cushion (44) (following the arrow).

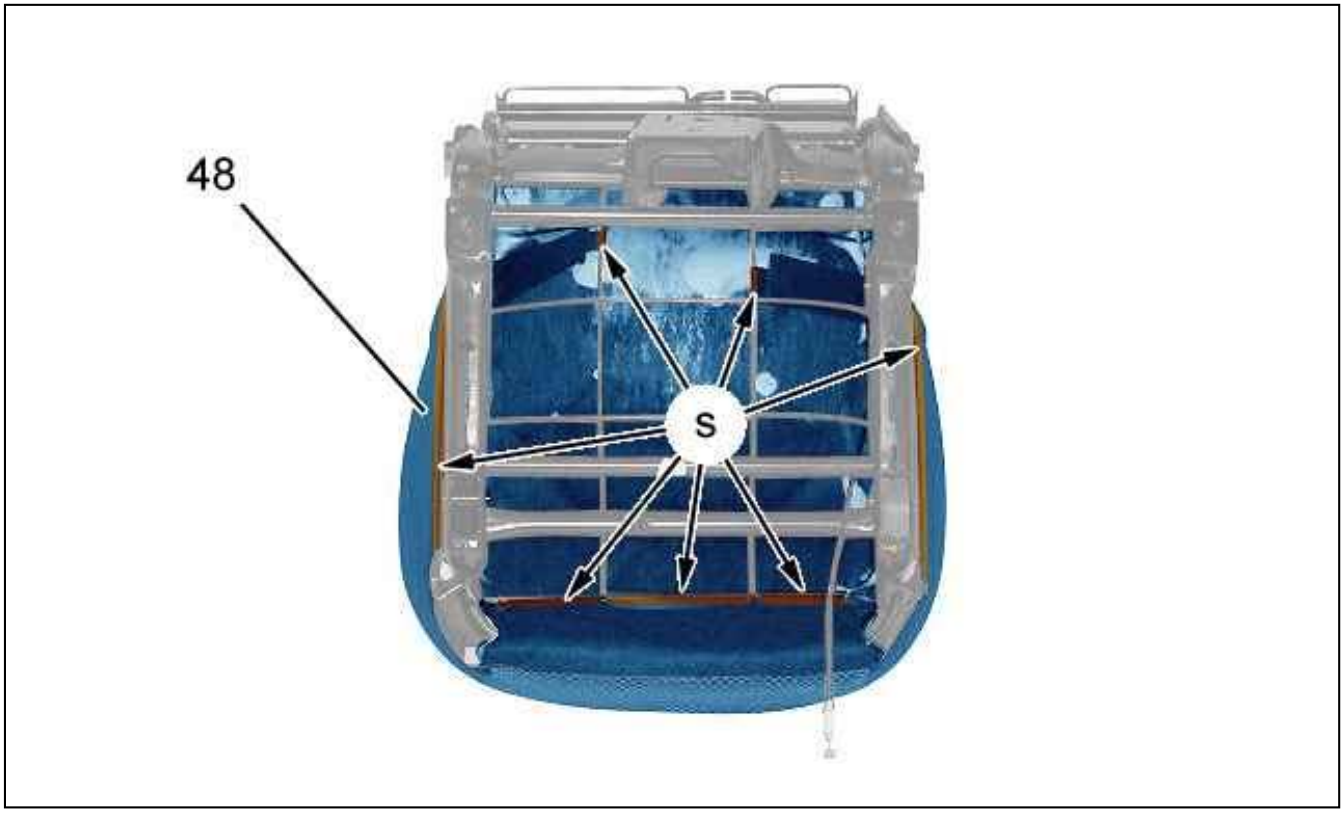

Figure : C5GM0FVD

Unclip : The trimmed seat squab cushion (48) (at "s") ; Using tool [1].

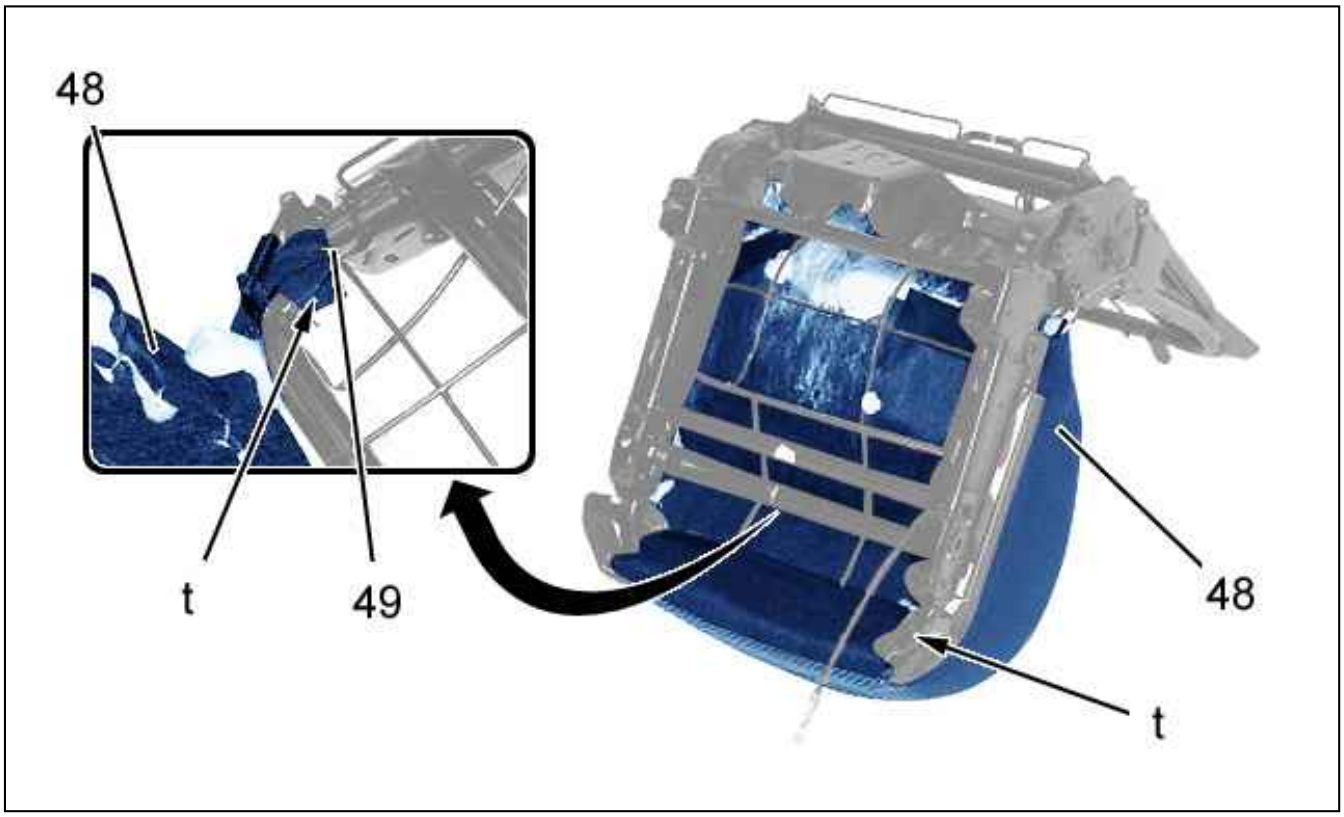

Figure : C5GM0FWD

Remove : The clamping ring (49).
Detach the covered seat cushion (48) (at "t").

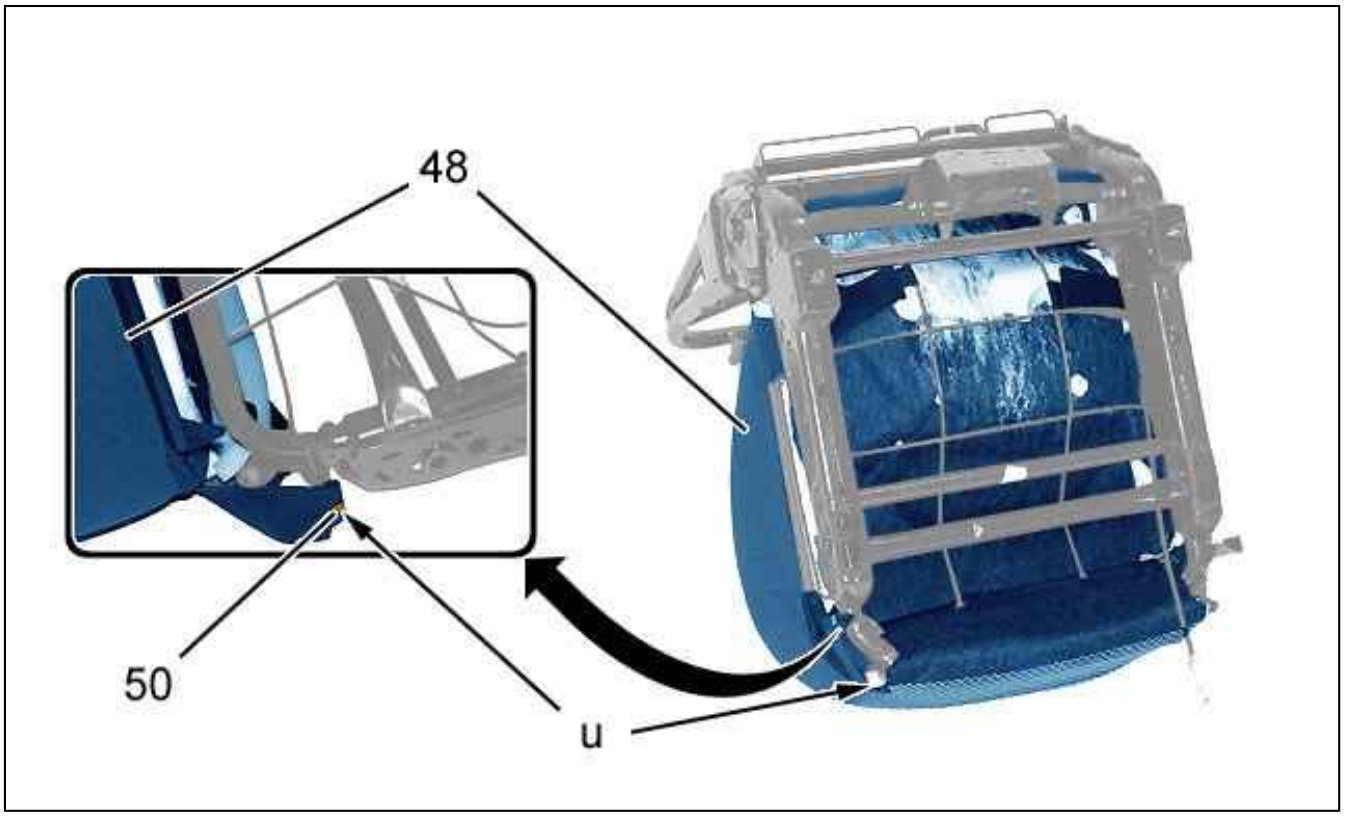

Figure : C5GM0FXD

Unclip the clip (50) (at "u") ; Using tool [1].
Remove the covered seat cushion (47).

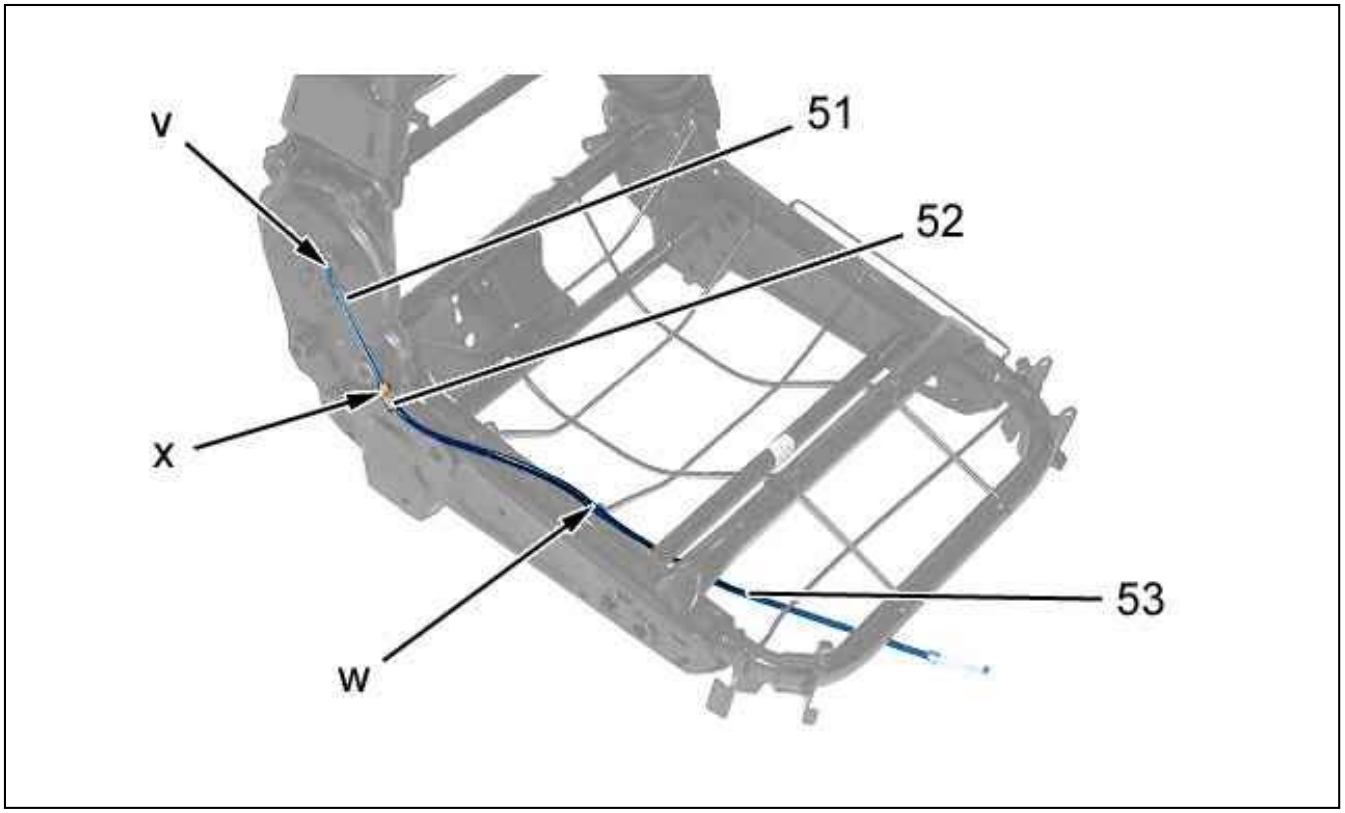

Figure : C5GM0FYD

Detach :

- The outer cable stop (52) (at "v")
- The cable (51) (at "w")
- The sleeve (53) (at "x")

Remove : The cable inner (51) and outer (53) assembly.

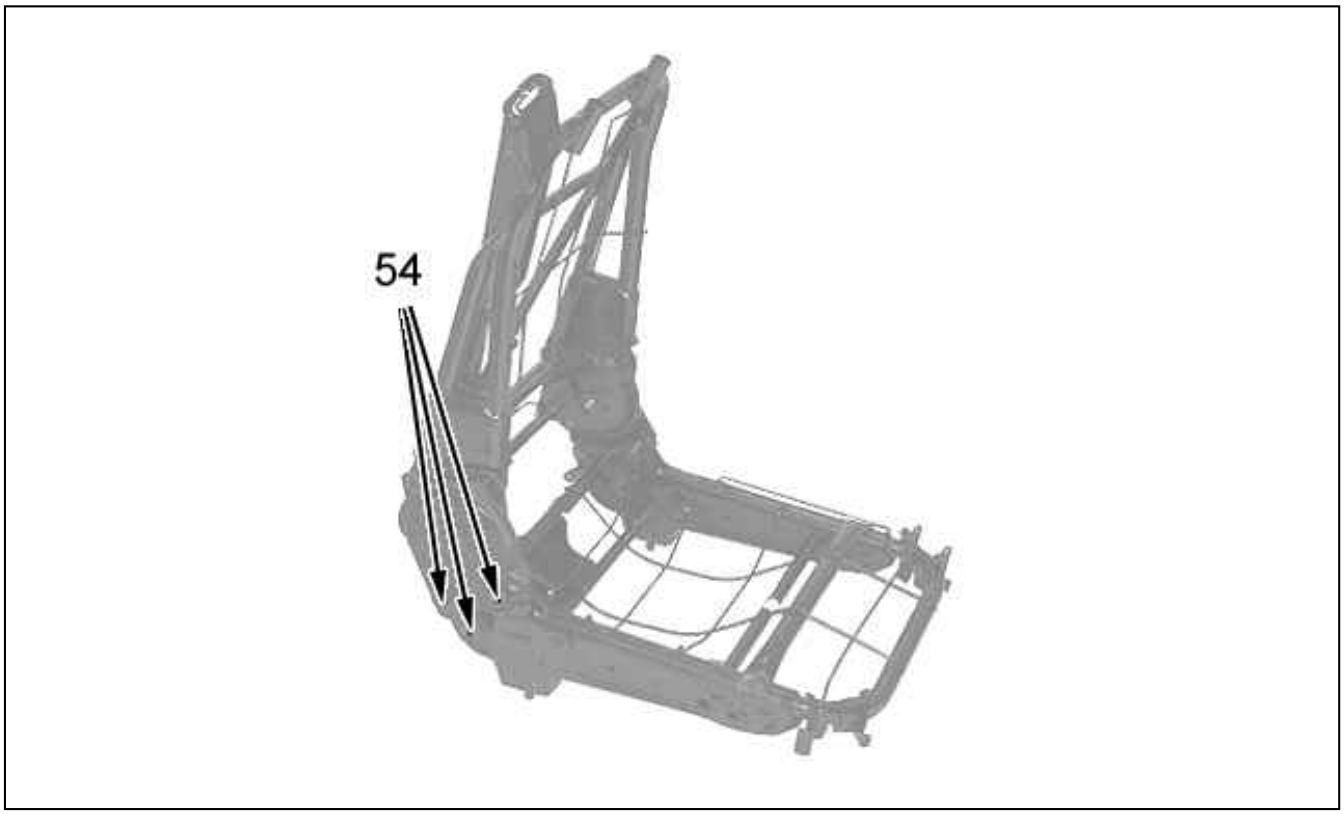

Figure : C5GM0FZD

Remove the bolts (54).

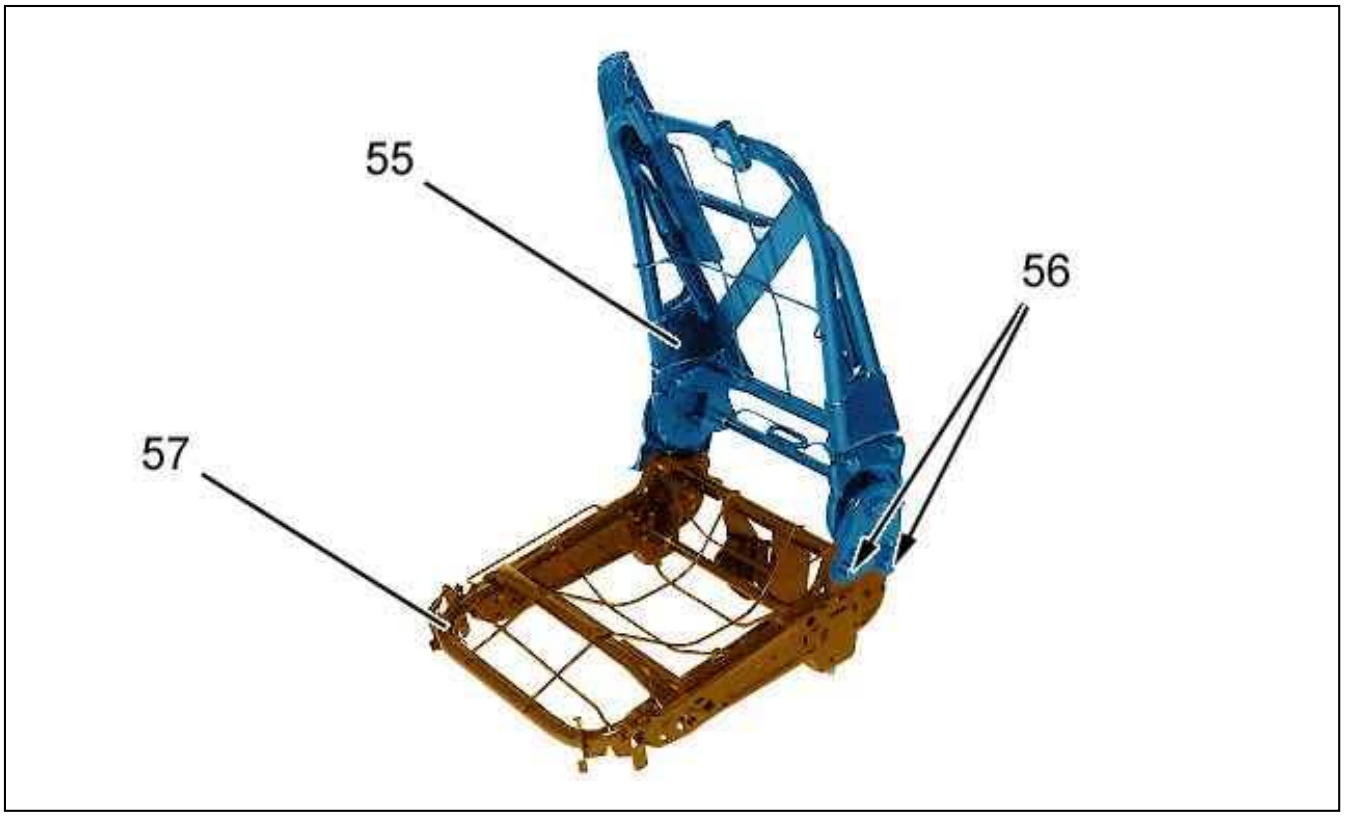

Figure : C5GM0G0D

Remove :

- The bolts (56)
- The upper frame (55)
- The lower frame (57)

4. Re-assembling

ESSENTIAL : Always replace the damaged fixings.

Carry out the re-trim operations in the reverse order to the stripping operations.
Tighten :

- The nuts (5), (7) to 2 ± 0,4 daN.m
- The bolts (16) to 2 ± 0,4 daN.m
- The bolts (4), (6), (8), (11), (14), (27), (42) to 4,2 ± 0,8 daN.m
- The bolts (54), (56) to 5,3 ± 0,7 daN.m
- The nuts (12) to 4,3 ± 0,8 daN.m

Check all the equipment works.

STRIPPING-ASSEMBLING : FRONT SEAT

ESSENTIAL : Observe the safety and cleanliness recommendations .

1. Tooling

Tool	Reference	Designation
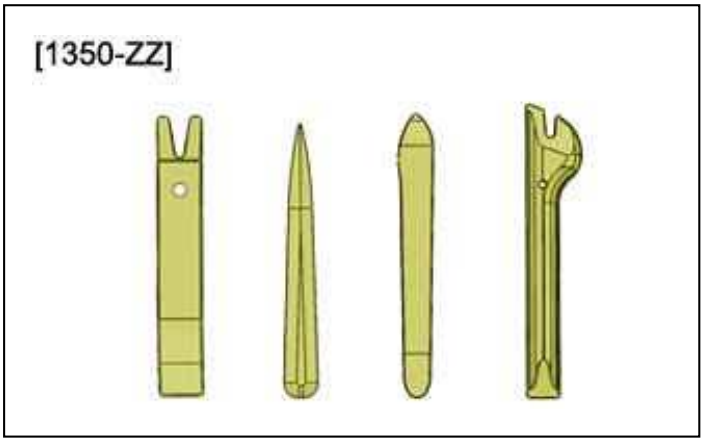 Figure : E5AG02MT	[1350-ZZ]	Stripping tools

2. Stripping

2.1. Front seat

Remove the front seat .

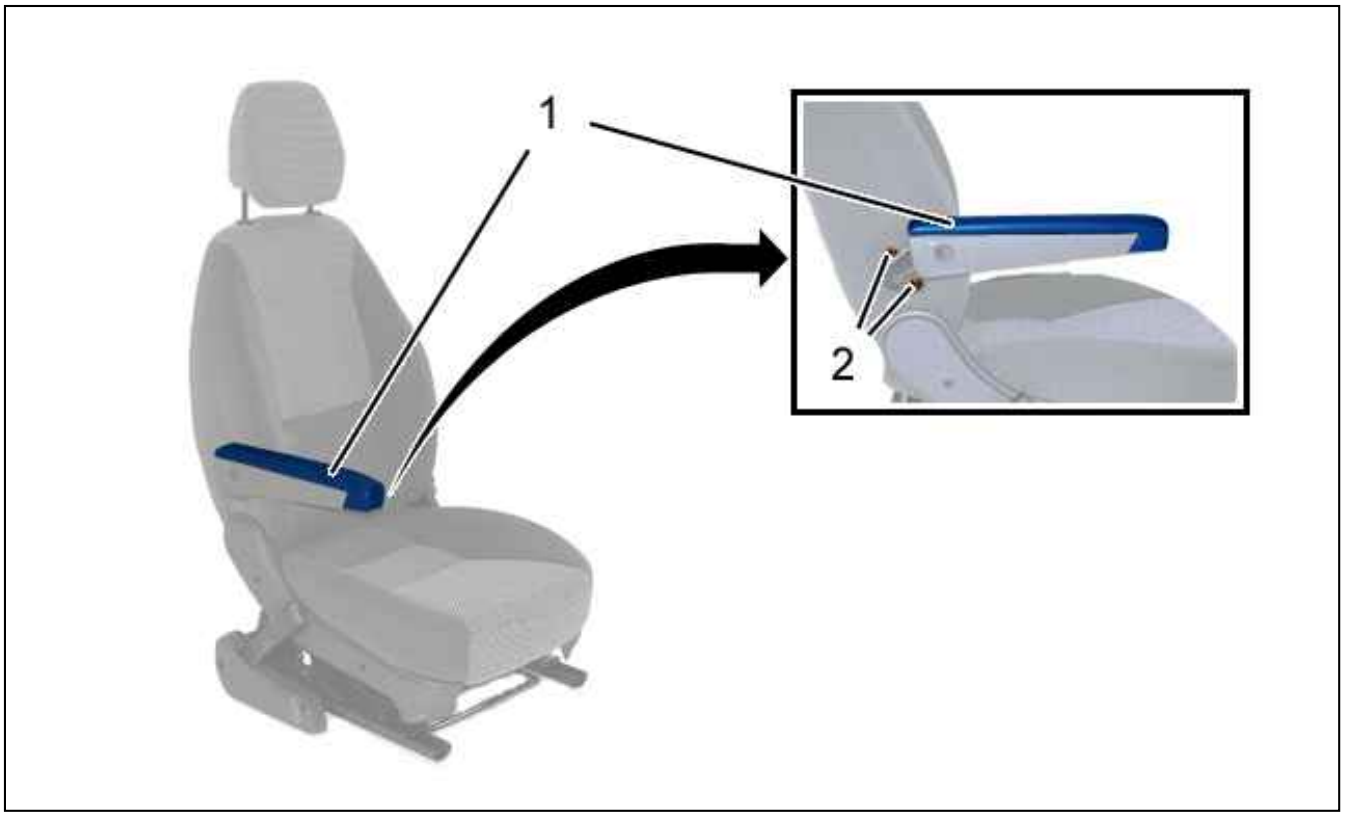

Figure : C5GM0B5D

Remove :

- The bolts (2)
- Armrest (1)

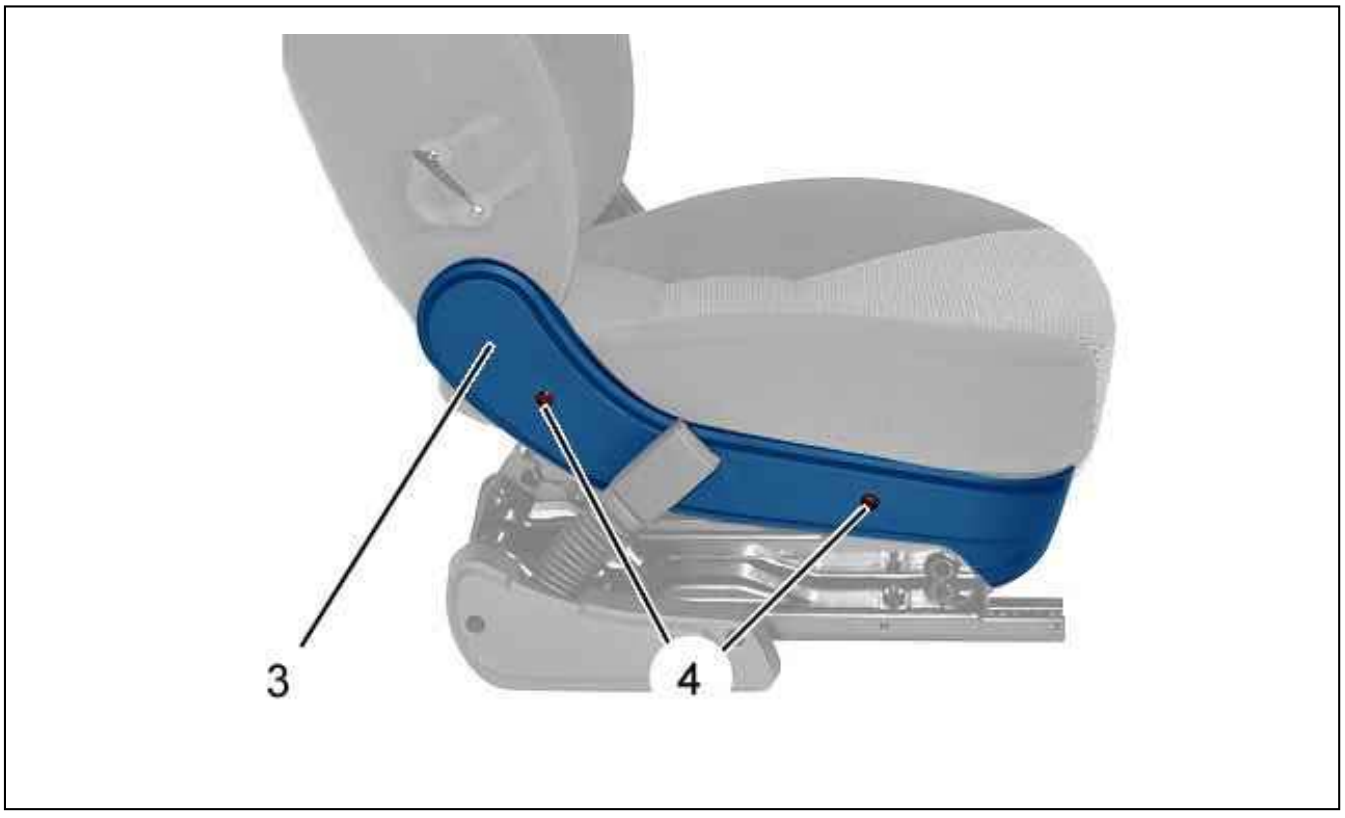

Figure : C5GM0B6D

Remove :

- The bolts (4)
- The trim (3)

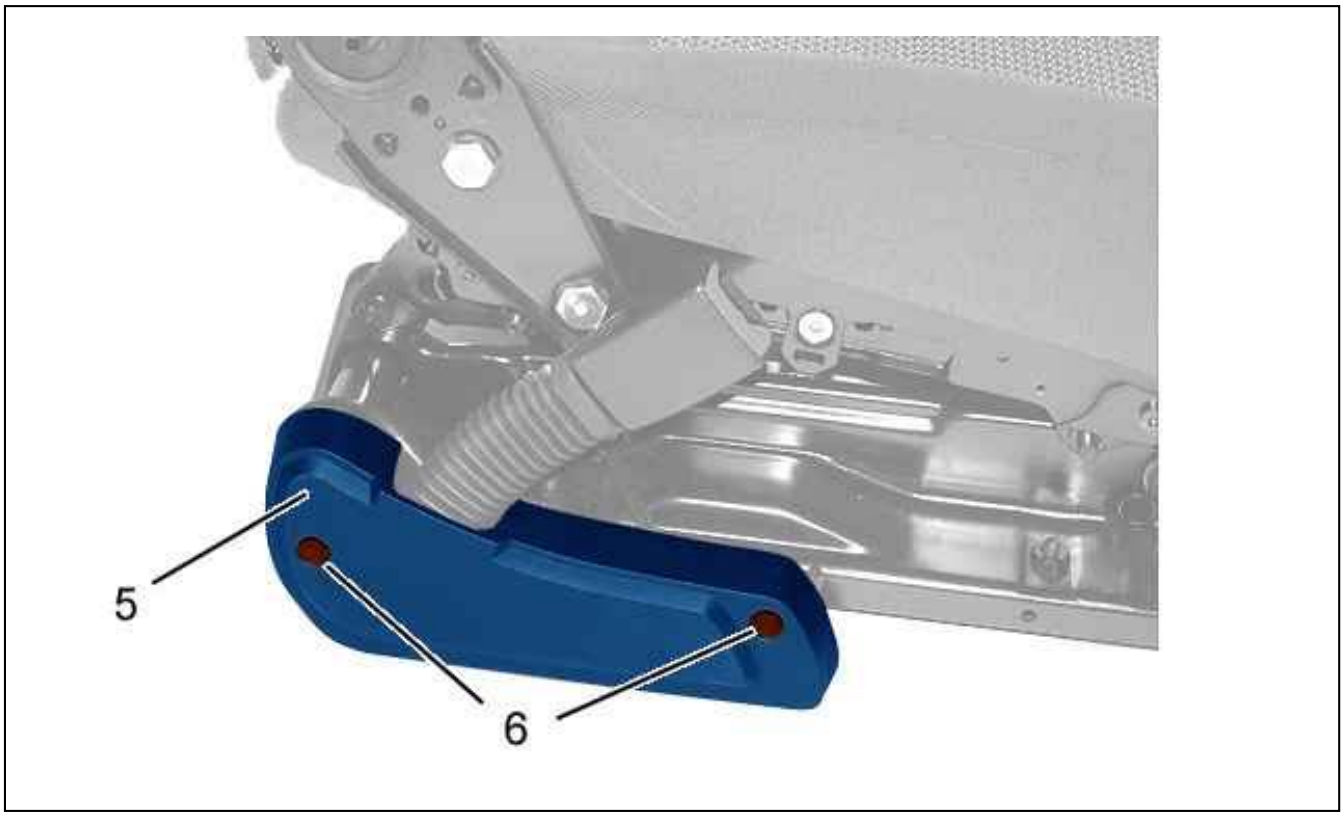

Figure : C5GM0B7D

Remove :

- The bolts (6)
- The trim (5)

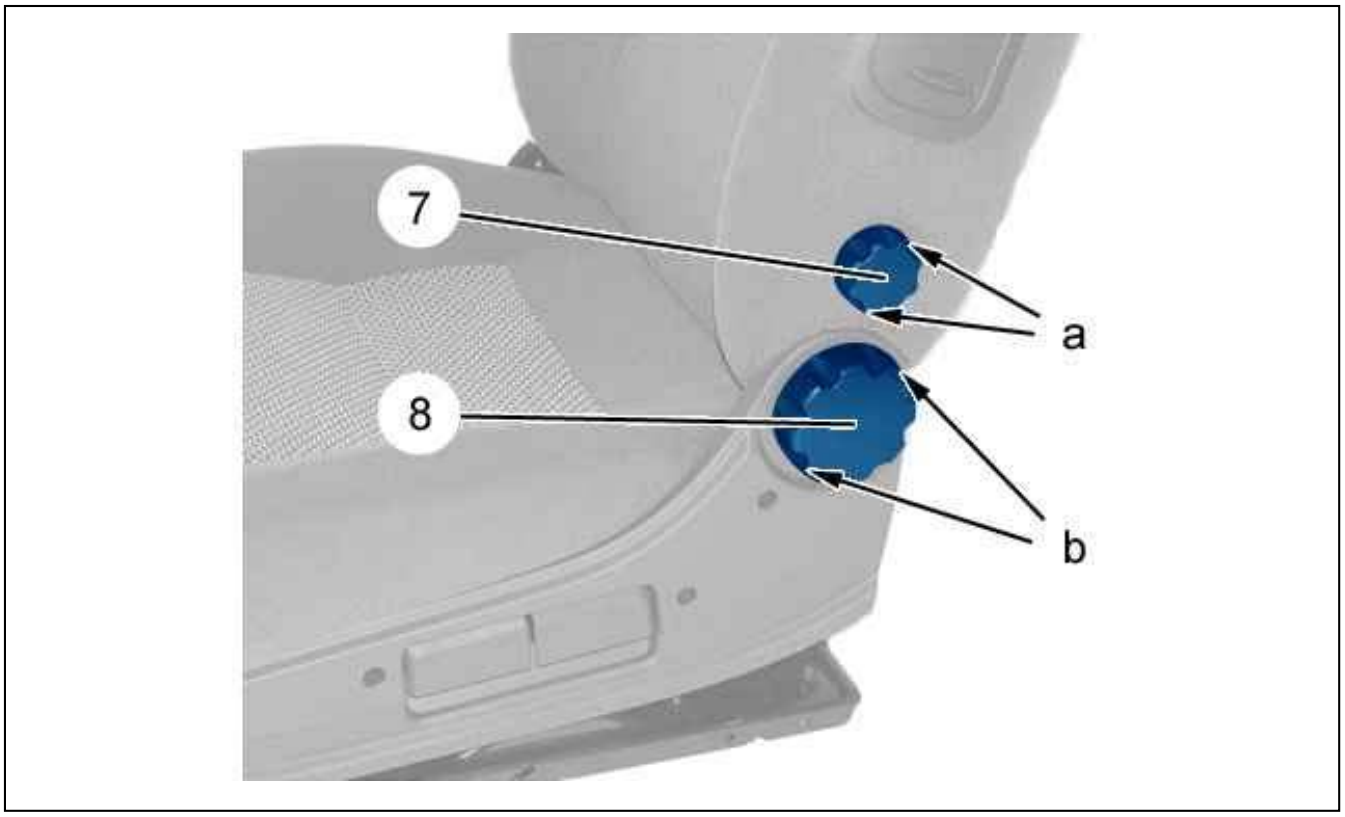

Figure : C5GM0B8D

Unclip the lumbar adjustment control (7) from the seat backrest (at "a") ; Using tool [1350-ZZ].
Remove the lumbar adjustment control (7).
Unclip the seat backrest adjustment control (8) (at "b") ; Using tool [1350-ZZ].
Remove the seat backrest adjustment control (8).

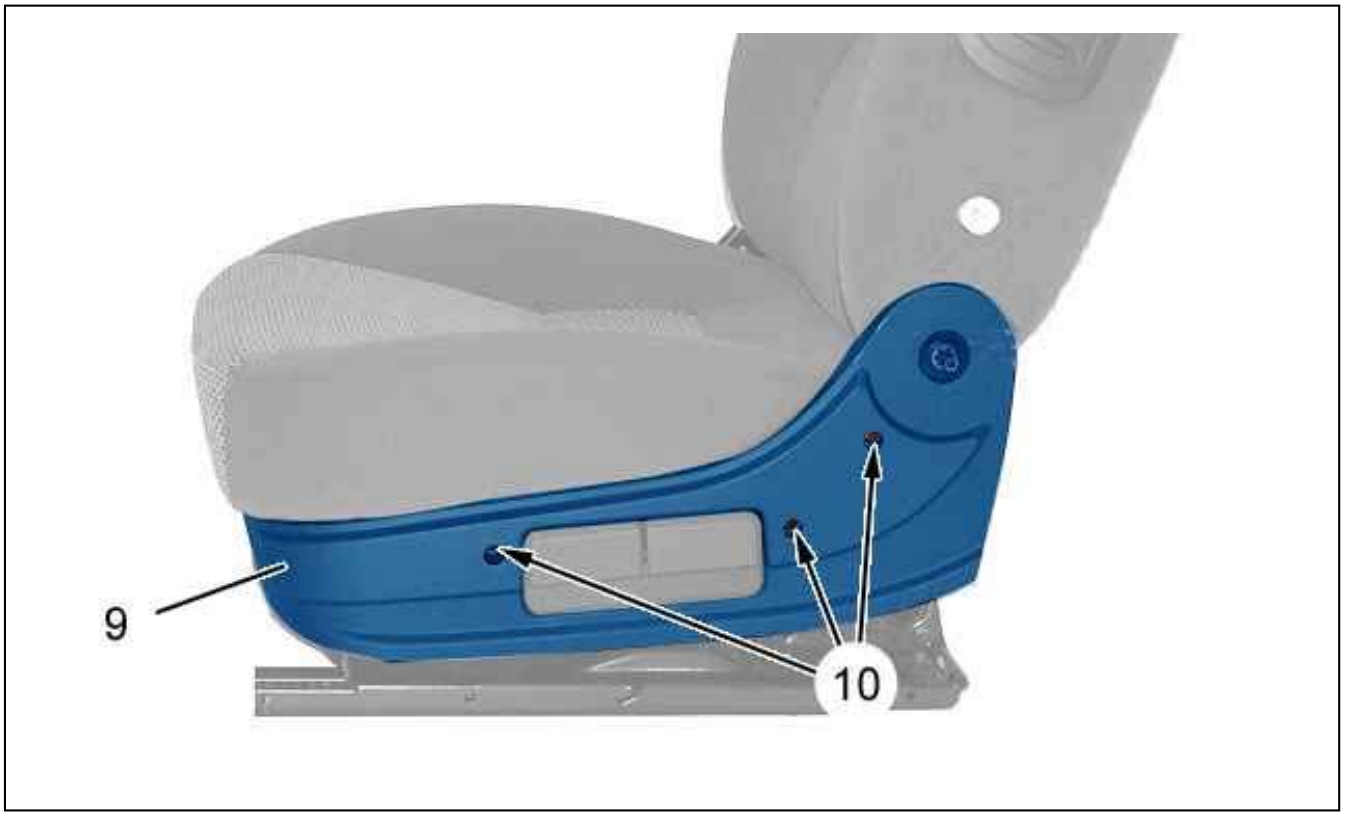

Figure : C5GM0B9D

Remove :

- The bolts (10)
- The trim (9)

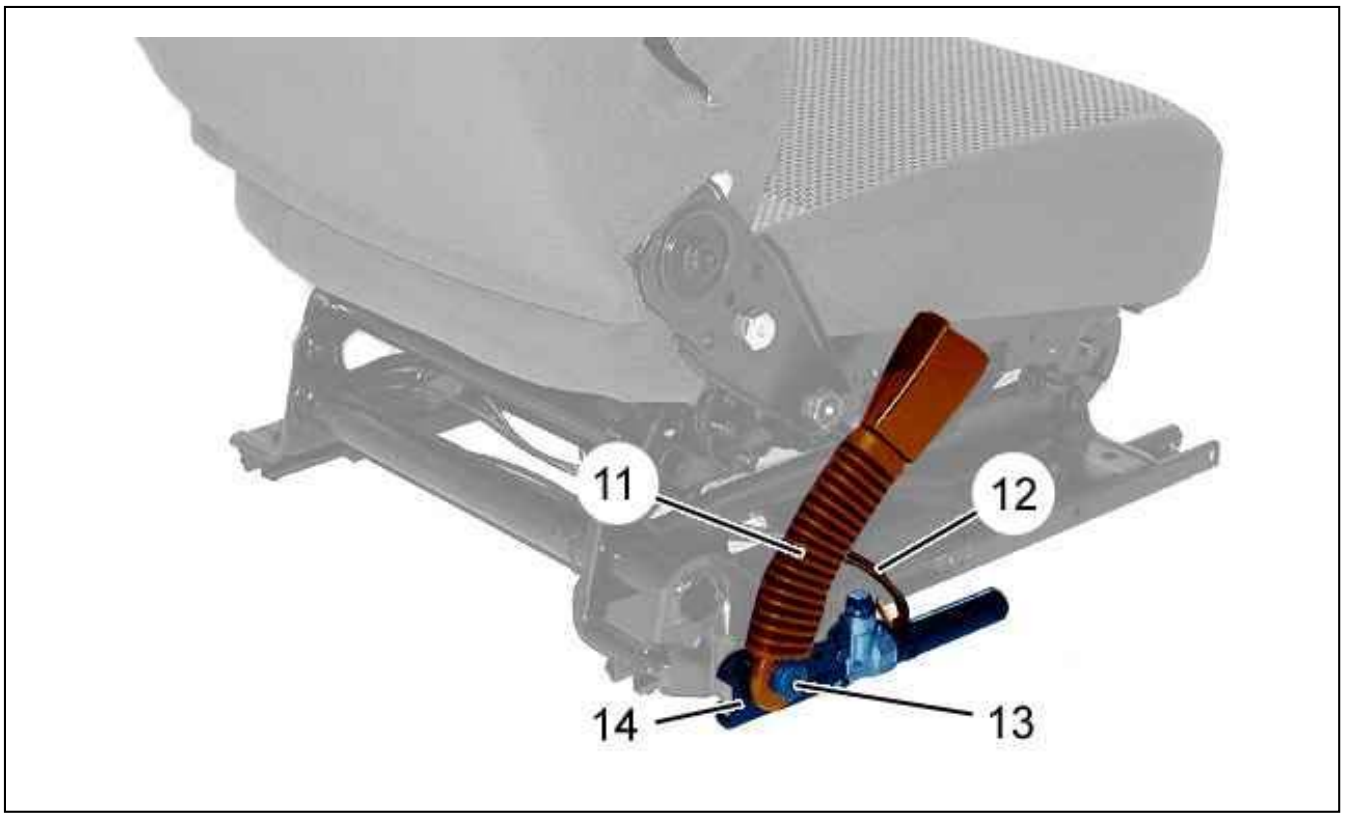

Figure : C5GM0BAD

Remove the bolt (13).
Detach the seat belt buckle strap (11).
Remove the support (14).
Release the harness (12) by cutting the cable ties .
Remove the seat belt buckle strap (11).

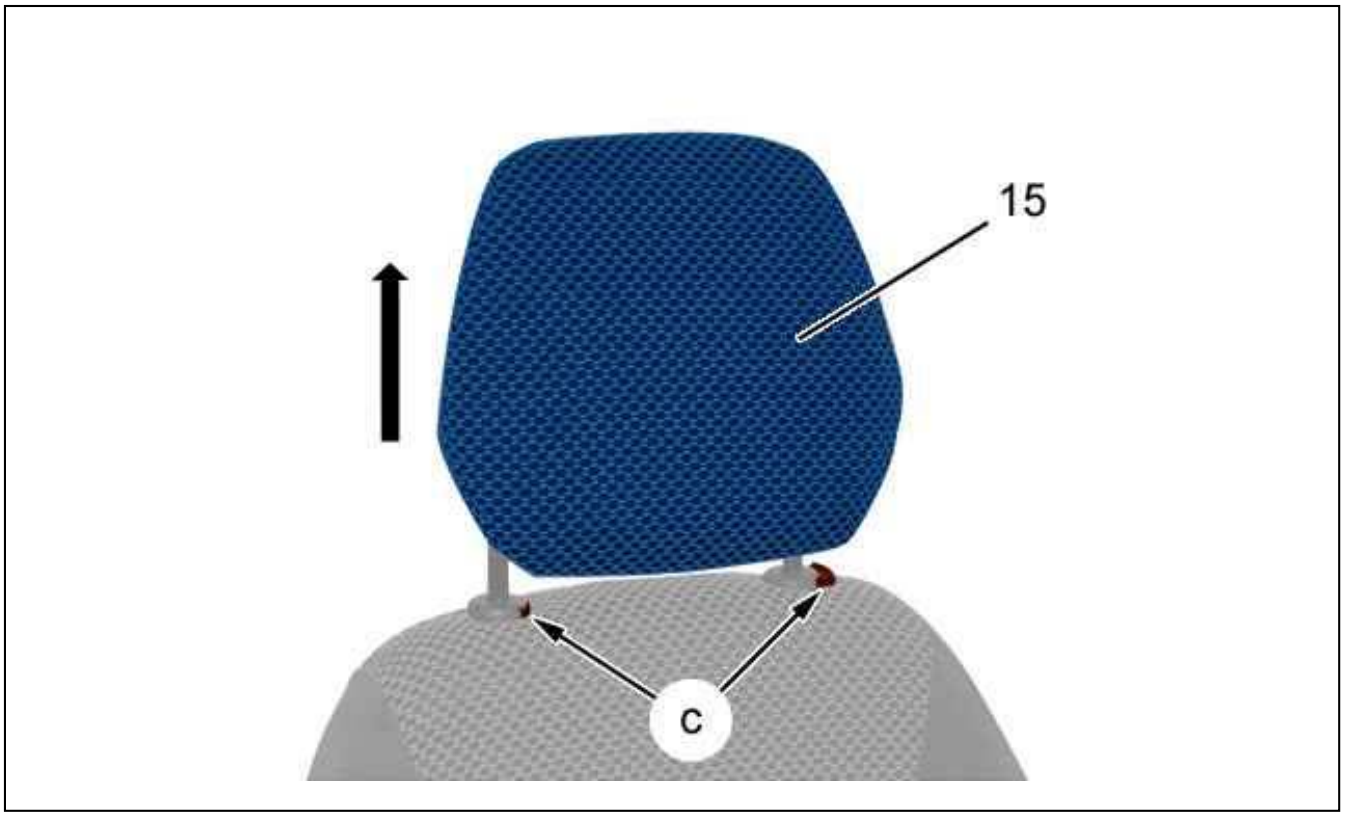

Figure : C5GM0BBD

Unclip the head restraint (15) (at "c").
Remove the head restraint (15) (following the arrow).

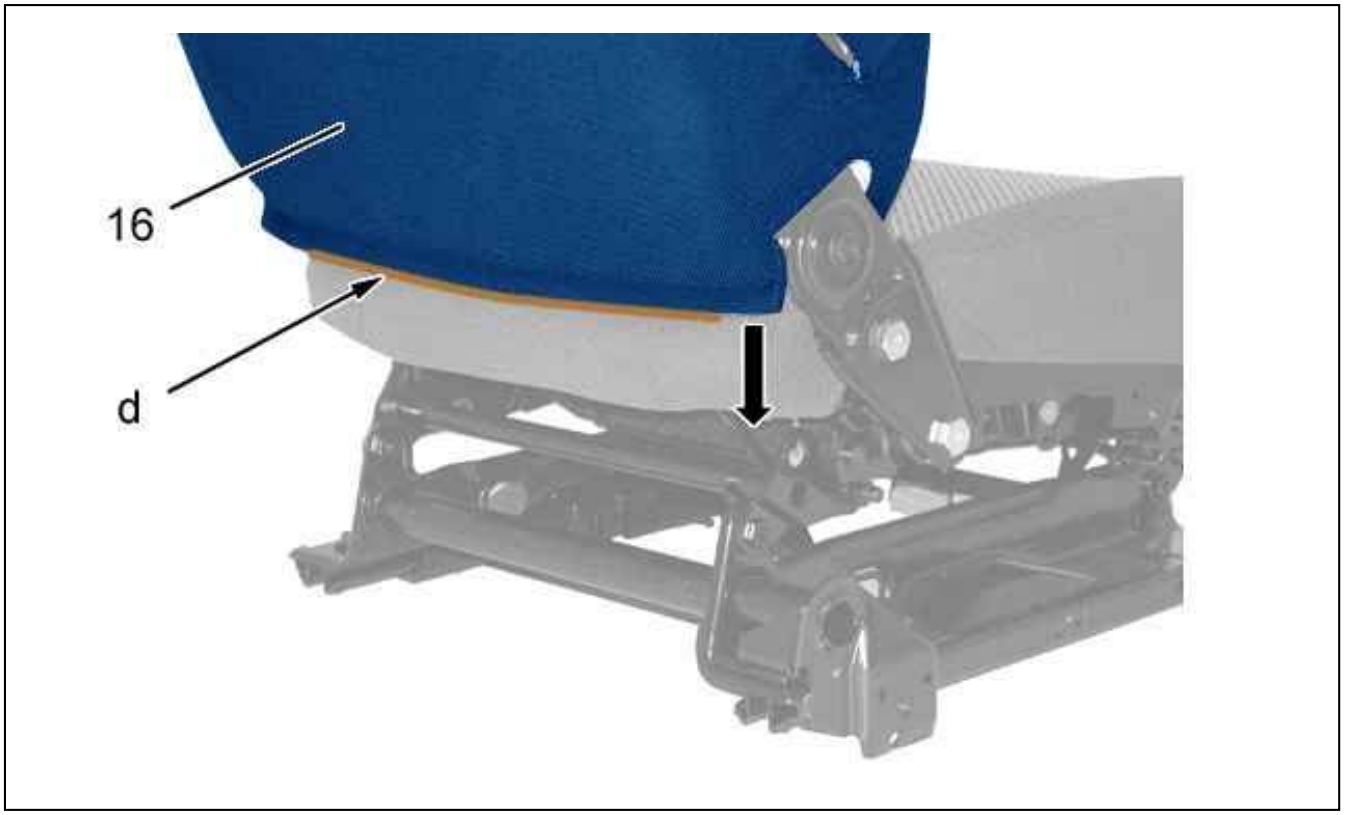

Figure : C5GM0BCD

Unclip the backrest cover (16) (at "d") (following the arrow).

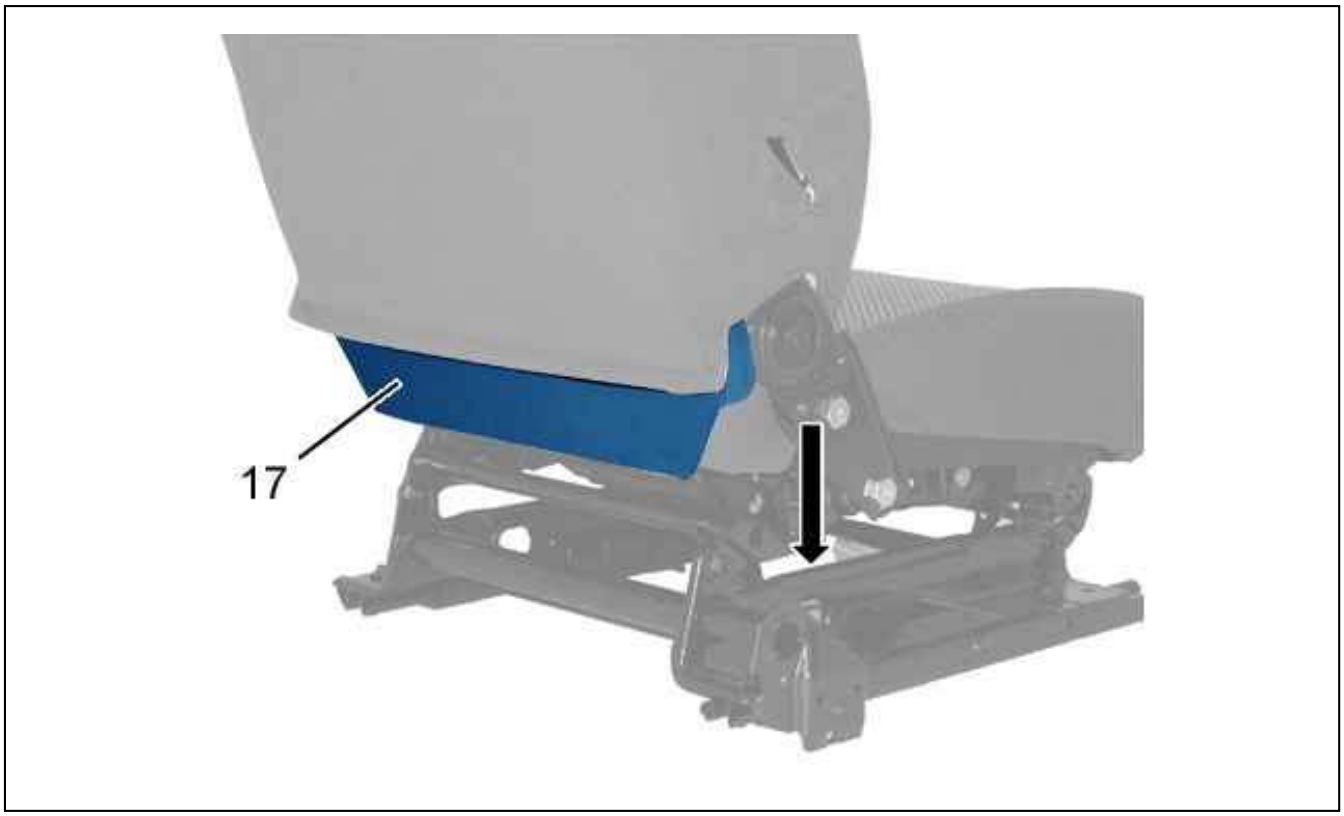

Figure : C5GM0BDD

Remove the cardboard strengthener (17) (following the arrow).



Figure : C5GM0BED

Detach the backrest cover (16) (following the arrow).

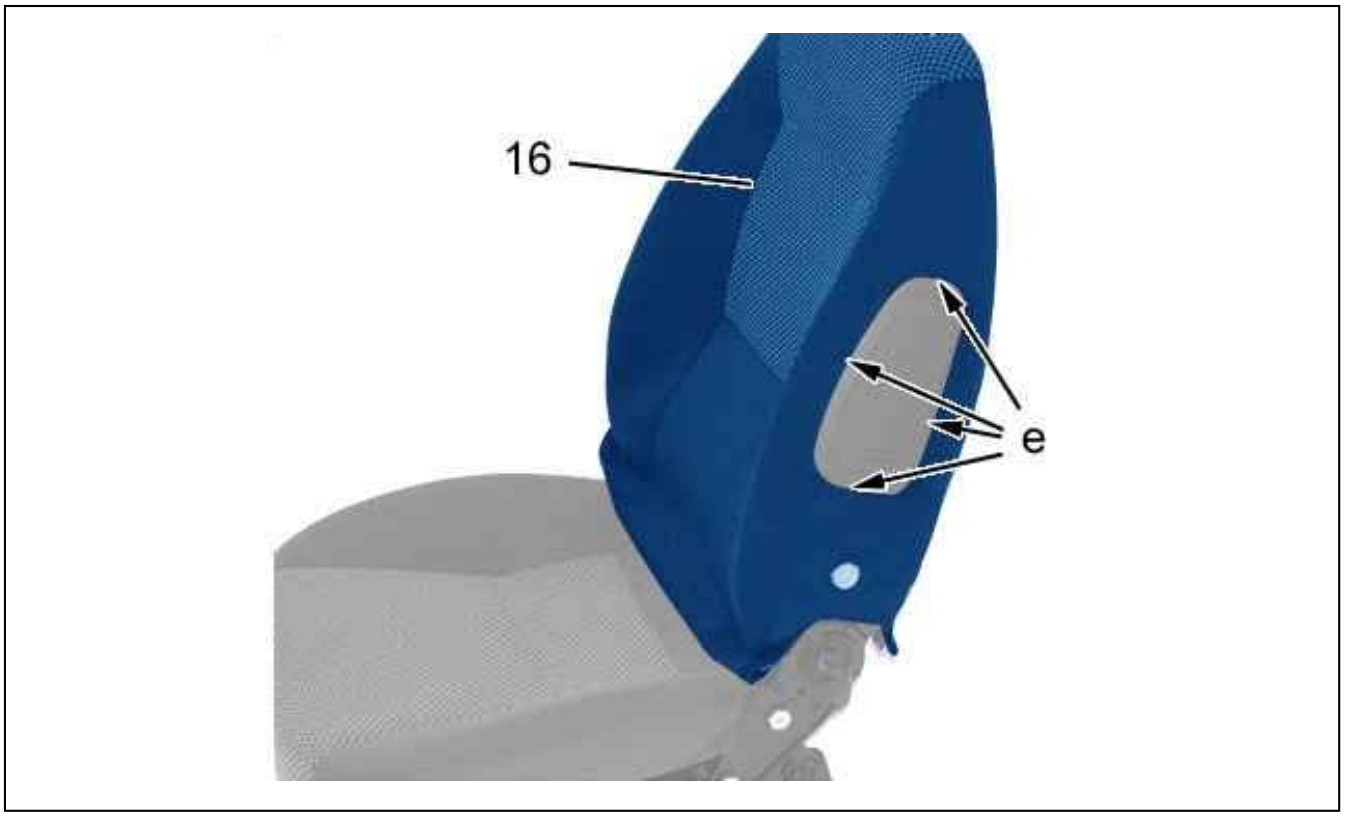

Figure : C5GM0BFD

Detach the backrest cover (16) (at "e") ; Using tool [1350-ZZ].

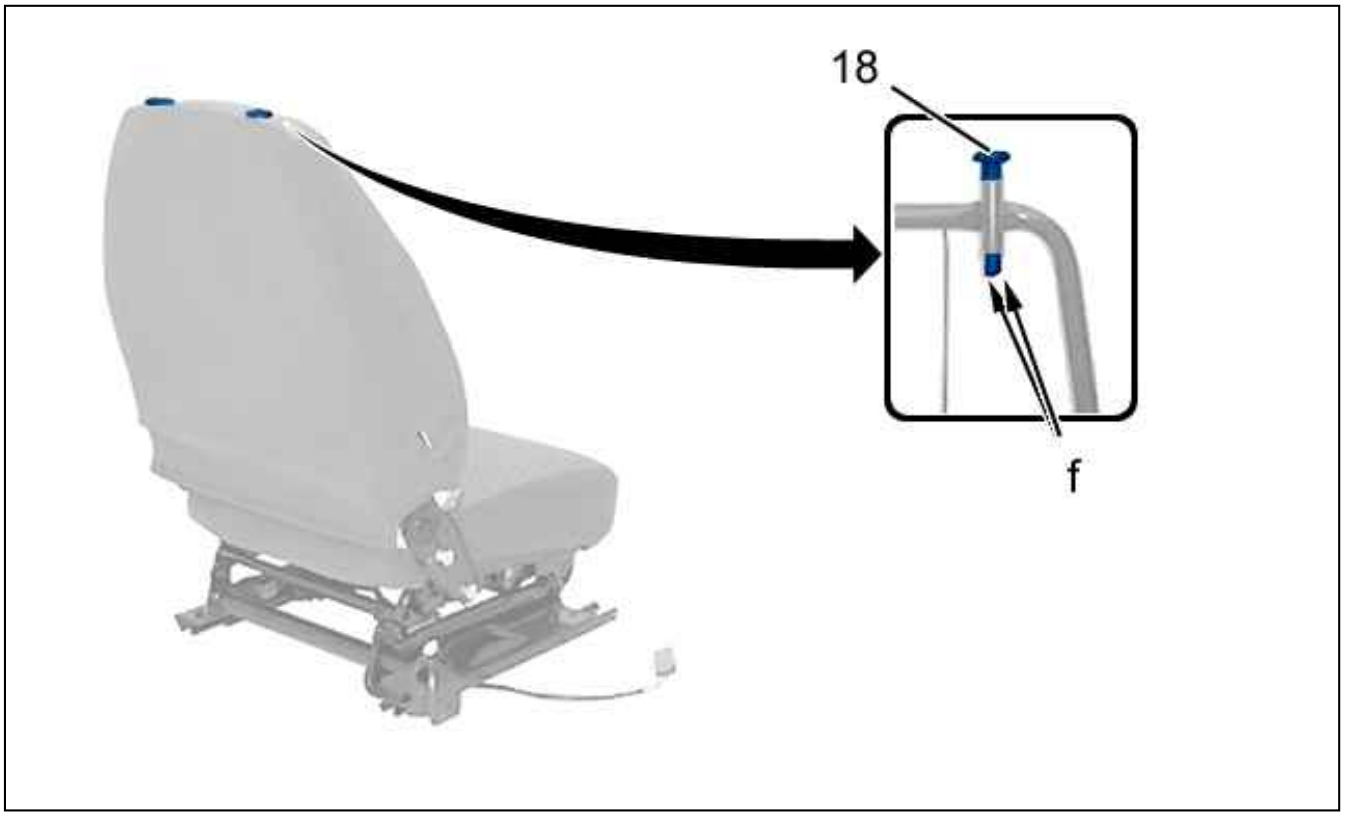

Figure : C5GM0BGD

Unclip the head restraint guide (18) (at "f") (Symmetrical operation).

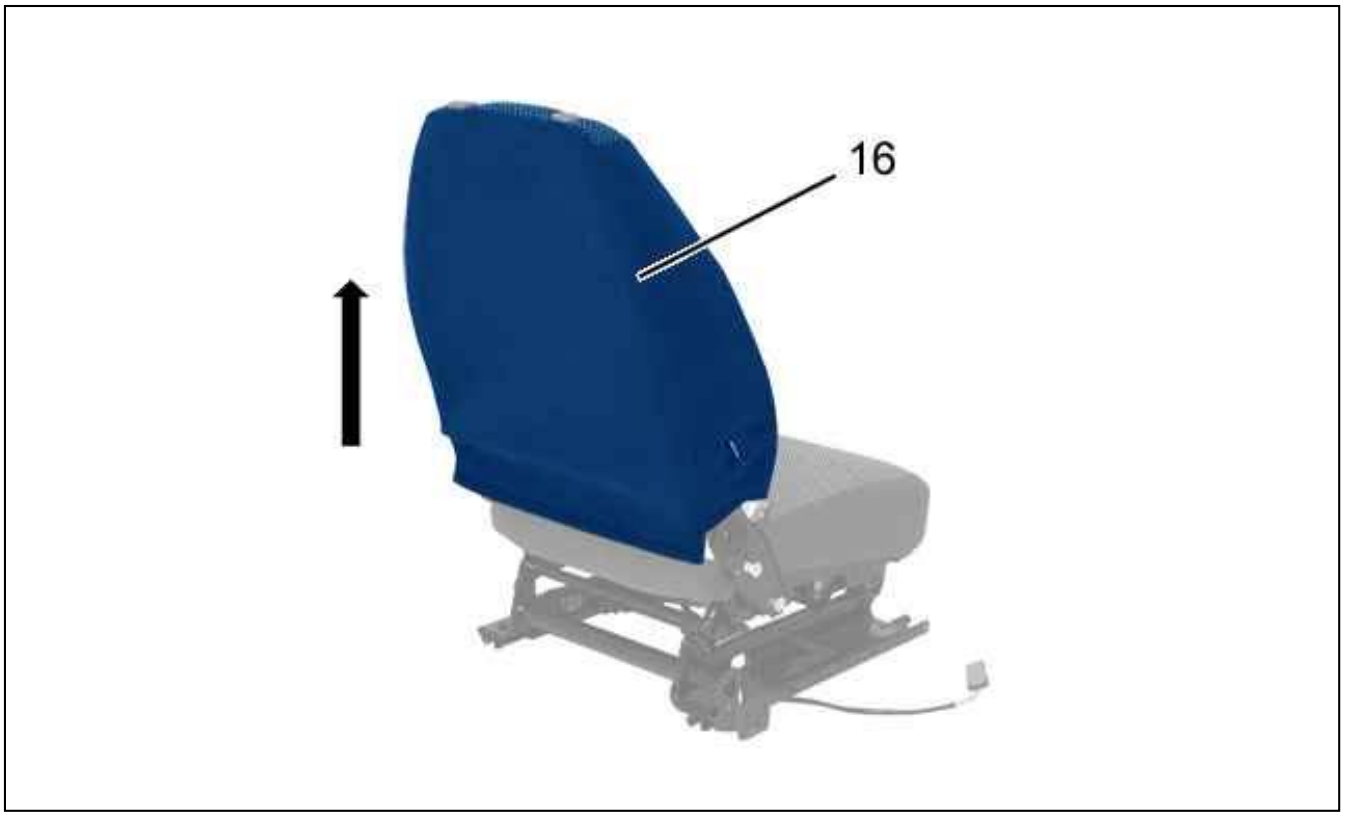

Figure : C5GM0BHD

Remove the backrest cover (16) (following the arrow).

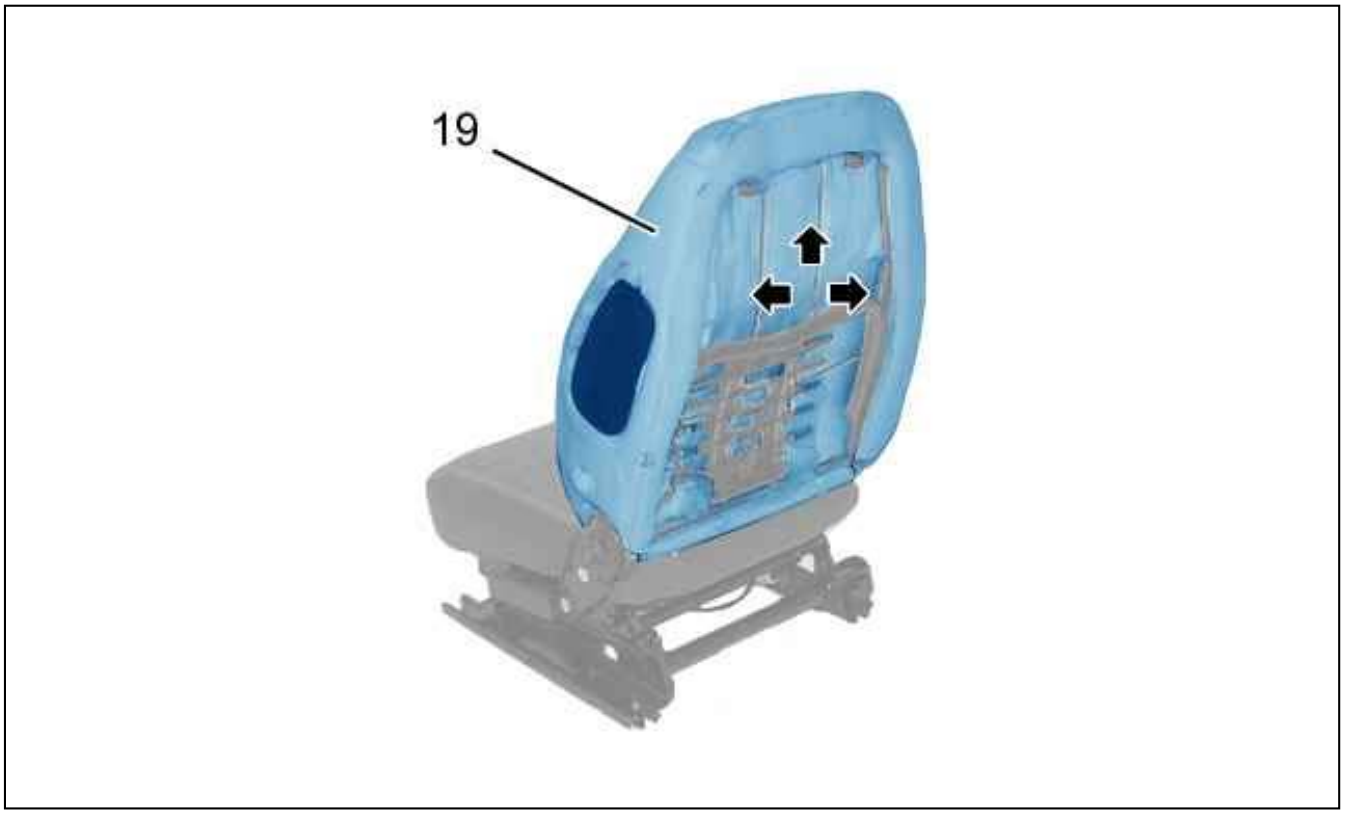

Figure : C5GM0BJD

Remove the insulating foam (19) (following the arrow).

Remove the side airbag .

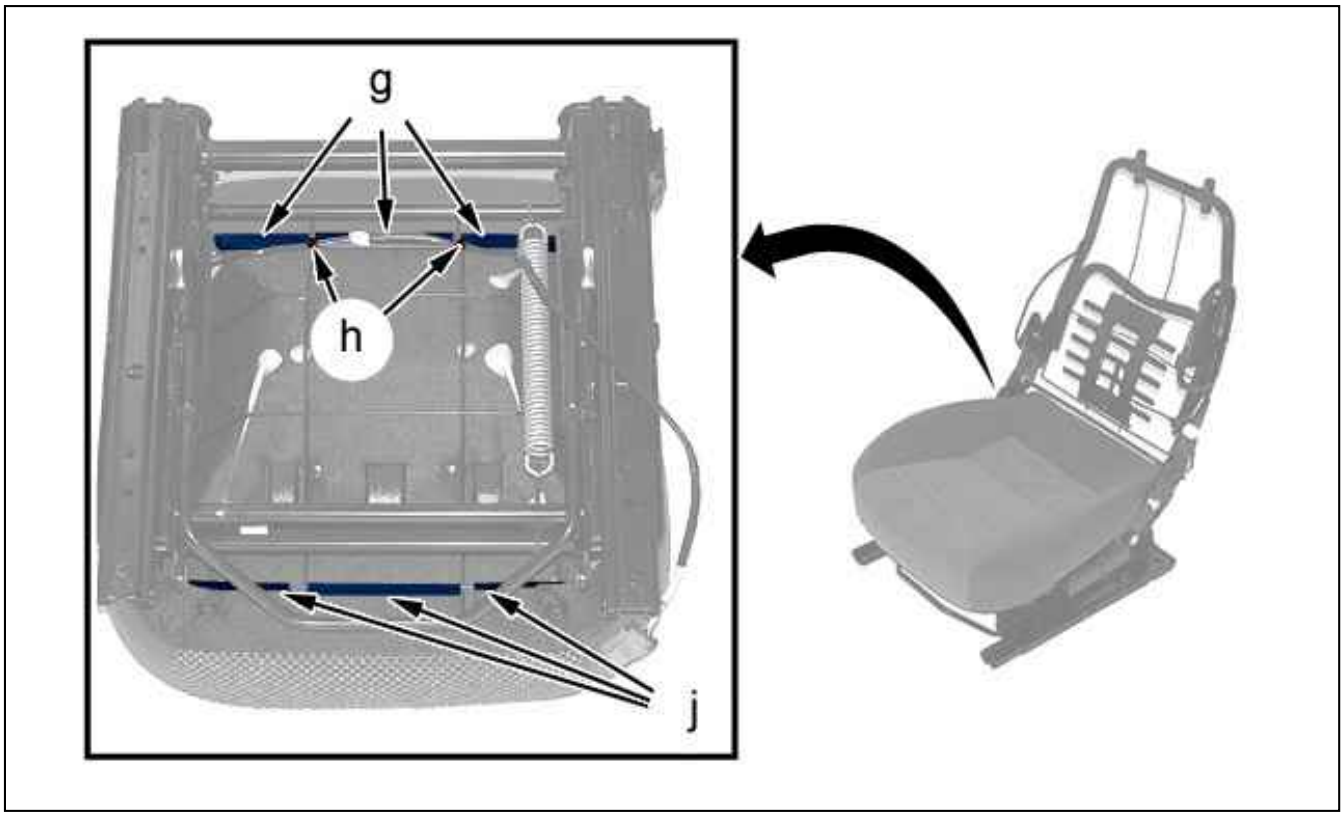

Figure : C5GM0BKD

Unclip the seat cushion (at "g", "j").
Cut away : The fastening ties (at "h").

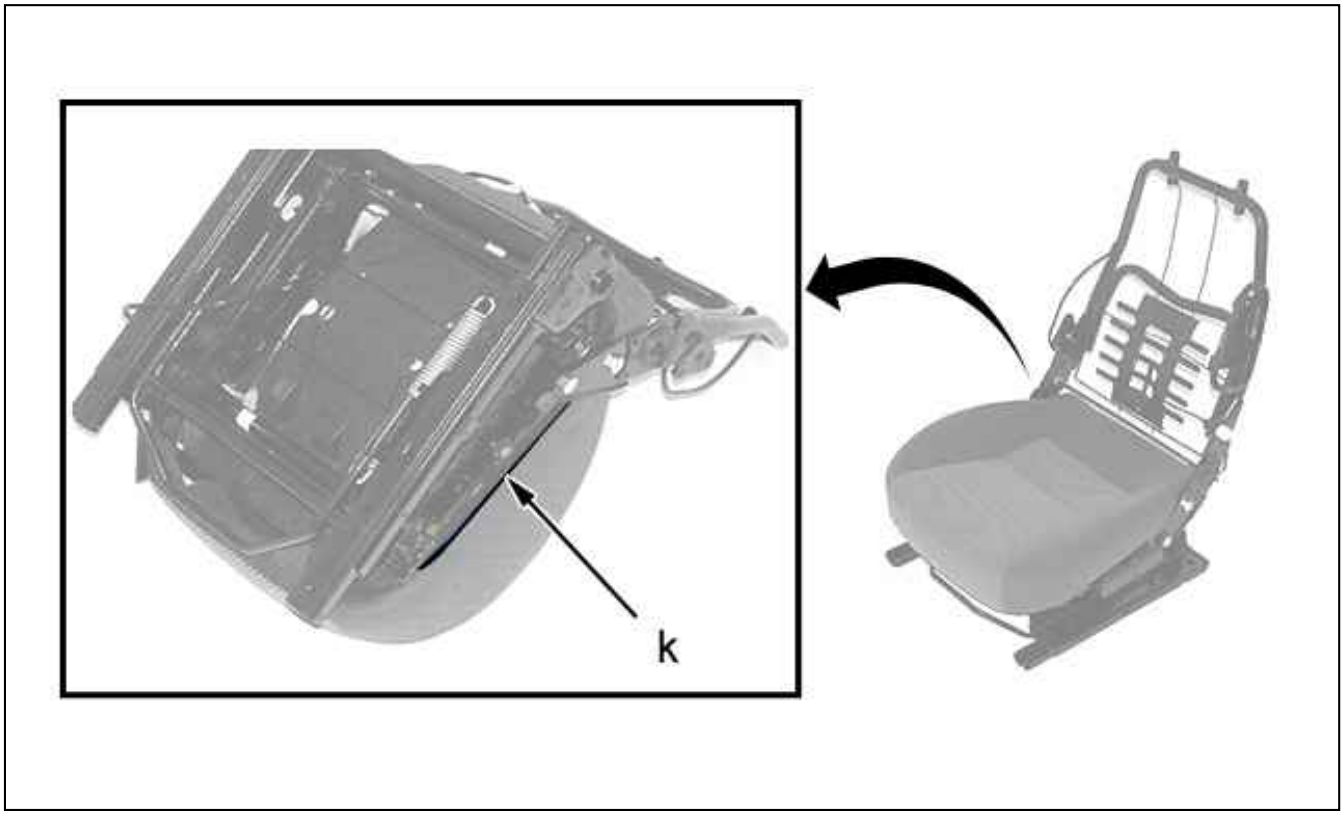

Figure : C5GM0BLD

Unclip the seat cushion (at "k").



Figure : C5GM0BMD

Unclip the seat cushion (20) (at "l").
Remove the seat cushion (20) (following the arrow).

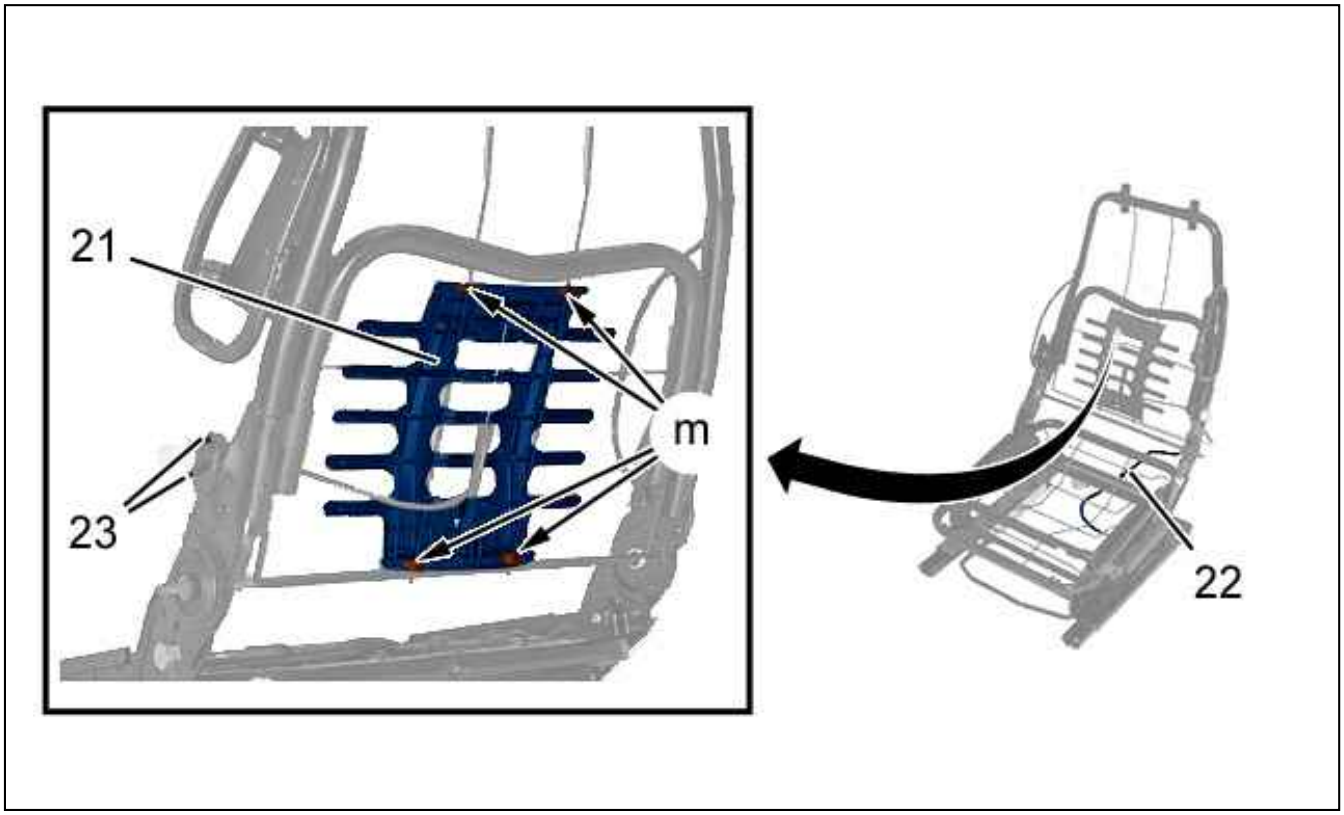

Figure : C5GM0BND

Remove :

- The harness (22)
- The bolts (23)

Unclip : The lumbar adjustment system (21) (at "m").
Remove : The lumbar adjustment system (21).

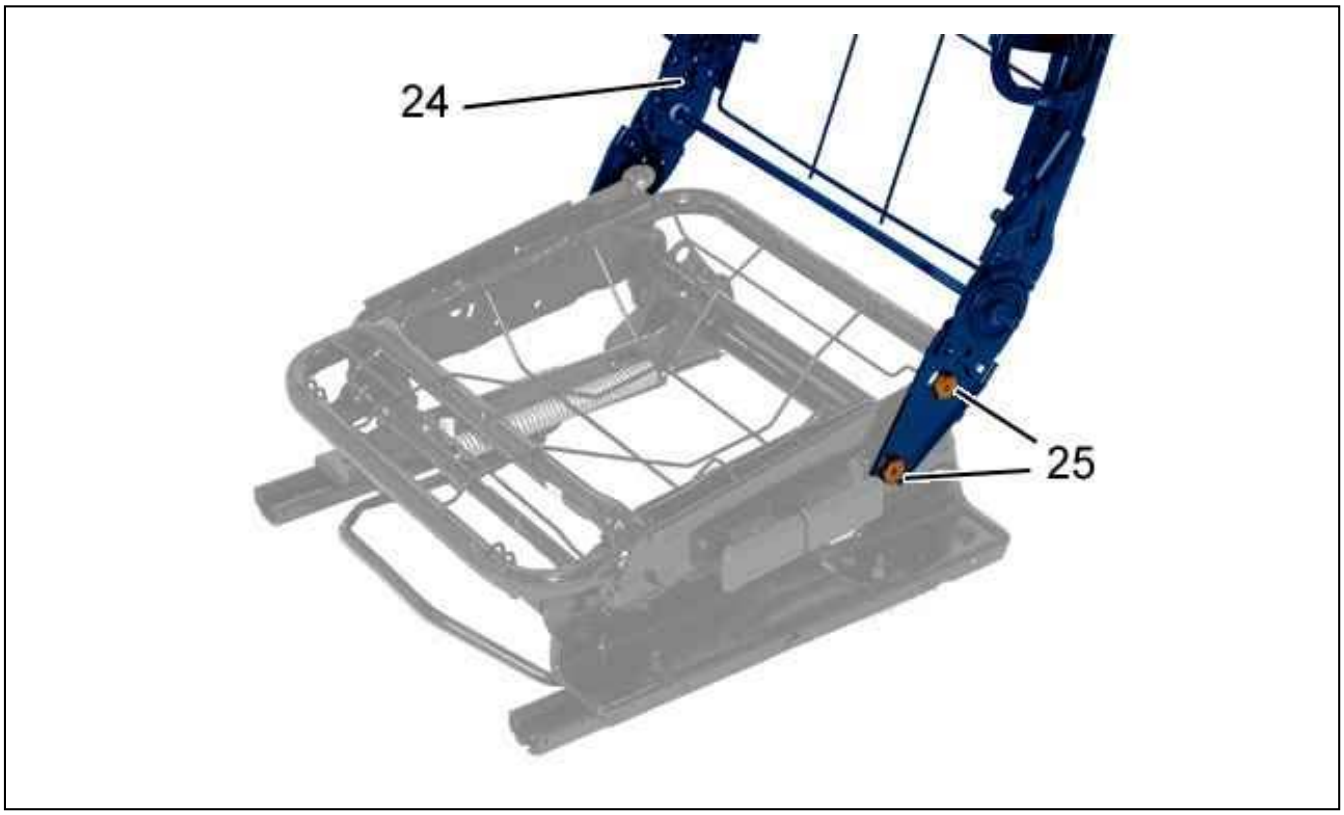

Figure : C5GM0BPD

Remove :

- The bolts (25) (Symmetrical operations)
- The backrest frame (24)

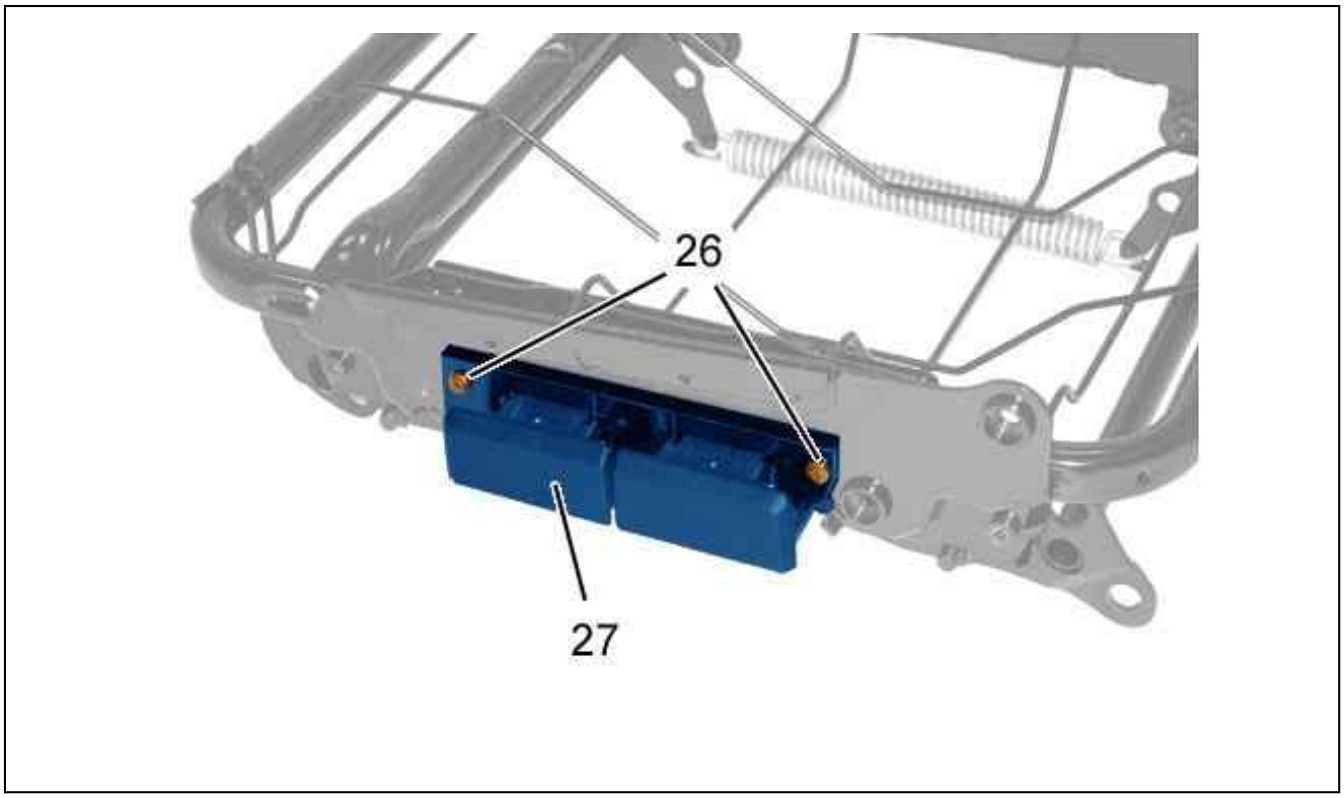

Figure : C5GM0BQD

Remove :

- The bolts (26)
- The controls (27)

2.2. support (Front seat)

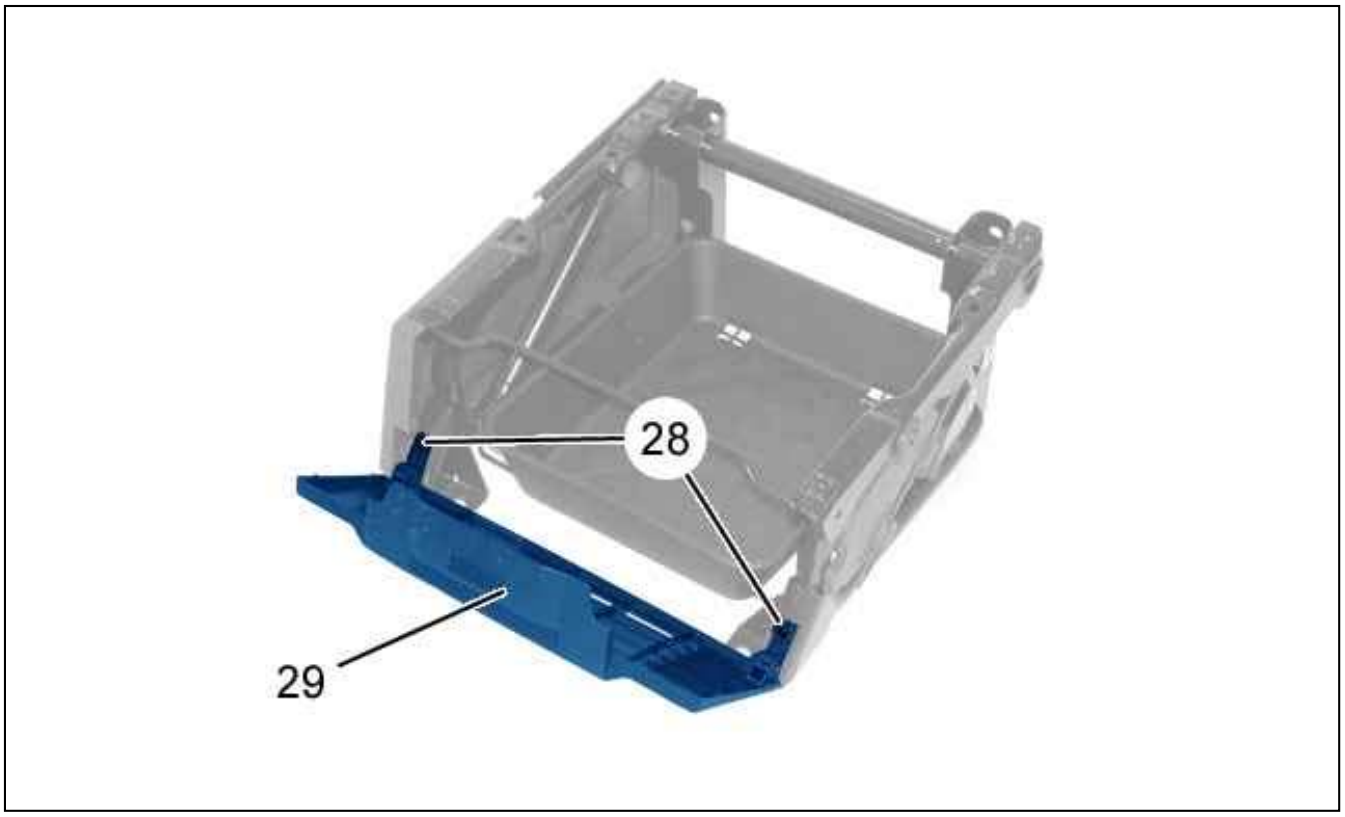

Figure : C5GM0BRD

Remove :

- The bolts (28)
- The trim (29) (front)

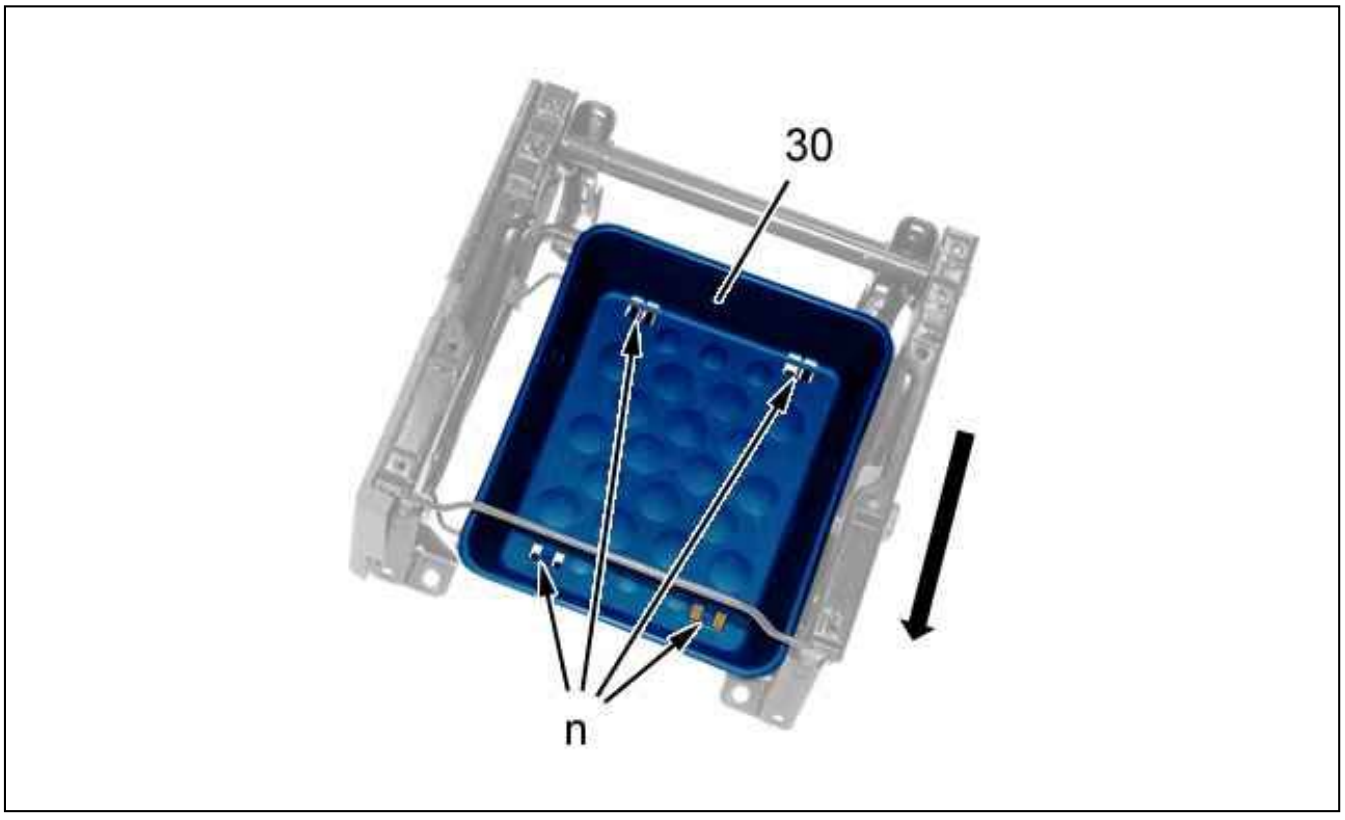

Figure : C5GM0BTD

Unclip : The tray (30) (at "n").
Remove : The tray (30) (following the arrow).

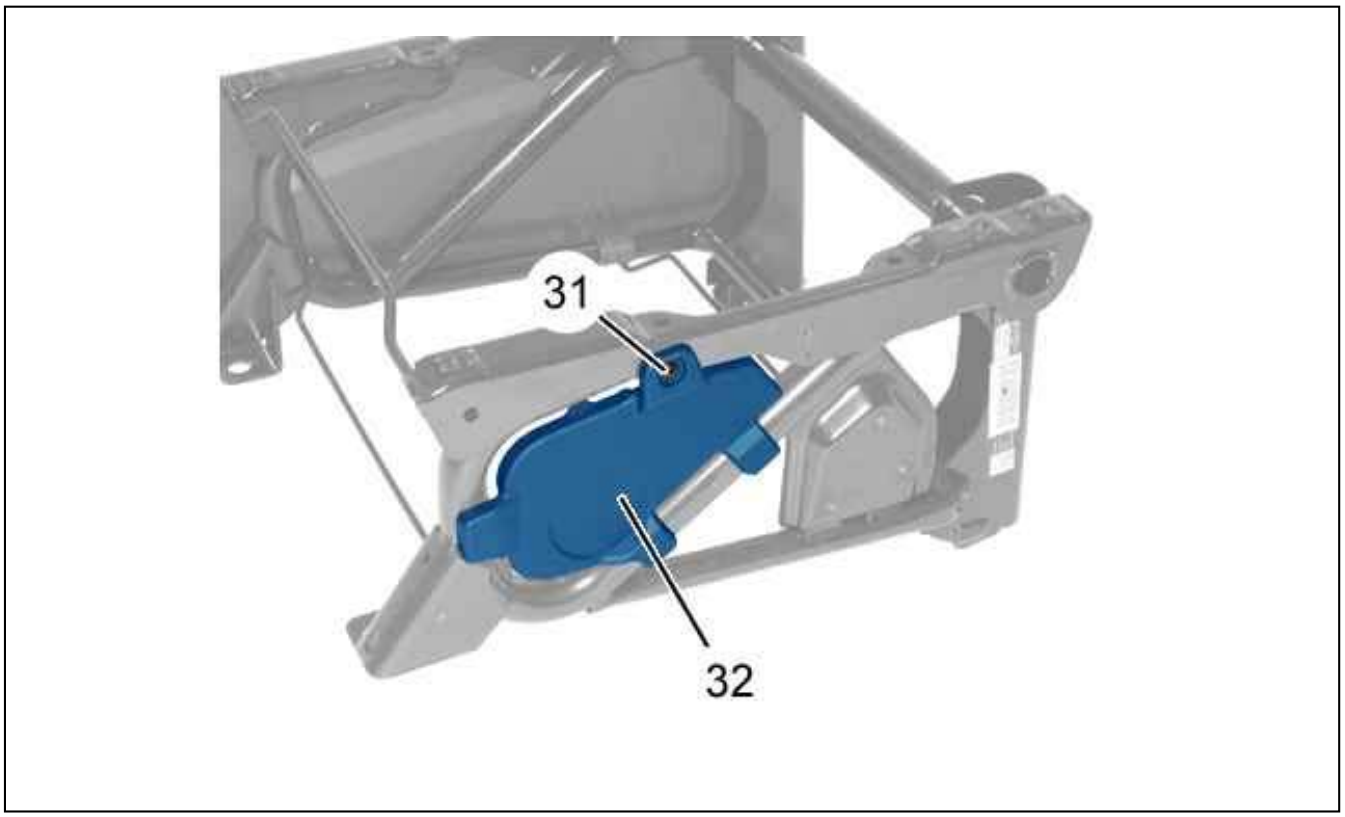

Figure : C5GM0BUD

Remove :

- The (31) bolt
- The bezel (32)

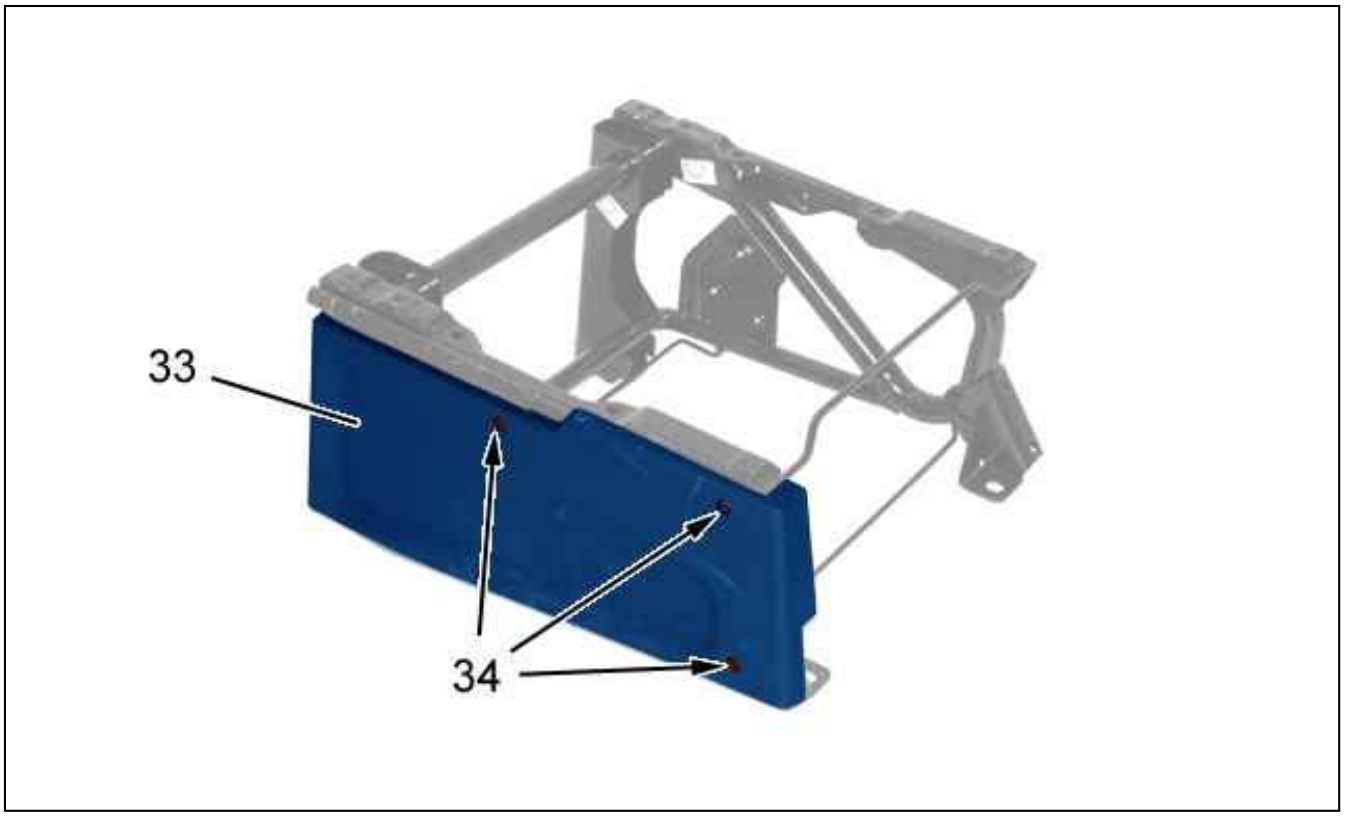

Figure : C5GM0BVD

Remove :

- The bolts (34)
- The side trim (33)

3. Re-assembling

ESSENTIAL : Coat the thread of the bolts (25) with thread lock.

CAUTION : Always replace : The fastening ties.

Proceed in the reverse order to removal.
Apply some threadlock on the bolt (13).
Tighten :

- The bolts (2) to 2 da.Nm
- The screw (13) to 4,2 m.daN
- The bolts (25) to 4,2 da.Nm

CAUTION : Perform the operations to be carried out following reconnection of the battery.

Reconnect the battery.
Check the electrical operation of the equipment.

REMOVING - REFITTING : REAR SEAT BELT (CREW CAB)

ESSENTIAL : Observe the safety and cleanliness requirements .

1. Removing

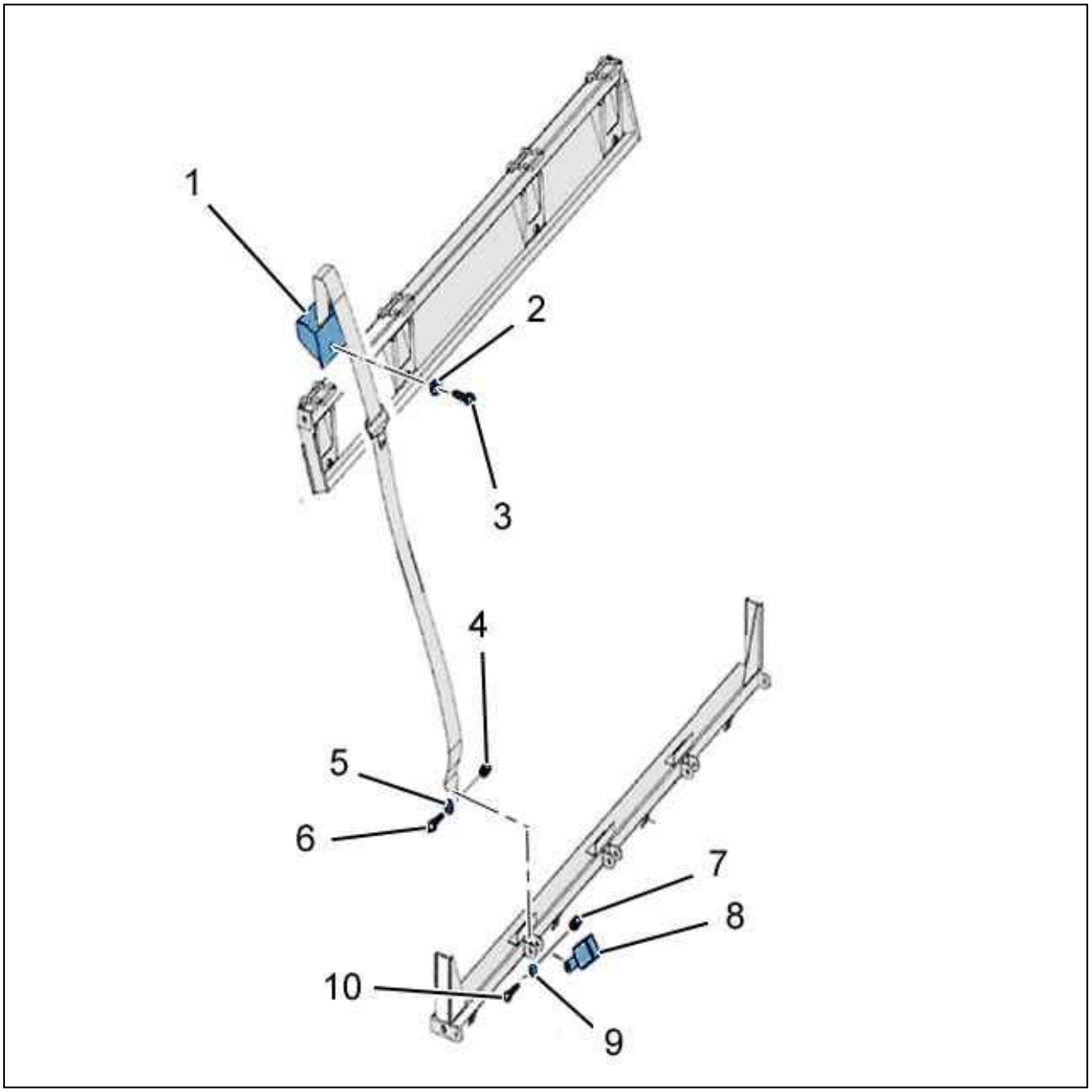

Figure : C5JM0JUP

Raise : The rear benchseat cushions .

Remove :

- The bolts (6), (10)

- The washers (5), (9)
- The nuts (4), (7)
- The seat belt stalk (8)
- The rear benchseat backrests
- The (3) bolt
- The washer (2)
- The inertia reel (1)

N.B. : Proceed in the same way for the other seat belts.

2. Refitting

Perform the rest of the operations in the reverse order to the removal operations.
Tightening torque :

- bolts (3) : 3 ± 0,3 daNm
- bolts (6), (10) : 7,5 ± 0,7 daNm

REMOVING - REFITTING : SEAT BELT (ROW 3)

ESSENTIAL : Observe the safety and cleanliness recommendations.

1. Recommended tools

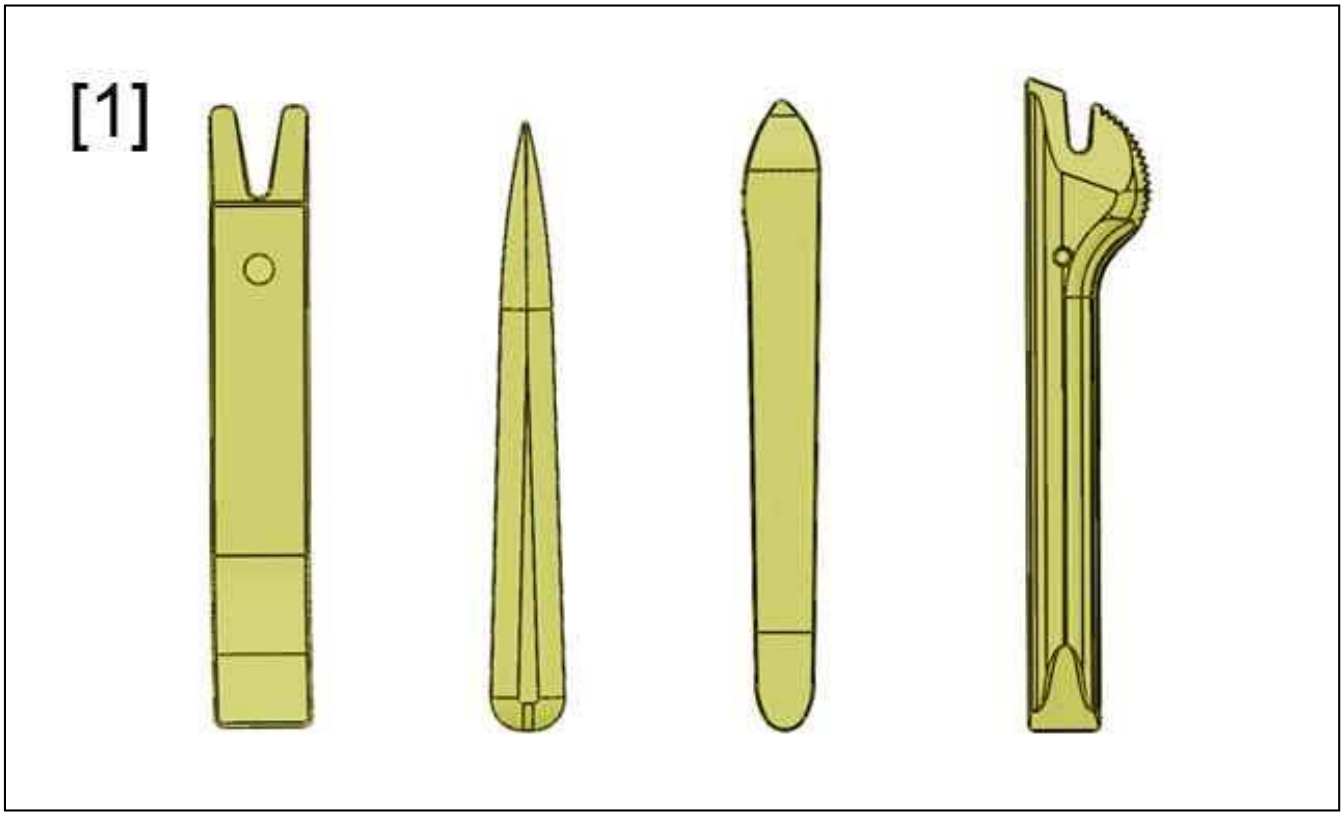

Figure : E5AP30WD

[1] Stripping tools (-).1350-ZZ.

2. Removing

Perform the following operations :

- Switch off the ignition
- Wait 3 minutes before disconnecting the battery
- Disconnect the battery

Remove the rear panel lower trim .

2.1. Seat belt (Row 3)

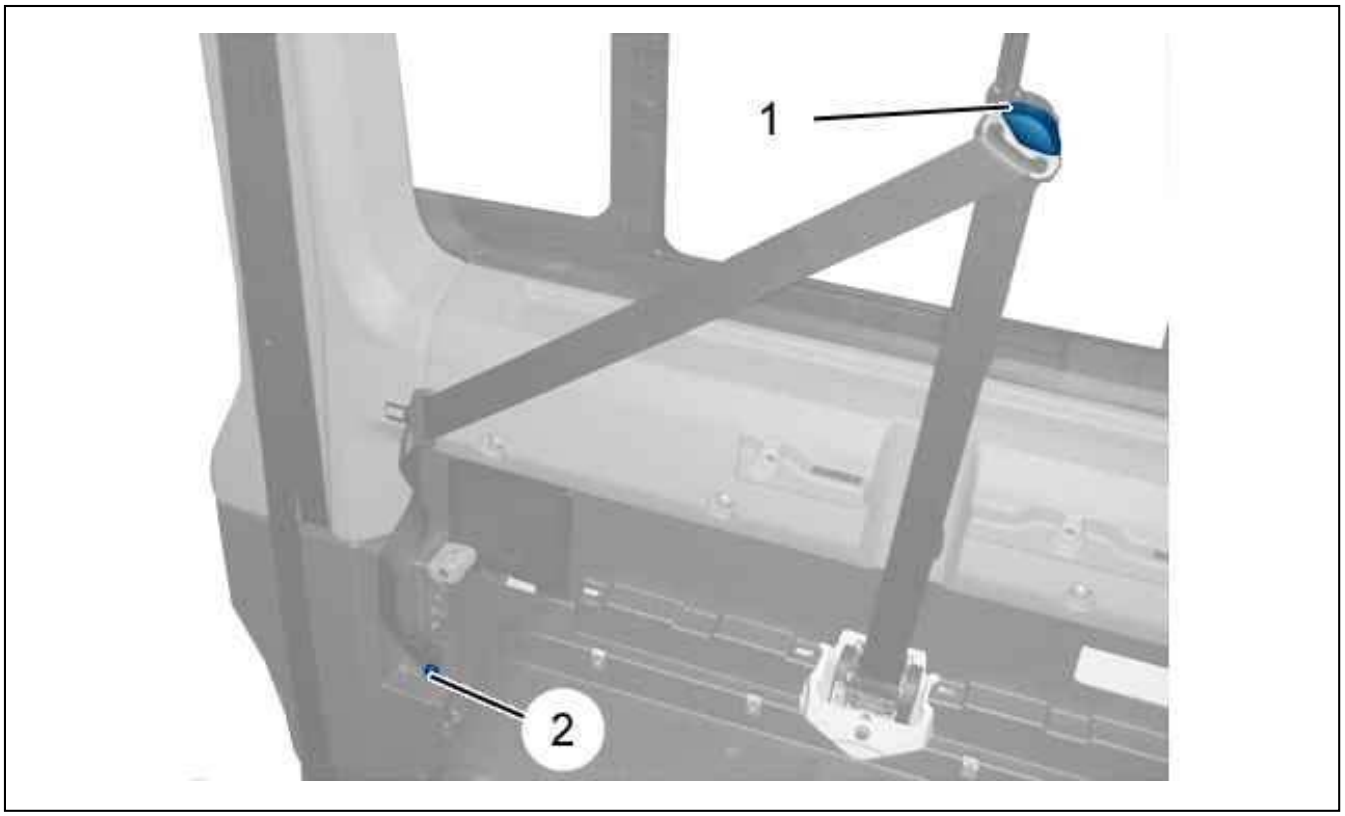

Figure : C5JM04FD

Remove : The covers (1), (2).

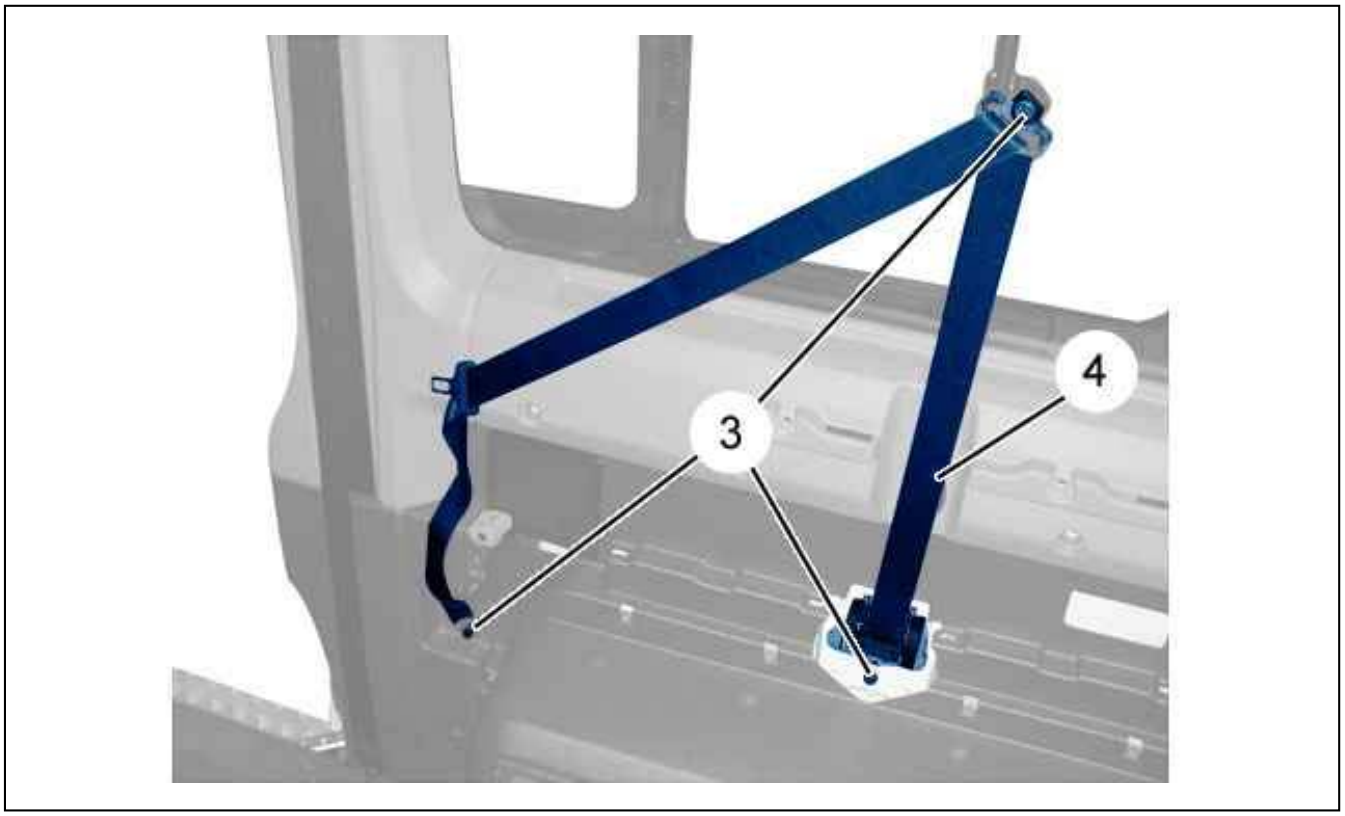

Figure : C5JM04GD

Remove :

- The bolts (3)

- The seat belt (4)

2.2. Seat belt support (Row 3)

Glovebox .

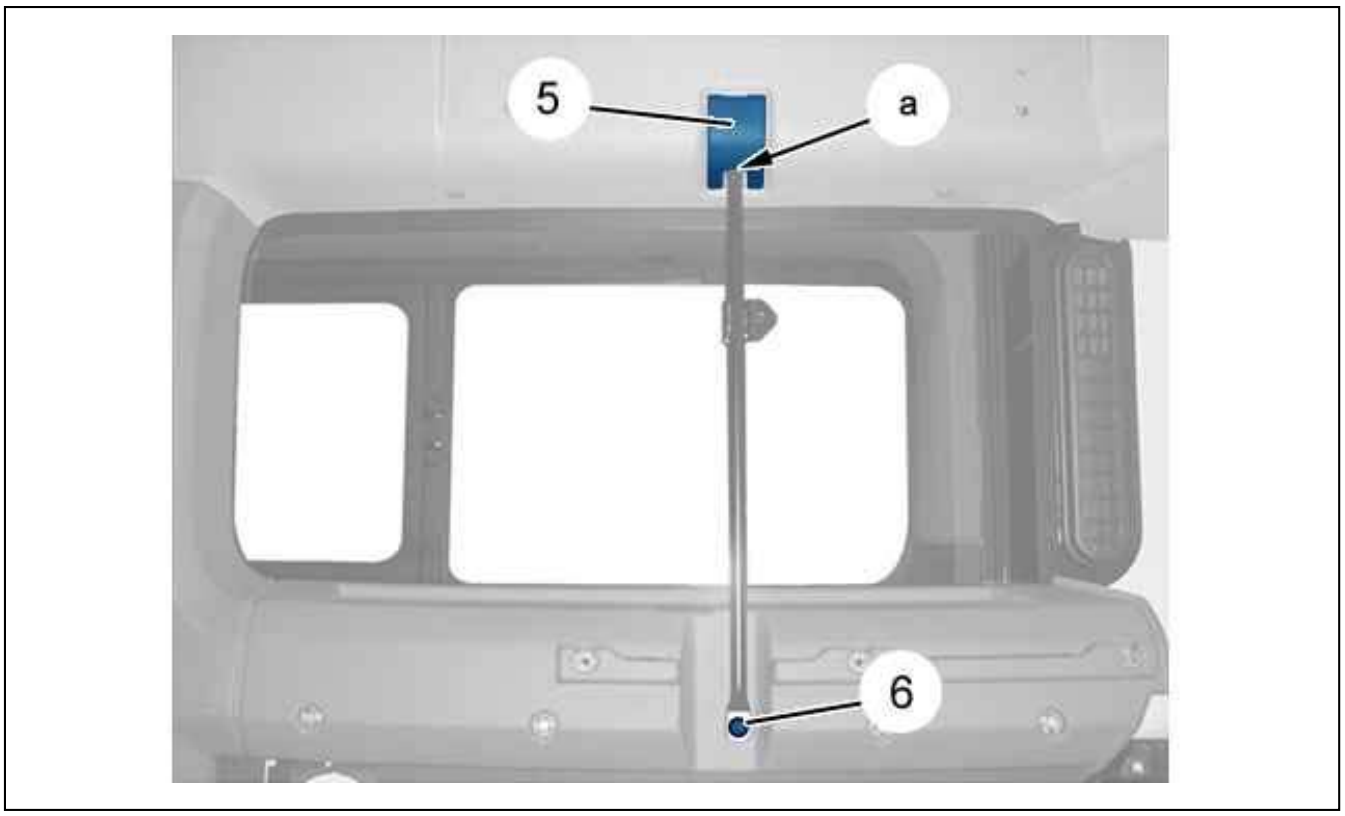

Figure : C5JM04HD

Open trim cover (5) (at "a").
Remove the cover (6).

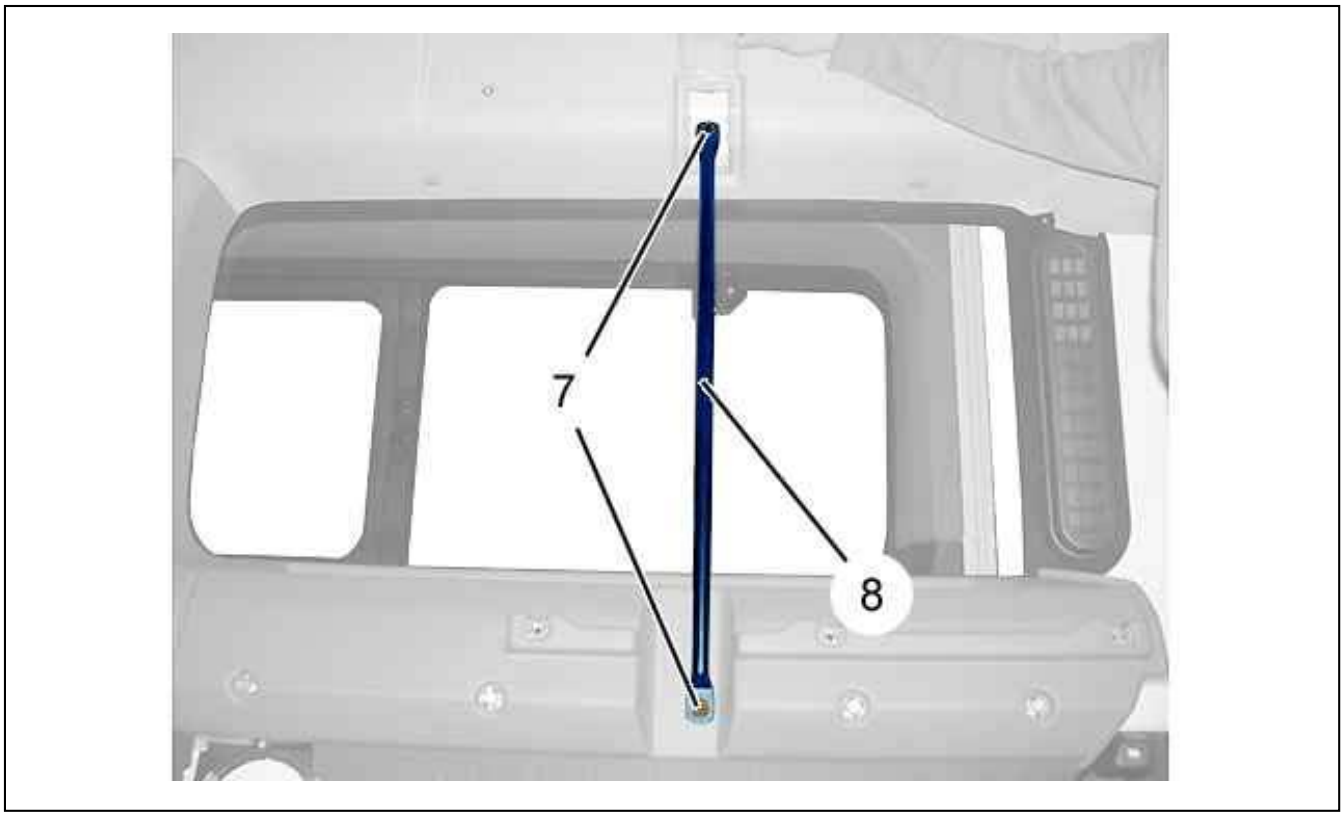

Figure : C5JM04JD

Remove :

- The bolts (7)
- The seat belt support (8)

3. Refitting

Proceed in the reverse order to removal.
Tighten the bolts (3), (7) to 4 ± 0,1 daN.m.
Reconnect the battery.
Check the electrical operation of the equipment.

REMOVING - REFITTING : SEAT BELT (ROW 2)

ESSENTIAL : Observe the safety and cleanliness recommendations.

1. Recommended tools

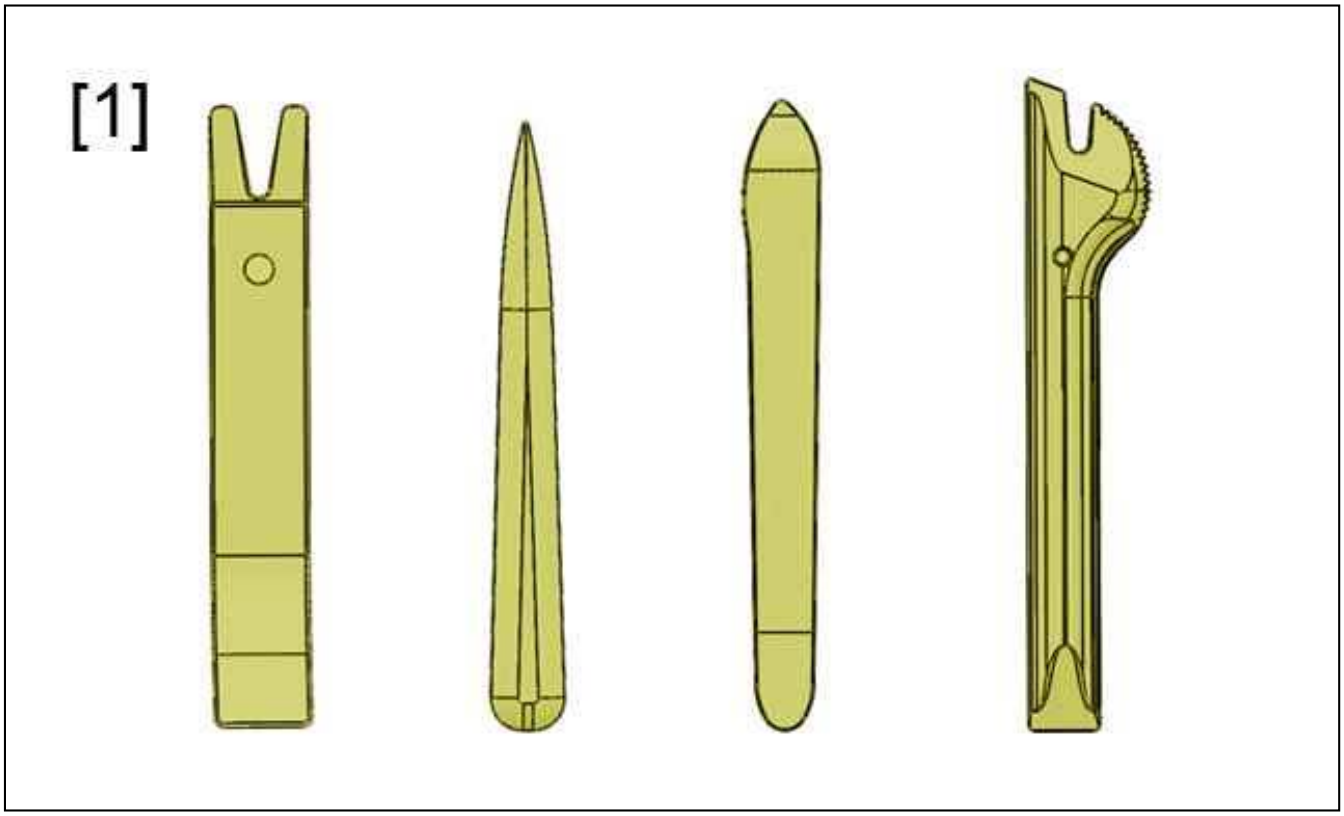

Figure : E5AP30WD

[1] Stripping tools (-).1350-ZZ.

2. Removing

Perform the following operations :

- Switch off the ignition
- Wait 3 minutes before disconnecting the battery
- Disconnect the battery

Remove :

- The upper trim of the rear panel
- The sliding door sill trim

2.1. Seat belt (Row 2) (On the right-hand side)

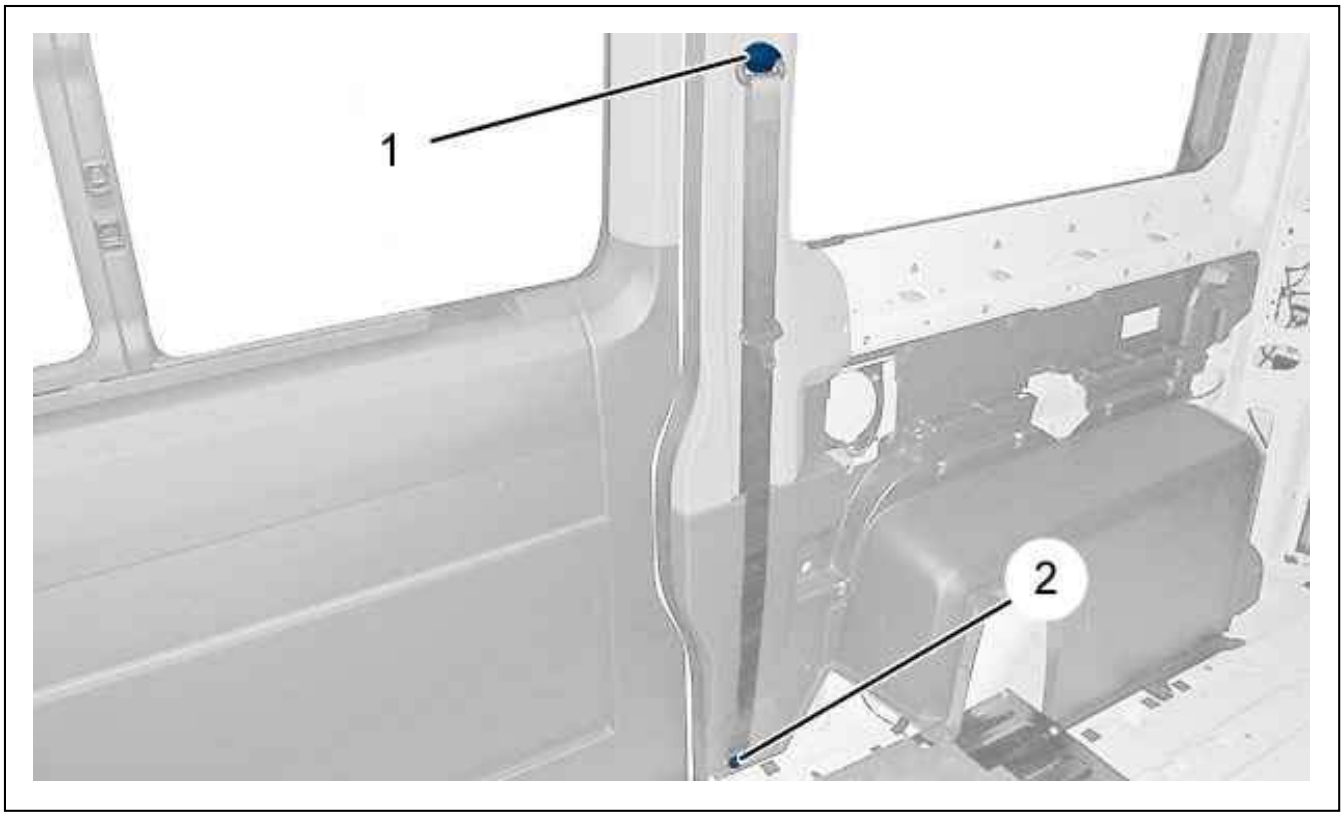

Figure : C4CM0UBD

Remove : The covers (1), (2) ; Using tool [1].

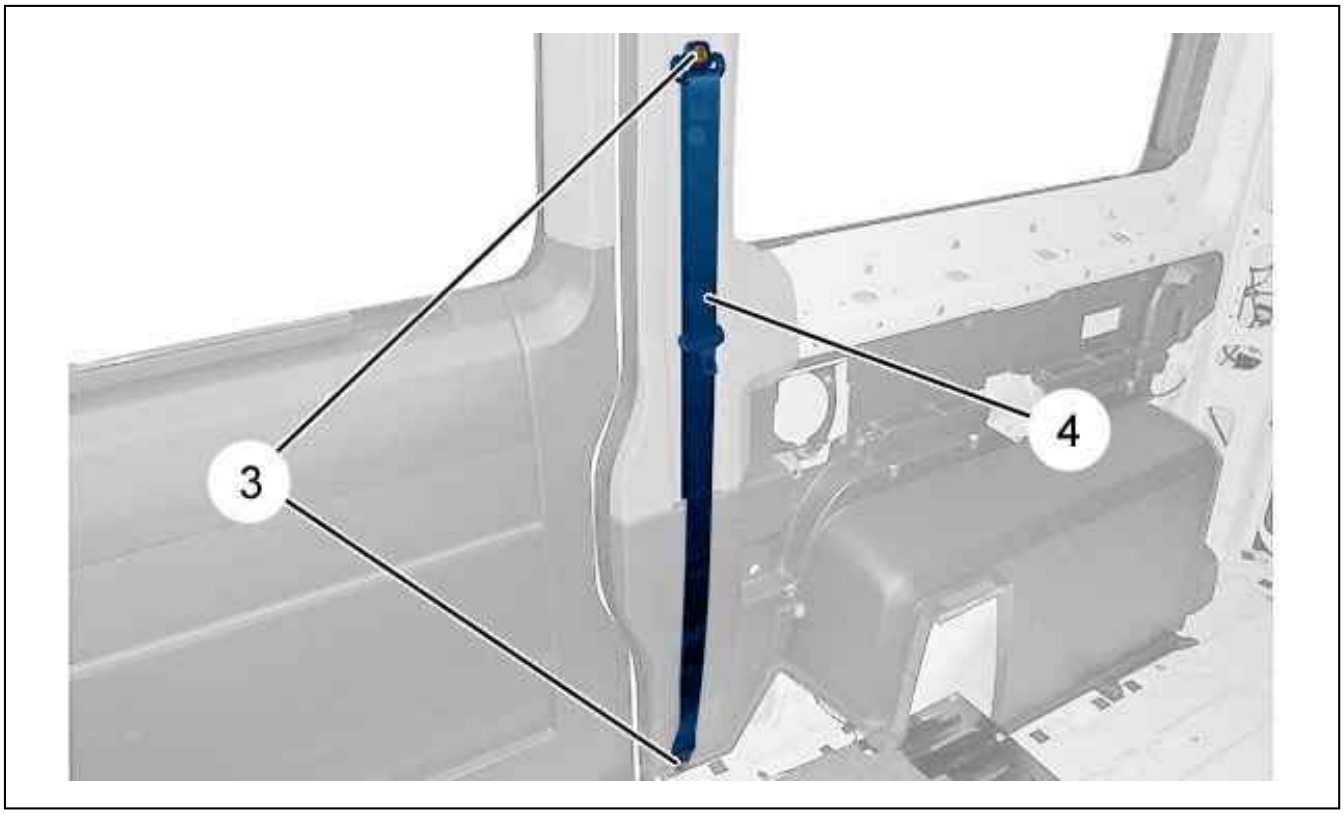

Figure : C4CM0UCD

Remove the bolts (3).
Detach : The seat belt (4).

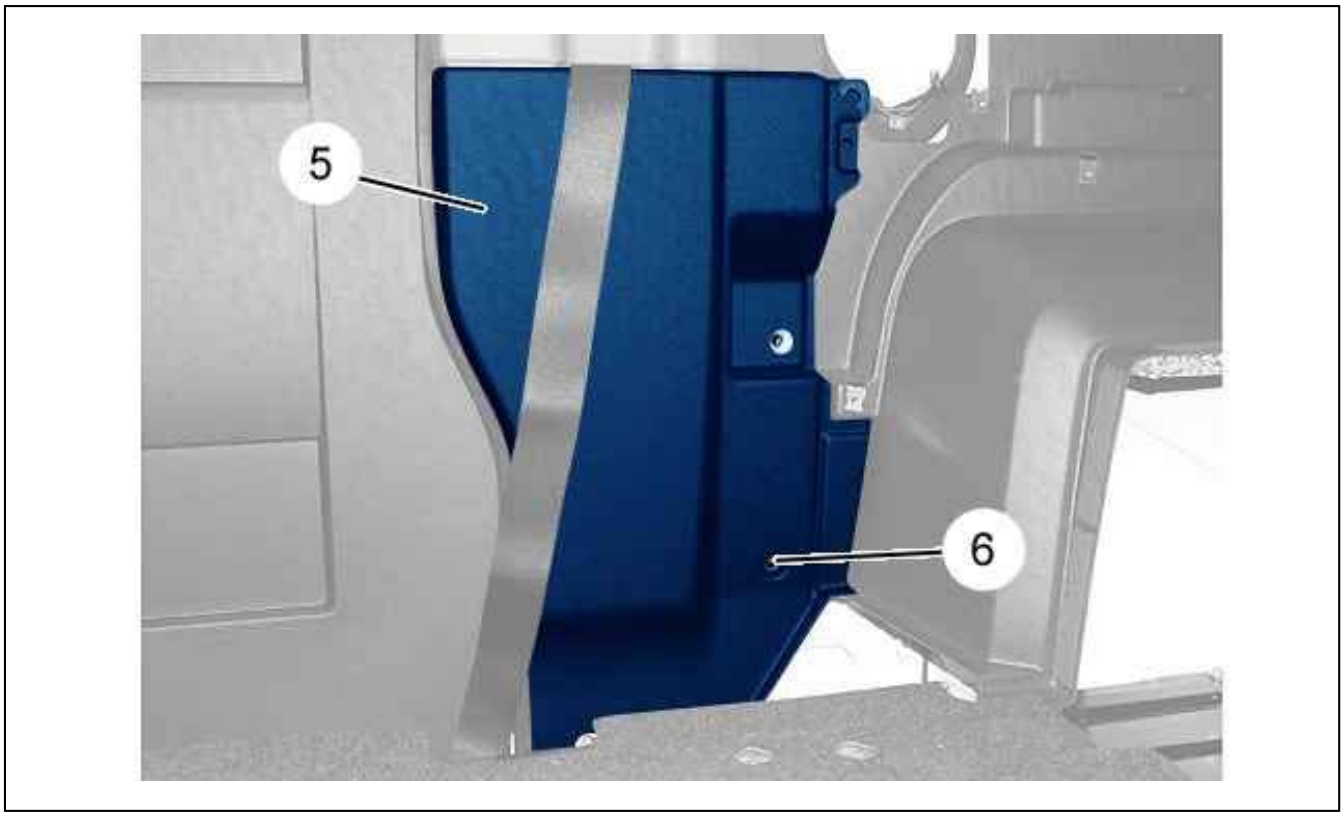

Figure : C4CM0UDD

Remove :

- The (6) bolt
- The centre pillar lower trim (5)

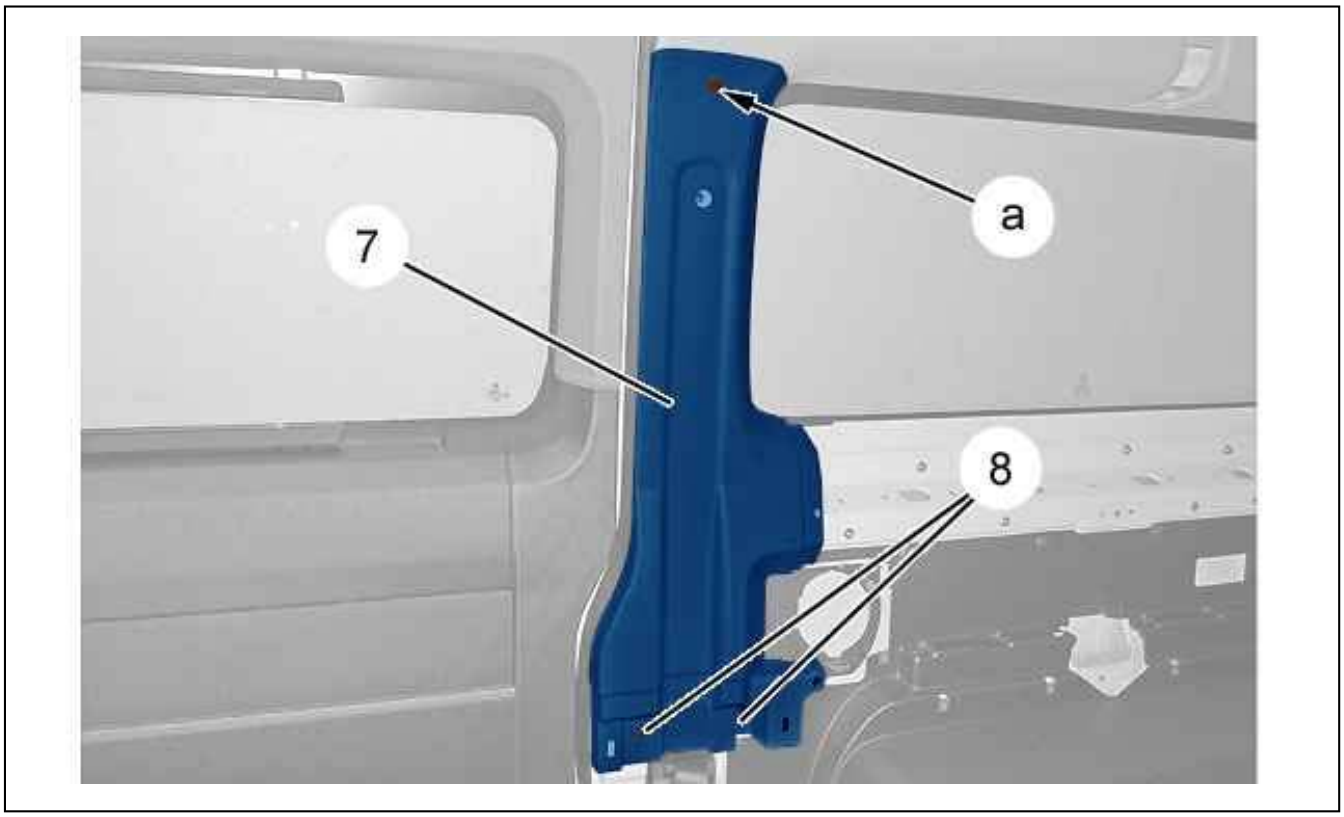

Figure : C5GM0BWD

Detach the centre pillar upper trim (7) (at "a").
Remove :

- The bolts (8)
- The door pillar upper trim (7)

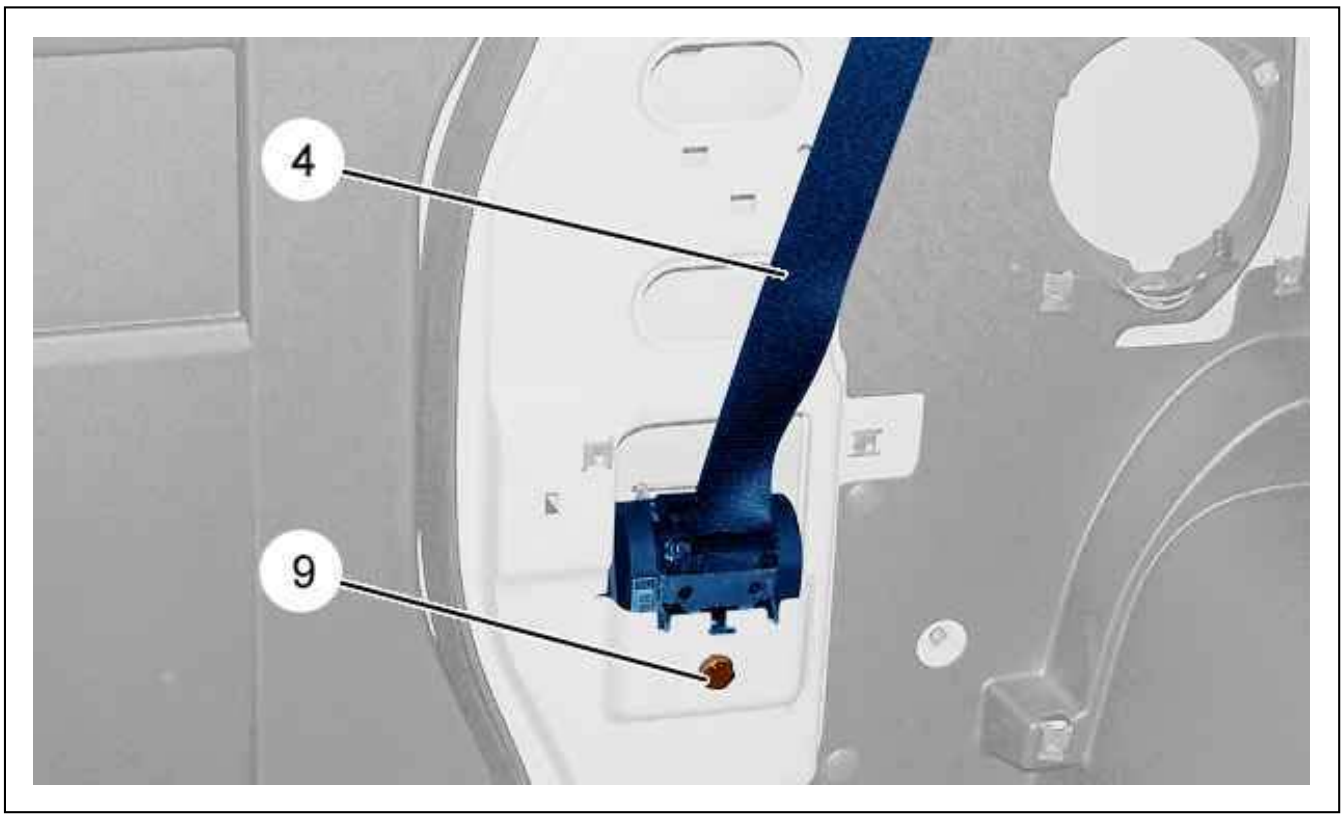

Figure : C5JM04KD

Remove :

- The (9) bolt
- The seat belt (4)

2.2. Seat belt (Row 2) (On the left-hand side)

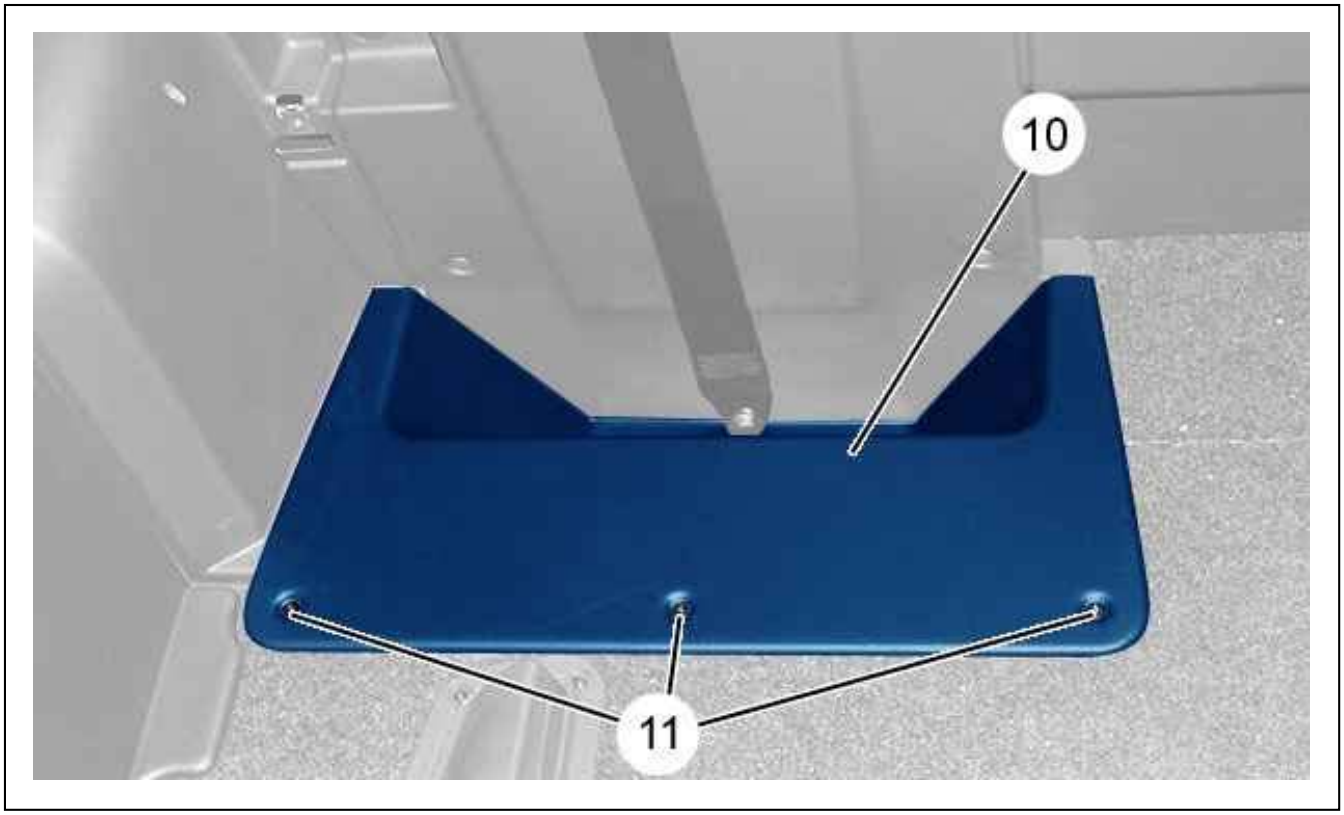

Figure : C5GM0BXD

Remove :

- The bolts (11)
- The trim (10)

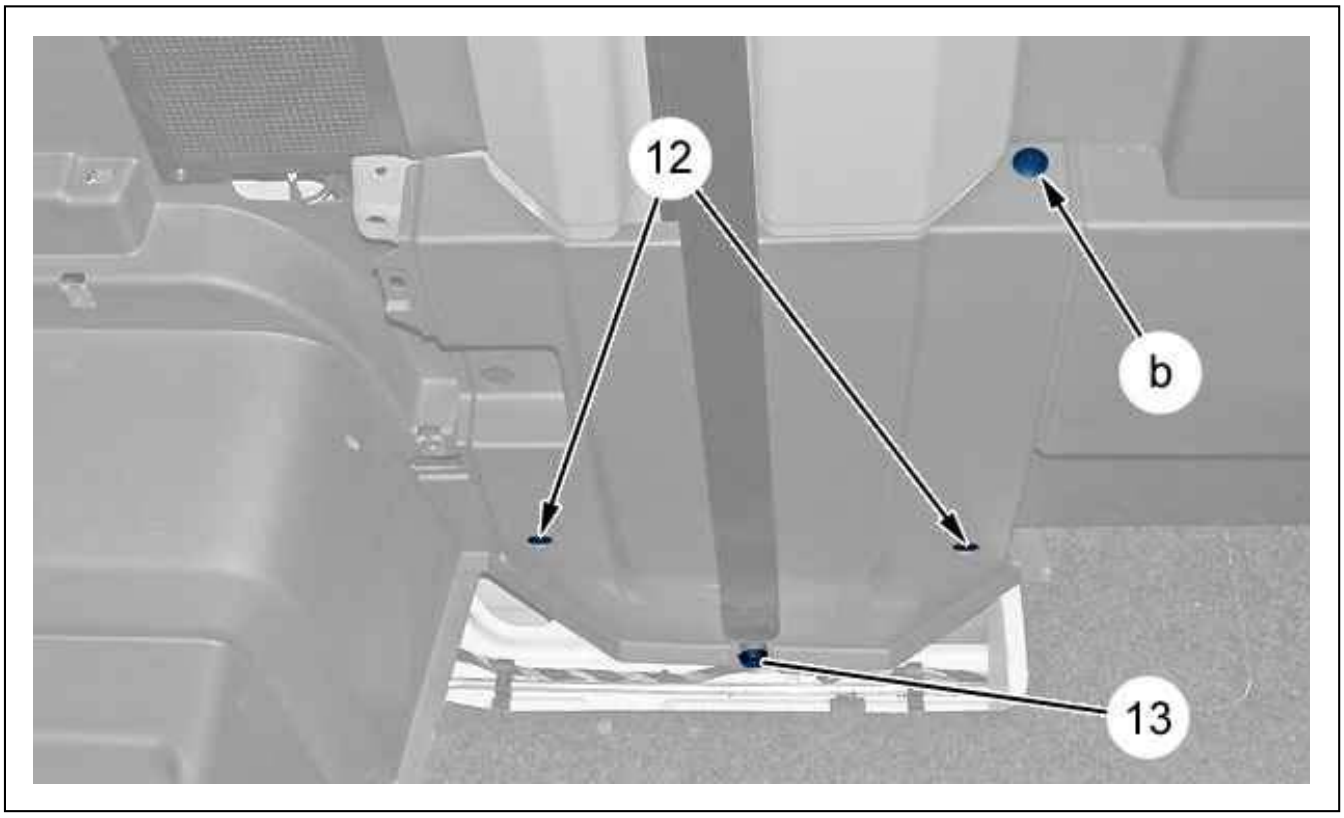

Figure : C5GM0BYD

Unclip (at "b").

Remove :

- The bolts (12)
- The cover (13)

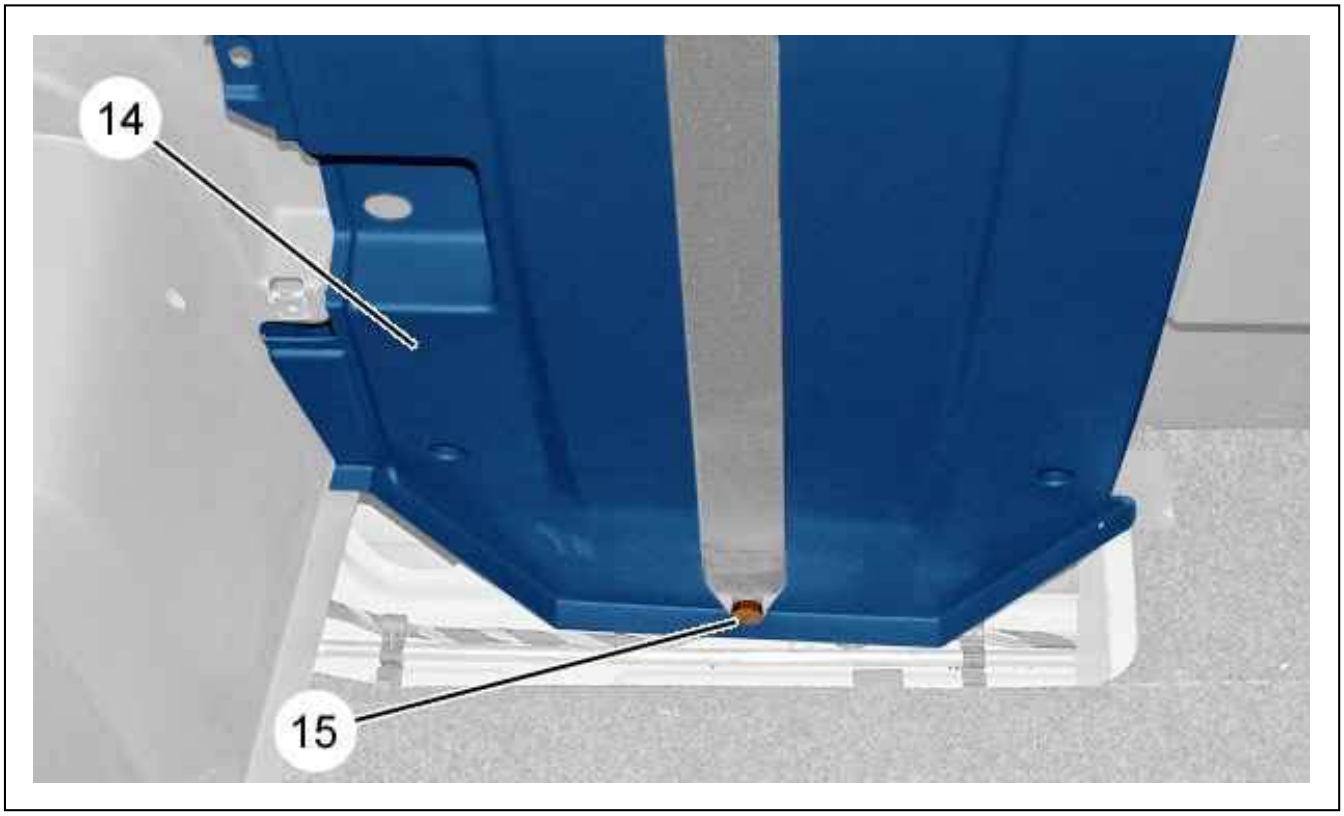

Figure : C5GM0BZD

Remove :

- The (15) bolt
- The centre pillar lower trim (14)

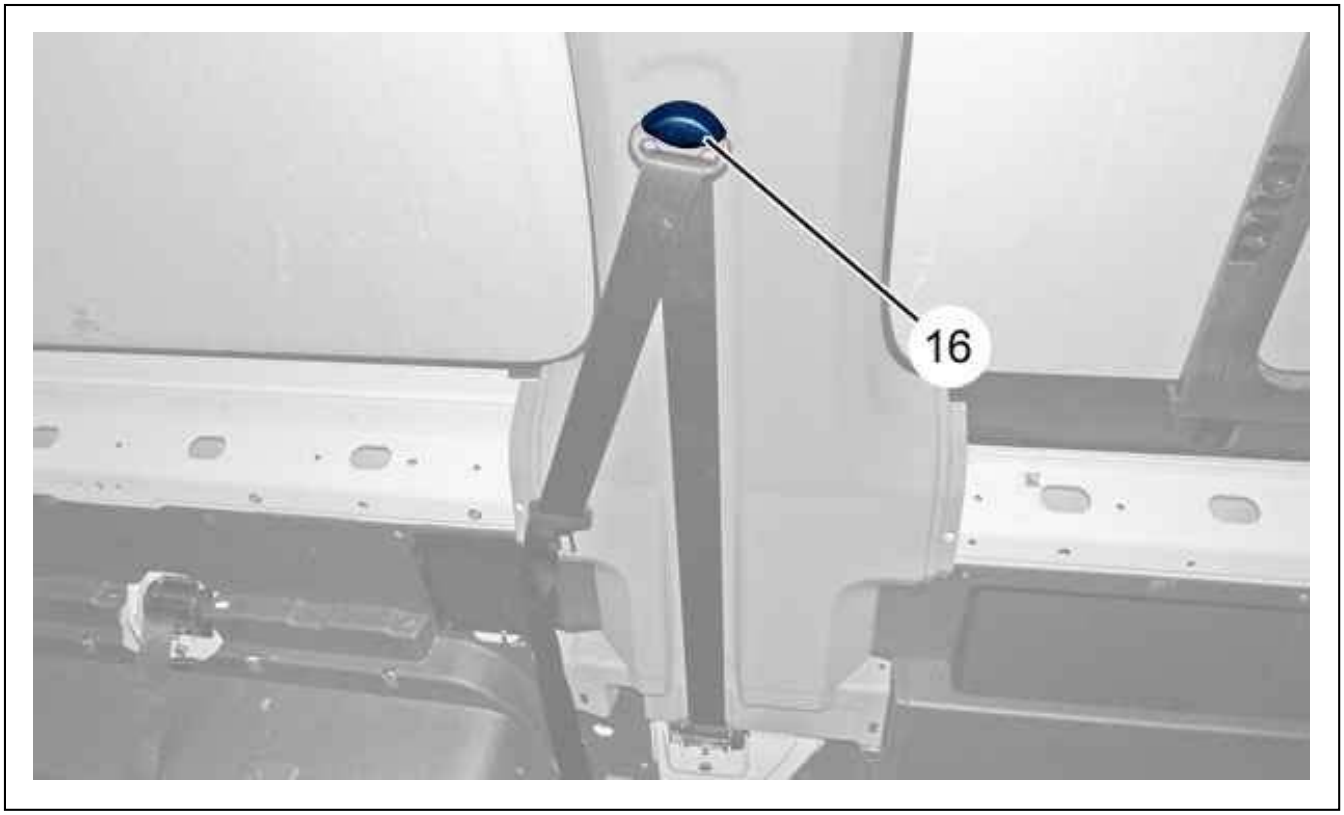

Figure : C4CM0UED

Remove the cover (16).

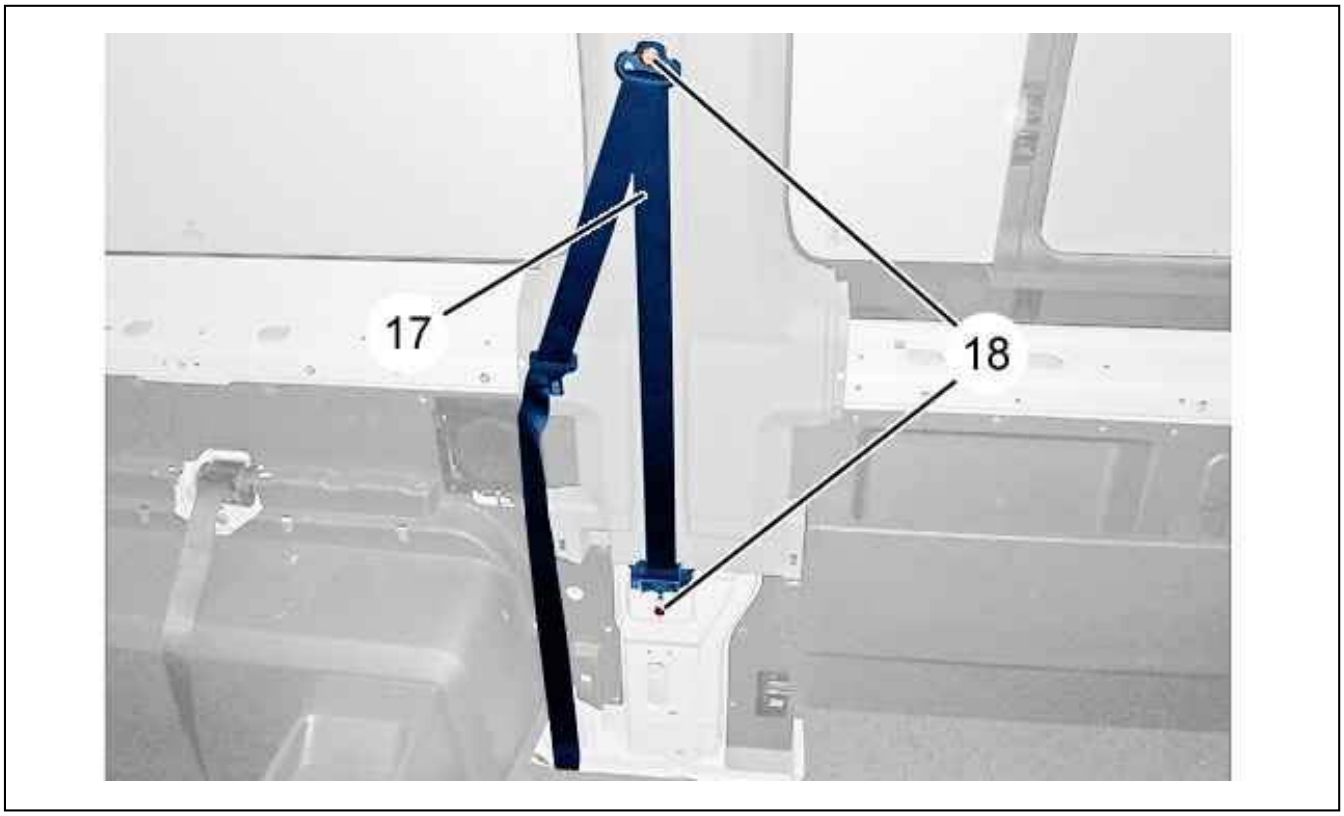

Figure : C4CM0UFD

Remove the bolts (18).
Detach : The seat belt (17).

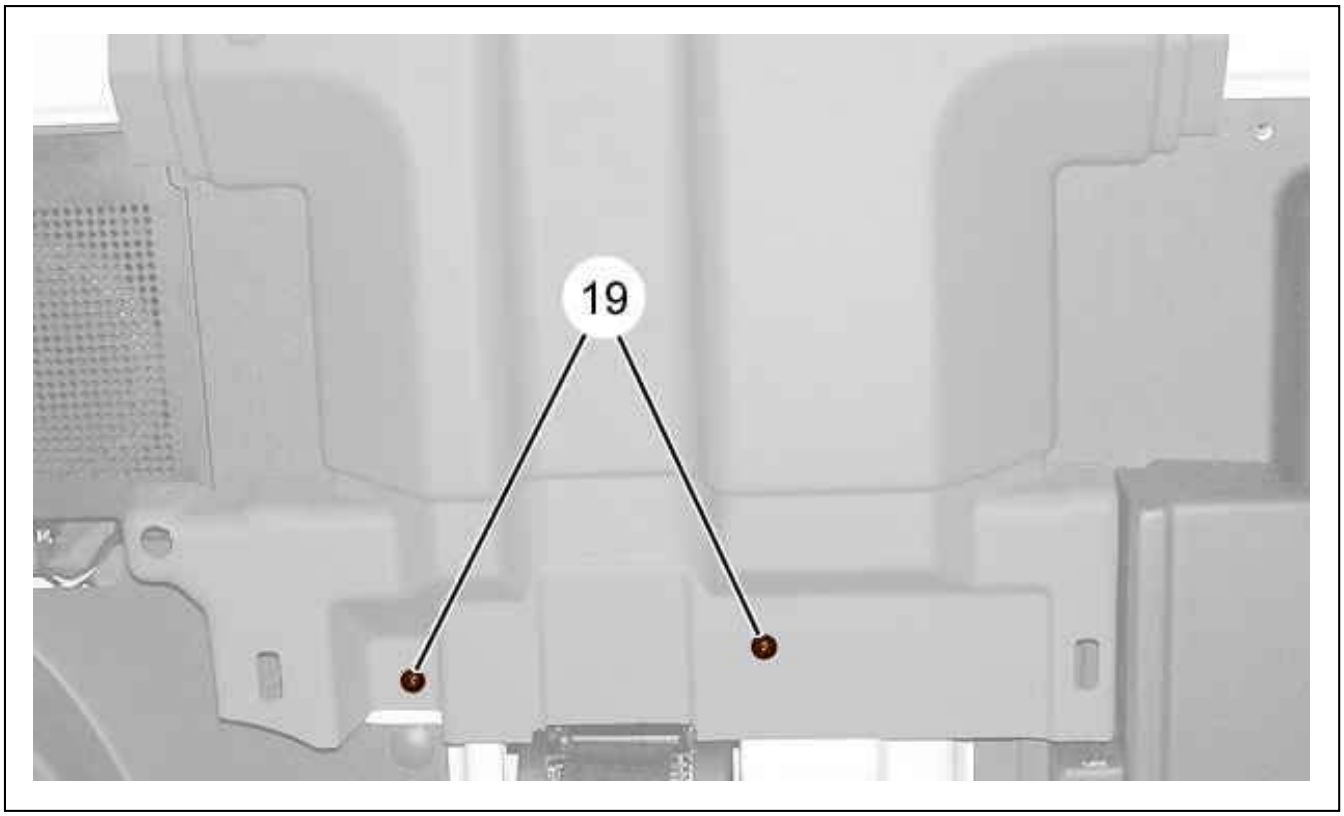

Figure : C5GM0C0D

Remove the bolts (19).

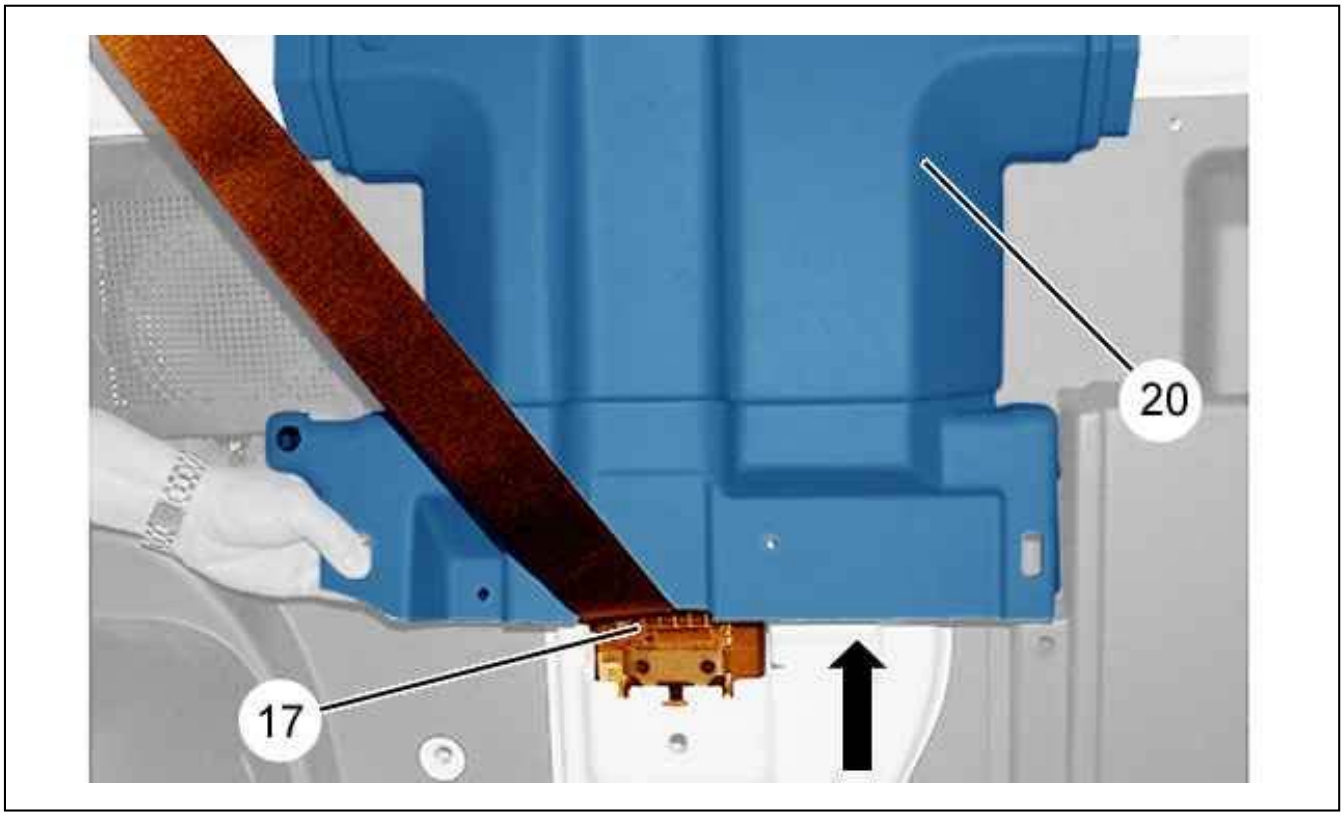

Figure : C5GM0C1D

Release : The door pillar upper trim (20).
Remove the seat belt (17) (following the arrow).

3. Refitting

Proceed in the reverse order to removal.
Tighten the bolts (3), (9), (15), (18) to 4 ± 0,1 daN.m.
Reconnect the battery.
Check the electrical operation of the equipment.

REPLACE : PRE-TENSIONING PARTS (FOLLOWING TRIGGERING OF THE AIR BAGS AND SEAT BELTS) - INSTRUCTION FOR REPLACEMENT OF FAULTY PARTS AND REPAIRABILITY OF THE HARNESS

Replace (In the event of impacts and following each triggering) :

- Gas generator connectors (If damaged)
- Control unit
- The elements listed below

1. Parts required

Regardless of the activation of the pyrotechnic equipment (impact or accidental triggering), the triggering unit of this equipment (or air bag ECU) must be changed.

ESSENTIAL : The special gas generator connectors must be replaced if they are damaged.

1.1. Triggering with impact

Pyrotechnic devices activated	Compulsory replacements	Optional replacements
Driver’s airbag	Air bag module - Steering wheel - Rotary connector or COM 2000	Steering column
Passenger air bag under facing or withcapping	Air bag module - Dashboard (Application : FEM 103)	Impact side : Door seal ; Shunts ; Various parts which may have been damaged during the deployment. Seat belt adjustment
Curtain air bag	Headlining - Impact side : Satellite ; Air bag module ; Fittings (Screen pillar - Centre pillar upper trim - Rear quarter panel trim - Grab handles - Sun visor) Pre-tensioning or non-pre-tensioning stalk strap	Impact side : Door seal ; Shunts ; Various parts which may have been damaged during the deployment. Seat belt adjustment
Front chest side air bag (Visible or under cover)	Impact side : Satellite ; Complete seat (including buckle strap and slide sensors) Pre-tensioning or non-pre-tensioning stalk strap	Impact side : Seat belt adjustment Inertia reel seat belt
Rear chest side air bag in door trim pad under cover (Triggering combined with front chest)	Impact side : Satellite ; Air bag module ; Door panel ; Door	Impact side : Glass ; (/) seal ; Window lift motor ; Door harness and other damaged accessories
driver’s knee airbag (Triggering combined with driver and passenger air bag)	Air bag module ; Dashboard	Steering column and cowling ; Lower components of the fascia
Active Anti-Submarining (ASA)	Air bag module	Frame and trims if damaged ; If necessary surrounding parts (mat, connector, housing, etc.)
Pre-tensioning buckle (Simultaneous driver and passenger operation)	Pre-tensioning buckle strap (If seat belt worn : Stalk strap ; Return adjustment)	Pre-tensioning buckle strap (If sea belt worn : Stalk strap ; Return adjustment)

Pre-tensioning stalk (Simultaneous driver and passenger operation)	Pre-tensioning buckle strap (If seat belt worn : Stalk strap ; Return adjustment)	If seat belt worn : Seat-belt stalk (/) (If damaged) - If seat belt not worn no changing of the buckle strap (Non pre-tensioning)
Strap return on stalk strap	Stalk strap assembly / Strap return (If seat belt worn : Return adjustment ; Seat-belt stalk (/))	If seat belt not worn no changing o the buckle strap
Strap return on seat	Stalk strap assembly / Strap return (If seat belt worn : Return adjustment ; Seat-belt stalk (/))	If seat belt not worn no changing o the buckle strap

N.B. : In the case of a vehicle fitted with 2 satellites (front and rear), change the 2 satellites even if one of the modules was not triggered.

1.2. Accidental triggering without impact

Pyrotechnic devices activated	Compulsory replacements	Optional replacements
Driver's airbag	Air bag module - Rotary connector or COM 2000	-
Passenger air bag under facing or withcapping	Air bag module (In the case of an air bag under facing : Dashboard (Application : FEM 103) - In the case of an air bag with capping : Check the fitting, the fits and clearances, the condition of the fascia ; If there are no anomalies, retain the fascia)	Check the fitting, the fits and clearances and the condition of the surrounding parts (Replace any defective parts)
Curtain air bag	Headlining (Triggering side : Satellite ; Air bag module ; Fittings (Windscreen pillars - Centre pillar upper trim - Rear quarter panel trim - Sun visor))	Triggering side : Door seal ; Shunts ; Various parts which may have been damaged during the deployment ; Grab handles. Seat belt adjustment
Front chest side air bag (Visible or under cover)	Triggering side : Satellite which caused the triggering ; Air bag module ; Seat cover and padding (If under cover)	Triggering side : Frame
Rear chest side air bag in frame under cover	Triggering side : Satellite which caused the triggering ; Frame with air bag module	Triggering side : Door seal ; Wheel arch trim (If damaged)
Rear chest side air bag in door trim pad under cover	Triggering side : Satellite which caused the triggering ; Air bag module ; Door panel	Triggering side : Door ; Door seal ; Window lift motor ; Door harness and other damaged accessories
driver's knee airbag	Air bag module	Check the fitting, the fits and clearances (If there are no anomalies, retain the fascia) Surrounding components damaged
Active Anti-Submarining (ASA)	Air bag module	Frame and trims if damaged ; If necessary surrounding parts (mat, connector, housing, etc.)
Pre-tensioning buckle	Pre-tensioning stalk strap (If seat belt worn : Seat-belt stalk (/) ; Return adjustment)	If seat belt not worn, no changing of the stalk straps ; Return adjustment

Pre-tensioning stalk	Pre-tensioning buckle strap (If seat belt worn : Stalk strap ; Return adjustment)	If seat belt not worn, no changing of the stalk straps ; Return adjustment
Strap return on stalk strap	Stalk strap assembly / Strap return (If seat belt worn : Return adjustment ; Seat-belt stalk (/))	If seat belt not worn no changing of th buckle strap
Strap return on seat	Replacement of the triggered component (If seat belt worn : Return adjustment ; Seat-belt stalk (/))	If seat belt not worn no changing of th buckle strap

2. Visual methods for checking whether a component has been deployed

The triggering of an inertia reel is indicated by :

- Air bag warning light illuminated on the instrument panel
- A fault code recorded and read using the diagnostic equipment
- A characteristic noise of balls noticed following removal of the inertia reel

3. Instructions for replacement of parts

The parts replaced will be deployed in the following cases :

- Parts to be destroyed
- Parts which have passed their validity date

CAUTION : Therefore, all warranty return parts required will be returned without being deployed.

4. Conditions for transporting explosive components

The packaging recovered from the replacement part must be used to transport the parts.

5. Repairability of the harness

The repair of all of the harnesses is permitted using strictly RAYCHEM welded unions observing the operating procedure.
Compulsory method of repair : Equipment (RAYCHEM).

ESSENTIAL : Repair of the wires must be carried out with heat shrink sleeves and outer covers ((-).1228 kit).

Replace the generator connecting harness if the connector is damaged following triggering.
In the case of a module supplied with a harness, the whole will be replaced.

6. Check after operation

ESSENTIAL : After any work performed on the central airbags system, carry out a fault reading with the diagnostic equipment .

REPLACEMENT : PYROTECHNIC COMPONENTS (FOLLOWING TRIGGERING OF THE AIR BAGS AND SEAT BELTS) ; INSTRUCTION FOR REPLACEMENT OF FAULTY PARTS AND REPAIRABILITY OF THE HARNESS

Replace (In the event of impacts and following each triggering) :

- Gas generator connectors (If damaged)
- The central control unit
- The elements listed below (according to equipment)

1. Parts required

Regardless of the activation of the pyrotechnic equipment (impact or accidental triggering), the triggering unit of this equipment (or air bag ECU) must be changed.

CAUTION : The special gas generator connectors must be replaced if they are damaged.

1.1. Triggering with impact

Pyrotechnic devices activated	Compulsory replacements	Optional replacements
Driver’s airbag	Airbag module - The steering wheel - Rotary connector / Control on the steering column	Steering column
Passenger air bag under facing or withcapping	Airbag module - Dashboard	Check the fitting, the fits and clearances and the condition of th surrounding parts (Replace any defective parts)
Curtain air bag	Headlining - Impact side : Satellite ; Airbag module; Mouldings (Windscreen pillar - Centre pillar upper trim - Rear quarter panel trim - Grab handles - Sun visor) Pre-tensioning or non-pre-tensioning stalk strap	Impact side : Door seal ; Shunts ; Various parts which may have been damaged during the deployment - Seat belt adjustment
Front chest side air bag (Visible or under cover)	Impact side : Satellite ; Complete seat (including buckle strap and slide sensors) - Pre-tensioning or non-pre-tensioning stalk strap	Impact side : Seat belt adjustment Inertia reel seat belt
Rear chest side air bag in door trim pad under cover (Triggering combined with front chest)	Impact side : Satellite ; Airbag module ; Door panel ; Door	Impact side : Glass ; seal; Window motor ; Door harness and other damaged accessories
driver’s knee airbag(Triggering combined with driver and passenger air bag)	Airbag module; Dashboard	steering column covers ; Lower components of the fascia
ASA (Active Anti-Submarining)	Airbag module	Frame and trims if damaged ; If necessary surrounding parts (mat, connector, housing, etc.)
Pre-tensioning buckle (Simultaneous driver and passenger operation)	Pre-tensioning buckle strap (If seat belt worn : Inertia reels ; Return adjustment)	Pre-tensioning buckle strap (If sea belt worn : Stalk strap ; Return adjustment)

Pre-tensioning stalk (Simultaneous driver and passenger operation)	Pre-tensioning stalk - Return adjustment (If seat belt worn : Stalk strap)	If seat belt worn : Seat-belt stalk (I damaged) - If seat belt not worn, no changing of the buckle strap (Non pre-tensioning)
Strap return on stalk strap	Reel and belt return assembly(If seat belt worn : Return adjustment ; Seat-belt stalk)	If seat belt not worn, no changing of the buckle strap
Strap return on seat	Reel and belt return assembly(If seat belt worn : Return adjustment ; Seat-belt stalk)	If seat belt not worn, no changing of the buckle strap
Active pedestrian impact bonnet	Pedestrian impact sensor, pedestrian impact accelerometer sensor, pedestrian impact ECU, actuators, hinges, hinge covers (according to equipment)	Check the electrical harnesses an connectors
Rear, protective, pop-up roll-over hoops (Coupe cabriolet)	Rear, protective, pop-up roll-over hoops cassette ; Roll-over ECU	-

N.B. : In the case of a vehicle fitted with 2 satellites (front and rear), change the 2 satellites even if one of the modules was not triggered.

1.2. Accidental triggering without impact

Pyrotechnic devices activated	Compulsory replacements	Optional replacements
Driver’s airbag	Airbag module- Rotary connector / Control on the steering column	-
Passenger air bag under facing or withcapping	Airbag module- In the case of an air bag under facing : Dashboard In the case of an air bag with capping : Check the fitting, the fits and clearances, the condition of the fascia ; If there are no anomalies, retain the fascia	Check the fitting, the fits and clearances and the condition of the surrounding parts (Replace any defective parts)
Curtain air bag	Headlining (Triggering side : Satellite which caused the triggering ; Airbag module ; Mouldings(Windscreen pillar-Centre pillar upper trim - Rear quarter panel trim - Sun visor))	Triggering side : Door seal ; Shunts ; Various parts which may have been damaged during the deployment ; Grab handles ; Seat belt adjustment
Front chest side air bag visible or under cover	Triggering side : Satellite which caused the triggering ; Airbag module ; Seat cover and padding (If under cover)	Triggering side : Frame
Rear chest side air bag in frame under cover	Triggering side : Satellite which caused the triggering ; Frame with air bag module	Triggering side : Door seal ; Wheel arch lining(If damaged)
Rear chest side air bag in door trim pad under cover	Triggering side : Satellite which caused the triggering ; Airbag module: Door panel	Triggering side : Door ; Door seal ; Window motor ; Door harnesses and other accessories (If damaged)
driver’s knee airbag	Airbag module	Check the fitting, the fits and clearances (Free ofanomalies : No replacement of the fascia) Surrounding components damaged
ASA (Active Anti-Submarining)	Airbag module	Frame and trims if damaged ; If necessary surrounding parts (mat, connector, housing, etc.)

Pre-tensioning buckle	Pre-tensioning buckle strap (If seat belt worn : Stalk strap ; Return adjustment)	If seat belt not worn, no changing of the stalk straps ; Return adjustment
Pre-tensioning stalk	Pre-tensioning stalk strap (If seat belt worn : Seat-belt stalk ; Return adjustment)	If seat belt not worn, no changing of the stalk straps ; Return adjustment
Strap return on stalk strap	Reel and belt return assembly(If seat belt worn : Return adjustment ; Seat-belt stalk)	If seat belt not worn, no changing of the buckle strap
Strap return on seat	Replacement of the triggered component (If seat belt worn : Return adjustment ; Seat-belt stalk)	If seat belt not worn, no changing of the buckle strap
Active pedestrian impact bonnet	Actuators, pedestrian impact ECU, hinges, hinge covers (according to equipment)	Check the electrical harnesses and the connectors, the pedestrian impact sensor, the pedestrian impact accelerometer sensor
Rear, protective, pop-up roll-over hoops (Coupe cabriolet)	Rear, protective, pop-up roll-over hoops cassette ; Unit if triggered by pyrotechnic lock	In the case of mechanical triggering, the rear, protective, pop-up roll-over hoops can be reset

2. Visual methods for checking whether a component has been deployed

2.1. Pre-tensioning seat belt reel(s)

The triggering of an inertia reel is indicated by :

- Lighting of the side airbag warning light on the instrument panel
- A fault code recorded and read using the diagnostic equipment
- A characteristic noise of balls noticed following removal of the inertia reel

2.2. Passenger air bag neutralisation switch



Figure : C5JM0C3D

The status of the disarming switch for the passenger airbag is activated in the on position, or de-activated in the off position, by means of the ignition key :

- The on position triggers the airbag in the case of a frontal impact
- The displaying of this function is enhanced for use by an indicator light on the instrument panel

3. Instructions for replacement of parts

The parts replaced will be deployed in the following cases :

- Parts to be destroyed
- Parts which have passed their validity date

CAUTION : Therefore, all warranty return parts required will be returned without being deployed.

4. Conditions for transporting explosive components

The packaging recovered from the replacement part must be used to transport the parts.

5. Repairability of the harness

The repair of all of the harnesses is permitted using strictly RAYCHEM welded unions observing the operating procedure.
Compulsory method of repair : Equipment (RAYCHEM).

CAUTION : Repair of the wires must be carried out with heat shrink sleeves and outer covers : [1228] kit.

Replace the generator connecting harness if the connector is damaged following triggering.
In the case of a module supplied with a harness, the whole will be replaced.

6. Check after operation

CAUTION : After any work performed on the central airbags system, carry out a fault reading with the diagnostic equipment .

DACTIVATION / ACTIVATION : CENTRAL AIRBAG AND SEATBELT SYSTEM

1. Deactivation

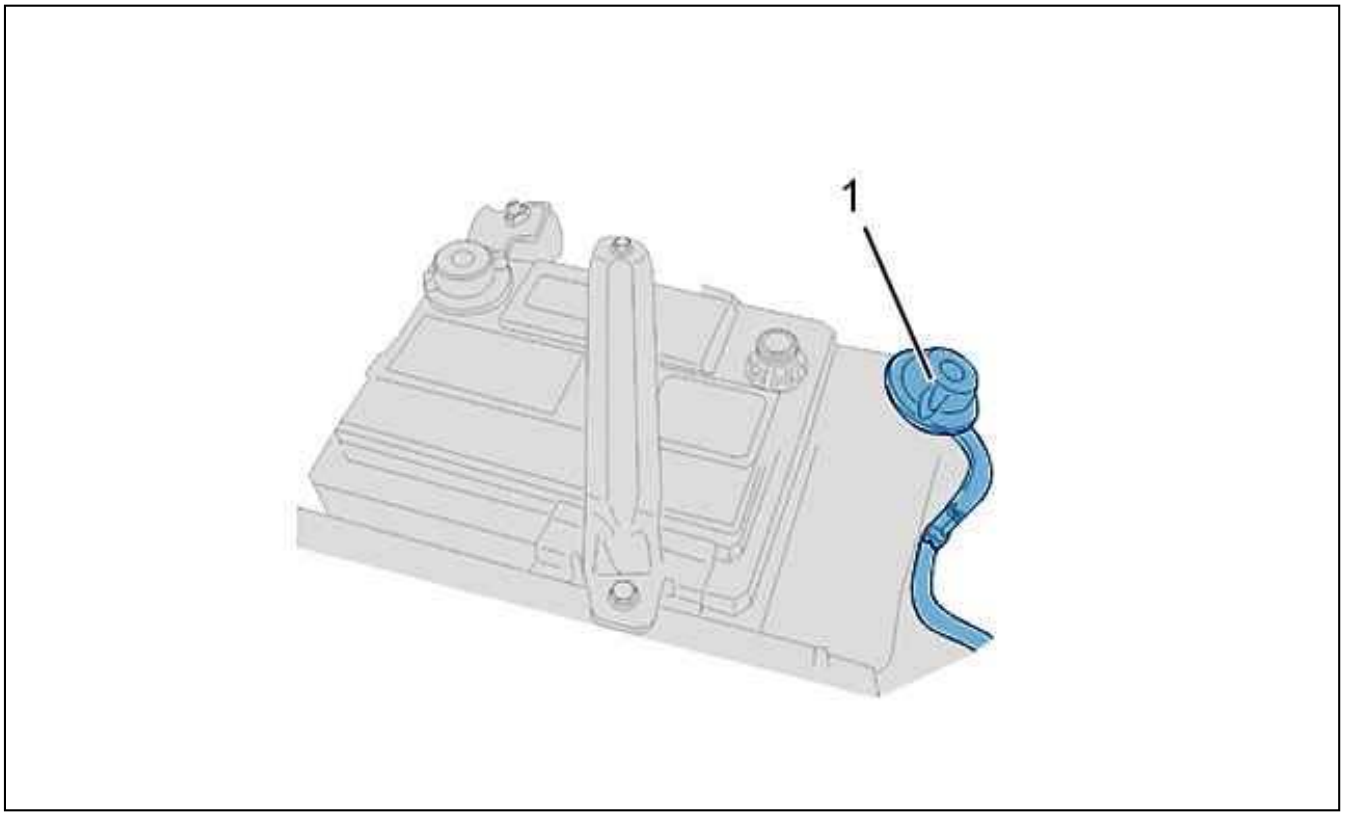

Figure : D1AP03CD

Disconnect the battery negative cable (1).
Protect the cable and the negative terminal in order to prevent any contact.

CAUTION : Wait for at least 5 minutes before performing any operations (discharging of the airbag ECU power reserve).

CAUTION : The ECU must not be removed with the connector still connected under any circumstances.

Disconnect the airbag ECU connector.

2. Activation

ESSENTIAL : The area of the airbags and pyrotechnic seat belts should be kept clear, both of objects and of people.

Ignition off : Connect the airbag ECU connector.
Connect the battery negative cable.
On the driver's side, door open, ignition on, keeping the steering wheel module activation area clear.
Check the system is operating correctly by checking the airbag fault LEDs.

N.B. : After disconnecting the battery, some electronic systems (injection, safety auto-reverse system ...) need ar

initialisation procedure ; Perform the appropriate initialisation procedures.

DACTIVATION / ACTIVATION : PYROTECHNIC SYSTEMS (TECHNICAL NOTE)

1. Deactivation

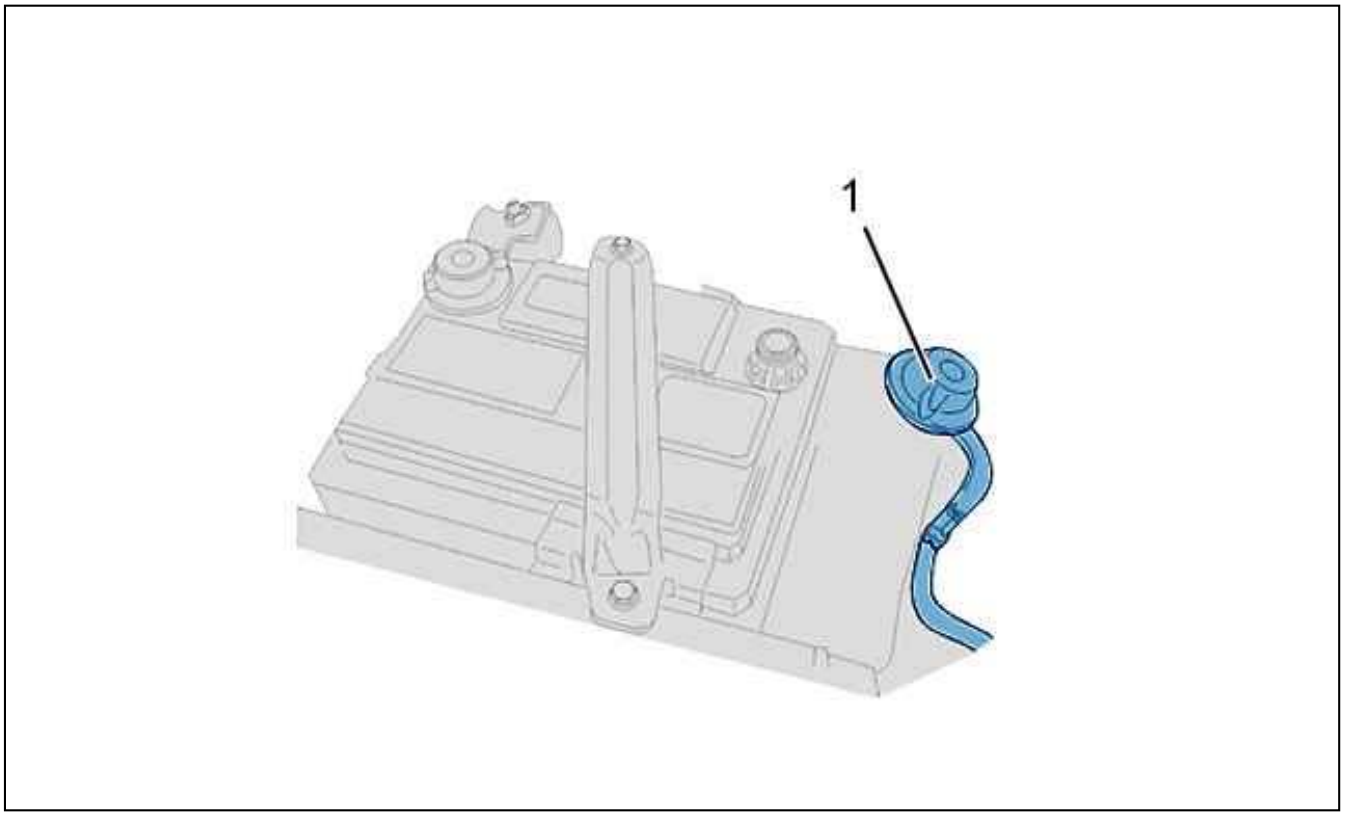

Figure : D1AP03CD

Disconnect the battery negative cable (1).
Protect the cable and the negative terminal in order to prevent any contact.

CAUTION : Wait for at least 5 minutes before performing any operations (discharging of the airbag ECU power reserve).

CAUTION : The ECU must not be removed with the connector still connected under any circumstances.

Disconnect the airbag ECU connector.

2. Activation

ESSENTIAL : The area of the airbags and pyrotechnic seat belts should be kept clear, both of objects and of people.

Ignition off : Connect the airbag ECU connector.
Connect the battery negative cable.
On the driver's side, door open, ignition on, keeping the steering wheel module activation area clear.
Check the system is operating correctly by checking the airbag fault LEDs.

N.B. : After disconnecting the battery, some electronic systems (injection, safety auto-reverse system ...) need ar

initialisation procedure ; Perform the appropriate initialisation procedures.

REMOVING - REFITTING : SIDE SLIDING DOOR WINDOW

ESSENTIAL : Observe the safety and cleanliness recommendations.

1. Recommended tools

Glazing consumable .

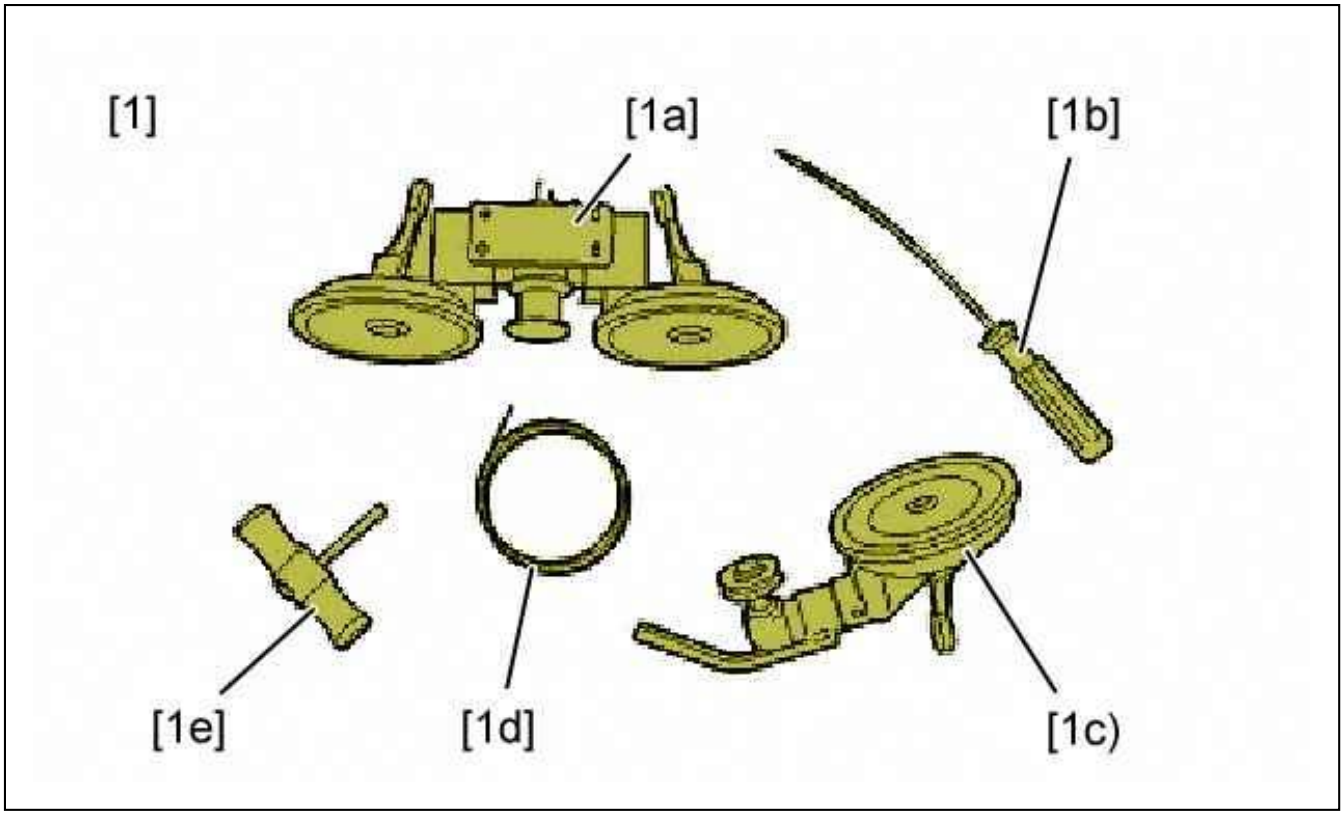

Figure : E5AP2ZQD

[1] Bonded windows removal kit (-).1354.
Composition of the toolkit :

- [1a] Guide roller device
- [1b] Awl
- [1c] Guiding roller
- [1d] Square section cutting wire
- [1e] handle

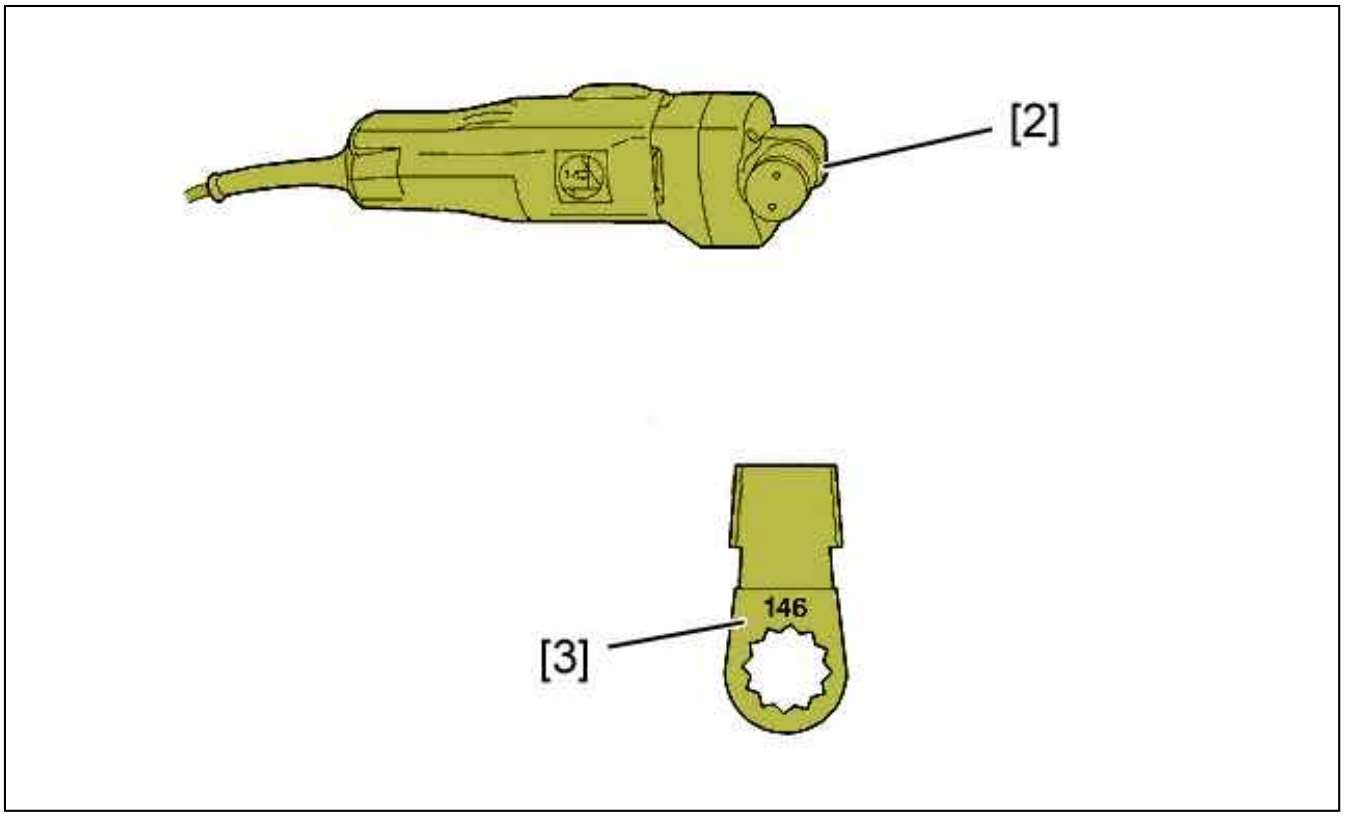

Figure : E5AP2ZRD

[2] electric knife.
[3] shovel blade N° 146.

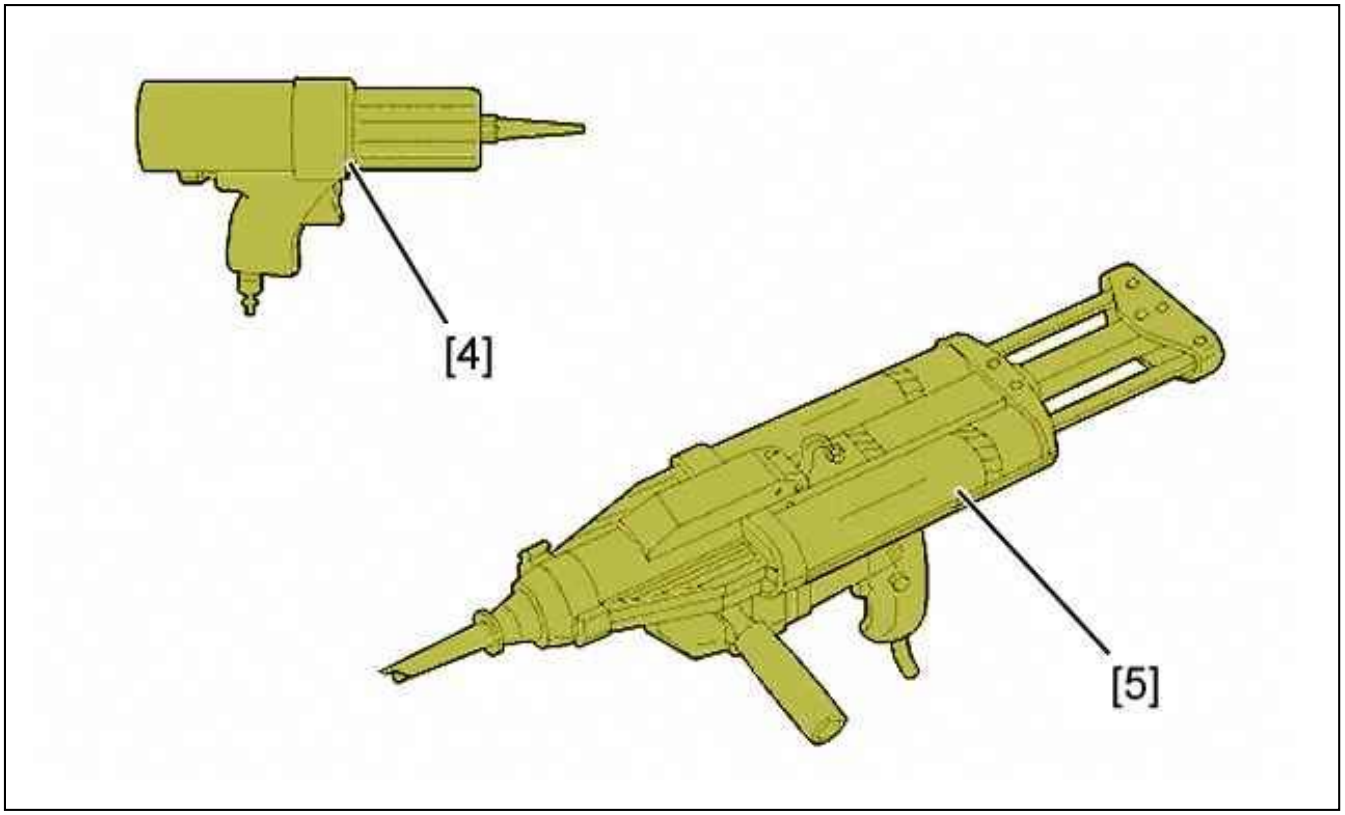

Figure : E5AP30AD

[4] Pneumatic gun (For one part cartridge).

[5] Electric gun (For two-part cartridge).

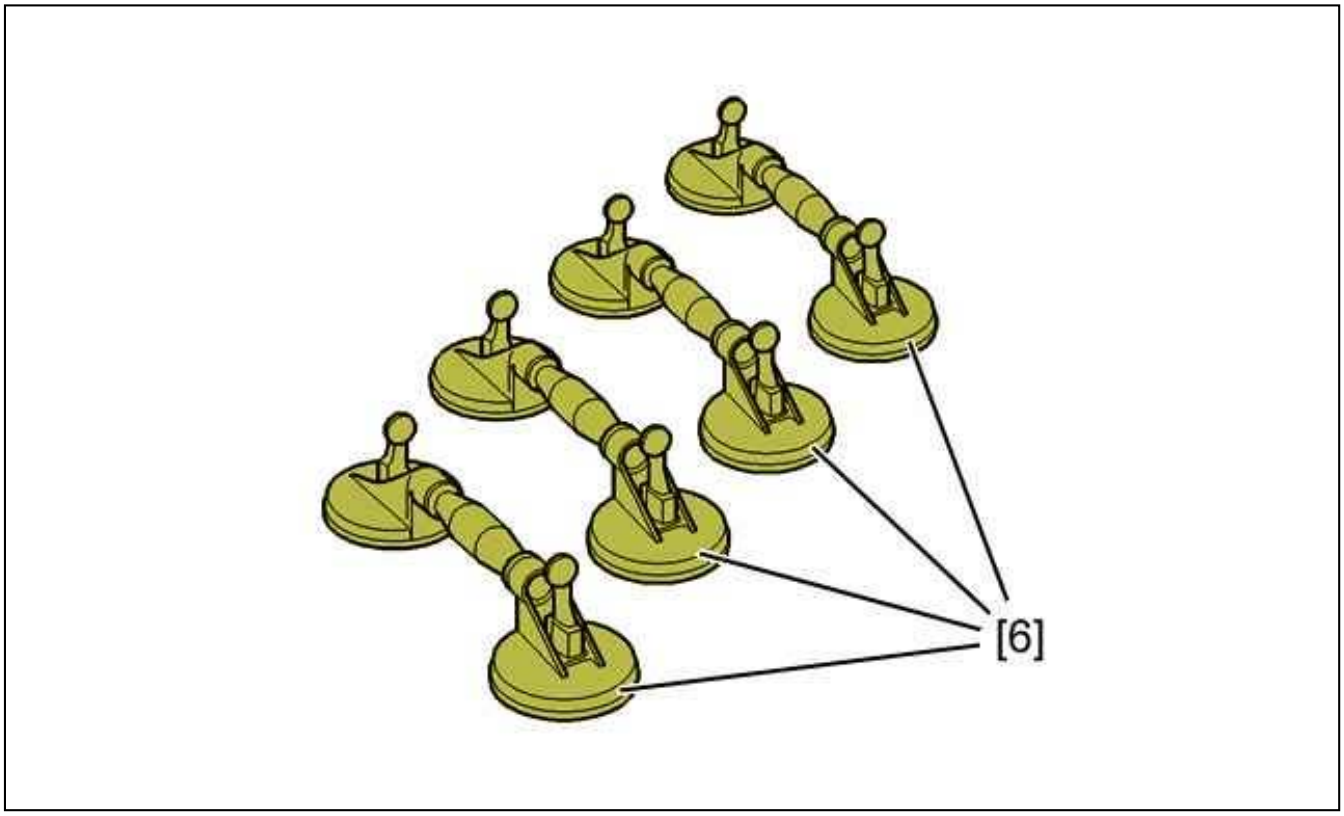

Figure : E5AP2ZTD

[6] Articulated suction pads (Part number 9776.Y0).

2. Removing

2.1. Mobile glass

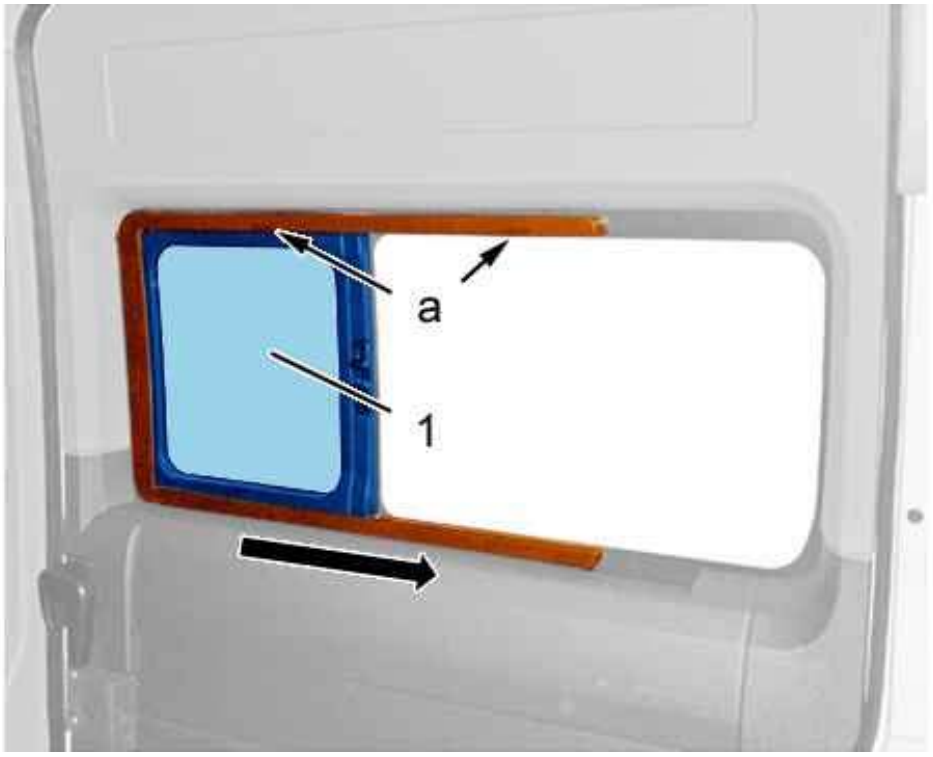

Figure : C5CM025D

Withdraw the trim covers (at "a").
Open the sliding side door moving window (1) (following the arrow).

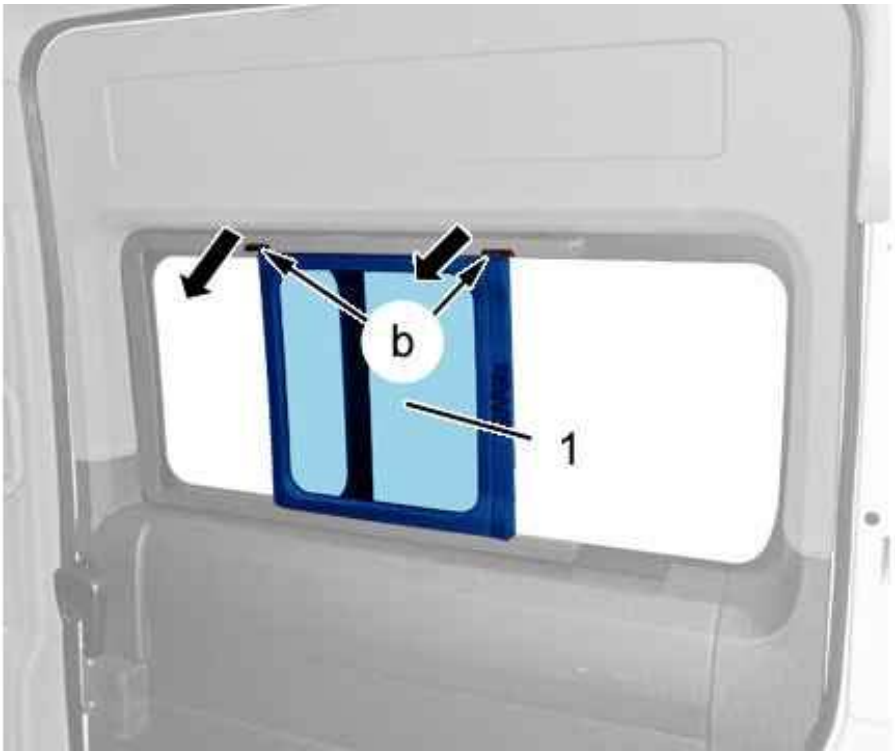

Figure : C5CM026D

Detach the moving window (1) through the openings(at "b").

Remove the sliding side door moving window (1) (as per arrows).

2.2. Fixed glass

Remove the sliding side door trims .

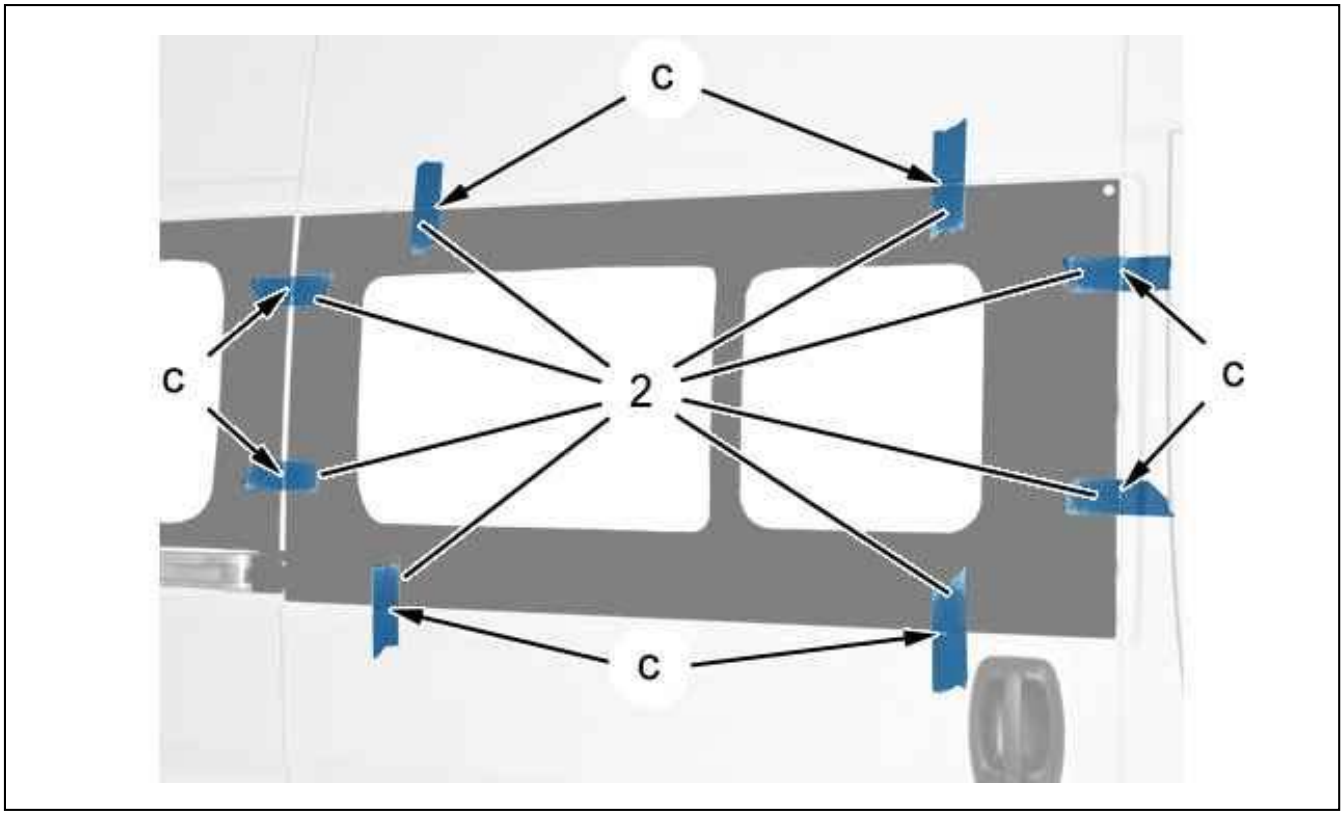

Figure : C5CM027D

N.B. : If the window is to be reused, align it and affix adhesive tape (2)(at "c").

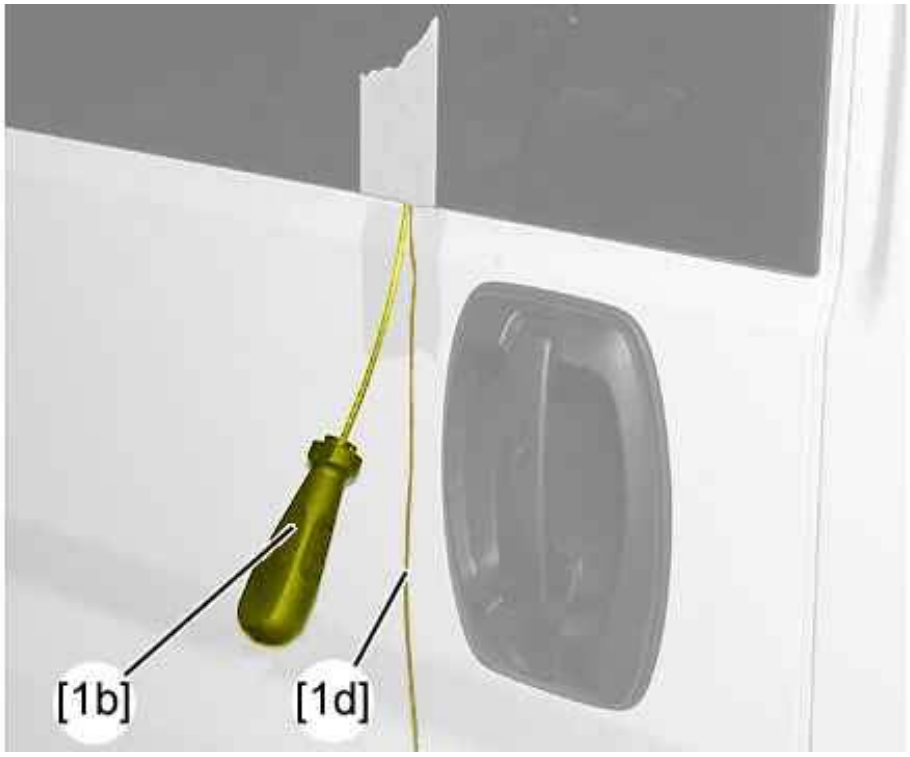

Figure : C5CM028D

Pass the awl [1b] through the bead of sealing adhesive, from the inside towards the outside.
Attach the cutting wire [1d] to the awl [1b].
Pass the cutting wire [1d] inside the vehicle.
Leave a sufficient length to permit fixing of the handles [1e].
Install the handles [1e] at each end of the cutting wire [1d].

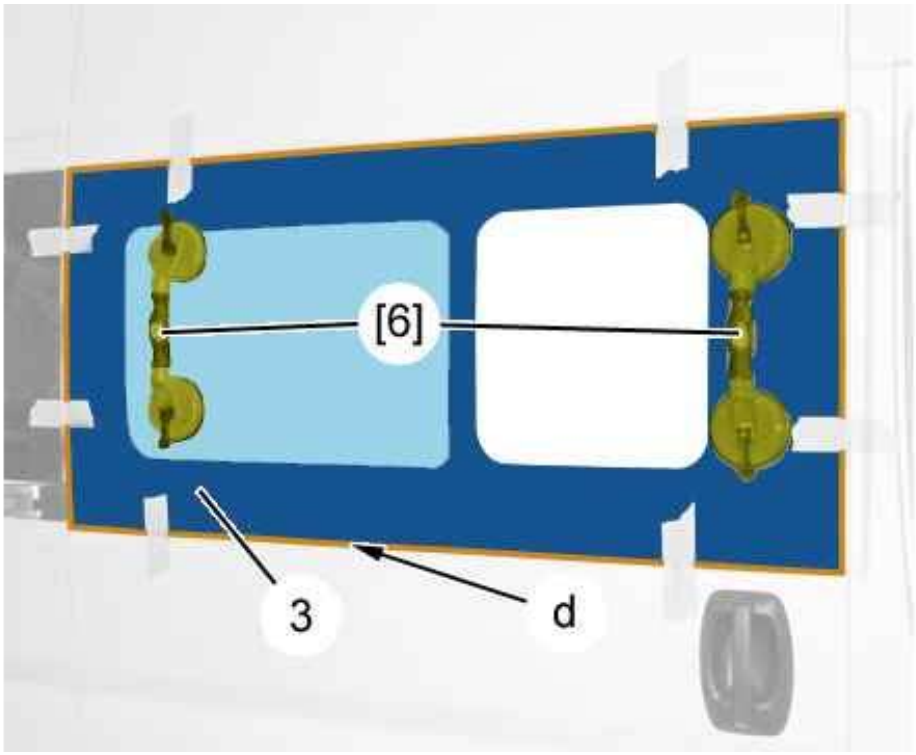

Figure : C5CM029D

Position : The double articulated suction pads [6].
Two people are required to perform the following operation.
The indexing pins must be cut.
Cut the sealing adhesive (at "d").

N.B. : At the slightest resistance of the wire while cutting, slacken it and assist it in passing the obstacle (Suppor shims, excessive thickness of the bead of adhesive or join between panels).

Remove : The sliding side door window (3) ; Using the double hinged suction cups [6].

3. Cleaning

3.1. Preparation : Side sliding door window

Reusing the sliding side door window :

- Fit the electric knife [2] with the blade [3]
- Remove the adhesive sealing bead
- Remove any dust using a clean cloth
- Only apply the primer to the zones laid bare

Fitting a new sliding side door fixed window :

- Degrease the edge of the glass with the degreaser
- Apply the glass primer provided in the bonding kit part number "A3"

N.B. : Only apply the primer to the zones laid bare.

3.2. Preparation of the aperture

On the remains of the bead of sealing adhesive :

- Fit the electric knife [2] with the blade [3]

- Remove the adhesive sealing bead
- Remove any dust using a clean cloth

On the new component :

- Degrease the aperture
- Apply the metal primer provided in the bonding kit part number "A3"
- Allow to dry for 10 mn

4. Refitting

4.1. Reusing the sliding side door window

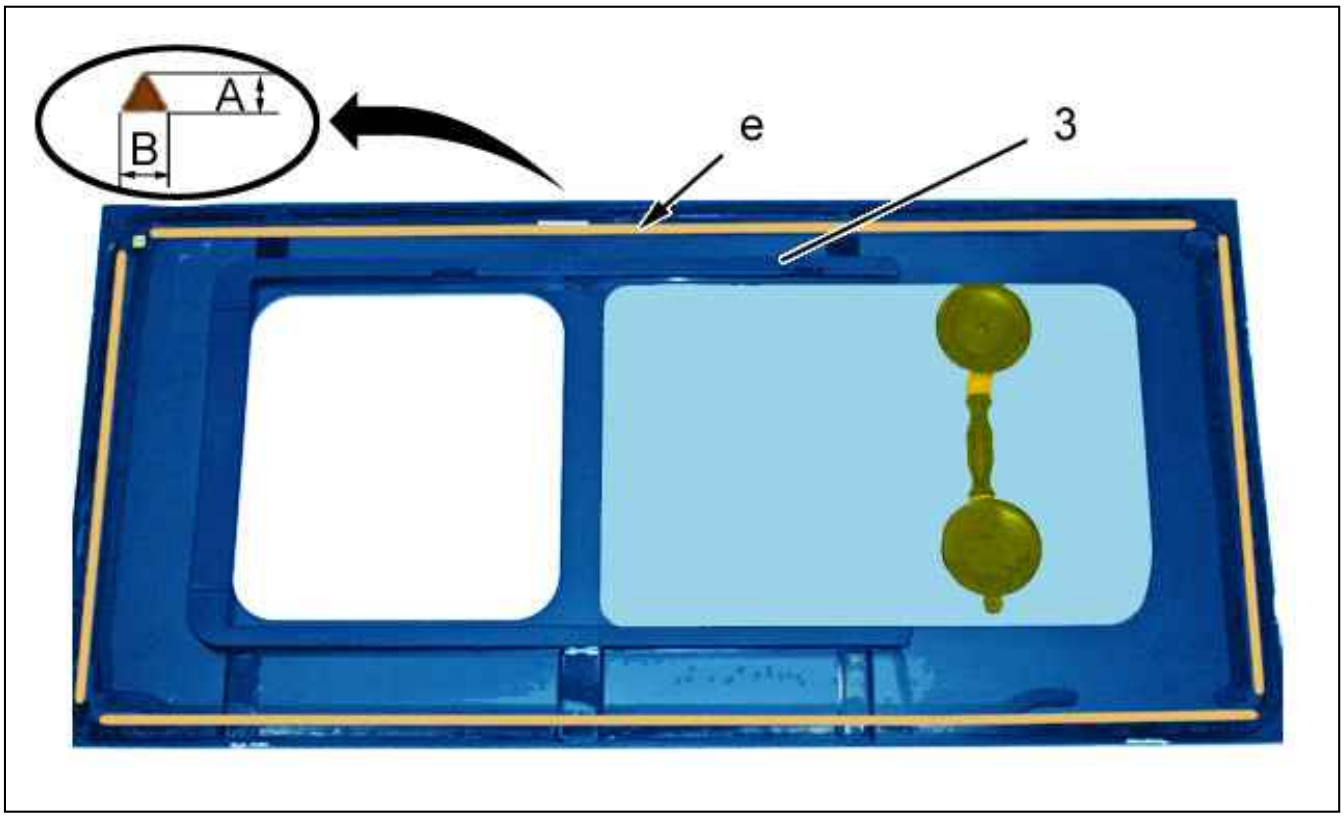

Figure : C5CM02AD

"A" = 12 mm .
"B" = 8 mm .
Cut the nozzle in triangular section to obtain a bead of sealing adhesive "B" wide and "A" deep.

ESSENTIAL : Always replace : The faulty seals.

Apply a bead of sealing adhesive to the periphery of the sliding side door (3) window (at "e") (using tools [4] or [5]).

ESSENTIAL : Use of the two part product: the time for fitting the window on the vehicle and the start of extrusion of the sealing adhesive is 5 minutes.

Refit : The sliding side door window :

- Using the double hinged suction cups [6]
- Using adhesive tapes (2)

Press gently on the periphery of the sliding side door (3) fixed window .

Clean the sliding side door fixed window and its periphery .

4.2. Fitting a new sliding side door fixed window

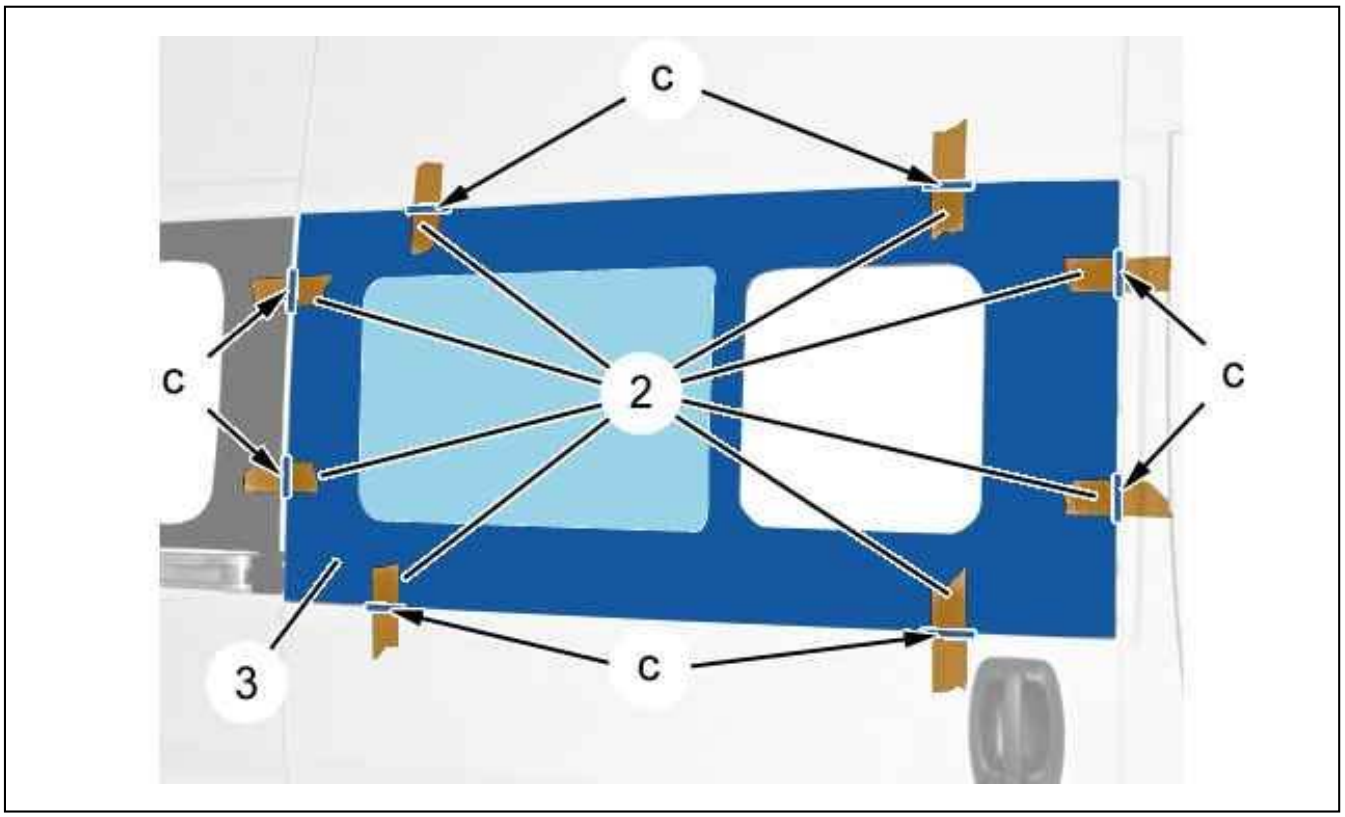

Figure : C5CM02BD

Test fit the sliding side door (3) window.
Position the adhesive strips (2).
Cut the tape (as "c").
Remove : The sliding side door window (3).
Apply a bead of sealing adhesive to the periphery of the sliding side door (3) window (at "d") (using tools [4] or [5]).

ESSENTIAL : Use of the two part product: the time for fitting the window on the vehicle and the start of extrusion of the sealing adhesive is 5 minutes.

Refit : The sliding side door window :

- Using the double hinged suction cups [6]
- Using adhesive tapes (2)

Press gently on the periphery of the sliding side door (3) fixed window .
Clean the sliding side door fixed window and its periphery .

ESSENTIAL : Observe the vehicle immobilisation time following fitting of the windscreen recommended by the suppliers of the products used.

Refit : The wind-down (Proceed in the reverse order to removal).
Continue the fitting operations in the reverse order to removal.
Check the sealing of the sliding side door (3) fixed window .
Clean the sliding side door fixed window and its periphery .

REMOVING - REFITTING : SIDE MOULDINGS (EXTERIOR PROTECTION)

ESSENTIAL : Observe the safety and cleanliness recommendations.

1. Recommended tools

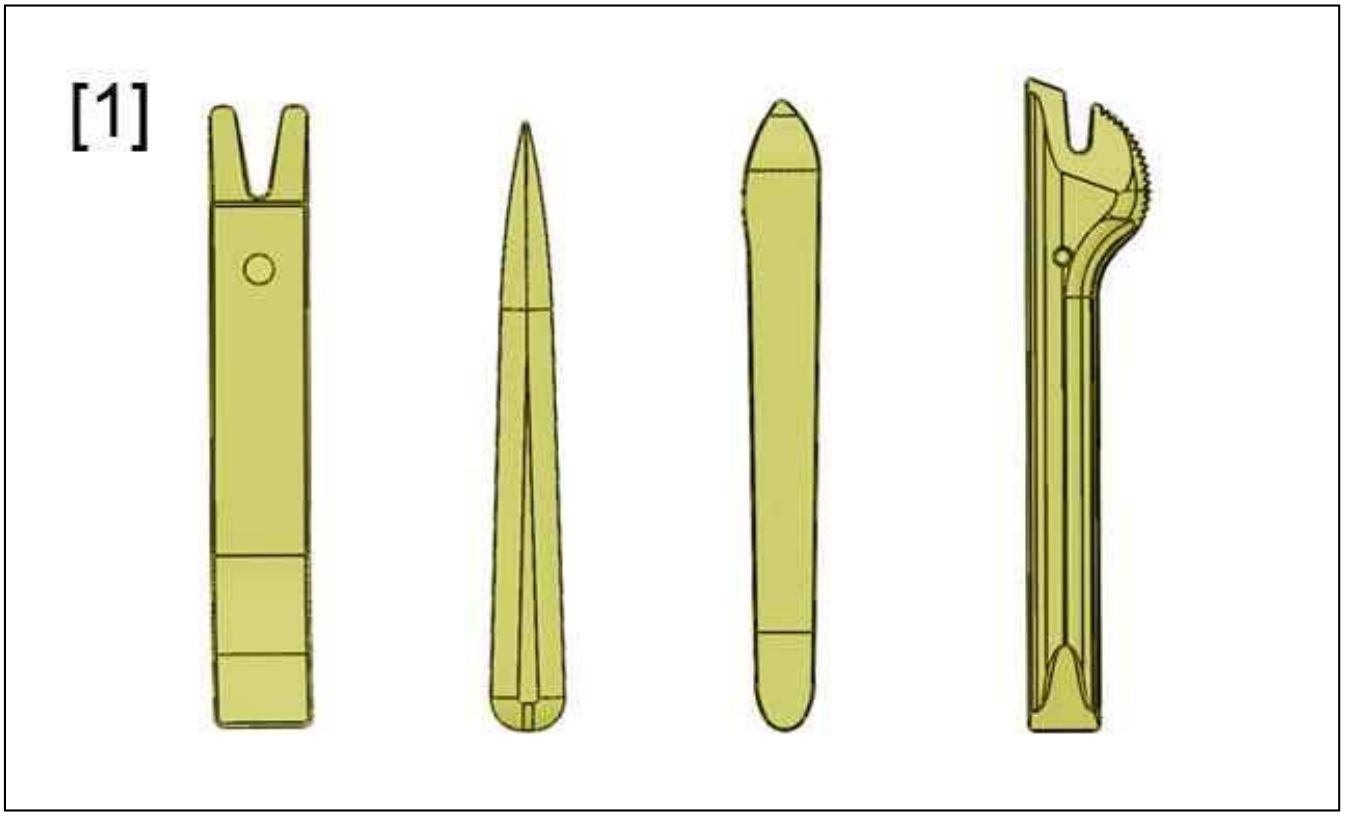

Figure : E5AP30WD

[1]Stripping tools(-).1350-ZZ.

2. Removing

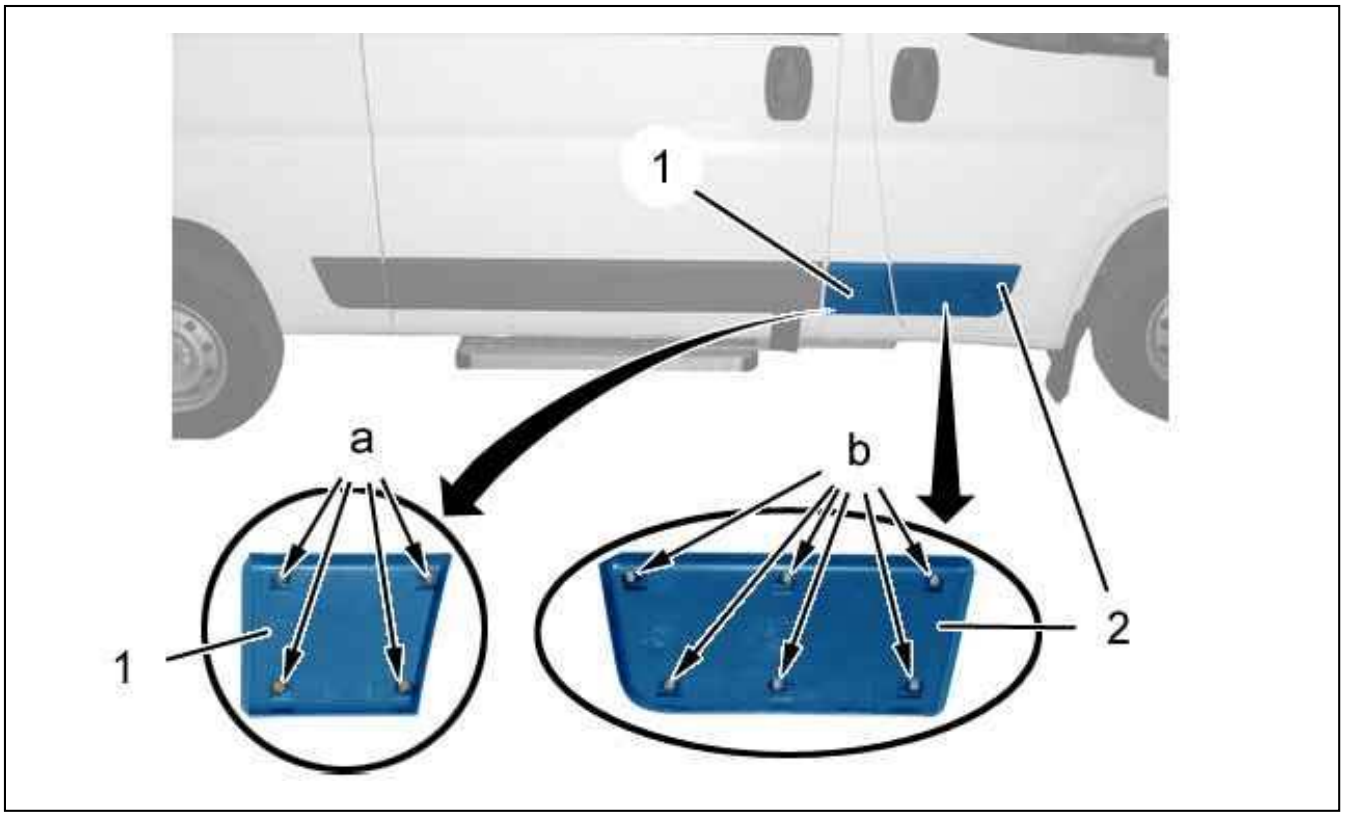

Figure : C5JM04AD

Unclip (at "a", "b") ; Using tool [1].
Remove :

- The front quarter panel protective strip (1)
- The front door protective strip (2)

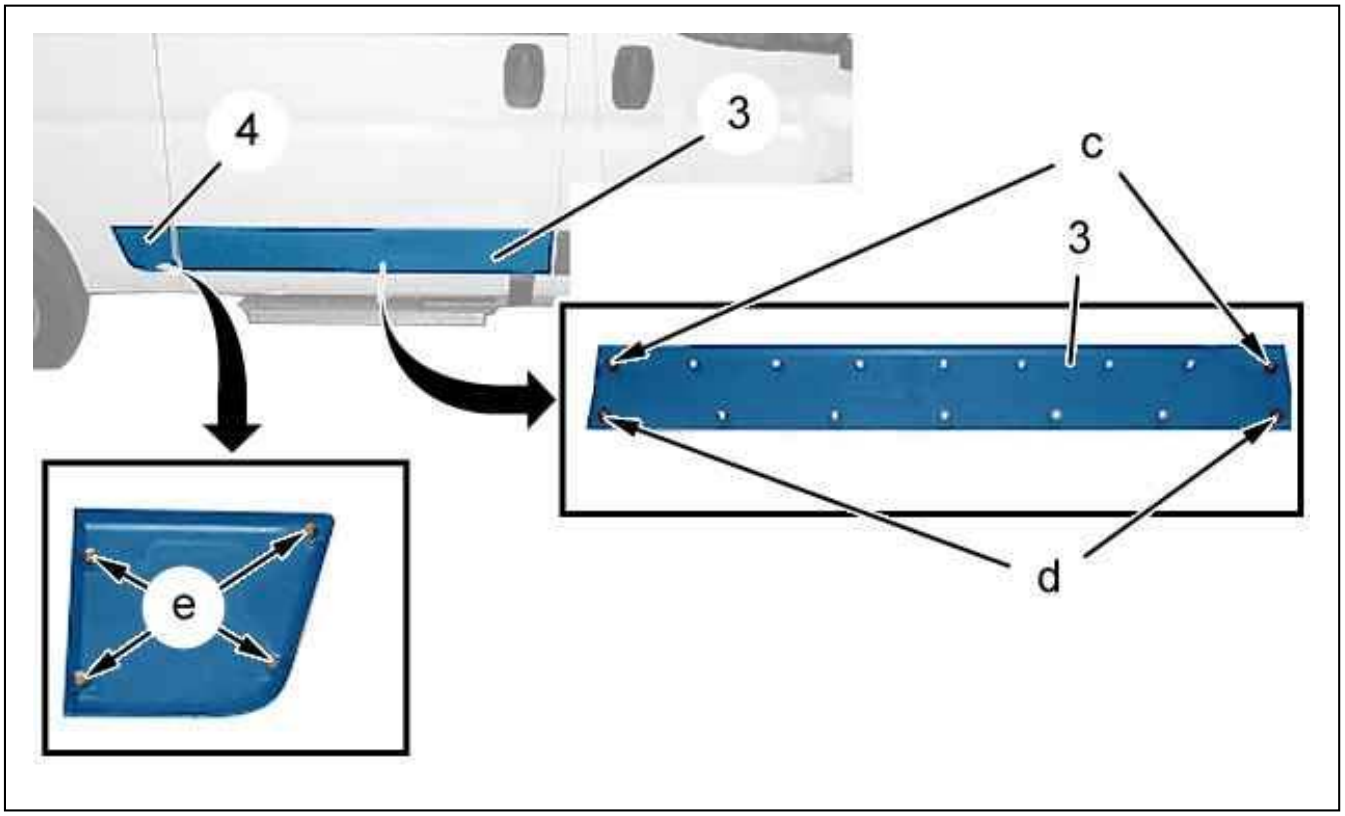

Figure : C5JM04BD

Unclip (at "c", "d", "e") ; Using tool [1].
Remove :

- The strip (3) (The side sliding door)
- The strip (4) (Side panel)

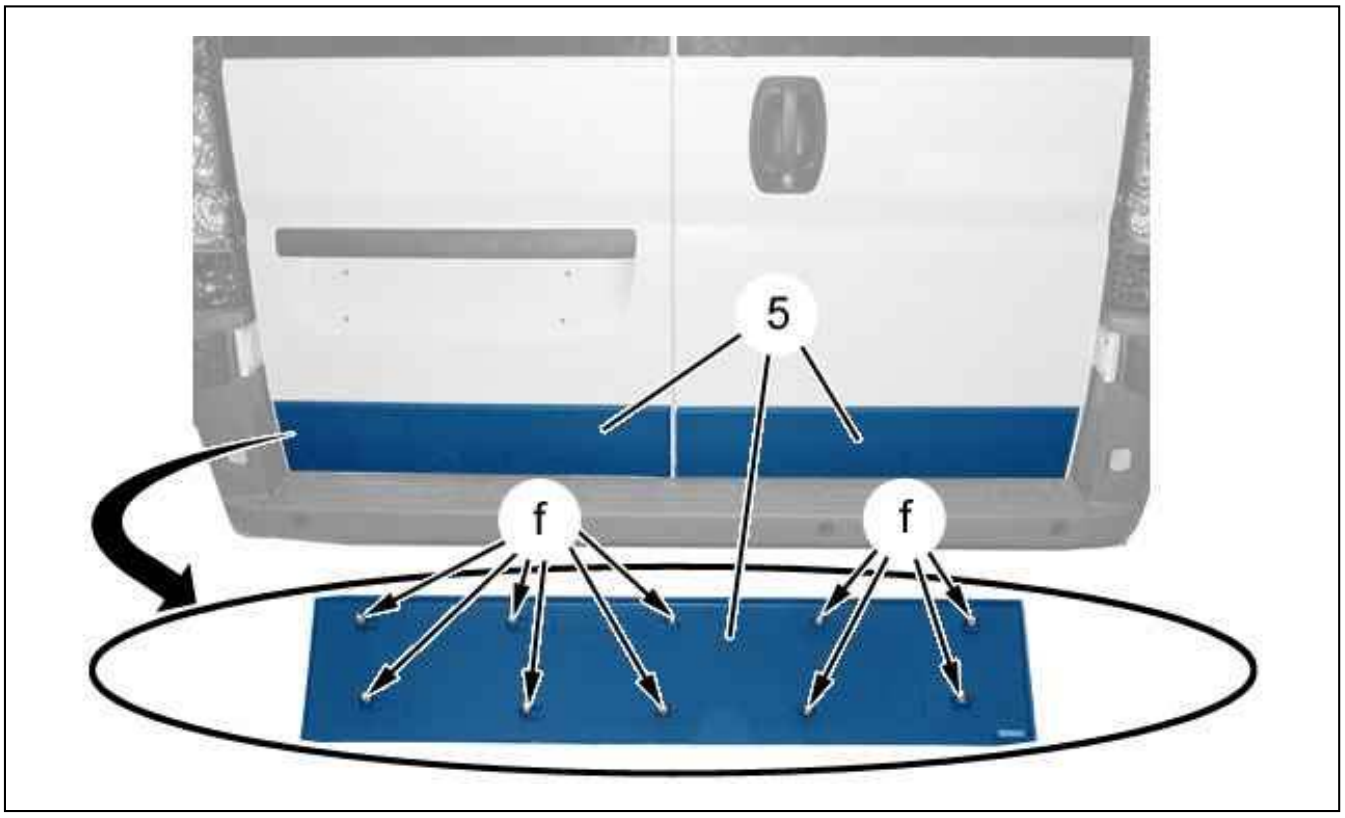

Figure : C5JM04CD

Unclip (at "f") ; Using tool [1].
Remove : The rubbing strips (5) (Rear doors).

3. Refitting

ESSENTIAL : Always replace : Damaged clips.

Proceed in the reverse order to removal.

REMOVING - REFITTING : SIDE SLIDING DOOR WINDOW

ESSENTIAL : Observe the safety and cleanliness recommendations.

1. Recommended tools

Glazing consumable .

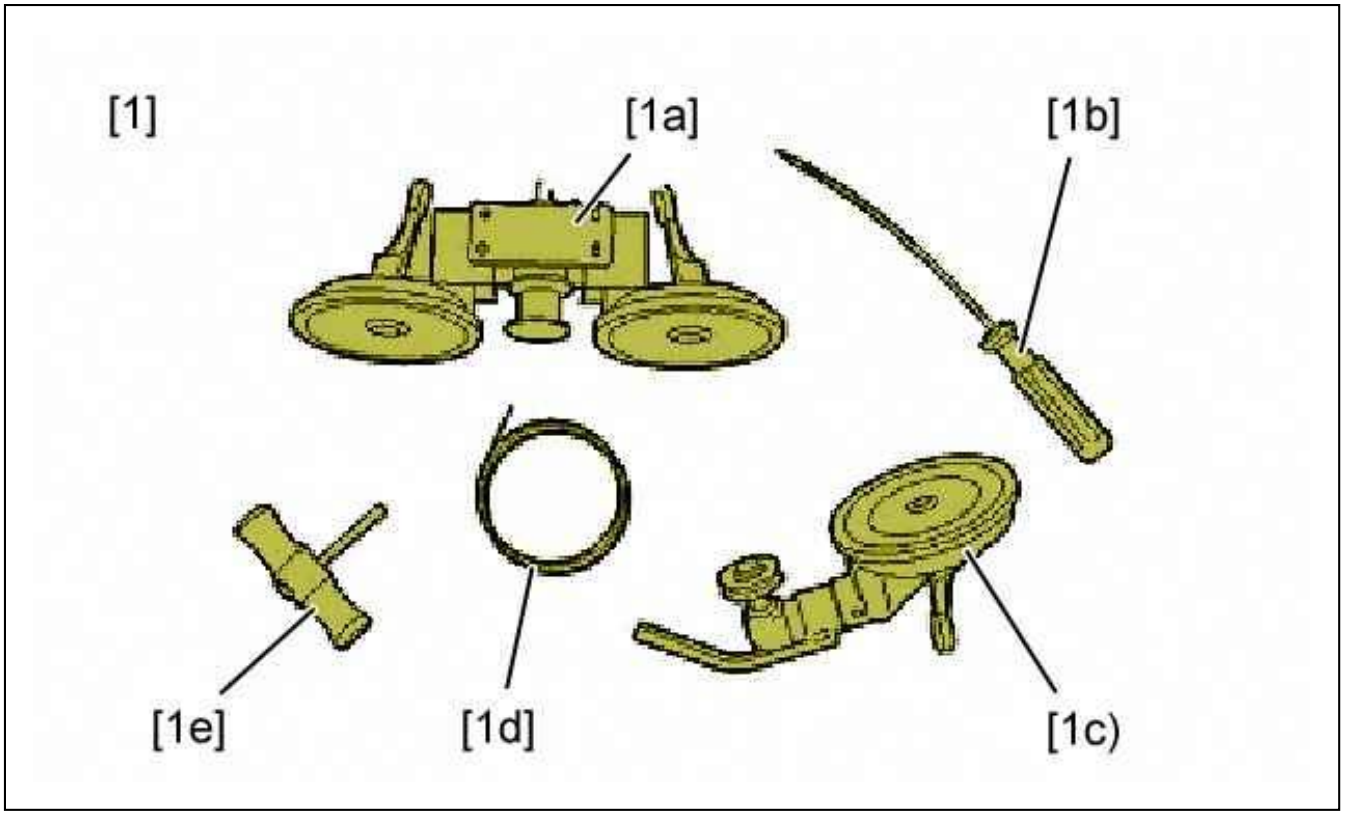

Figure : E5AP2ZQD

[1] Bonded windows removal kit (-).1354.
Composition of the toolkit :

- [1a] Guide roller device
- [1b] Awl
- [1c] Guiding roller
- [1d] Square section cutting wire
- [1e] handle

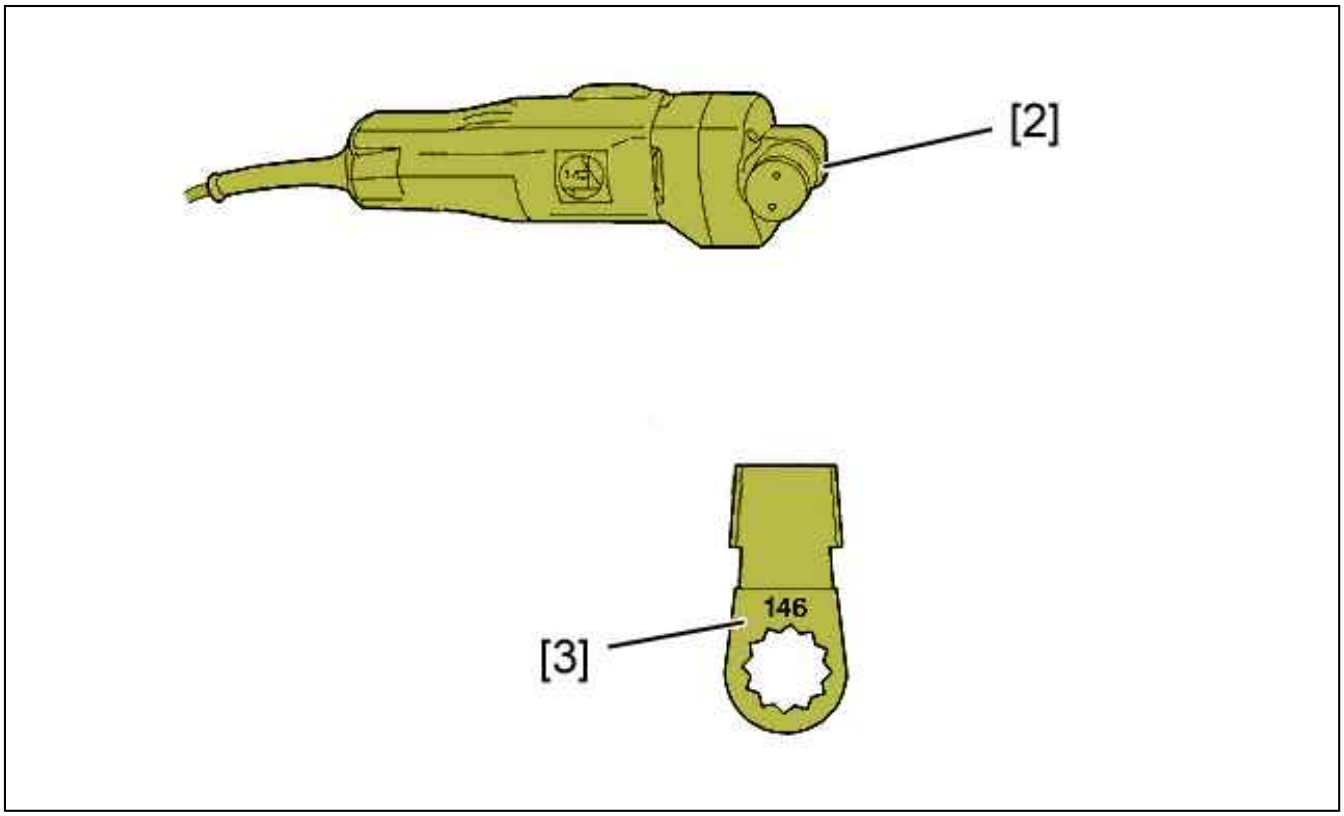

Figure : E5AP2ZRD

[2] electric knife.
[3] shovel blade N° 146.

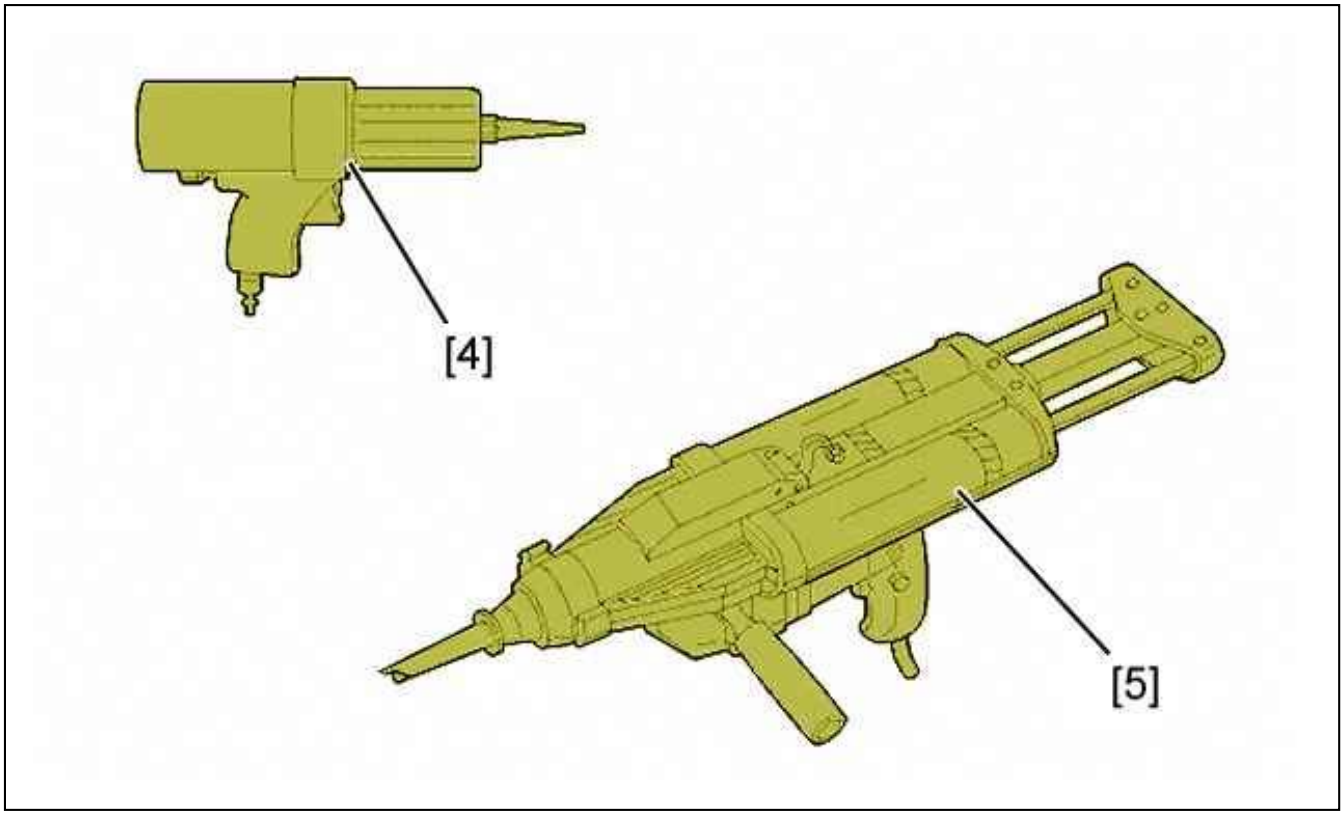

Figure : E5AP30AD

[4] Pneumatic gun (For one part cartridge).

[5] Electric gun (For two-part cartridge).

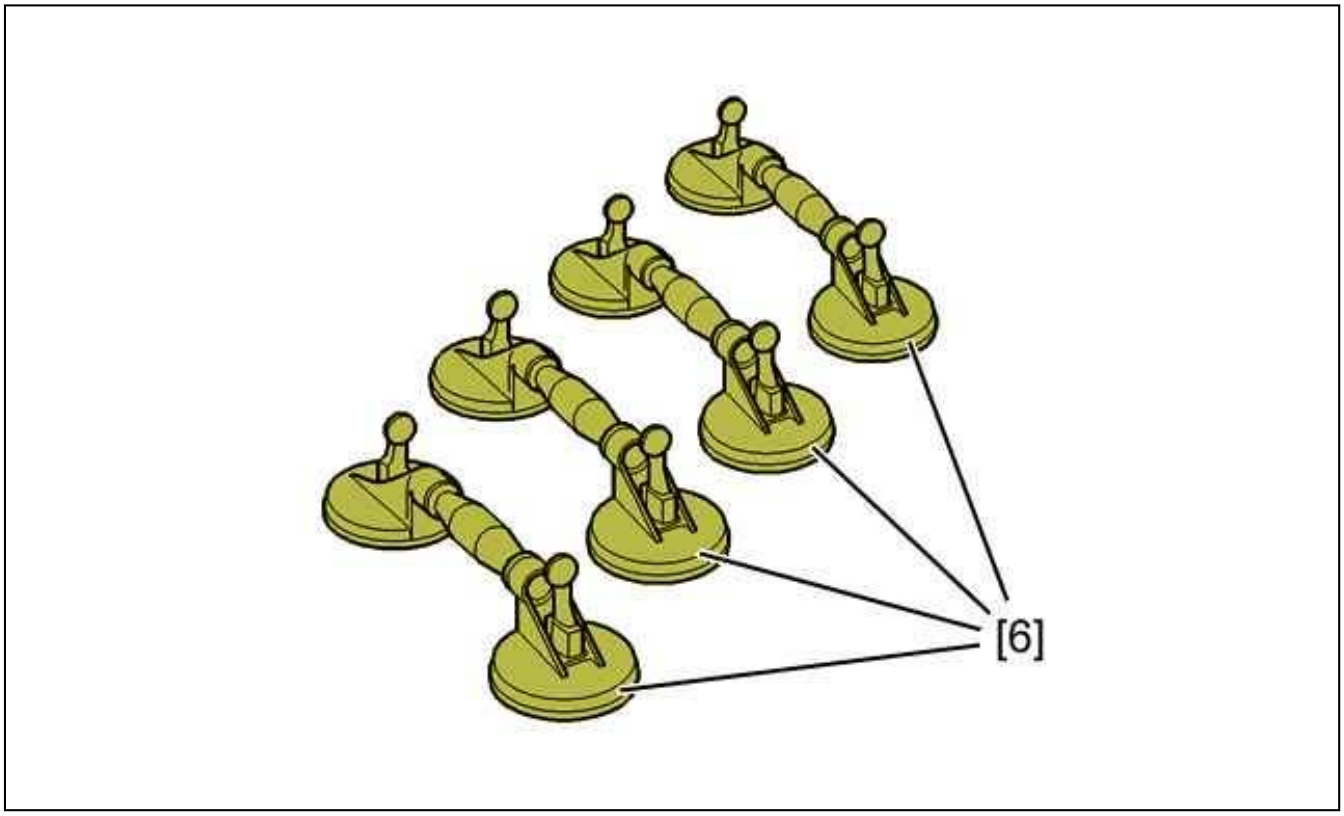

Figure : E5AP2ZTD

[6] Articulated suction pads (Part number 9776.Y0).

2. Removing

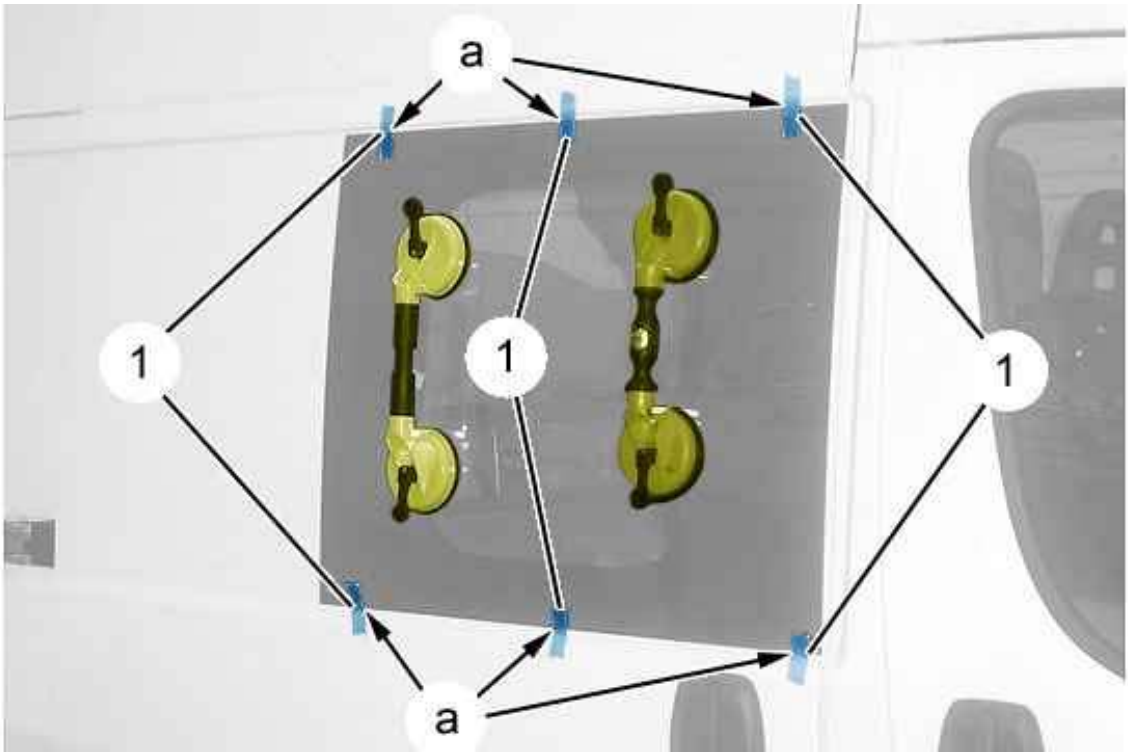

Figure : C4CM2FDD

N.B. : If the window is to be reused, align it and affix adhesive tape (1) (as "a").

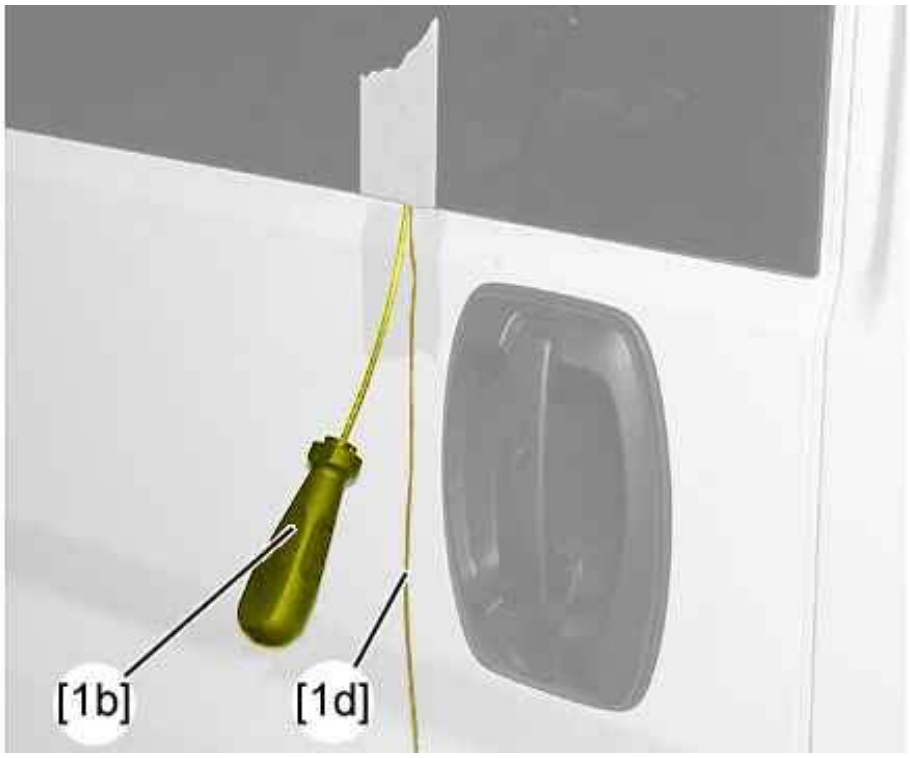

Figure : C5CM028D

Pass the awl [1b] through the bead of sealing adhesive, from the inside towards the outside.

Attach the cutting wire [1d] to the awl [1b].
Pass the cutting wire [1d] inside the vehicle.
Leave a sufficient length to permit fixing of the handles [1e].
Install the handles [1e] at each end of the cutting wire [1d].

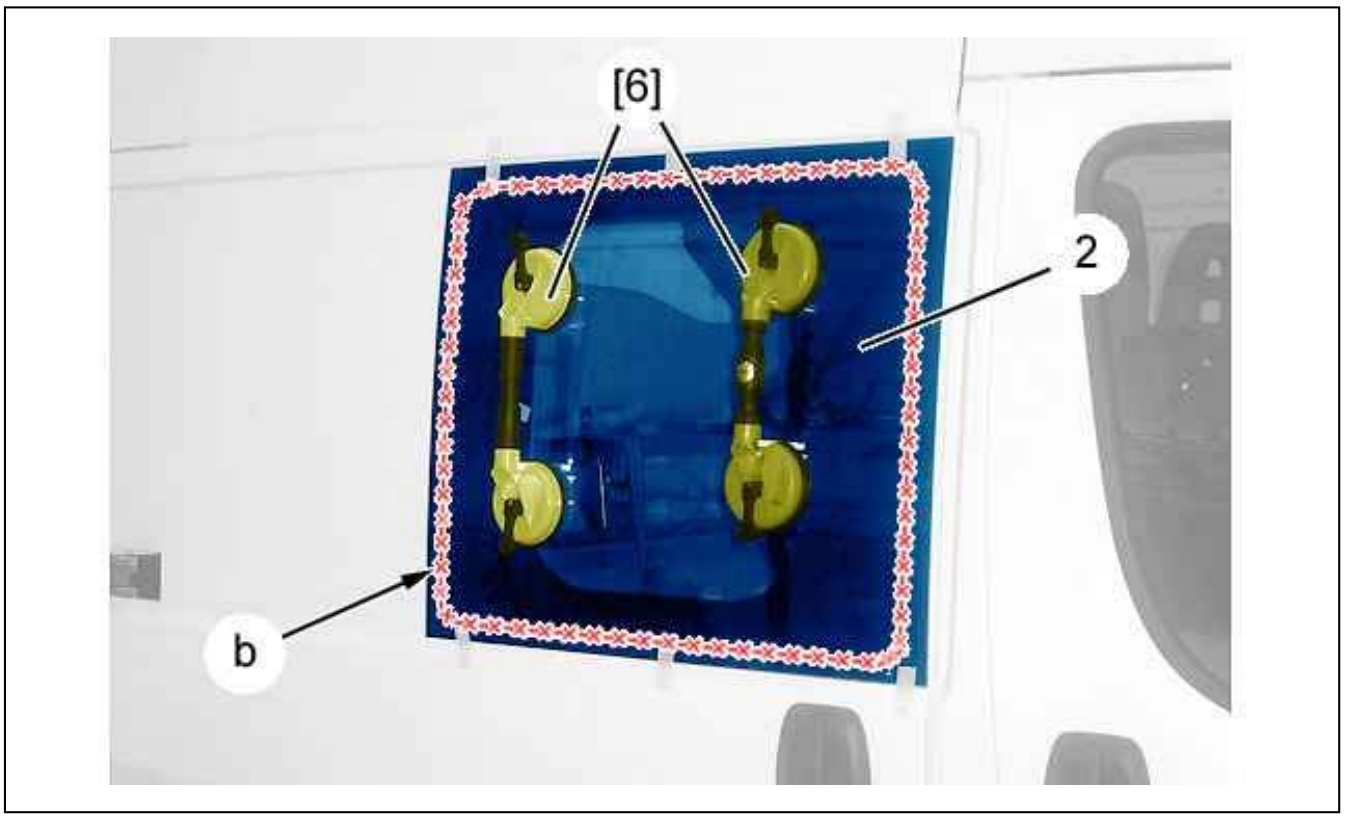

Figure : C4CM2FED

Position : The double articulated suction pads [6].
Two people are required to perform the following operation.
Cut the sealing adhesive (as "b").

N.B. : At the slightest resistance of the wire while cutting, slacken it and assist it in passing the obstacle (Suppor shims, excessive thickness of the bead of adhesive or join between panels).

Remove : The sliding side door window (2) ; Using the double hinged suction cups [6].

3. Cleaning

3.1. Preparation : Side sliding door window

Reusing the sliding side door window :

- Fit the electric knife [2] with the blade [3]
- Remove the adhesive sealing bead
- Remove any dust using a clean cloth
- Only apply the primer to the zones laid bare

Fitting a new sliding side door fixed window :

- Degrease the edge of the glass with the degreaser
- Apply the glass primer provided in the bonding kit (Reference "A3")

N.B. : Only apply the primer to the zones laid bare.

3.2. Preparation of the aperture

On the remains of the bead of sealing adhesive :

- Fit the electric knife [2] with the blade [3]
- Remove the adhesive sealing bead
- Remove any dust using a clean cloth

On the new component :

- Degrease the aperture
- Apply the metal primer provided in the bonding kit (Reference "A3")
- Allow to dry for 10 mn

4. Refitting

4.1. Reusing the sliding side door window

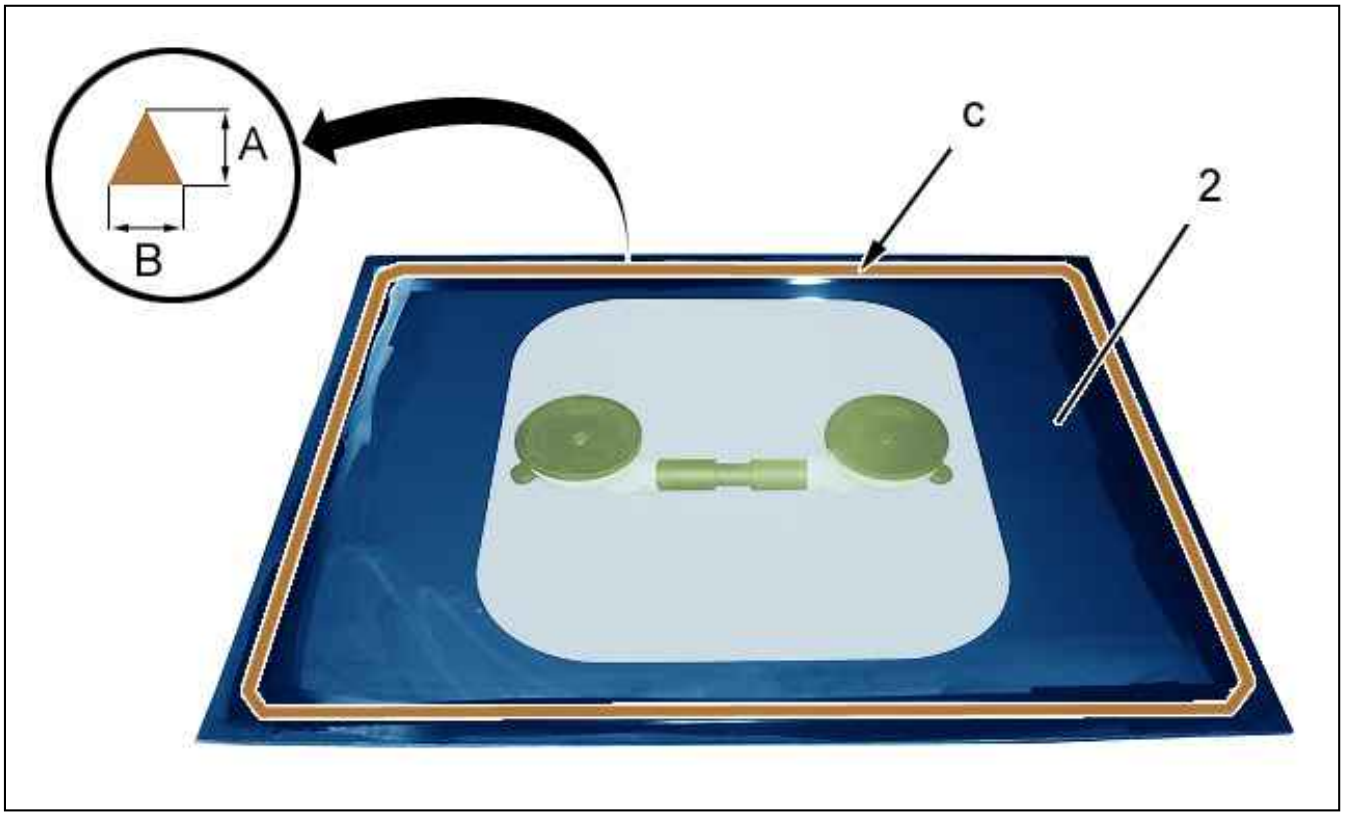

Figure : C5CM065D

"A" = 12 mm .
"B" = 8 mm .
Cut the nozzle in triangular section to obtain a bead of sealing adhesive "B" wide and "A" deep.

ESSENTIAL : Always replace : The faulty seals.

Apply a bead of sealing adhesive to the periphery of the sliding side door window (2) (as "c") ; Using the tools [4] or [5].

ESSENTIAL : If a two-pack product is used : The time between starting to extrude the sealing adhesive and fitting the window on the vehicle must not exceed 5 minutes.

Refit : The sliding side door window :

- Using the double hinged suction cups [6]
- Using adhesive tapes (2)

Press gently on the periphery of the sliding side door (3) fixed window .
Clean the sliding side door fixed window and its periphery .

4.2. Fitting a new sliding side door fixed window

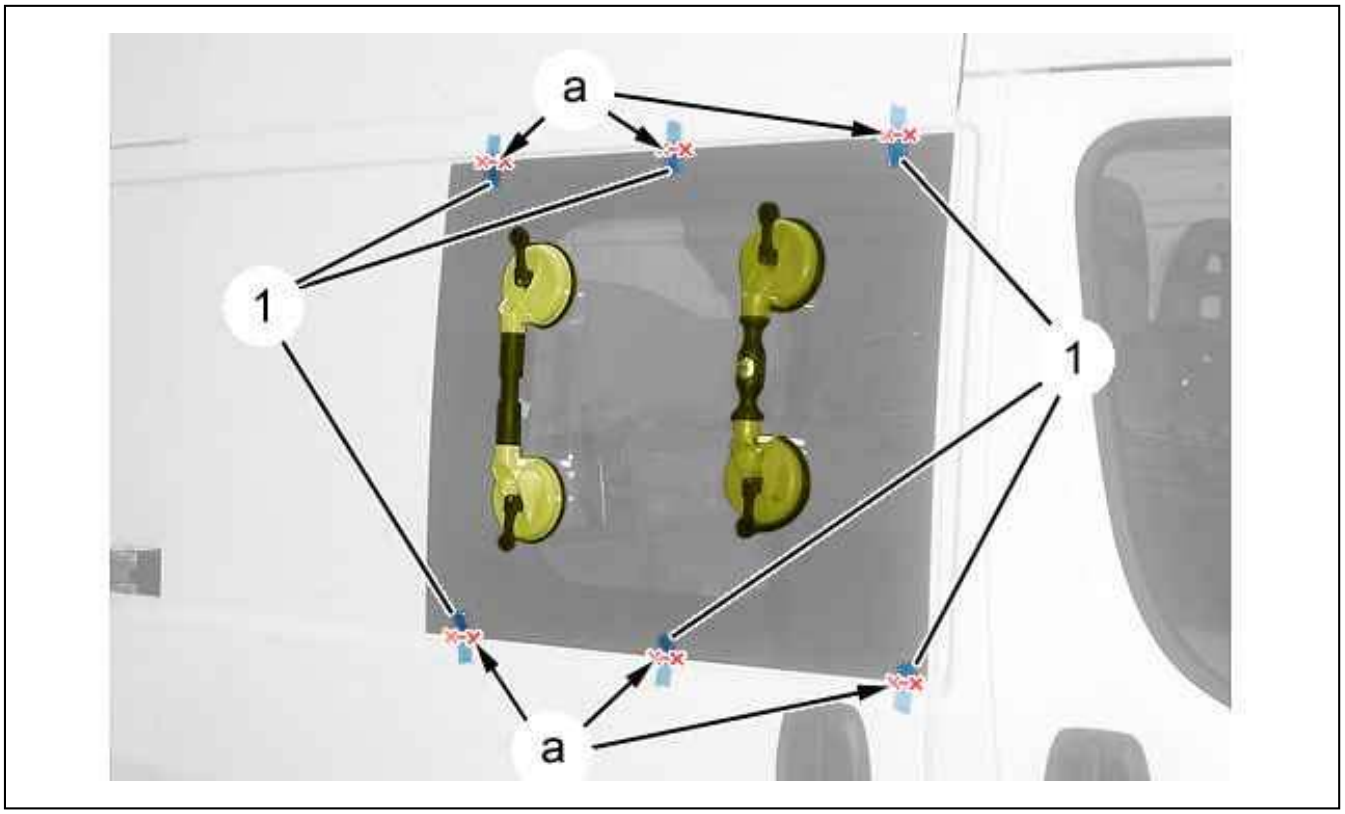

Figure : C4CM2FFD

Test fit the sliding side door (2) window.
Position the adhesive strips (1).
Cut the tape (as "a").
Remove : The sliding side door window (2).
Apply a bead of sealing adhesive to the periphery of the sliding side door (2) window (as "c") ; Using the tools [4] or [5].

ESSENTIAL : If a two-pack product is used : The time between starting to extrude the sealing adhesive and fitting the window on the vehicle must not exceed 5 minutes.

Refit : The sliding side door window :

- Using the double hinged suction cups [6]
- Using adhesive tapes (2)

Press gently on the periphery of the sliding side door (3) fixed window .
Clean the sliding side door fixed window and its periphery .

ESSENTIAL : Observe the vehicle immobilisation time following fitting of the windscreen recommended by the suppliers of the products used.

Refit : The wind-down (Proceed in the reverse order to removal).
Continue the fitting operations in the reverse order to removal.

Check the sealing of the sliding side door fixed window (2).
Clean the sliding side door fixed window and its periphery .

REMOVING - REFITTING : DOOR APERTURE SEALS

ESSENTIAL : Observe the safety and cleanliness recommendations .

1. Removing

1.1. The front door aperture seal

Remove :

- The front pillar trim
- The door sill trim
- The B/C post trim

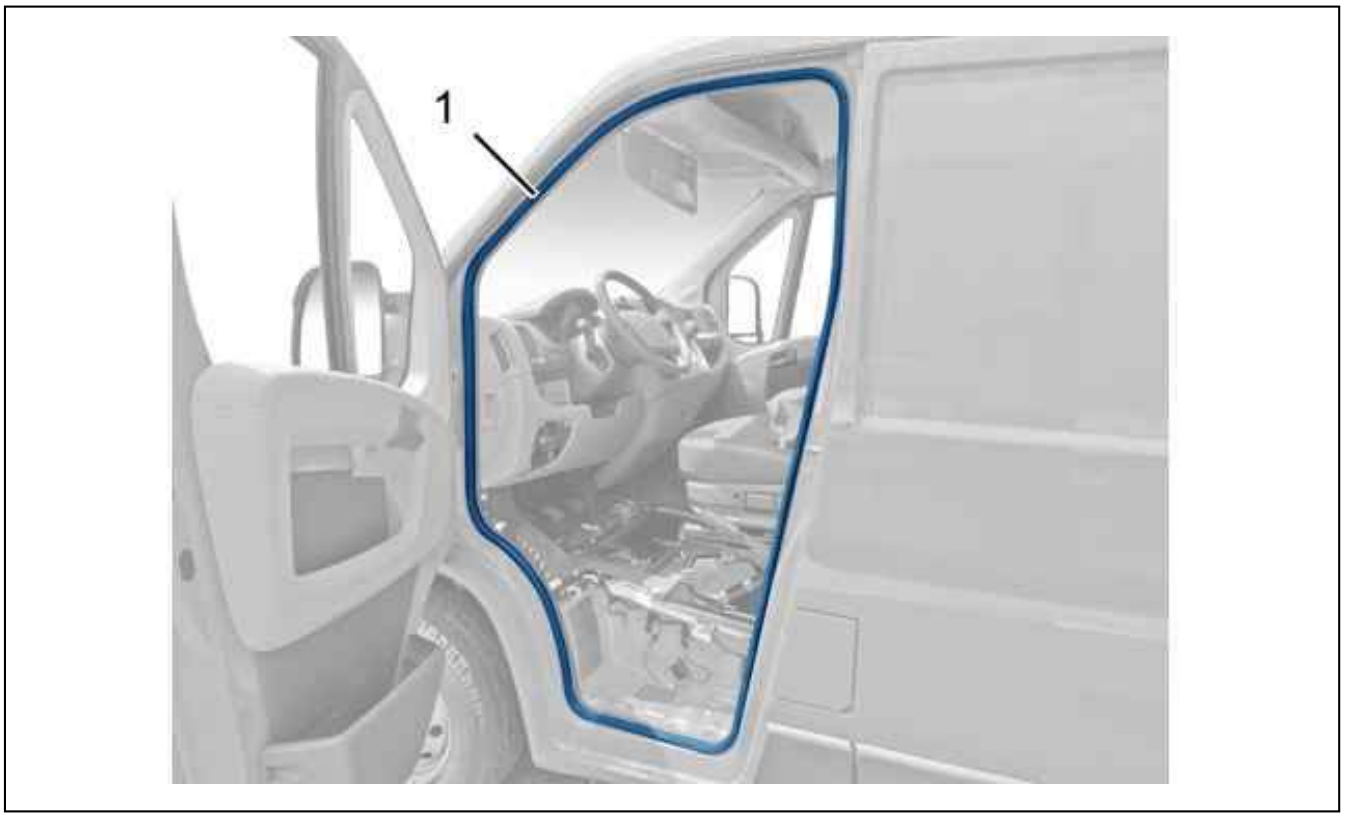

Figure : C4CG0KPD

Remove the front door aperture seal (1).

1.2. Sliding side door aperture seal



Figure : C4CG0KQD

Remove the sliding side door aperture seal (2).

1.3. Rear door entry seal

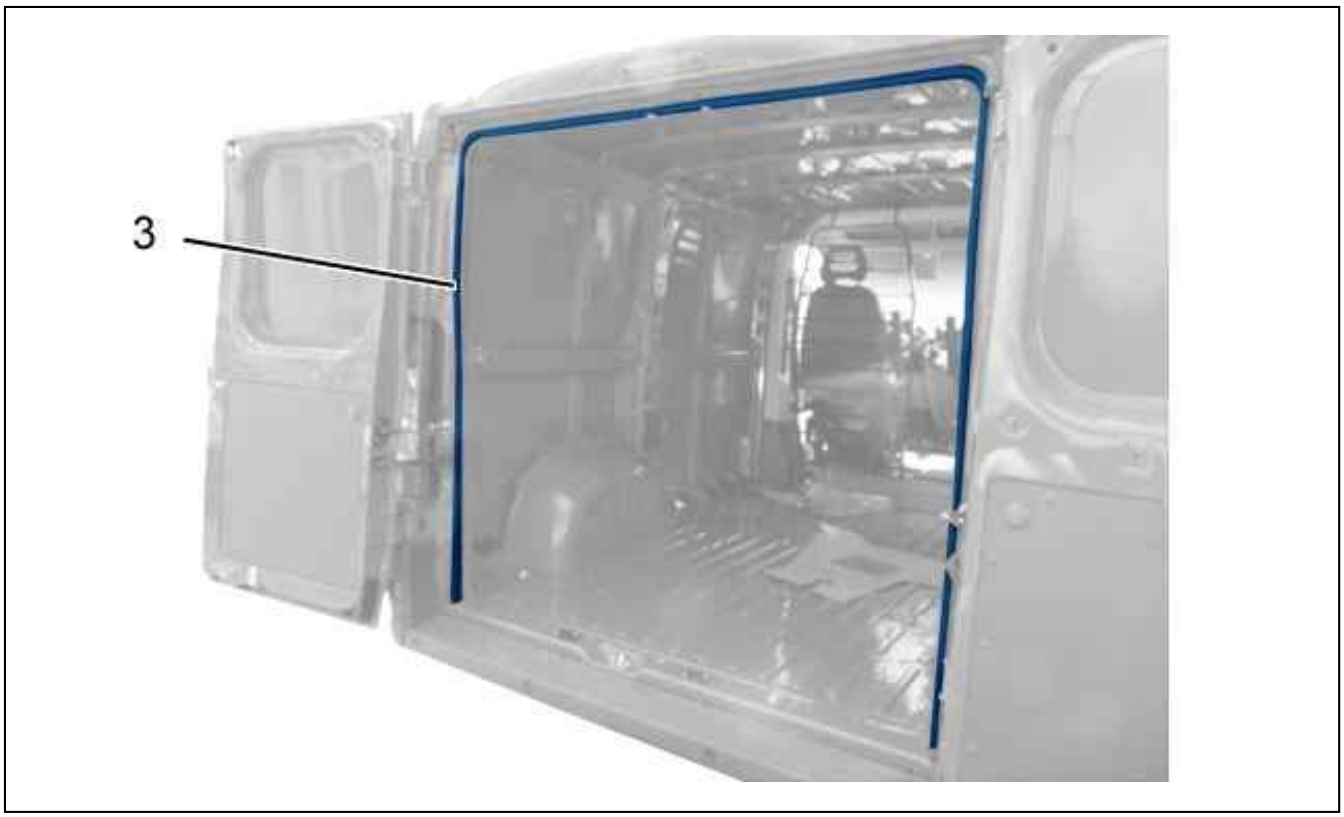

Figure : C4CG0KRD

Remove the rear door aperture seal (3).

2. Refitting

2.1. The front door aperture seal

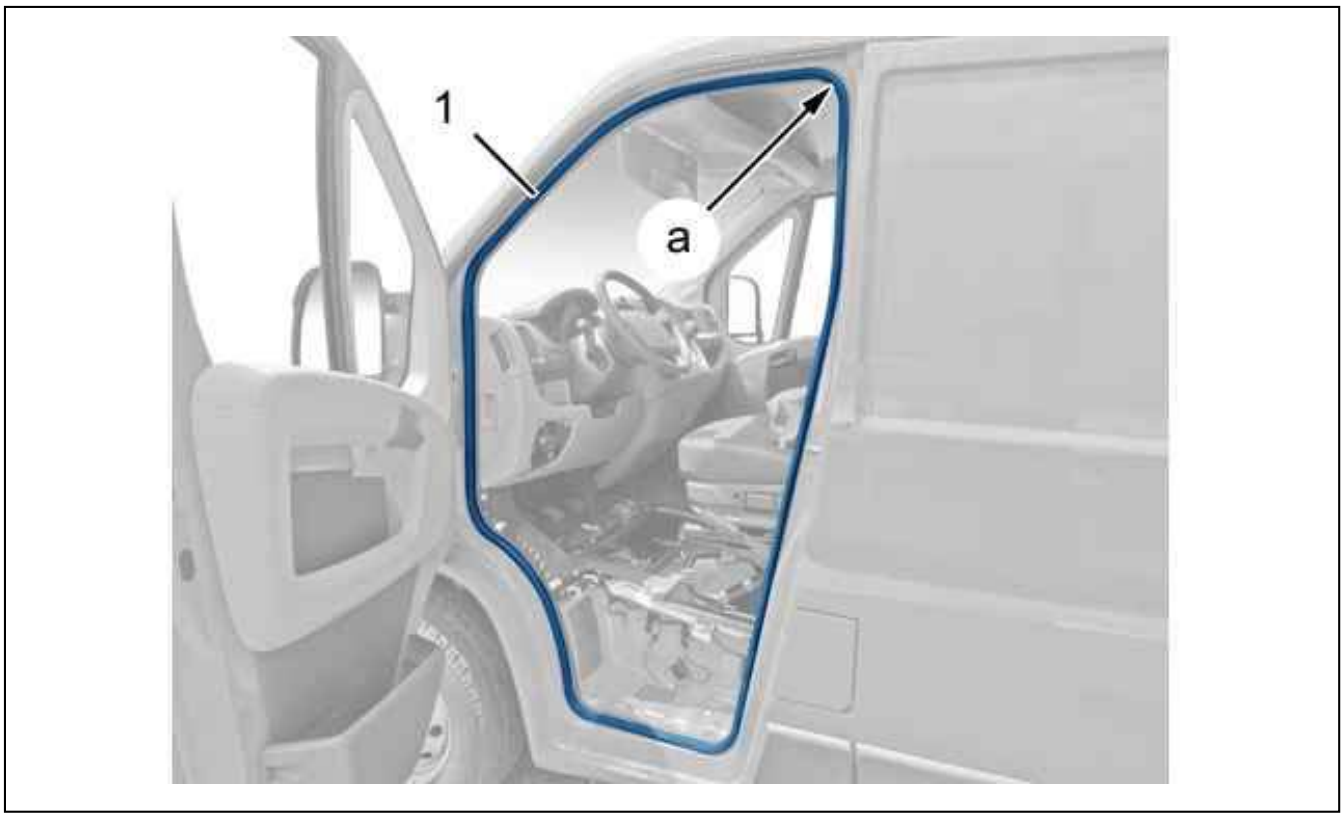

Figure : C4CG0KSD

Re-fitting method : The front door aperture seal (1) :

- Start in the corner (at "a")
- Re-seat the front door aperture seal (1) on the front door frame flange ; Using a plastic mallet

2.2. Sliding side door aperture seal

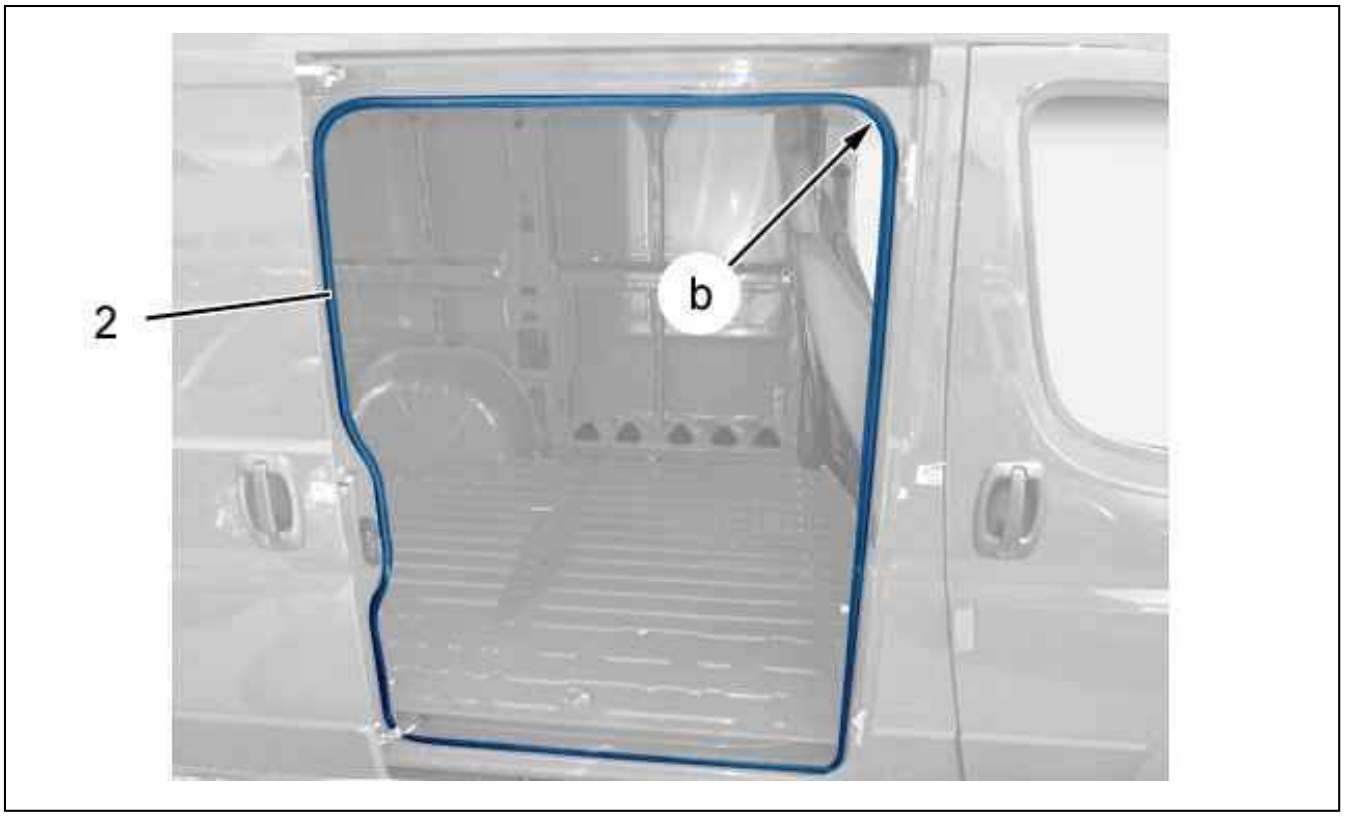

Figure : C4CG0KTD

Re-fitting method : Sliding side door aperture seal (2) :

- Start in the corner (at "b")
- Re-seat the sliding side door aperture seal (2) on the sliding side door frame flange ; Using a plastic mallet

2.3. Rear door entry seal

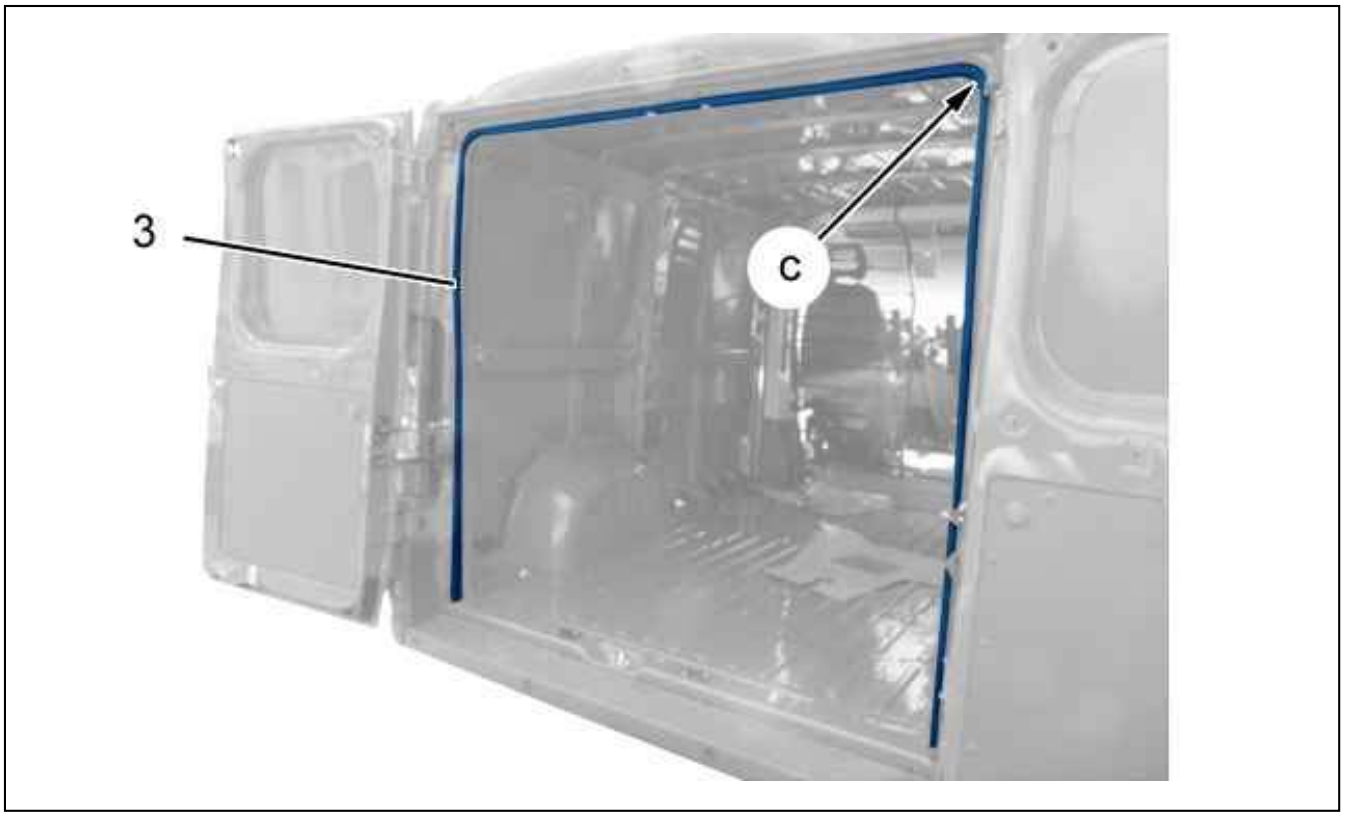

Figure : C4CG0KUD

Re-fitting method : Rear door entry seal (3) :

- Start in the corner (at "c")
- Re-seat the rear door aperture seal (3) on the rear door frame flange ; Using a plastic mallet

2.4. Common operations

Verify :

- The closing of the doors
- The sealing of the door seals

REPLACEMENT : LOWER RH INTERMEDIATE CLOSING PLATE

ESSENTIAL : All of the stripped surfaces must be protected by means of the approved electrolytic rezincing process (see the relevant operation).

ESSENTIAL : : Observe the elementary rules of hygiene and safety (wear a face mask to protect against fumes and vapour - work in a well ventilated space).

1. Additional operations

Disconnect the battery.
Removing - Refitting :

- Guide seal
- The side sliding door
- Lower rail of the sliding side door
- Door stop

Release the wiring harnesses.

2. Identification of the replacement parts



Figure : C4CP1P3D

Figure 1.
Lower RH intermediate closing plate.

3. Replacement part preparation

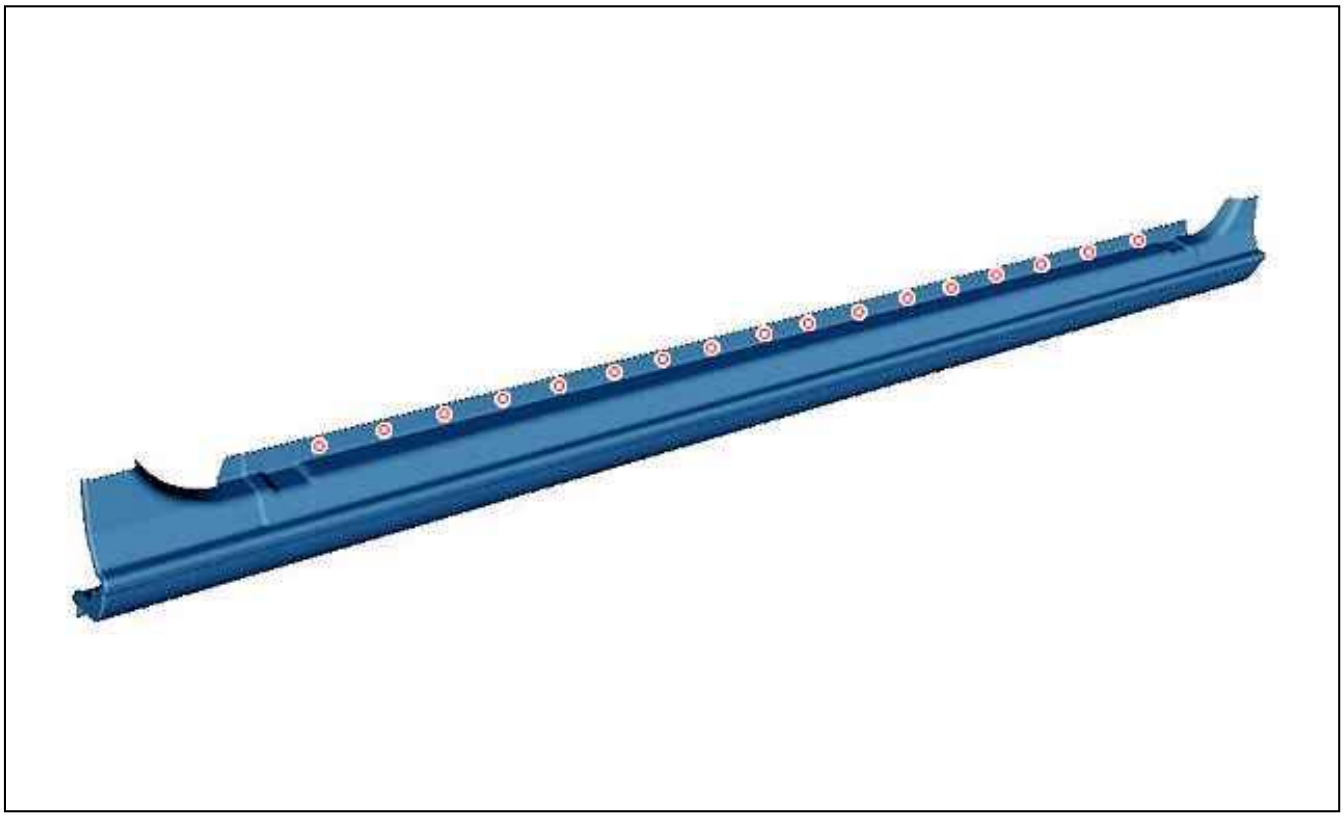

Figure : C4CP1P4D

Figure 2.
Lower RH intermediate closing plate.
Mark then drill to Ø 6 mm for later plug welding (17 holes).
Prepare the mating edges .

4. Cutting out

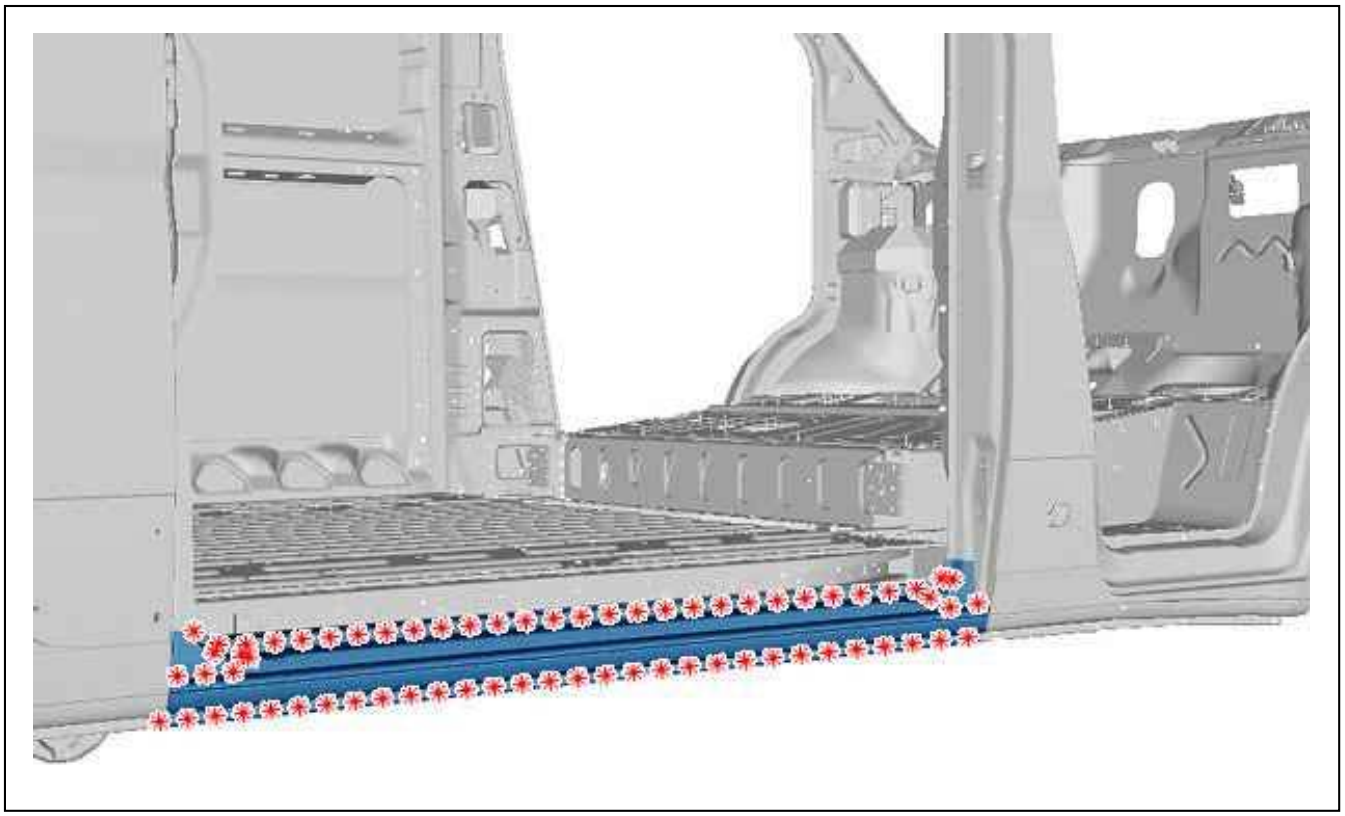

Figure : C4CP1P5D

Figure 3.
Cut out the spot welds .
Remove the lower RH intermediate closing plate.

5. Bodywork cleaning and preparation

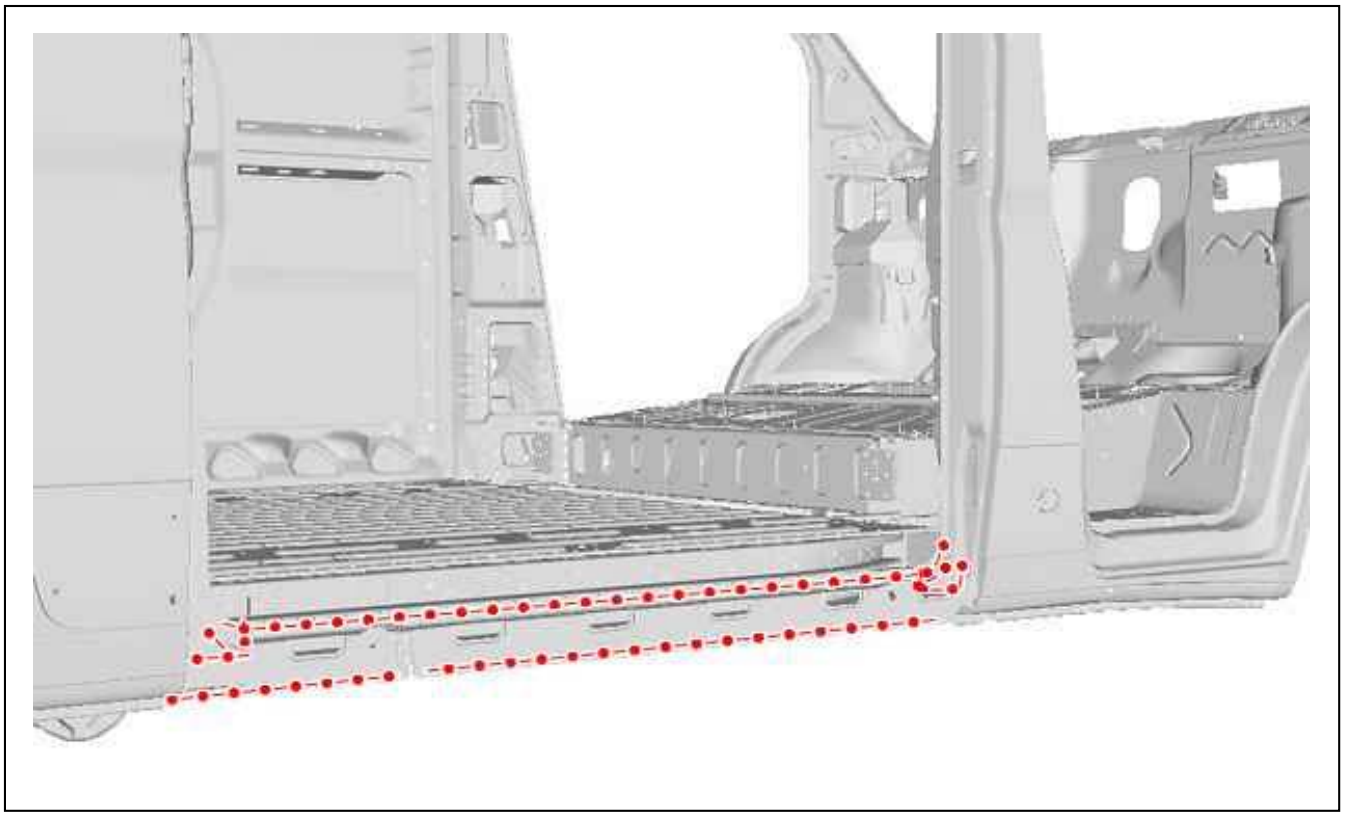

Figure : C4CP1P6D

Figure 4.
Prepare the mating edges .
Align the mating edges and protect them with a weldable primer.

6. Adjustment

Present the component for adjustment.
Check the fits and clearances (see the relevant operation).

7. Welding

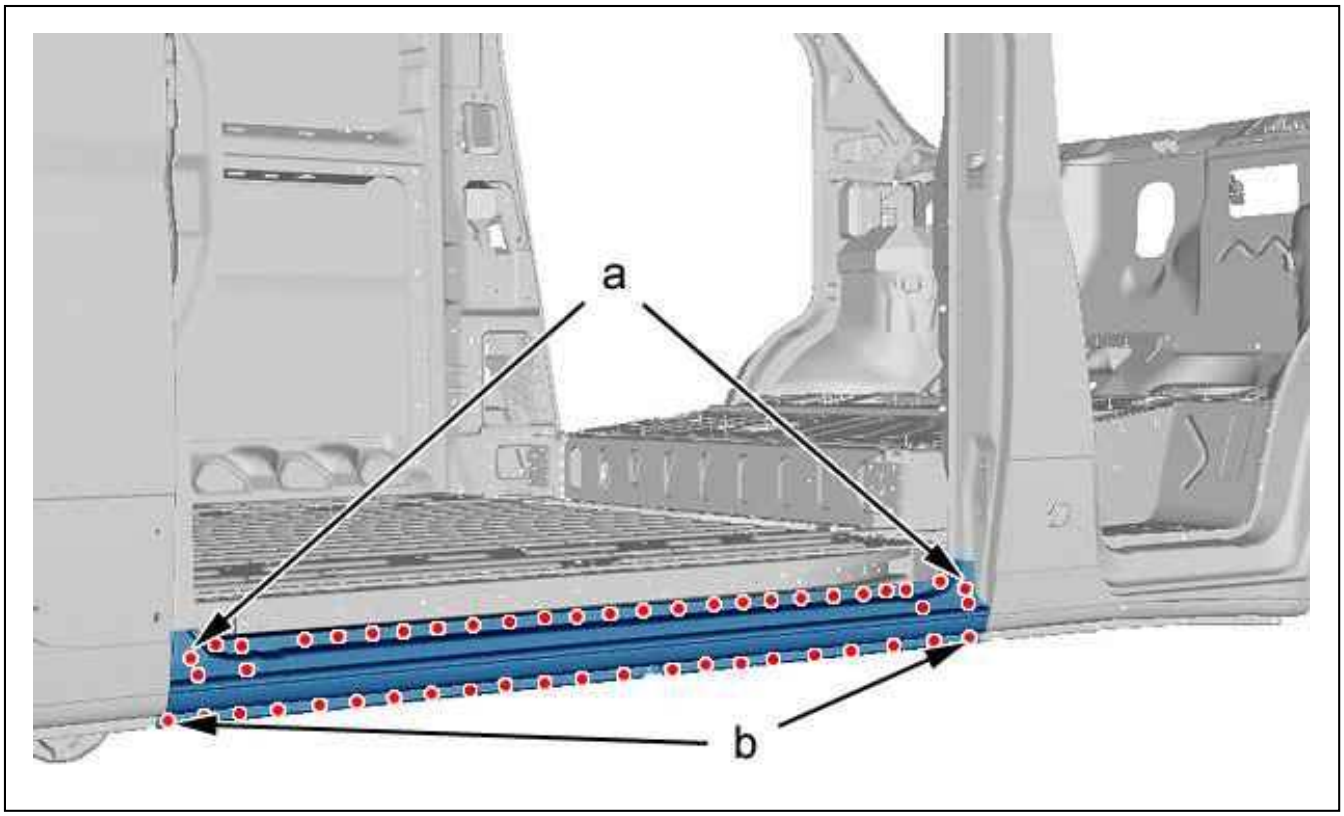

Figure : C4CP1P7D

Figure 5.
Weld with MIG or MAG spot welds (following "a"). .
Grind the spot welds.
Weld with electric spot welds (following "b").

8. Sealing

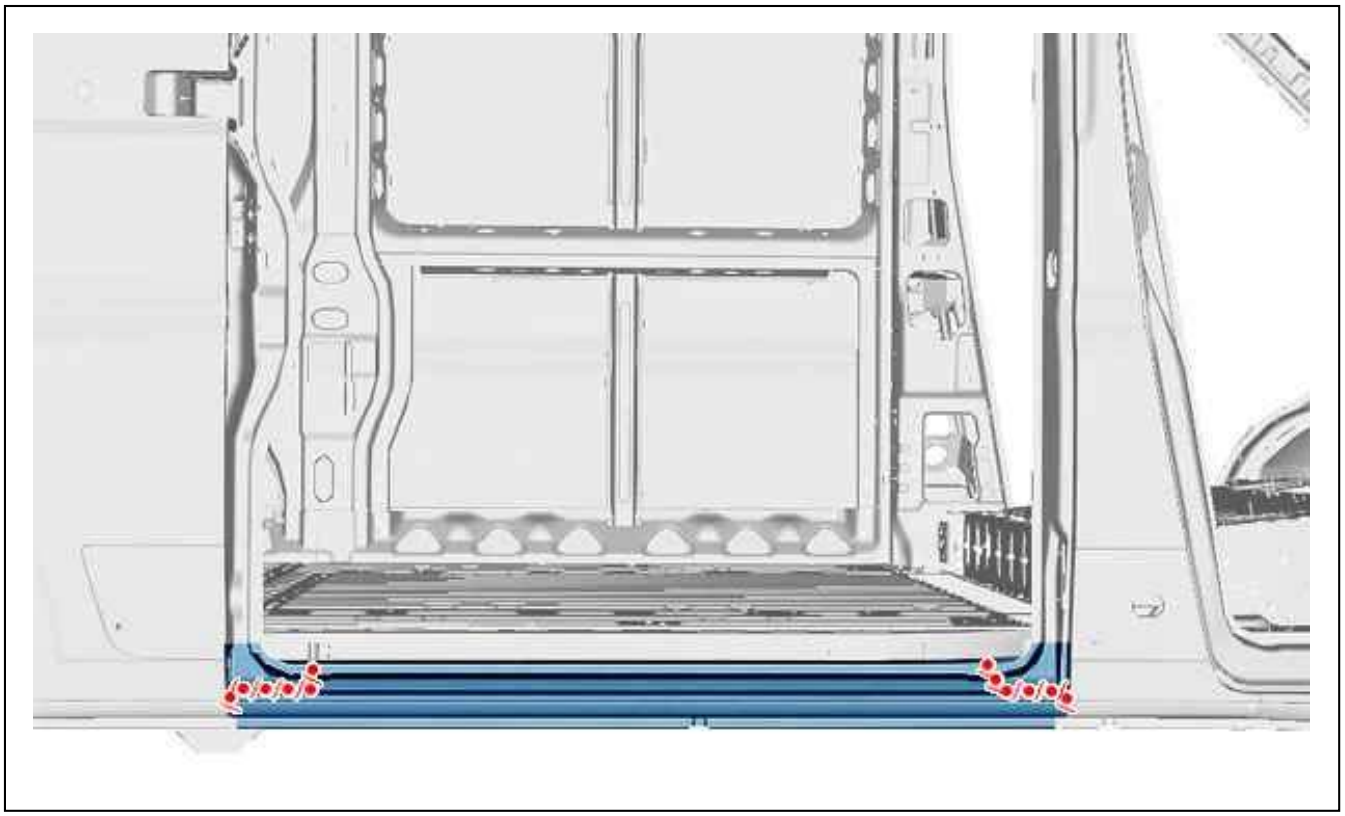

Figure : C4CP1P8D

Figure 6.
Apply a phosphate-print layer on the zone laid bare.
Apply a sealing mastic of type " A4" (see the relevant operation).

9. Protection

Paint then spray into the hollow sections, product index C5, in the repair zone (see the relevant operation).
Apply an anti-chip layer (see the relevant operation).

10. Reinitialisation

Reconnect the battery.

ESSENTIAL : Perform the operations to be carried out following reconnection of the battery.

REPLACEMENT : DOOR FRAME UPPER CLOSING PANEL

ESSENTIAL : All of the stripped surfaces must be protected by means of the approved electrolytic rezincing process (see the relevant operation).

ESSENTIAL : Observe the elementary rules of hygiene and safety (wear a face mask to protect against fumes and vapour - work in a well ventilated space).

1. Additional operations

Disconnect the battery.
Remove the front roof panel (see the relevant operation).
Removing - refitting :

- Door aperture seal
- Water projection seal

Release the wiring harnesses.

2. Identification of the replacement parts



Figure : C4CP1PYD

Door frame upper closing panel.

3. Preparation of the new part



Figure : C4CP1PZD

Mark then drill to Ø 6 mm for later plug welding (7 holes).
Prepare the mating edges .



Figure : C4CP1Q0D

Mark then drill to Ø 6 mm for later plug welding (10 holes).

Prepare the mating edges .



Figure : C4CP1Q1D

Mark then drill to Ø 6 mm for later plug welding (10 holes).
Prepare the mating edges .

4. Cutting out

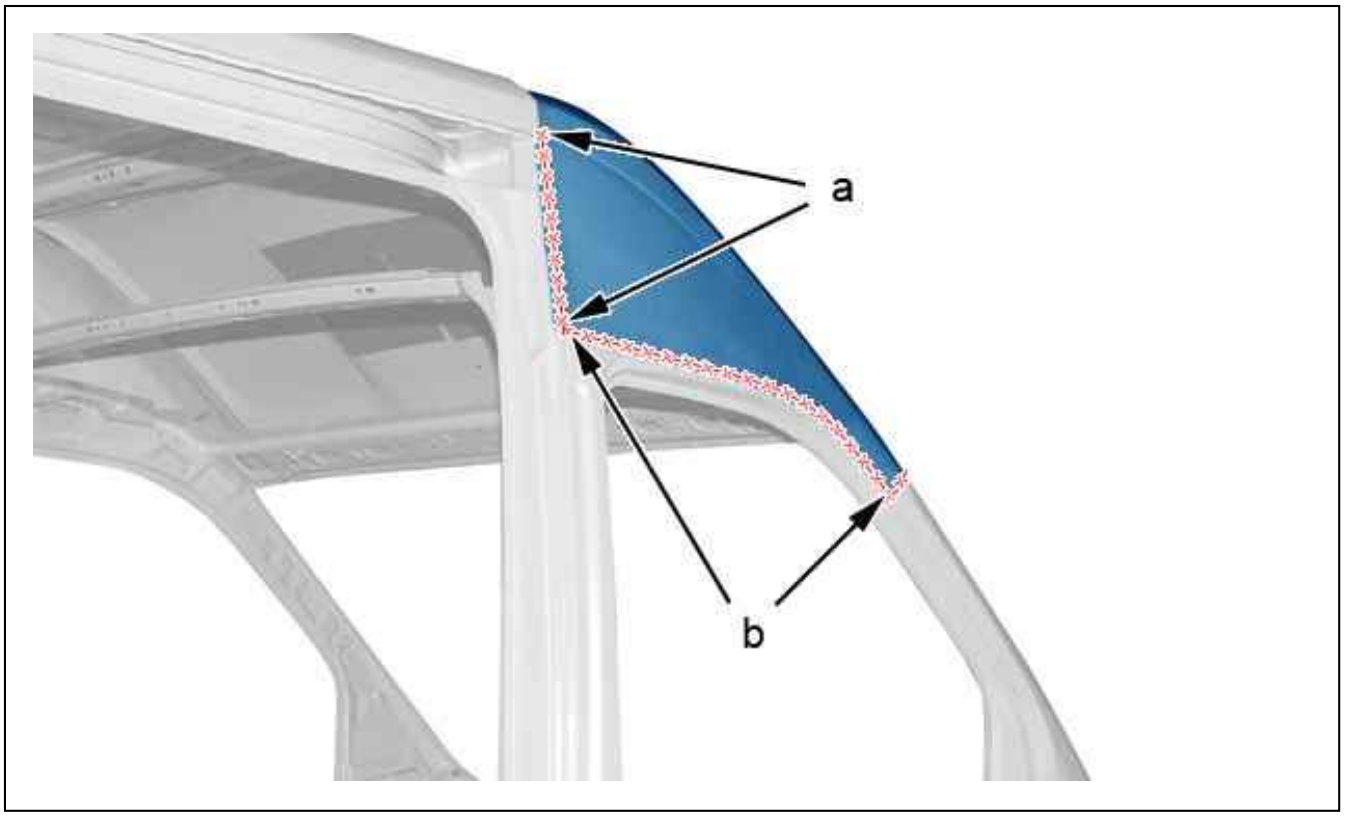

Figure : C4CP1Q2D

a=5 points ; b=10 points.
Cut out the spot welds (at "a" and "b").

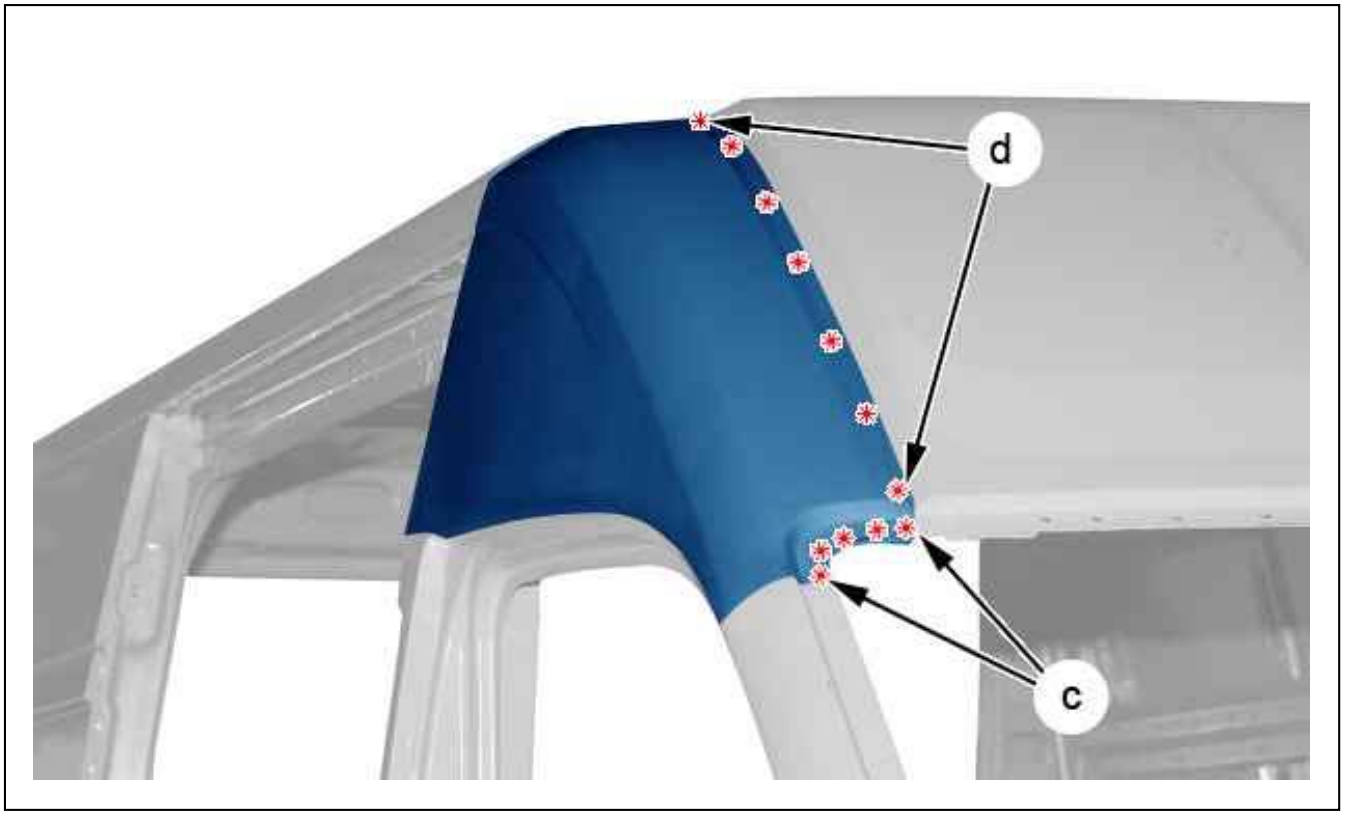

Figure : C4CP1Q3D

c=5 points ; d=7 points.

Cut :

- The spotwelds (at "c" and "d")
- The adhesive

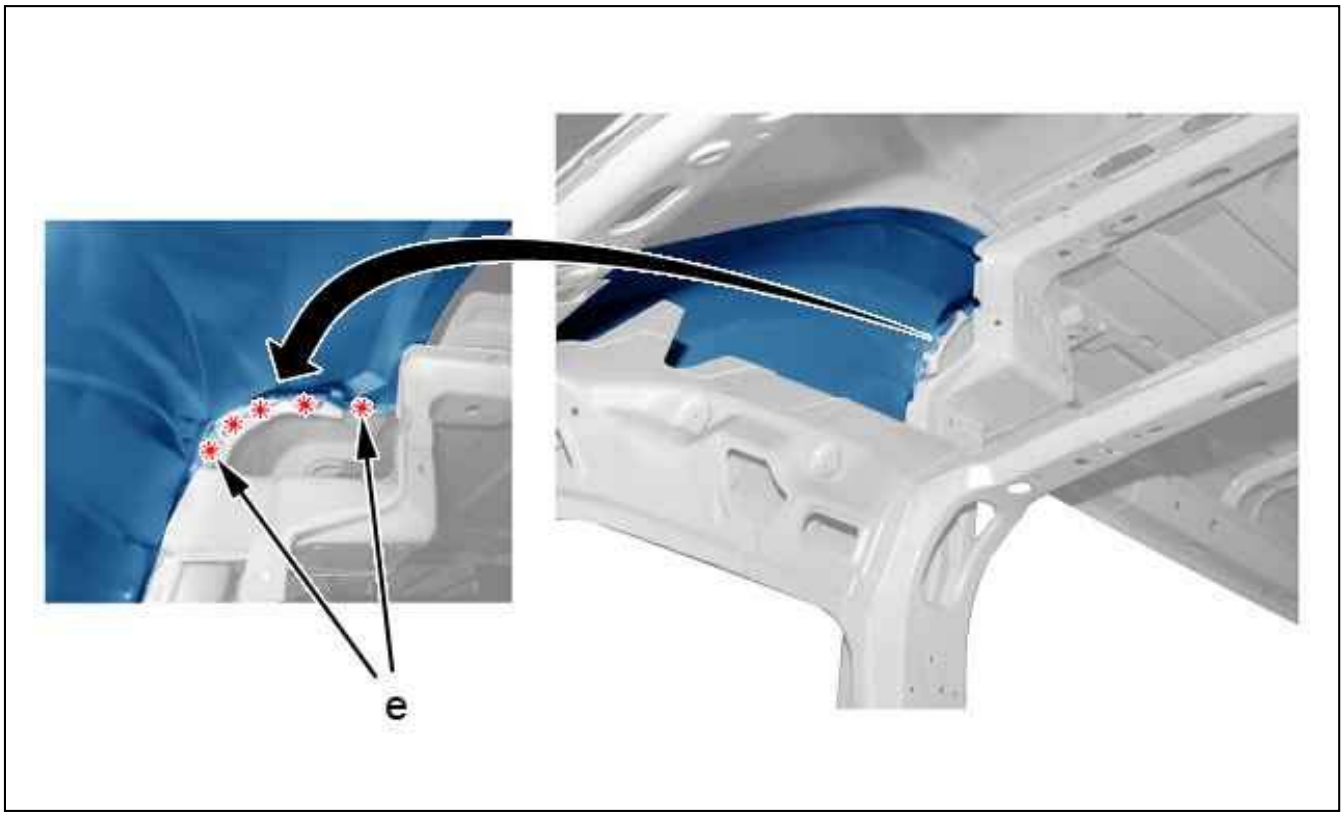

Figure : C4CP1Q4D

E = 5 points.
Cut out the spot welds (at "e").
Remove the door frame upper closing panel.

5. Bodywork cleaning and preparation

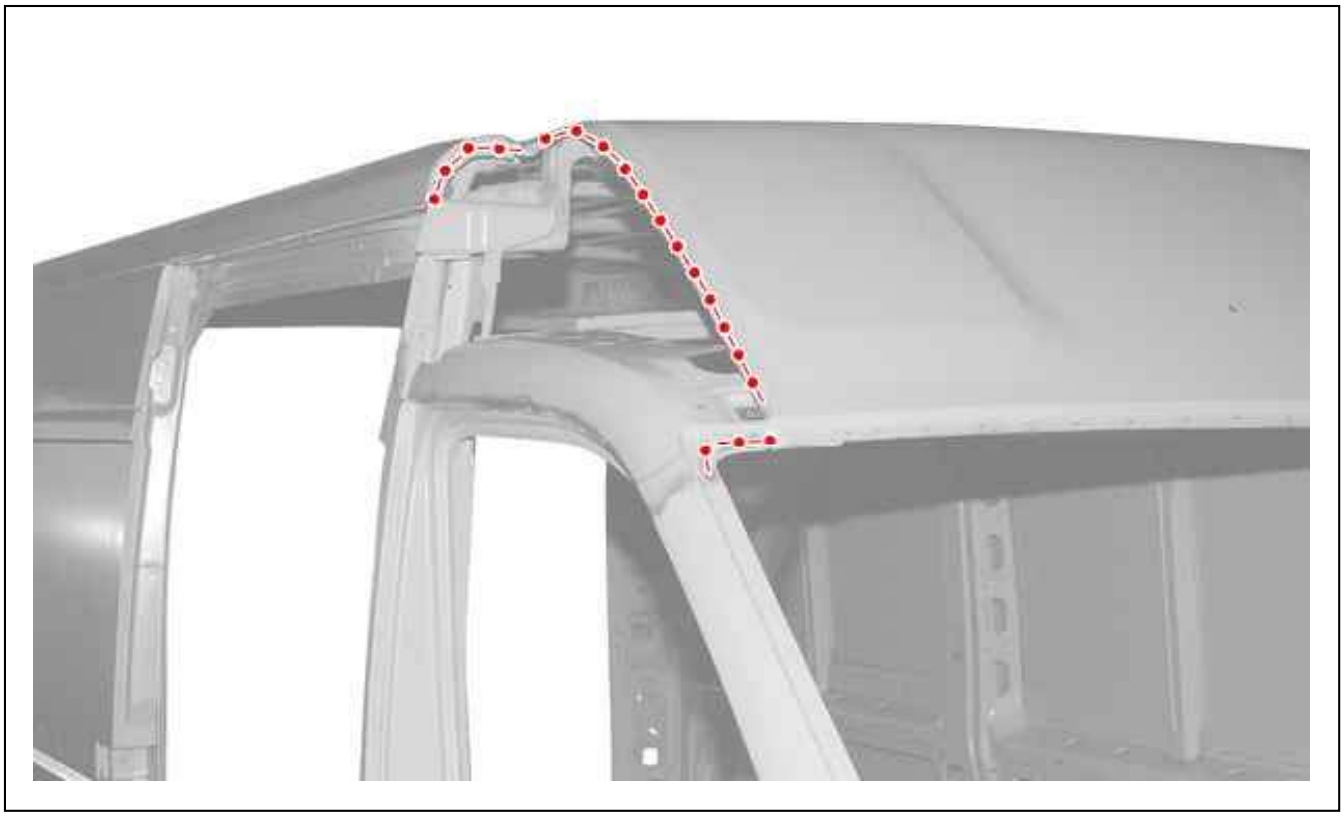

Figure : C4CP1Q5D

Prepare the mating edges .
Align the mating edges and protect them with a weldable primer.

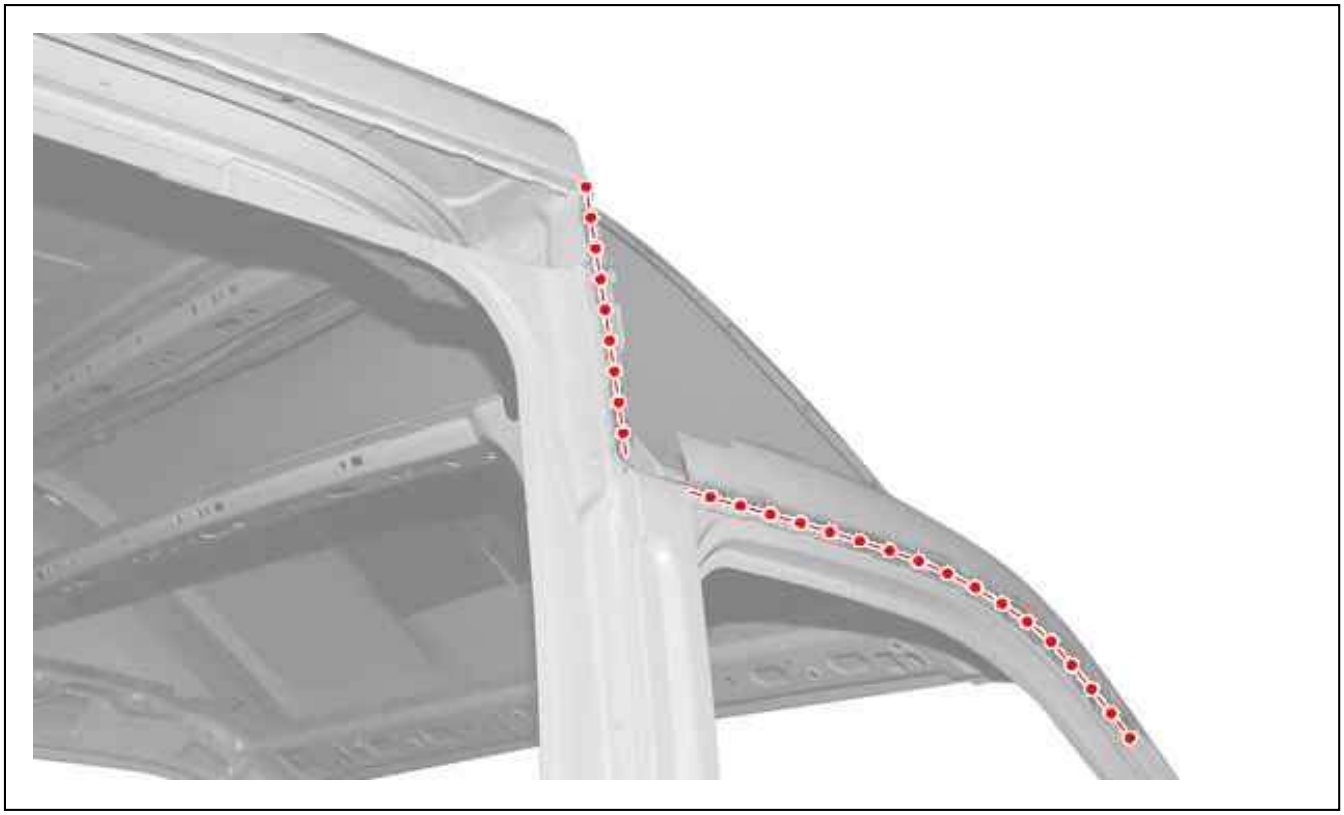

Figure : C4CP1Q6D

Prepare the mating edges .

Align the mating edges and protect them with a weldable primer.

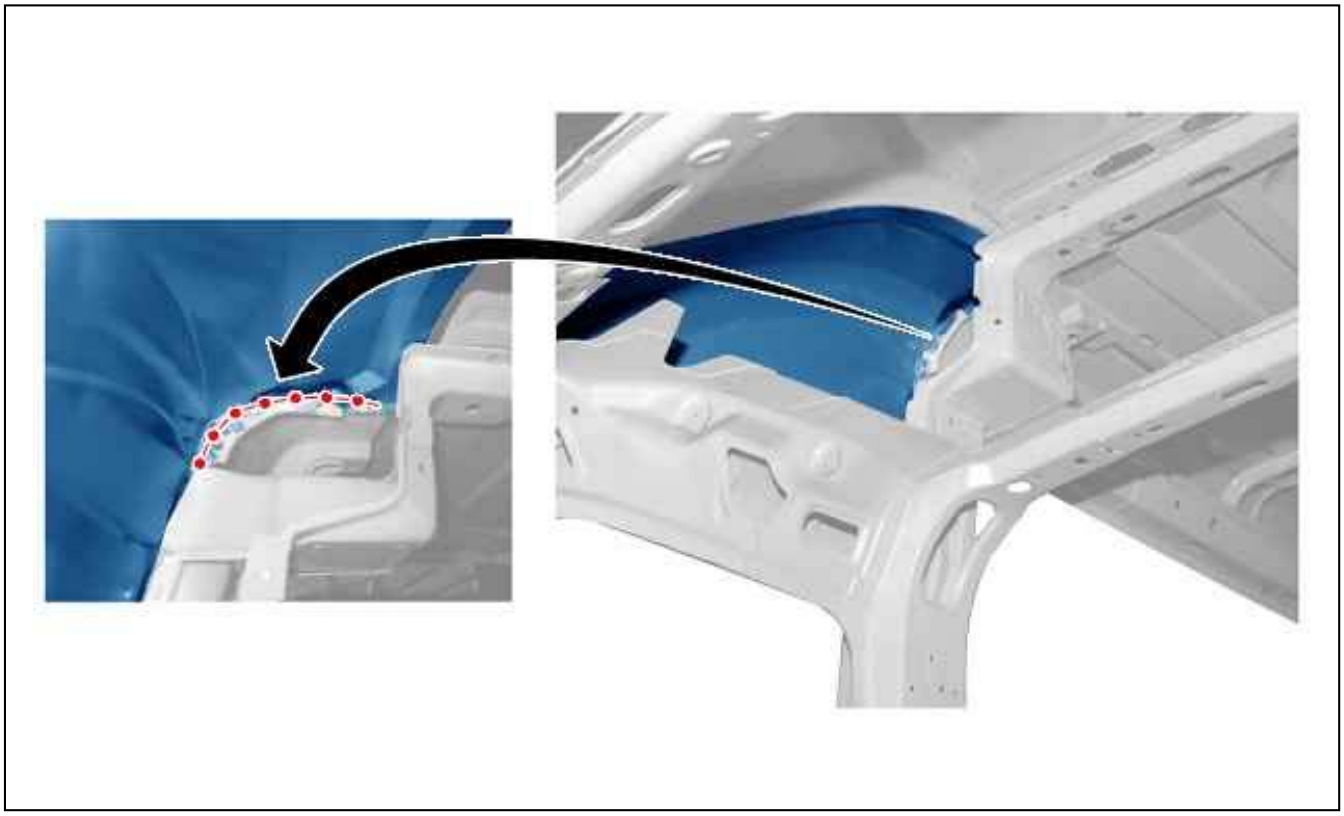

Figure : C4CP1Q7D

Prepare the mating edges .
Align the mating edges and protect them with a weldable primer.

6. Adjustment

Present the component for adjustment.
Check the fits and clearances (see the relevant operation).

7. Welding

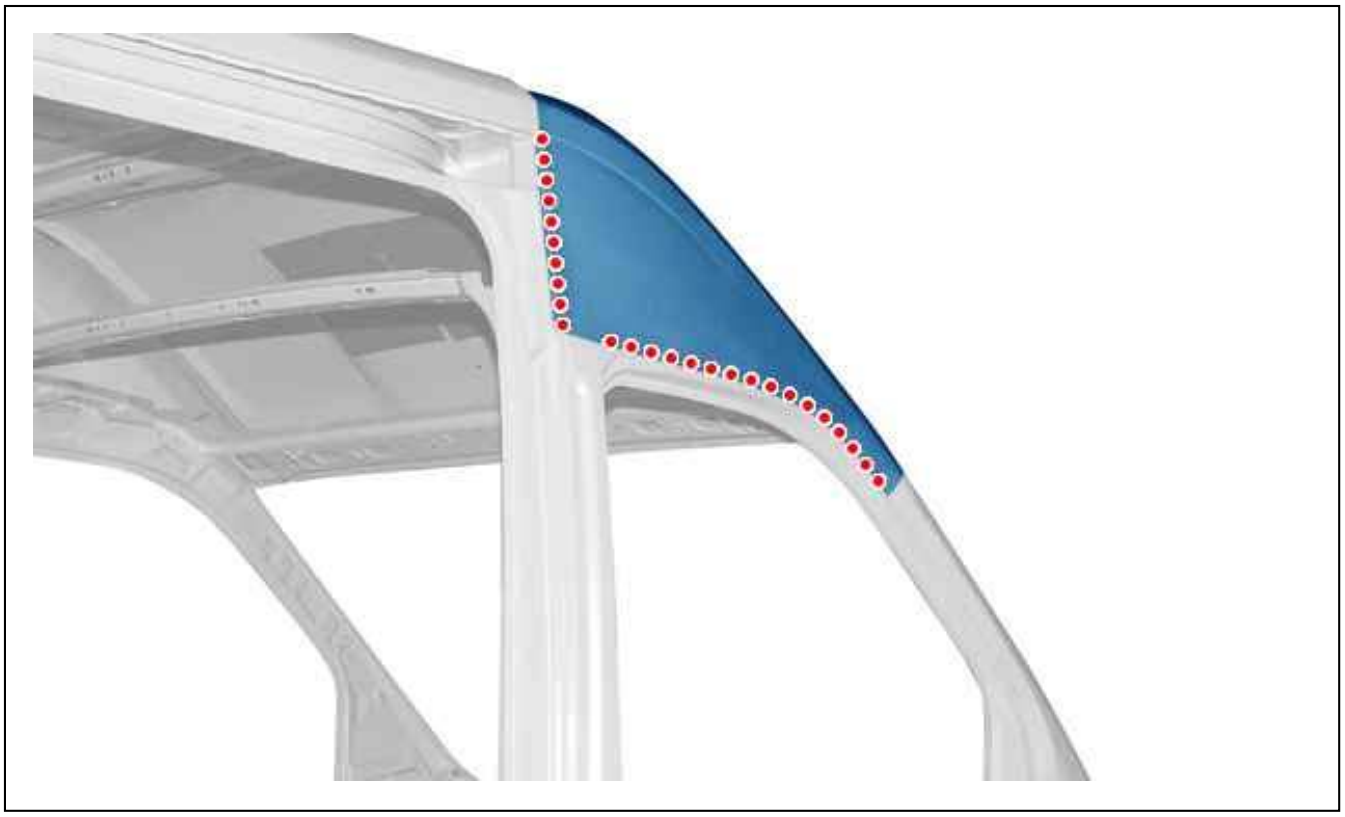

Figure : C4CP1Q8D

Weld with plug welds.
Grind the plug welds.

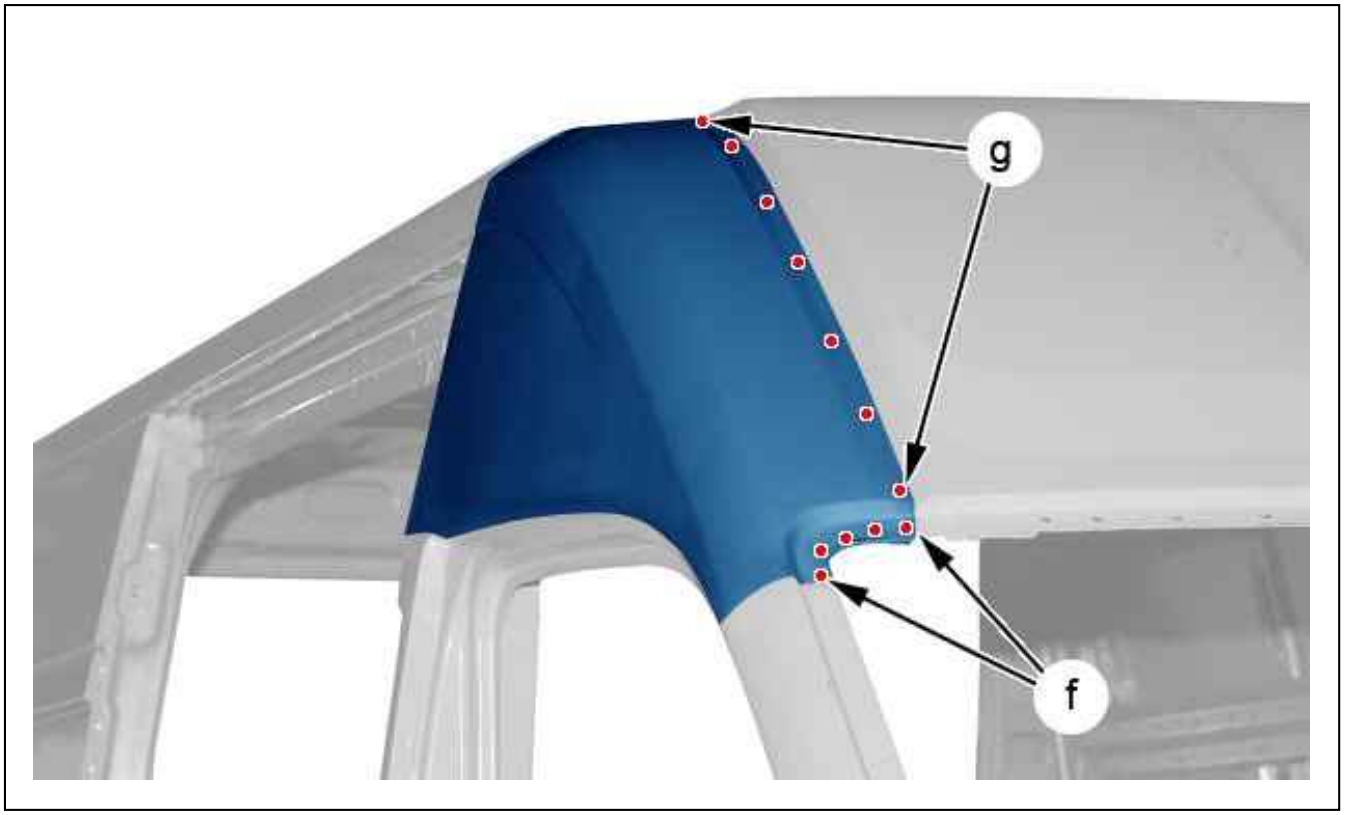

Figure : C4CP1Q9D

Weld with electric spot welds (at "f").

Weld with plug welds (at "g").
Grind the plug welds.

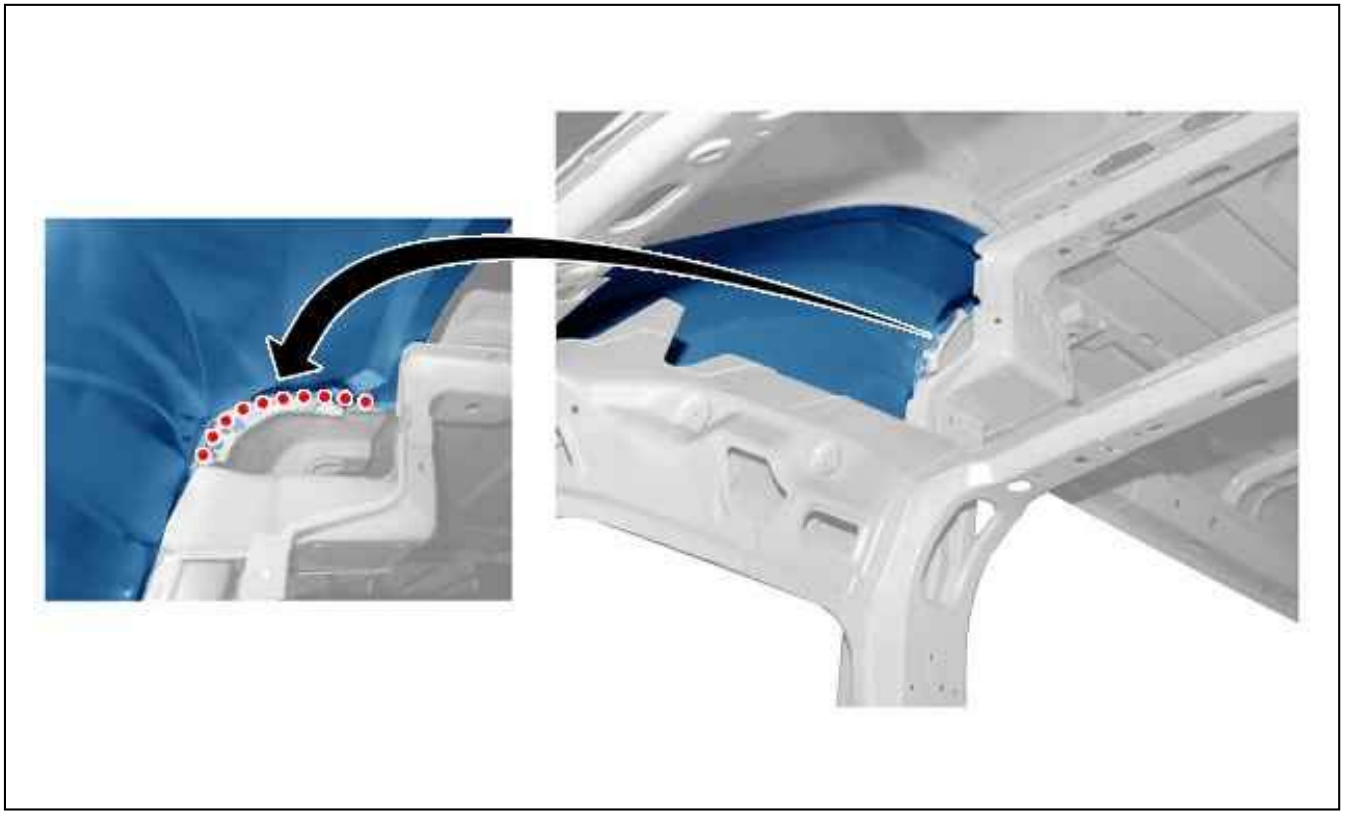

Figure : C4CP1QAD

Weld with plug welds.
Grind the plug welds.

8. Sealing

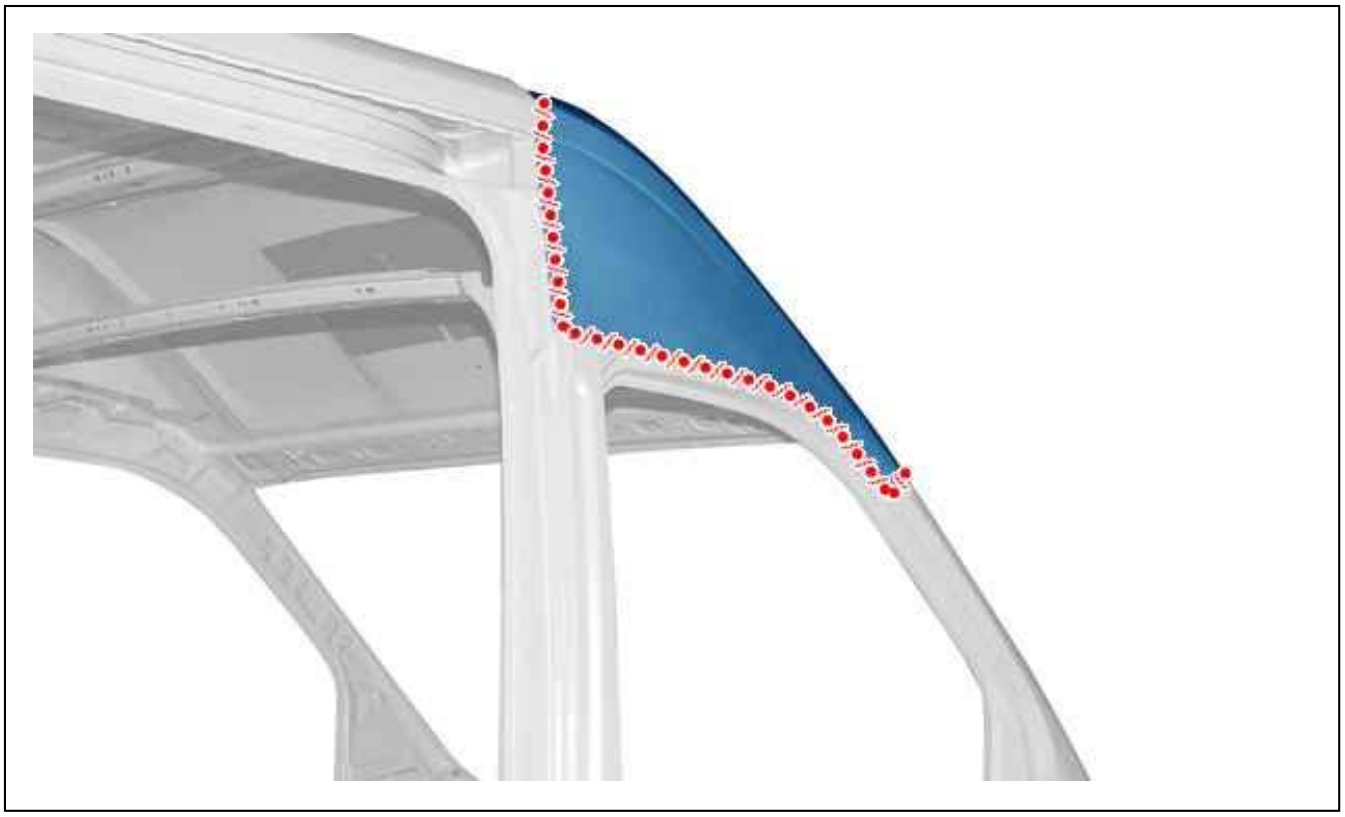

Figure : C4CP1QBD

Apply a sealing mastic of type " A1" (see the relevant operation).

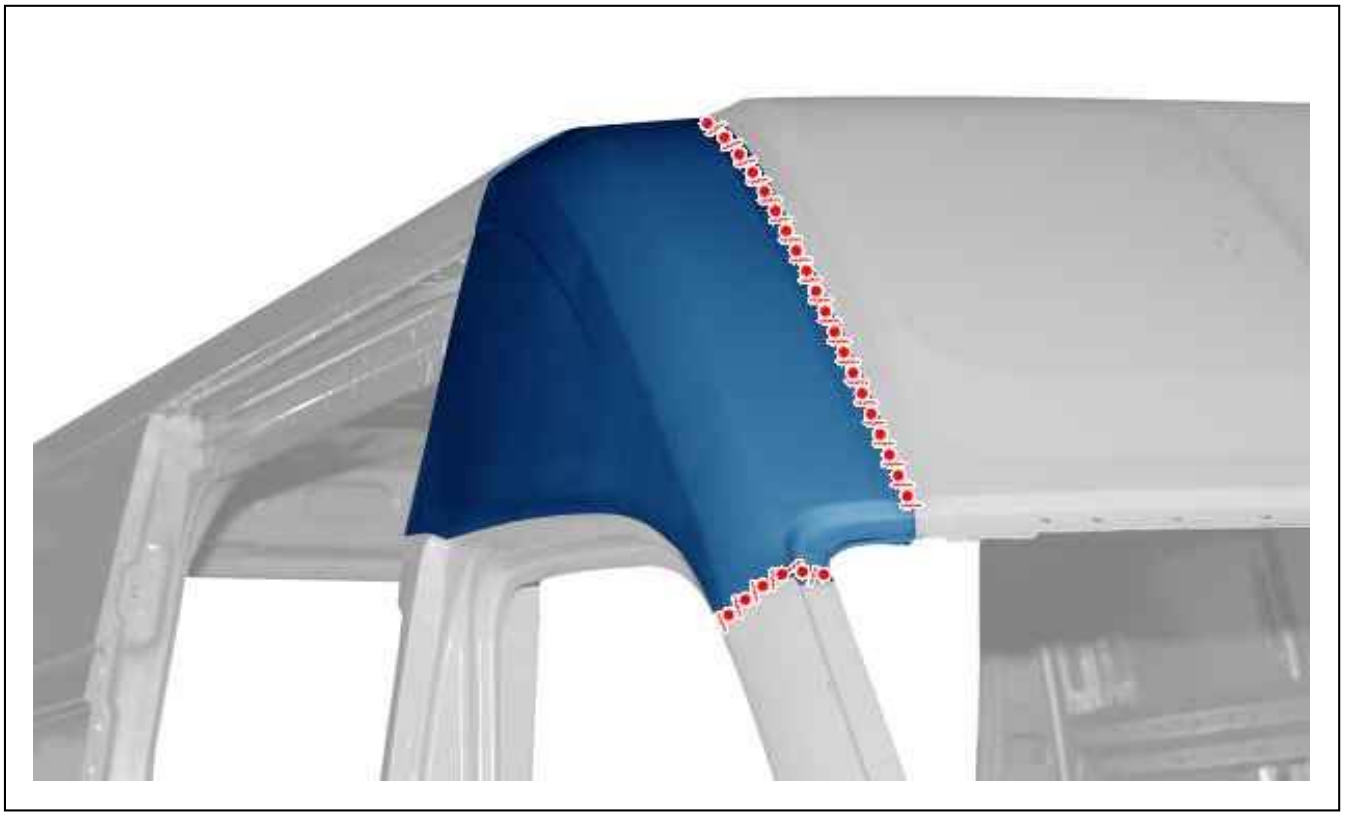

Figure : C4CP1QCD

Apply a sealing mastic of type " A1" (see the relevant operation).

9. Protection

Paint then spray into the hollow sections, product index C5, in the repair zone (see the relevant operation).

10. Reinitialisation

Reconnect the battery.

ESSENTIAL : Perform the operations to be carried out following reconnection of the battery.

REPLACEMENT : FRONT SIDE PANEL - TOP HORIZONTAL AND VERTICAL STIFFENERS

ESSENTIAL : All of the stripped surfaces must be protected by means of the approved electrolytic rezincing process (see the relevant operation).

ESSENTIAL : : Observe the elementary rules of hygiene and safety (wear a face mask to protect against fumes and vapour - work in a well ventilated space).

1. Additional operations

Disconnect the battery.
Removing - refitting : Cab partition.
Detrim-retrim :

- The front side panel lower trim
- The cabin partition trim
- The front pillar trims

Release the wiring harnesses.

2. Identification of replacement parts

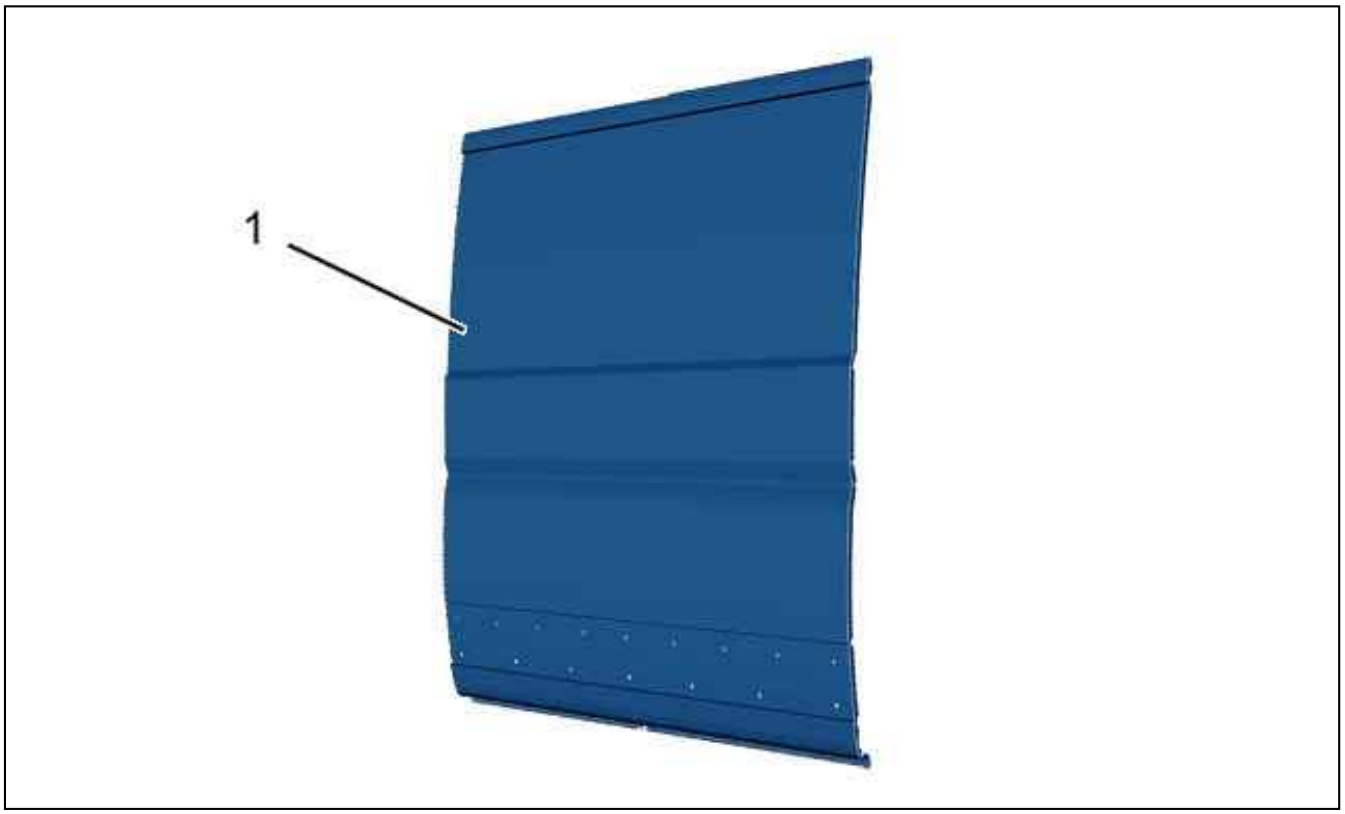

Figure : C4CP1PBD

Figure 1.
(1) Front side panel.

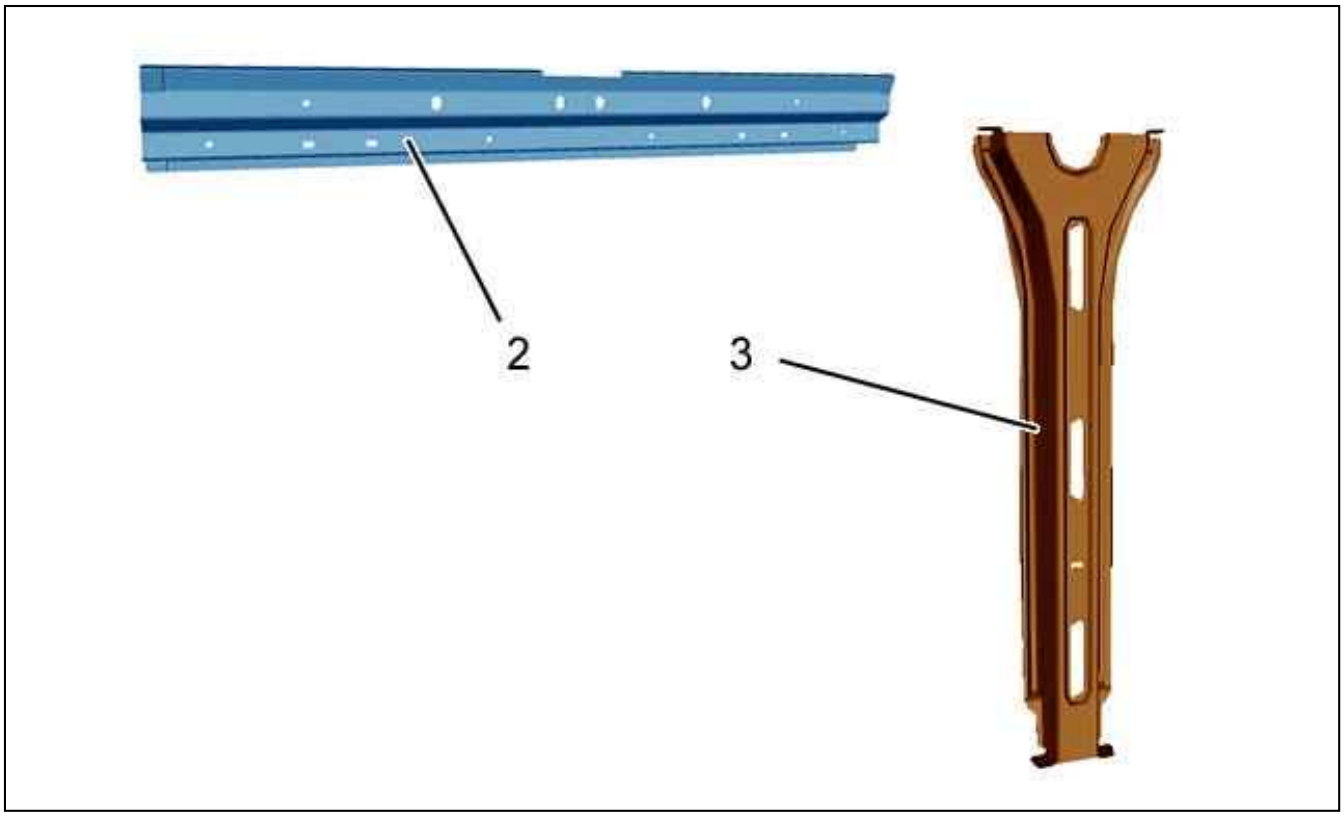

Figure : C4CP1PCD

Figure 2.
(2) Top horizontal stiffener.
(3) Top vertical stiffener.

3. Preparation of the replacement parts

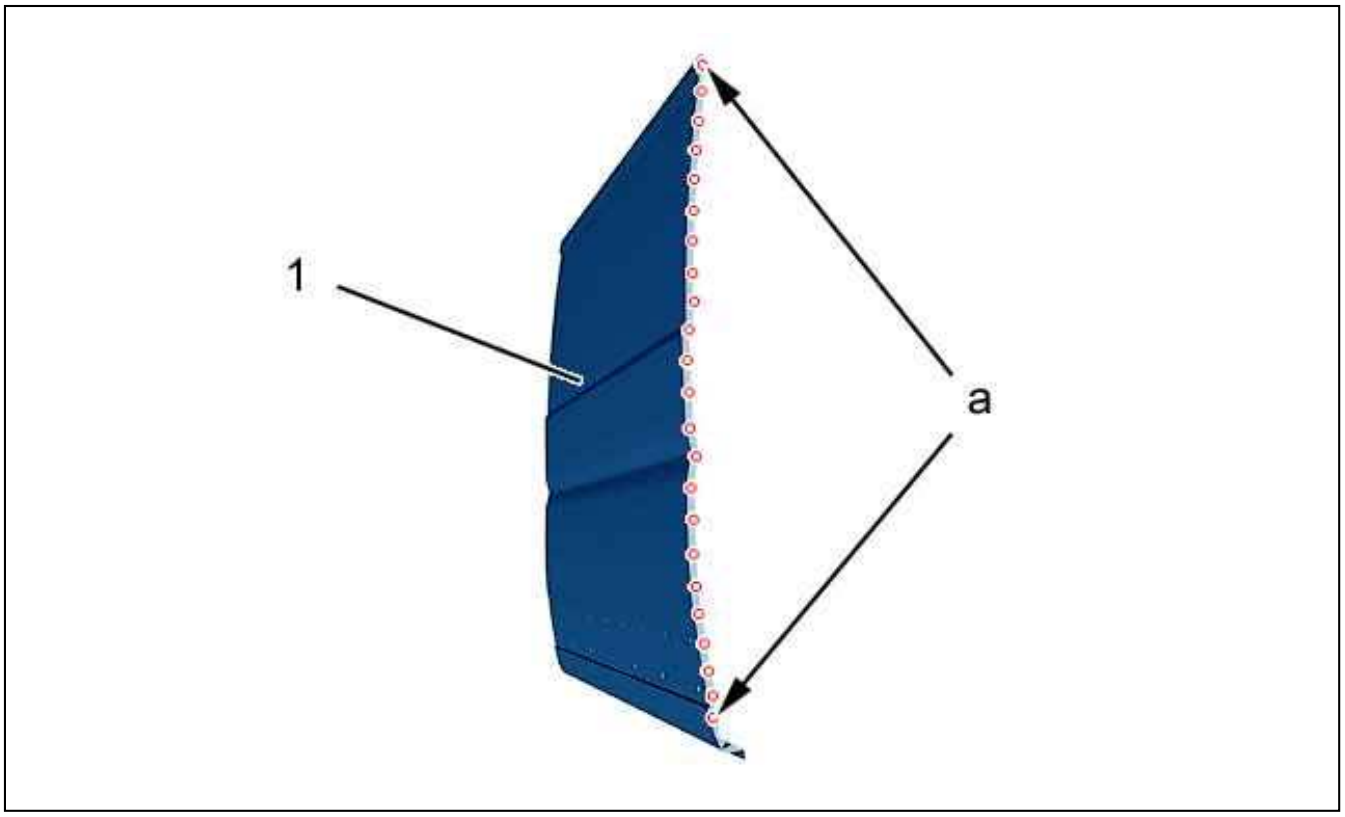

Figure : C4CP1PDD

Figure 3.
(1) Front side panel.
Repeat the operation on the opposite side (following "a").
Prepare the mating edges .

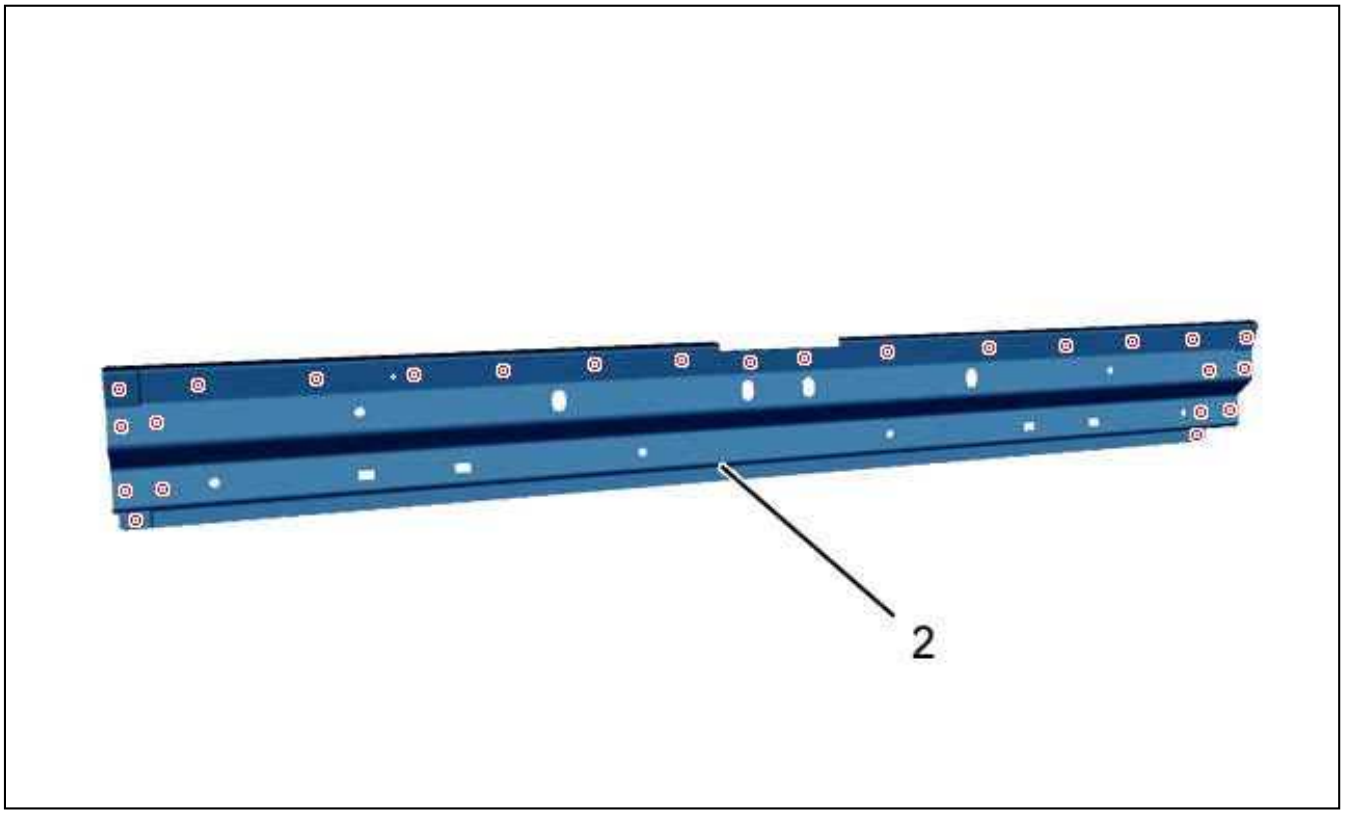

Figure : C4CP1PED

Figure 4.
(2) Top horizontal stiffener.
Mark then drill to Ø 6 mm for later plug welding (25 holes).
Prepare the mating edges .

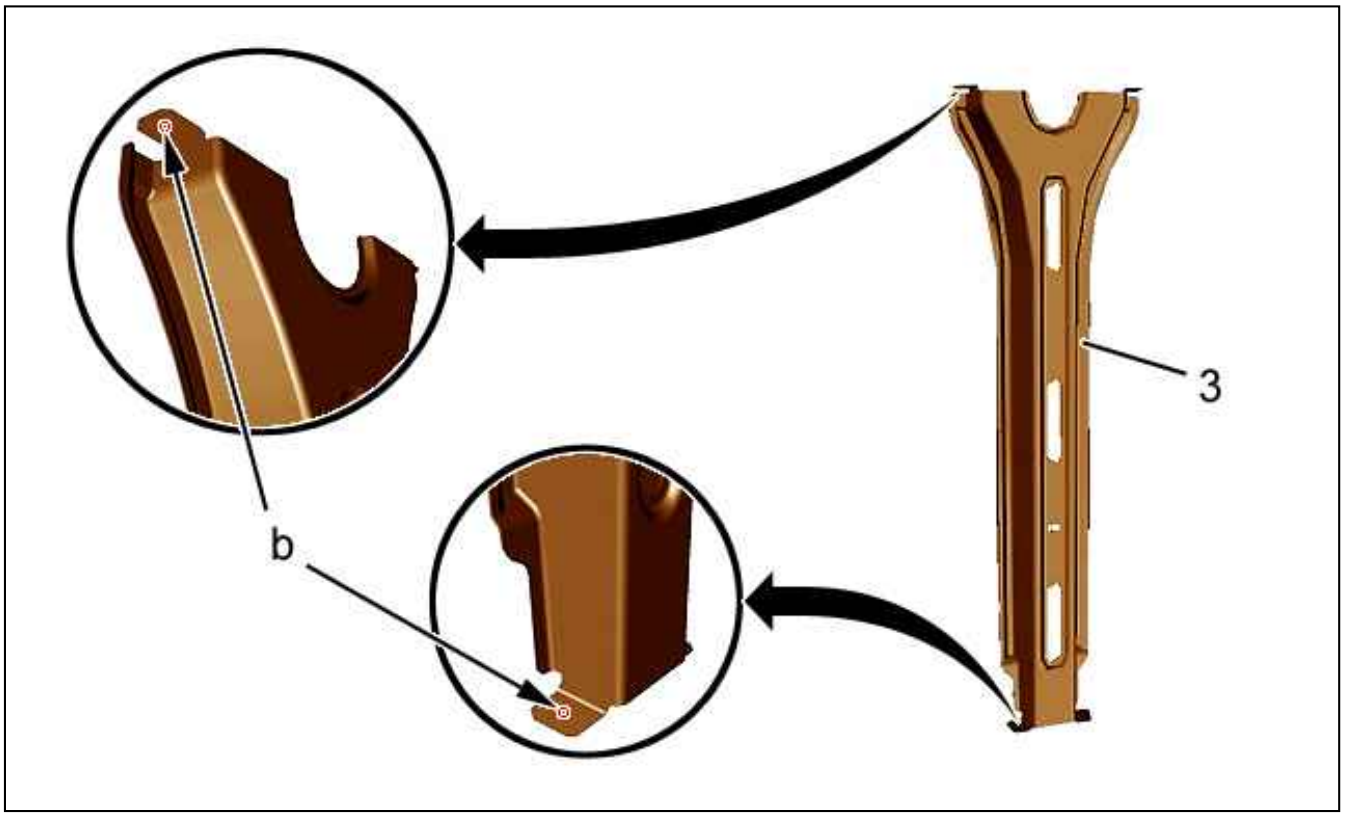

Figure : C4CP1PFD

Figure 5.
(3) Top vertical stiffener.
Mark then drill to Ø 6 mm for later plug welding (4 holes).
Repeat the operation on the opposite side (following "b").
Prepare the mating edges .

4. Cutting out

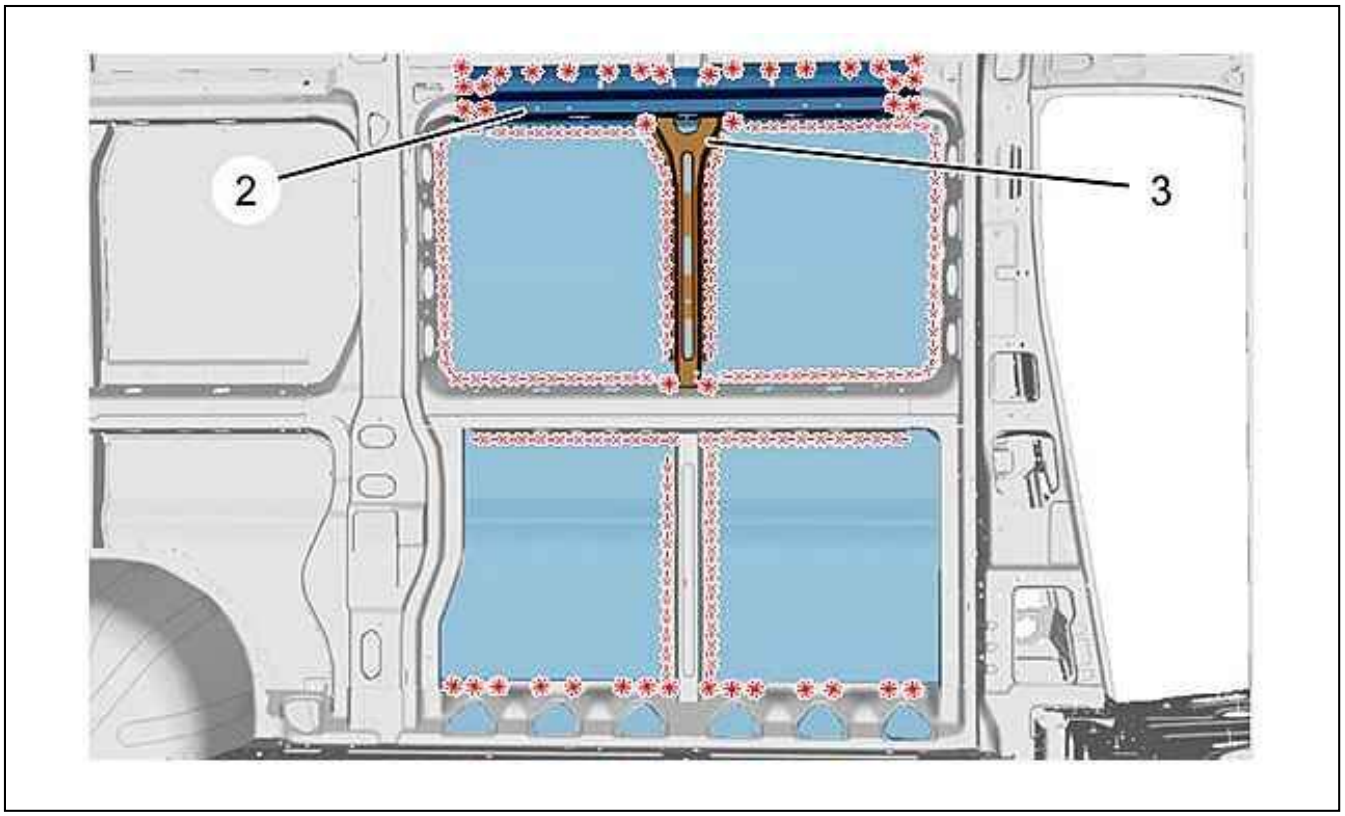

Figure : C4CP1PGD

Figure 6.
Cut away the adhesive strips .
Cut out by milling out the spot welds.
Remove :

- The top vertical stiffener (3)
- The top horizontal stiffener (2)

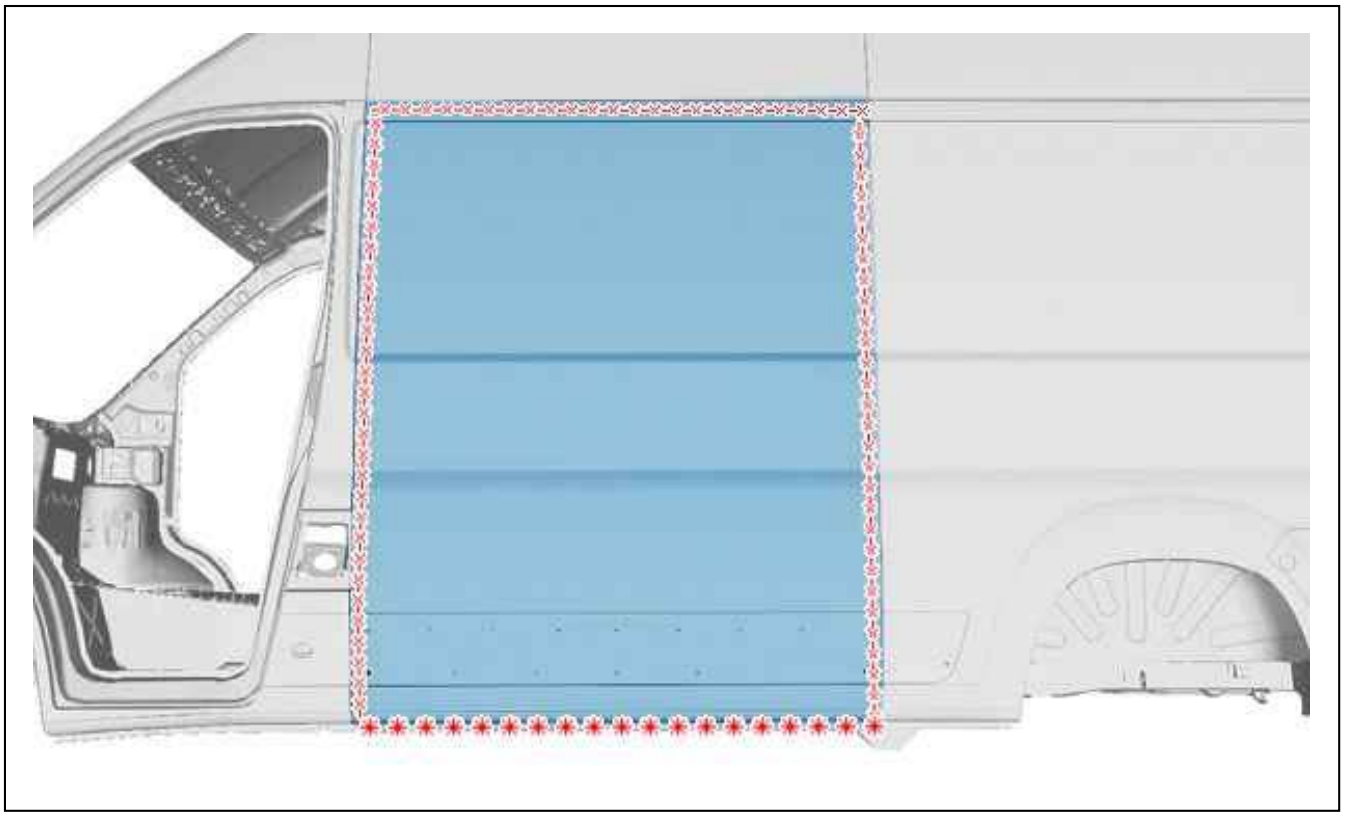

Figure : C4CP1PHD

Figure 7.
Cut out the panel to approximately 1 cm to facilitate unclipping of the lines of weld spots.
Cut out by milling out the spot welds.
Remove the front side panel.

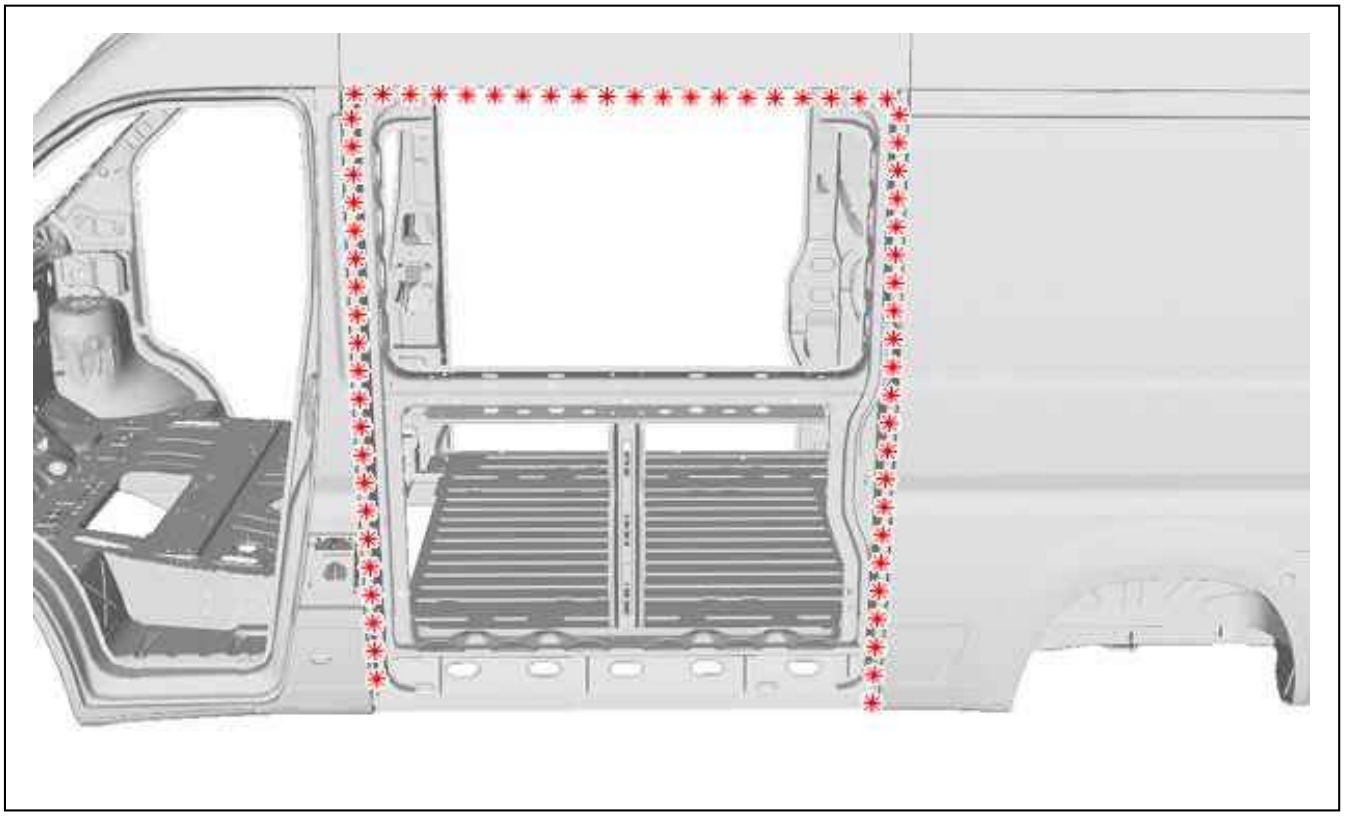

Figure : C4CP1PJD

Figure 8.
Cut out by milling out the spot welds.
Remove the remaining part of the front side panel.

5. Bodywork cleaning and preparation

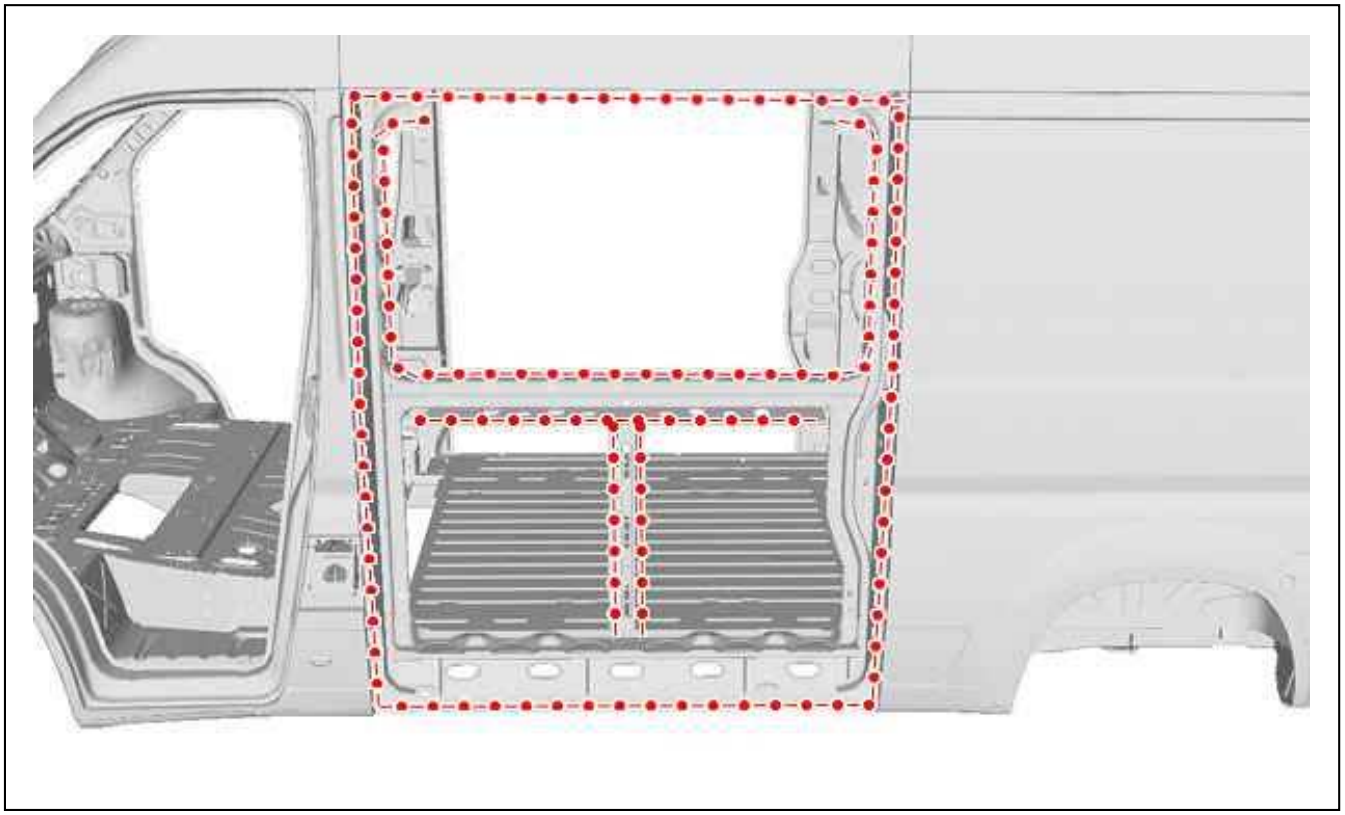

Figure : C4CP1PKD

Figure 9.
Prepare the mating edges .
Align the mating edges and protect them with a weldable primer.

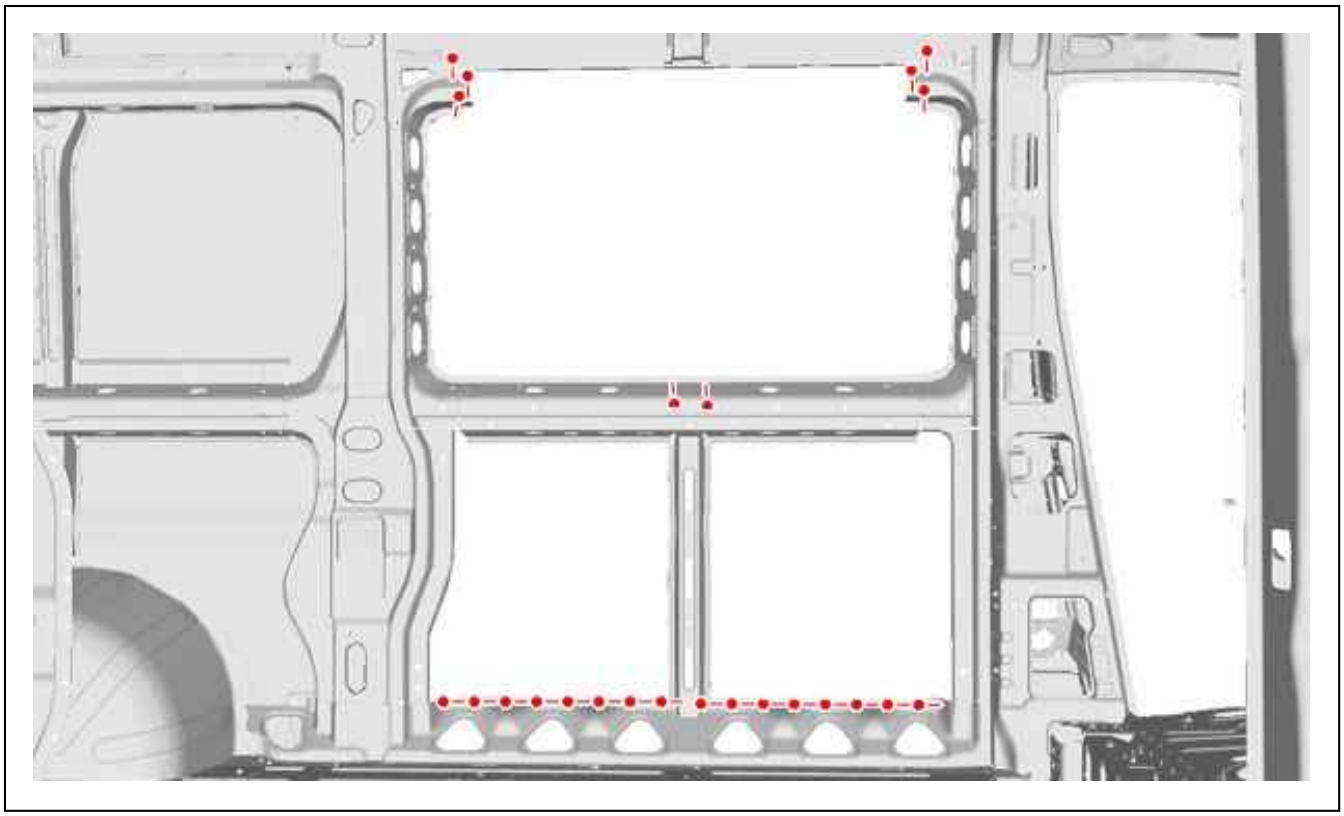

Figure : C4CP1PLD

Figure 10.
Prepare the mating edges .
Align the mating edges and protect them with a weldable primer.

6. Adjustment

Present the elements, allowing for adjustment.
Check the fits and clearances (see the relevant operation).

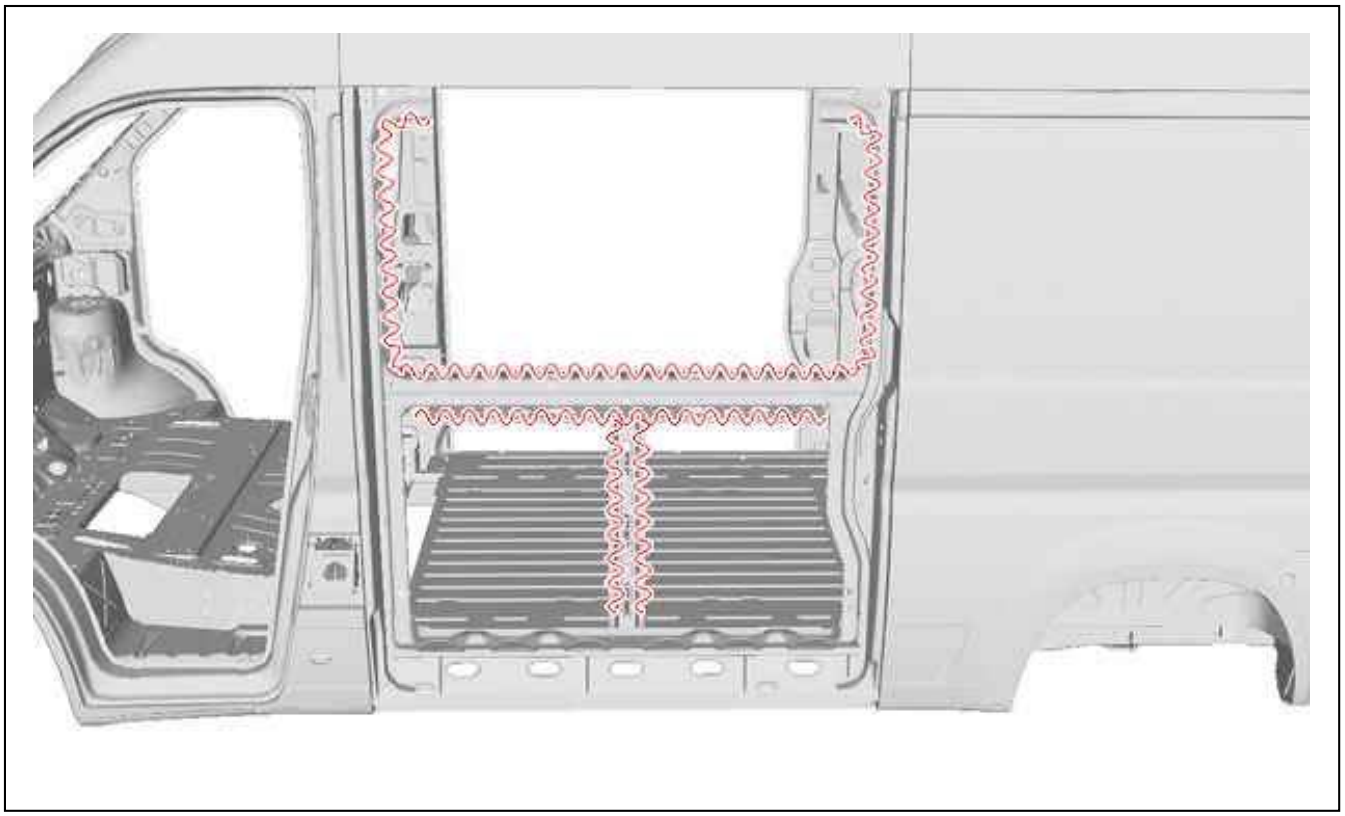

Figure : C4CP1PMD

Figure 11.
Apply structural adhesive index B8 (see the relevant operation).

7. Welding

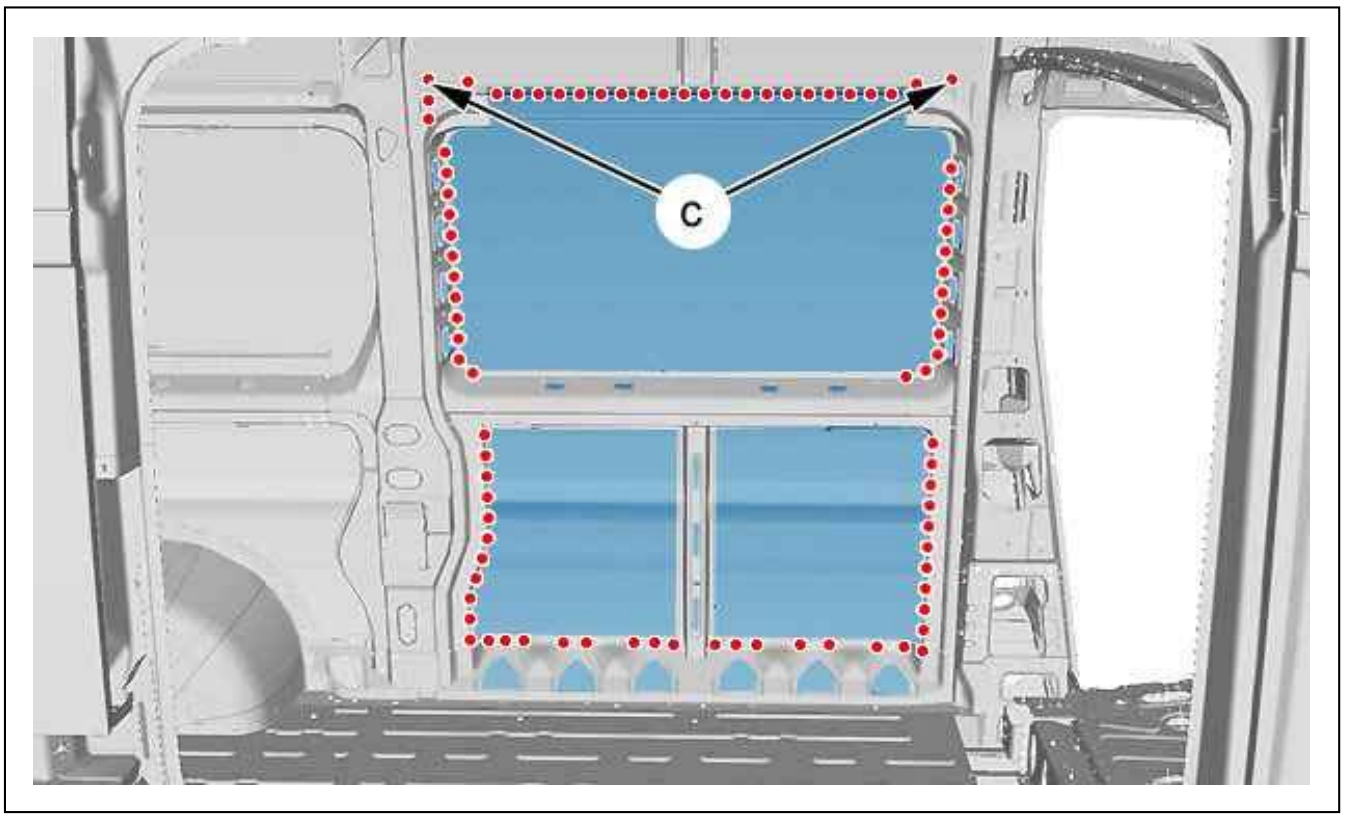

Figure : C4CP1PND

Figure 12.
Weld with electric spot welds (following "c").
Weld with plug welds (MIG or MAG).

N.B. : Access is via the inner panel openings (as per arrows).

Grind the spot welds.

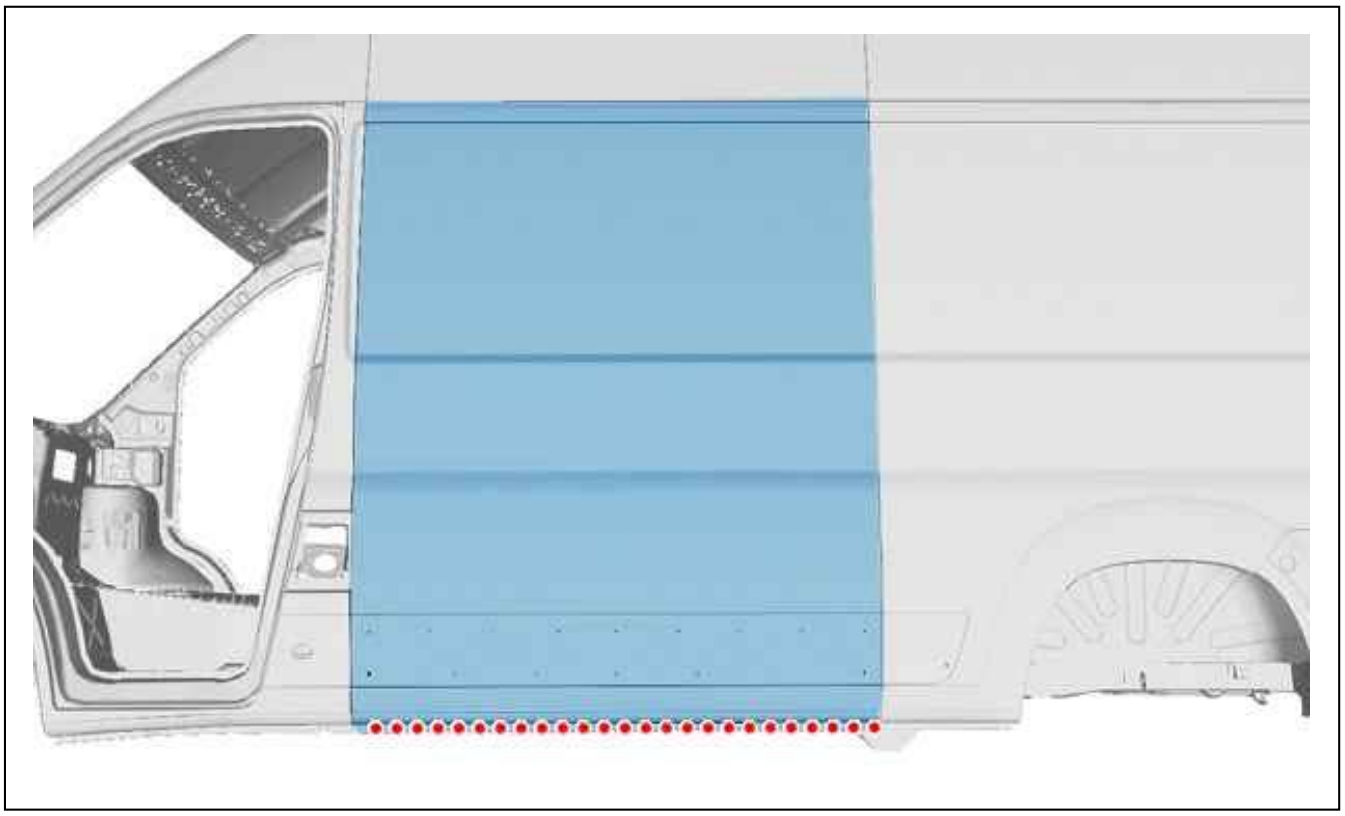

Figure : C4CP1PPD

Figure 13.
Weld with electric spot welds.

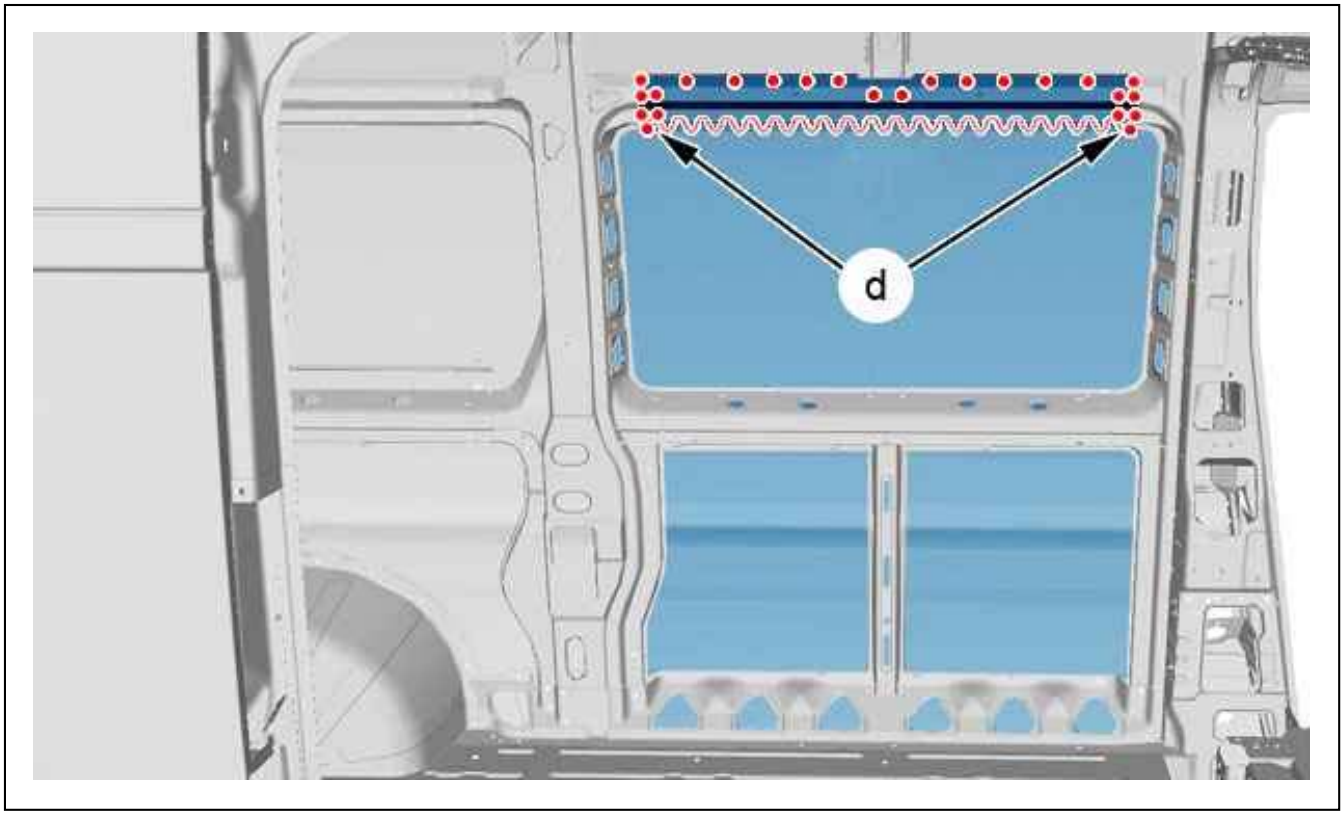

Figure : C4CP1PQD

Figure 14.
Apply structural adhesive index B8 (following "d") (see the relevant operation).
Weld with plug welds (MIG or MAG).
Grind the spot welds.

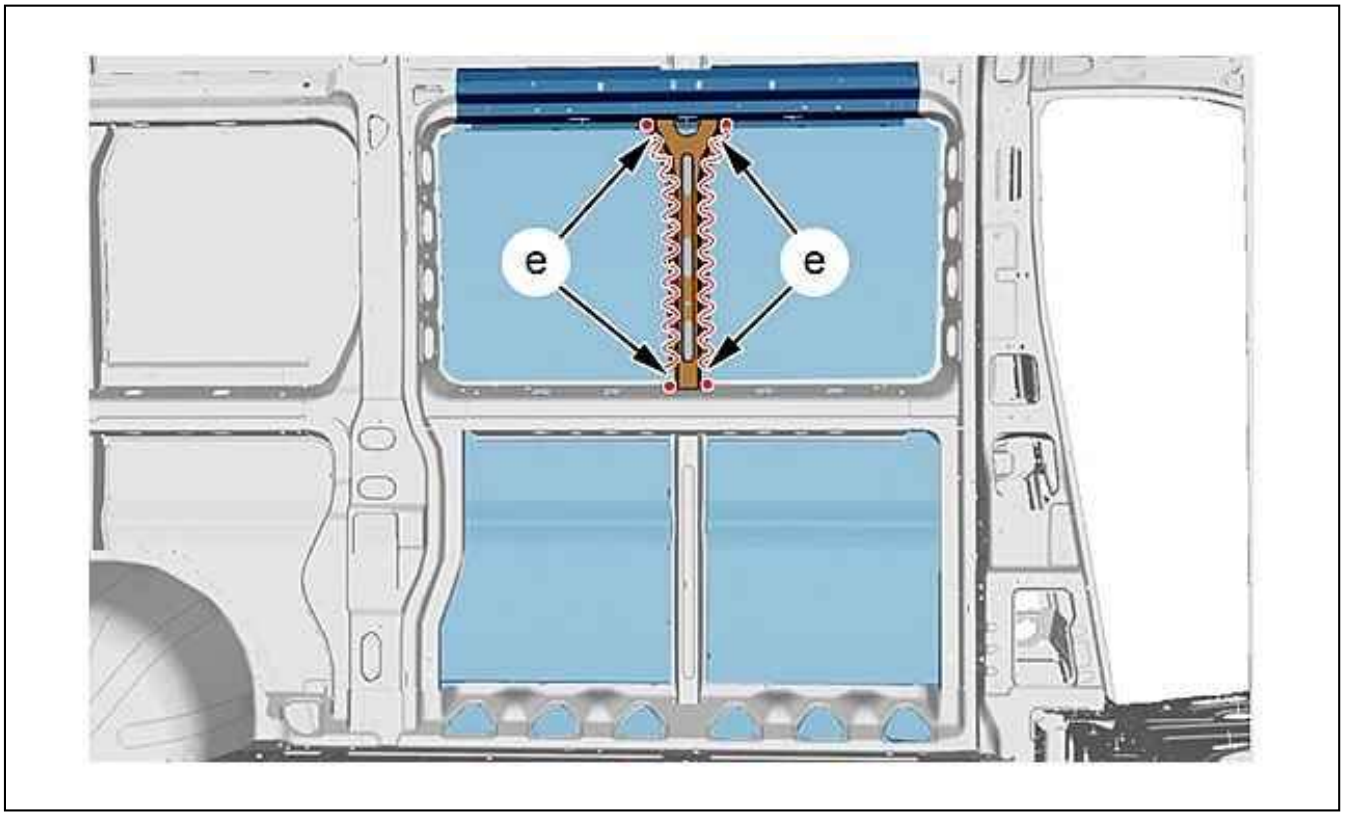

Figure : C4CP1PRD

Figure 15.
Apply structural adhesive index B8 (following "e") (see the relevant operation)..
Weld with plug welds (MIG or MAG).
Grind the spot welds.

8. Sealing

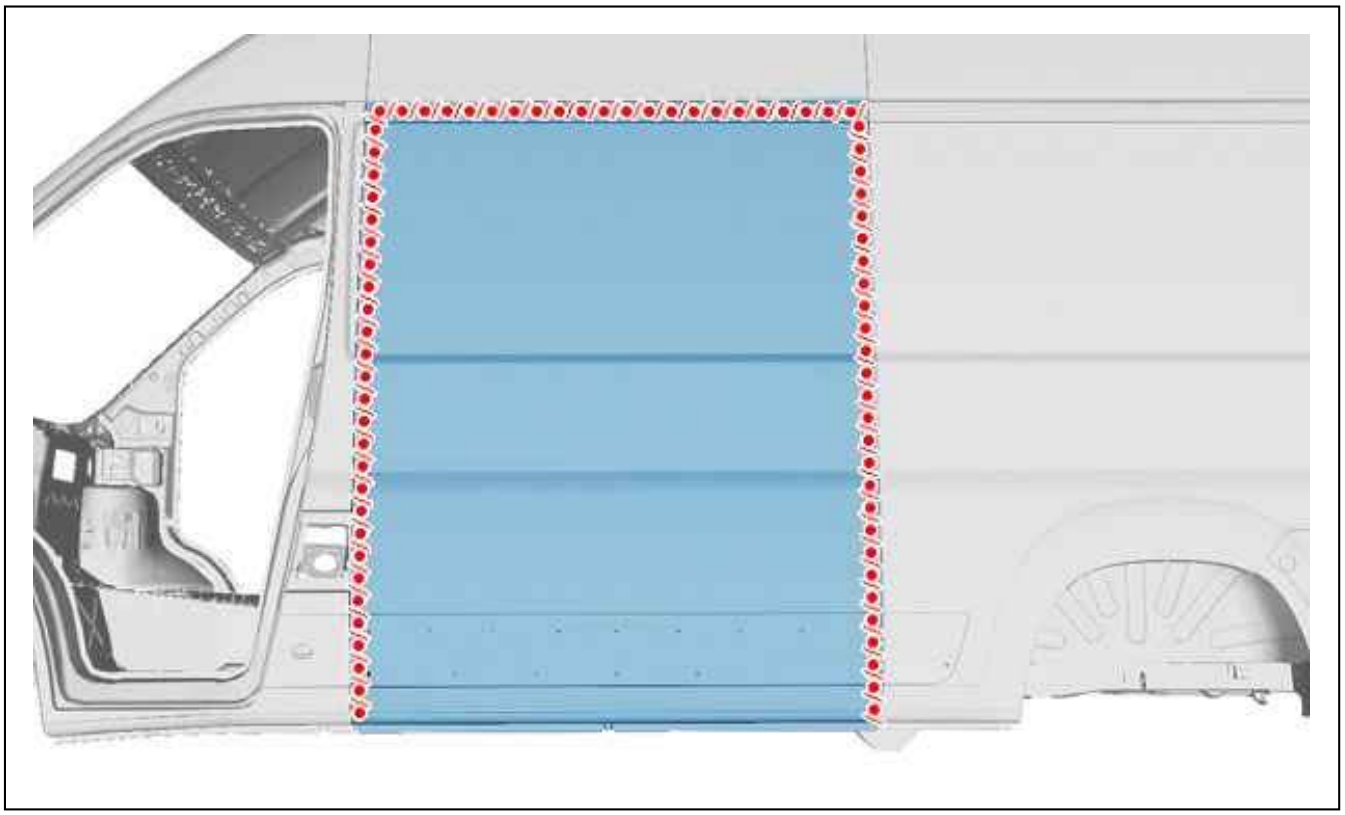

Figure : C4CP1PSD

Figure 16.
Apply a phosphate-print layer on the zone laid bare.
Apply a sealing mastic index A4 (see the relevant operation).

9. Protection

Paint then spray into the hollow sections, product index C5, in the repair zone (see the relevant operation).
Apply an anti-chip layer (see the relevant operation).

10. Reinitialisation

Reconnect the battery.

ESSENTIAL : Perform the operations to be carried out following reconnection of the battery.

REPLACEMENT : PARTIAL REAR SIDE PANEL REAR INNER PANEL

ESSENTIAL : All of the stripped surfaces must be protected by means of the approved electrolytic rezincing process (see the relevant operation).

ESSENTIAL : Observe the elementary rules of hygiene and safety (wear a face mask to protect against fumes and vapour - work in a well ventilated space).

1. Additional operations

Disconnect the battery.
Replace the rear pillar upper bracket and the partial rear pillar inner panel (see the relevant operation).
Release the wiring harnesses.

2. Identification of the replacement parts



Figure : C4BP1Q4D

Figure 1.
Rear side panel rear inner panel.

3. Replacement part preparation

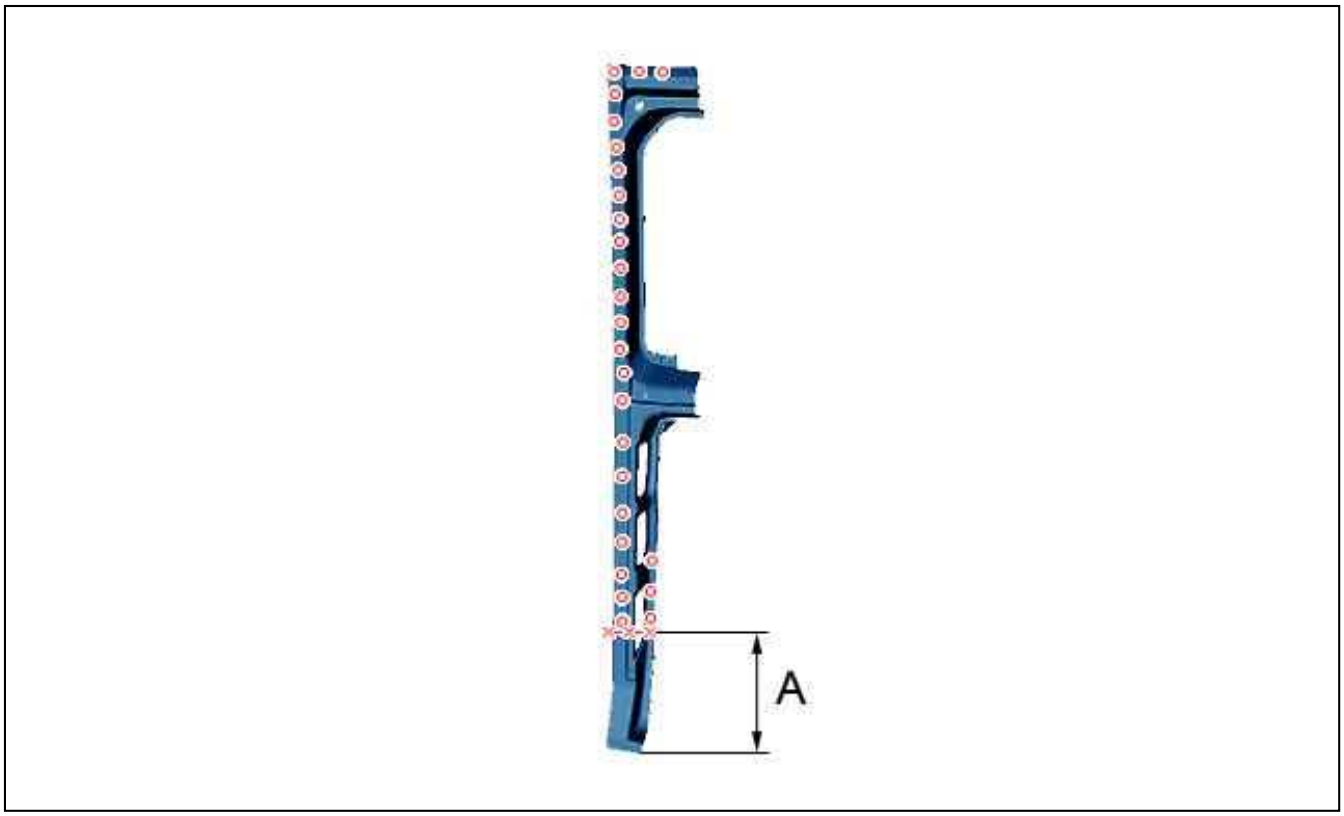

Figure : C4BP1Q5D

Figure 2.
Rear side panel rear inner panel.
Mark then cut (final cutting).
Mark then drill to Ø 6 mm for later plug welding (26 holes).
Prepare the mating edges .

4. Cutting out

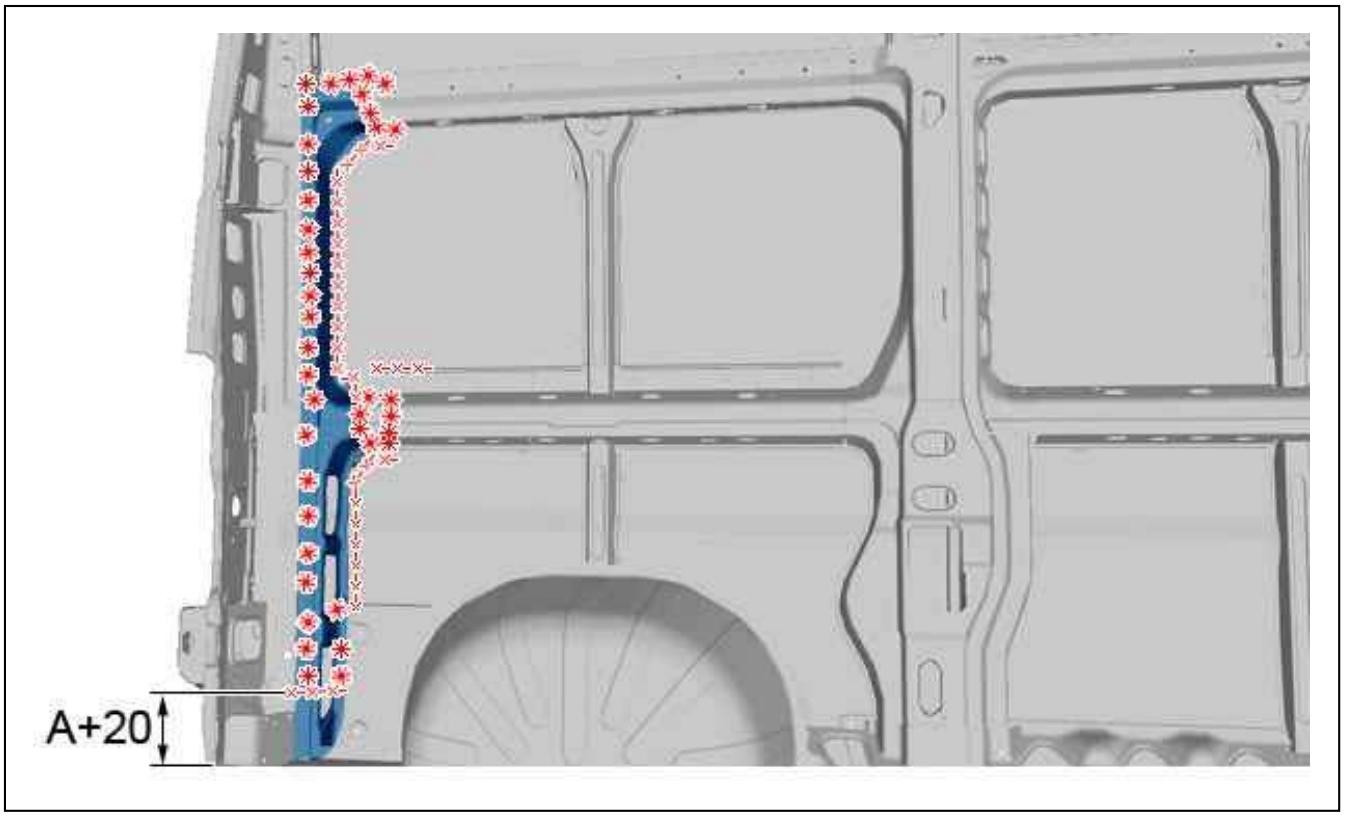

Figure : C4CP1SKD

Figure 3.
Mark then cut (preliminary cut).
Cut :

- The structural adhesive strips
- The spotwelds

Remove the rear side panel rear inner panel.

5. Bodywork cleaning and preparation

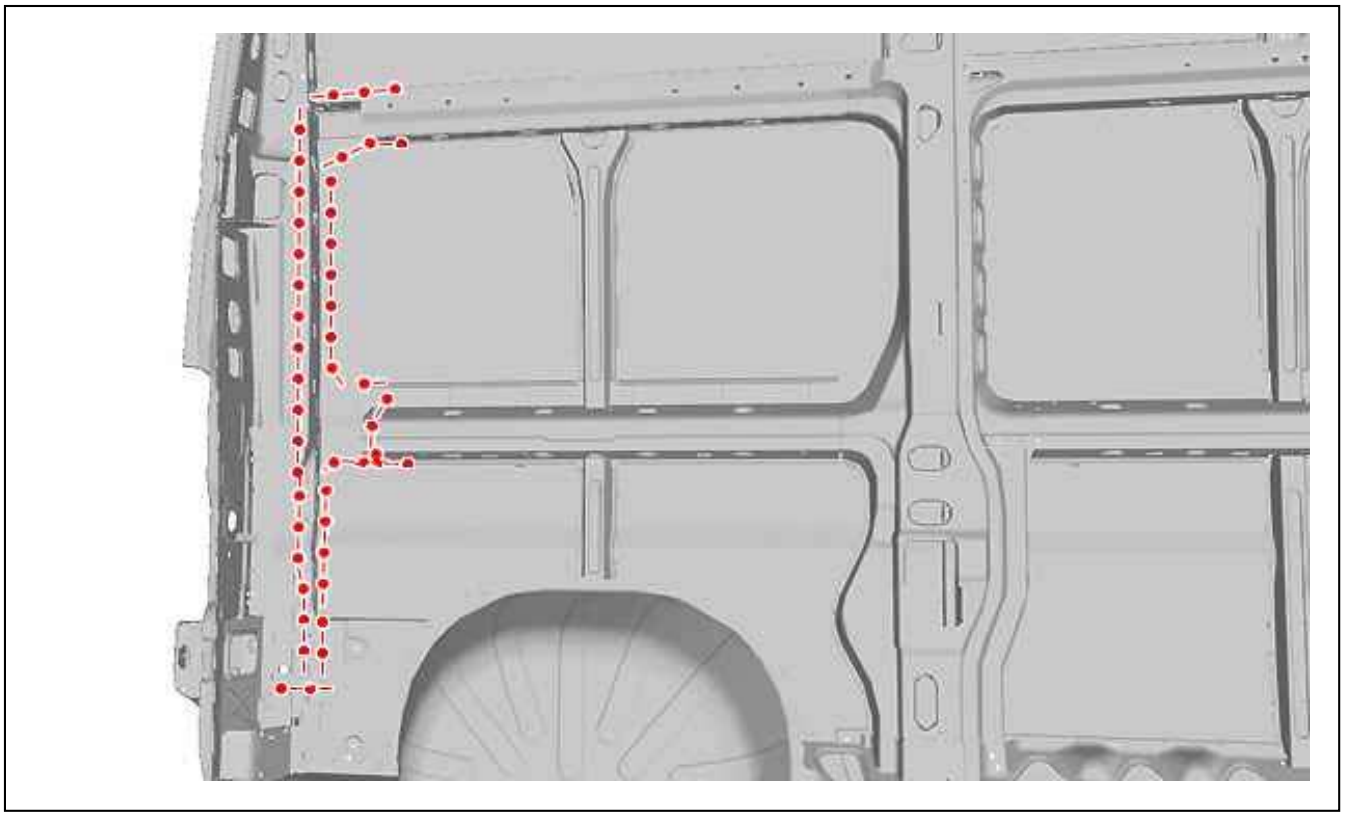

Figure : C4CP1SLD

Figure 4.
Prepare the mating edges .
Align the mating edges and protect them with a weldable primer.

6. Adjustment

Present the component for adjustment.
Check the fits and clearances (see the relevant operation).

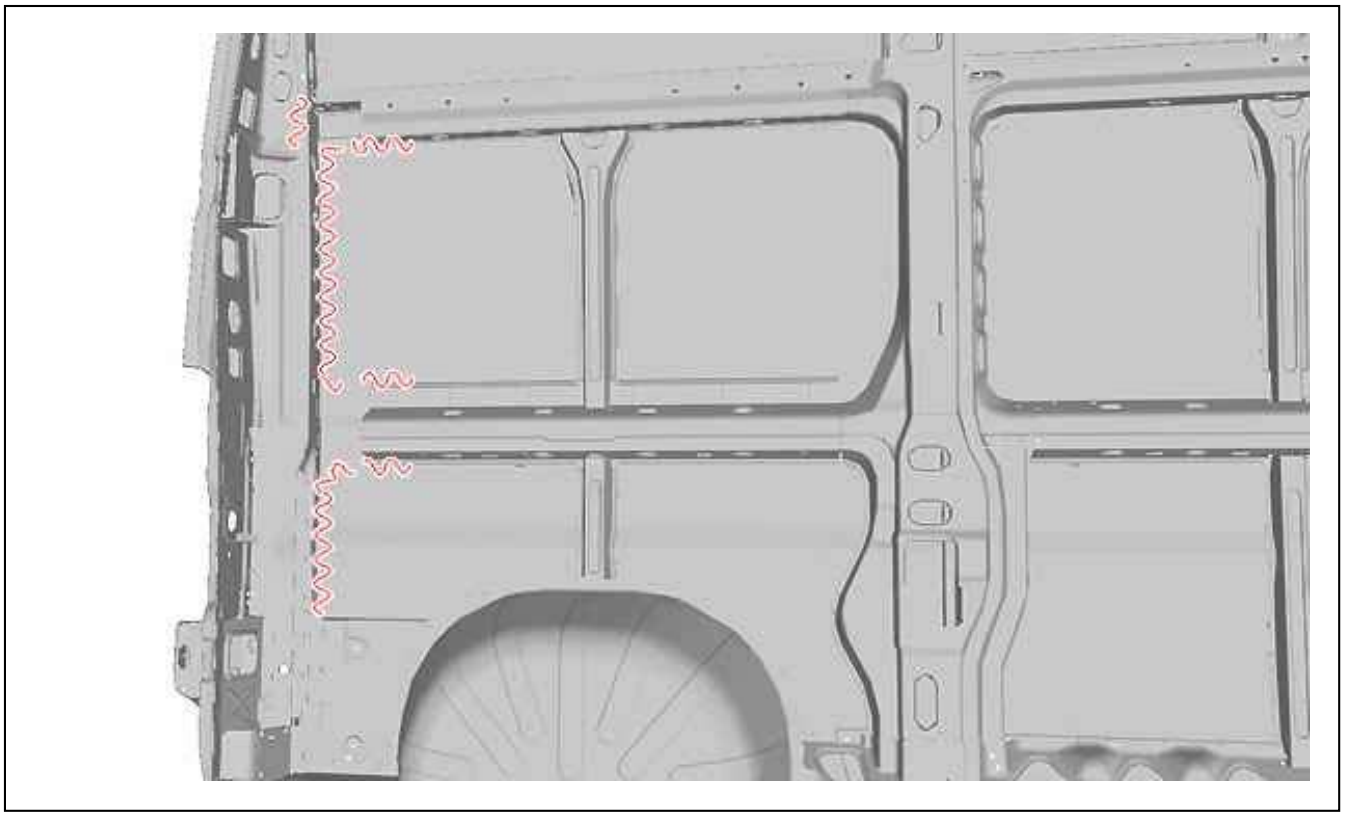

Figure : C4CP1SMD

Figure 5.
Apply "B8" structural adhesive (see the relevant operation).

7. Welding

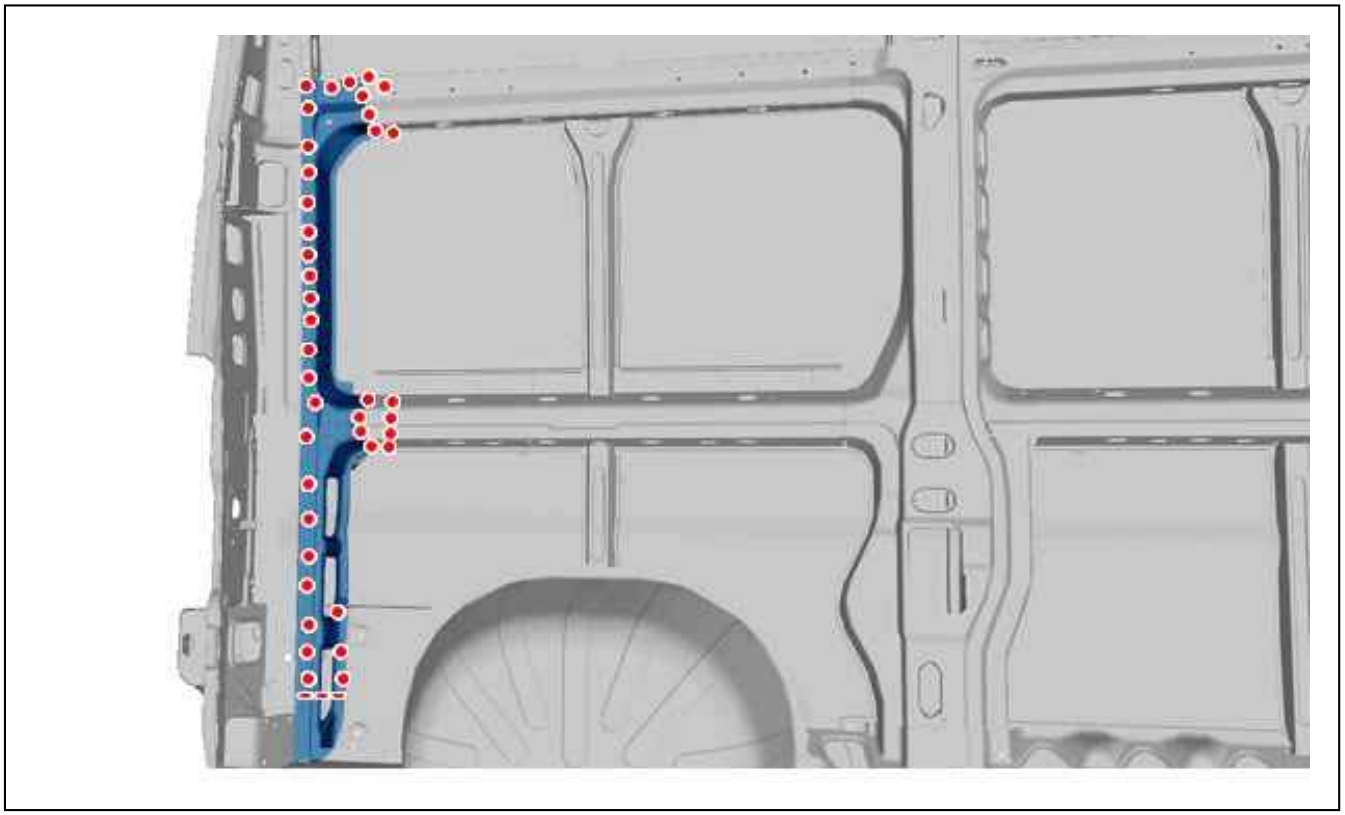

Figure : C4CP1SND

Figure 7.
Weld using successive beads (MIG or MAG).
Grind the welds.
Weld with plug welds (MIG or MAG).
Grind the spot welds.

8. Protection

Paint then spray into the hollow sections, product index C5, in the repair zone (see the relevant operation).

9. Reinitialisation

Reconnect the battery.

ESSENTIAL : Perform the operations to be carried out following reconnection of the battery.

REPLACEMENT : REAR SIDE PANEL - TOP HORIZONTAL AND VERTICAL STIFFENERS

ESSENTIAL : All of the stripped surfaces must be protected by means of the approved electrolytic rezincing process (see the relevant operation).

ESSENTIAL : Observe the elementary rules of hygiene and safety (wear a face mask to protect against fumes and vapour - work in a well ventilated space).

1. Additional operations

Disconnect the battery.
Replacement :

- Front side panel - Top horizontal and vertical stiffeners (see the relevant operation)
- C post upper inner panel - Part C post inner panel (see the relevant operation)
- Part side panel rear inner panel (see the relevant operation)

Release the wiring harnesses.

2. Identification of the replacement parts

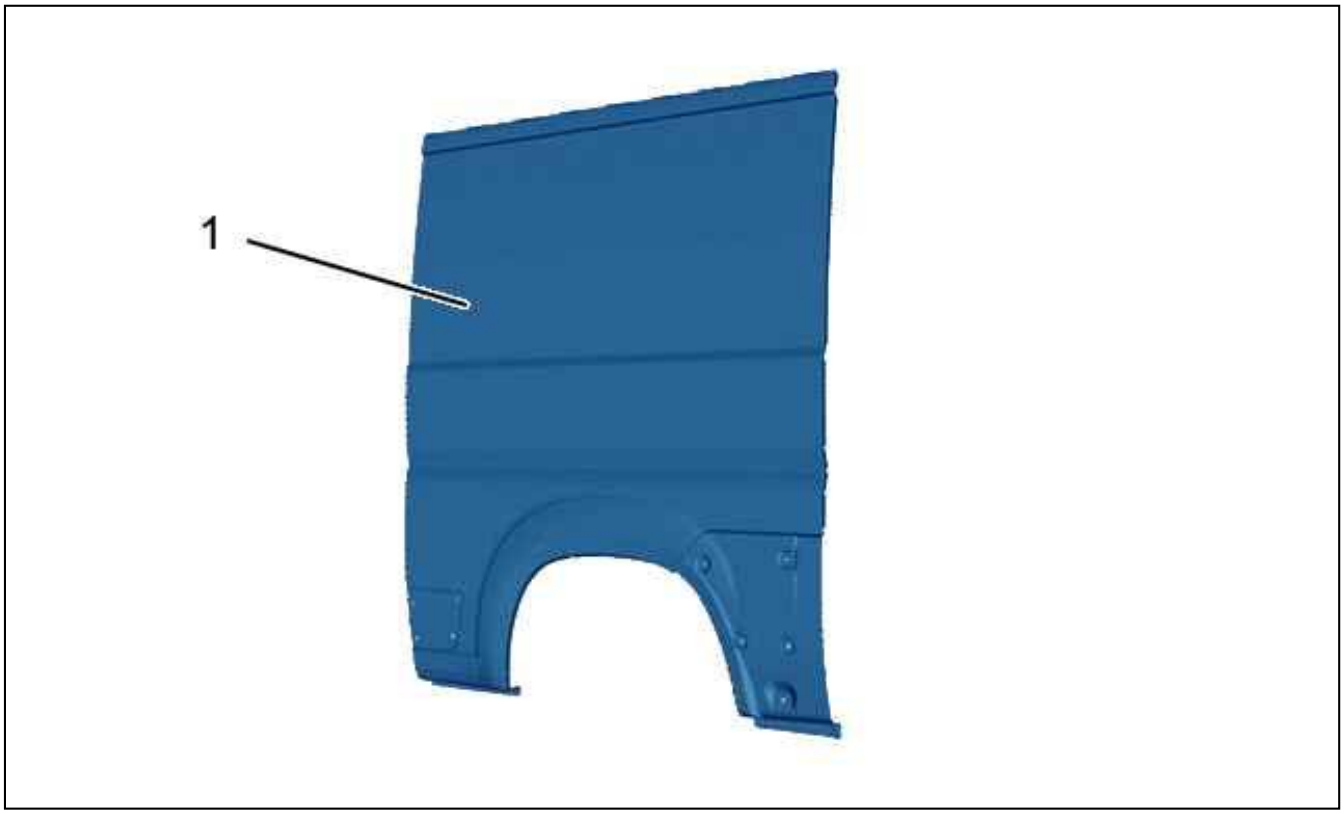

Figure : C4CP1SPD

Figure 1.
(1) Rear side panel..

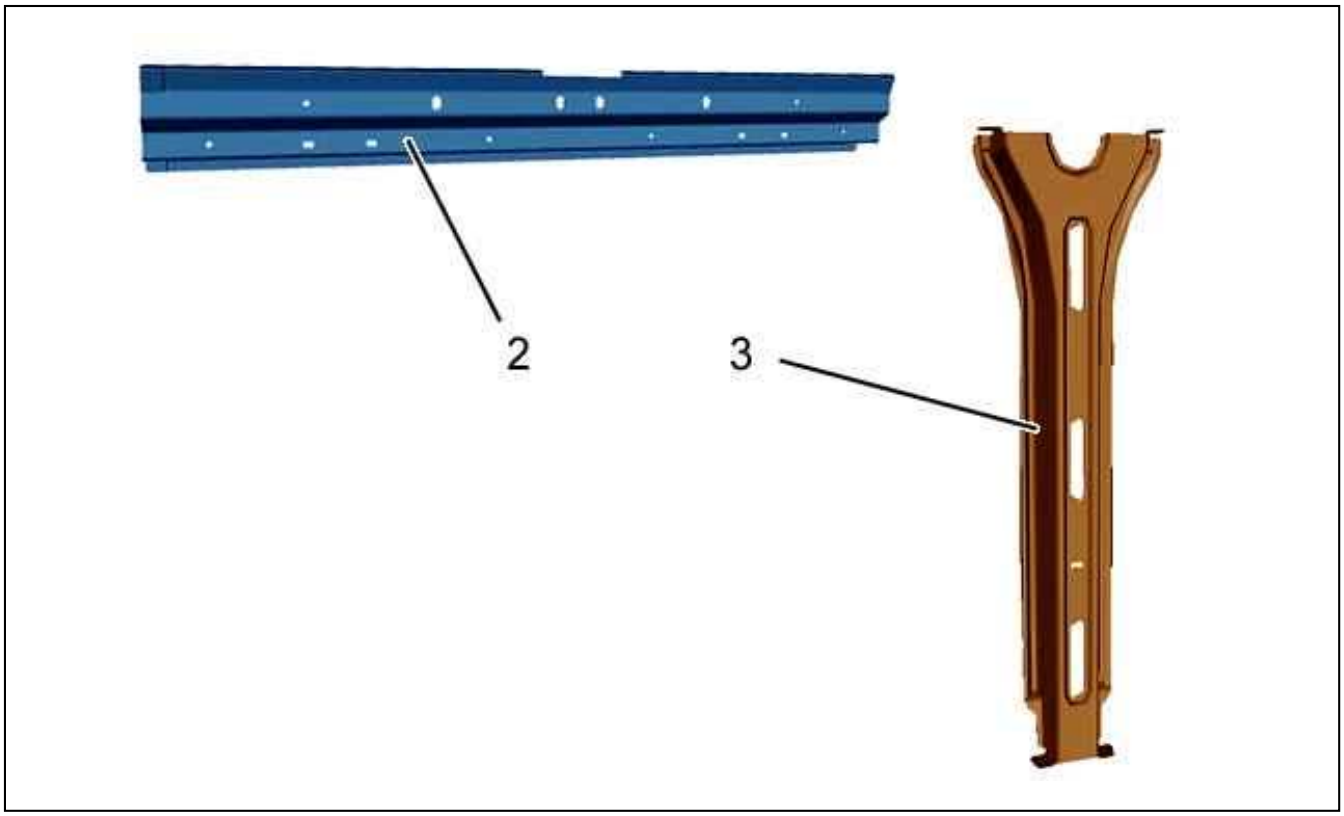

Figure : C4CP1SQD

Figure 2.
(2) Top horizontal stiffener.
(3) Top vertical stiffener.

3. Replacement part preparation

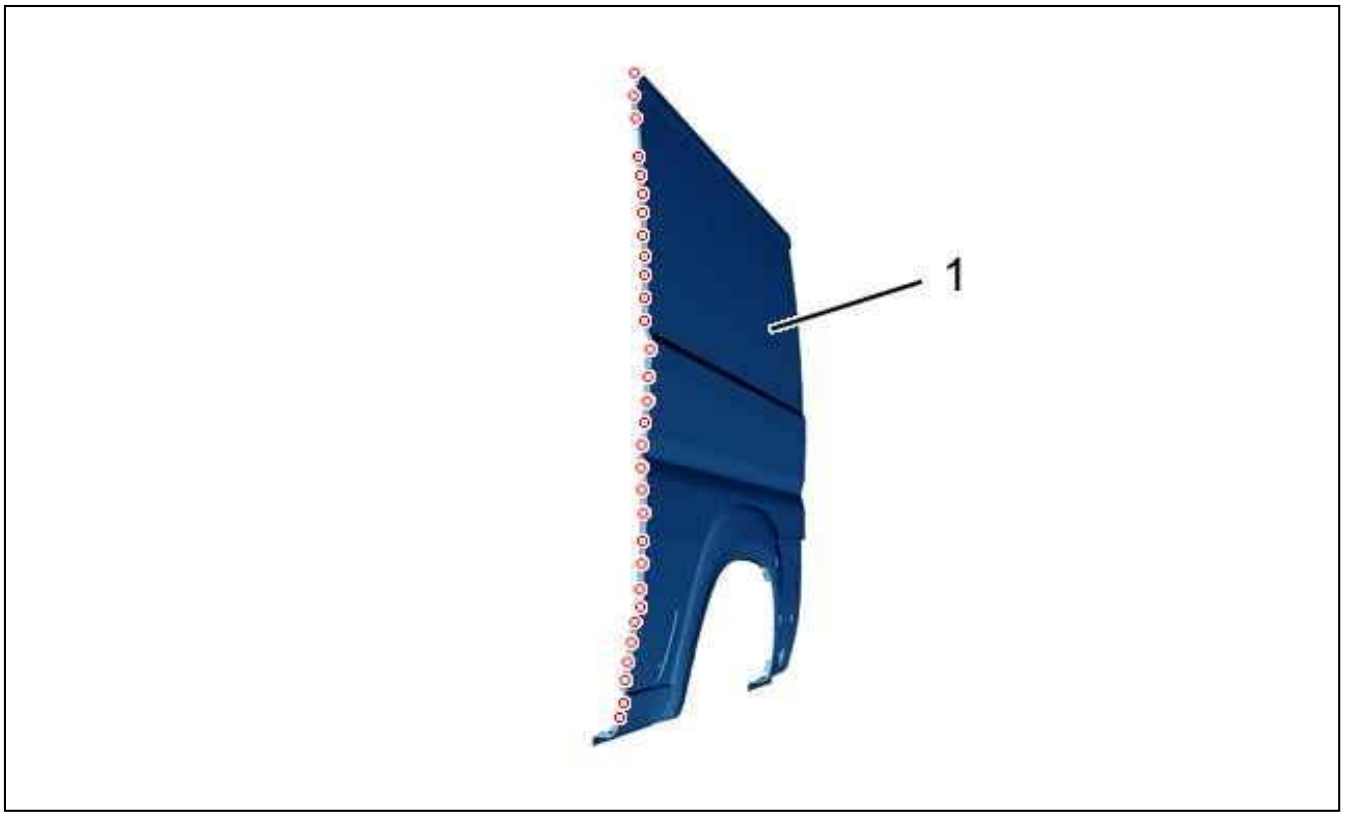

Figure : C4CP1SRD

Figure 3.
(1) Rear side panel.
Mark then drill 30 holes to Ø 6 mm for later plug welding.
Prepare the mating edges .

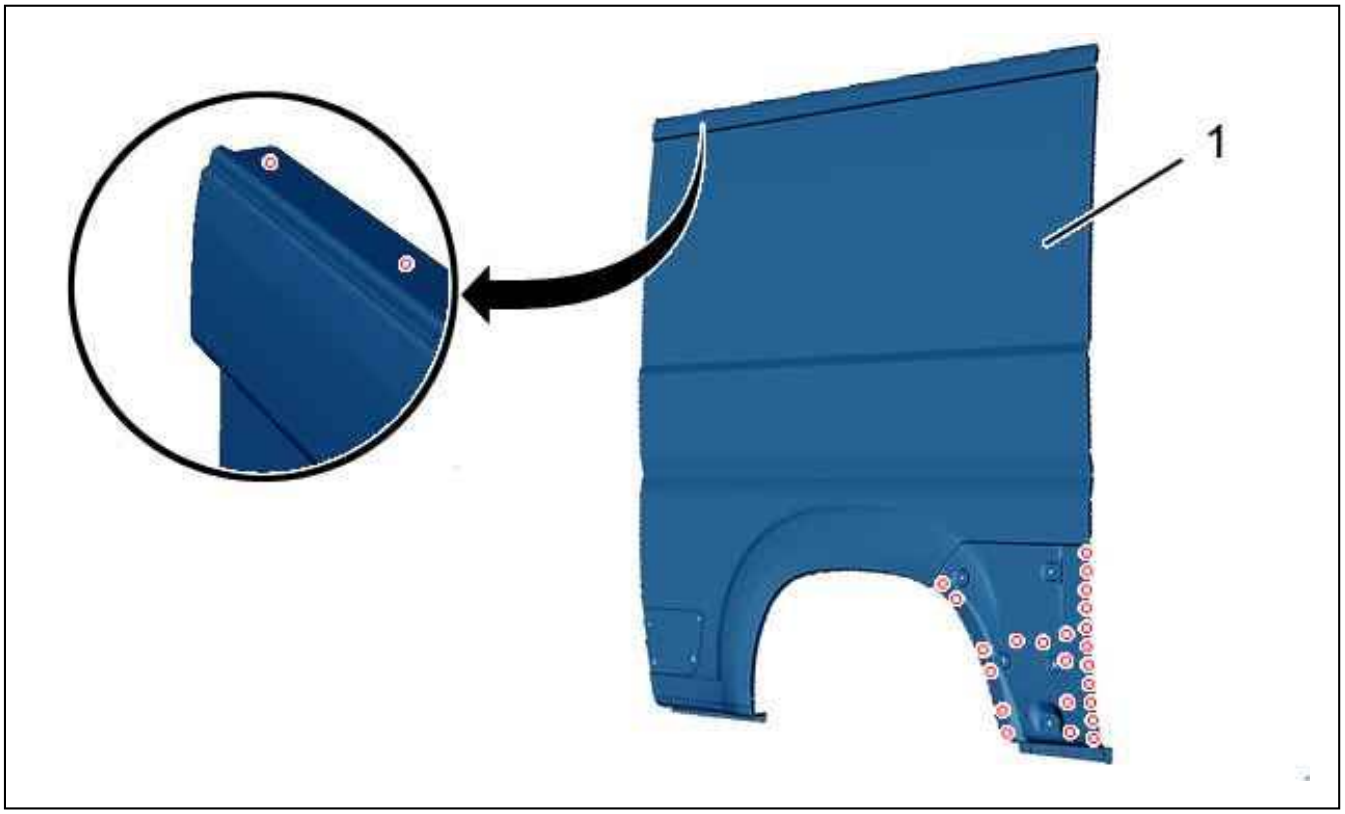

Figure : C4CP1SSD

Figure 4.
(1) Rear side panel.
Mark then drill to Ø 6 mm for later plug welding (25 holes).
Prepare the mating edges .

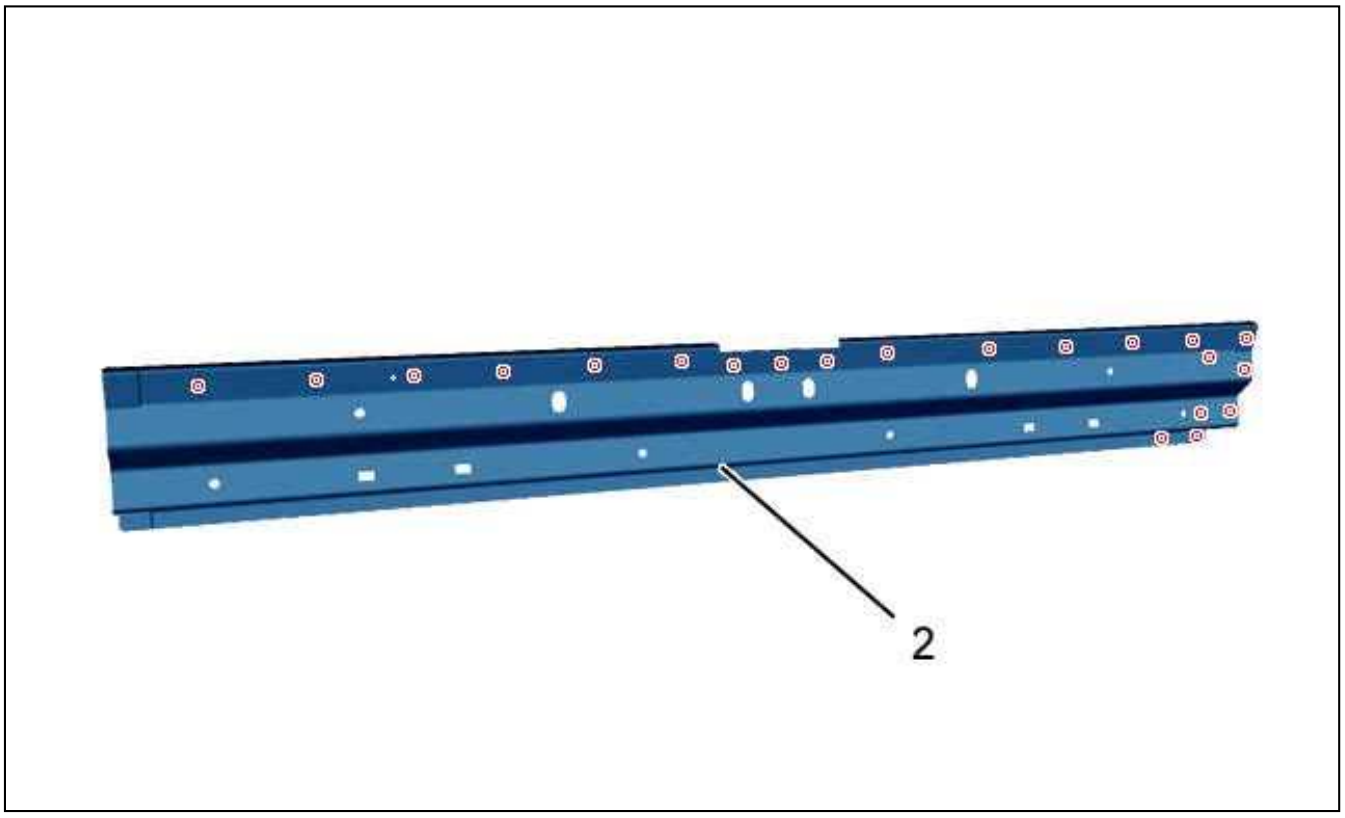

Figure : C4CP1STD

Figure 5.
(2) Top horizontal stiffener.
Mark then drill to Ø 6 mm for later plug welding (21 holes).
Prepare the mating edges .

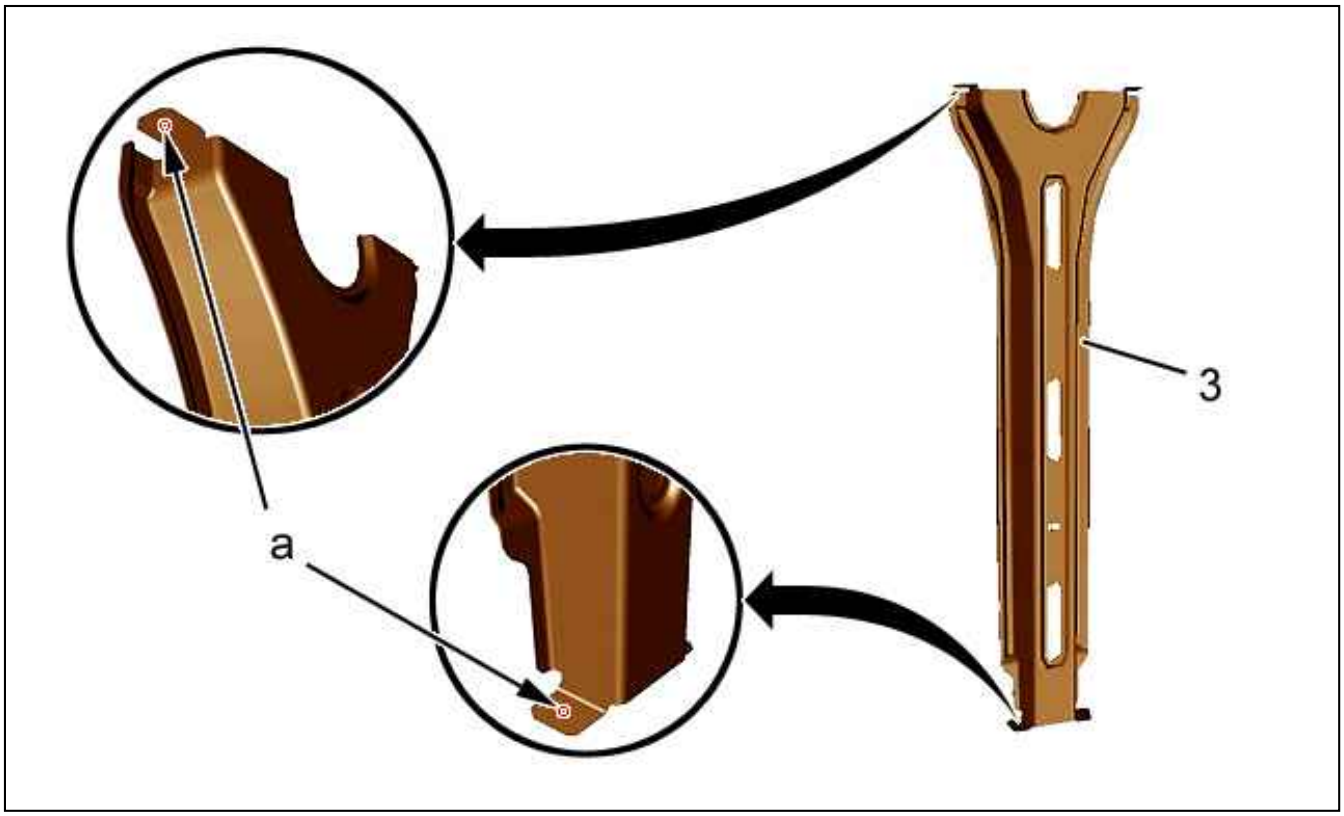

Figure : C4CP1SUD

Figure 6.
(3) Top vertical stiffener.
Mark then drill to Ø 6 mm for later plug welding (4 holes).
Repeat the operation on the opposite side (following "a").
Prepare the mating edges .

4. Cutting out

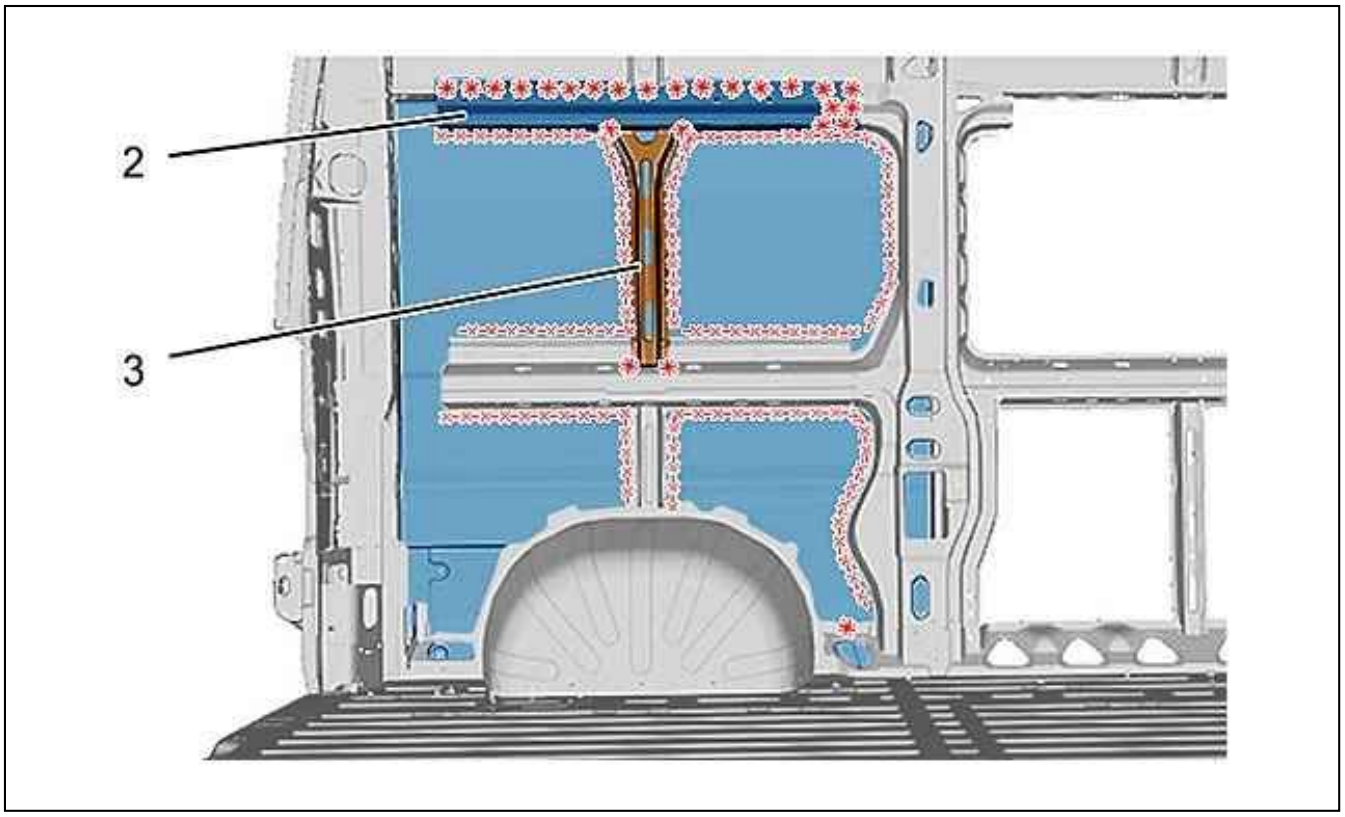

Figure : C4CP1SVD

Figure 7.
Cut :

- The structural adhesive strips
- The spotwelds

Remove :

- The top vertical stiffener (3)
- The top horizontal stiffener (2)

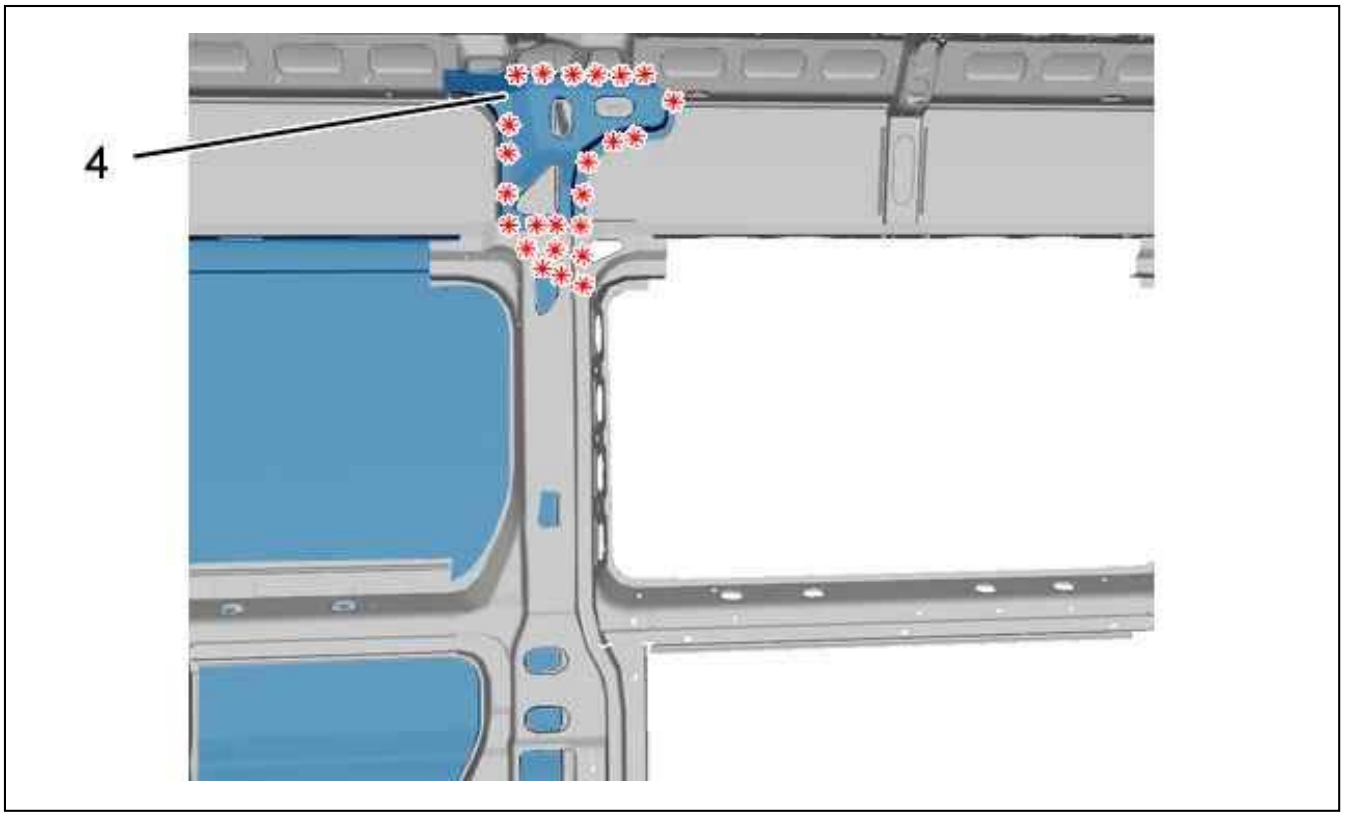

Figure : C4CP1SWD

Figure 8.
Cut out the spot welds .
Remove the B post upper strengthener (4).

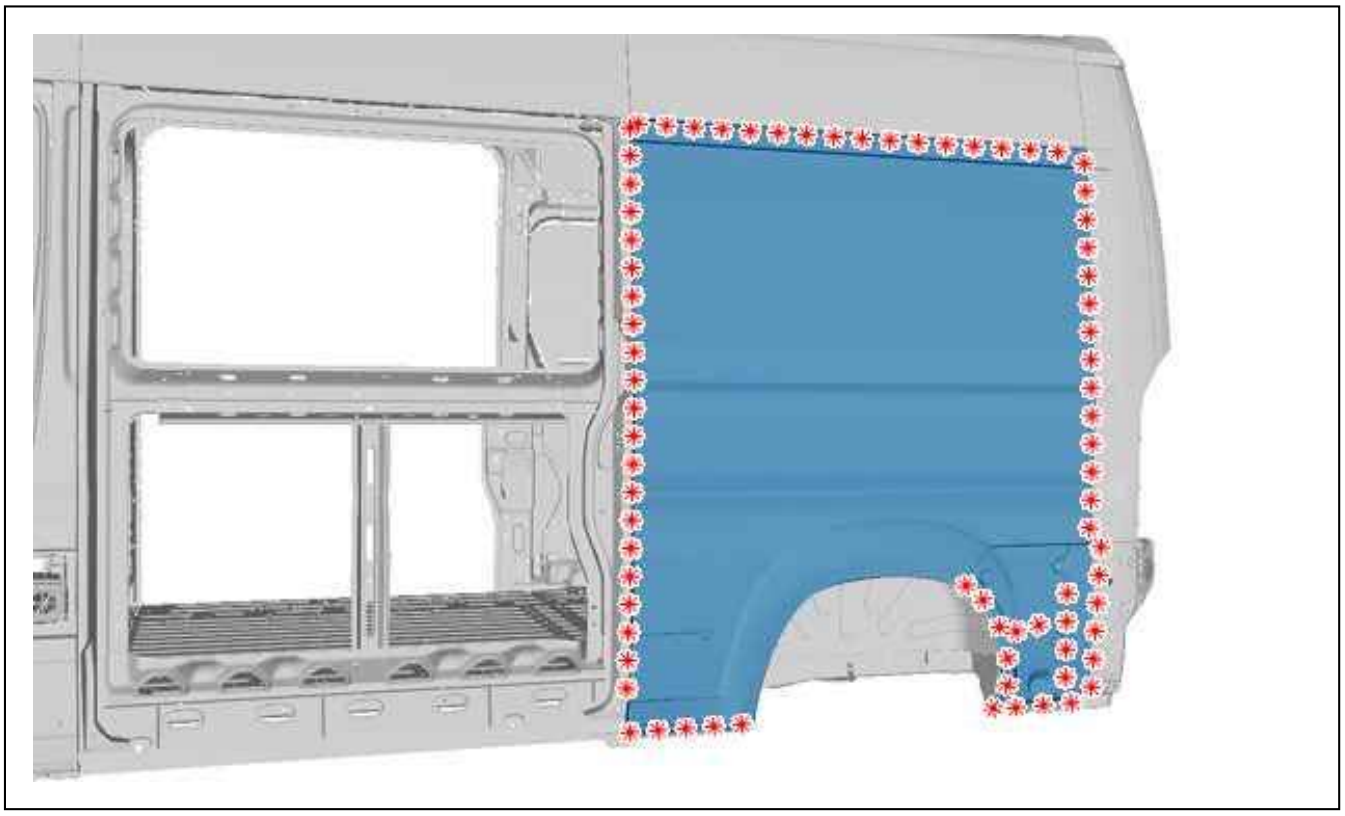

Figure : C4CP1SXD

Figure 9.
Cut out the panel to approximately 1 cm to facilitate unclipping of the lines of weld spots.
Cut out the spot welds .
Remove the rear side panel.

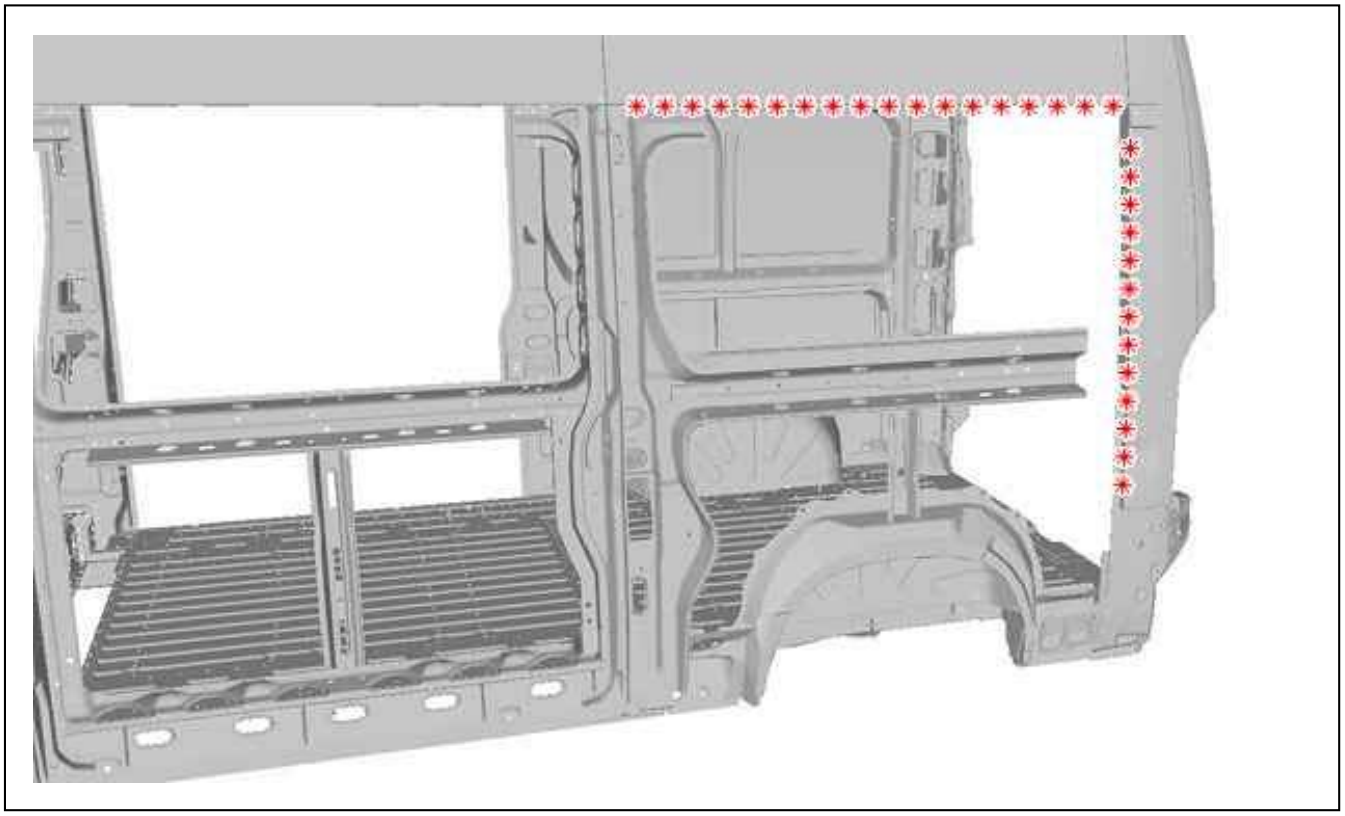

Figure : C4CP1SYD

Figure 10.
Cut out the spot welds .
Remove the remaining part of the rear side panel.

5. Bodywork cleaning and preparation

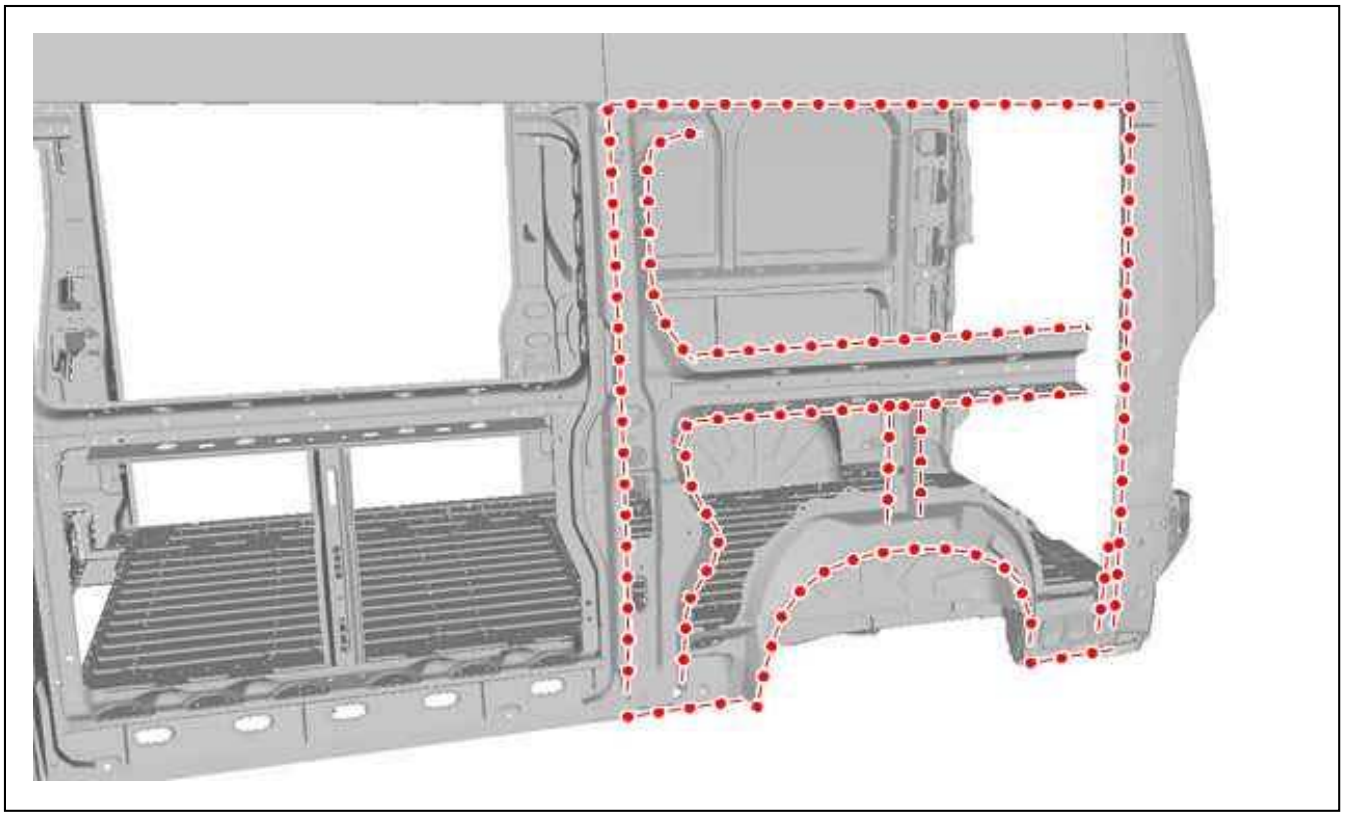

Figure : C4CP1SZD

Figure 11.
Prepare the mating edges .
Align the mating edges and protect them with a weldable primer.

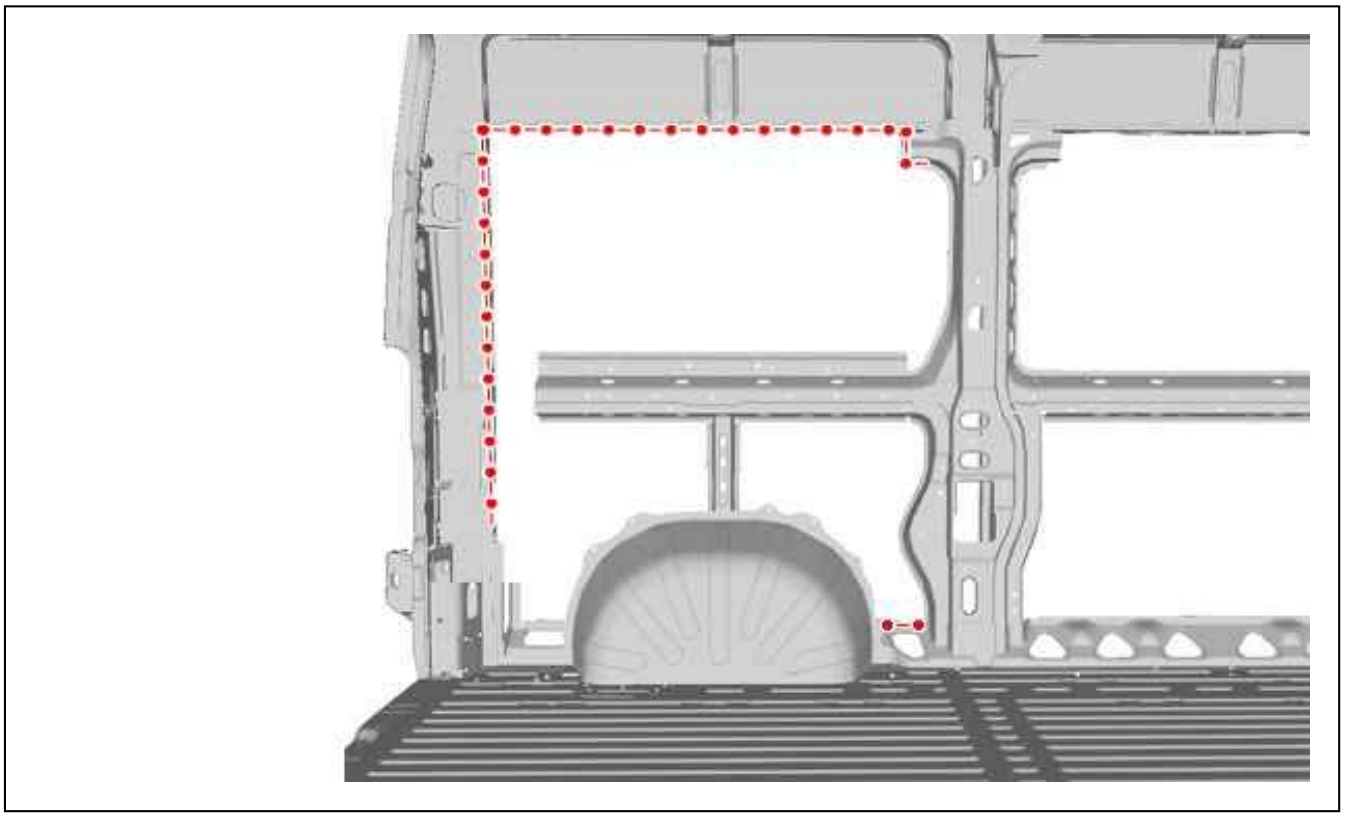

Figure : C4CP1T0D

Figure 12.
Prepare the mating edges .
Align the mating edges and protect them with a weldable primer.

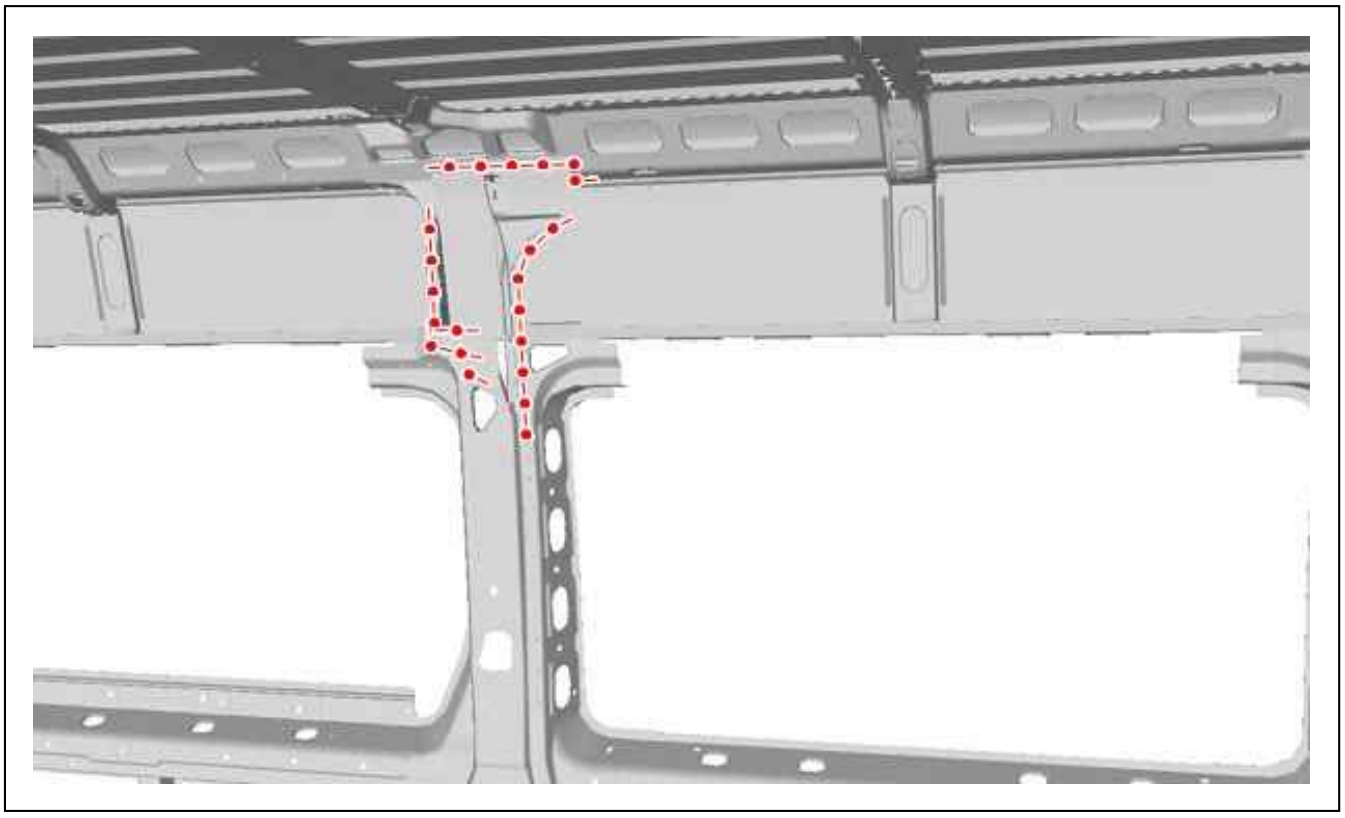

Figure : C4CP1T1D

Figure 13.
Prepare the mating edges .
Align the mating edges and protect them with a weldable primer.

6. Adjustment

Present the elements, allowing for adjustment.
Check the fits and clearances (see the relevant operation).

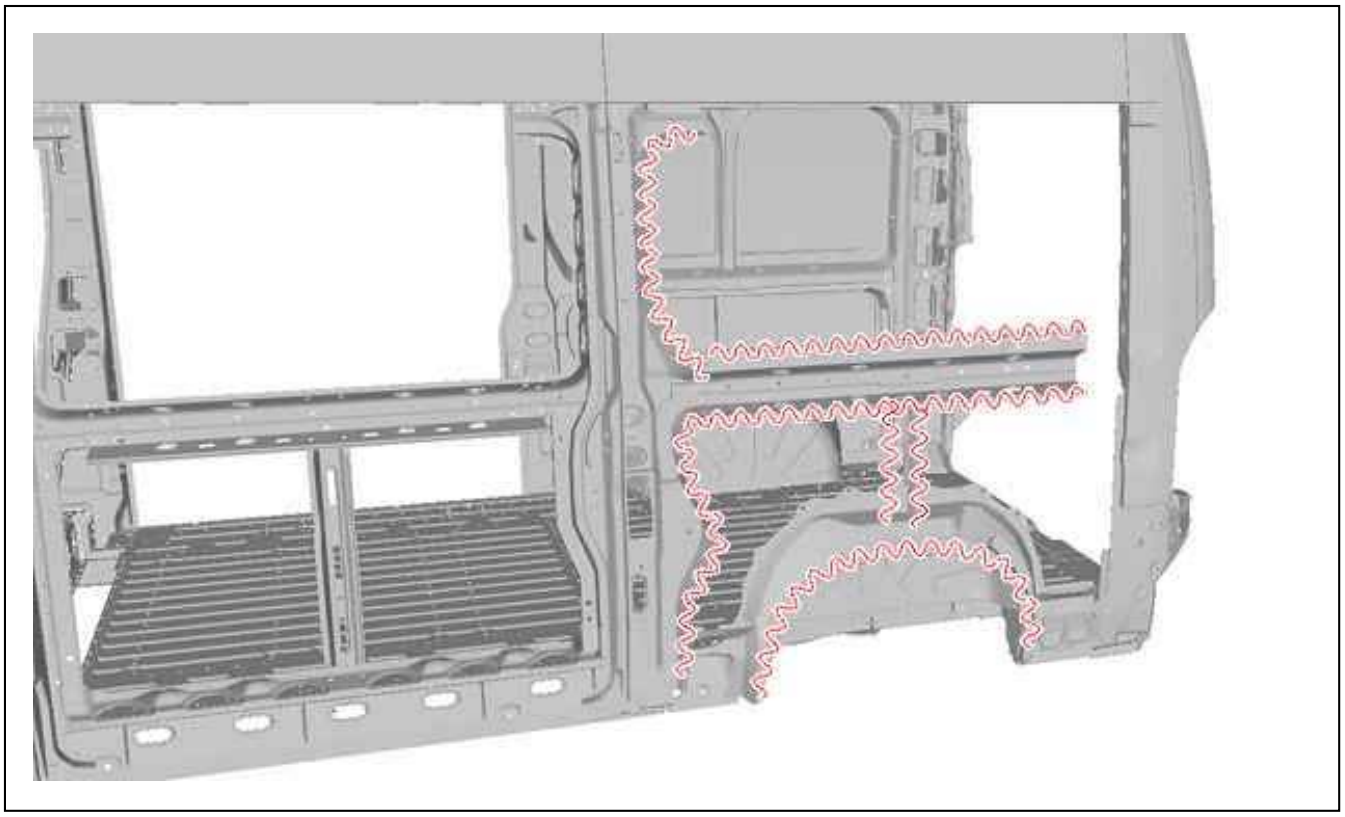

Figure : C4CP1T2D

Figure 14.
Apply a structural shimming adhesive part number " B8" (see the relevant operation).

7. Welding

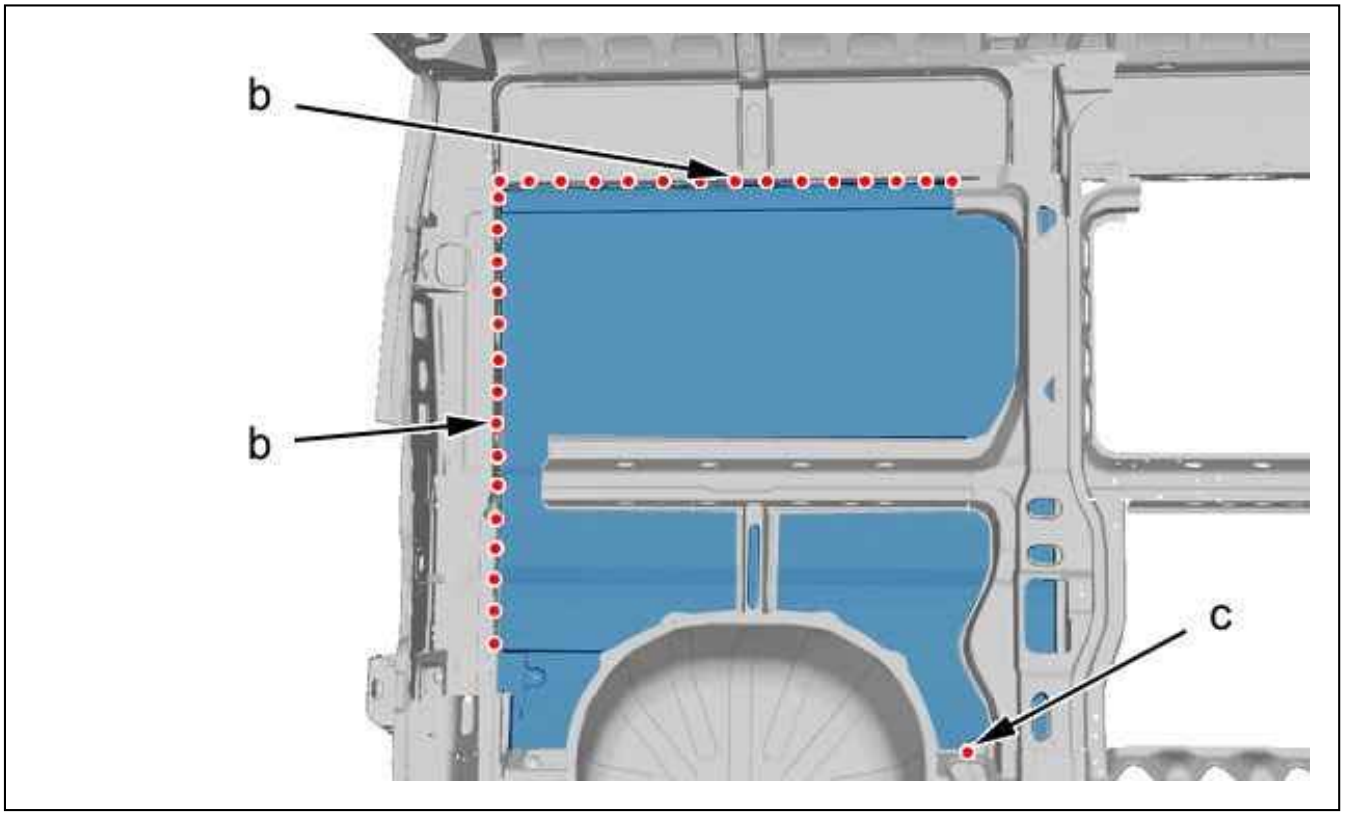

Figure : C4CP1T3D

Figure 15.
Weld with electric spot welds (following "b").
Weld with plug welds (MIG or MAG) (at "c").
Grind the spot welds.

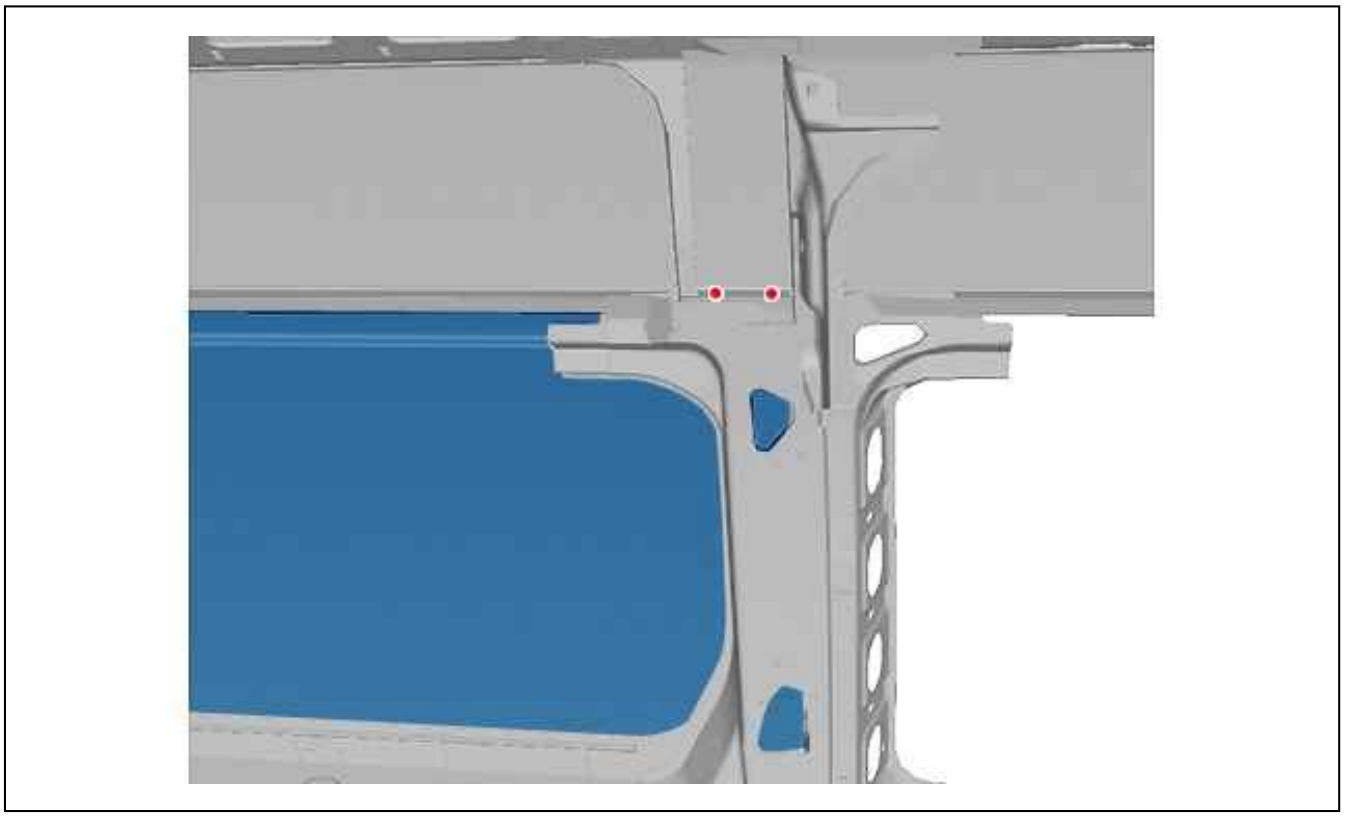

Figure : C4CP1T4D

Figure 16.
Weld with plug welds (MIG or MAG).
Grind the spot welds.

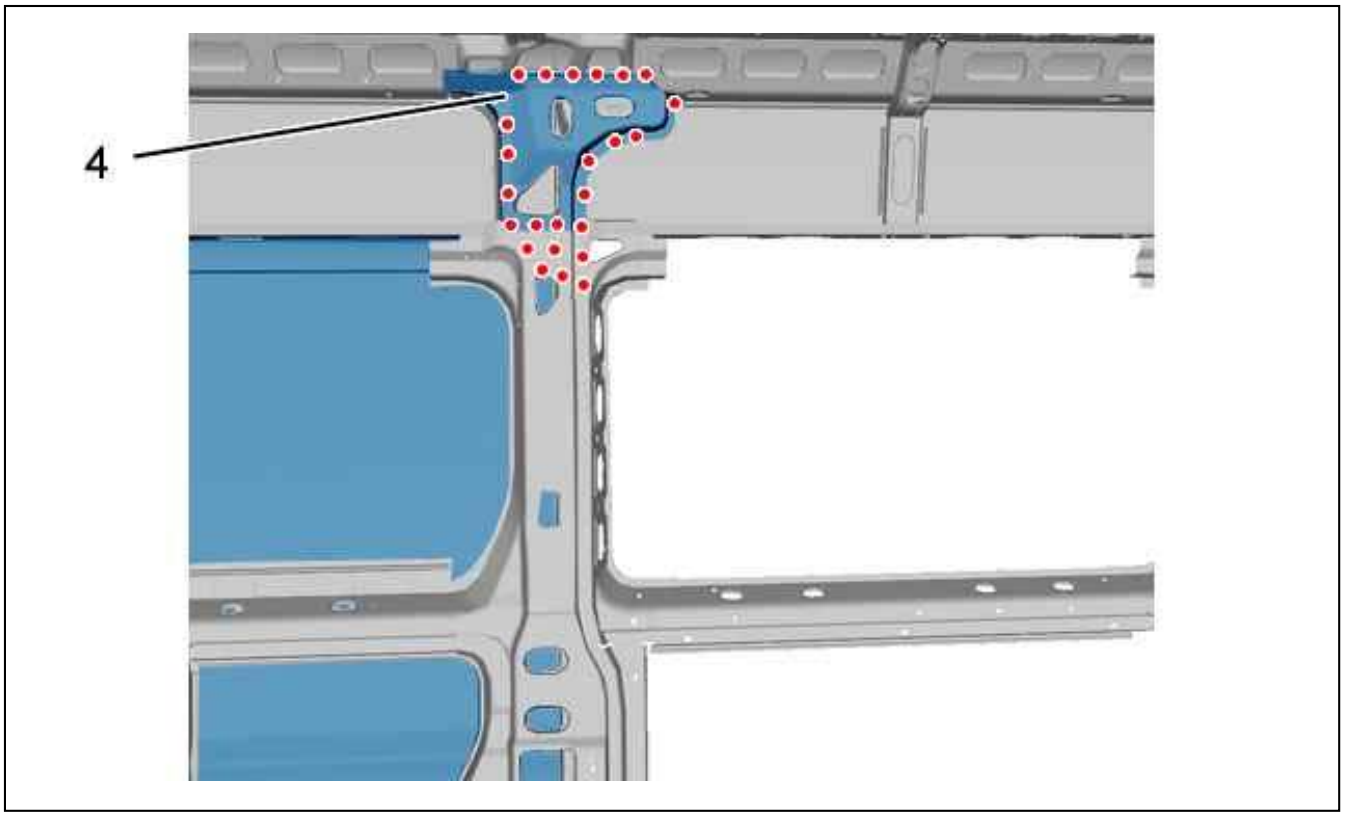

Figure : C4CP1T5D

Figure 17.
Refit the B post upper strengthener (4).
Weld with plug welds (MIG or MAG).
Grind the spot welds.

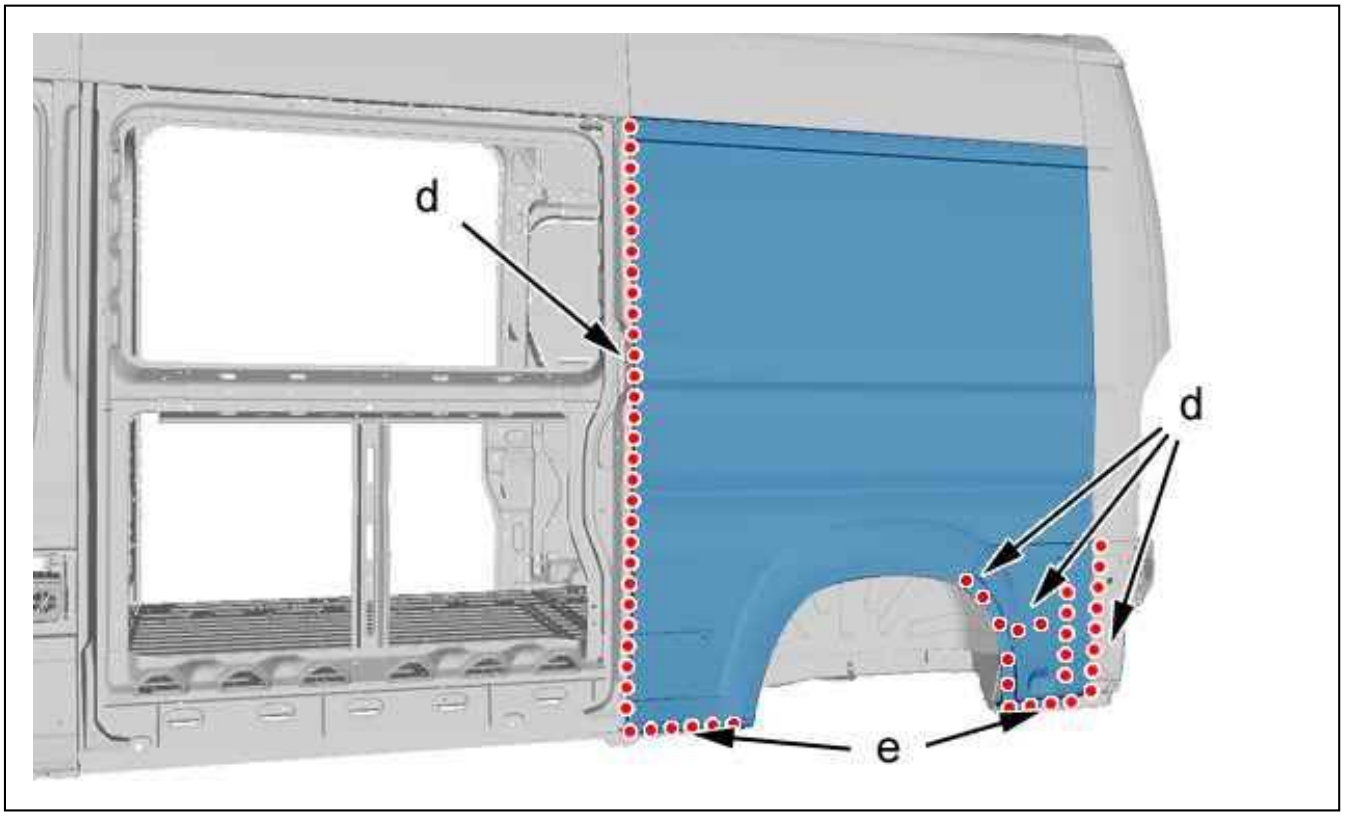

Figure : C4CP1T6D

Figure 18.
Weld with plug welds (MIG or MAG) (following "d").
Grind the spot welds.
Weld with electric spot welds (following "e").

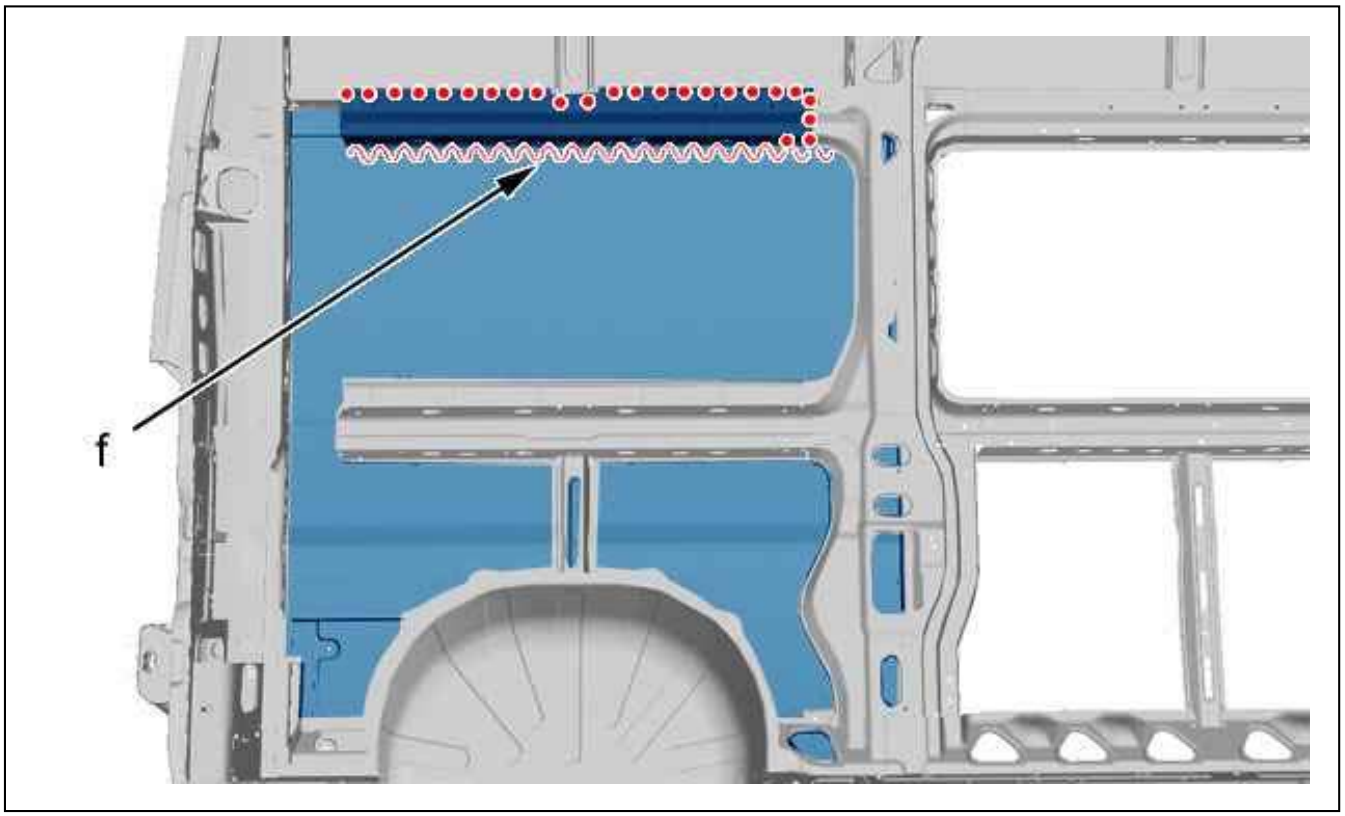

Figure : C4CP1T7D

Figure 19.
Apply a structural shimming adhesive part number " B8" (following "f") (see the relevant operation)..
Weld with plug welds (MIG or MAG).
Grind the spot welds.

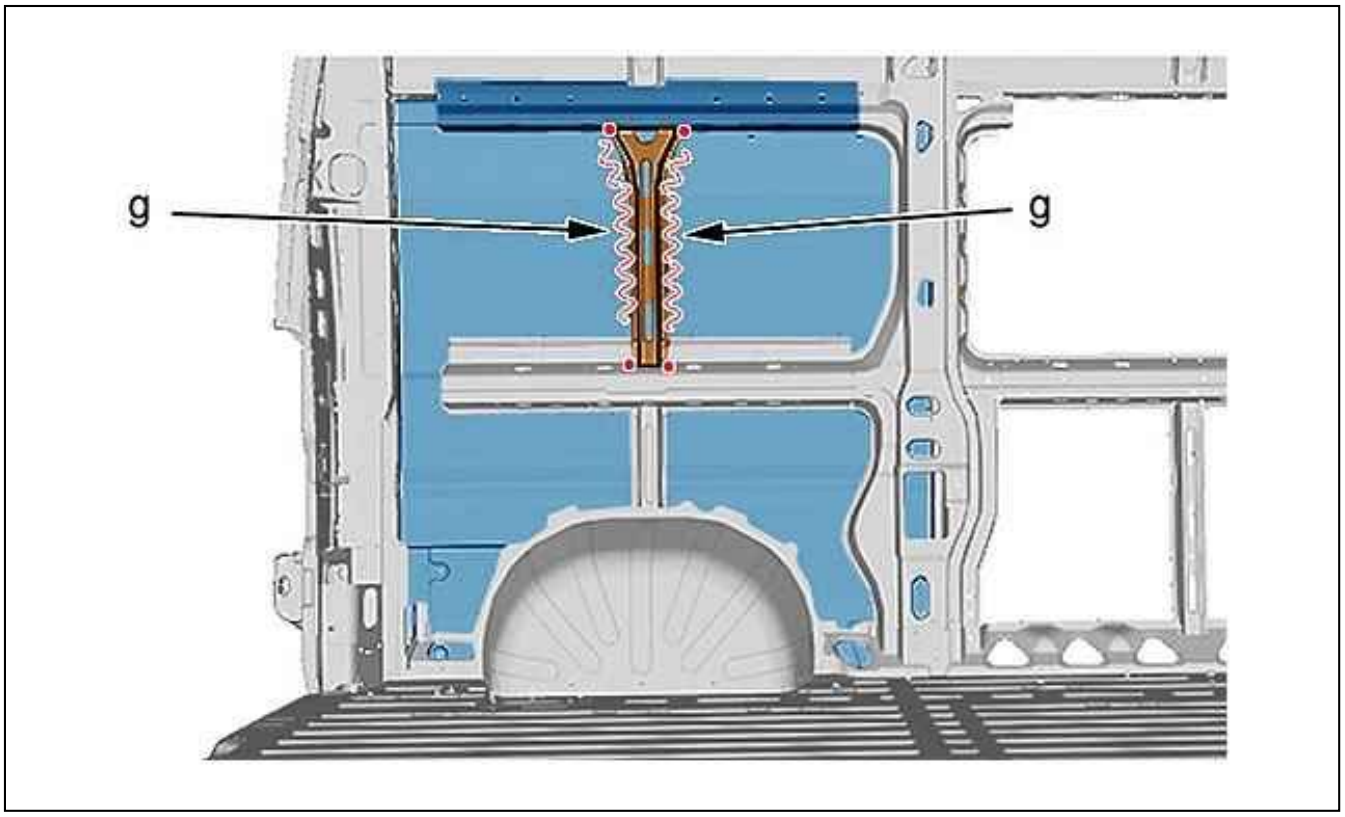

Figure : C4CP1T8D

Figure 20.
Apply a structural shimming adhesive part number " B8" (following "g") (see the relevant operation)..
Weld with plug welds (MIG or MAG).
Grind the spot welds.

8. Sealing

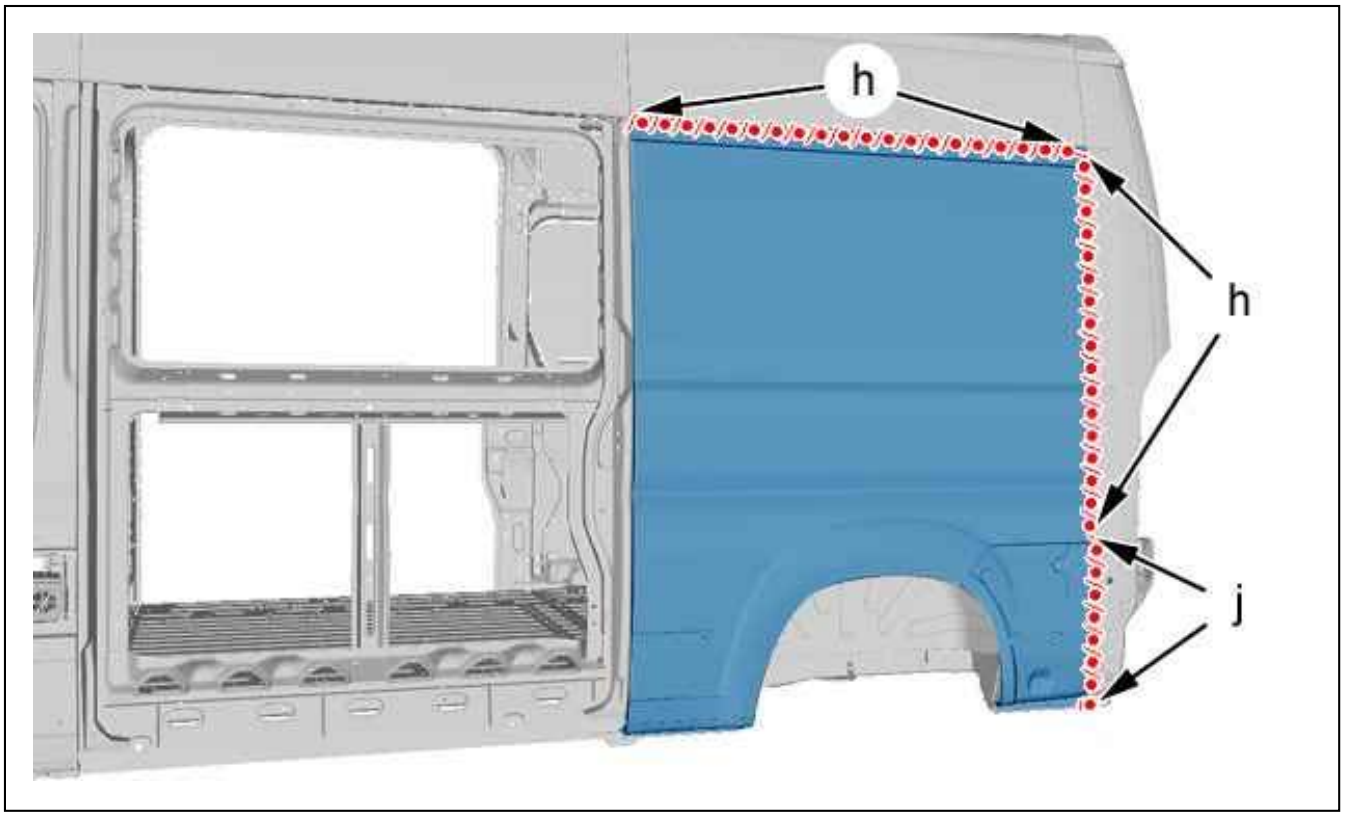

Figure : C4CP1T9D

Figure 21.
Apply a phosphate-print layer on the zone laid bare.
Apply a sealing mastic of type " A4" (following "h") (see the relevant operation).
Apply a sealing mastic of type " A1" (following "j") (see the relevant operation).

9. Protection

Paint then spray into the hollow sections, product index C5, in the repair zone (see the relevant operation).
Apply an anti-chip layer (see the relevant operation).

10. Reinitialisation

Reconnect the battery.

ESSENTIAL : Perform the operations to be carried out following reconnection of the battery.

REPLACEMENT : LOWER PART OF THE FRONT LEFT EXTERIOR PILLAR

ESSENTIAL : All of the stripped surfaces must be protected by means of the approved electrolytic rezincing process . (see the relevant operation).

ESSENTIAL : Observe the elementary rules of hygiene and safety (wear a face mask to protect against fumes and vapour - work in a well ventilated space).

1. Additional operations

Disconnect the battery.
Replace the fuel flap.
Removing - Refitting :

- Fuel tank
- Front door aperture seal

Release the wiring harnesses.

2. Identification of the replacement parts



Figure : C4CP1QSD

Figure 1.
Lower part of the front left exterior pillar.

3. Preparation of the new part



Figure : C4CP1QTD

Figure 2.
Mark then drill to Ø 6 mm for later plug welding (8 holes).
Prepare the mating edges .

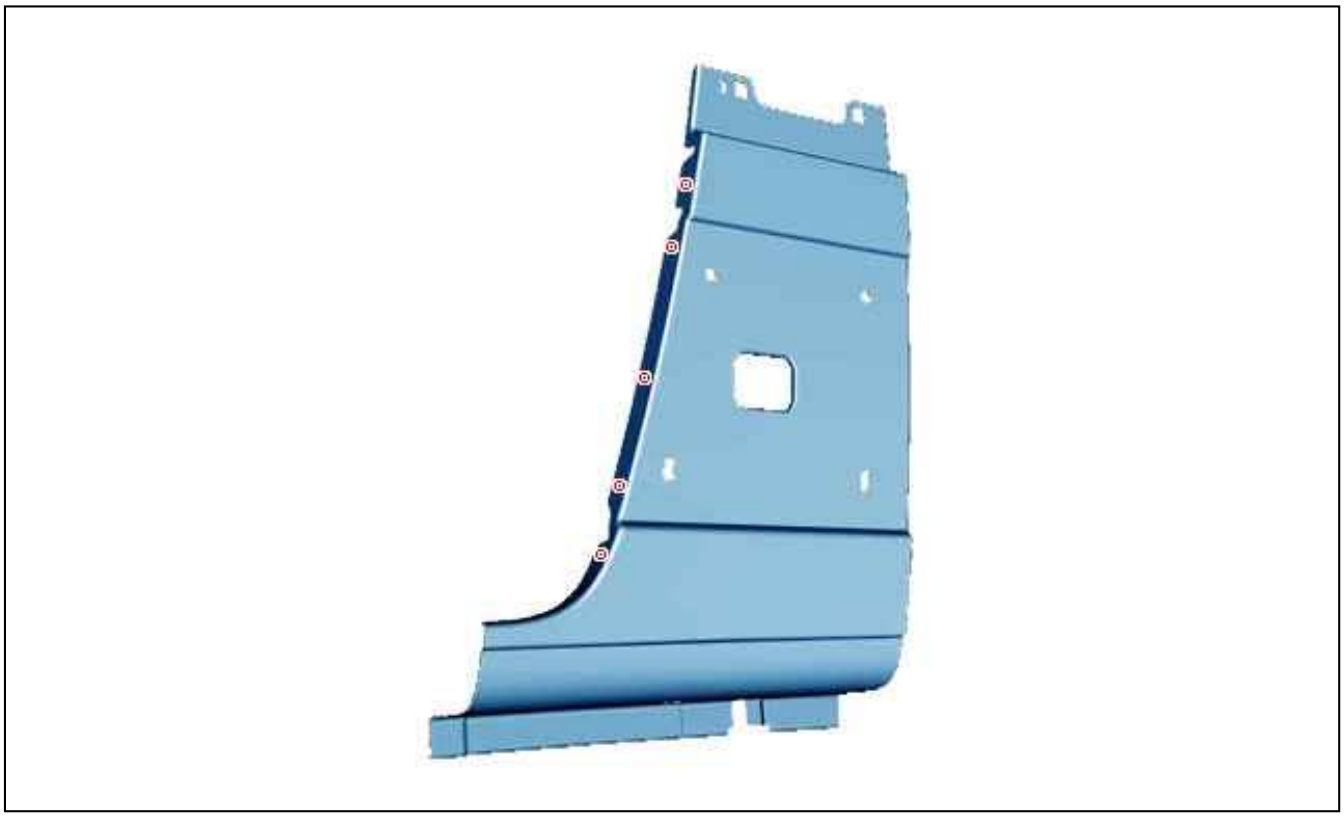

Figure : C4CP1QUD

Figure 3.
Mark then drill to Ø 6 mm for later plug welding (5 holes).
Prepare the mating edges .

4. Cutting out

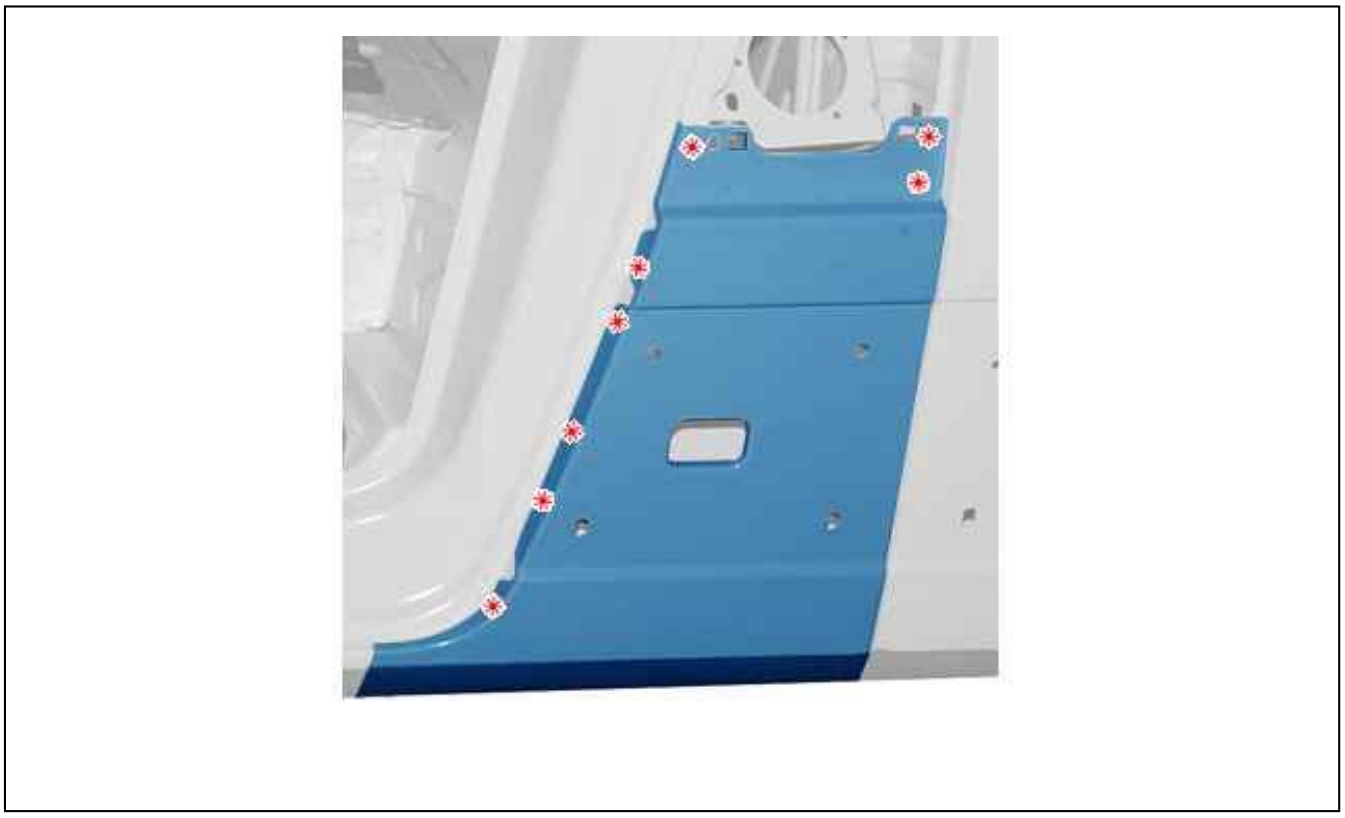

Figure : C4CP1QVD

Figure 4.
Cut out the spot welds .

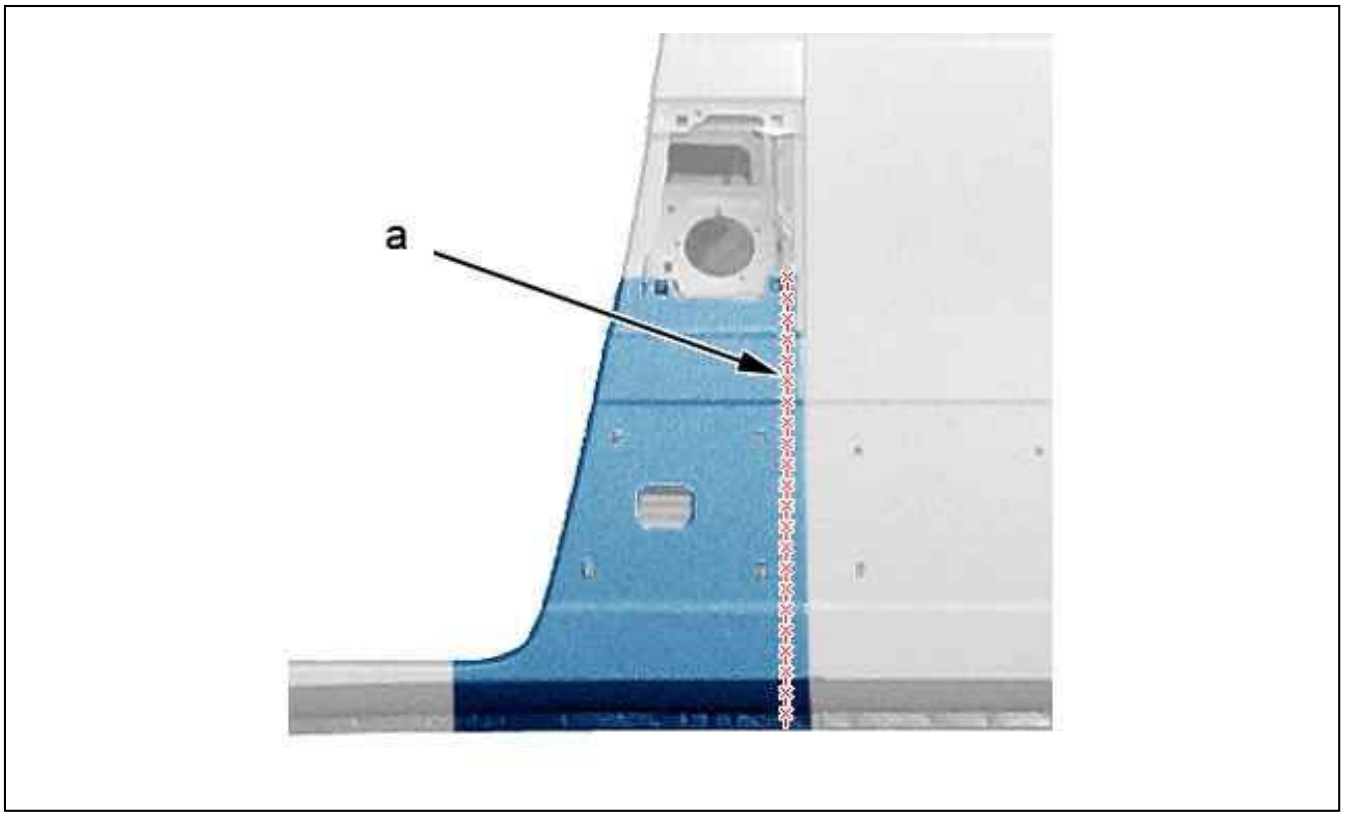

Figure : C4CP1QWD

Figure 5.
Mark then cut (at "a").

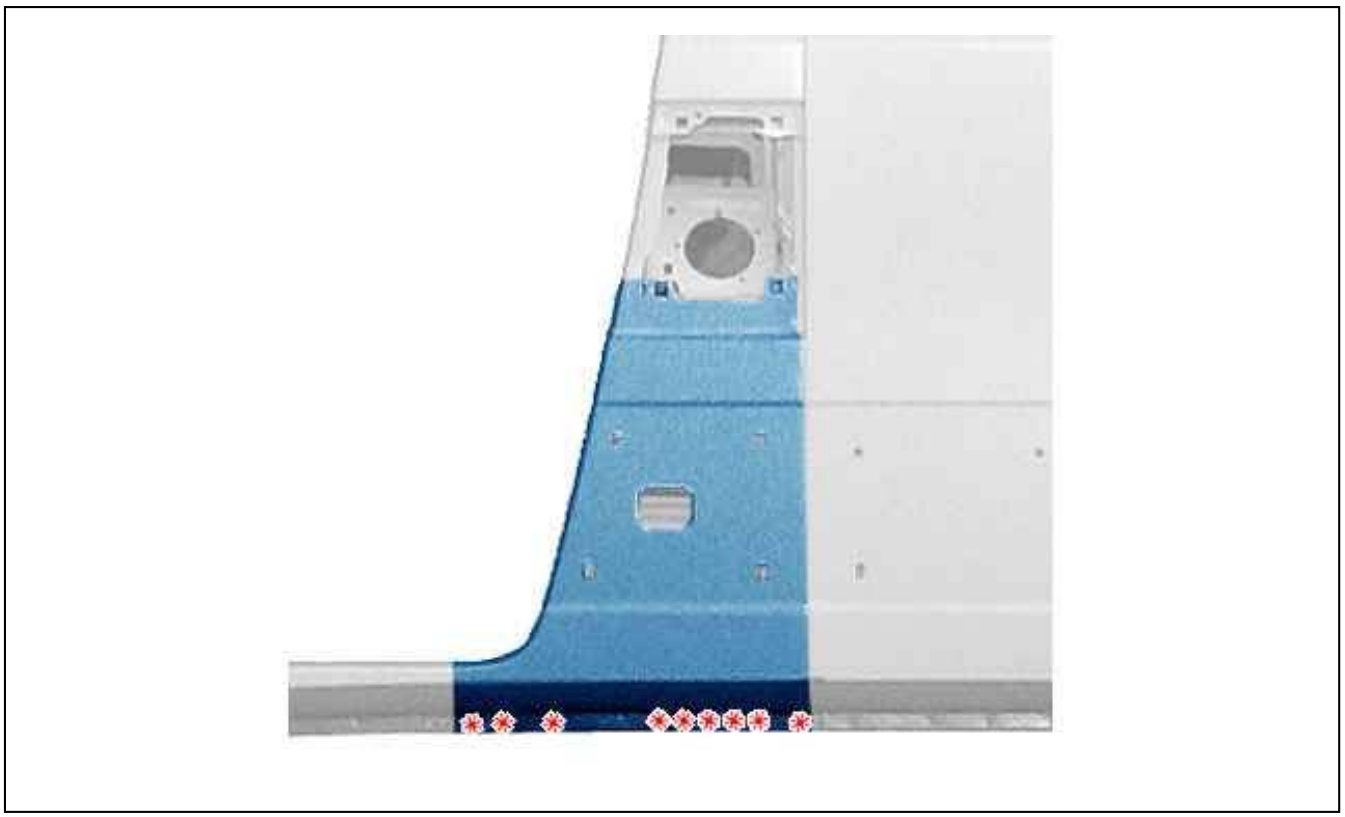

Figure : C4CP1QXD

Figure 6.

Cut out the spot welds .
Remove the lower part of the partial front LH exterior pillar.

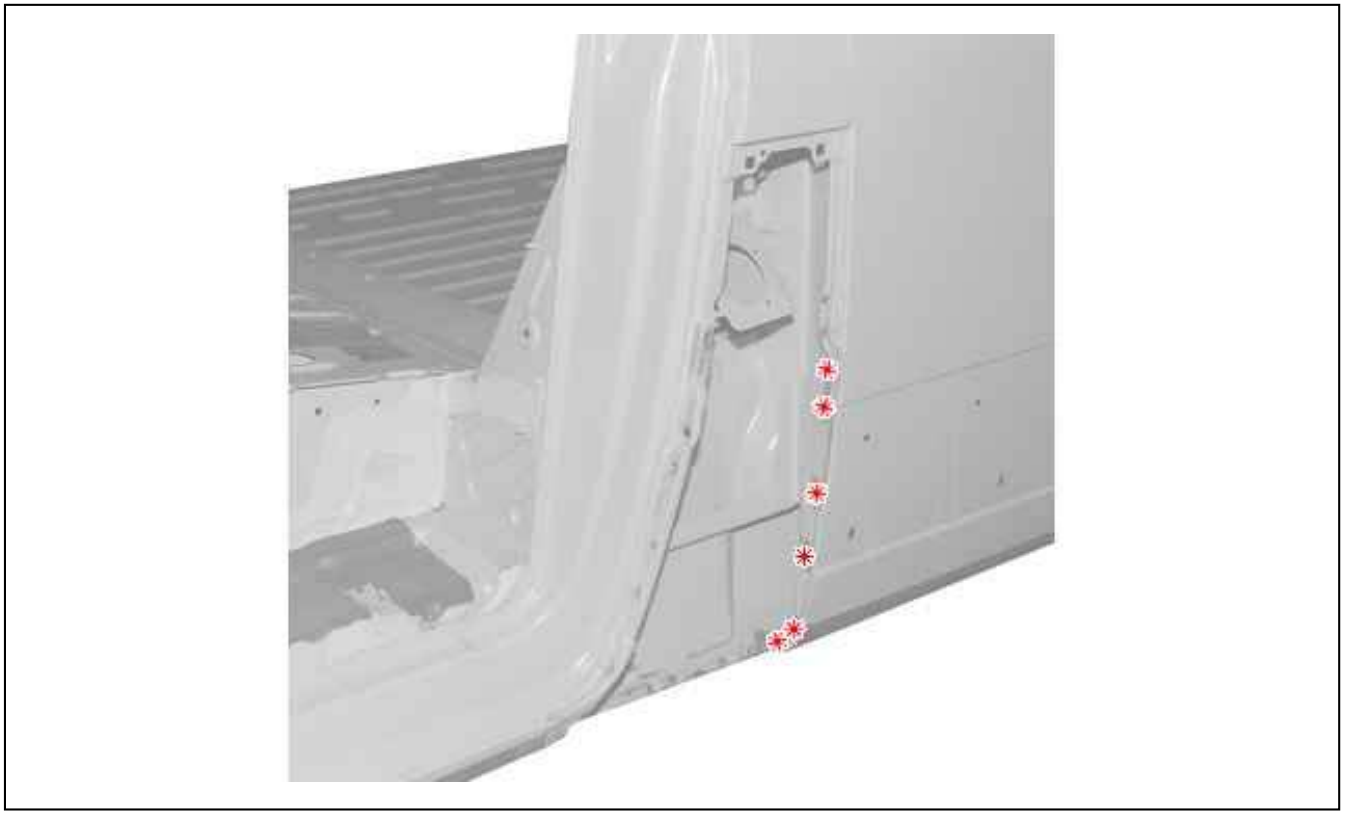

Figure : C4CP1QYD

Figure 7.
Cut out the spot welds .
Remove the remainder of the component.

5. Bodywork cleaning and preparation

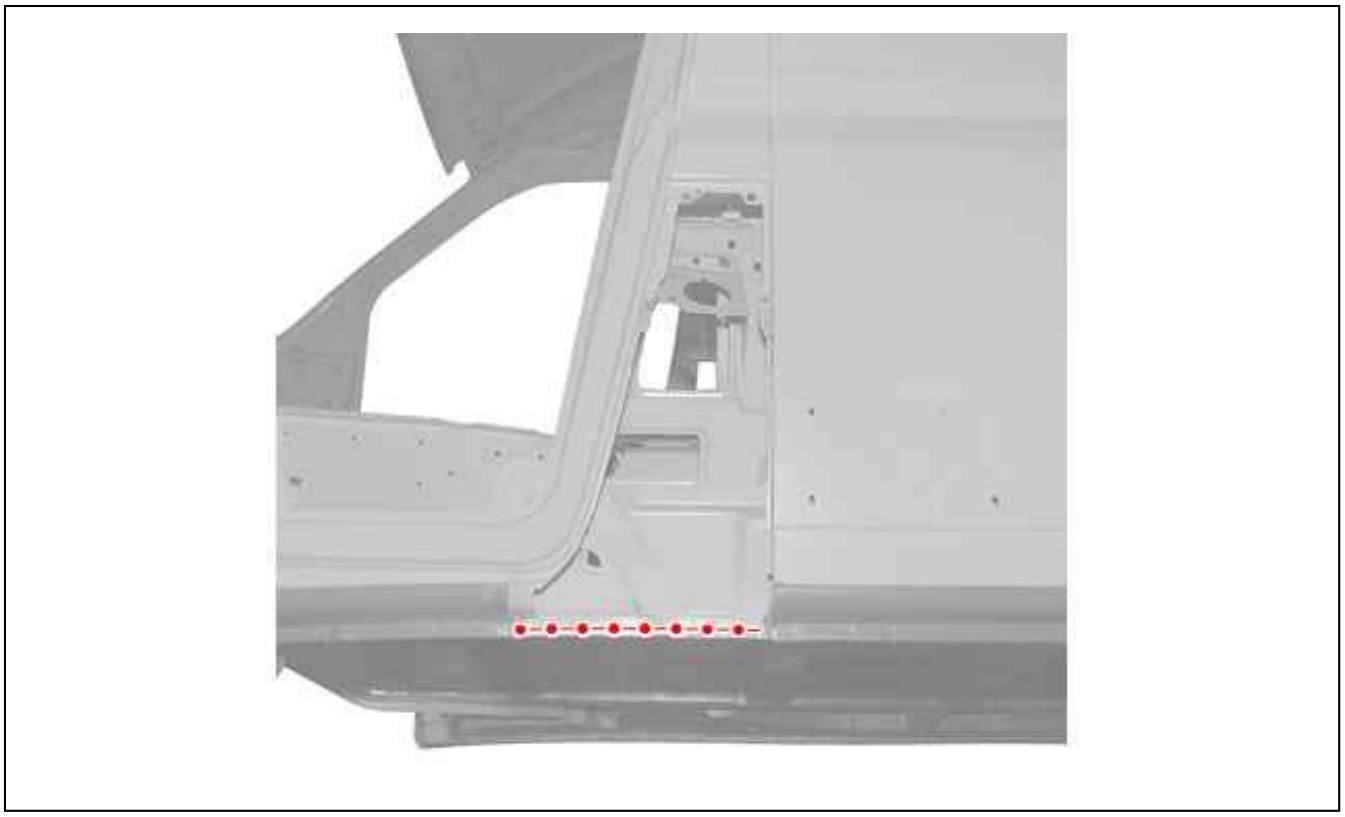

Figure : C4CP1QZD

Figure 8.
Prepare the mating edges .
Align the mating edges and protect them with a weldable primer.

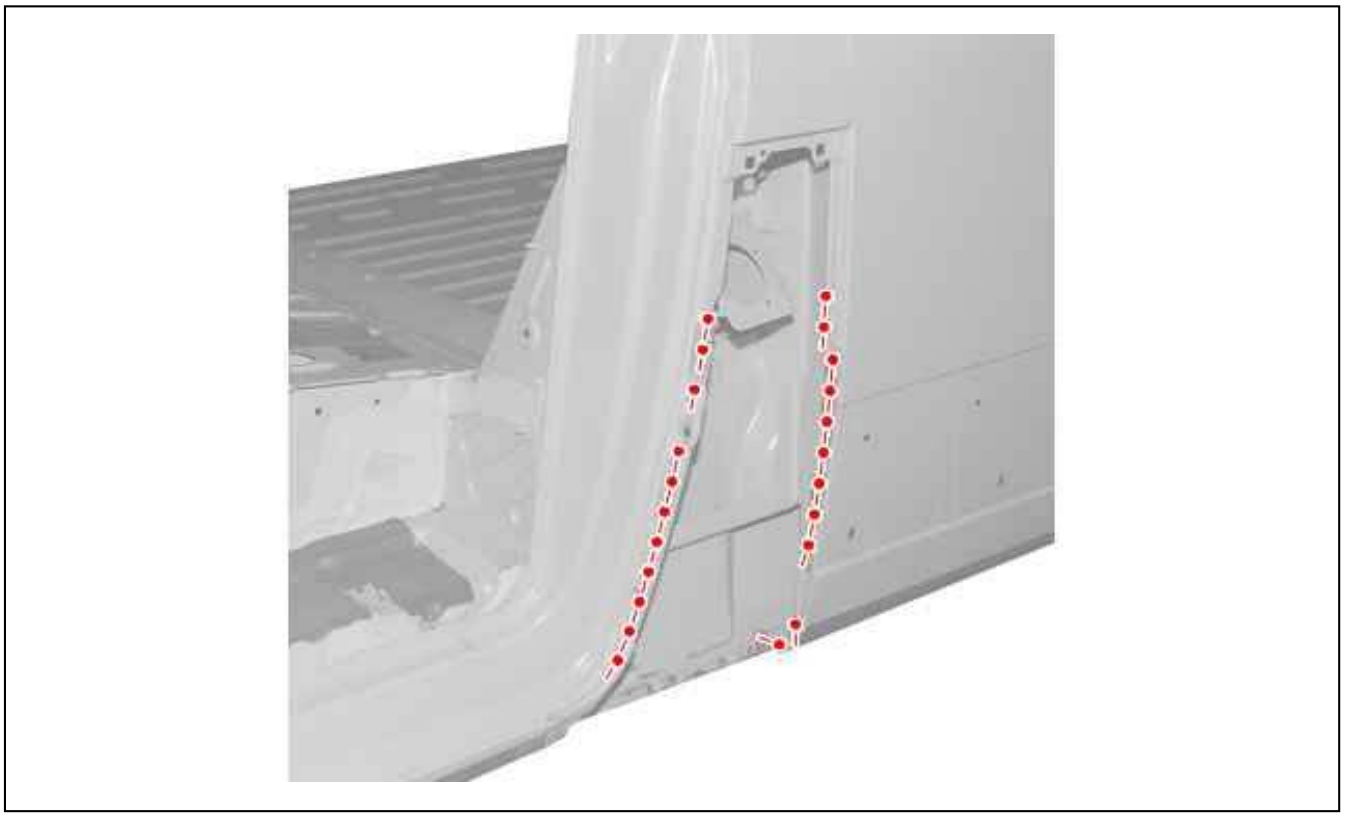

Figure : C4CP1R0D

Figure 9.
Prepare the mating edges .
Align the mating edges and protect them with a weldable primer.

6. Adjustment

Present the component for adjustment.
Check the fits and clearances (see the relevant operation).

7. Welding

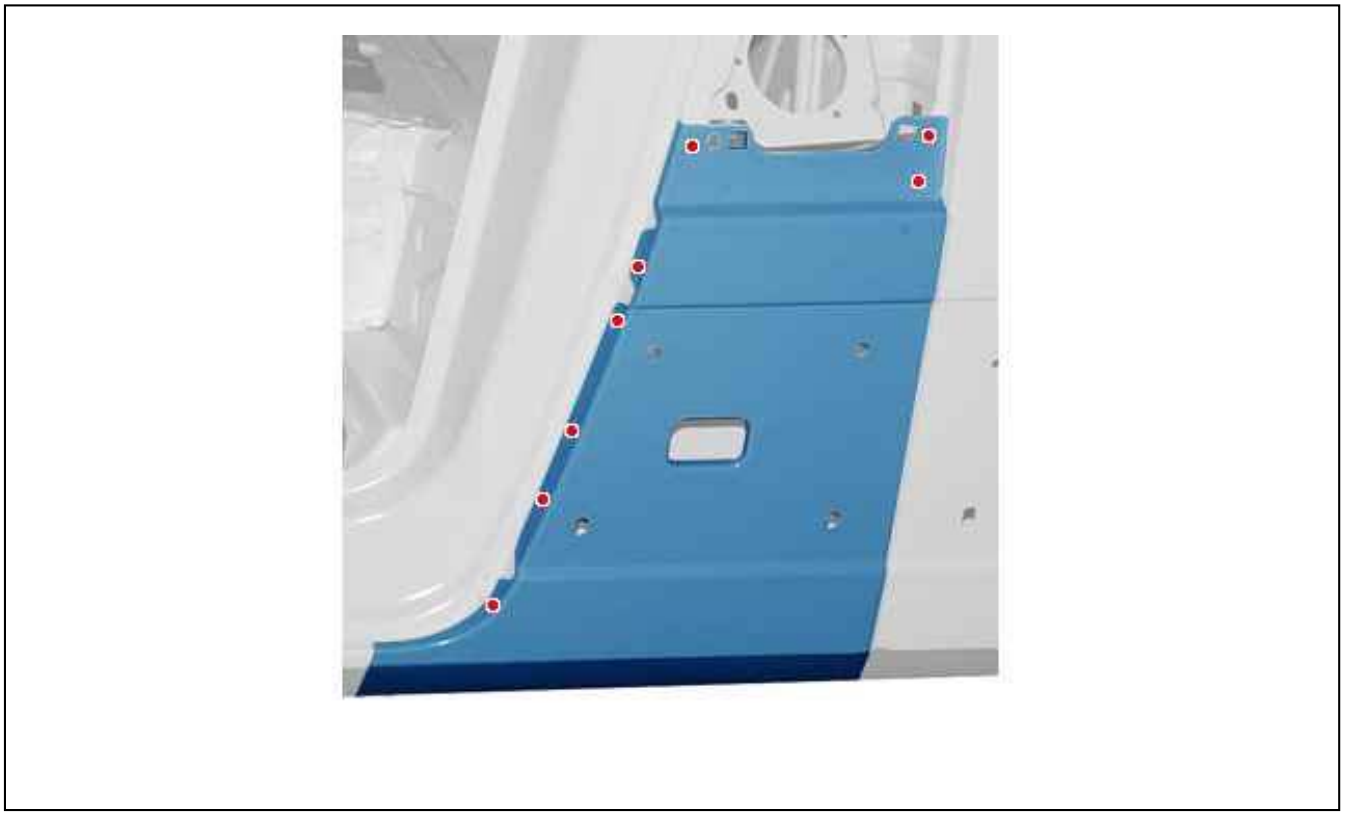

Figure : C4CP1R1D

Figure 10.
Weld with MIG or MAG spot welds.
Grind the plug welds.

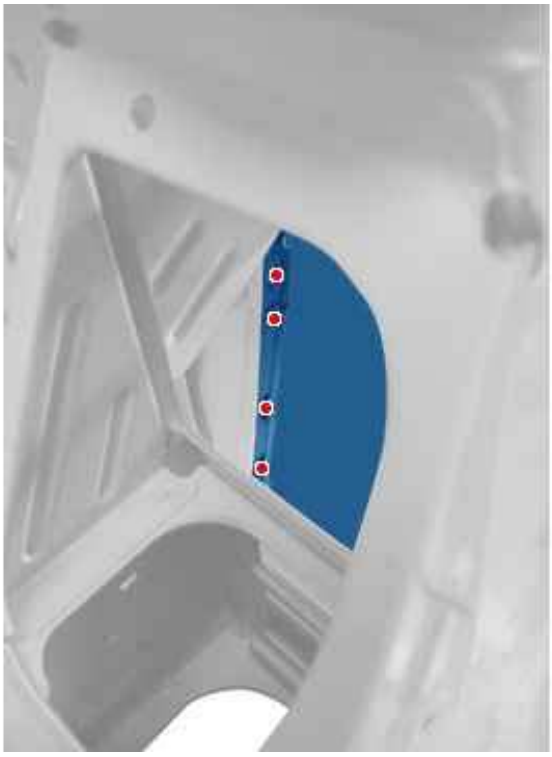

Figure : C4CP1R2D

Figure 11.
Weld with MIG or MAG spot welds.
Grind the plug welds.



Figure : C4CP1R3D

Figure 12.
Weld with electric spot welds.

8. Sealing



Figure : C4CP1R4D

Figure 13.
Apply a phosphate-print layer to the zones laid bare.
Apply a sealing mastic of type " A4" (see the relevant operation).

9. Protection

Paint then spray into the hollow sections, product index C5, in the repair zone (see the relevant operation).
Apply an anti-chip layer (see the relevant operation).

10. Reinitialisation

Reconnect the battery.

ESSENTIAL : Perform the operations to be carried out following reconnection of the battery.

REPLACEMENT : FRONT LONGERON CORE

ESSENTIAL : All of the stripped surfaces must be protected by means of the approved electrolytic rezincing process . (see the relevant operation).

ESSENTIAL : Observe the elementary rules of hygiene and safety (wear a face mask to protect against fumes and vapour - work in a well ventilated space).

1. Additional operations

Disconnect the battery.
Partial replacement of the cab door frame (see the relevant operation).

2. Identification of the replacement parts

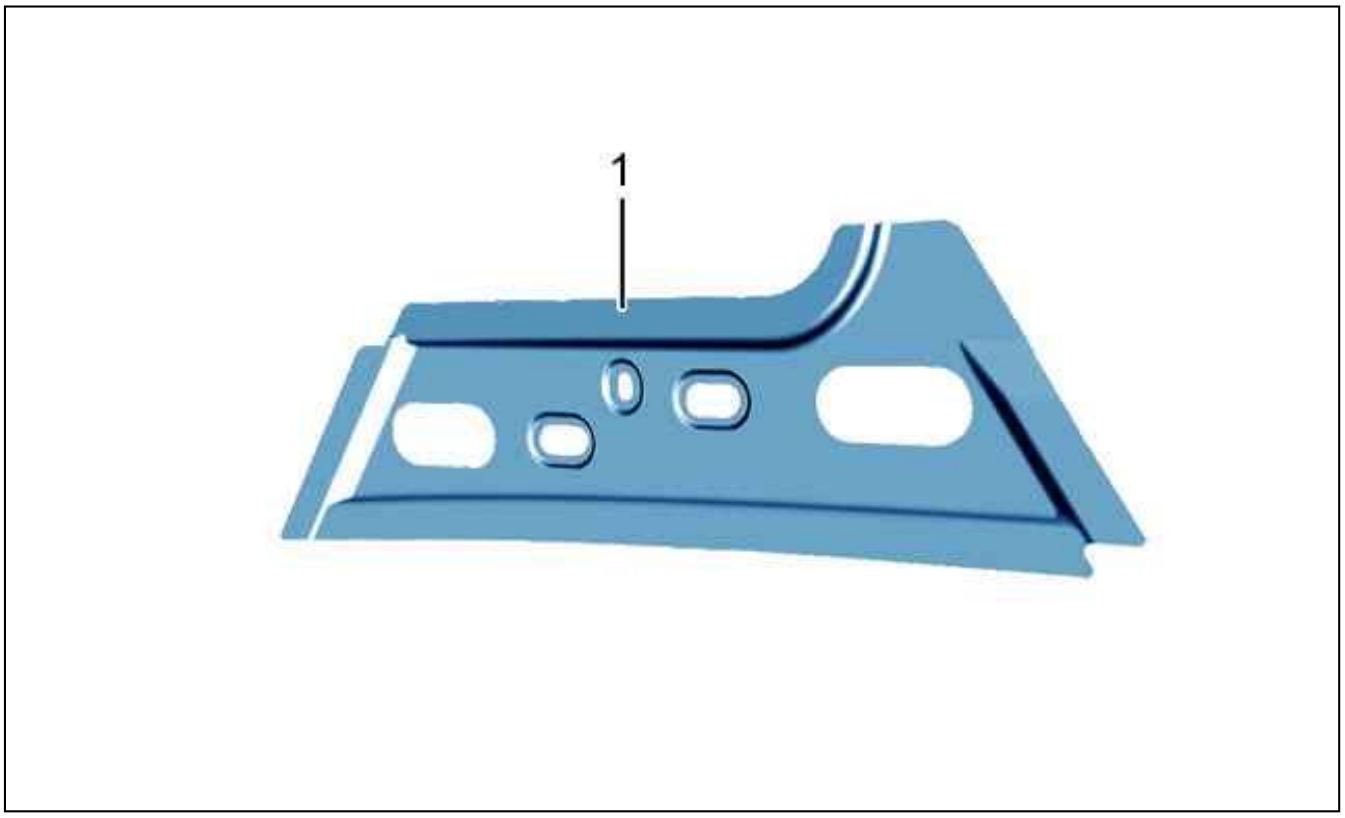

Figure : C4CP1RCD

Figure 1.
Front longeron core.

3. Preparation of the new part

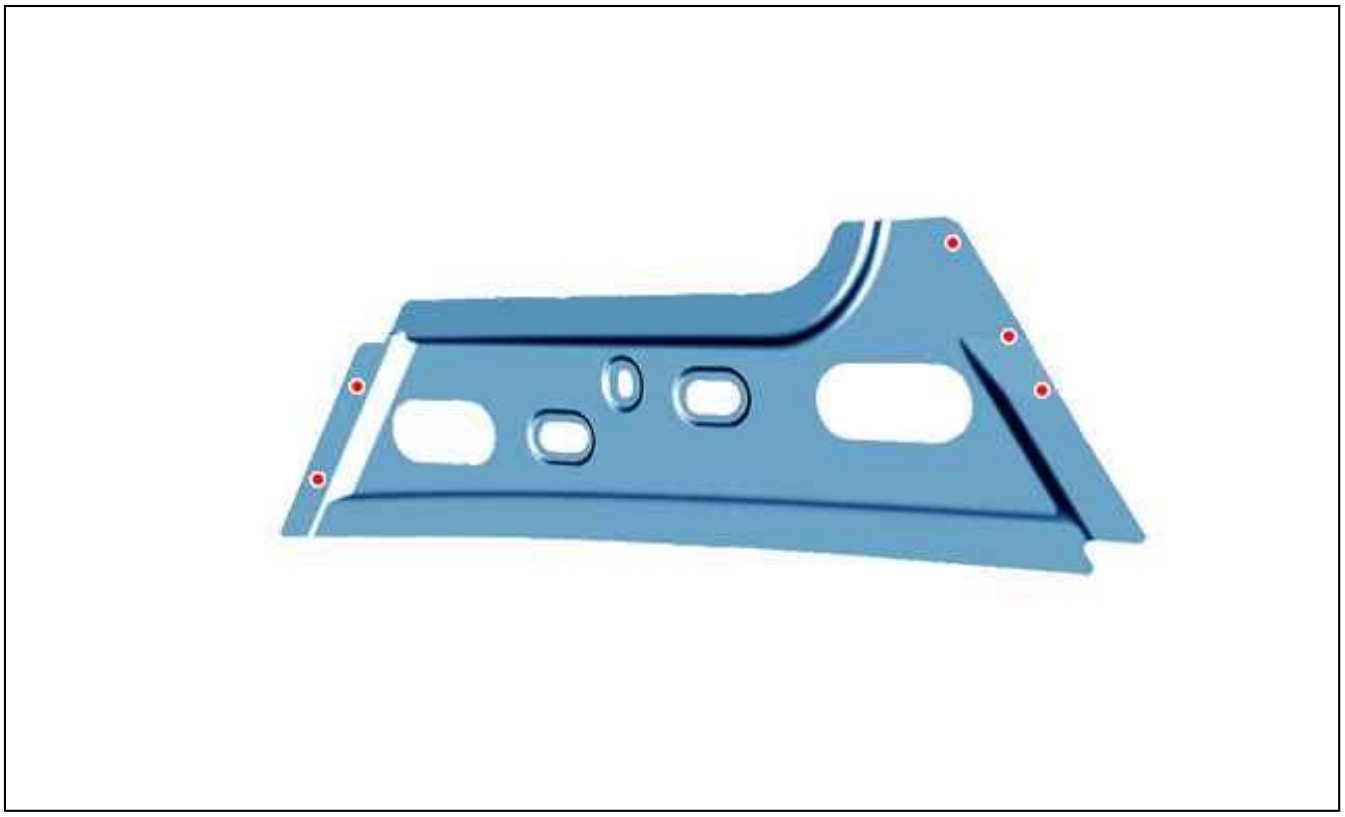

Figure : C4CP1RDD

Figure 2.
Mark then drill to Ø 6 mm for later plug welding (5 holes).
Prepare the mating edges .

4. Cutting out

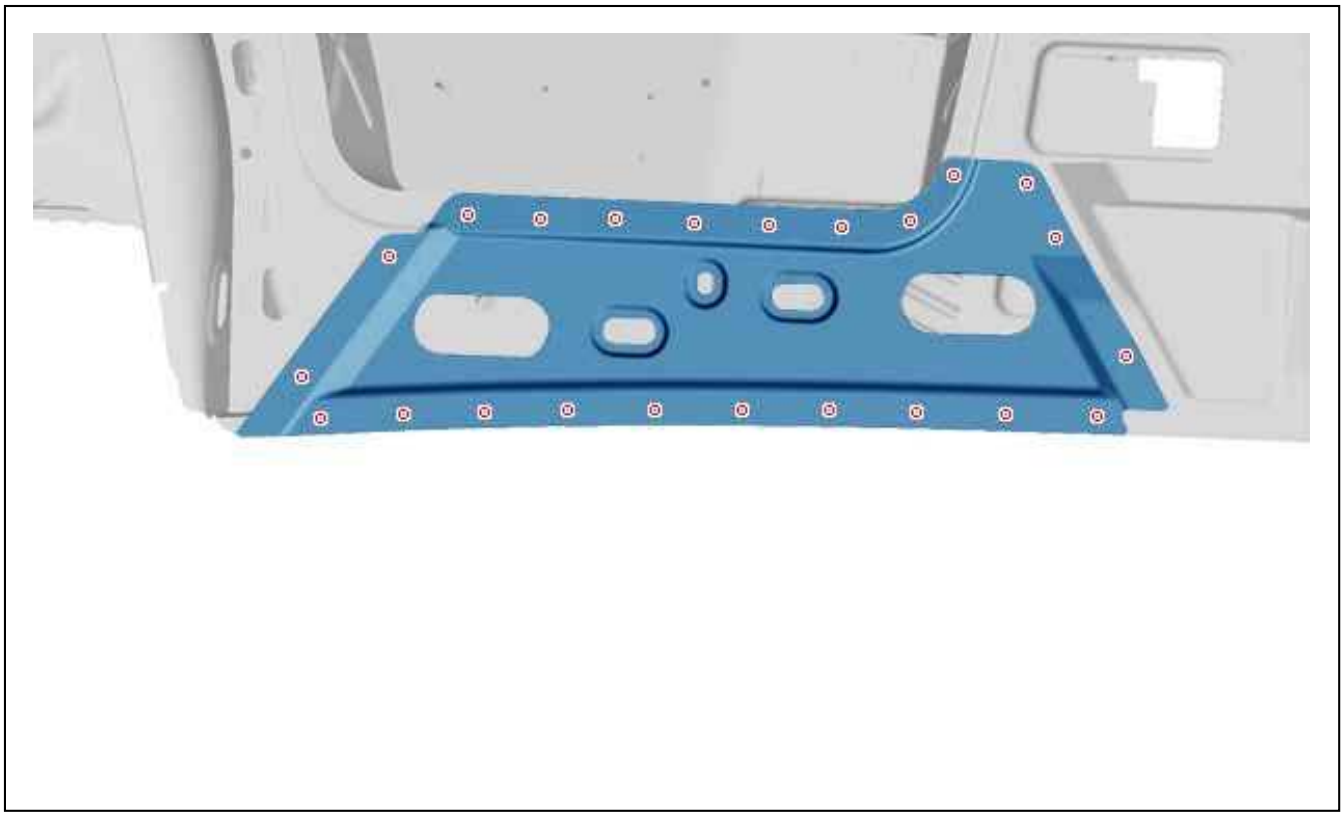

Figure : C4CP1RED

Figure 3.
Cut out the spot welds .
Remove the longeron closing plate Before .

5. Bodywork cleaning and preparation

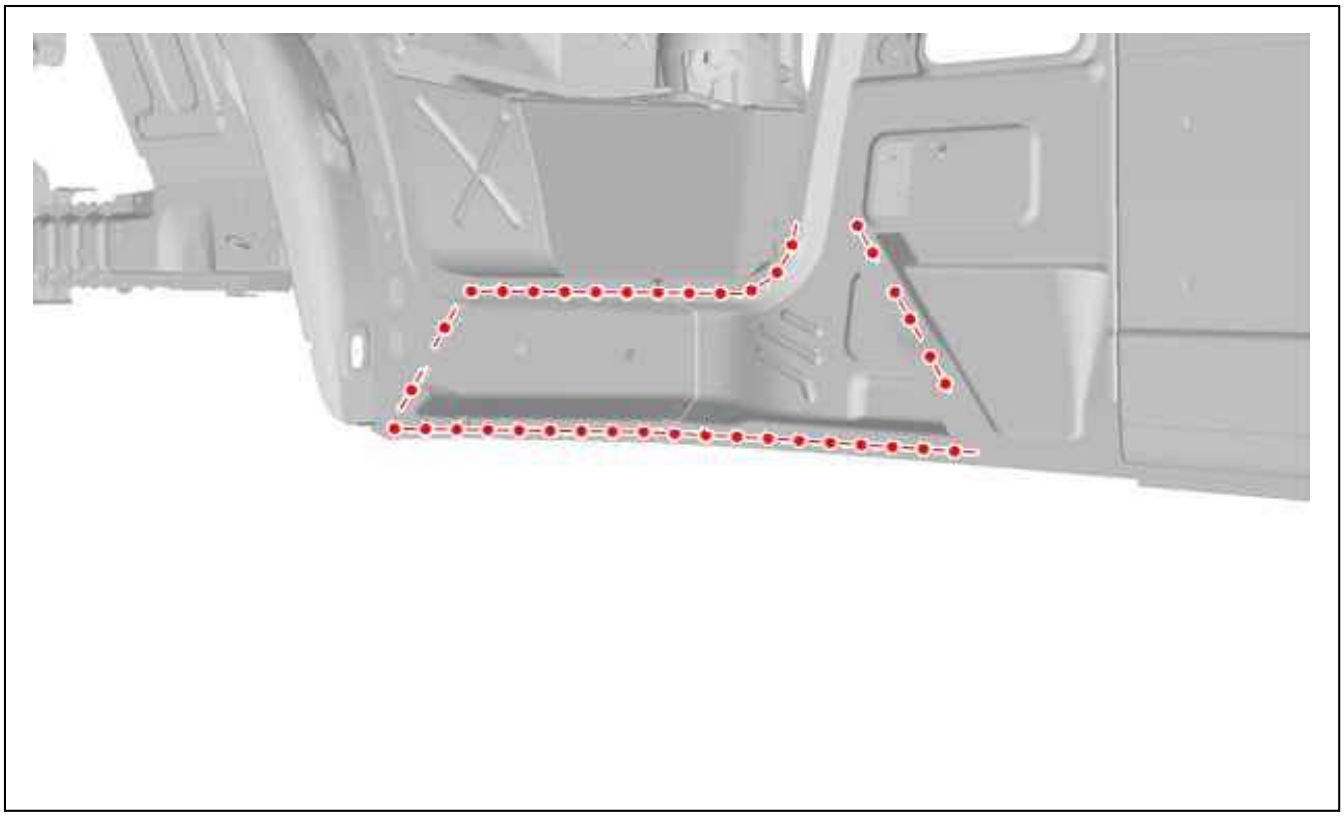

Figure : C4CP1RFD

Figure 4.
Prepare the mating edges .
Align the mating edges and protect them with a weldable primer.

6. Adjustment

Present the component for adjustment.
Check the fits and clearances (see the relevant operation).

7. Welding

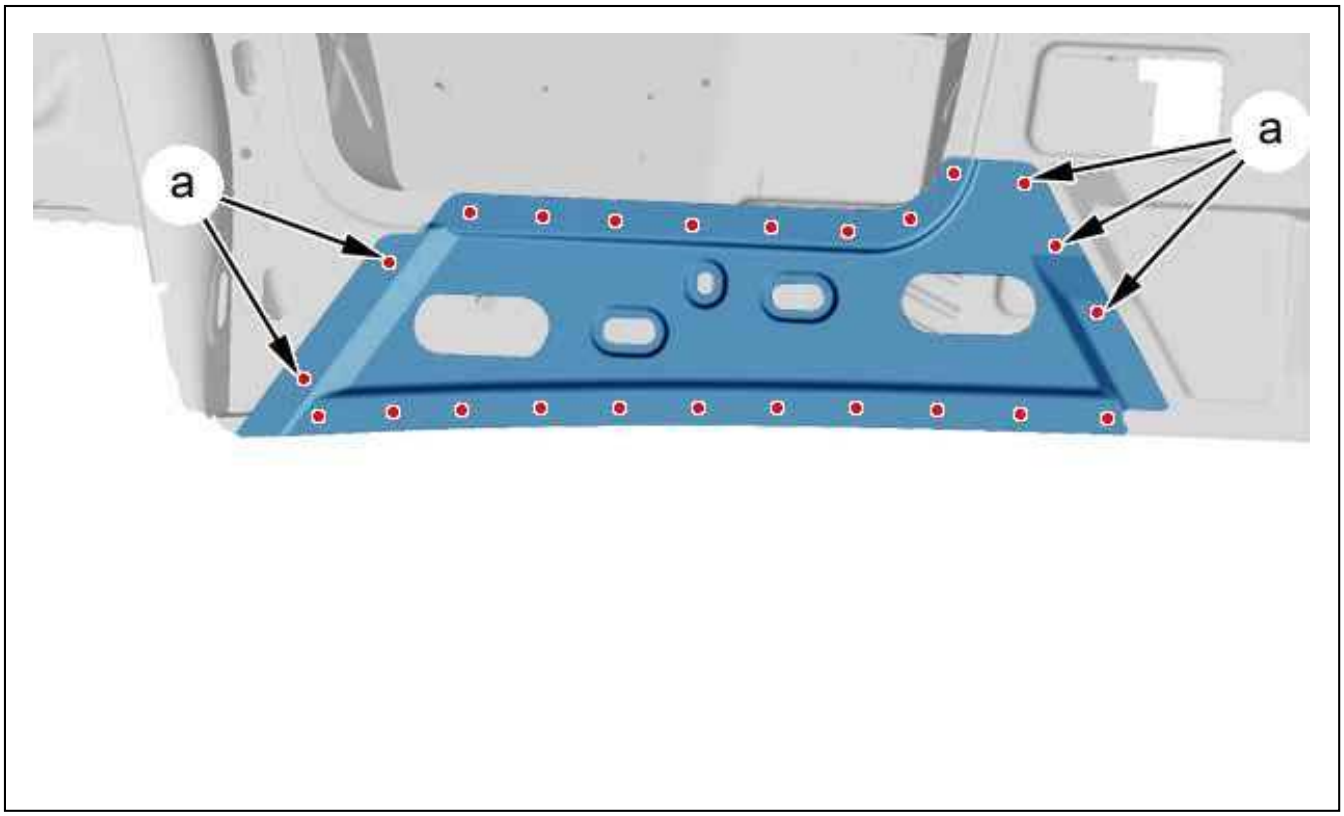

Figure : C4CP1RGD

Figure 5.
Weld with MIG or MAG spot welds.
Grind the plug welds.
Weld with electric spot welds.

8. Protection

Paint then spray into the hollow sections, product index C5, in the repair zone (see the relevant operation).

9. Reinitialisation

Reconnect the battery.

ESSENTIAL : Perform the operations to be carried out following reconnection of the battery.

REPLACEMENT : PART CAB DOOR FRAME

ESSENTIAL : Observe the safety and cleanliness recommendations .

ESSENTIAL : Observe the precautions to be taken for the pre-tensioning components .

CAUTION : All of the stripped surfaces must be protected by means of the approved electrolytic rezincing process .

CAUTION : The number of spot welds necessary for the assembly of a new part must be identical to the number o spot welds fixing the original part.

1. Information

Types of weld bead by electric arc procedure on this component.
MAG welding with steel rod and used with active gas.

2. Tooling

tool	Reference	Designation
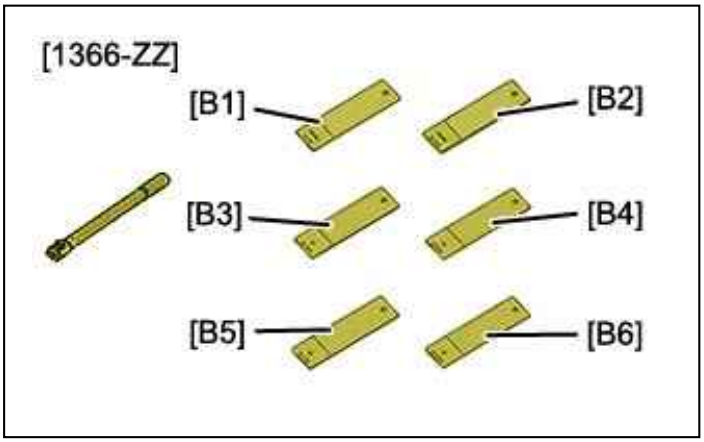 Figure : E5AH002T	[1366-ZZ]	Toolkit for testing electric spot welds
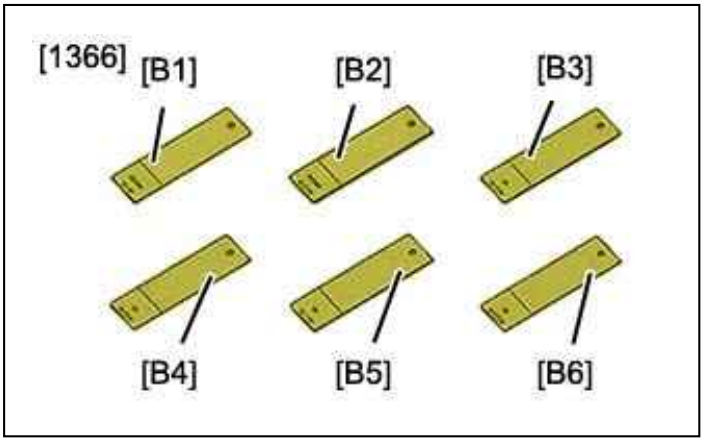	[1366]	Samples for testing electric spot welds

Figure : E5AH003T		
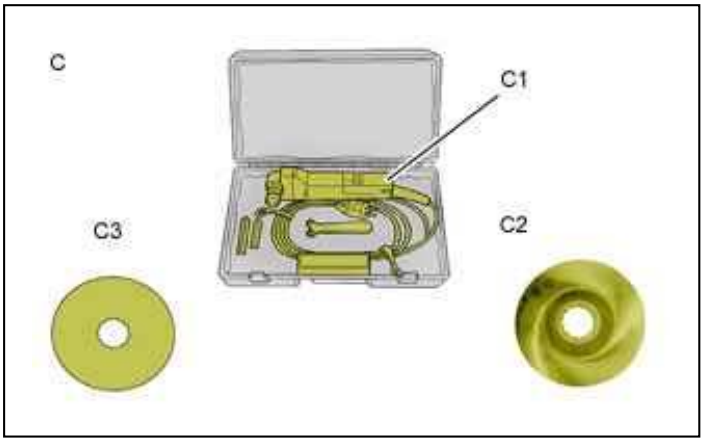 Figure : E5AH005T		Electric knife kit FEIN -"C1" electric knife -"C2" FEIN offset hub saw blade -"C3" Blade no. 103
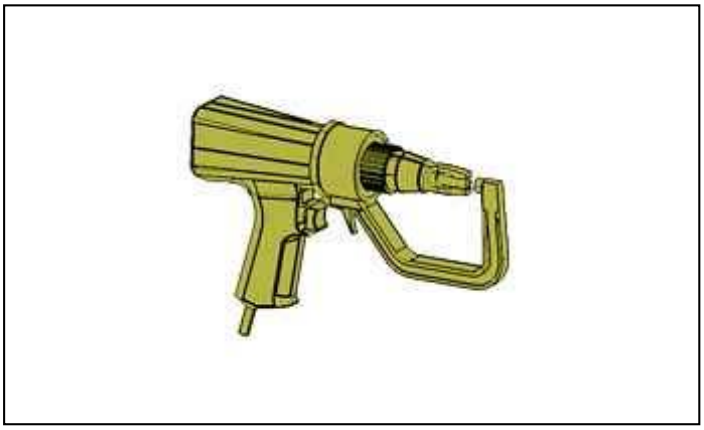 Figure : E5AH004T		Swan’s neck drill for cutting out electric spot welds

3. Preliminary operations

Deactivate the pyrotechnic systems .

Disconnect the battery.

Remove :

- The front wing
- The front door
- The front bumper
- The windscreen
- The fascia
- The front door aperture seal
- The gutter seal

Remove the trim :

- The partial front floor
- The front pillar

Release the wiring harnesses.

4. Location : Replacement part

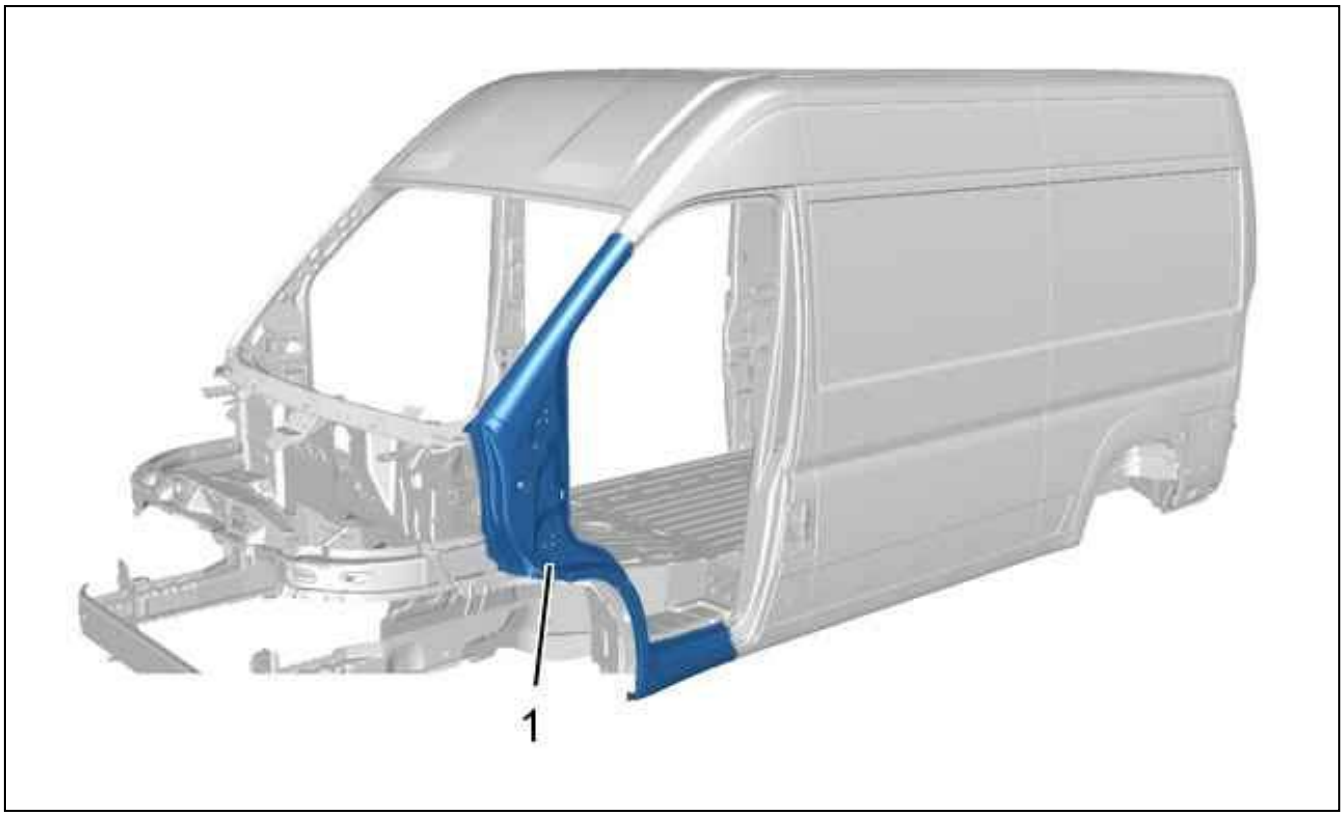

Figure : C4CH3SRD

Reference	Designation
(1)	Cab door frame

5. Identification : Replacement part

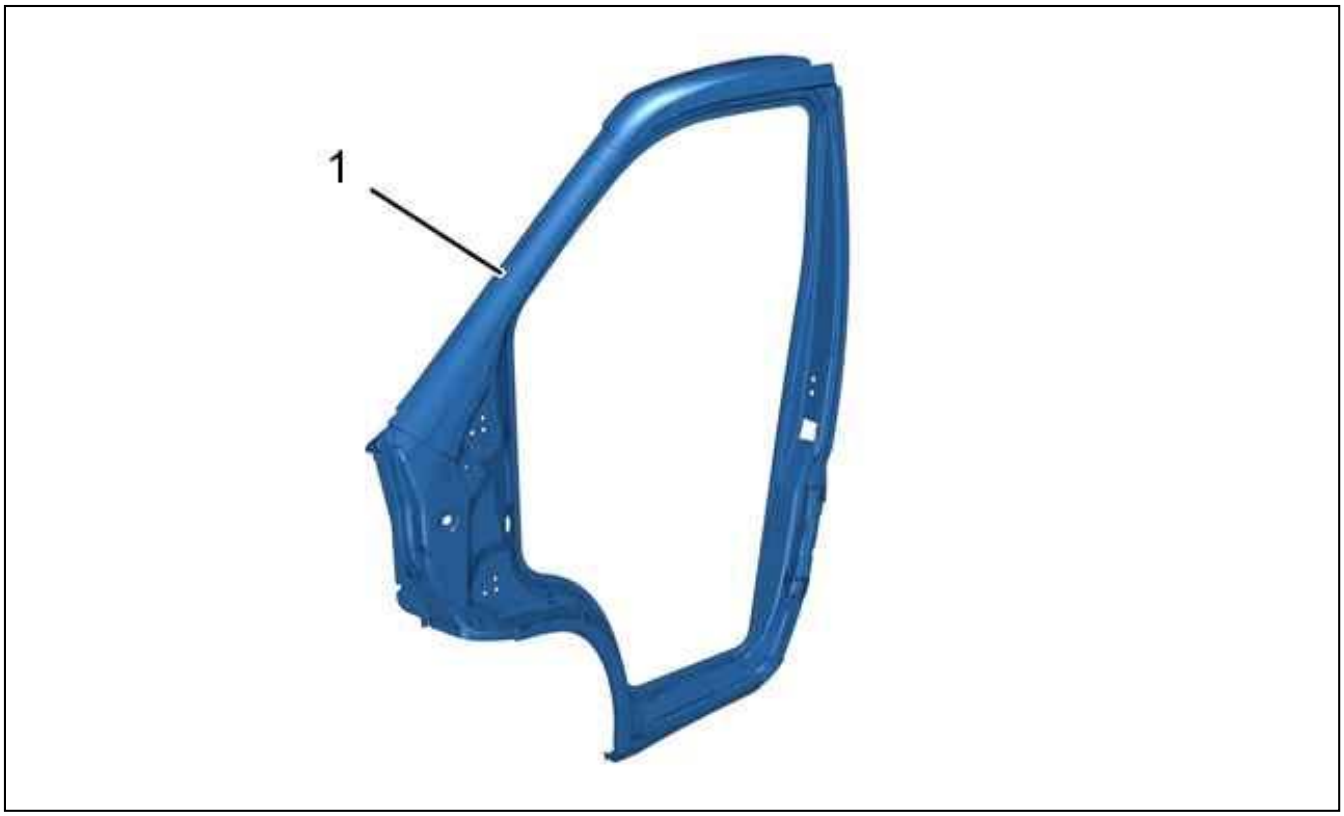

Figure : C4CH3SSD

Reference	Designation
(1)	Cab door frame

6. Preparation : Replacement part

CAUTION : When cleaning the mating edges, use scouring wheels only to avoid damaging the anticorrosior protection.

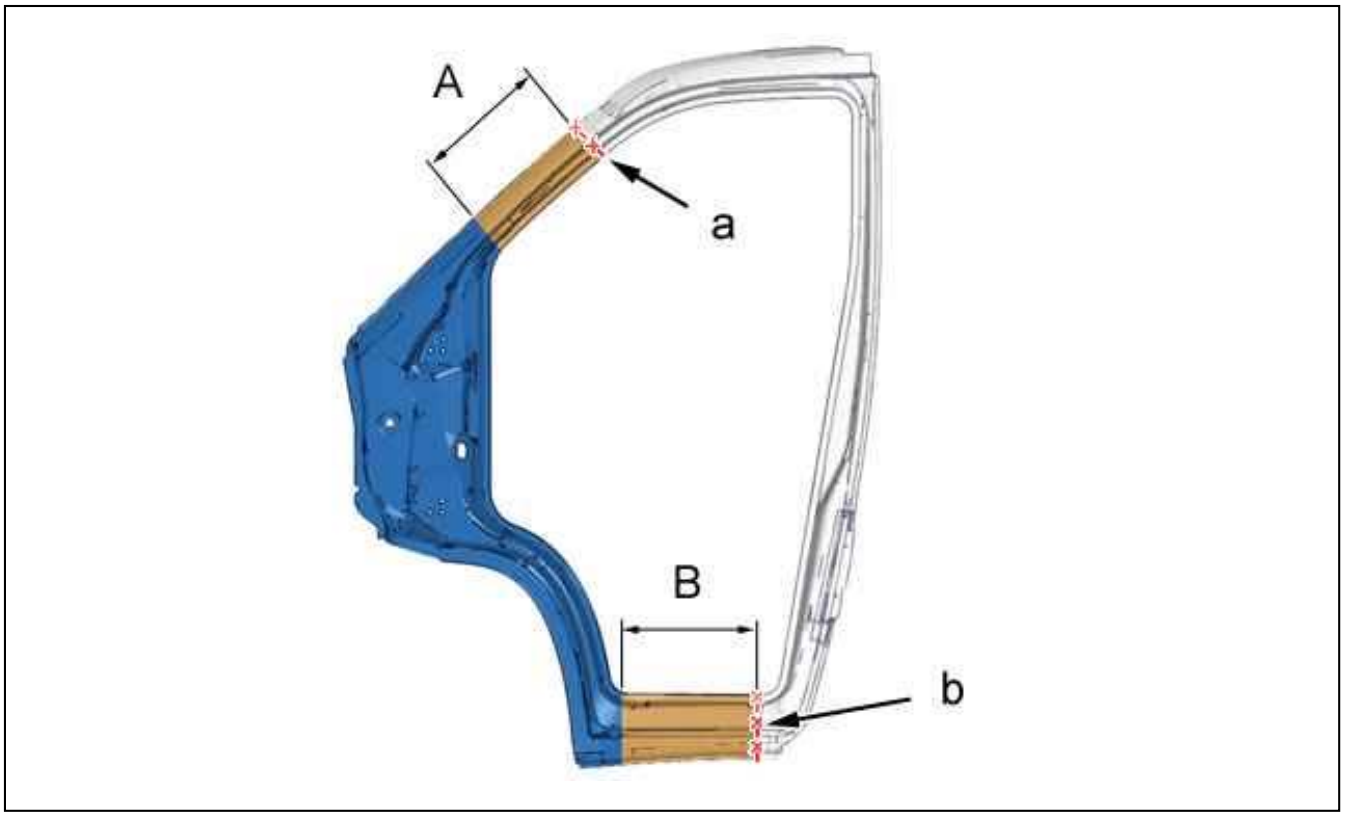

Figure : C4CH3STD

Draw a line (at "a", "b") in the cutting zones "A", "B" then cut out.

N.B. : The dimensions "A", "B" are given as an indication only ; The dimensions may change depending on the different situations for replacing the cab door frame.

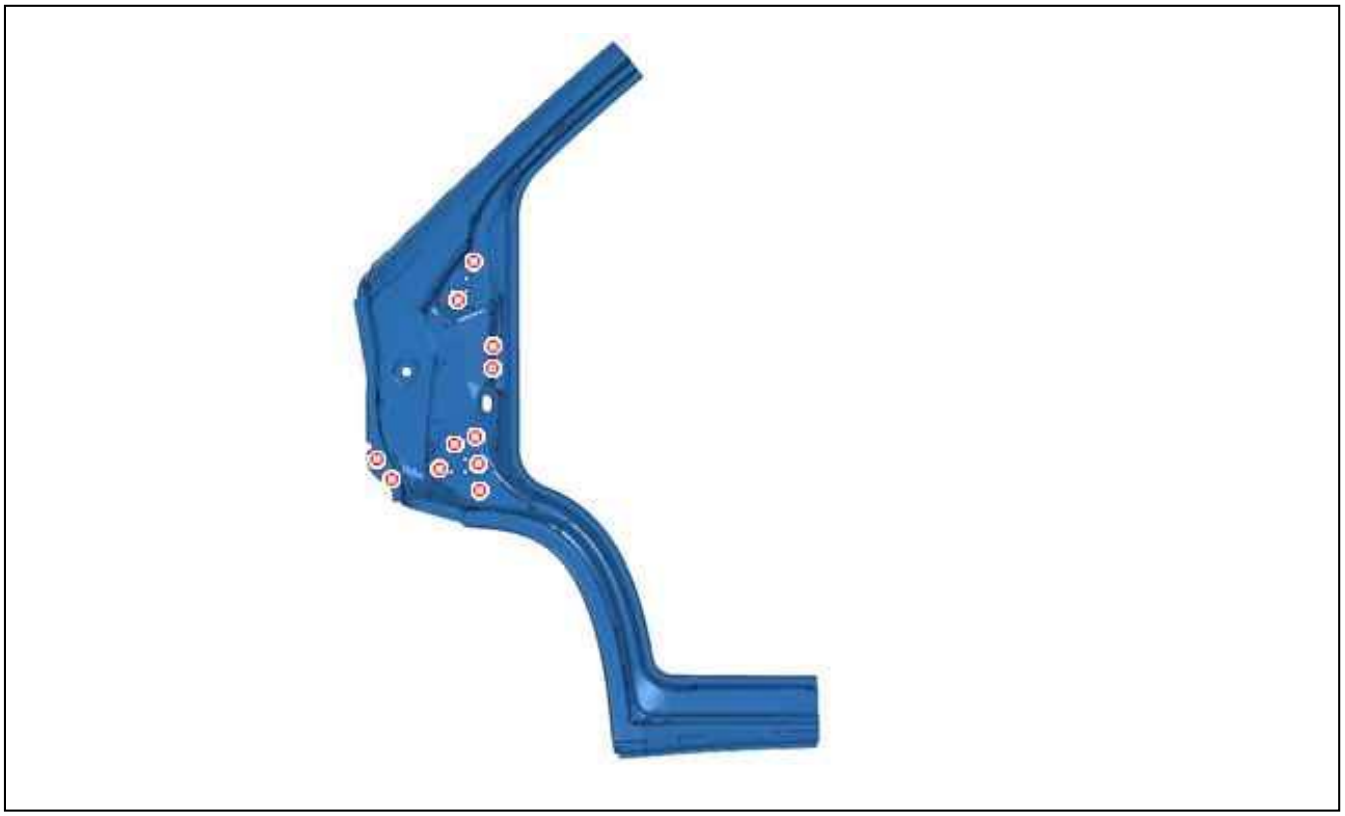

Figure : C4CH3SWD

Mark then drill to Ø 6,5 mm for later plug spot welding (11 holes).
Prepare the mating edges and protect them using a weldable primer (Index: "C7").

N.B. : Apply the weld-through primer on the internal faces of the panels to be welded.



Figure : C4CH3SXD

Mark then drill to Ø 6,5 mm for later plug welding (7 holes).
Prepare the mating edges and protect them using a weldable primer (Index: "C7").

N.B. : Apply the weld-through primer on the internal faces of the panels to be welded.



Figure : C4CH3SYD

Mark then drill to Ø 6,5 mm for later plug welding (1 hole).
Prepare the mating edges and protect them using a weldable primer (Index: "C7").

N.B. : Apply the weld-through primer on the internal faces of the panels to be welded.

7. Cutting of the part on the body

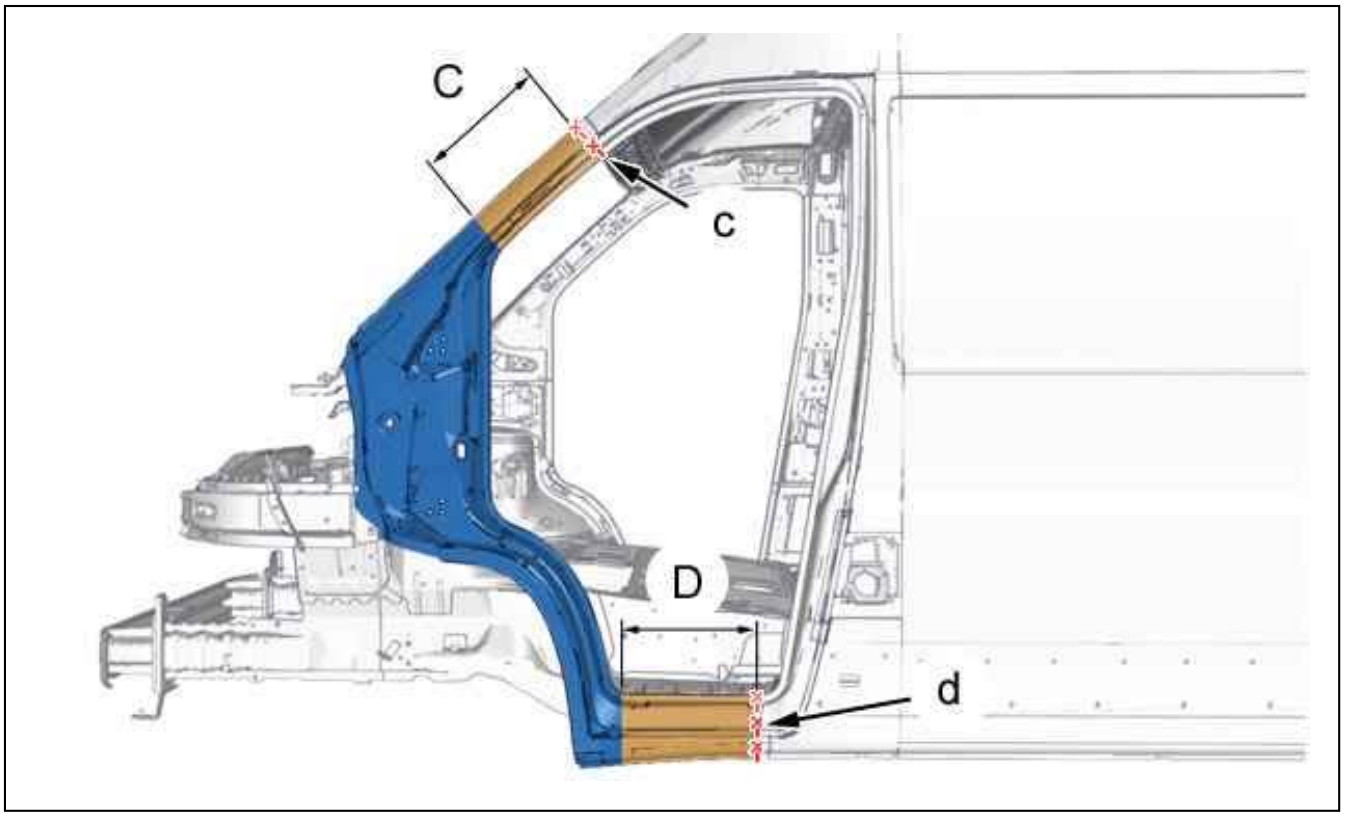

Figure : C4CH3SZD

Draw a line (at "c", "d") in the cutting zones "C", "D" then cut out.

N.B. : The dimensions "C", "D" are given as an indication only ; The dimensions may change depending on the different situations for replacing the cab door frame.



Figure : C4AP1R9D

Cut out the spot welds .

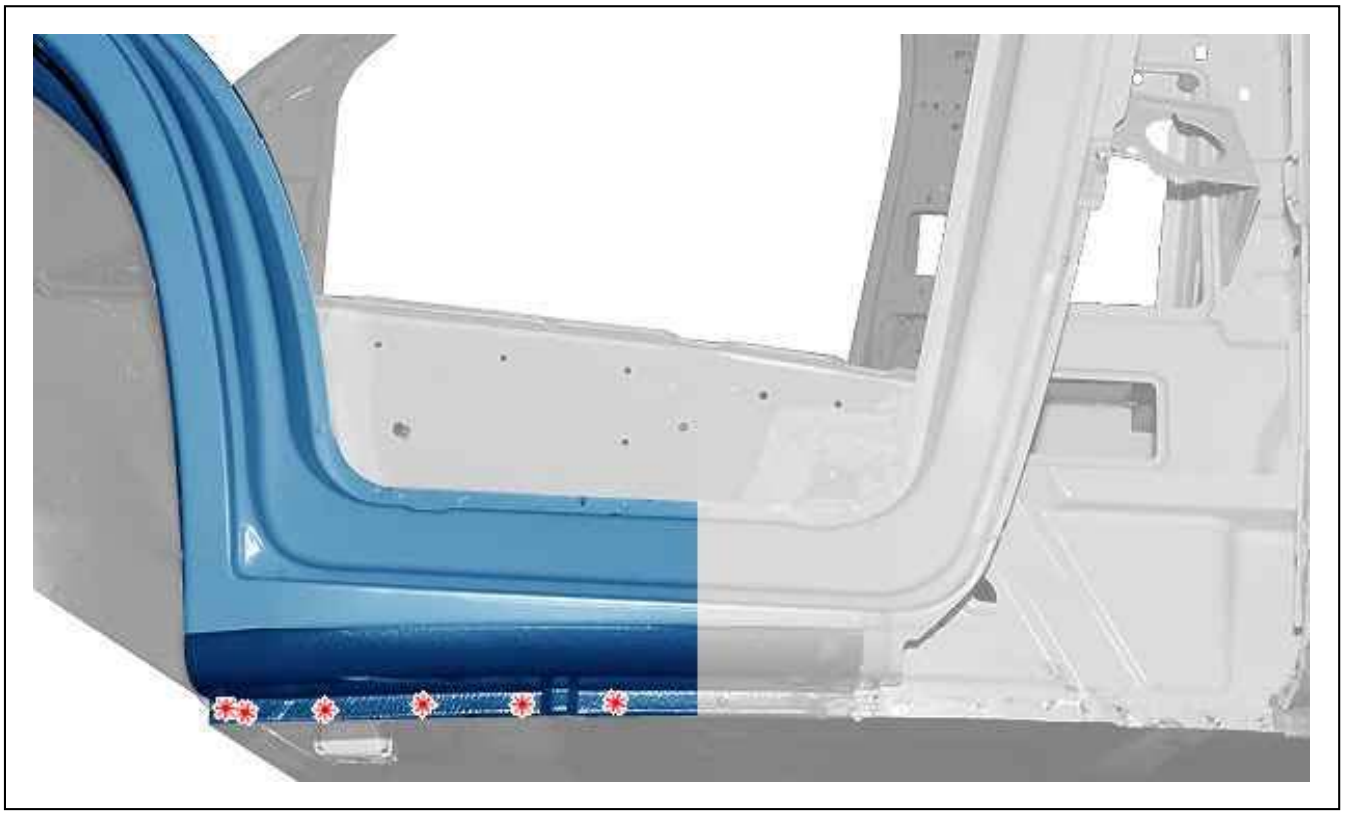

Figure : C4CH3T1D

Cut out the spot welds .

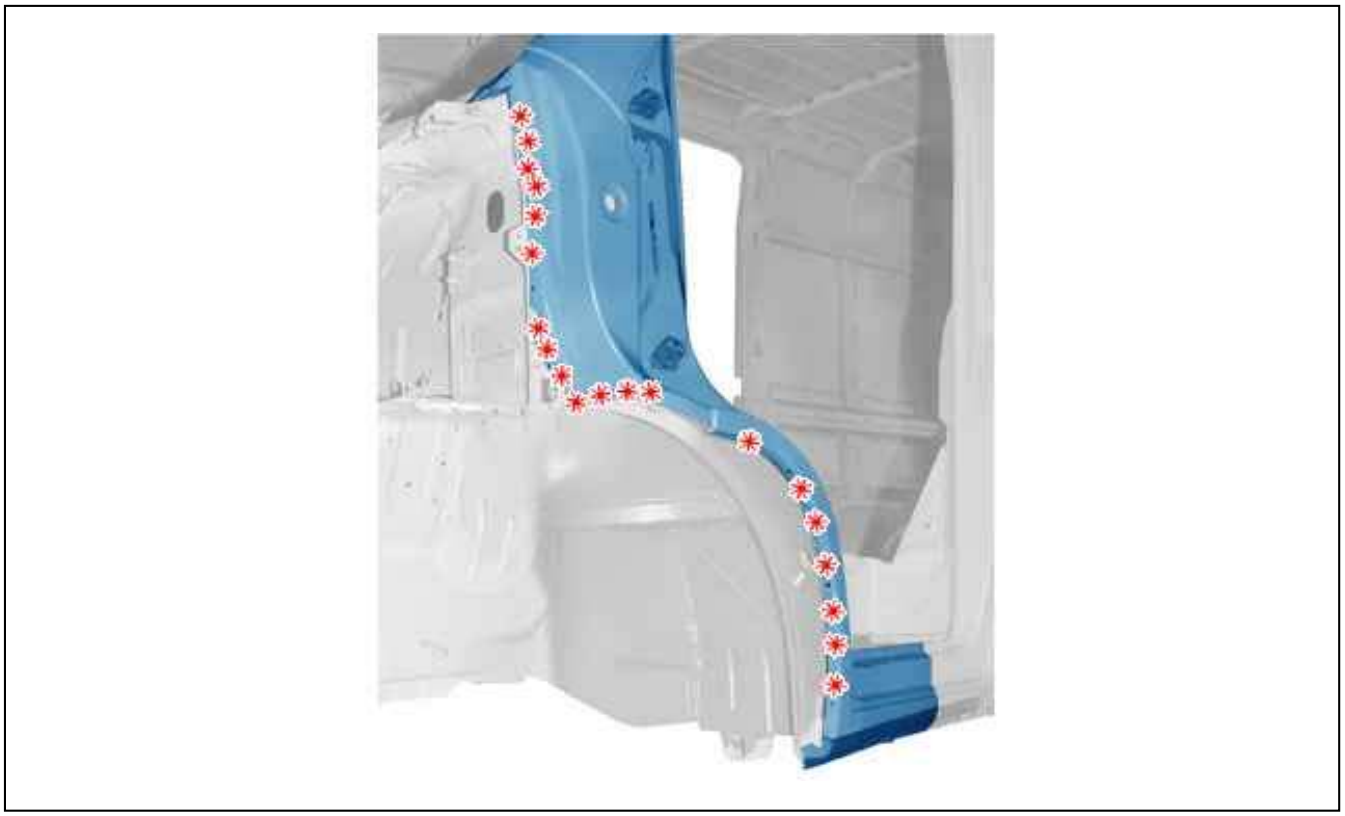

Figure : C4CH3T2D

Cut out the spot welds .

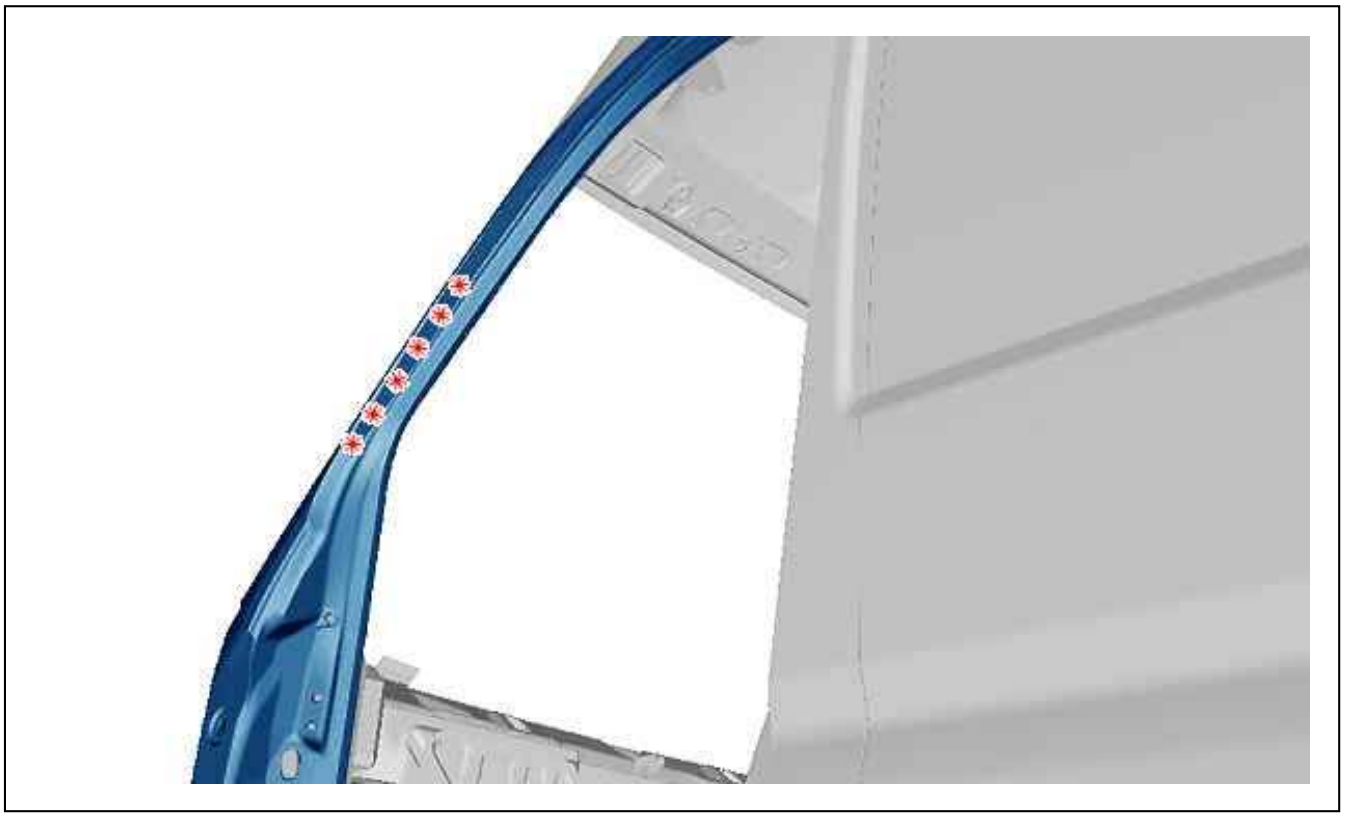

Figure : C4CP1XJD

Cut out the spot welds .

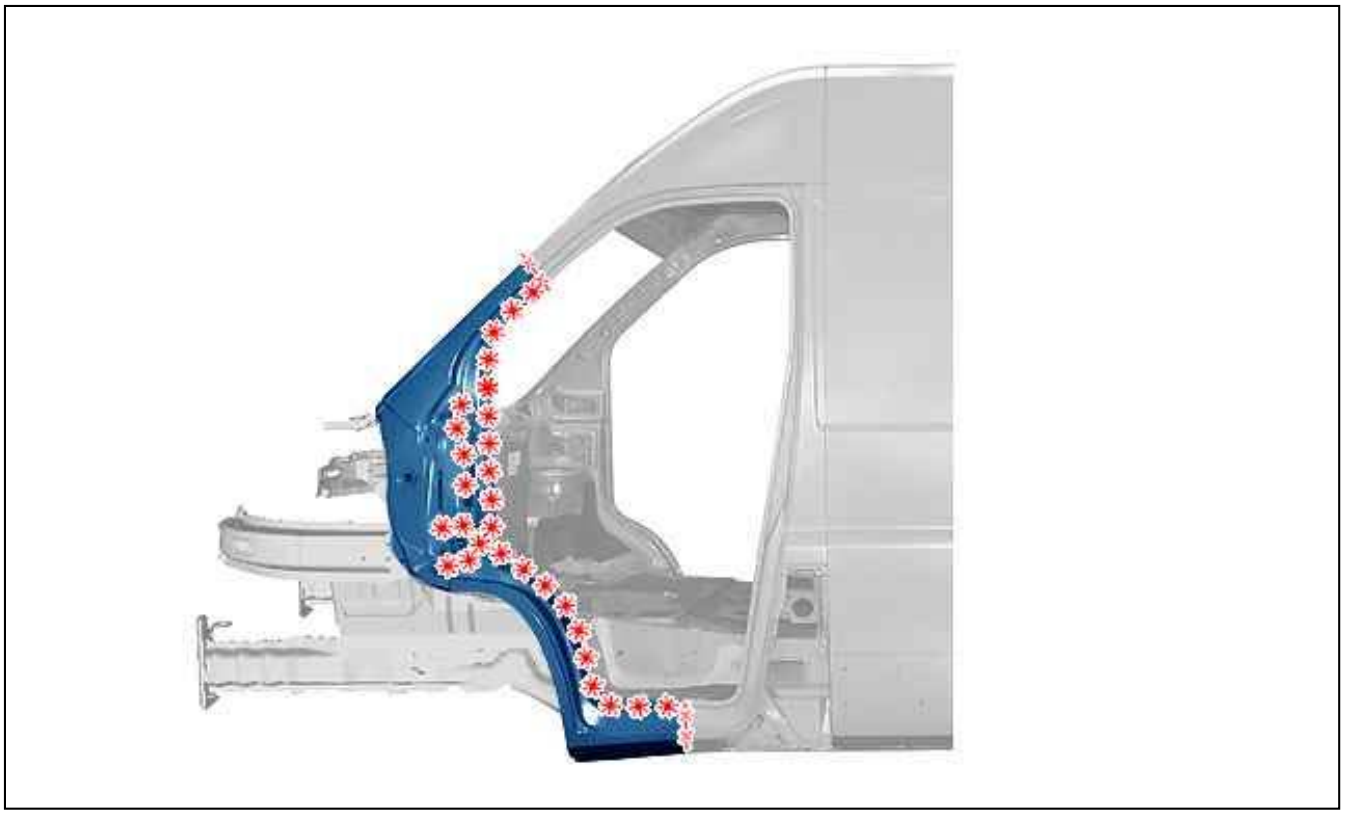

Figure : C4CH3T4D

Cut out the spot welds .
Remove the part cab door frame .

8. Cleaning and preparation of the body

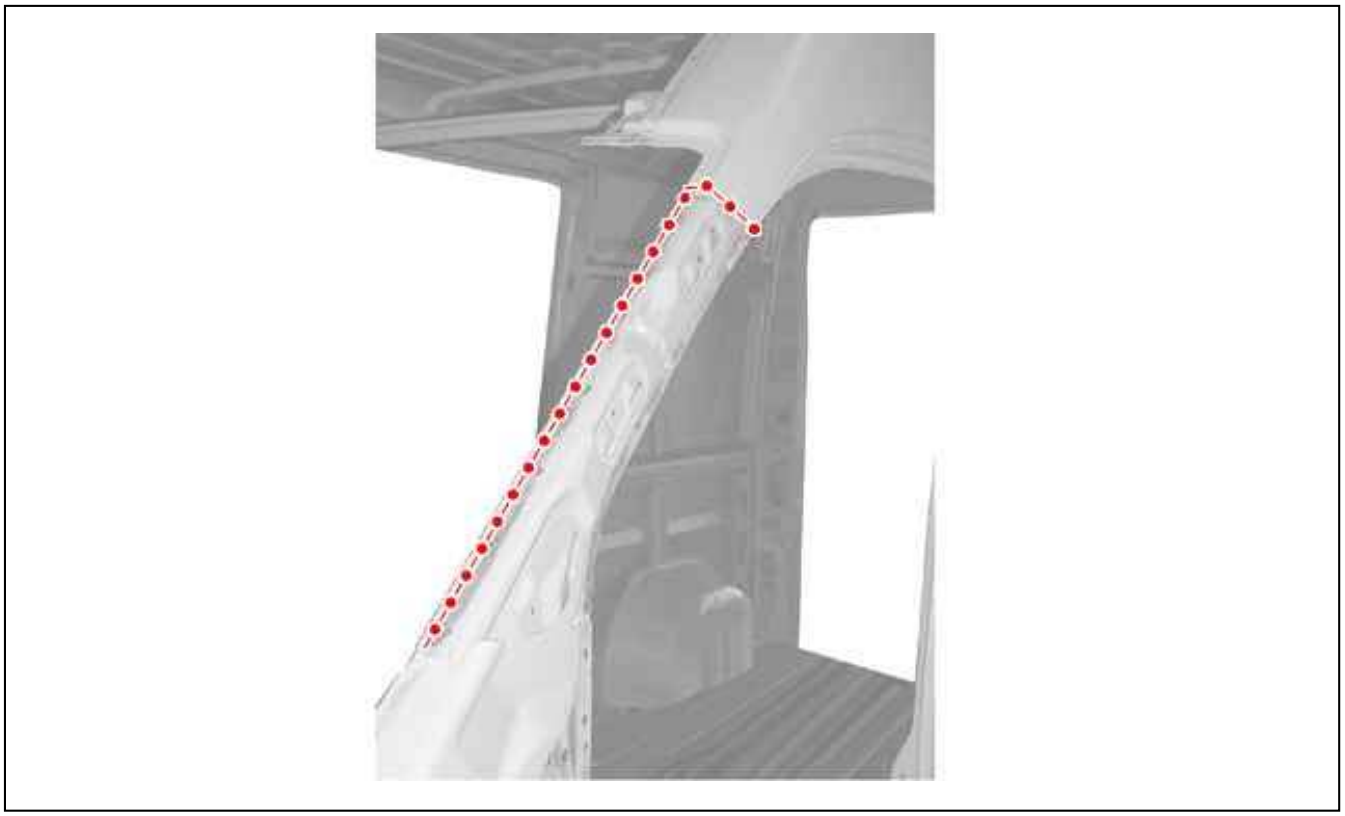

Figure : C4CP1XLD

Prepare the mating edges and protect them using a weldable primer (Index: "C7").

N.B. : Apply the weld-through primer on the internal faces of the panels to be welded.

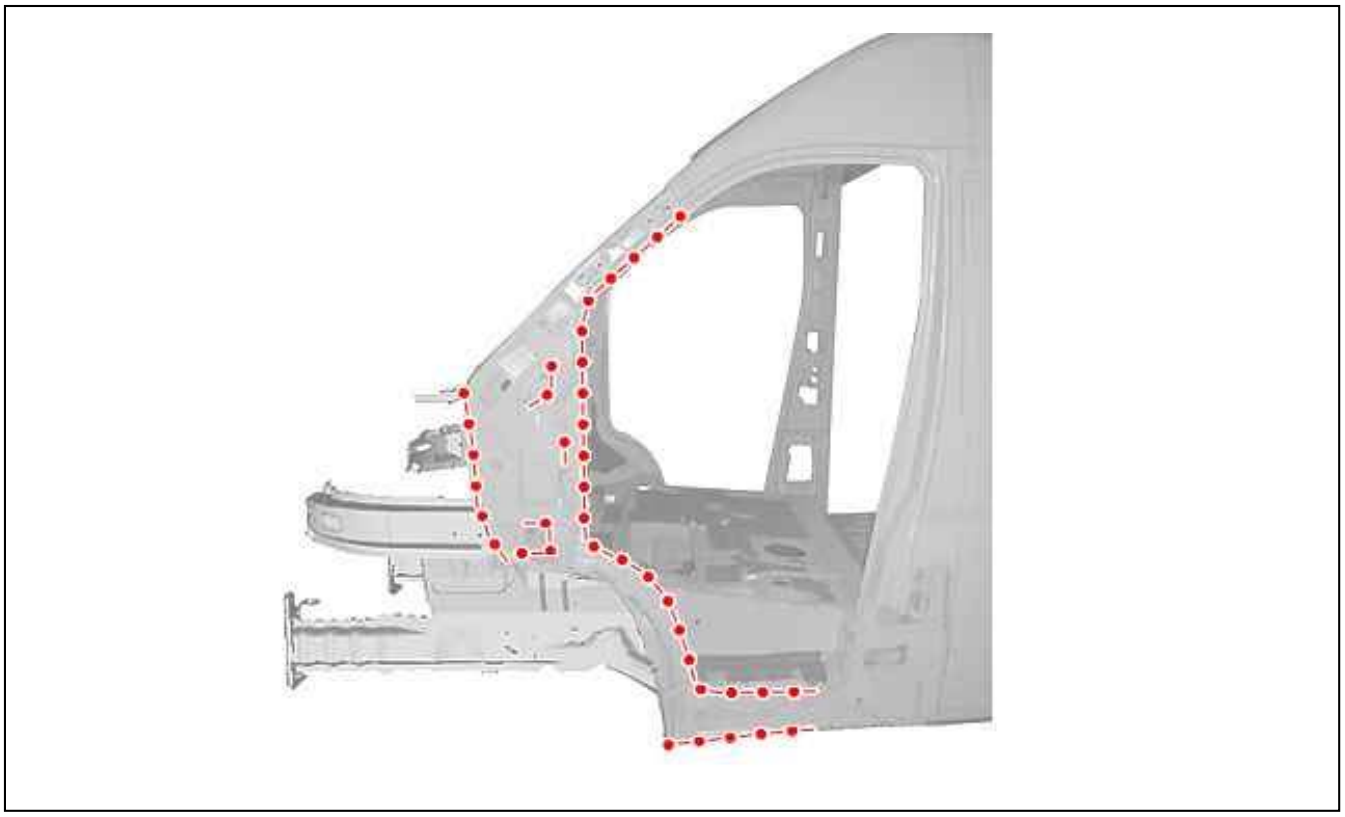

Figure : C4CH3T6D

Prepare the mating edges and protect them using a weldable primer (Index: "C7").

N.B. : Apply the weld-through primer on the internal faces of the panels to be welded.

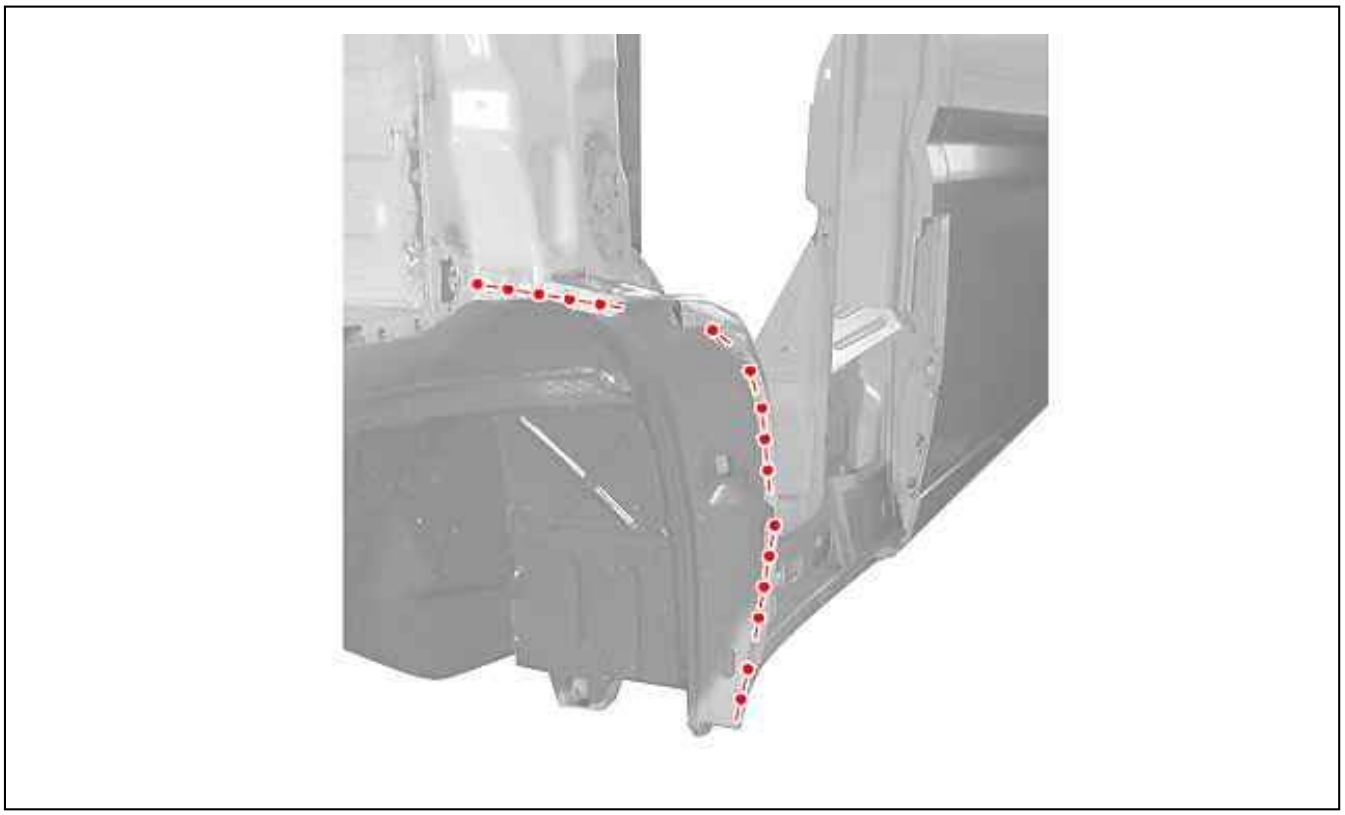

Figure : C4CP1XND

Prepare the mating edges and protect them using a weldable primer (Index: "C7").

N.B. : Apply the weld-through primer on the internal faces of the panels to be welded.

9. Adjustment

Position :

- Cab door frame
- The components for adjusting

Check the fits and clearances .
Adjust the cuts (if necessary).
Holds the part in position.

10. Welding

CAUTION : The number of spot welds necessary for the assembly of a new part must be identical to the number o spot welds fixing the original part.

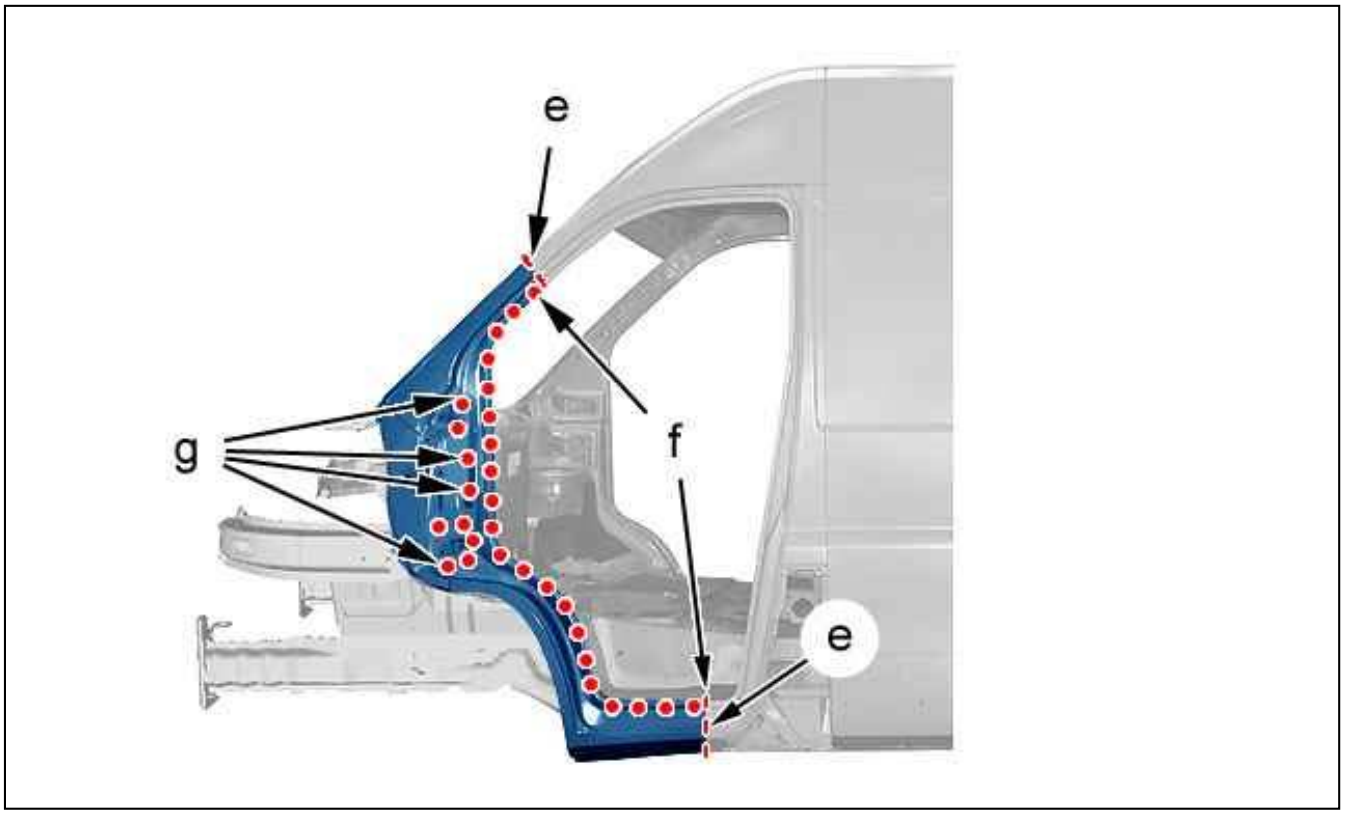

Figure : C4CH3T8D

Weld with MAG beads (at "e").
Grind the MAG weld beads.
Weld with MAG plug welds (at "g").
Grind the MAG plug welds.
Weld with electric spot welds (at "f").

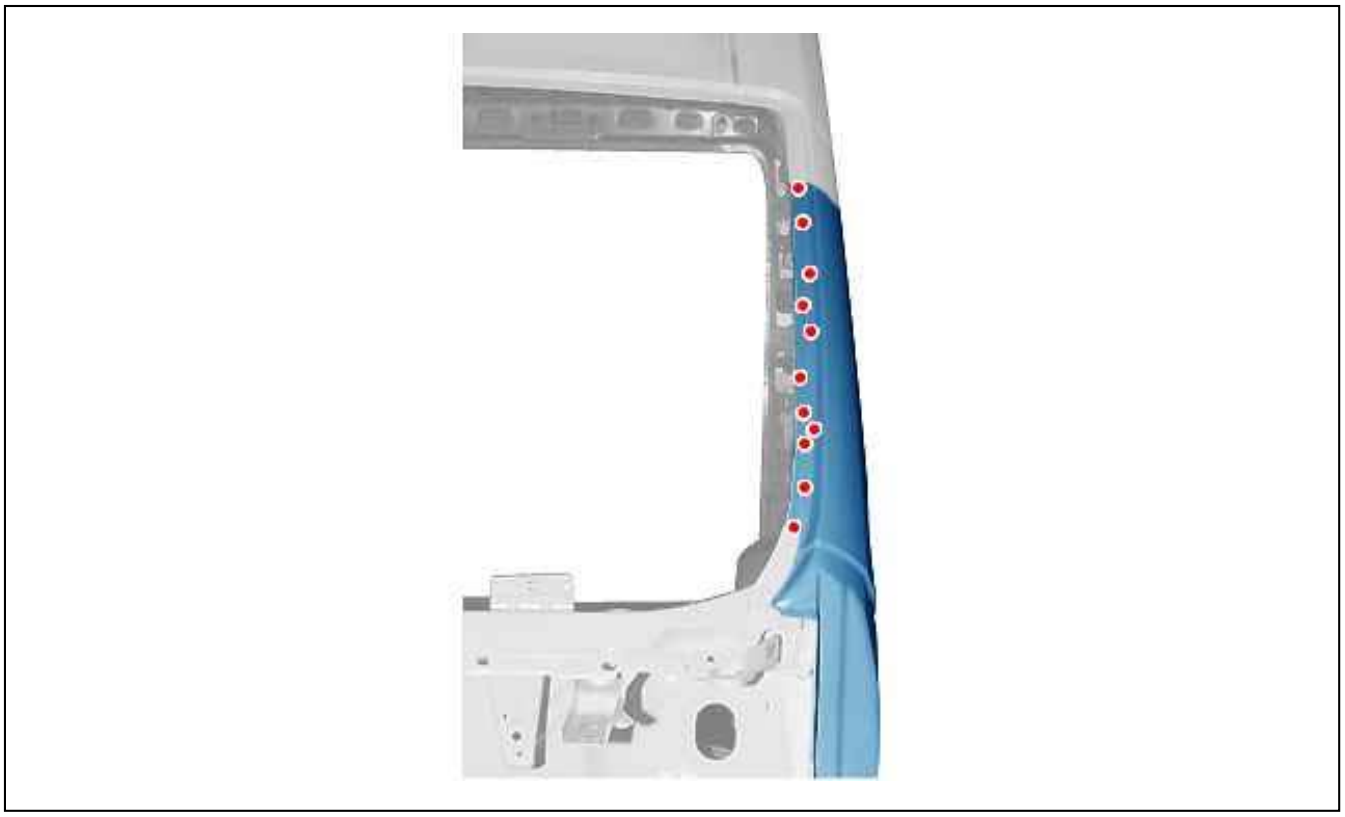

Figure : C4AP1RAD

Weld with electric spot welds.

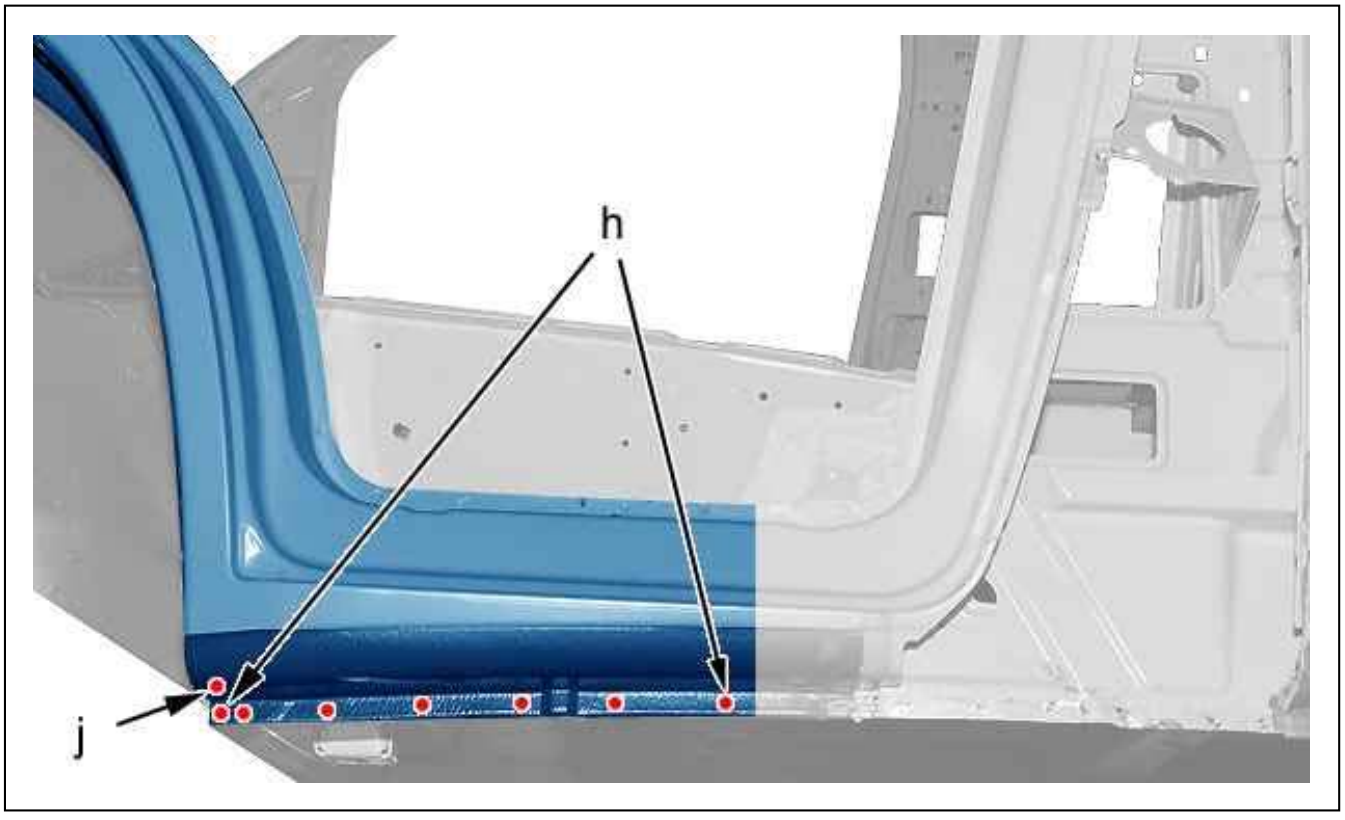

Figure : C4CH3TAD

Weld with electric spot welds (at "h").
MAG plug weld (at "j").

Grind the MAG plug weld.

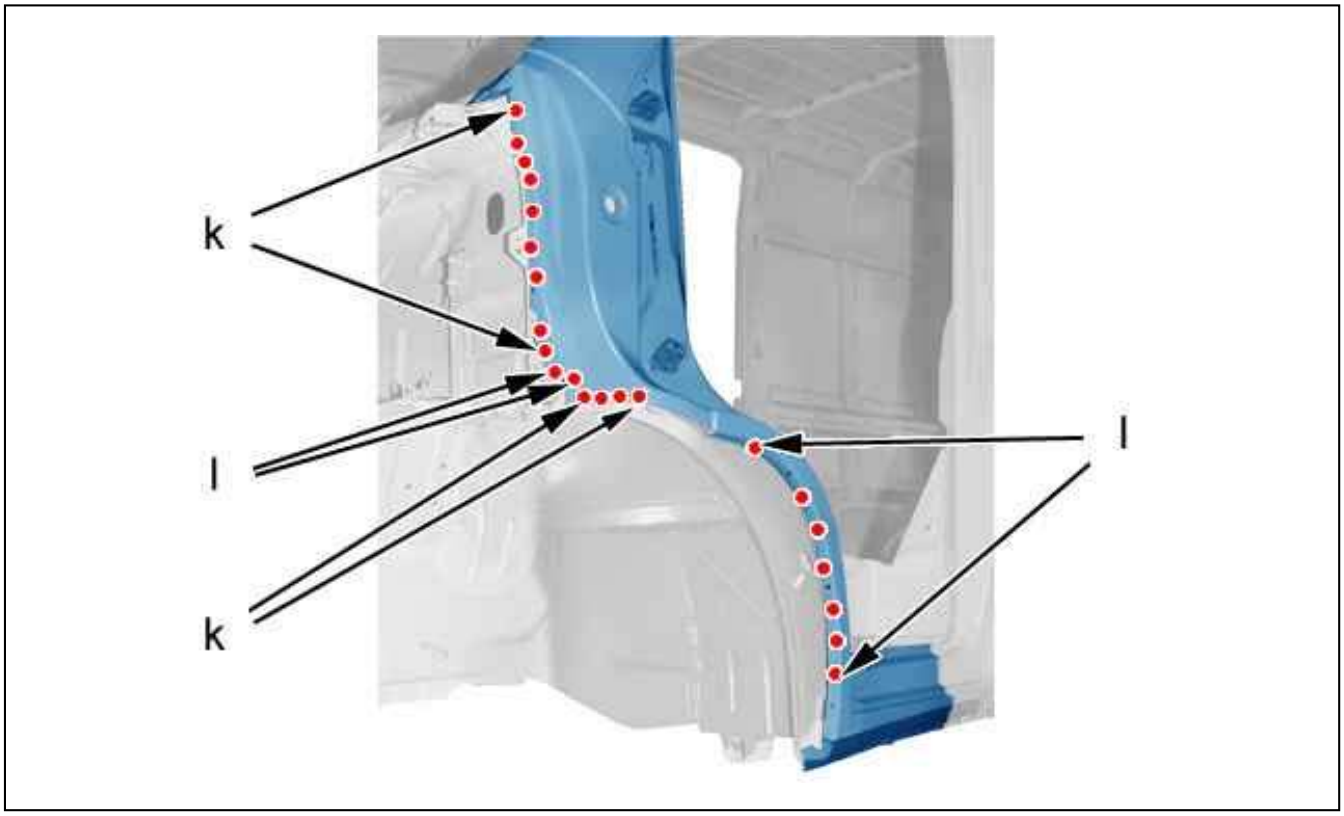

Figure : C4CH3TDD

Weld with electric spot welds (at "k").
Weld with MAG plug welds (at "l").
Grind the MAG plug welds.

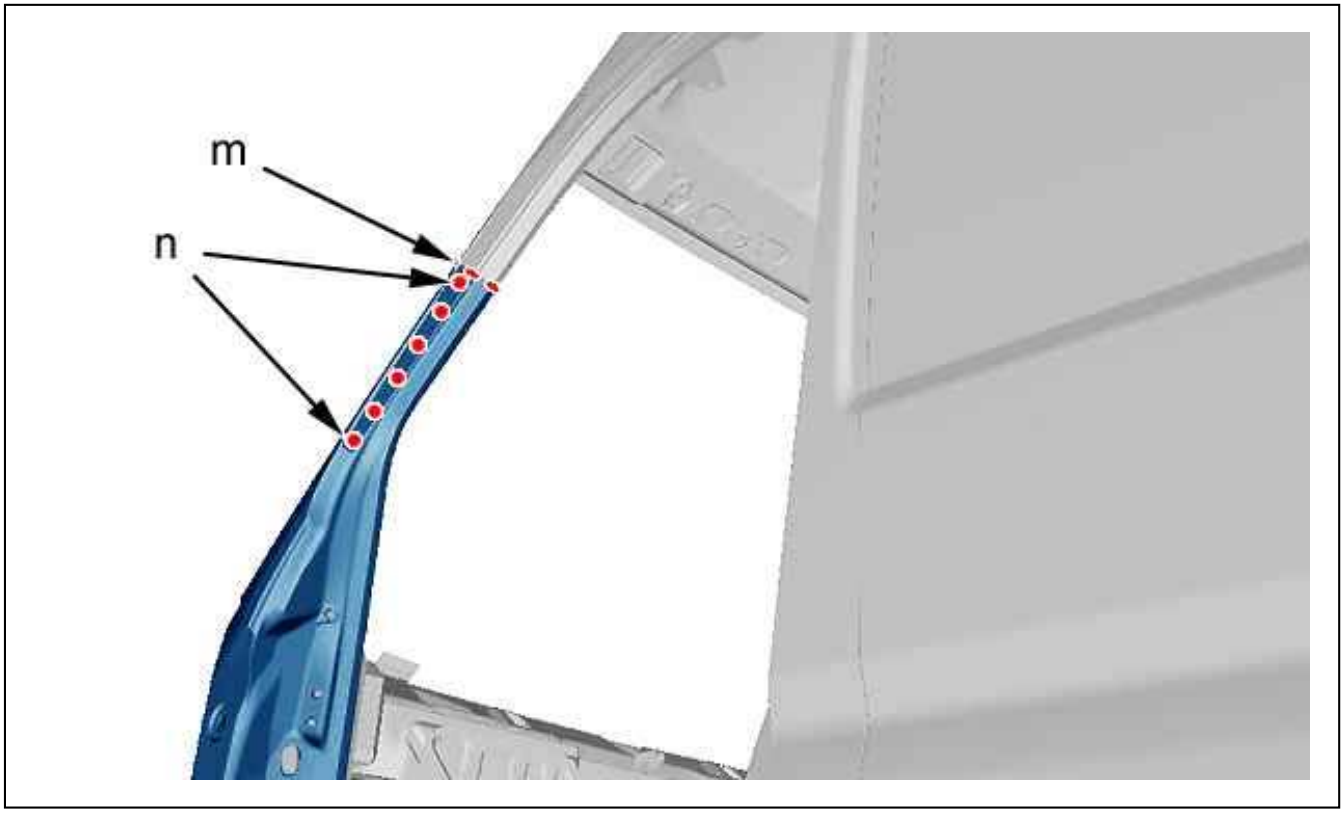

Figure : C4CH3TGD

Figure 20.
Weld by MAG bead (at "m").
Grind the bead of MAG weld.
Weld with MAG plug welds (at "n").
Grind the MAG plug welds.

11. Sealing protection

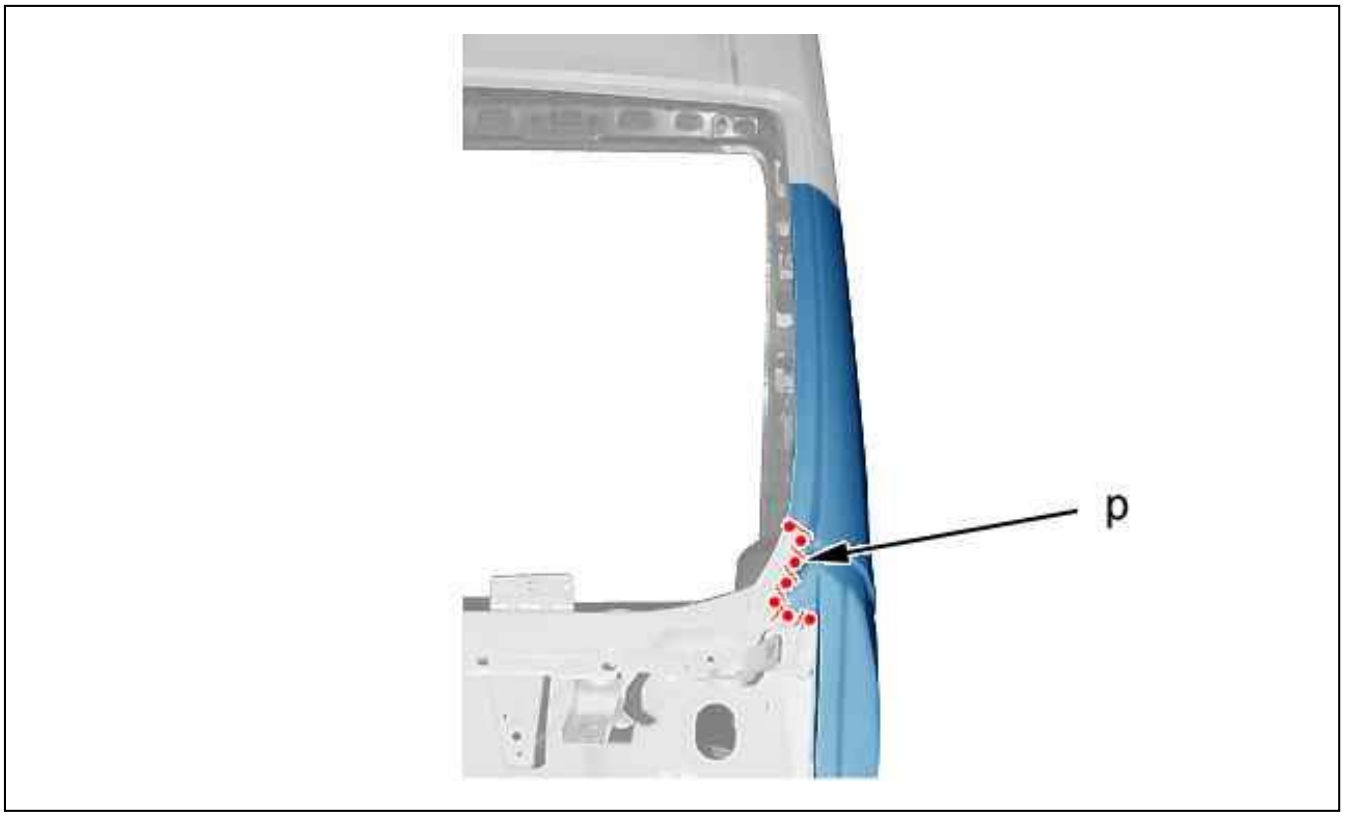

Figure : C4CH3THD

Apply a phosphate-print layer to the zones laid bare.
Apply a sealing mastic (Index: "A1") (at "p").



Figure : C4CP1XTD

Figure 22.
Apply a phosphate-print layer to the zones laid bare.
Apply a sealing mastic (Index: "A1").

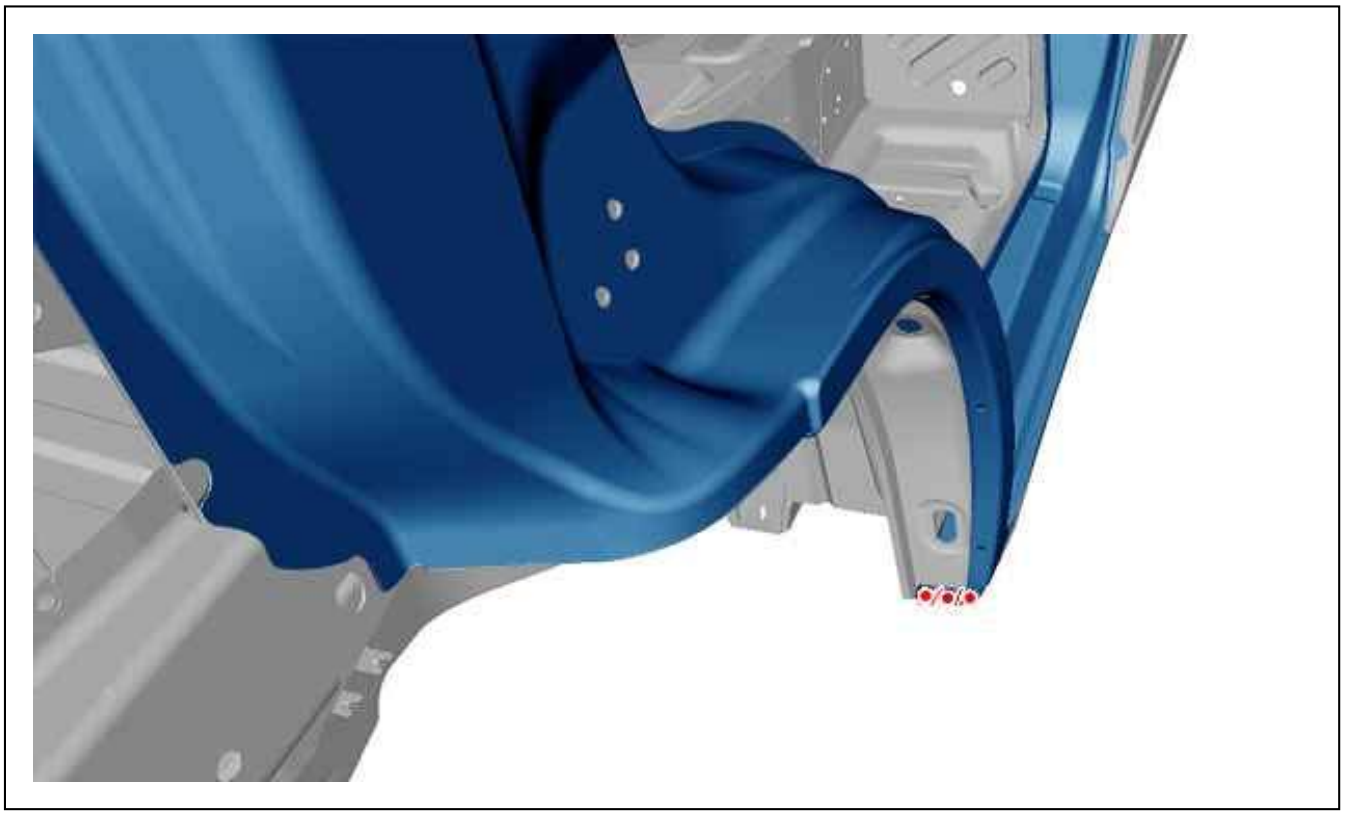

Figure : C4CP1XUD

Apply a phosphate-print layer to the zones laid bare.
Apply a sealing mastic (Index: "A1").
Apply underseal protection (Index: "C4").
Paint then spray into the hollow sections, product index C5, in the repair zone.

12. Additional operations

Refit the electrical harnesses and the components removed.

13. Reinitialisation

Reactivate the pyrotechnic systems .

CAUTION : Perform the operations to be carried out following reconnection of the battery.

Reconnect the battery.

REPLACEMENT : UPPER PART OF THE FRONT LEFT EXTERIOR PILLAR

ESSENTIAL : All of the stripped surfaces must be protected by means of the approved electrolytic rezincing process (see the relevant operation).

ESSENTIAL : Observe the elementary rules of hygiene and safety (wear a face mask to protect against fumes and vapour - work in a well ventilated space).

1. Additional operations

Disconnect the battery.
Replace the front side panel (see the relevant operation).
Release the wiring harnesses.

2. Identification of the replacement parts



Figure : C4CP1XVD

Figure 1.
Upper part of the front left exterior pillar .

3. Preparation of the new part



Figure : C4CP1XWD

Figure 2.
Mark then drill to Ø 6 mm for later plug welding (19 holes).
Prepare the mating edges .

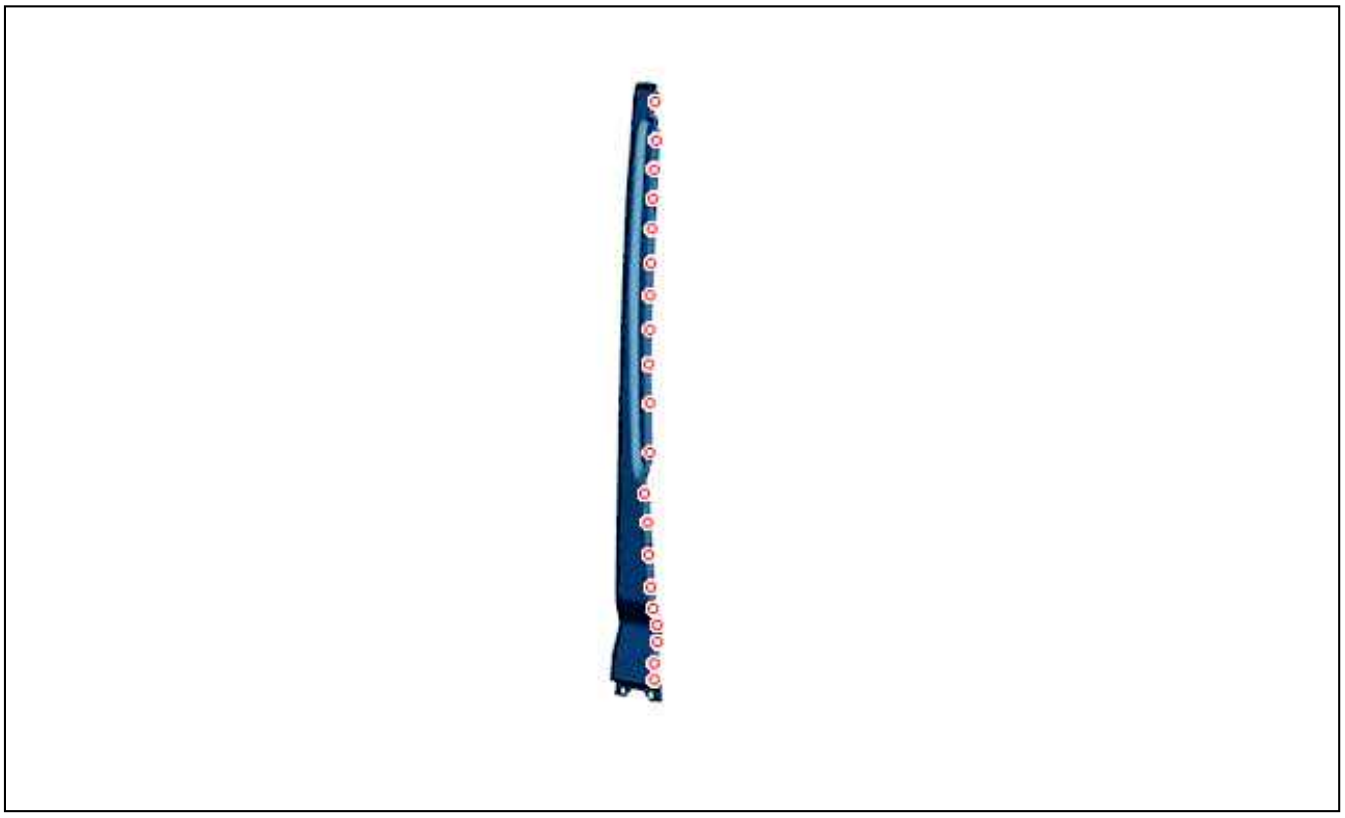

Figure : C4CP1XXD

Figure 3.
Mark then drill to Ø 6 mm for later plug welding (20 holes).
Prepare the mating edges .

4. Cutting out

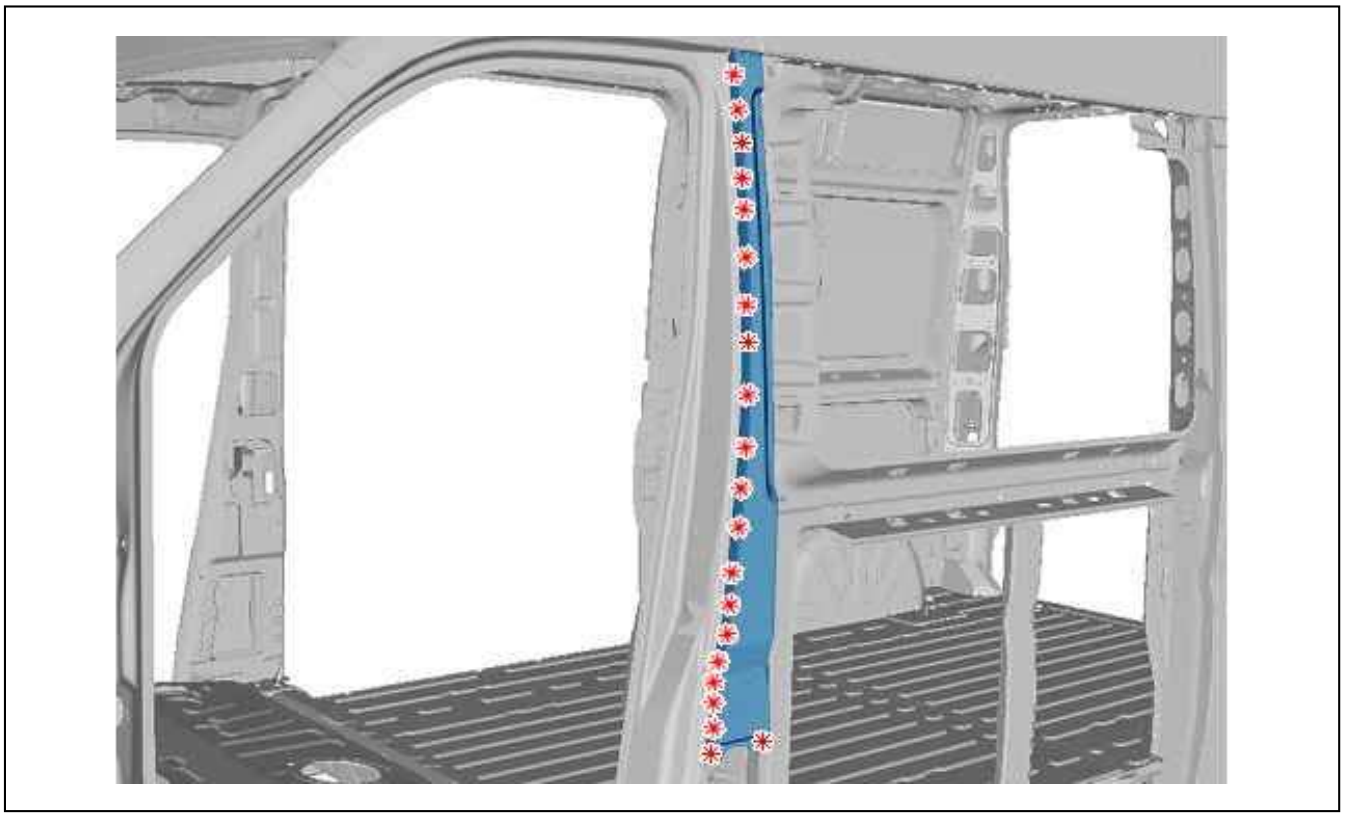

Figure : C4CP1XYD

Figure 4.
Cut out the spot welds .

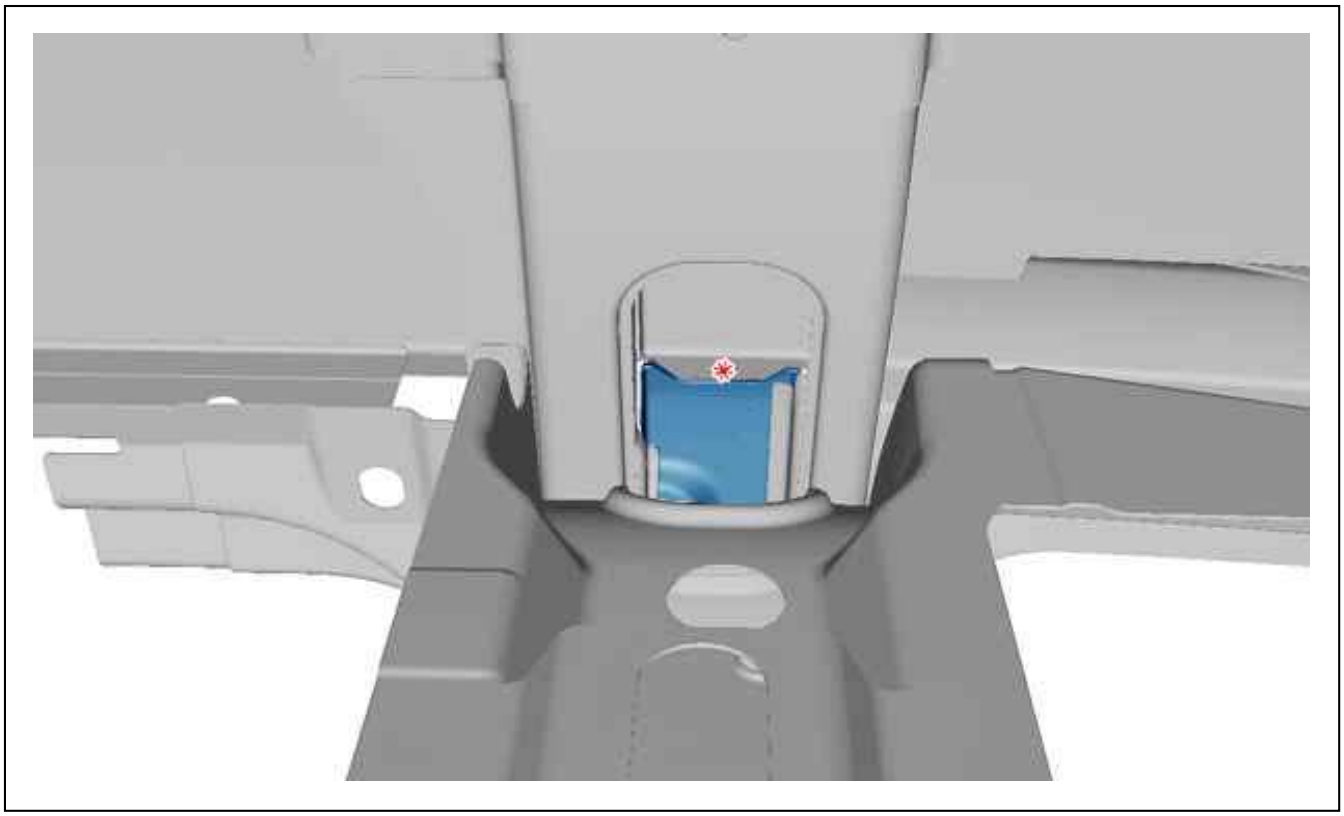

Figure : C4CP1XZD

Figure 5.
Cut out the spot weld .

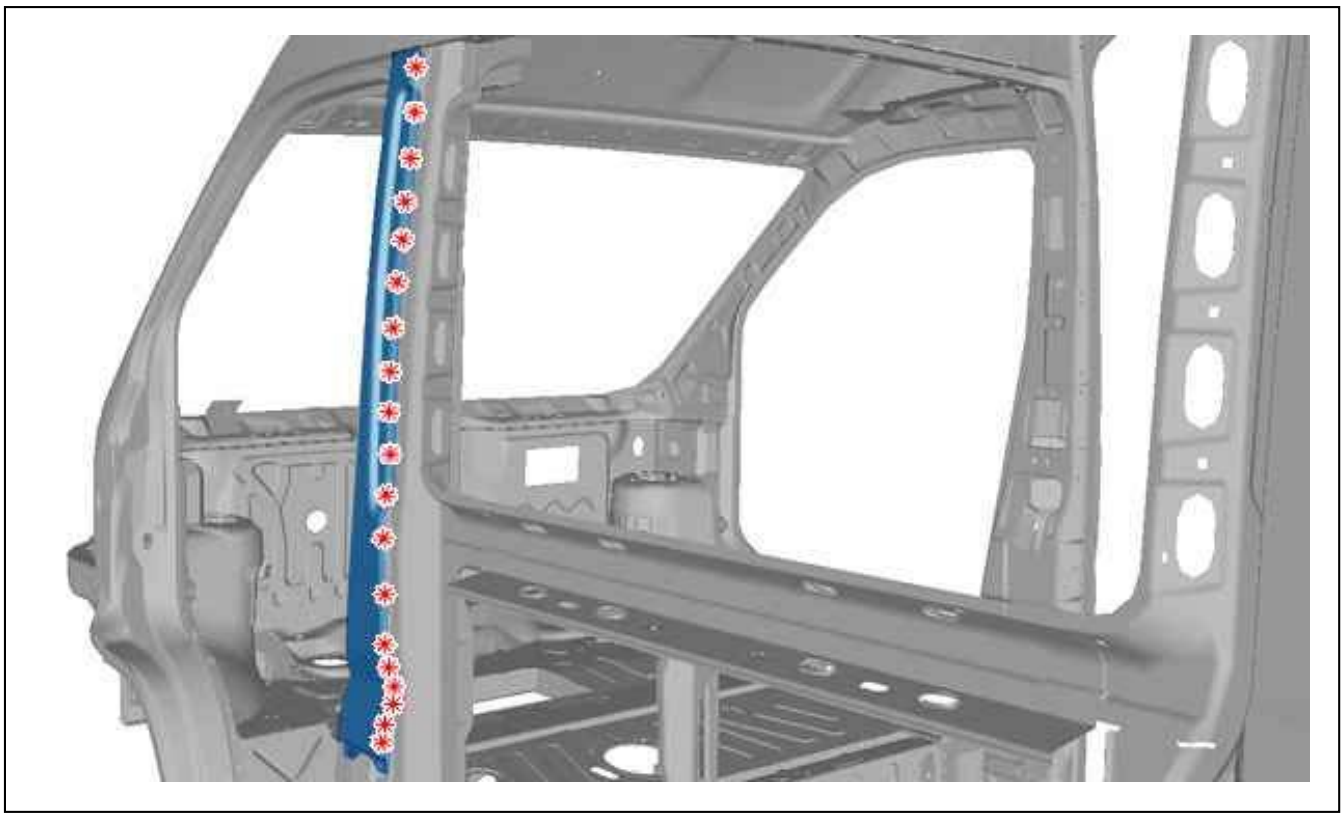

Figure : C4CP1Y0D

Figure 6.

Cut out the spot welds .
Remove the upper part of the front left exterior pillar .

5. Bodywork cleaning and preparation

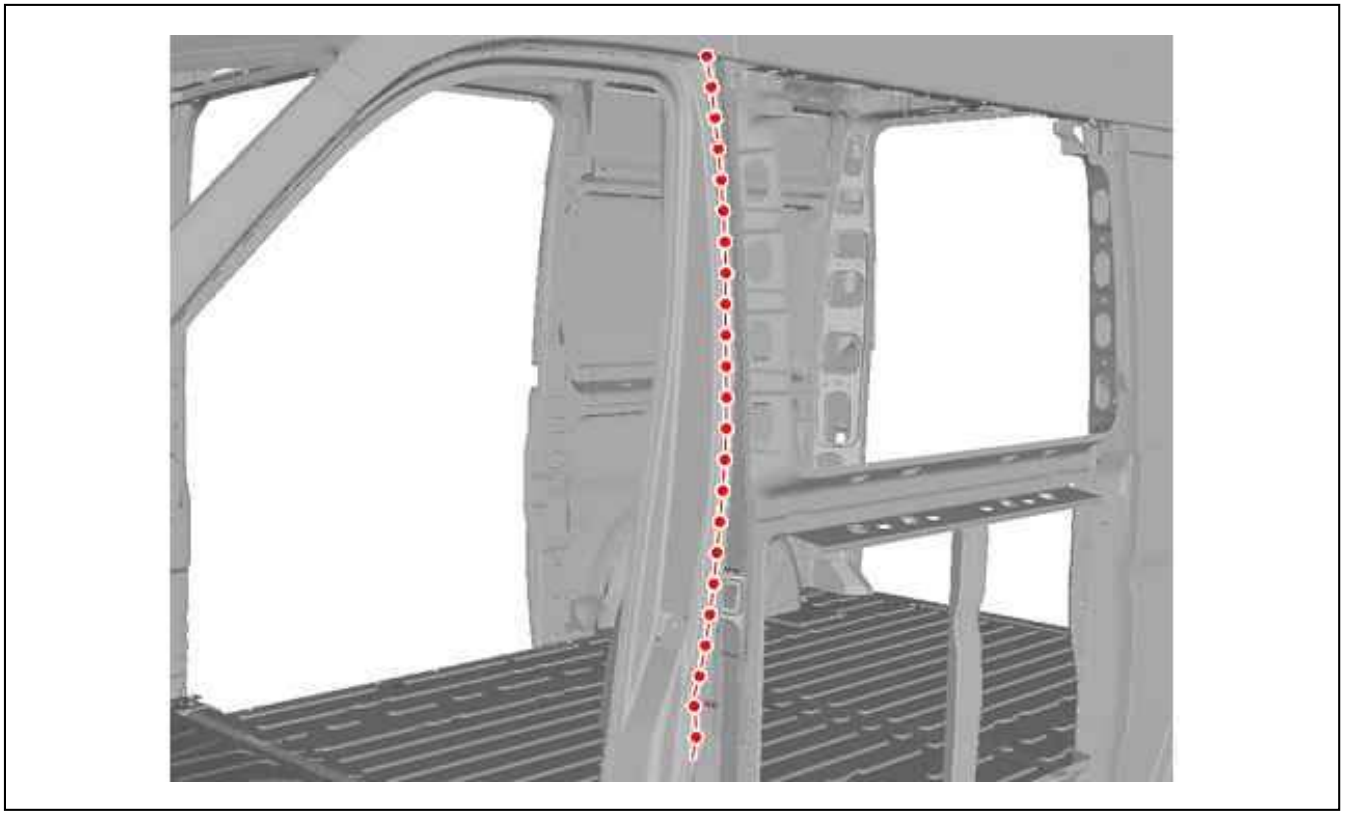

Figure : C4CP1Y1D

Figure 7.
Align then prepare the mating edges.

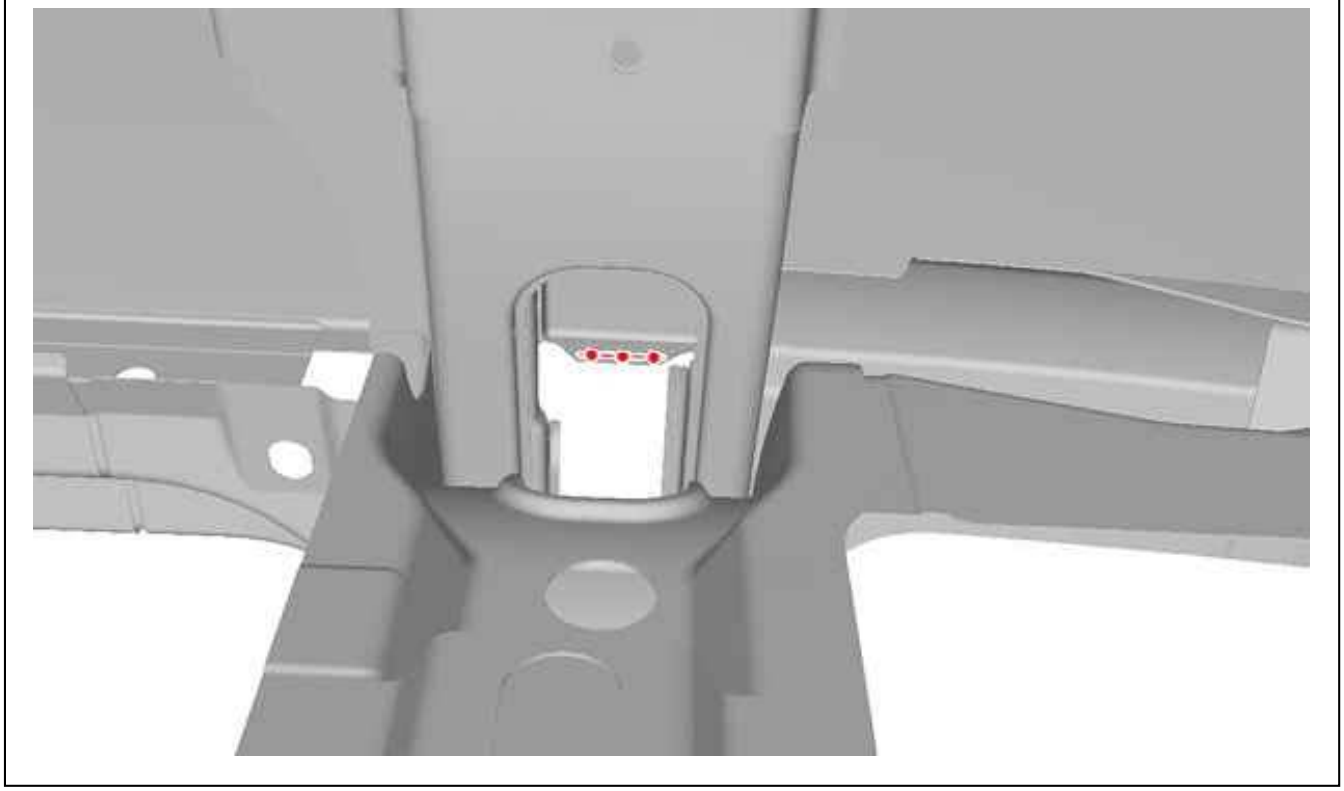

Figure : C4CP1Y2D

Figure 8.
Align then prepare the mating edges.

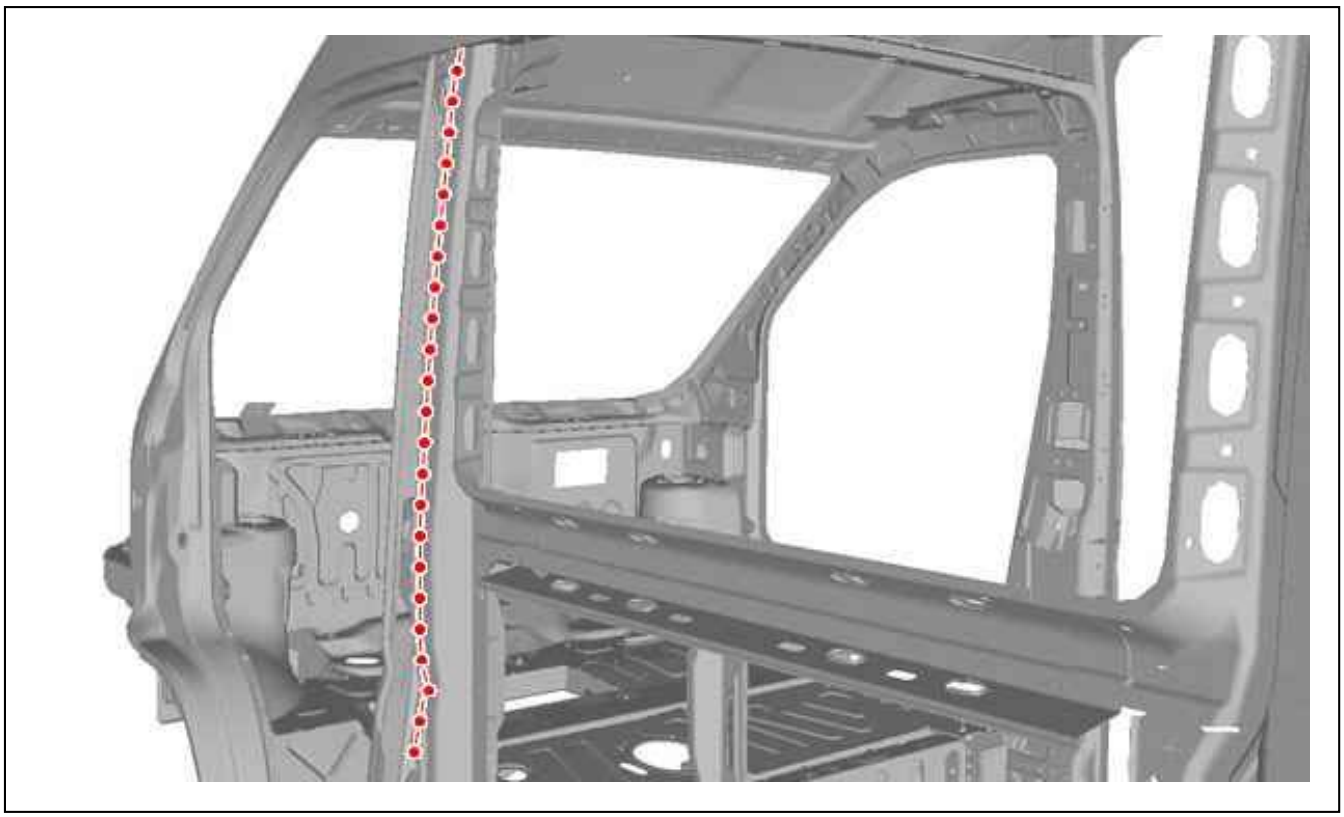

Figure : C4CP1Y3D

Figure 9.

Prepare the mating edges .
Align the mating edges and protect them with a weldable primer.

6. Adjustment

Present the component for adjustment.
Check the fits and clearances (see the relevant operation).

7. Welding

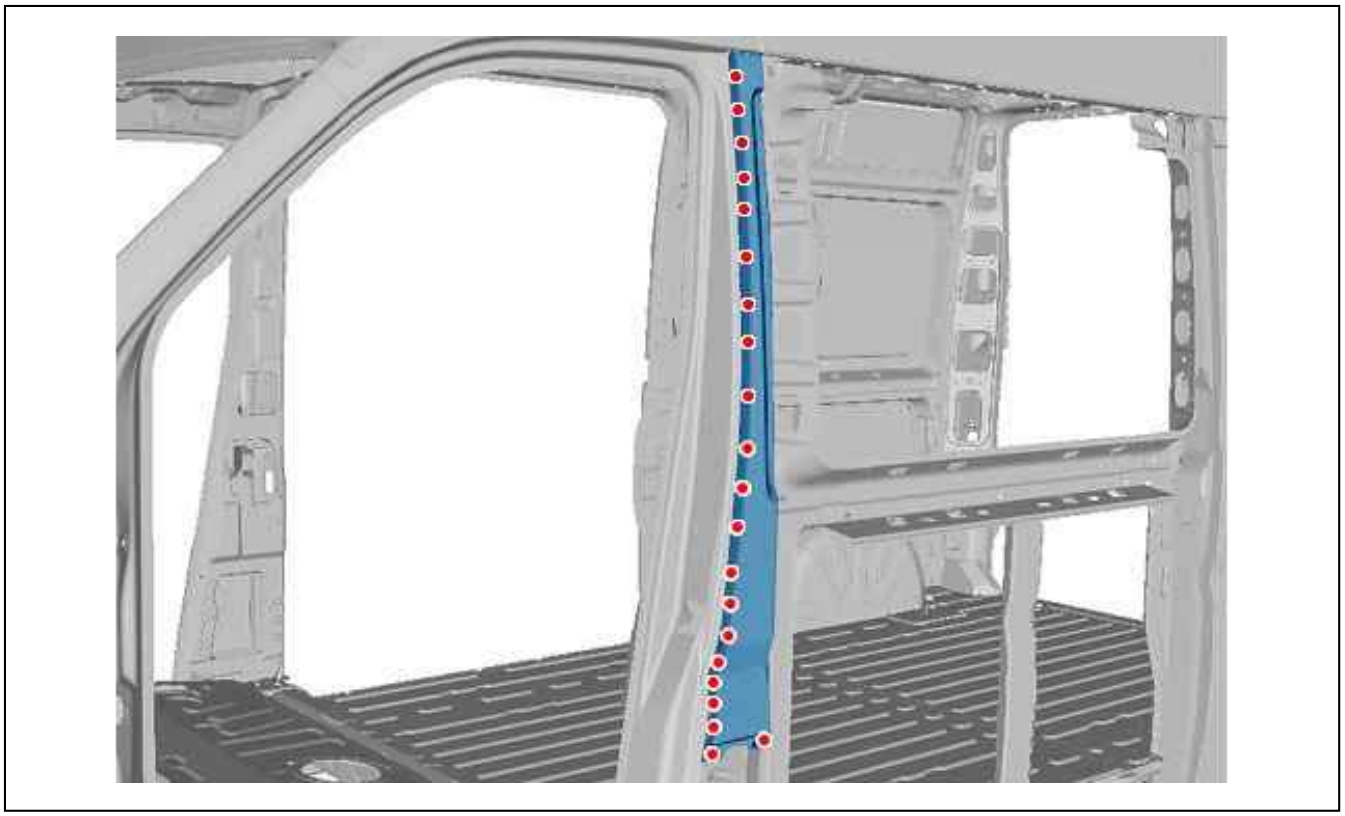

Figure : C4CP1Y4D

Figure 10.
Weld with plug welds.
Grind the plug welds.

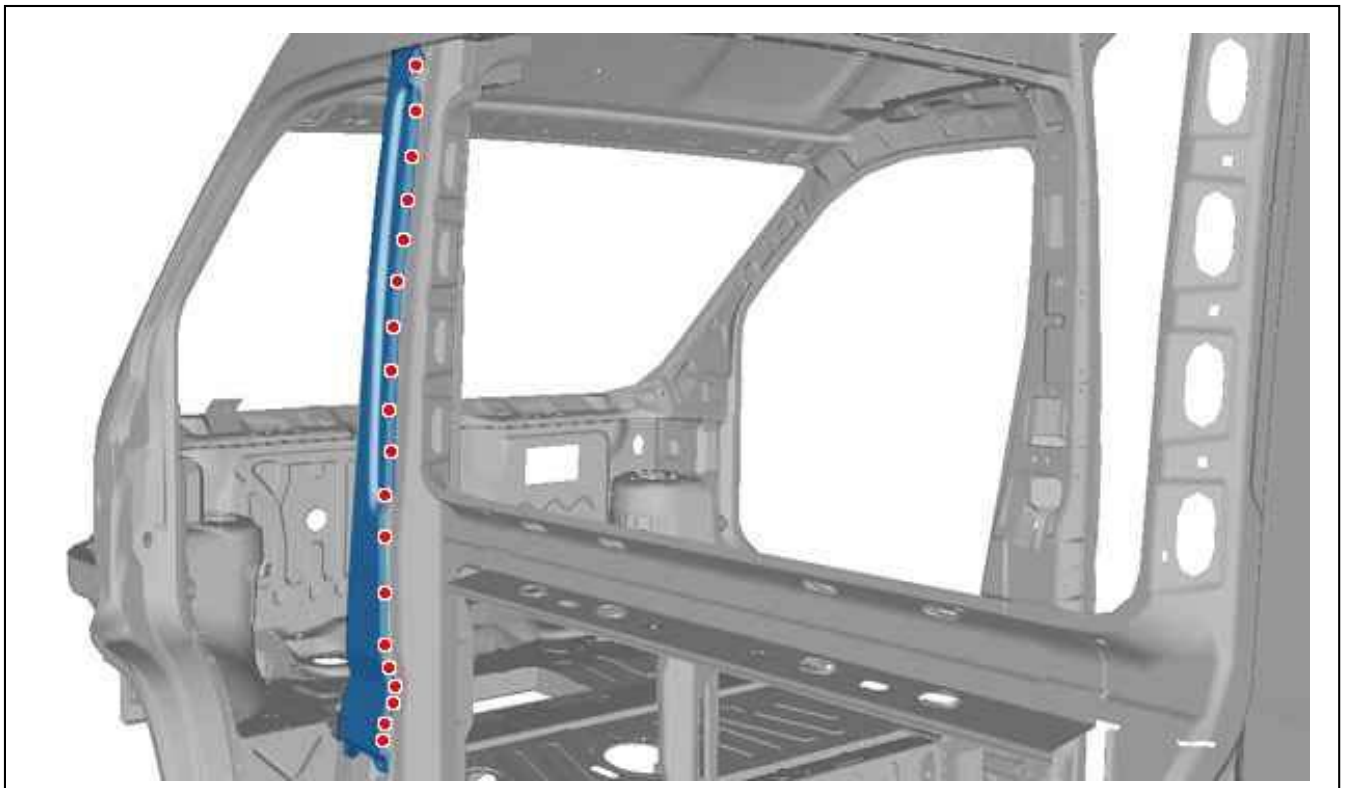

Figure : C4CP1Y5D

Figure 11.
Weld with plug welds.
Grind the plug welds.

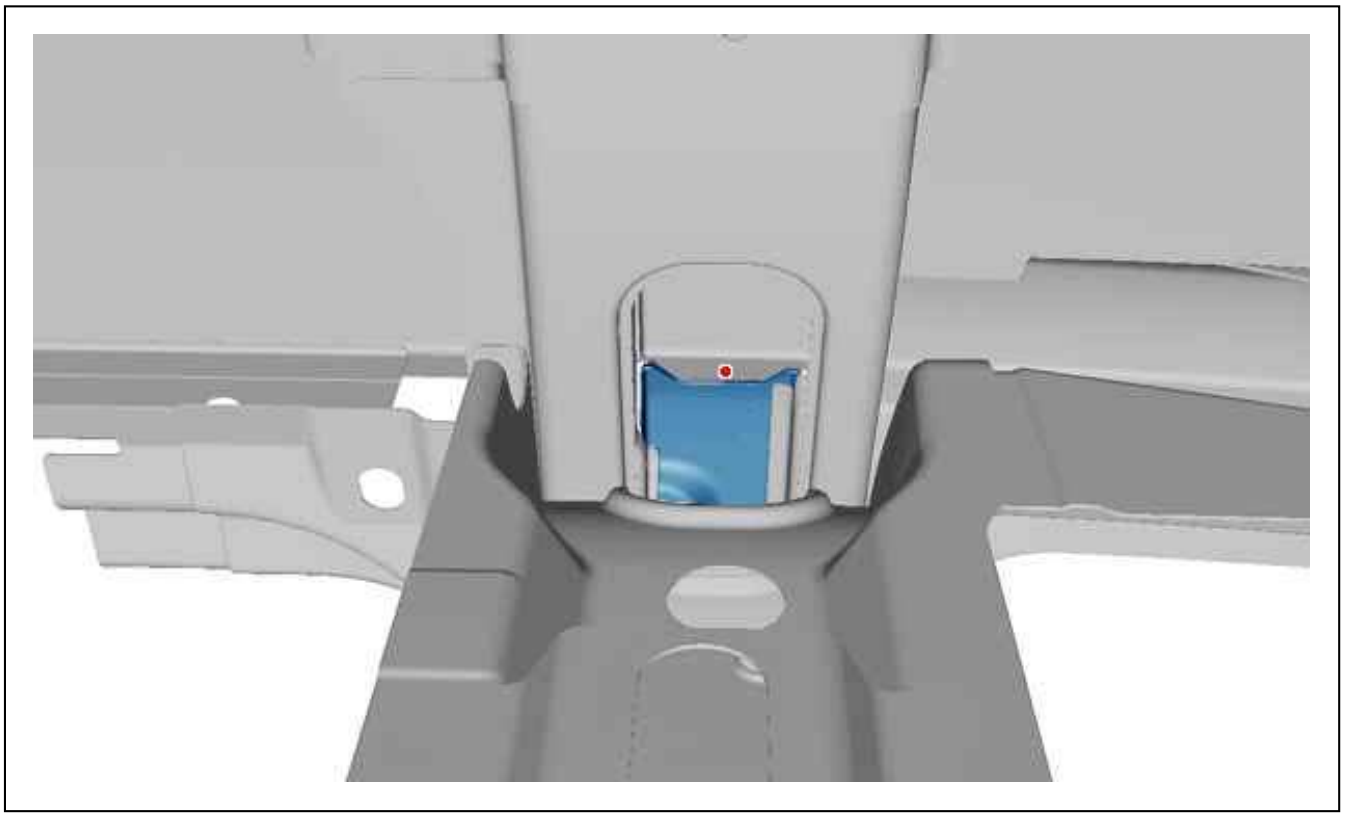

Figure : C4CP1Y6D

Figure 12.
Weld with plug welds.

8. Protection

Paint then spray into the hollow sections, product index C5, in the repair zone (see the relevant operation).

9. Reinitialisation

Reconnect the battery.

ESSENTIAL : Perform the operations to be carried out following reconnection of the battery.

REPLACEMENT : FRONT PILLAR STRENGTHENER

ESSENTIAL : All of the stripped surfaces must be protected by means of the approved electrolytic rezincing process (see the relevant operation).

ESSENTIAL : Observe the elementary rules of hygiene and safety (wear a face mask to protect against fumes and vapour - work in a well ventilated space).

1. Additional operations

Disconnect the battery.
Replace the partial cabin door frame (see the relevant operation).

2. Identification of the replacement parts



Figure : C4CP1Y8D

Figure 1.
Front pillar strengthener.

3. Preparation of the new part



Figure : C4CP1Y9D

Figure 2.
Mark then drill to Ø 8 mm for later plug welding (18 holes).
Prepare the mating edges .

4. Cutting out

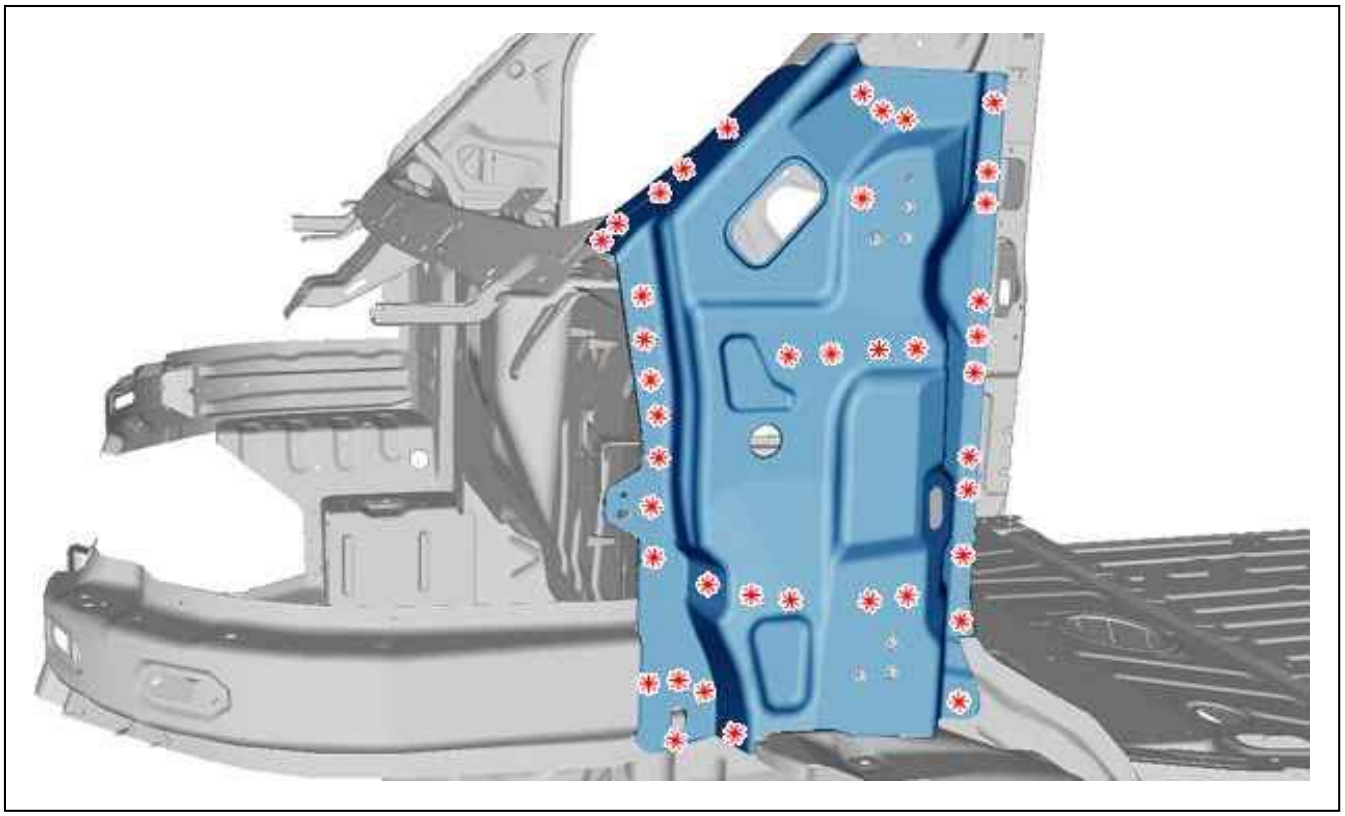

Figure : C4CP1YAD

Figure 3.
Cut out the spot welds .
Remove the front pillar strengthener.

5. Bodywork cleaning and preparation

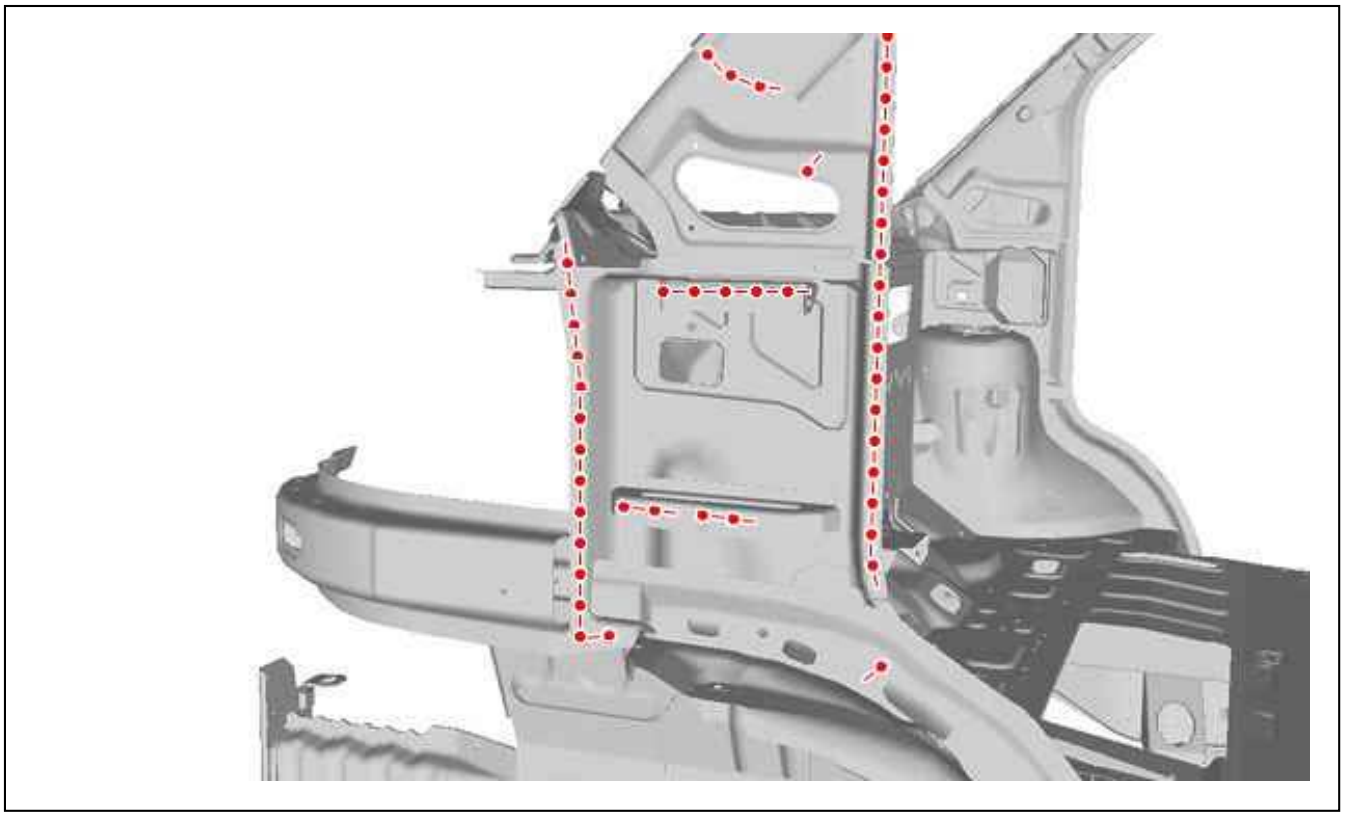

Figure : C4CP1YBD

Figure 4.
Align then prepare the mating edges.

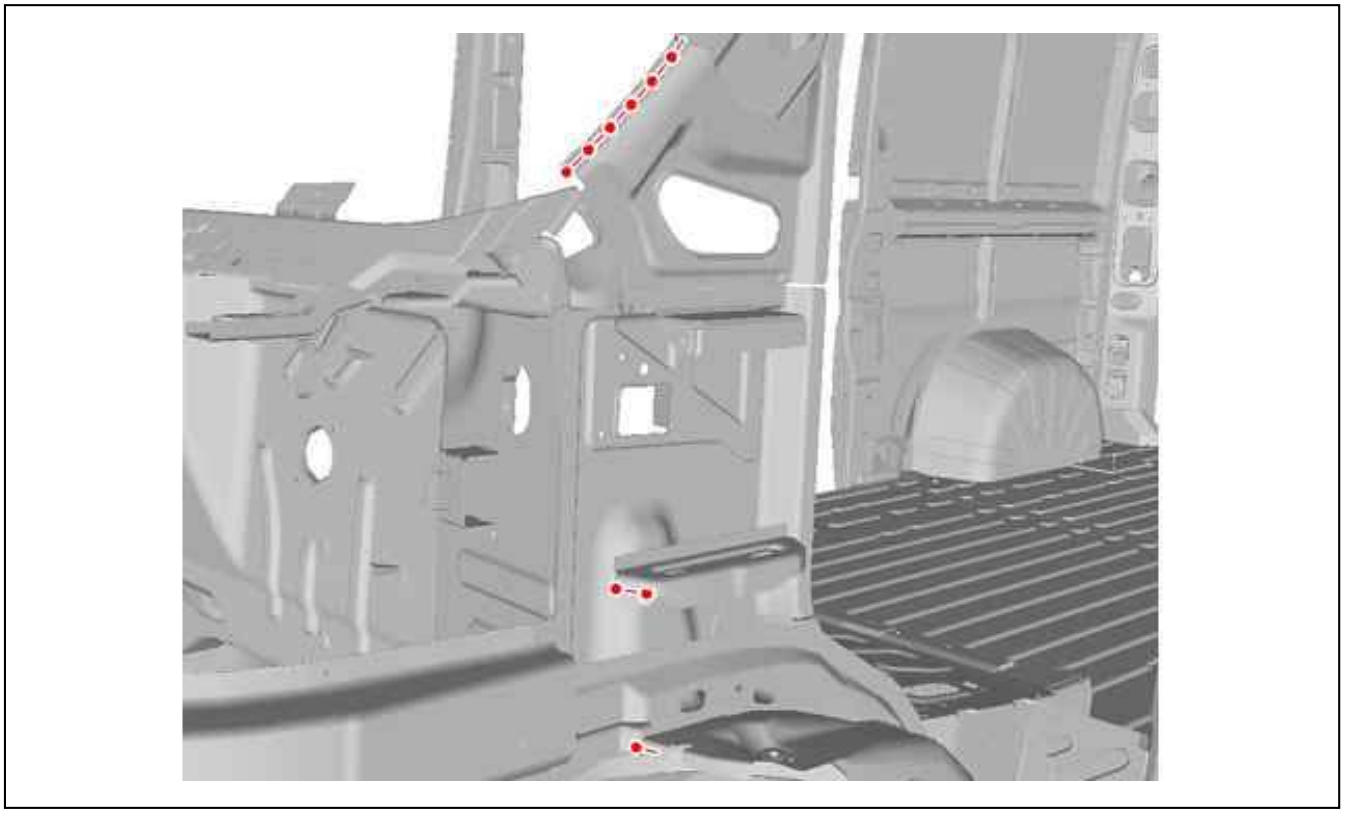

Figure : C4CP1YCD

Figure 5.

Prepare the mating edges .
Align the mating edges and protect them with a weldable primer.

6. Adjustment

Present the component for adjustment.
Check the fits and clearances (see the relevant operation).

7. Welding

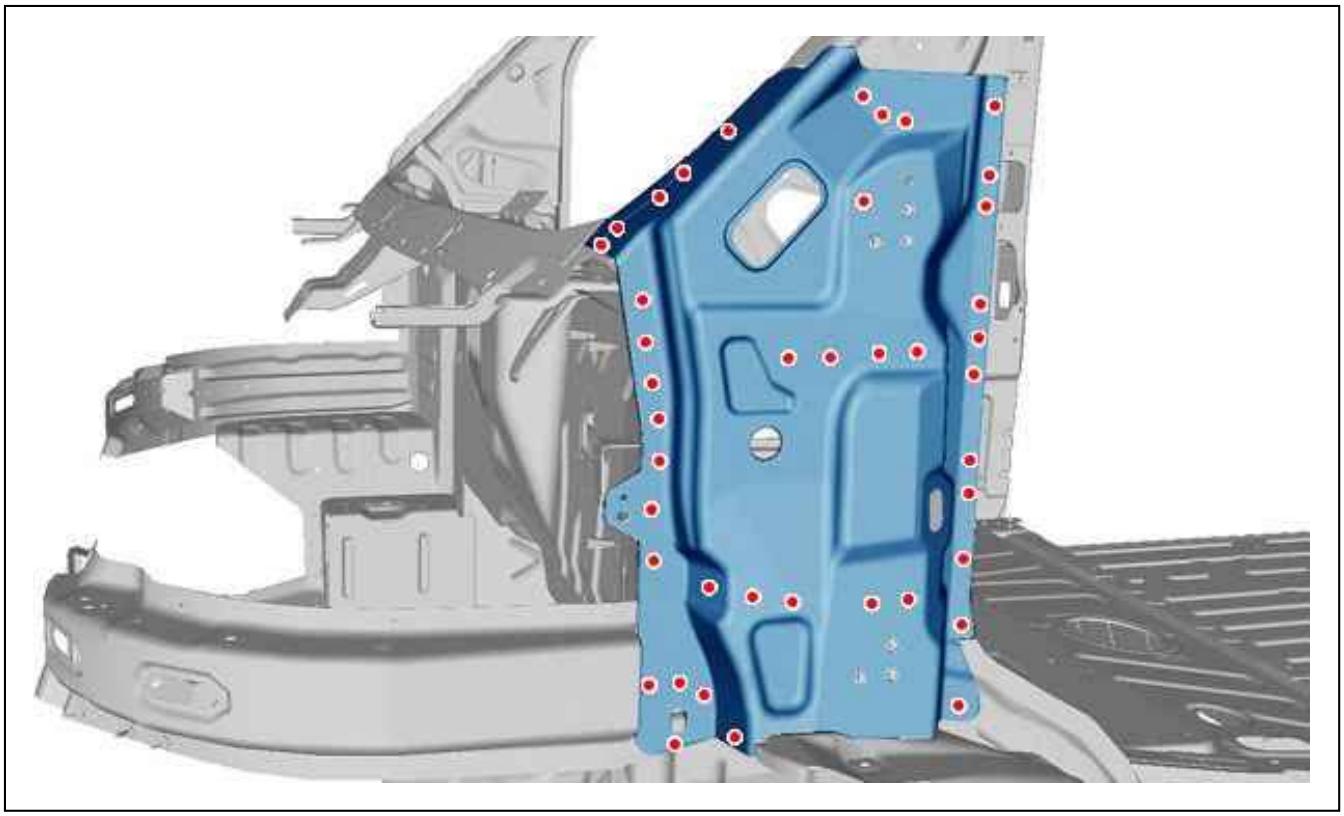

Figure : C4CP1YDD

Figure 6.
Weld with plug welds.
Grind the plug welds.
Weld with electric spot welds.

8. Protection

Paint then spray into the hollow sections, product index C5, in the repair zone (see the relevant operation).

9. Reinitialisation

Reconnect the battery.

ESSENTIAL : Perform the operations to be carried out following reconnection of the battery.

REPLACEMENT : WINDSCREEN PILLAR INNER PANEL

ESSENTIAL : All of the stripped surfaces must be protected by means of the approved electrolytic rezincing process (see the relevant operation).

ESSENTIAL : Observe the elementary rules of hygiene and safety (wear a face mask to protect against fumes and vapour - work in a well ventilated space).

1. Additional operations

Disconnect the battery.
Replacement :

- Partial cabin door frame (see the relevant operation)
- Door frame upper closing panel (see the relevant operation)
- Windscreen aperture pillar strengthener (see the relevant operation)
- Windscreen aperture upper crossmember (see the relevant operation)
- Windscreen aperture pillar strengthener (see the relevant operation)

2. Identification of the replacement parts



Figure : C4CP1YED

Figure 1.
Windscreen pillar inner panel.

3. Cutting out

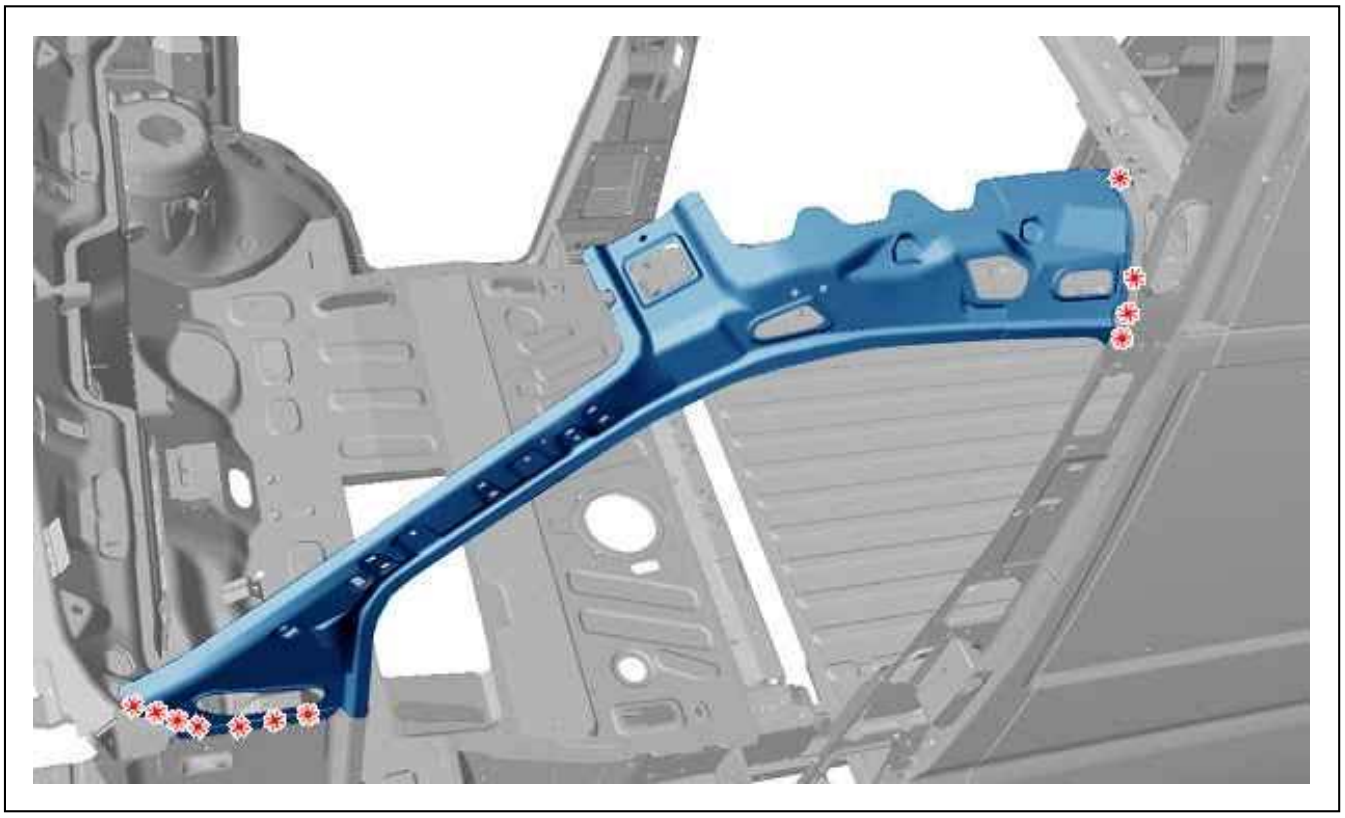

Figure : C4CP1YFD

Figure 2.
Cut out the spot welds .
Remove the windscreen aperture pillar inner panel.

4. Bodywork cleaning and preparation

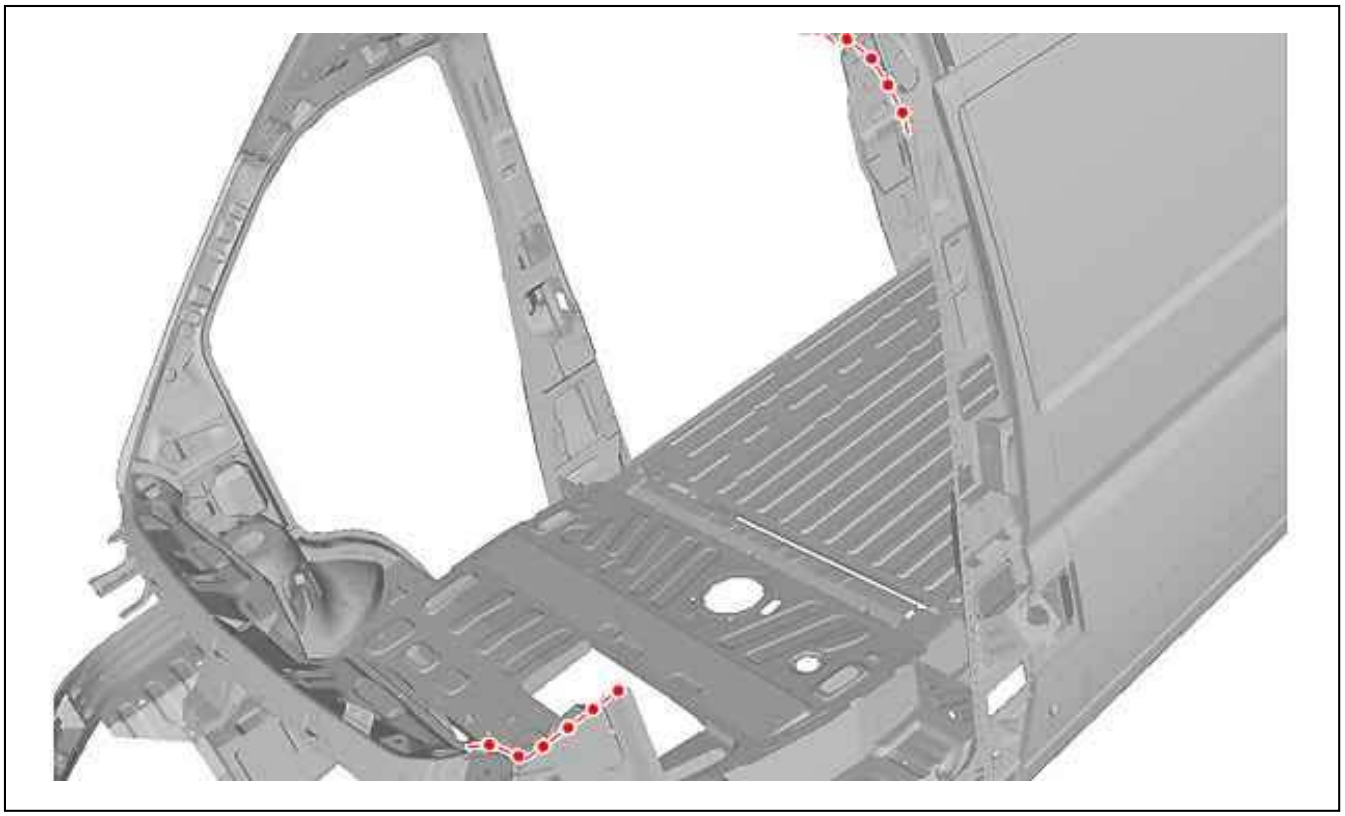

Figure : C4CP1YGD

Figure 3.
Prepare the mating edges .
Align the mating edges and protect them with a weldable primer.

5. Adjustment

Present the component for adjustment.
Check the fits and clearances (see the relevant operation).

6. Welding

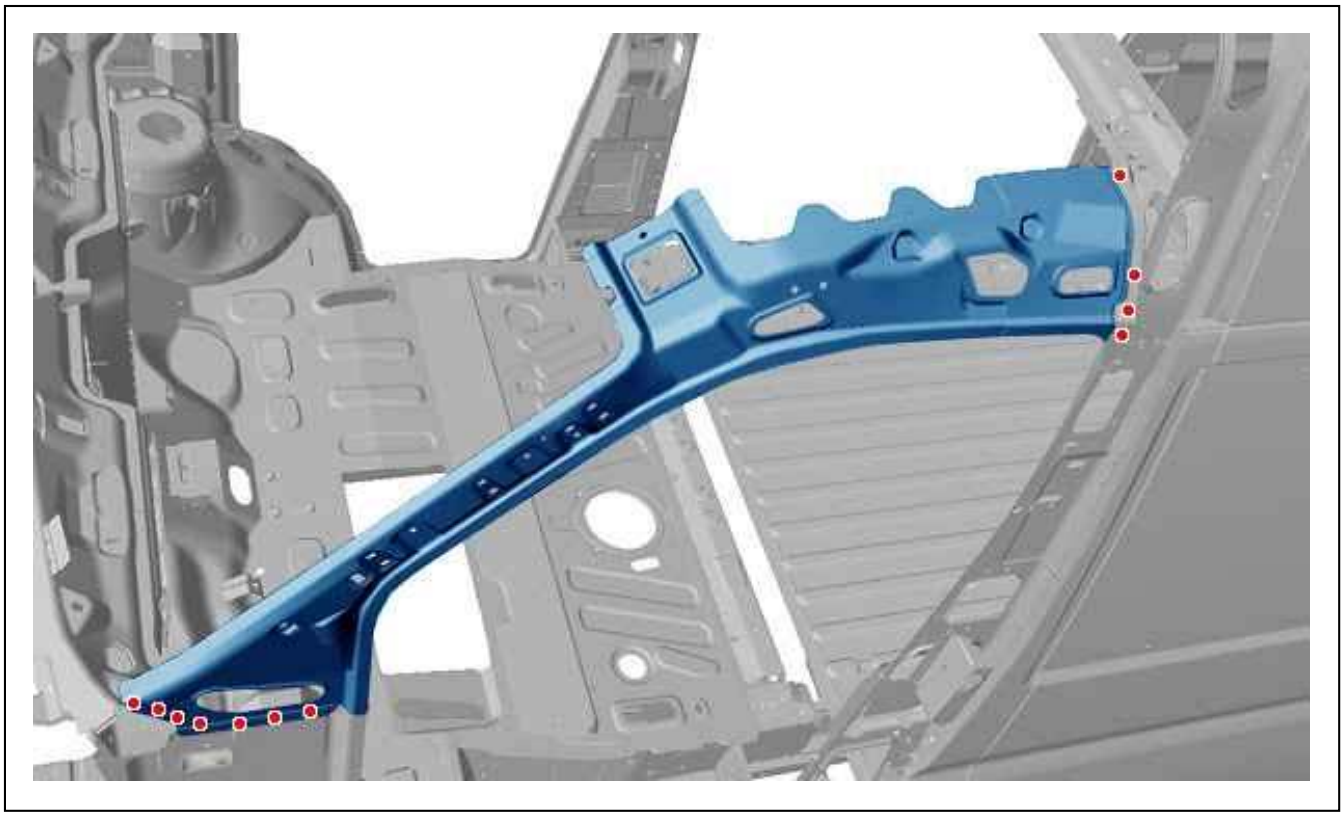

Figure : C4CP1YHD

Figure 4.
Weld with electric spot welds.

7. Protection

Paint then spray into the hollow sections, product index C5, in the repair zone (see the relevant operation).

8. Reinitialisation

Reconnect the battery.

ESSENTIAL : Perform the operations to be carried out following reconnection of the battery.

REPLACEMENT : WINDSCREEN APERTURE PILLAR STRENGTHENER

CAUTION : : All of the stripped surfaces must be protected by means of the approved electrolytic rezincing process (see corresponding procedure).

ESSENTIAL : : Observe the elementary rules of hygiene and safety (wear a face mask to protect against fumes and vapour - work in a well ventilated space).

1. Additional operations

Disconnect the battery.
Replacement.
Door frame assembly (see corresponding procedure).
Front roof front crossmember (see corresponding procedure).
Door pillar stiffener (see corresponding procedure).

2. Identification of the replacement parts

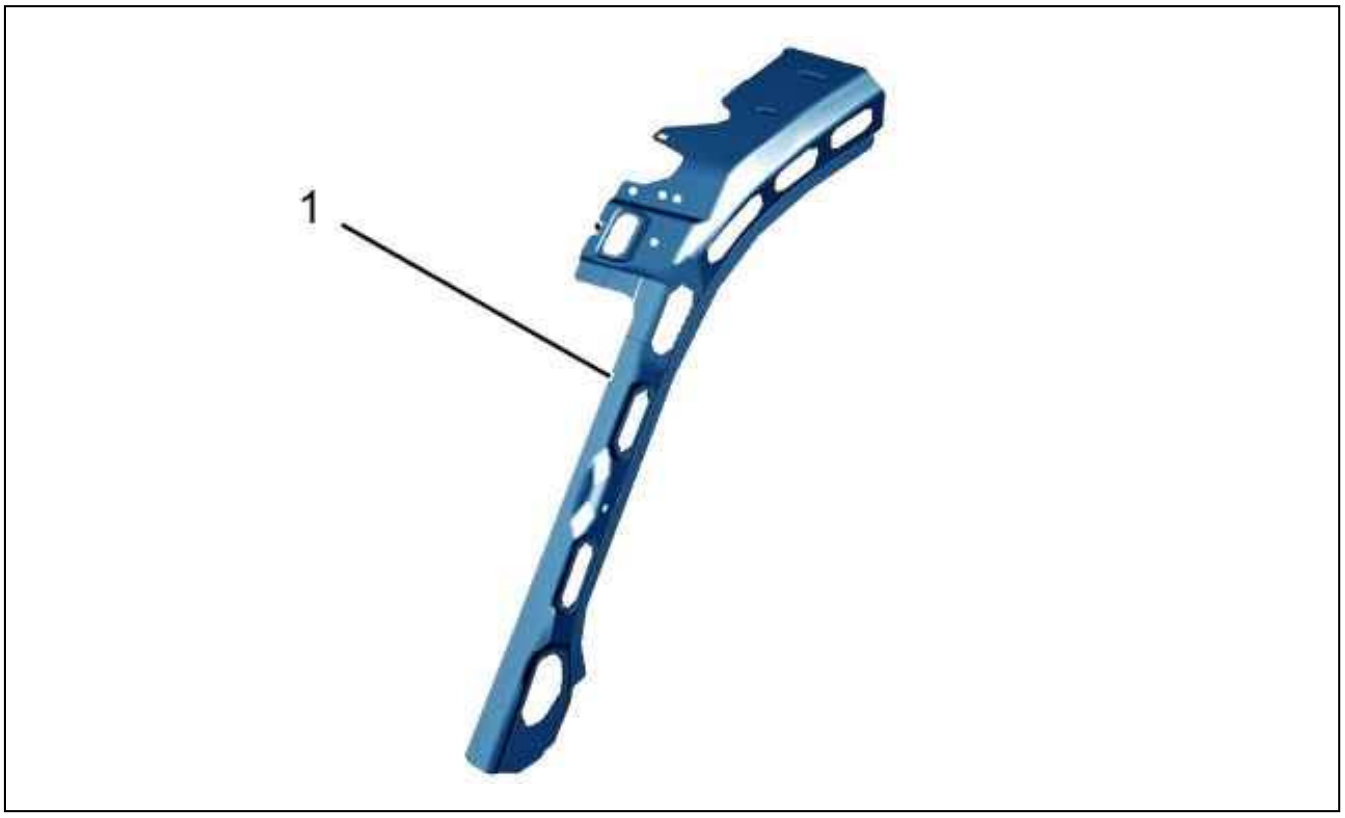

Figure : C4CP1YJD

Figure 1.
(1) Windscreen aperture pillar strengthener.

3. Cutting out

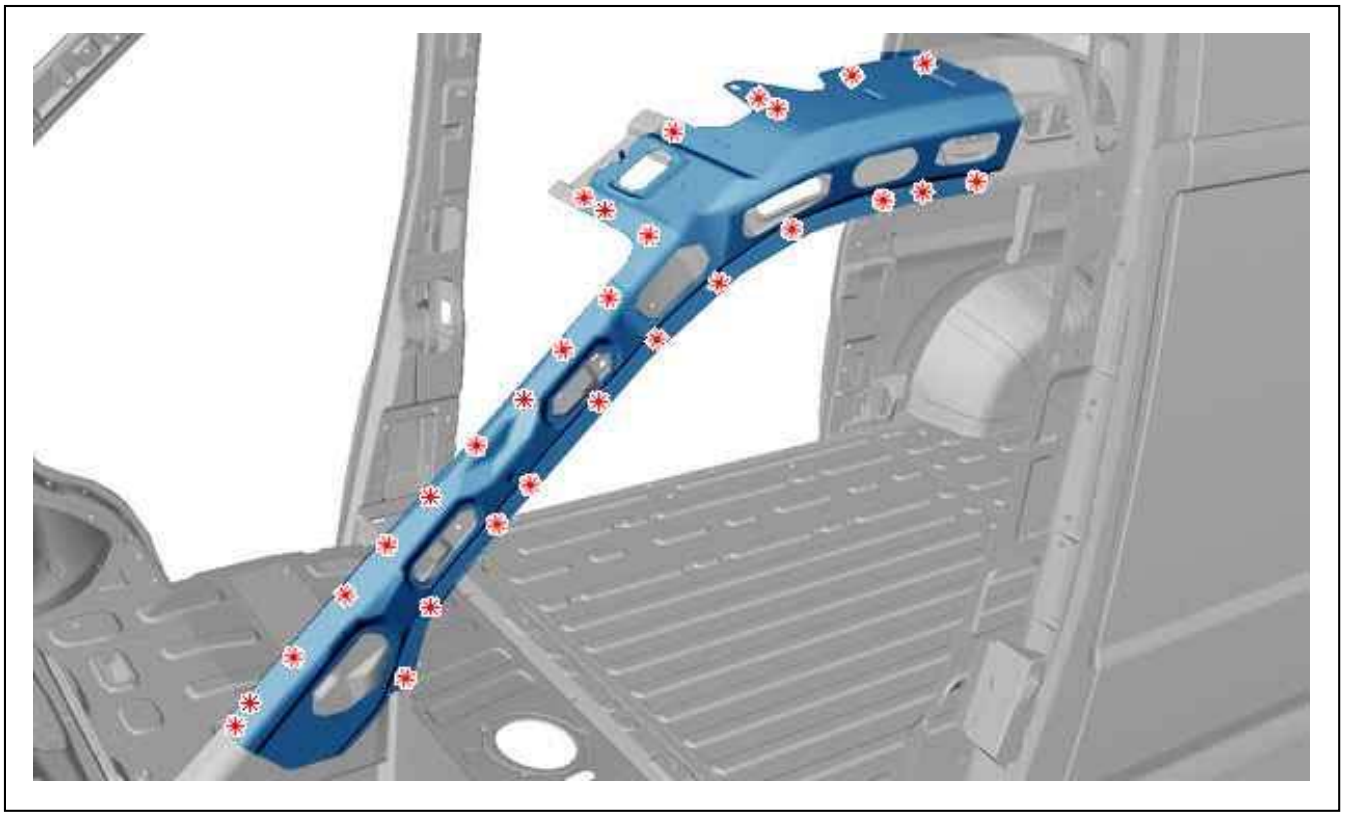

Figure : C4CP1YKD

Figure 2.
Cut out the spot welds (29).
Remove the windscreen aperture pillar strengthener.

4. Cleaning : Body preparation

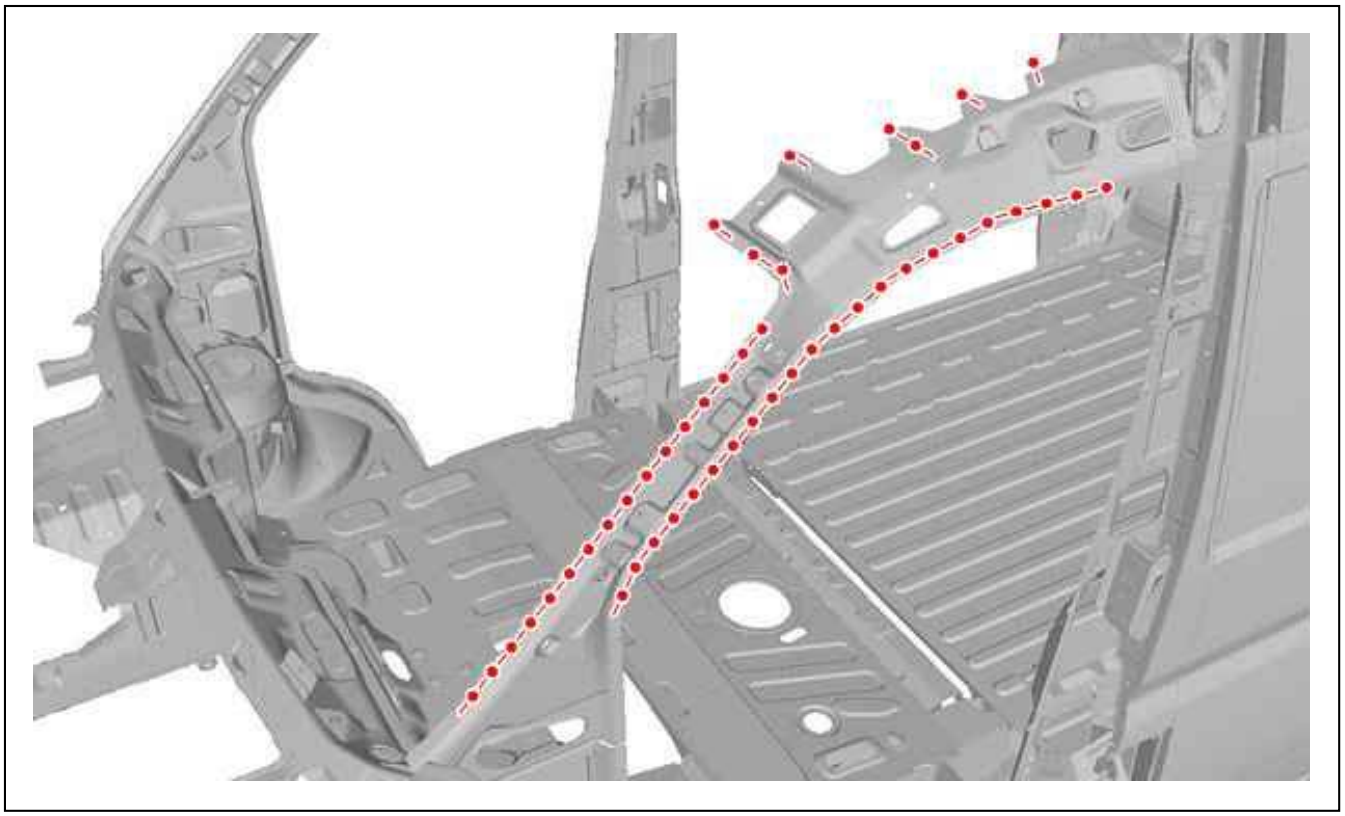

Figure : C4CP1YLD

Figure 3.
Prepare the mating edges .
Align the mating edges and protect them with a weldable primer.

5. Adjustment

Present the elements, allowing for adjustment.
Check the fits and clearances.

6. Welding

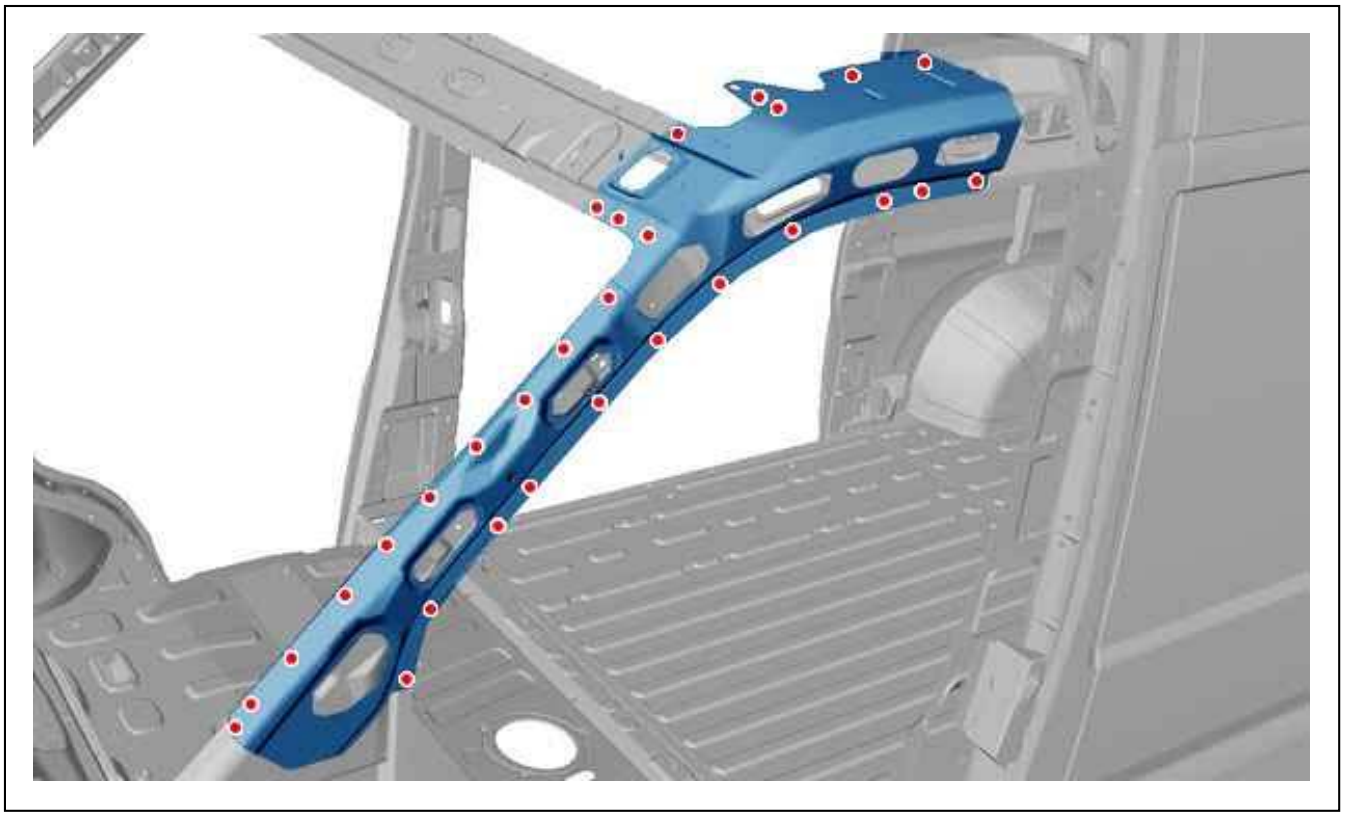

Figure : C4CP1YMD

Figure 4.
Weld with electric spot welds (29 welding spots).

7. - Protection

Paint then spray into the hollow sections, product index C5, in the repair zone (see corresponding procedure).

8. - Reinitialisation

Perform the operations to be carried out following reconnection of the battery.

REPLACEMENT : PARTIAL FRONT RH OUTER PILLAR

ESSENTIAL : All of the stripped surfaces must be protected by means of the approved electrolytic rezincing process (see the relevant operation).

ESSENTIAL : : Observe the elementary rules of hygiene and safety (wear a face mask to protect against fumes and vapour - work in a well ventilated space).

1. Additional operations

Disconnect the battery.
Removing - Refitting :

- Water projection seal
- Front door striker plate

Release the wiring harnesses.

2. Identification of replacement parts

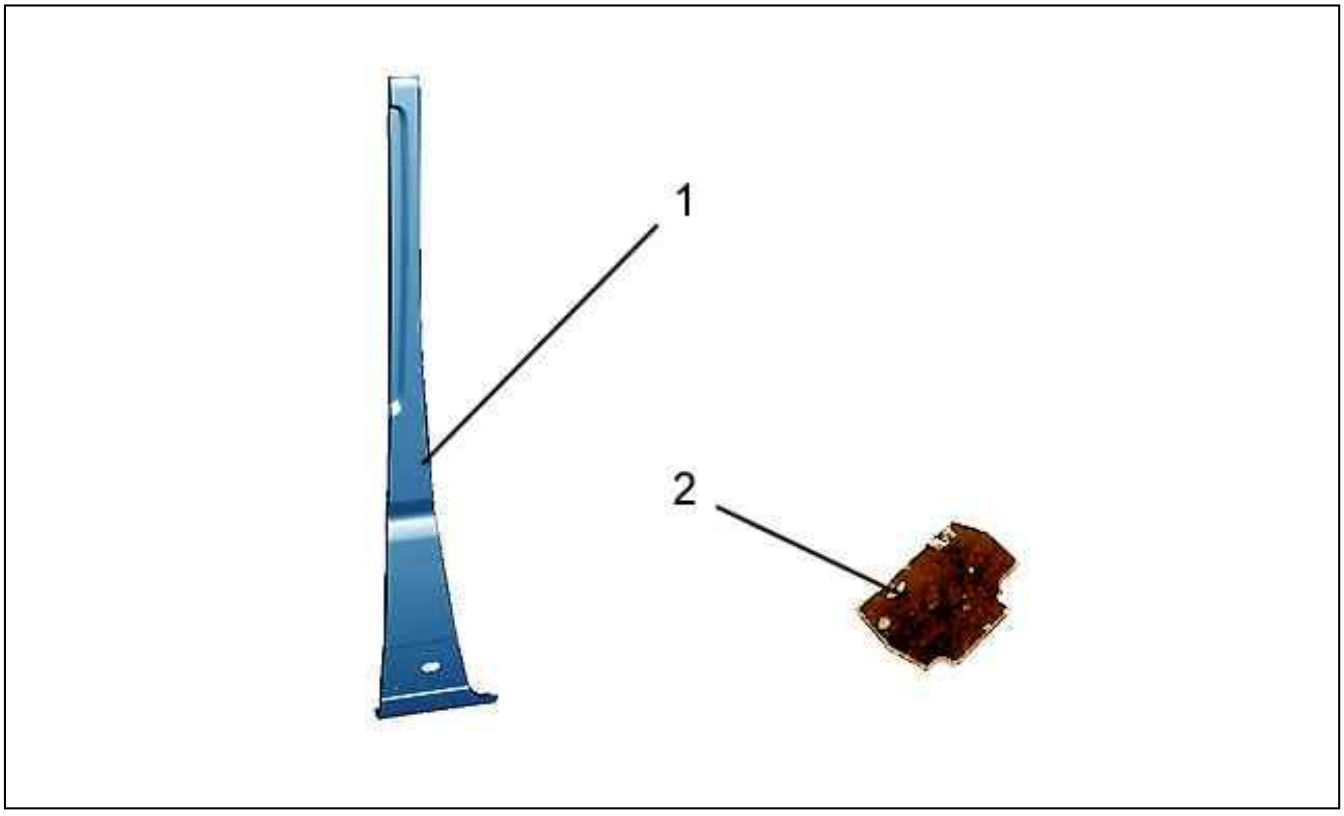

Figure : C4CP1UDD

Figure 1.
(1) Front RH outer pillar.
(2) Inflating insert .

3. Replacement part preparation

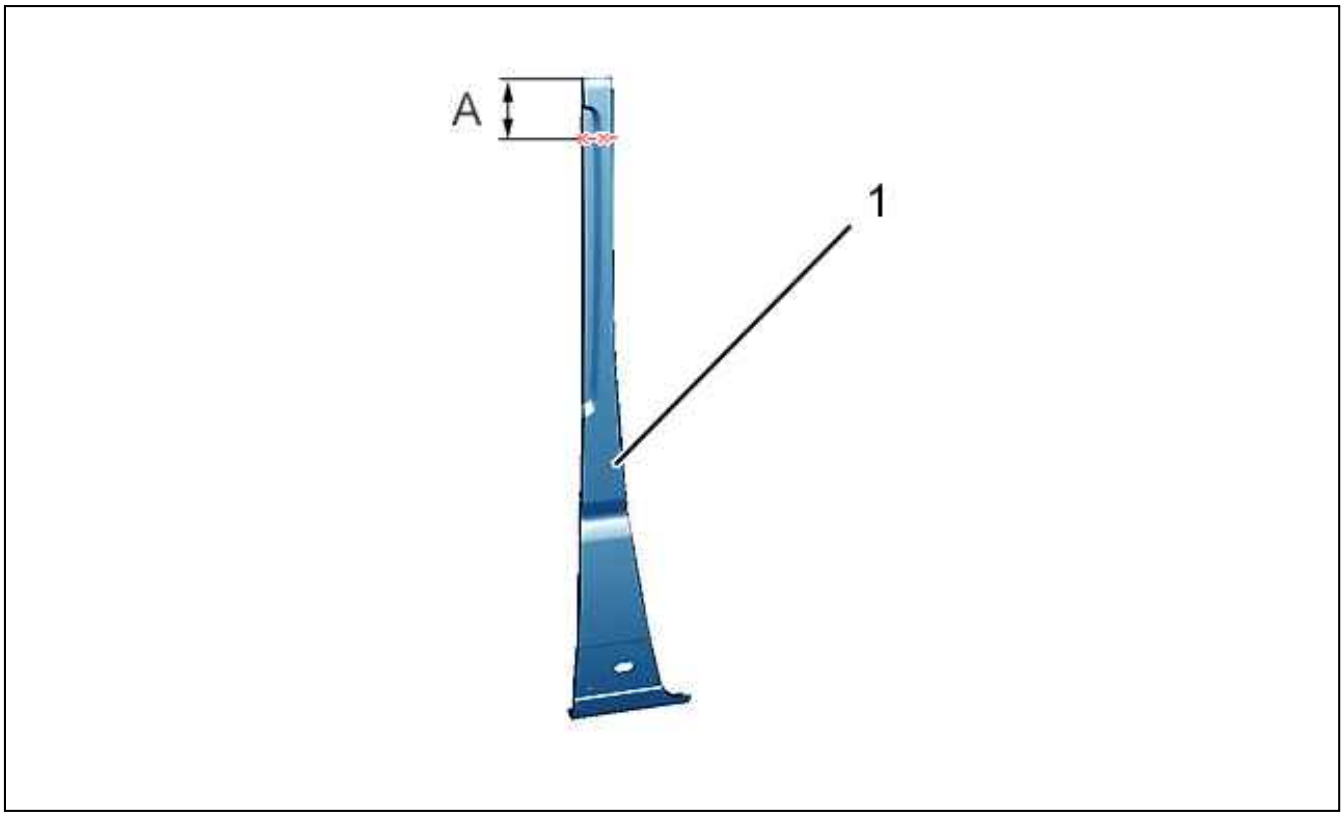

Figure : C4CP1UED

Figure 2.
(1) Front RH outer pillar.
Mark then cut (final cutting).
Prepare the mating edges .

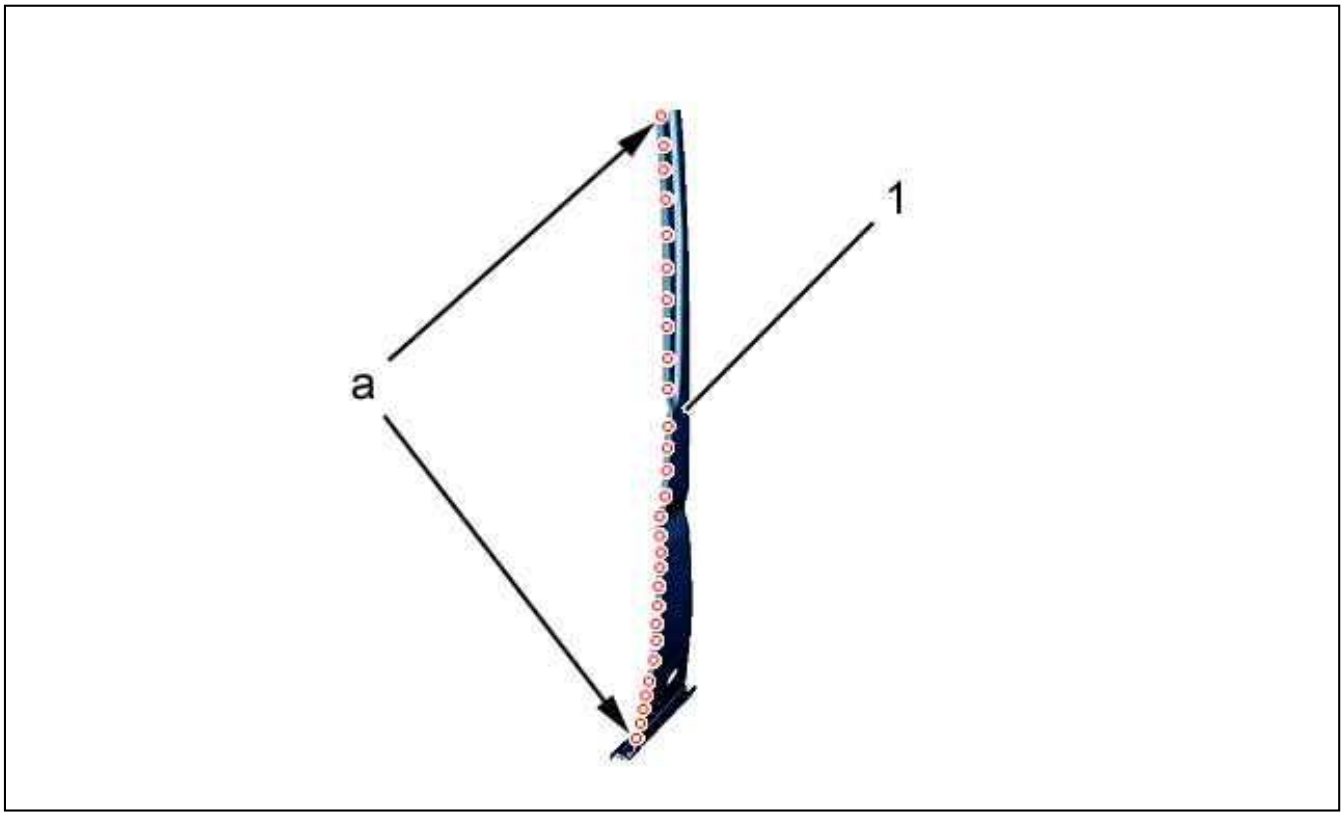

Figure : C4CP1UFD

Figure 3.
(1) Front RH outer pillar.
Mark then drill to Ø 6 mm for later plug welding (27 holes).
Repeat the operation on the opposite side (at "a").
Prepare the mating edges .

4. Cutting out

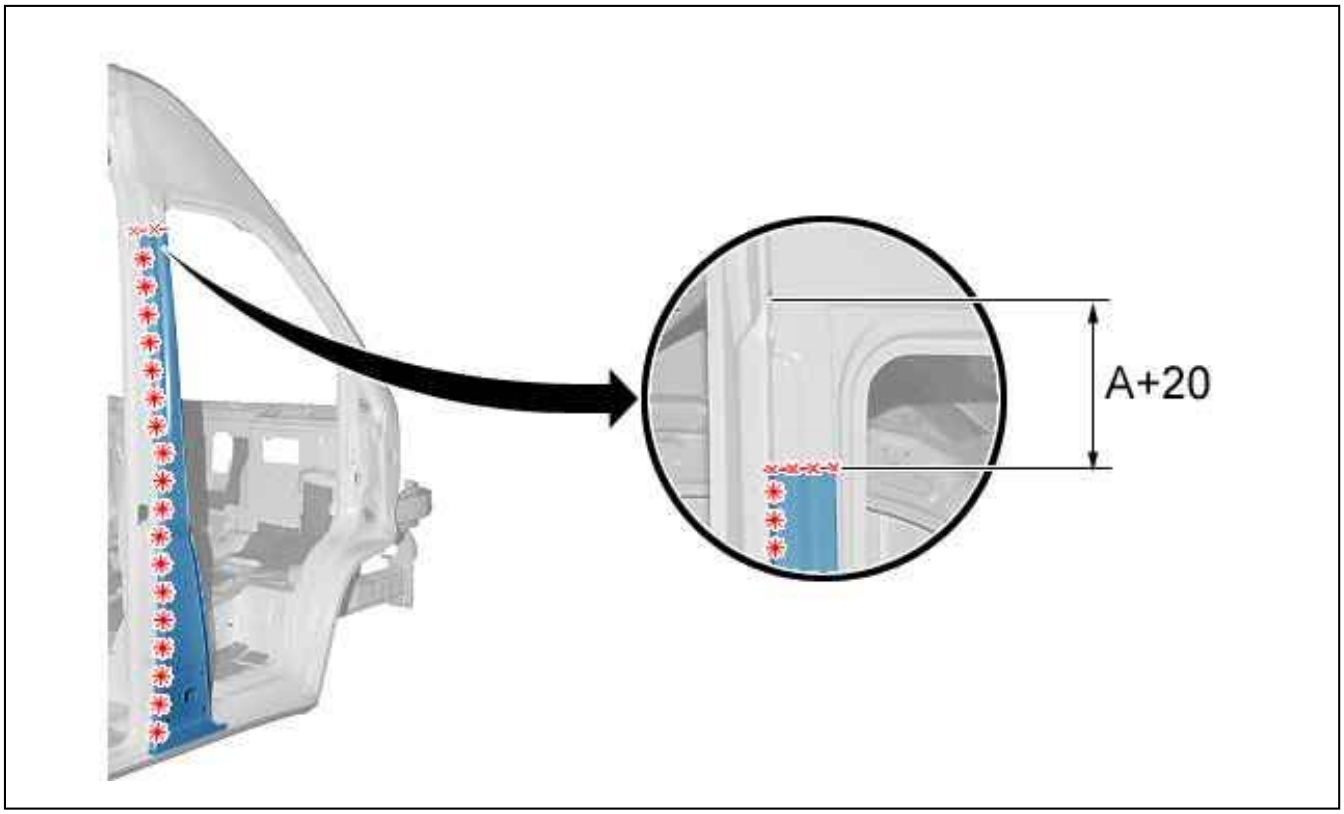

Figure : C4CP1UGD

Figure 4.
Cut out the spot welds .
Mark then cut (preliminary cut).

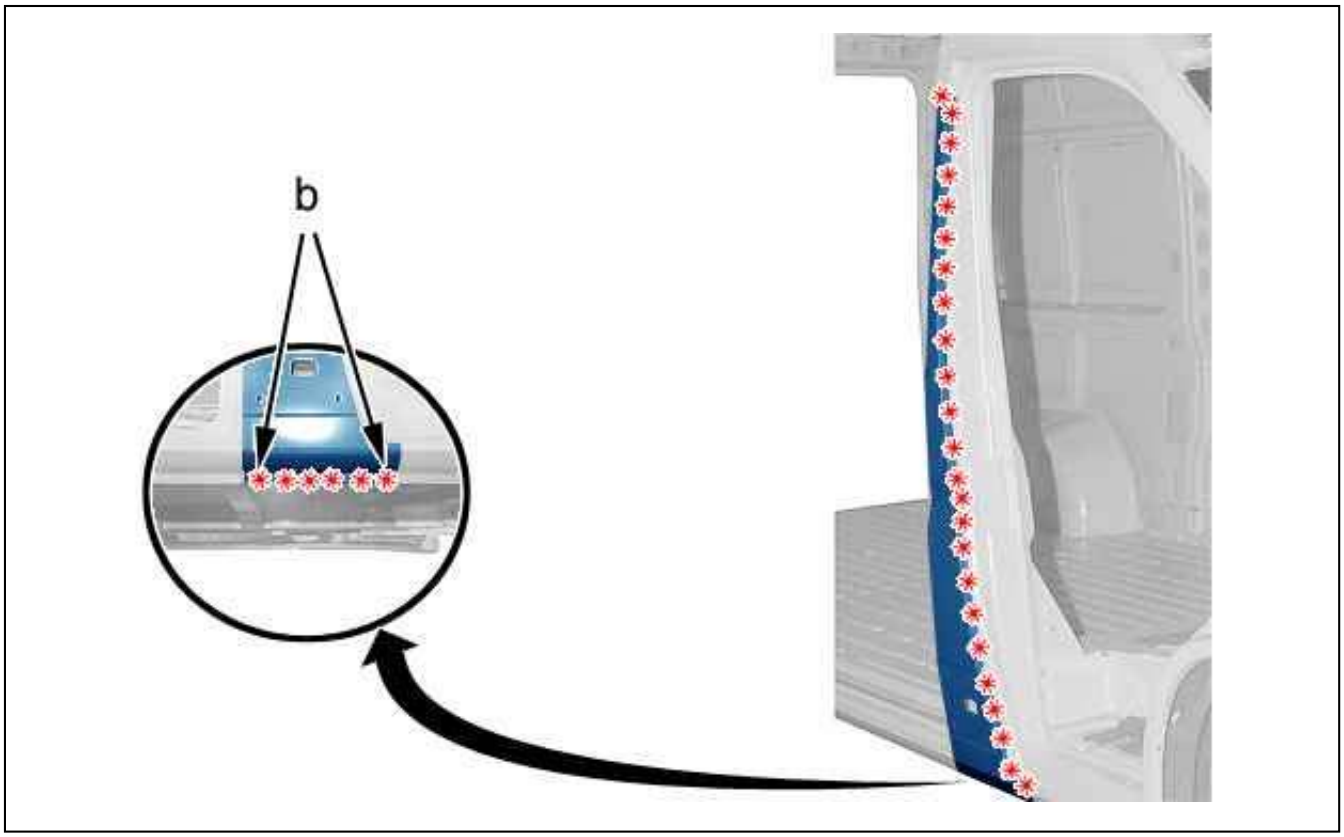

Figure : C4CP1UHD

Figure 5.
Cut out the spot welds (at "b").
Cut out the spot welds .
Remove the partial front RH outer pillar.

5. Bodywork cleaning and preparation

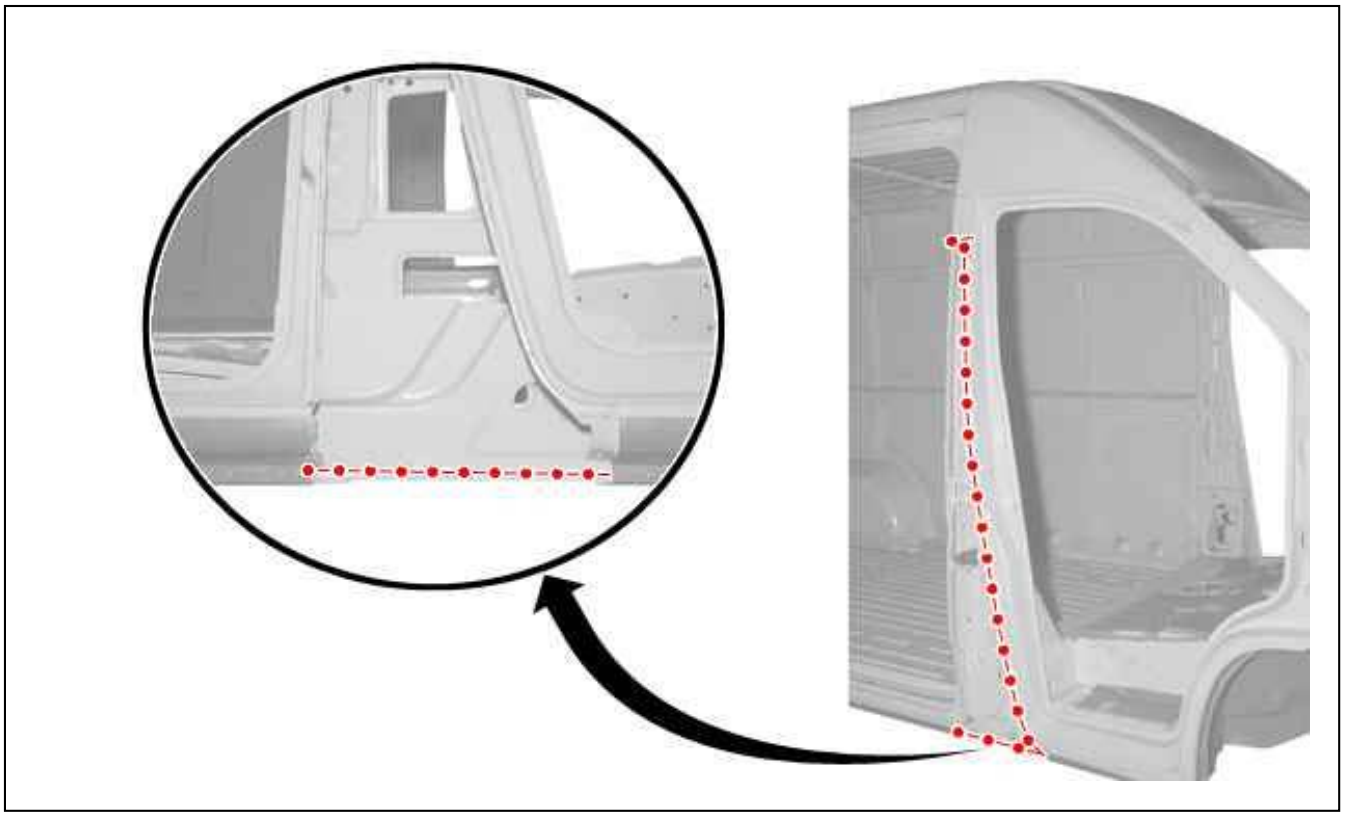

Figure : C4CP1UJD

Figure 6.
Prepare the mating edges .
Align the mating edges and protect them with a weldable primer.

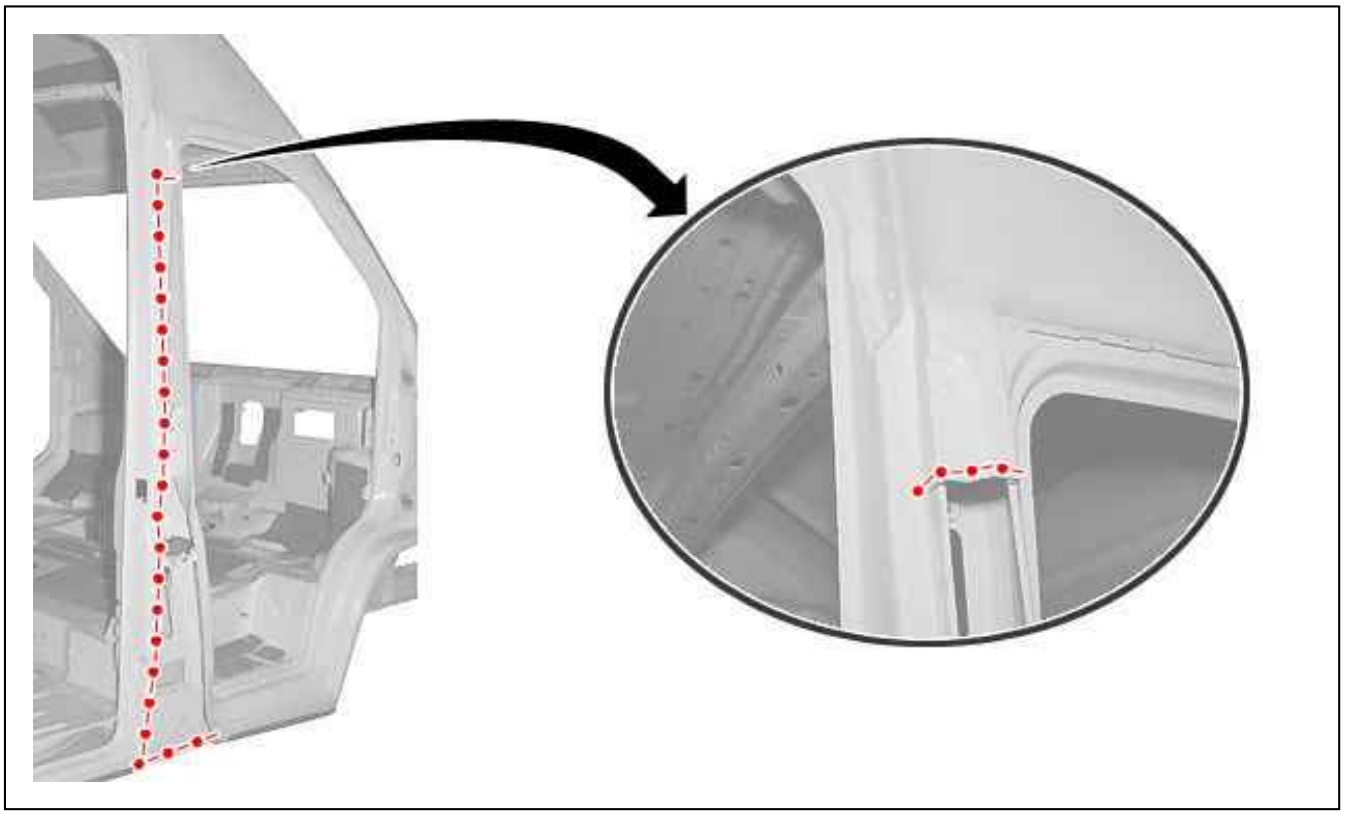

Figure : C4CP1UKD

Figure 7.
Prepare the mating edges .
Align the mating edges and protect them with a weldable primer.

6. Adjustment

Fit the inflating insert .
Present the elements, allowing for adjustment.
Check the fits and clearances (see the relevant operation).

7. Welding

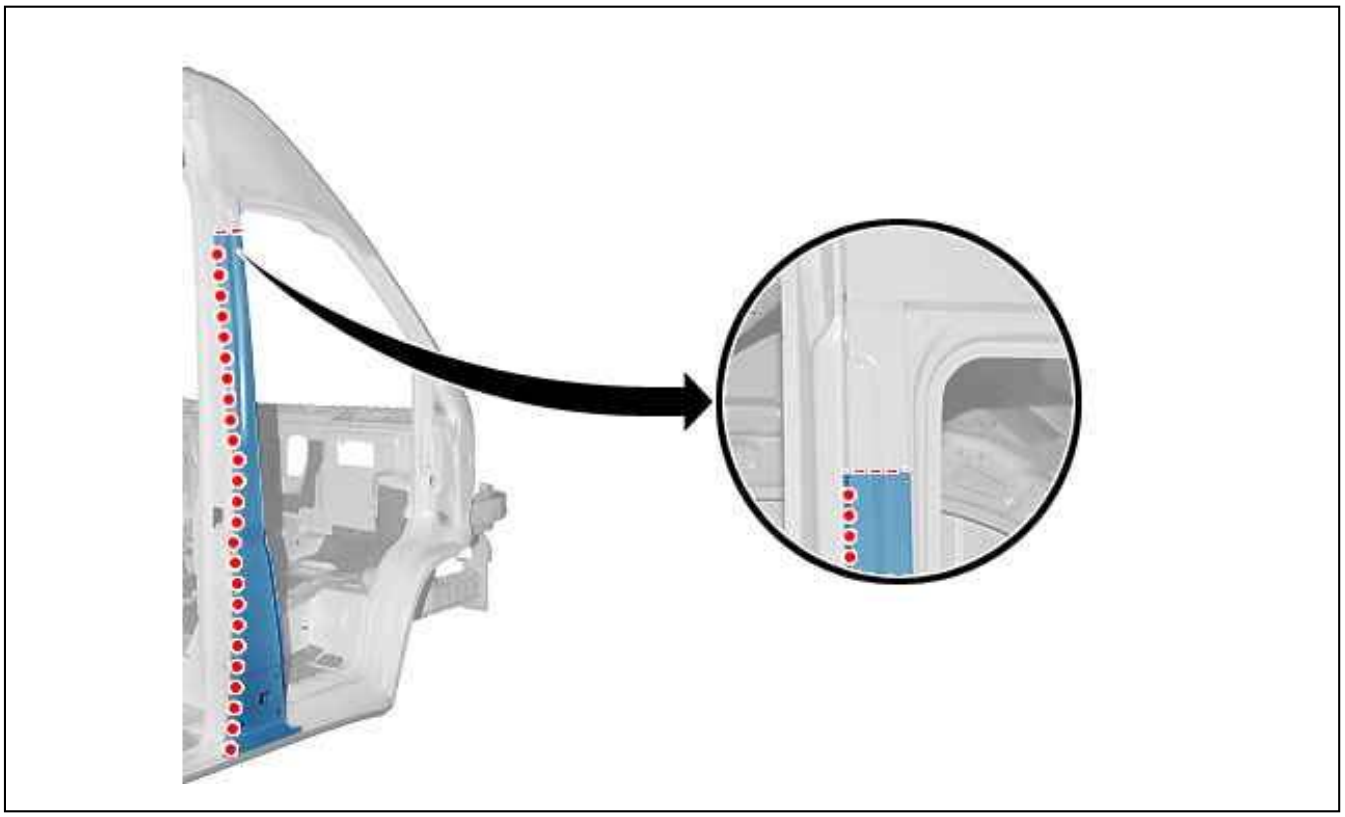

Figure : C4CP1ULD

Figure 8.
Weld using successive beads (MIG or MAG).
Grind the welds.
Weld with MIG or MAG spot welds.
Grind the spot welds.

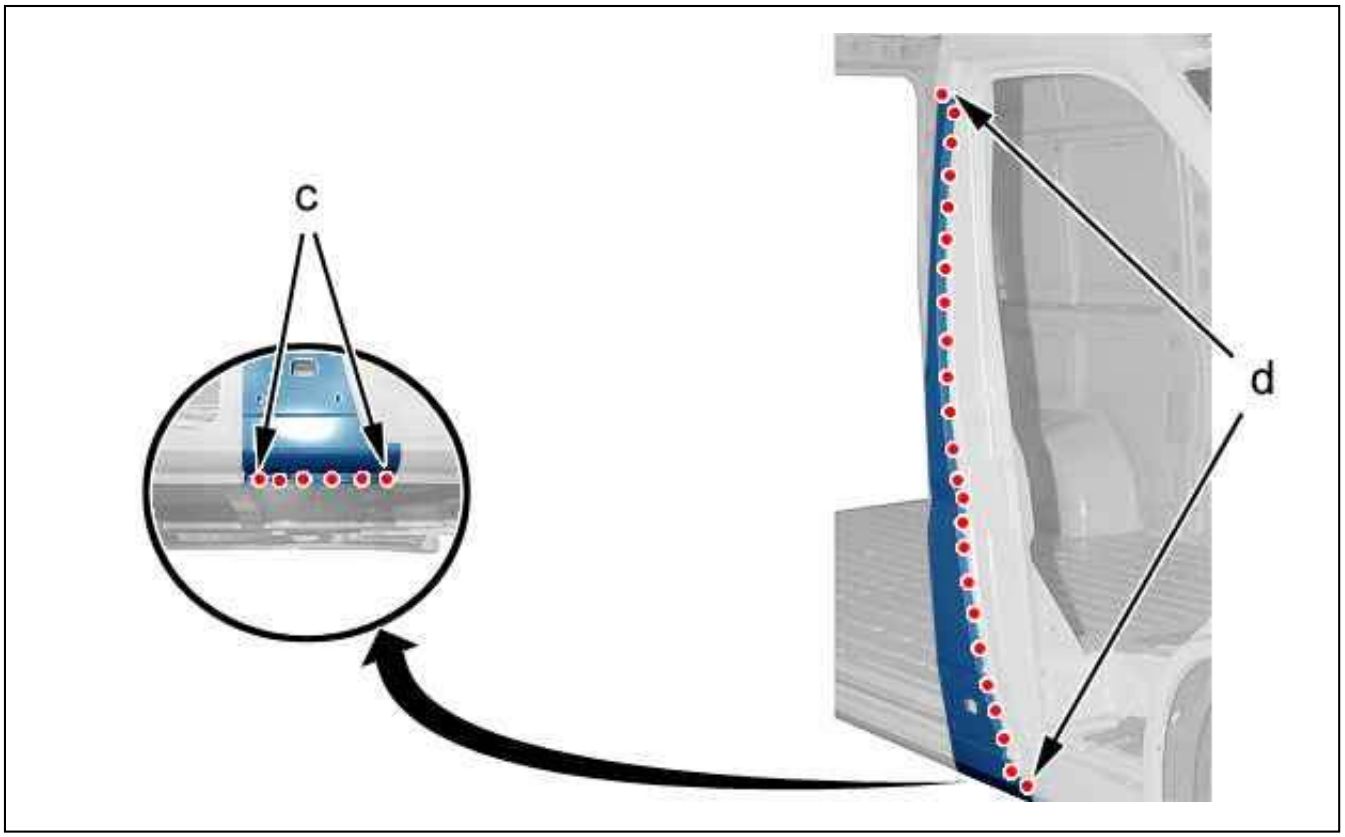

Figure : C4CP1UMD

Figure 9.
Weld with electric spot welds (at "c").
Weld with MIG or MAG spot welds (at "d").
Grind the spot welds.

8. Sealing

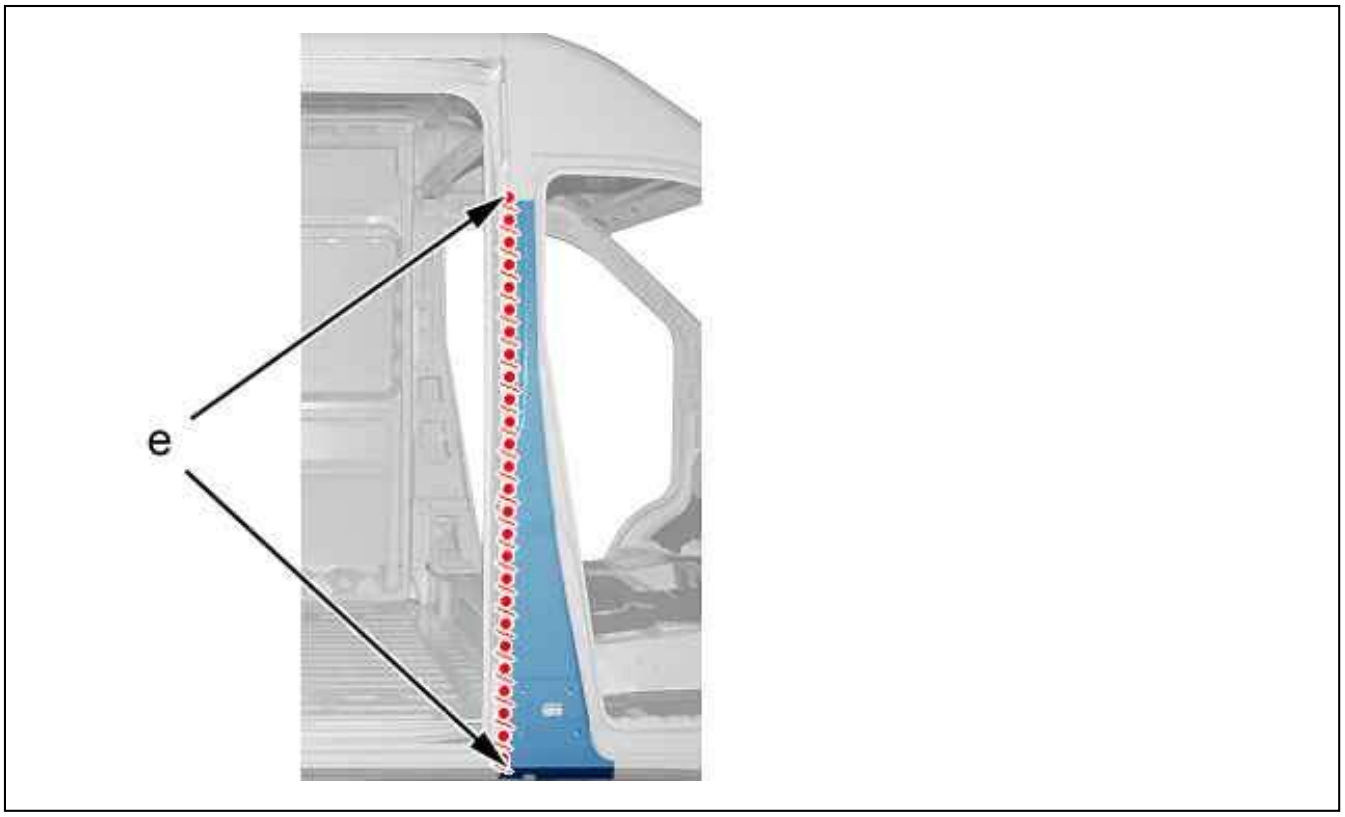

Figure : C4CP1UND

Figure 10.
Apply a phosphate-print layer on the zone laid bare.
Apply a sealing mastic of type " A4" (see the relevant operation).
Repeat the operation on the opposite side (at "e").

9. Protection

Paint then spray into the hollow sections, product index C5, in the repair zone (see the relevant operation).
Apply an anti-chip layer (see the relevant operation).



Figure : C4CP1UPD

Inject polyurethane foam " C5", at the location of the inflating insert (following the arrow).

10. Reinitialisation

Reconnect the battery.

ESSENTIAL : Perform the operations to be carried out following reconnection of the battery.

REPLACEMENT : INTERMEDIATE UPPER RH CLOSING PANEL

ESSENTIAL : All of the stripped surfaces must be protected by means of the approved electrolytic rezincing process . (see the relevant operation).

ESSENTIAL : Observe the elementary rules of hygiene and safety (wear a face mask to protect against fumes and vapour - work in a well ventilated space).

1. Additional operations

Disconnect the battery.
Removing - refitting :

- Sliding side door trim
- The side sliding door

2. Identification of the replacement parts



Figure : C4CP20BD

Figure 1.
(1) Intermediate upper RH closing panel .

3. Preparation of the new part



Figure : C4CP20CD

Figure 2.
Mark then drill to Ø 6 mm for later plug welding (16 holes).
Prepare the mating edges .

4. Cutting out

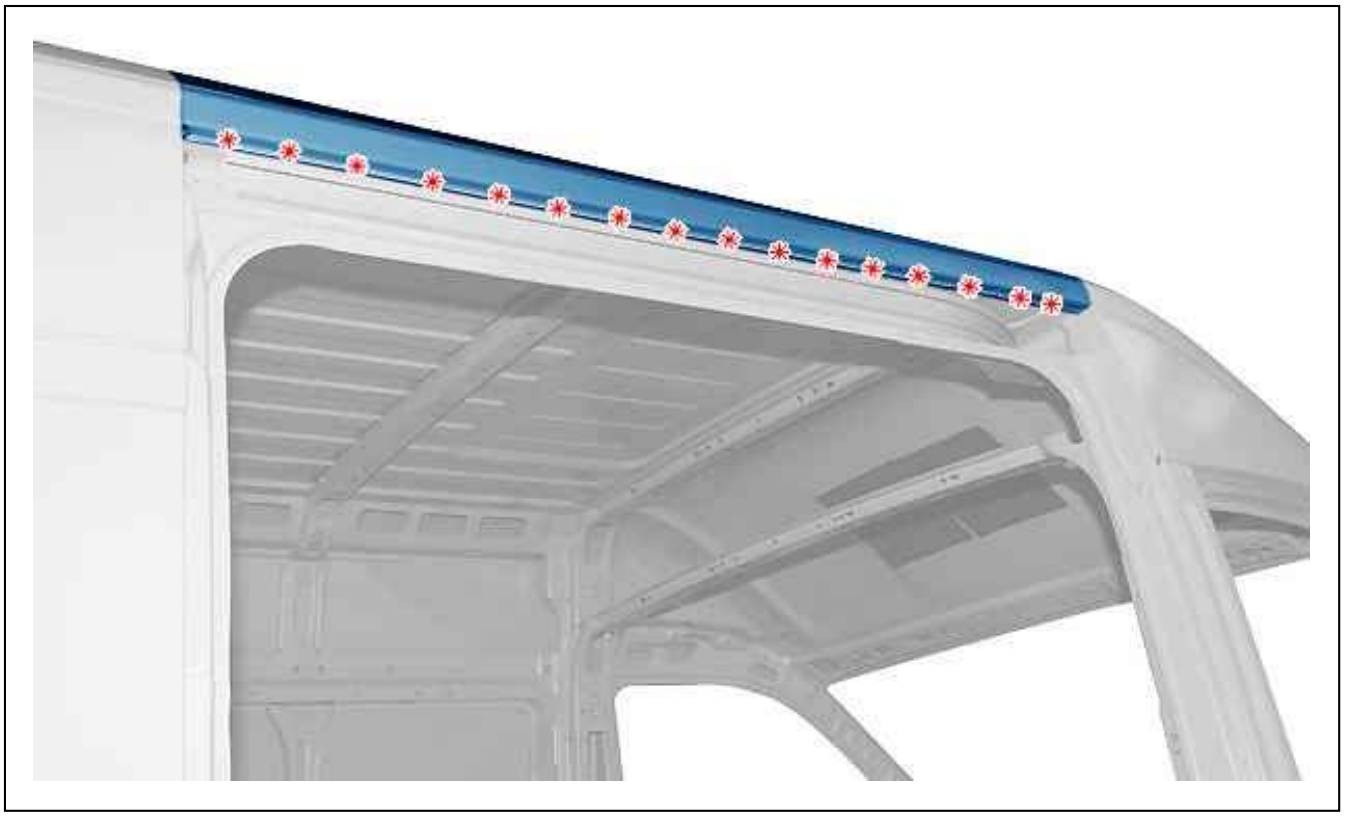

Figure : C4CP20DD

Figure 3.
Cut out the spot welds .

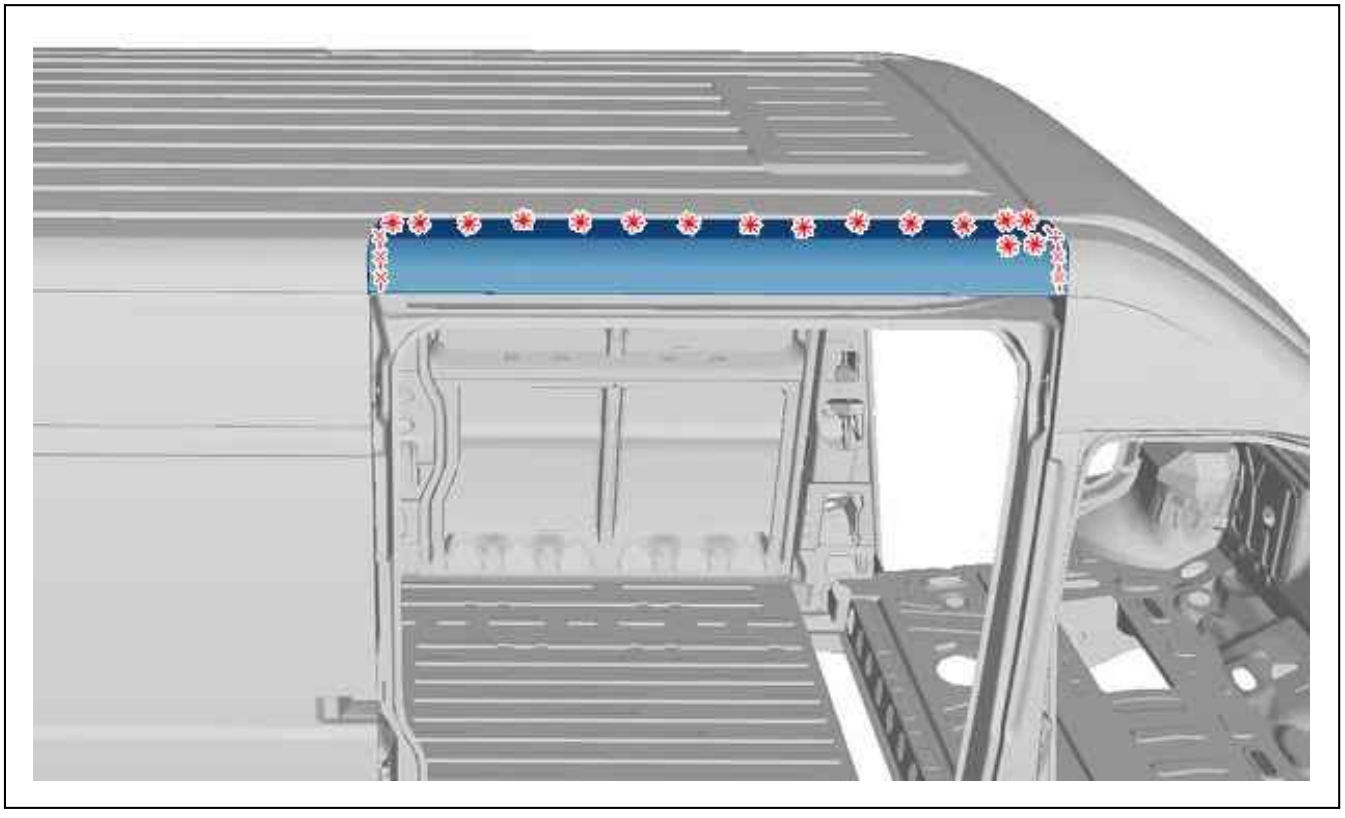

Figure : C4CP20ED

Figure 4.

Cut the closing panel 1 cm approx. from the edge so as to separate the RH and L.H. rows of weld spots more easily.
Cut out the spot welds .
Remove the intermediate upper RH closing panel .

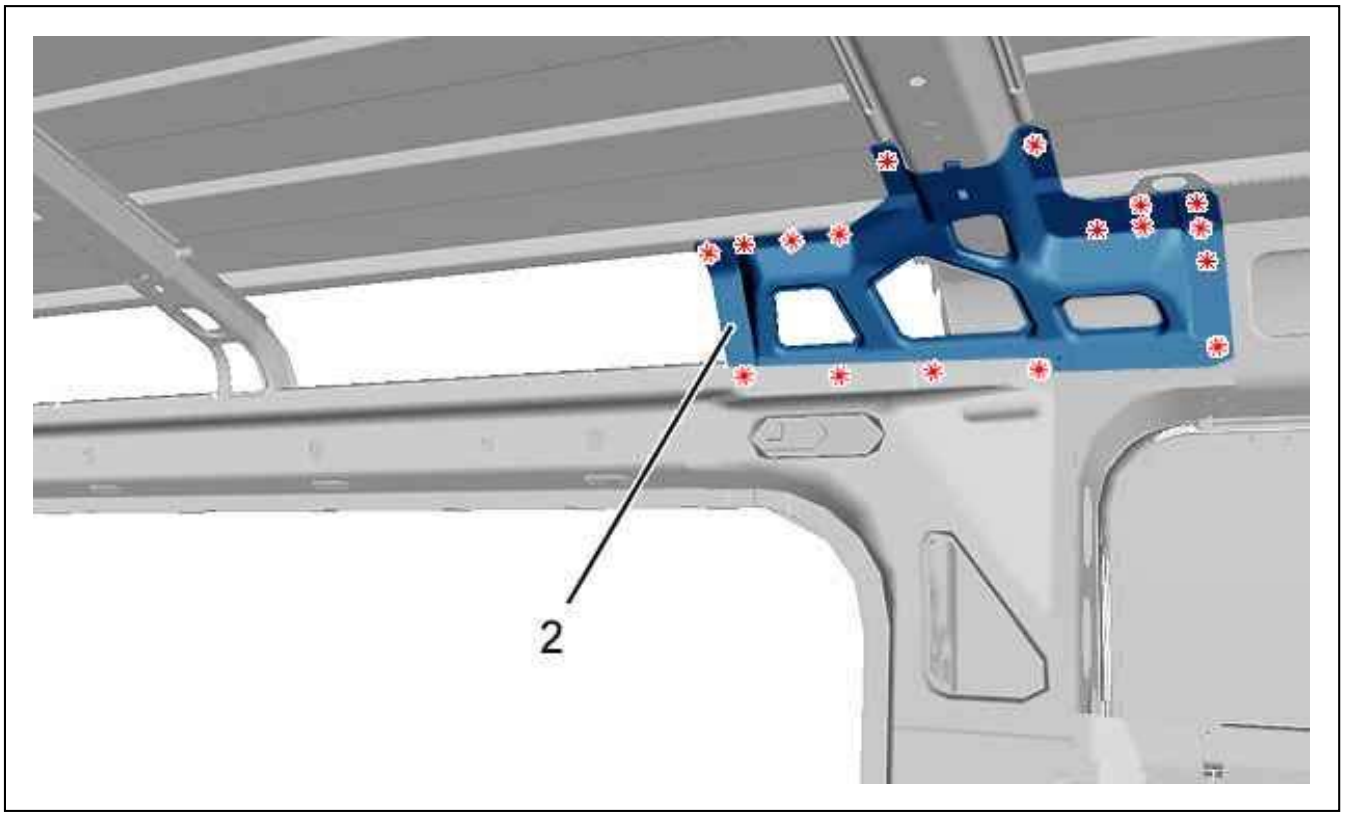

Figure : C4CP20FD

Figure 5.
Cut out the spot welds .
Remove the roof central bow RH support (2).

5. Bodywork cleaning and preparation

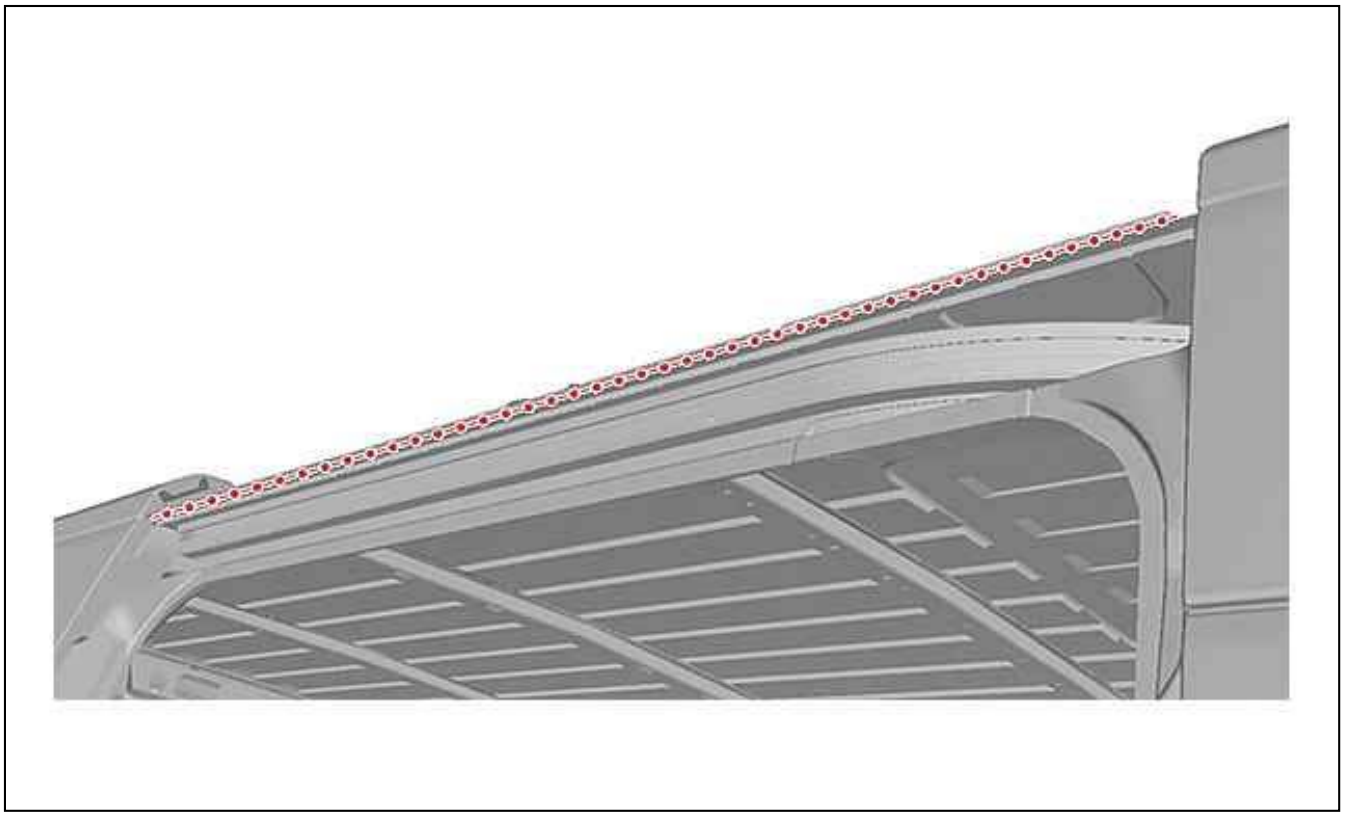

Figure : C4CP20GD

Figure 6.
Align then prepare the mating edges.

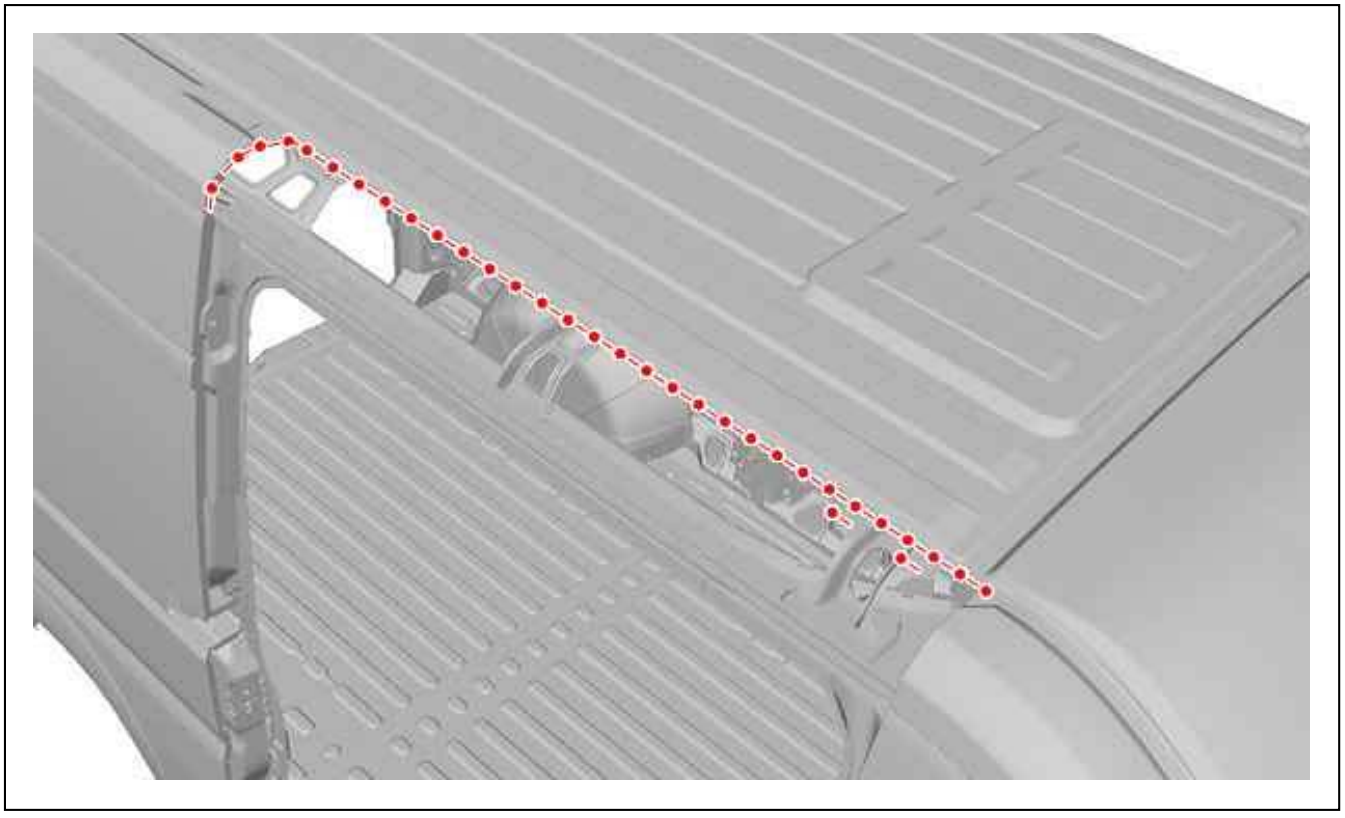

Figure : C4CP20HD

Figure 7.

Protect the edges of the original and the new part with welding primer.

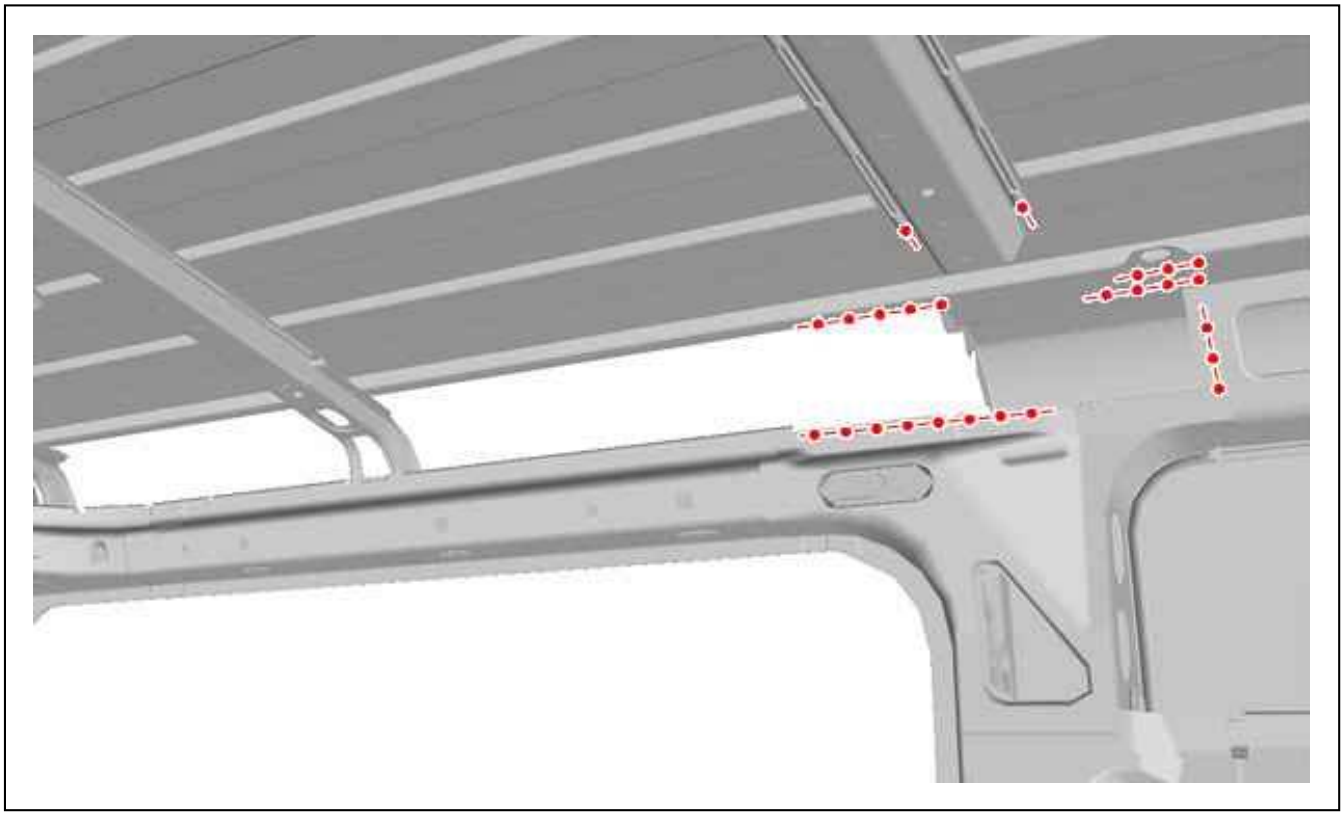

Figure : C4CP20JD

Figure 8.
Prepare the mating edges .
Align the mating edges and protect them with a weldable primer.

6. Adjustment

Present the component for adjustment.
Check the fits and clearances (see the relevant operation).

7. Welding

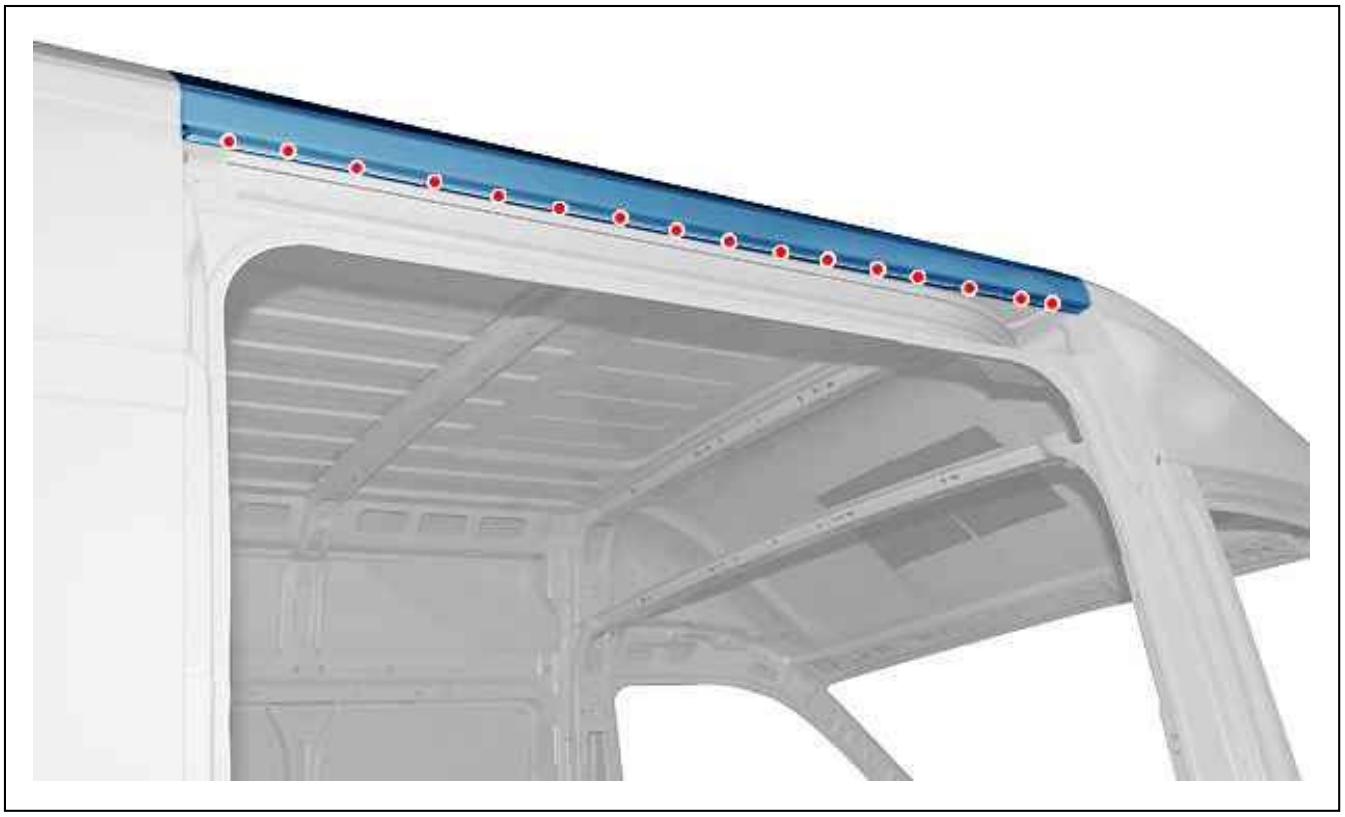

Figure : C4CP20KD

Figure 9.
Weld with plug welds.
Grind the plug welds.

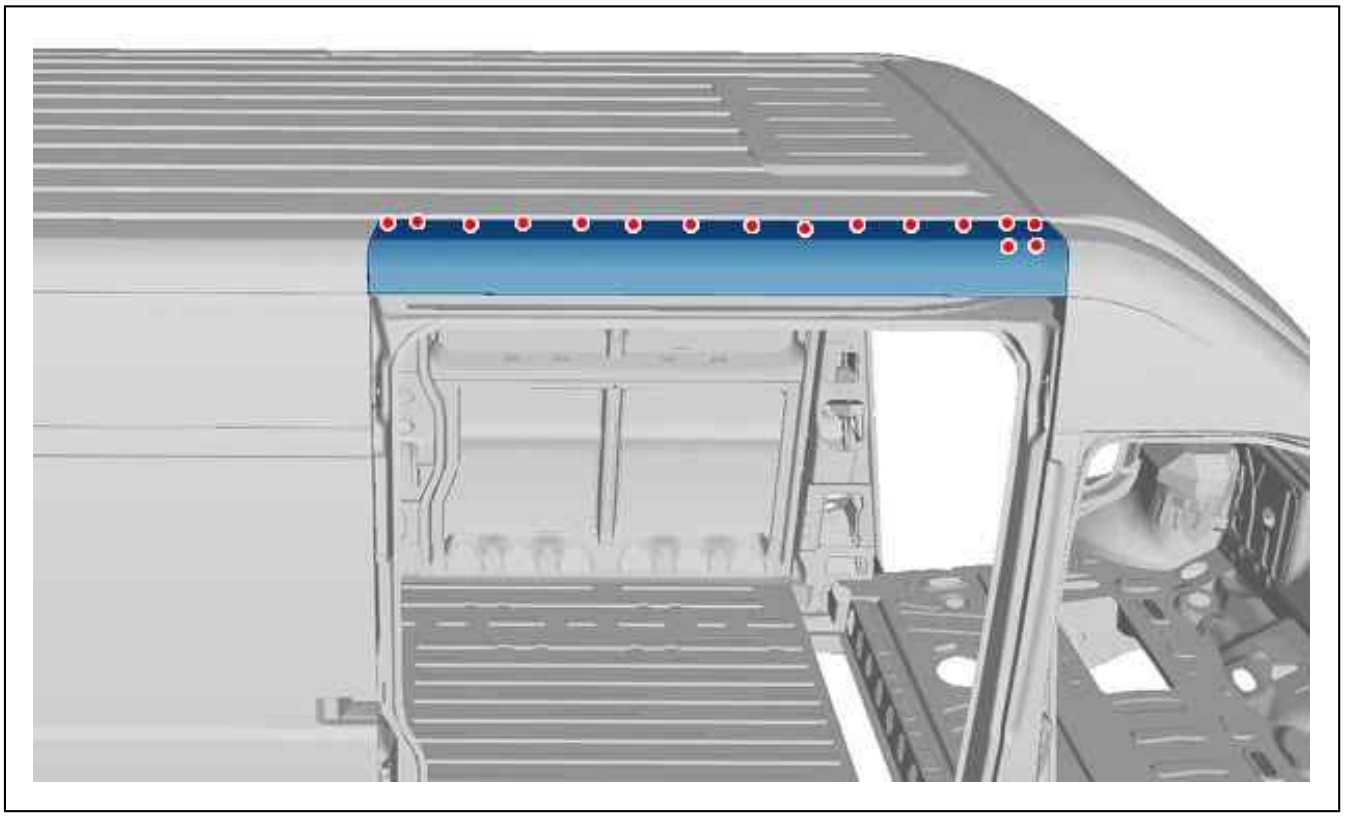

Figure : C4CP20MD

Figure 10.
Weld with plug welds.
Grind the plug welds.

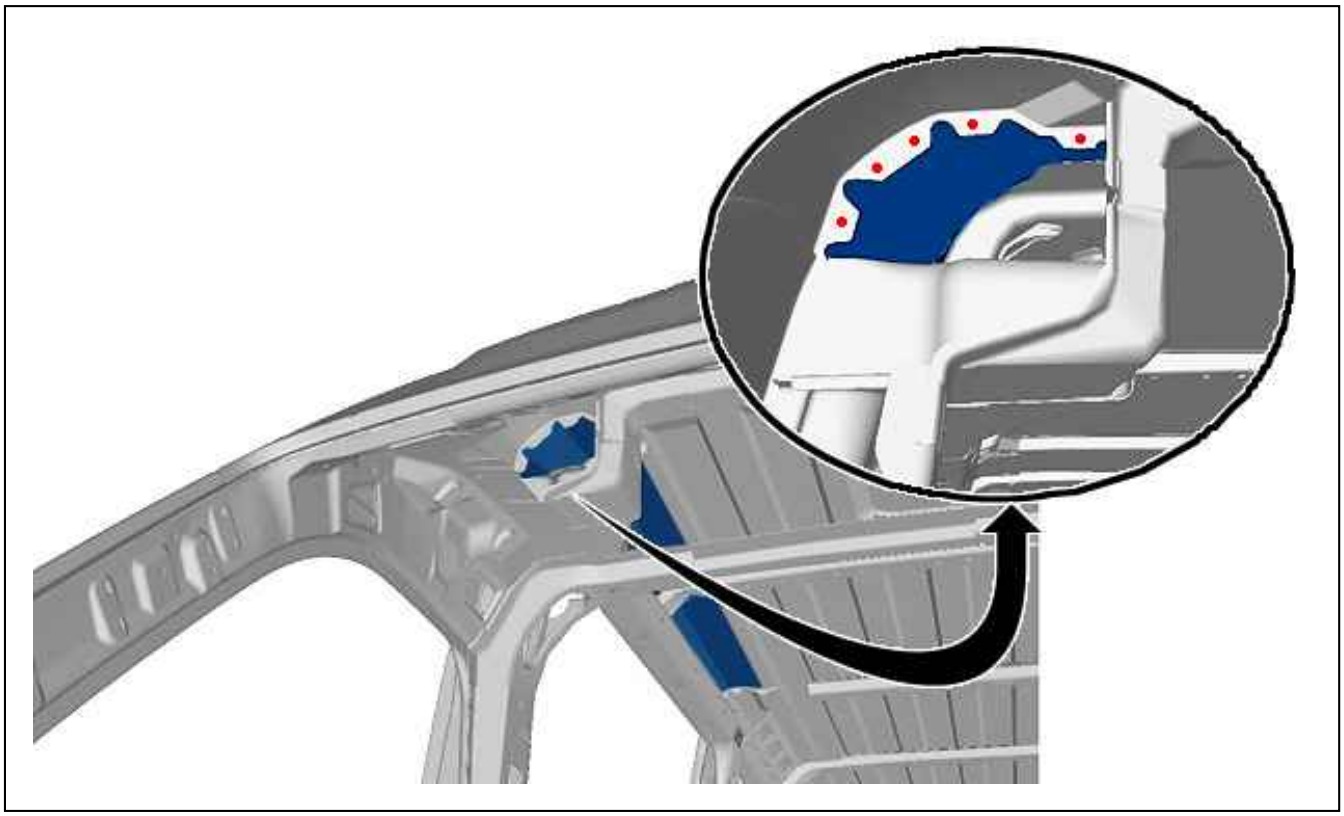

Figure : C4CP20ND

Figure 11.
Weld with plug welds.

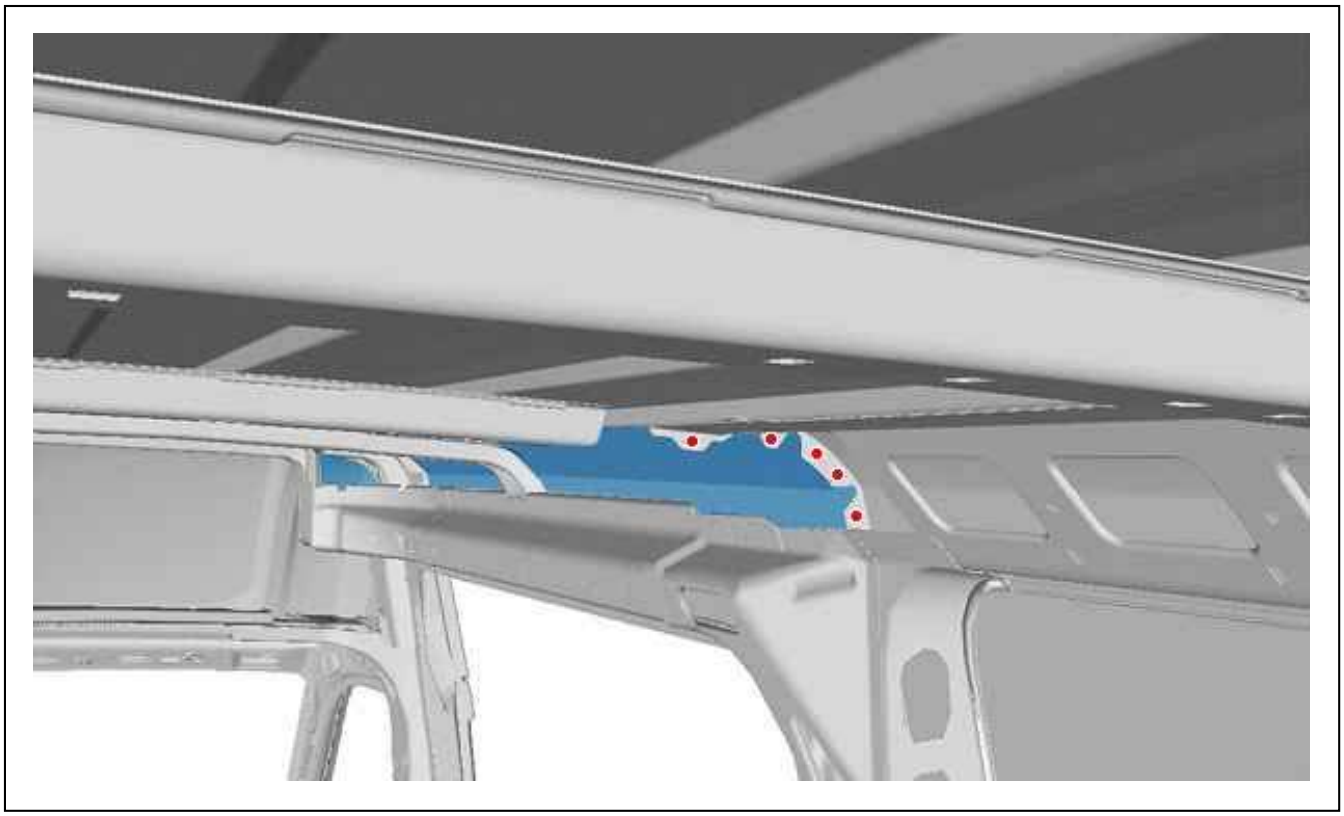

Figure : C4CP20PD

Figure 12.
Weld with plug welds.
Grind the plug welds.

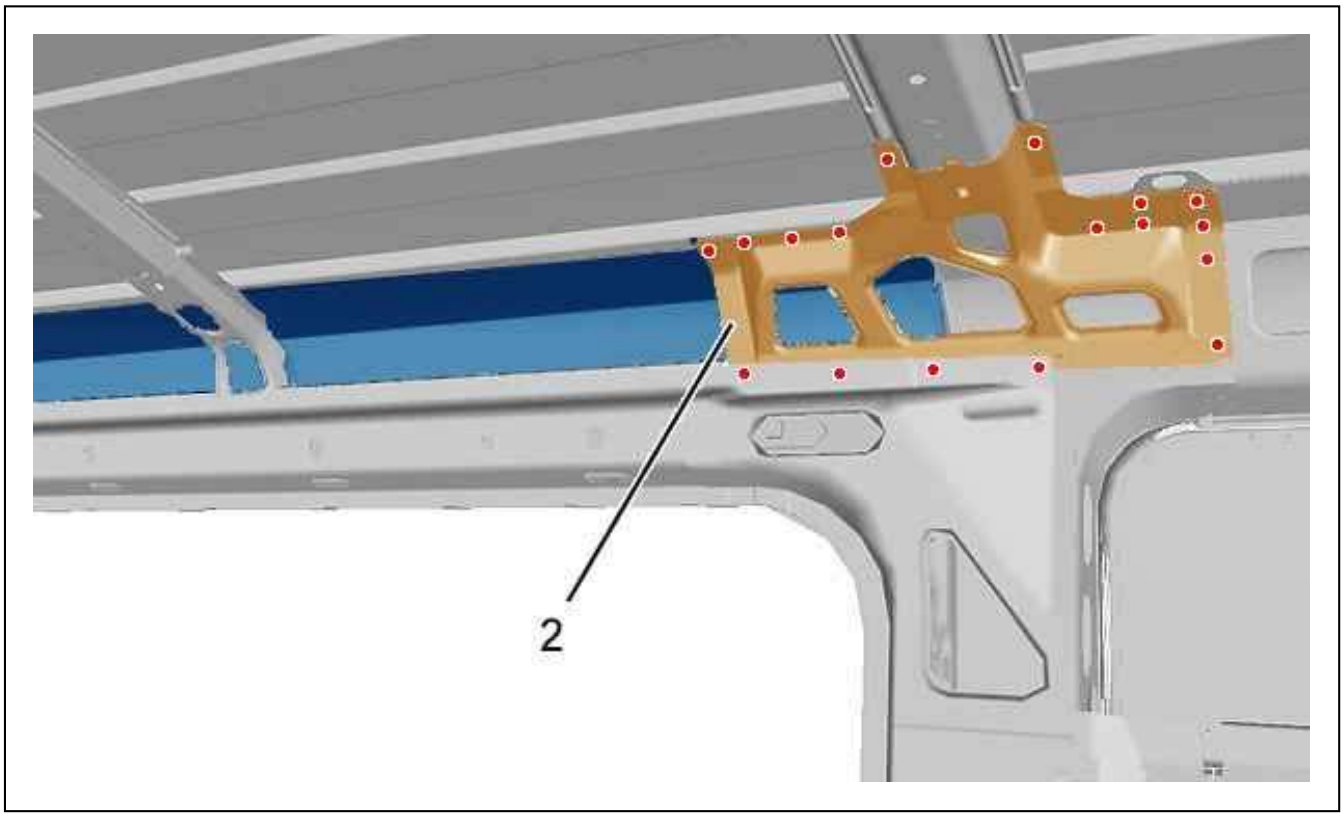

Figure : C4CP20QD

Figure 13.
Refit the roof central bow RH support (2).
Weld with plug welds.
Grind the plug welds.

8. Sealing

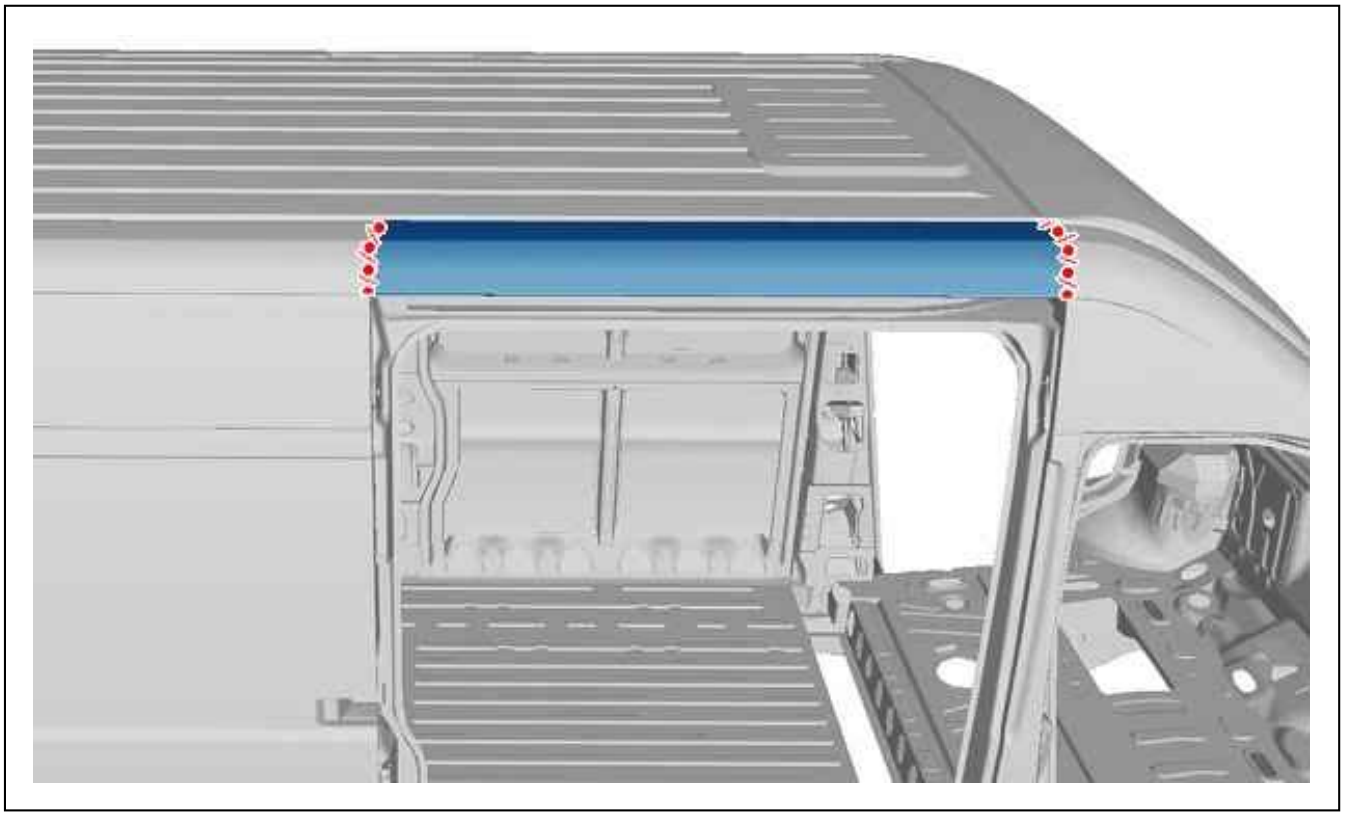

Figure : C4CP20RD

Figure 14.
Apply a phosphate-print layer to the zones laid bare.
Apply a sealing mastic of type " A4" (see the relevant operation).

9. Protection

Paint then spray into the hollow sections, product index C5, in the repair zone (see the relevant operation).

10. Reinitialisation

Reconnect the battery.

ESSENTIAL : Perform the operations to be carried out following reconnection of the battery.

REPLACEMENT : FRONT LH EXTERIOR PILLAR INNER PANEL

ESSENTIAL : All of the stripped surfaces must be protected by means of the approved electrolytic rezincing process (see the relevant operation).

ESSENTIAL : Observe the elementary rules of hygiene and safety (wear a face mask to protect against fumes and vapour - work in a well ventilated space).

1. Additional operations

Disconnect the battery.
Replacement :

- Upper part of the front left exterior pillar (see the relevant operation)
- Lower part of the front left exterior pillar (see the relevant operation)

2. Identification of the replacement parts

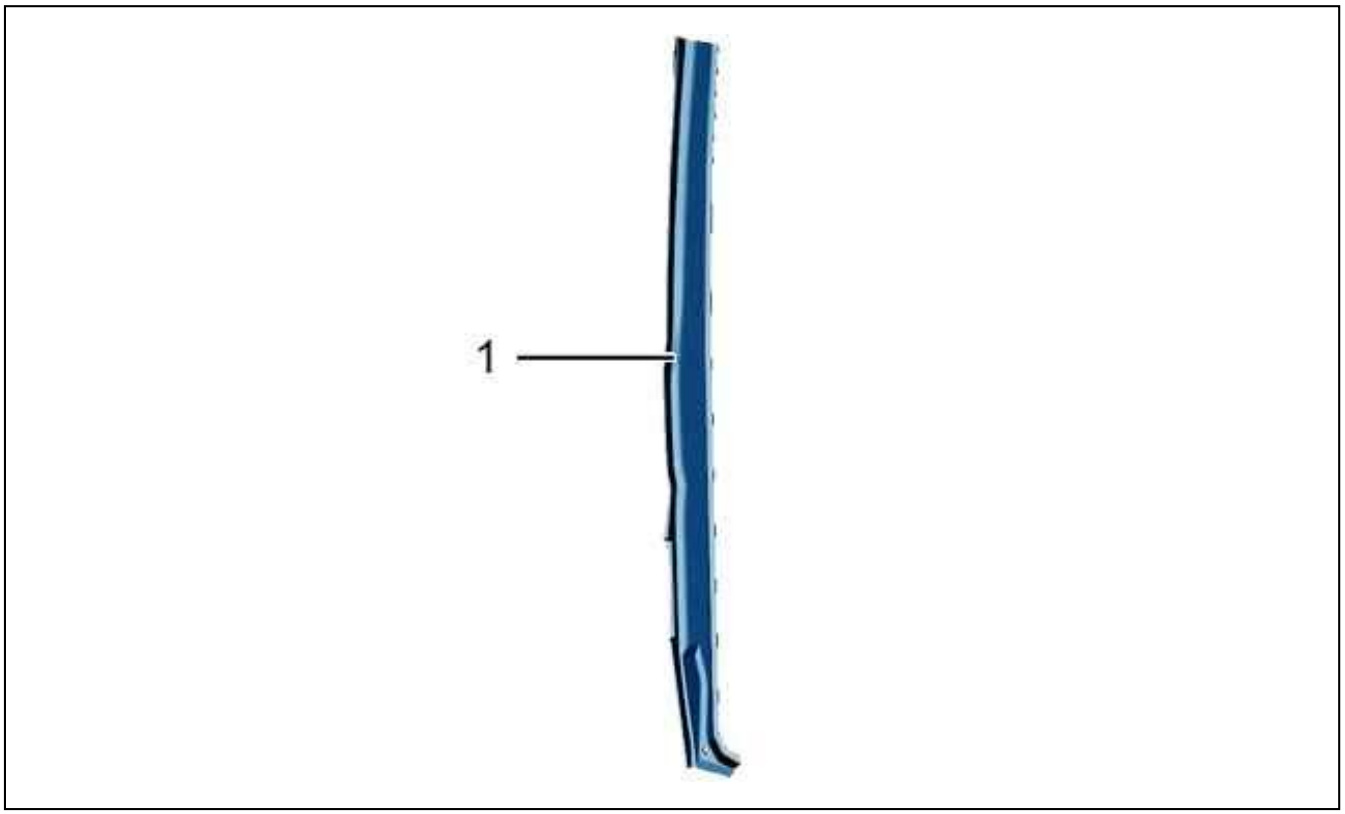

Figure : C4CP20XD

Figure 1.
(1) Front LH exterior pillar inner panel .

3. Cutting out

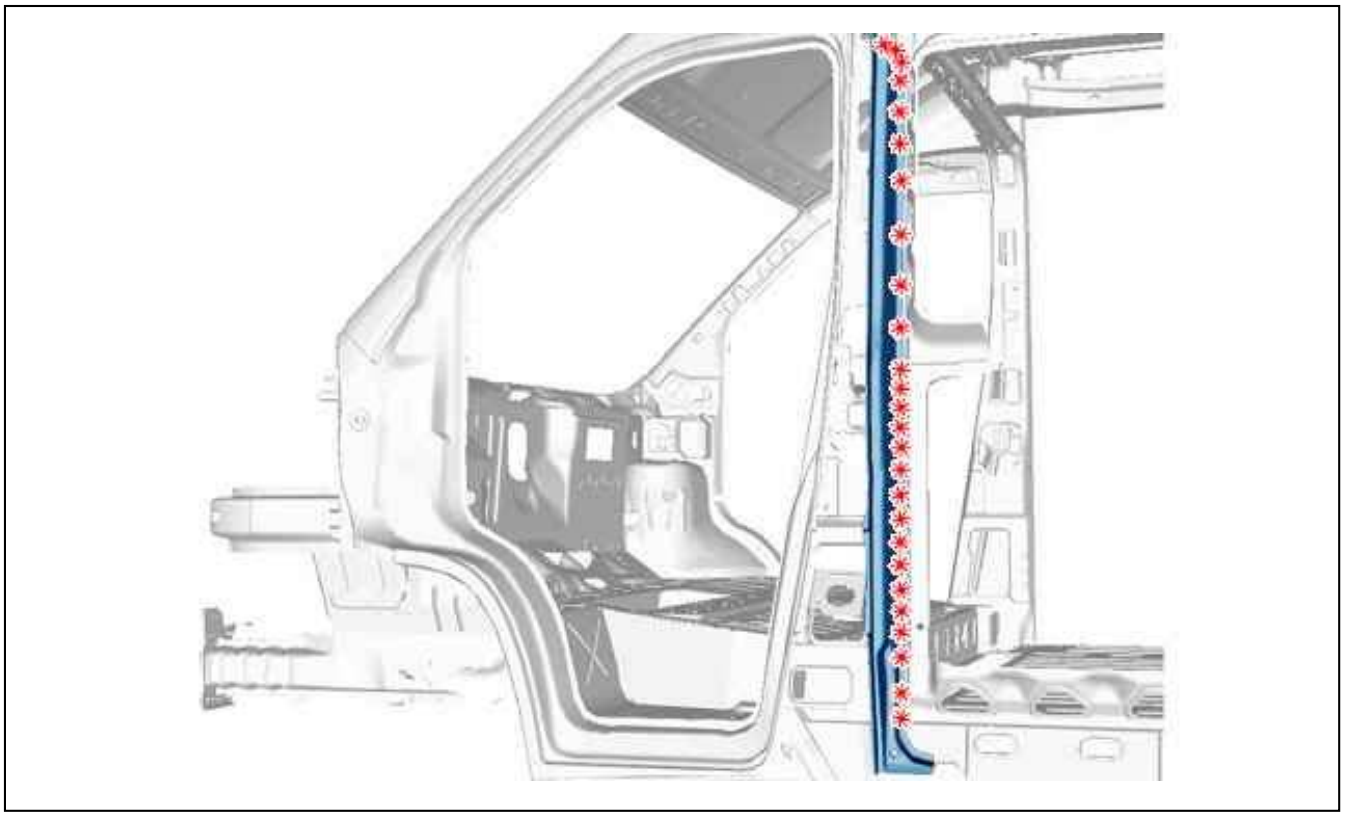

Figure : C4CP20YD

Figure 2.
Cut out the spot welds .
Remove the front LH exterior pillar inner panel .

4. Bodywork cleaning and preparation

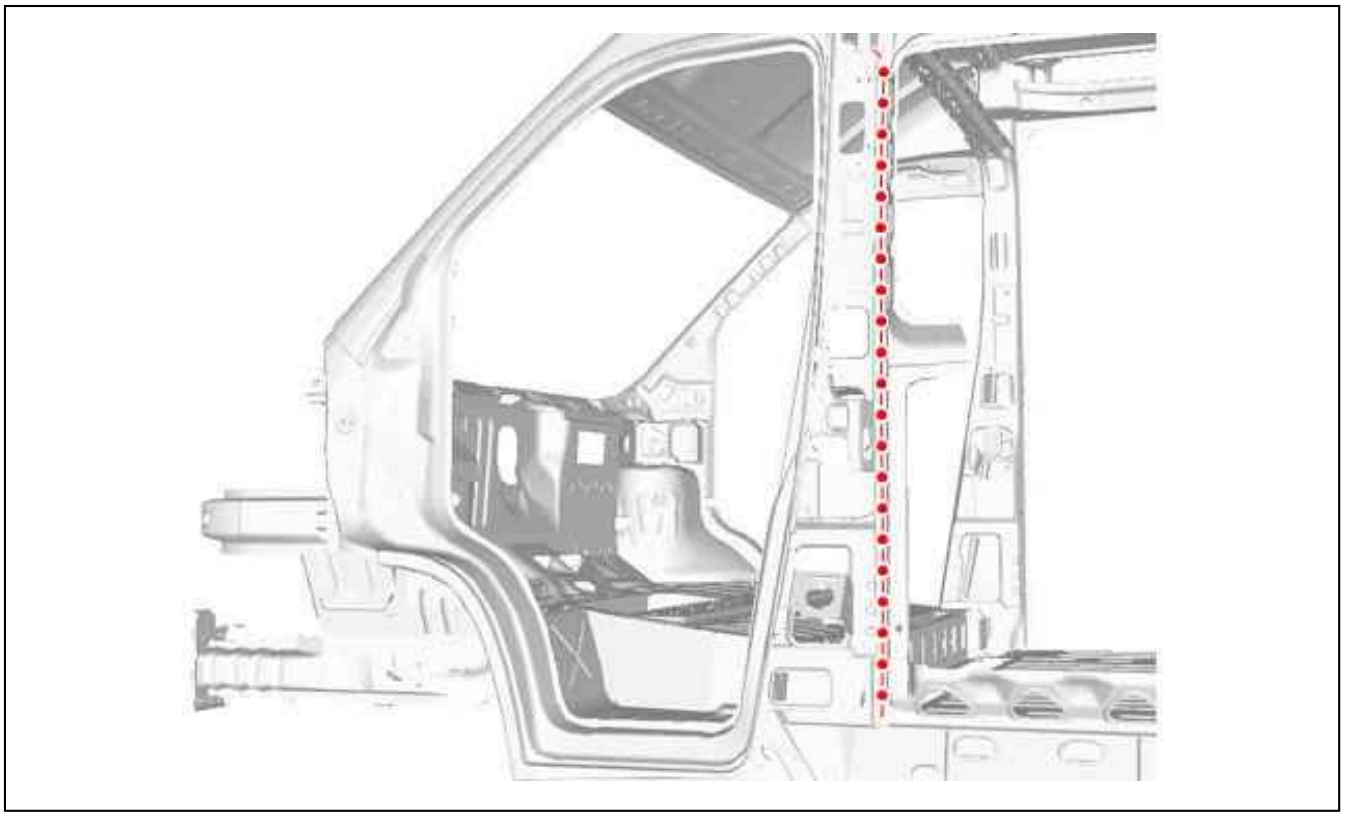

Figure : C4CP20ZD

Figure 3.
Prepare the mating edges .
Align the mating edges and protect them with a weldable primer.

5. Adjustment

Present the component for adjustment.
Check the fits and clearances (see the relevant operation).

6. Welding

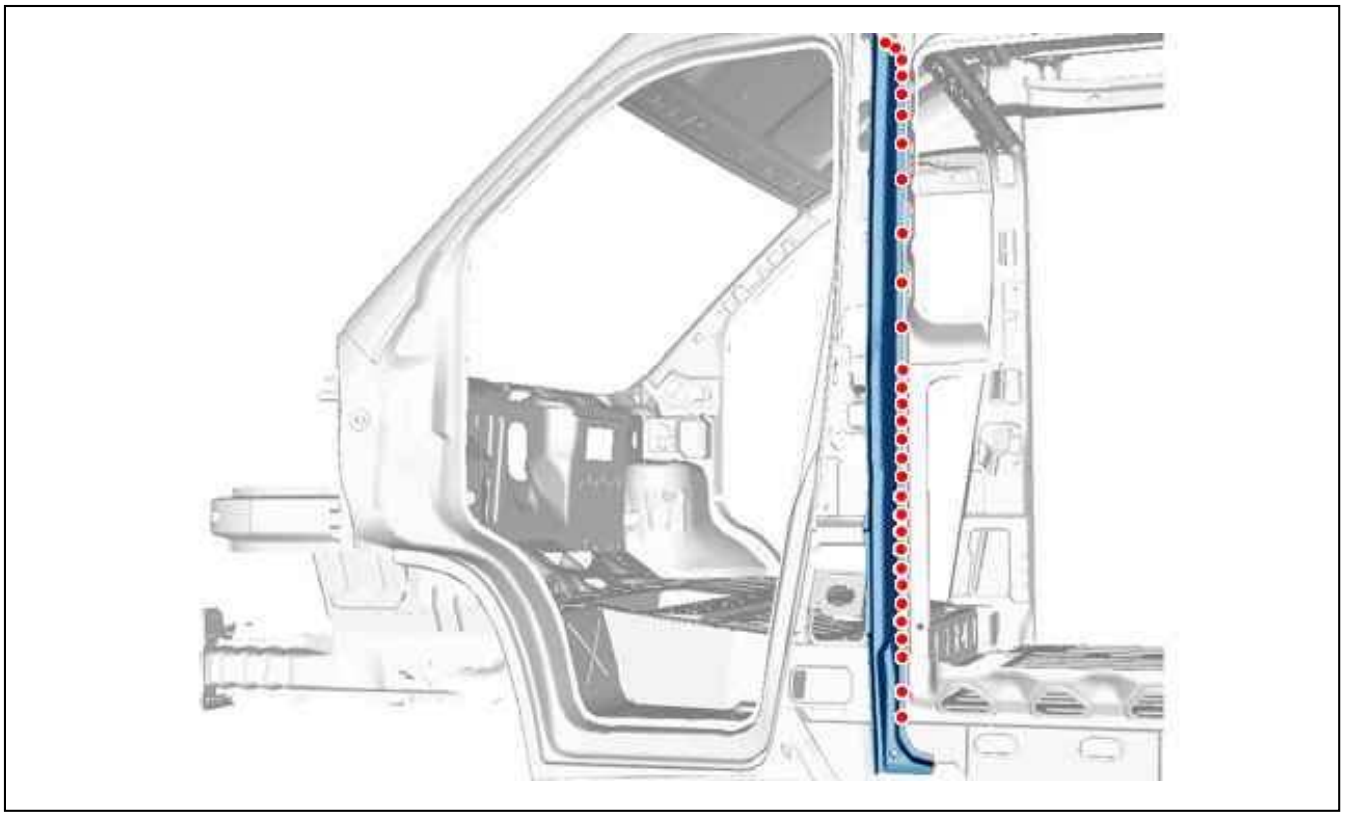

Figure : C4CP210D

Figure 4.
Weld with electric spot welds.

7. Protection

Paint then spray into the hollow sections, product index C5, in the repair zone (see the relevant operation).

8. Reinitialisation

Reconnect the battery.

ESSENTIAL : Perform the operations to be carried out following reconnection of the battery.

REPLACEMENT : CAB DOOR FRAME ASSEMBLY

ESSENTIAL : All of the stripped surfaces must be protected by means of the approved electrolytic rezincing process (see the relevant operation).

ESSENTIAL : Observe the elementary rules of hygiene and safety (wear a face mask to protect against fumes and vapour - work in a well ventilated space).

1. Additional operations

Disconnect the battery.
Replacement :

- Lower part of the front left exterior pillar (see the relevant operation)
- Upper part of the front left exterior pillar (see the relevant operation)
- Door frame upper closing panel (see the relevant operation)

Remove - refit :

- The front wing
- The front door
- The windscreen
- The fascia
- The front door aperture seal
- The gutter seal

Detrim-retrim :

- The partial front floor
- The front pillar

Release the wiring harnesses.

2. Identification of replacement parts

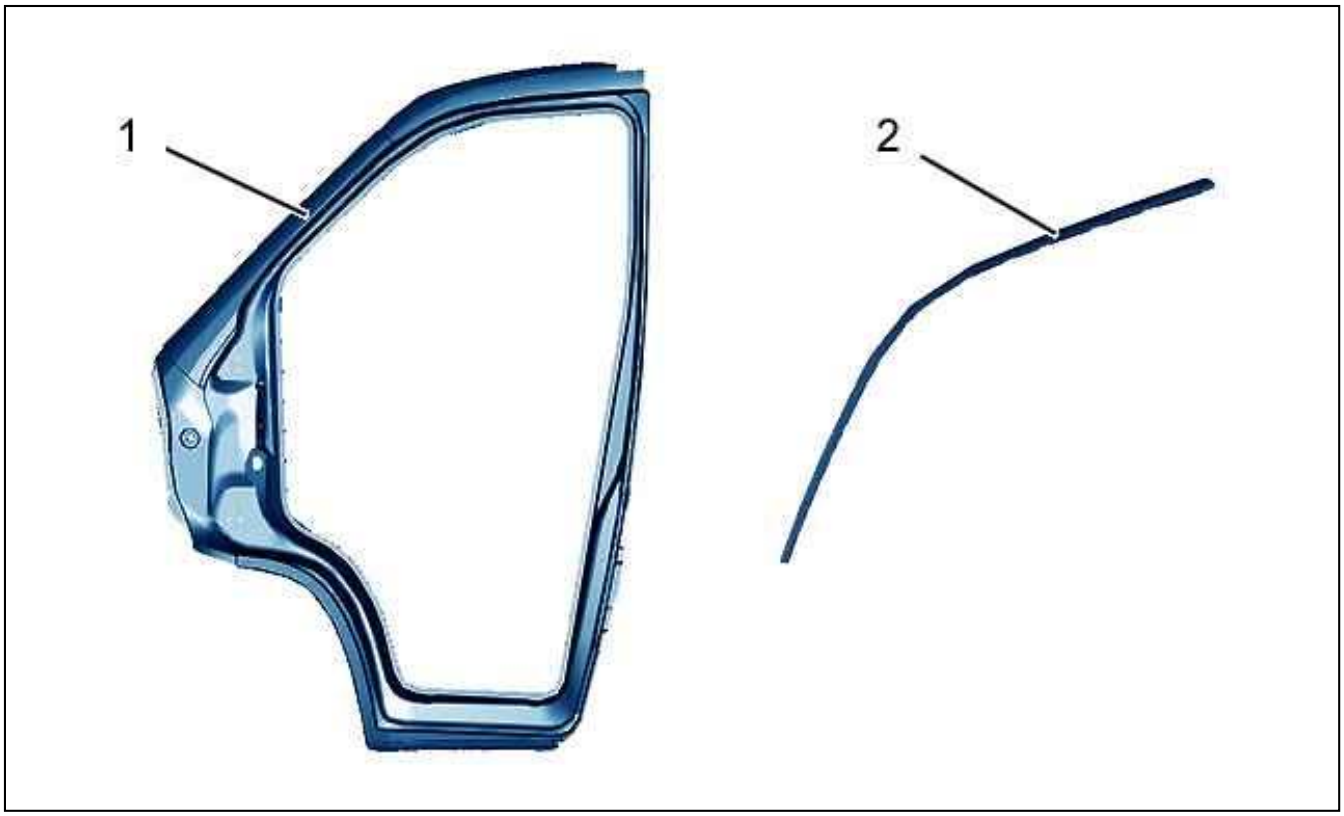

Figure : C4CP211D

Figure 1.
(1) Front cab door frame .
(2) Gutter seal support .

3. Preparation of the new part



Figure : C4CP212D

Figure 2.
Mark then drill to Ø 6 mm for later plug welding (11 holes).
Prepare the mating edges .



Figure : C4CP213D

Figure 3.
Mark then drill to Ø 6 mm for later plug welding (7 holes).
Prepare the mating edges .



Figure : C4CP214D

Figure 4.
Mark then drill to Ø 6 mm for later plug welding (1 hole).
Prepare the mating edges .

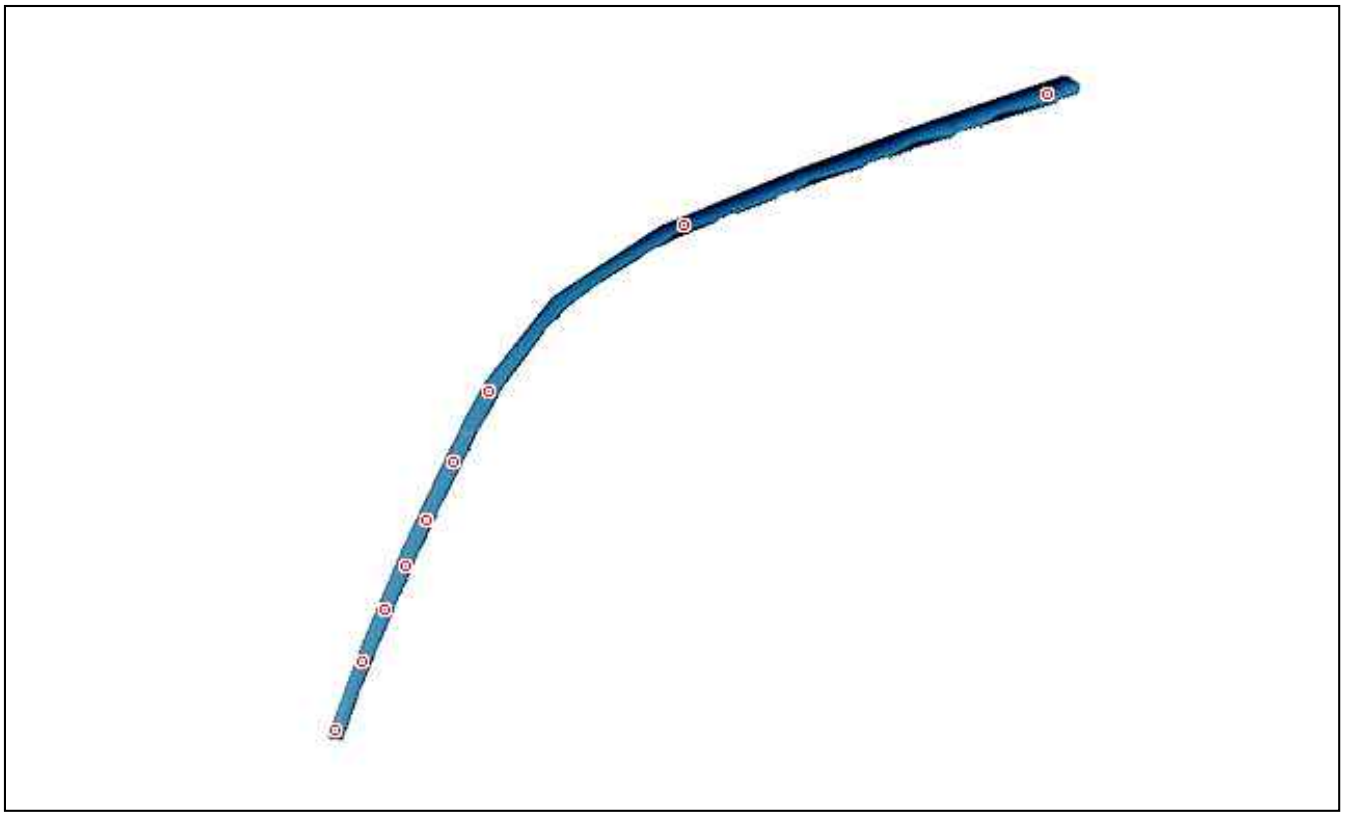

Figure : C4CP215D

Figure 5.
Mark then drill to Ø 6 mm for later plug welding (10 holes).
Prepare the mating edges .

4. Cutting out

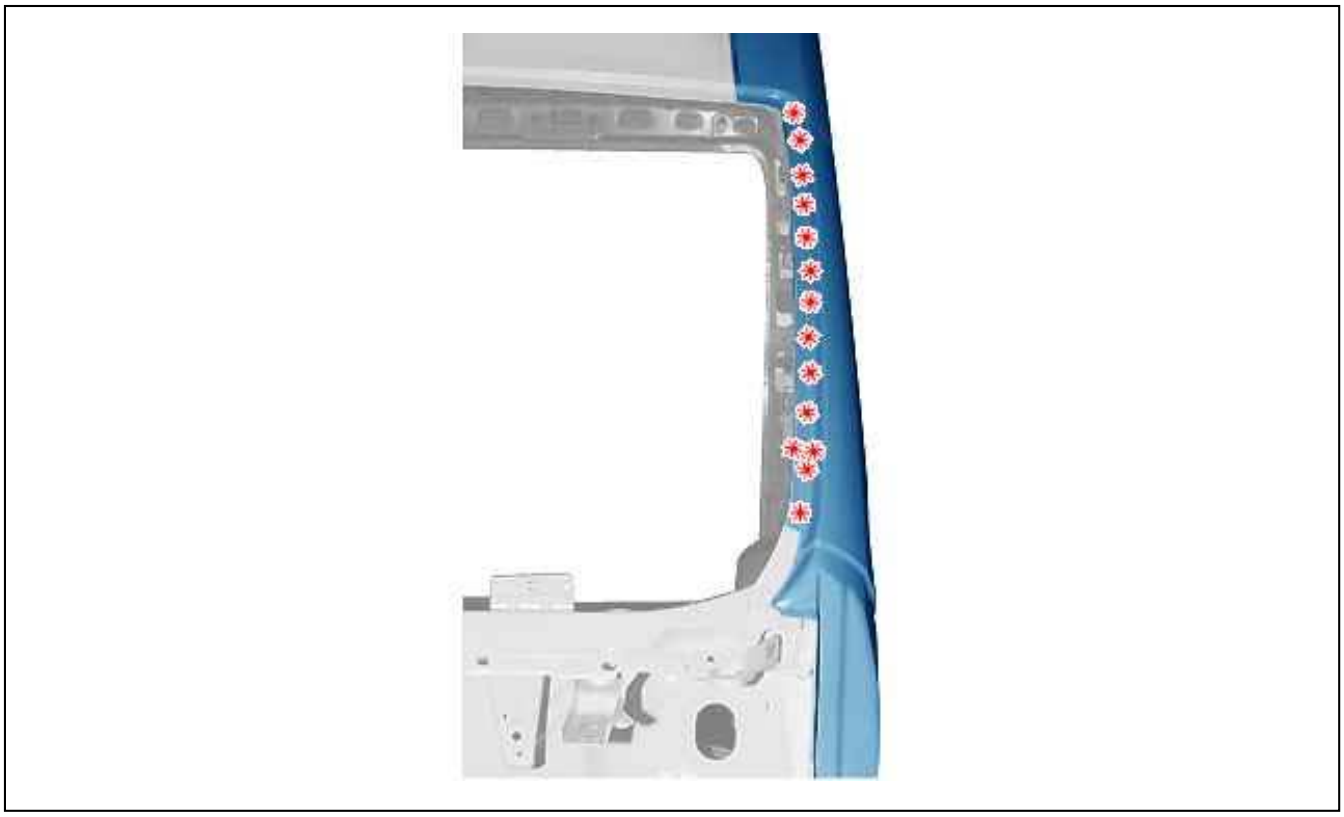

Figure : C4CP216D

Figure 6.
Cut out the spot welds .

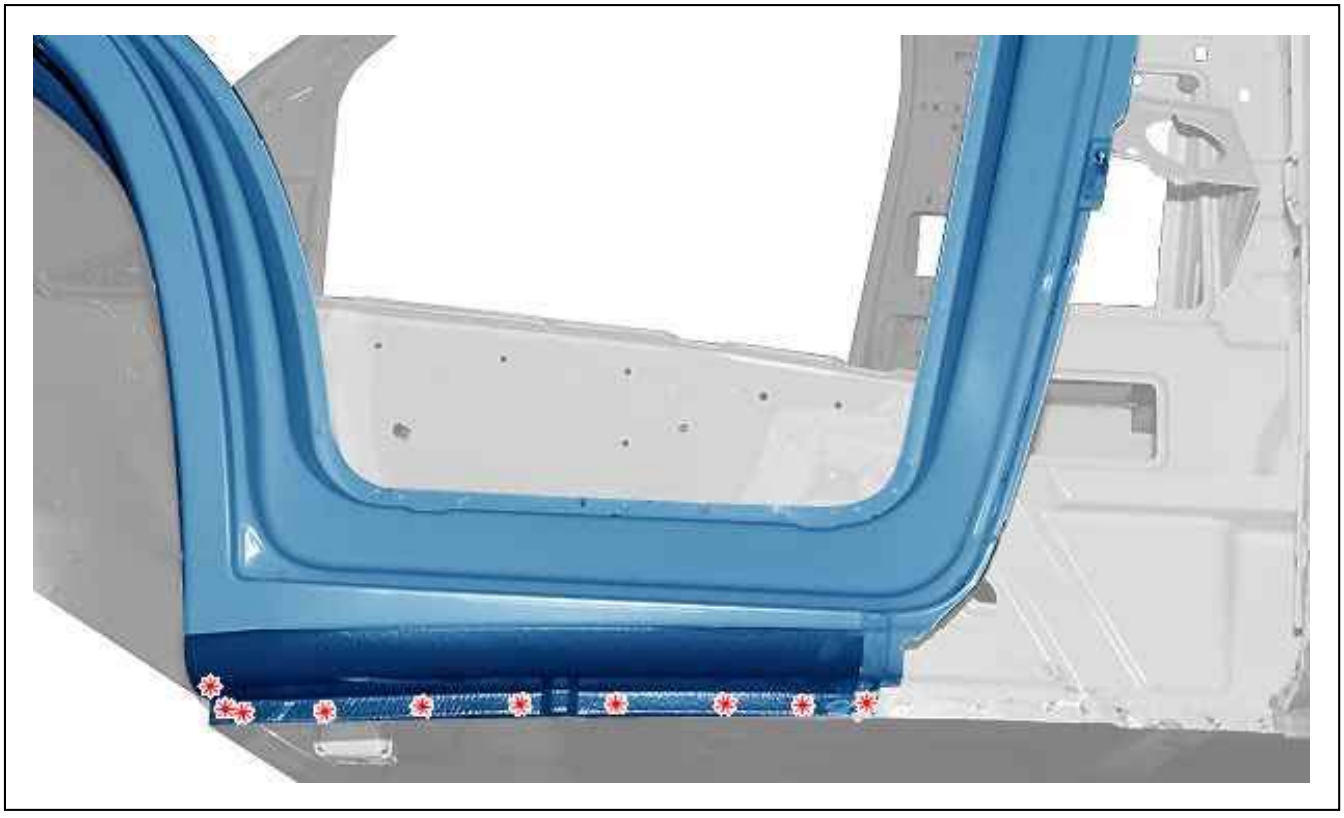

Figure : C4CP217D

Figure 7.

Cut out the spot welds .

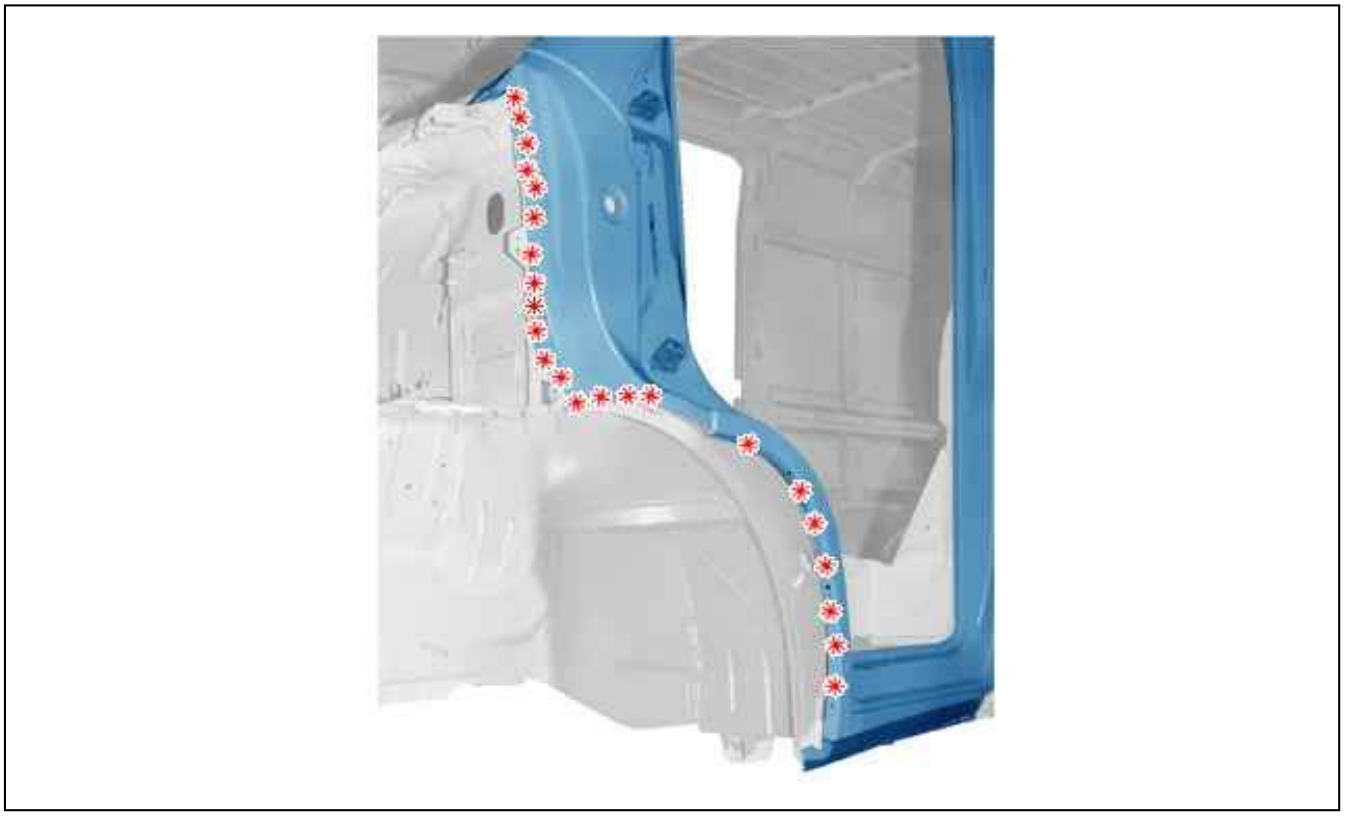

Figure : C4CP218D

Figure 8.
Cut out the spot welds .

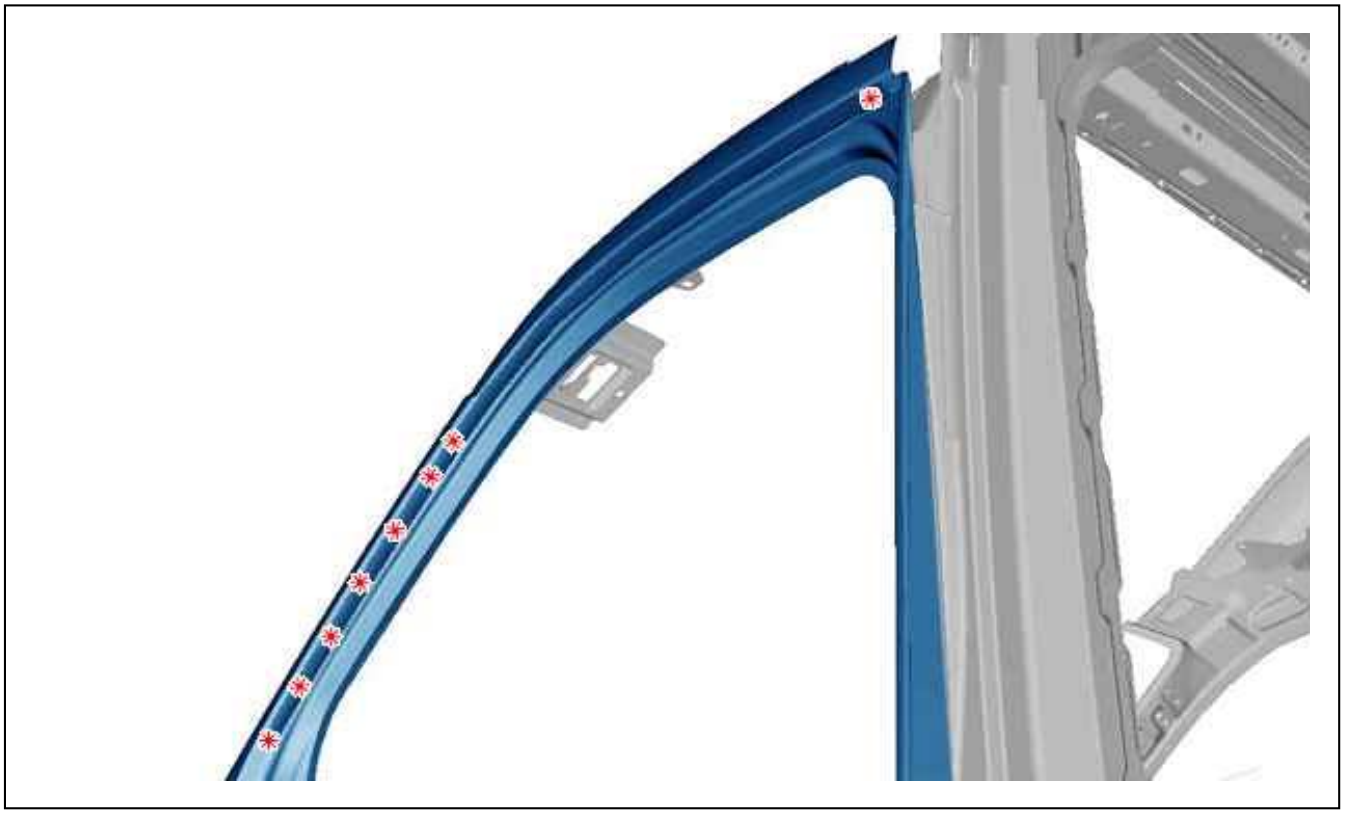

Figure : C4CP219D

Figure 9.
Cut out the spot welds .

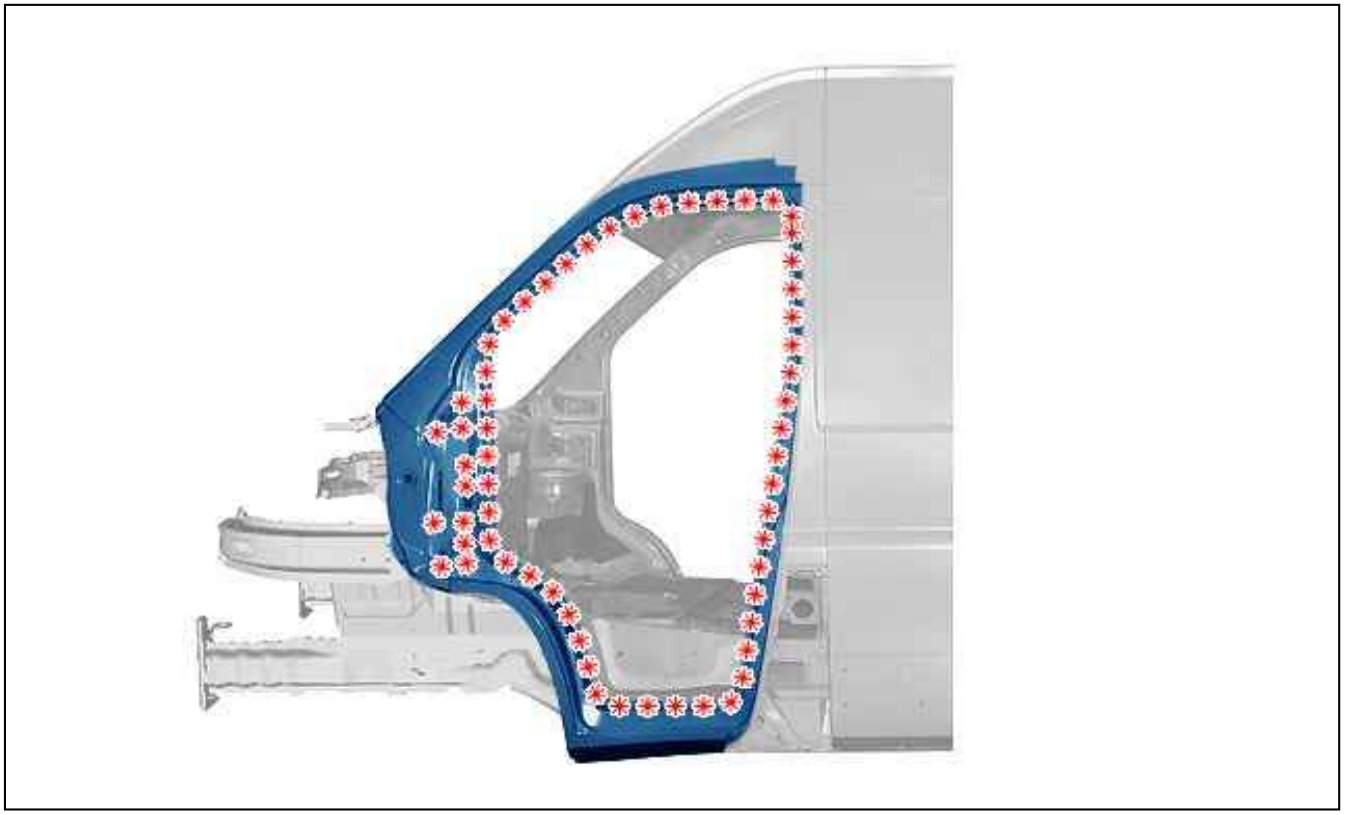

Figure : C4CP21AD

Figure 10.
Cut out the spot welds .
Remove the front cab door frame .

5. Bodywork cleaning and preparation

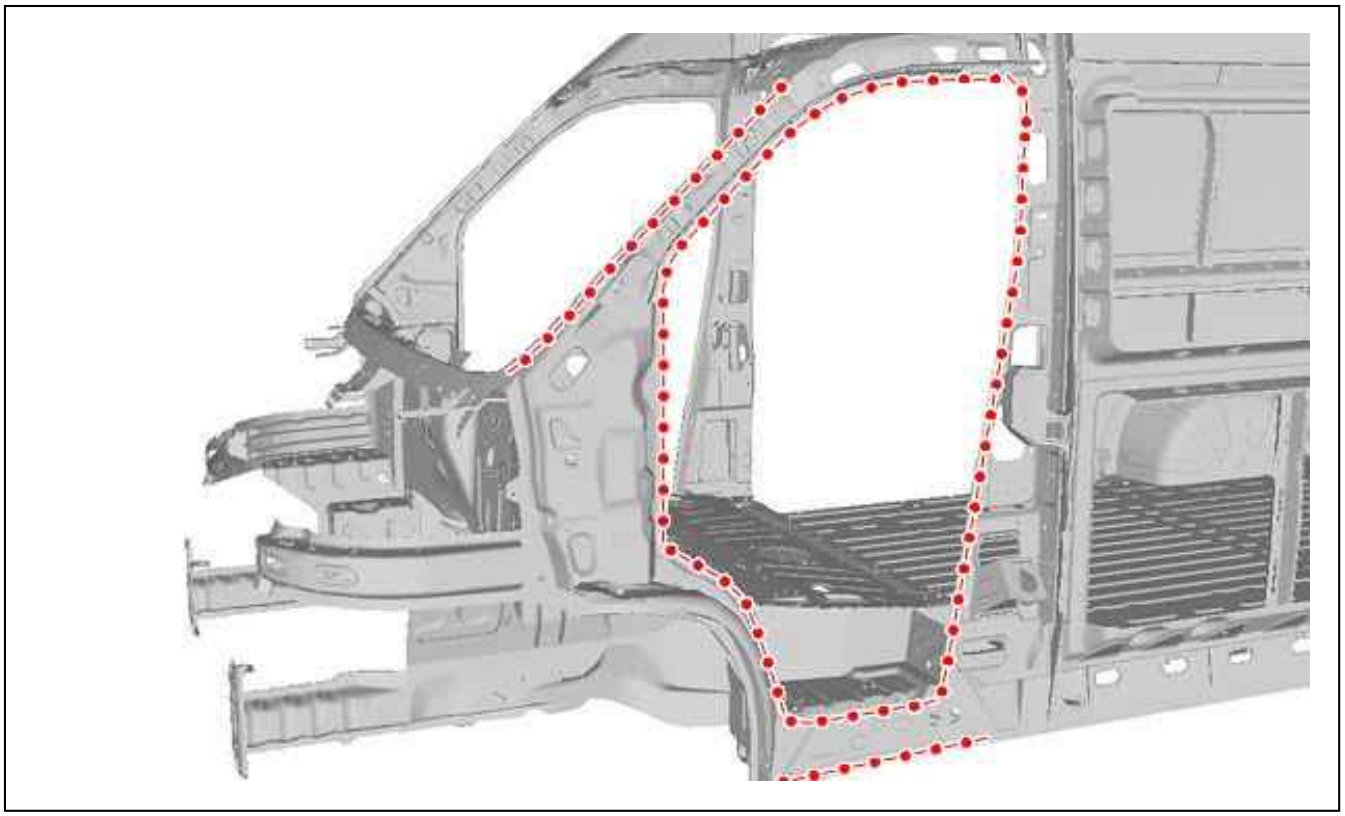

Figure : C4CP21BD

Figure 11.
Align then prepare the mating edges.

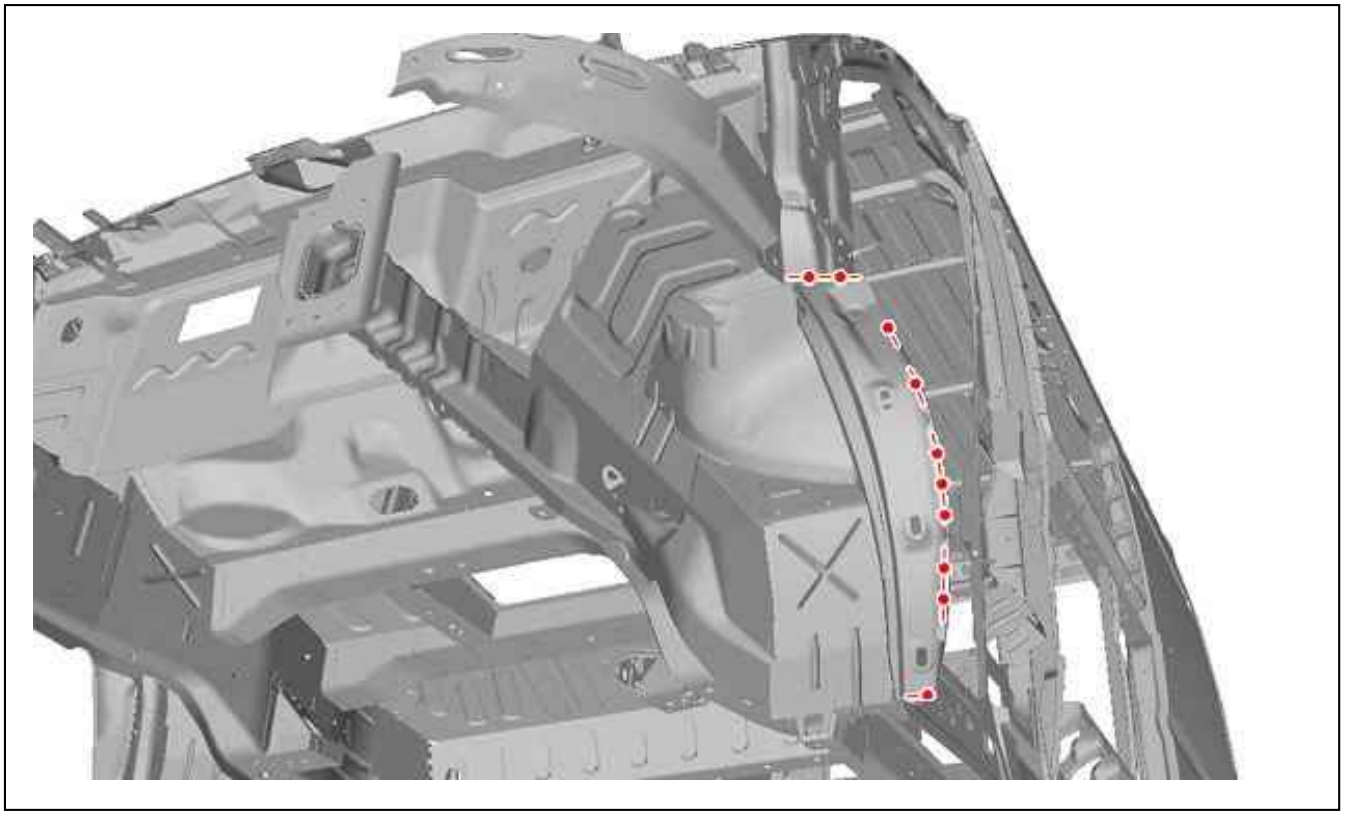

Figure : C4CP21CD

Figure 12.

Prepare the mating edges .
Align the mating edges and protect them with a weldable primer.

6. Adjustment

Present the elements, allowing for adjustment.
Check the fits and clearances (see the relevant operation).

7. Welding

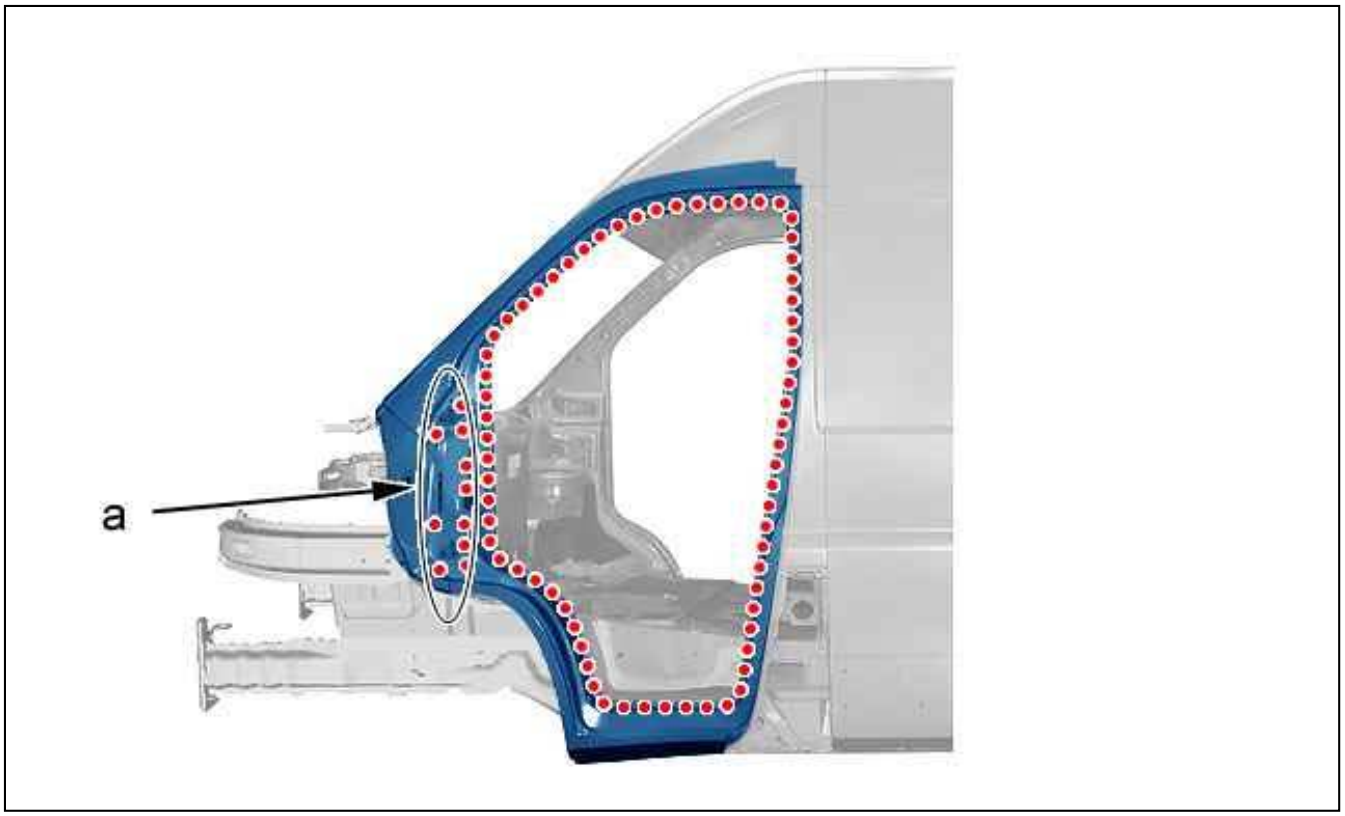

Figure : C4CP21DD

Figure 13.
Weld with plug welds (at "a").
Grind the plug welds.
Weld with electric spot welds.

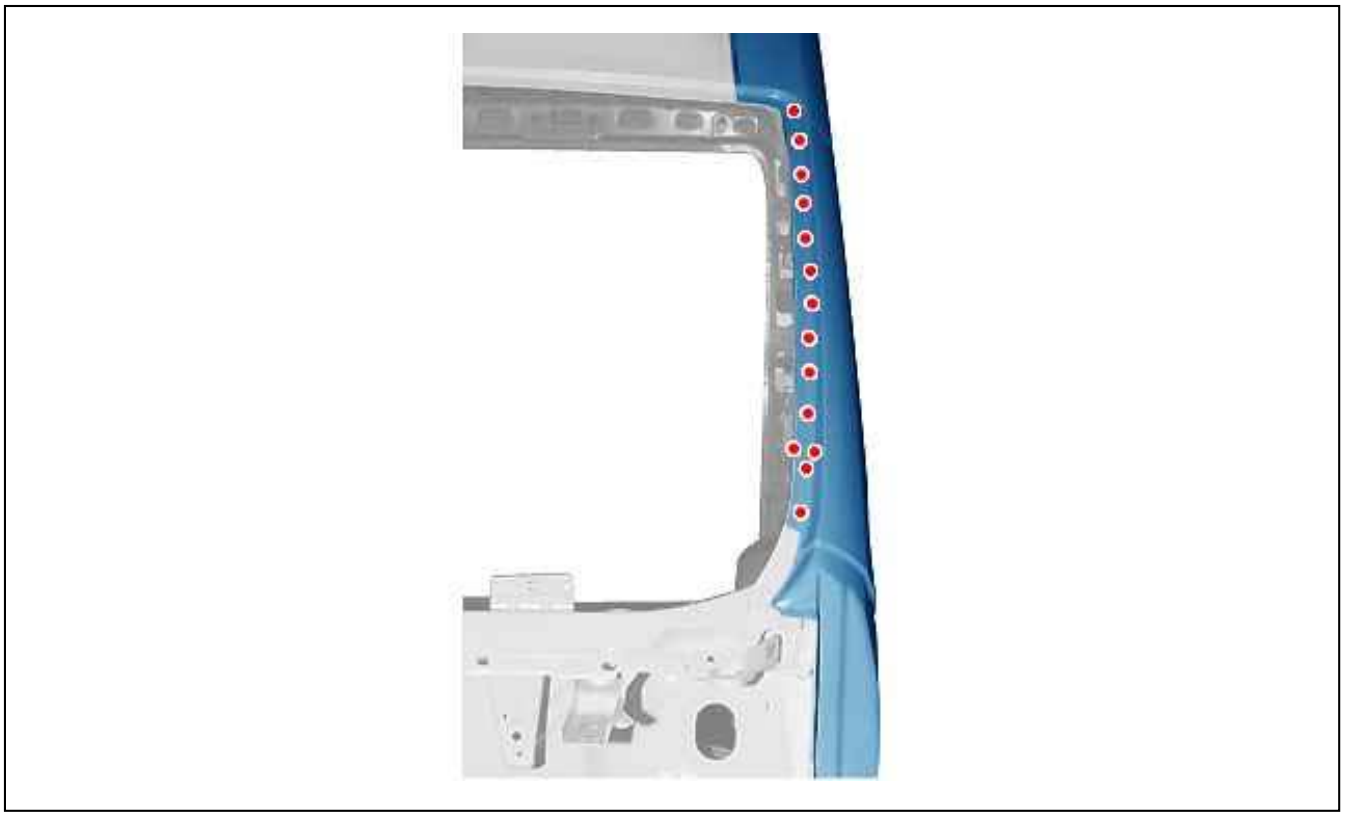

Figure : C4CP21ED

Figure 14.
Weld with electric spot welds.

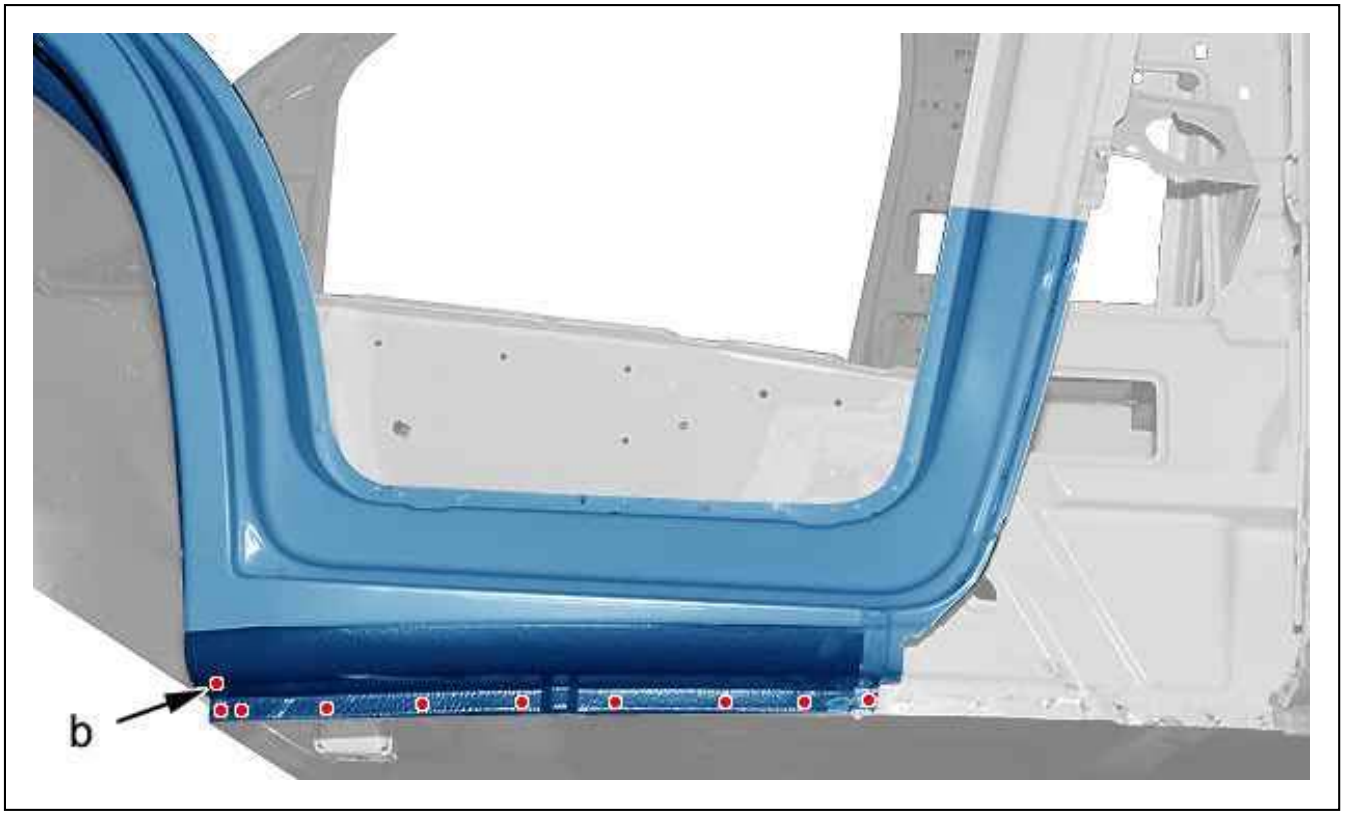

Figure : C4CP21FD

Figure 15.

Plug weld (at "b").
Grind the plug welds.
Weld with electric spot welds.

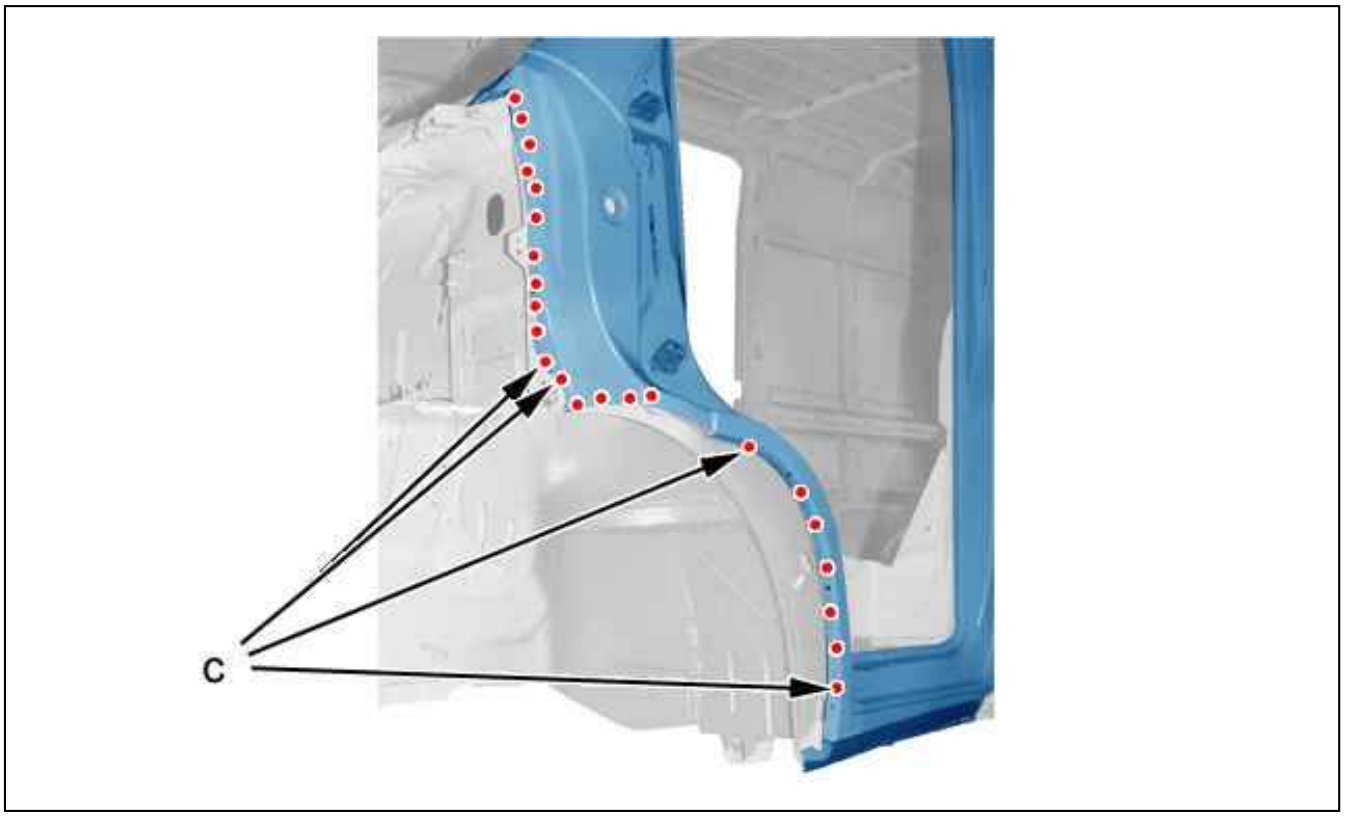

Figure : C4CP21GD

Figure 16.
Weld with plug welds (at "c").
Grind the plug welds.
Weld with electric spot welds.

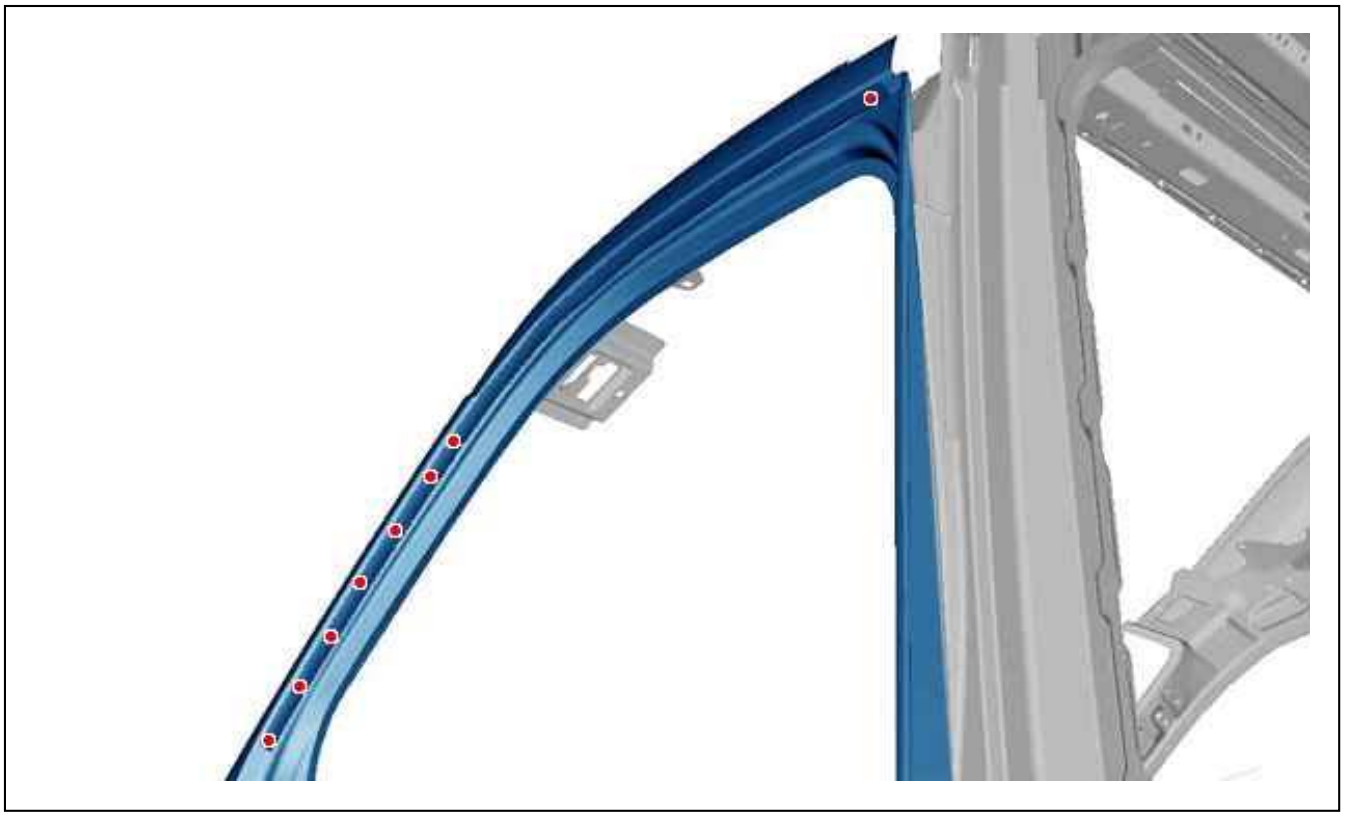

Figure : C4CP21HD

Figure 17.
Weld with plug welds.
Grind the plug welds.

8. Sealing

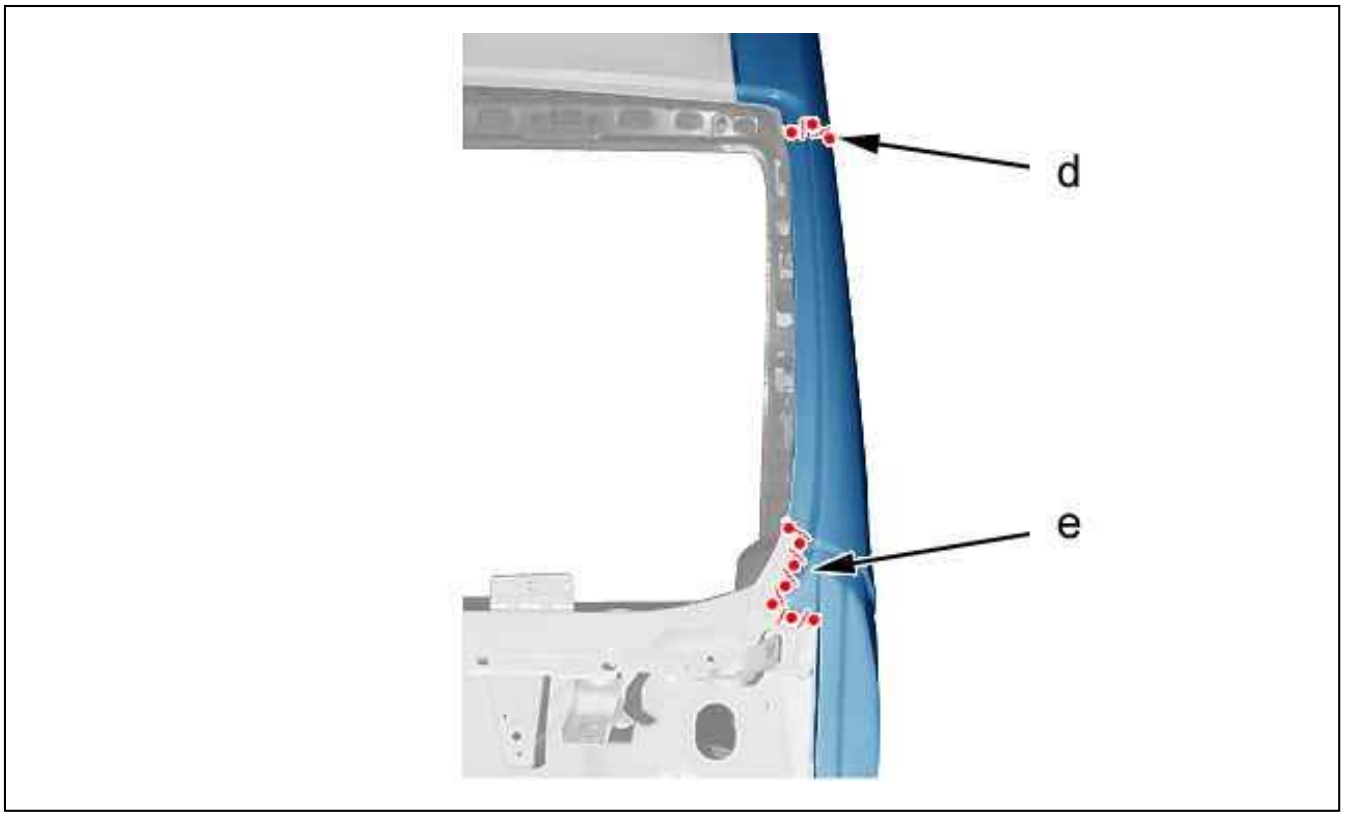

Figure : C4AP1SPD

Figure 18.
Apply a phosphate-print layer to the zones laid bare.
Apply a sealing mastic of type " A1" (at "e") (see the relevant operation).
Apply a sealing mastic of type " A4" (at "d") (see the relevant operation).



Figure : C4CP21JD

Figure 19.
Apply a phosphate-print layer to the zones laid bare.
Apply a sealing mastic of type " A4" (see the relevant operation).

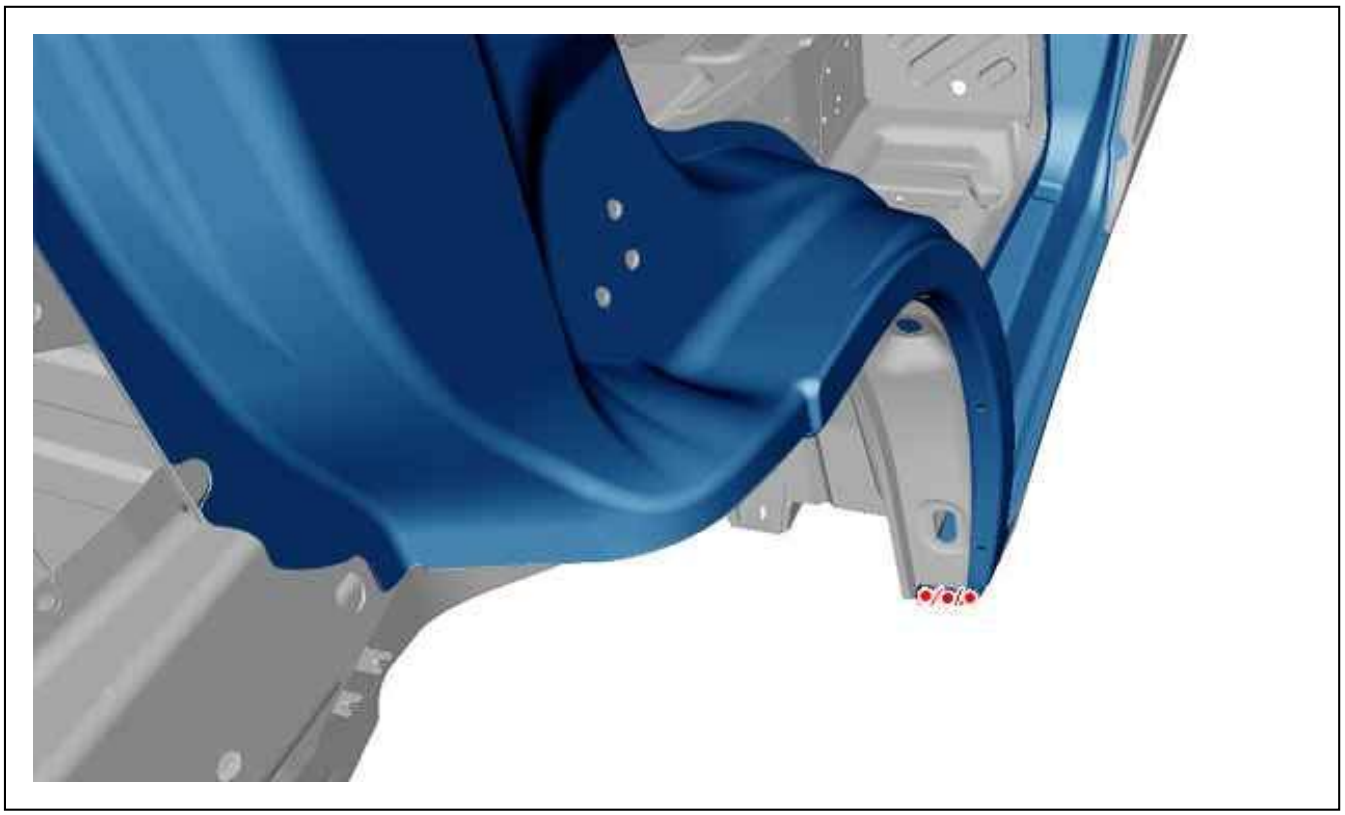

Figure : C4CP21KD

Figure 20.
Apply a phosphate-print layer to the zones laid bare.
Apply a sealing mastic of type " A4" (see the relevant operation).

9. Protection

Paint then spray into the hollow sections, product index C5, in the repair zone (see the relevant operation).
Apply an anti-chip layer (see the relevant operation).

10. Reinitialisation

Reconnect the battery.

ESSENTIAL : Perform the operations to be carried out following reconnection of the battery.

REPLACEMENT : PARTIAL REAR RH SIDE PANEL

ESSENTIAL : All of the stripped surfaces must be protected by means of the approved electrolytic rezincing process (See the corresponding operation).

ESSENTIAL : Observe the elementary rules of hygiene and safety (wear a face mask to protect against fumes and vapour - work in a well ventilated space).

1. Additional operations

Disconnect the battery.
Replace the sliding side door rail (See the corresponding operation).
Removing - refitting :

- Rear right door
- The side sliding door

Release the wiring harnesses.

2. Identification of the replacement parts

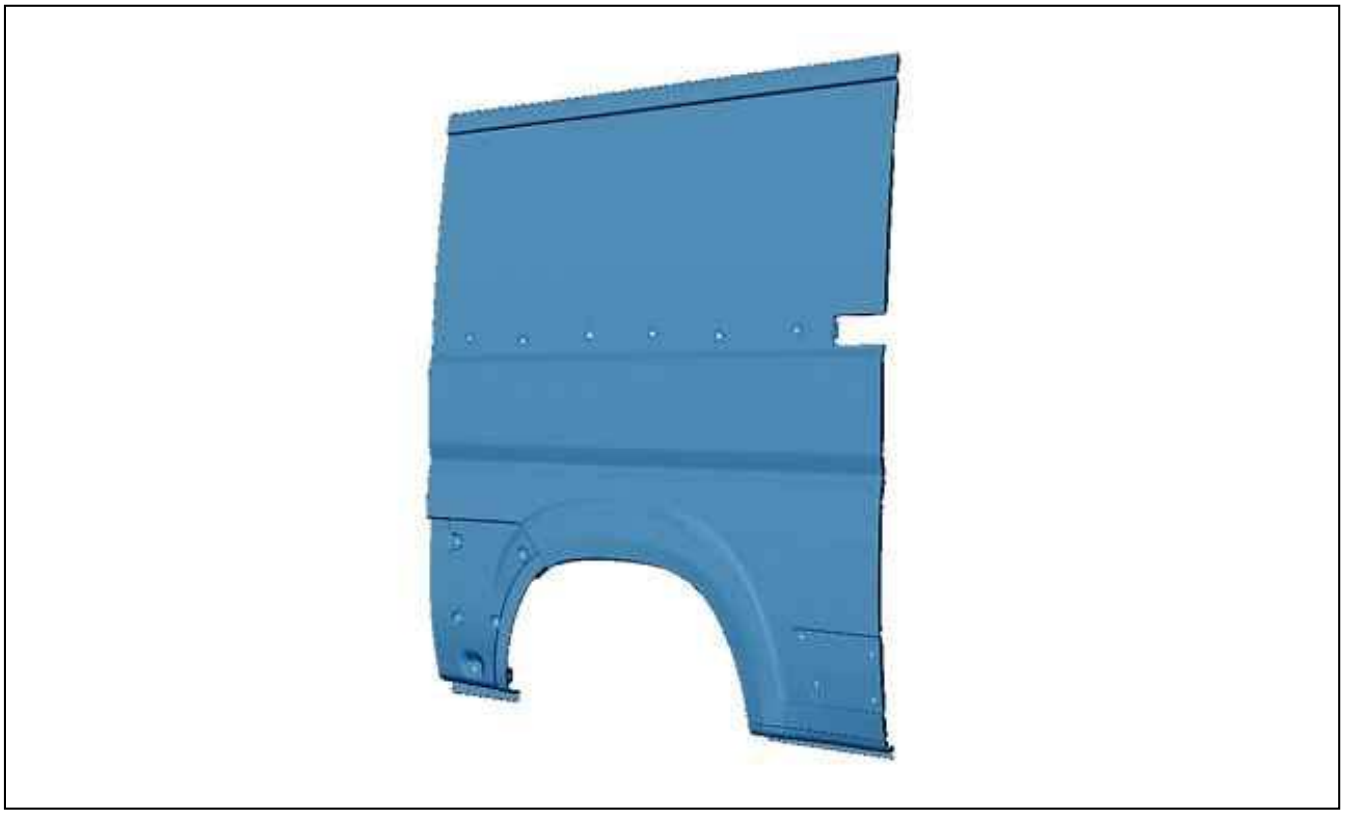

Figure : C4CP21LD

Figure 1.
Rear RH side panel .

3. Preparation of the new part

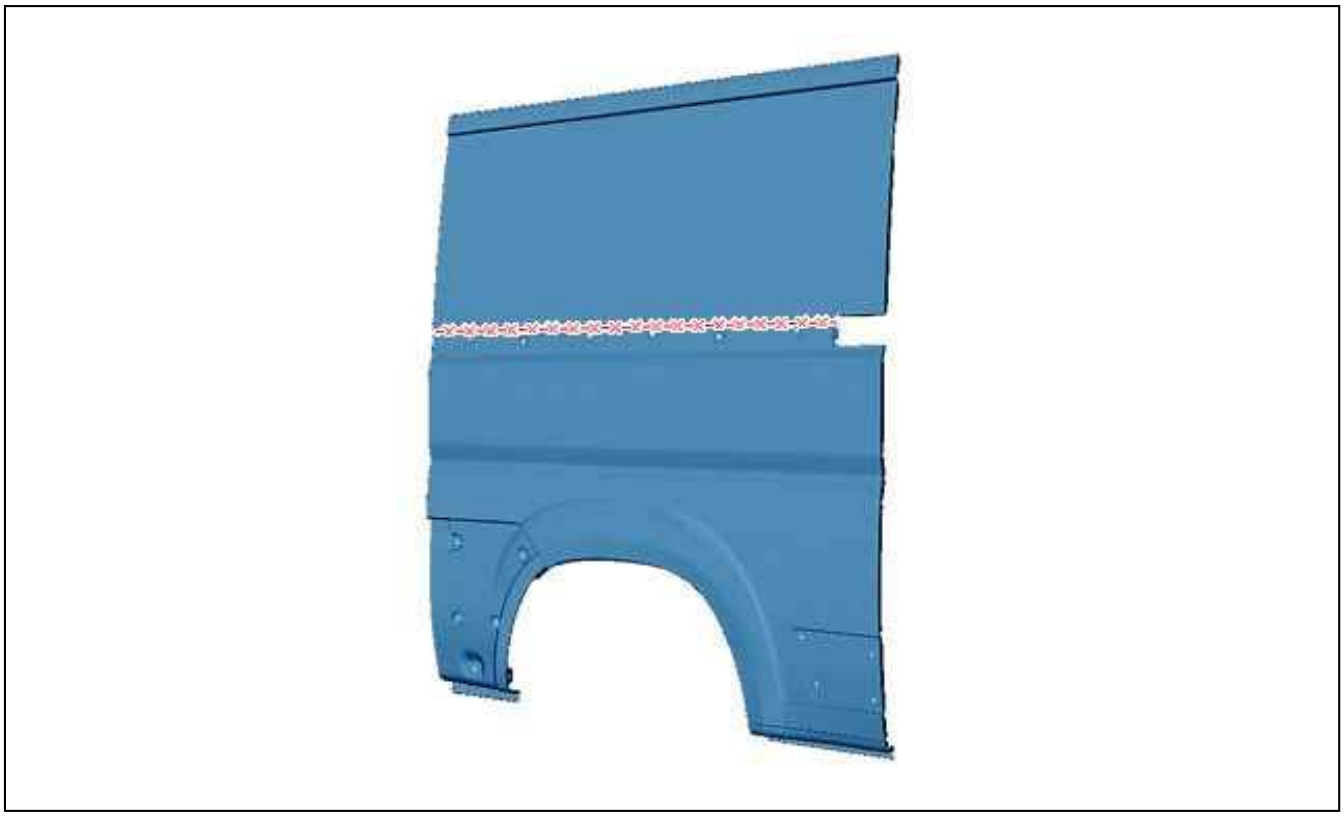

Figure : C4CP21MD

Figure 2.
Mark then cut.
Prepare the mating edges .



Figure : C4CP21ND

Figure 3.
Mark then drill to Ø 6 mm for later plug welding (18 holes).
Prepare the mating edges .



Figure : C4CP21PD

Figure 4.
Mark then drill to Ø 6 mm for later plug welding (21 holes).
Prepare the mating edges .

4. Cutting out

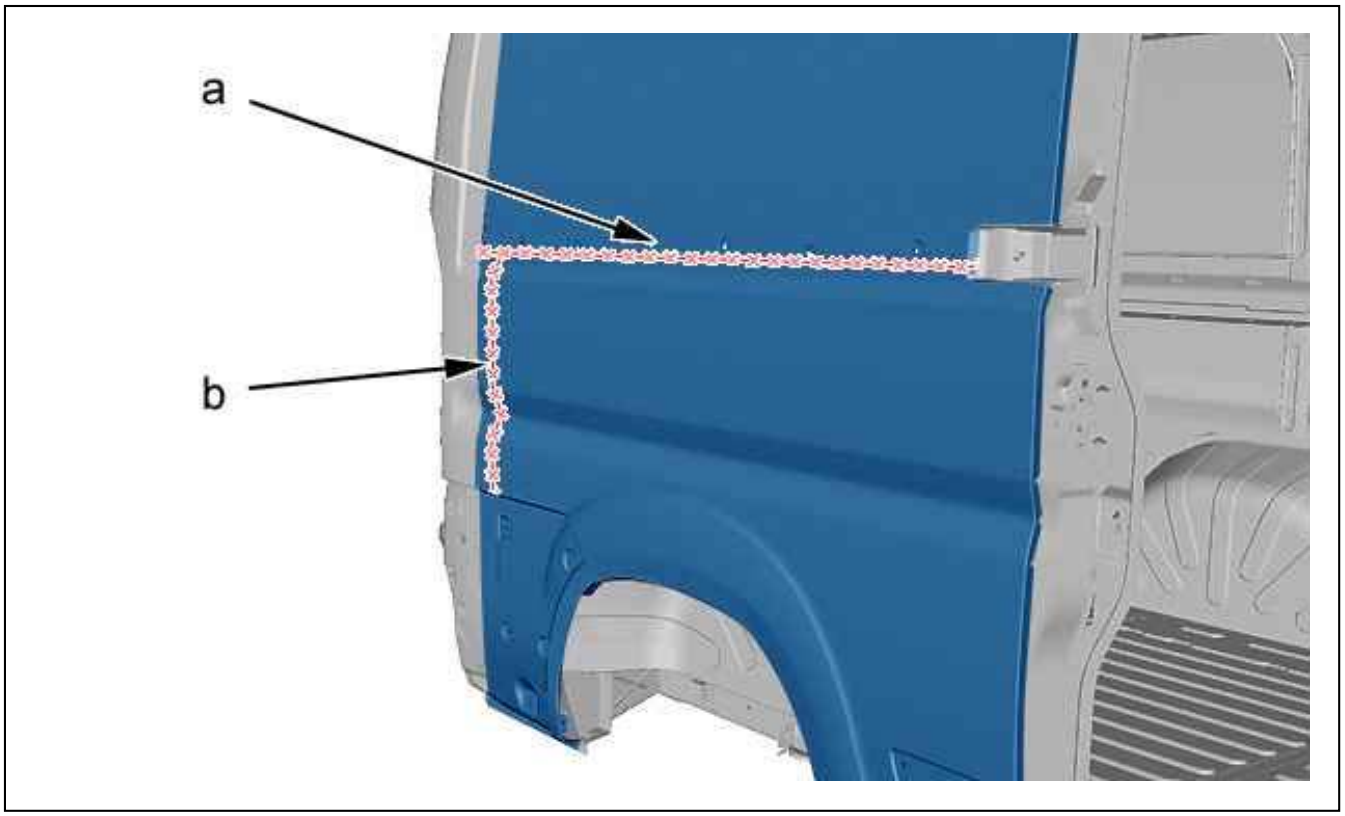

Figure : C4CP21QD

Figure 5.
Mark then cut (as "a").
Cut the rear RH side panel to approx. 1 cm to facilitate the separation of the spot weld lines (as "b").

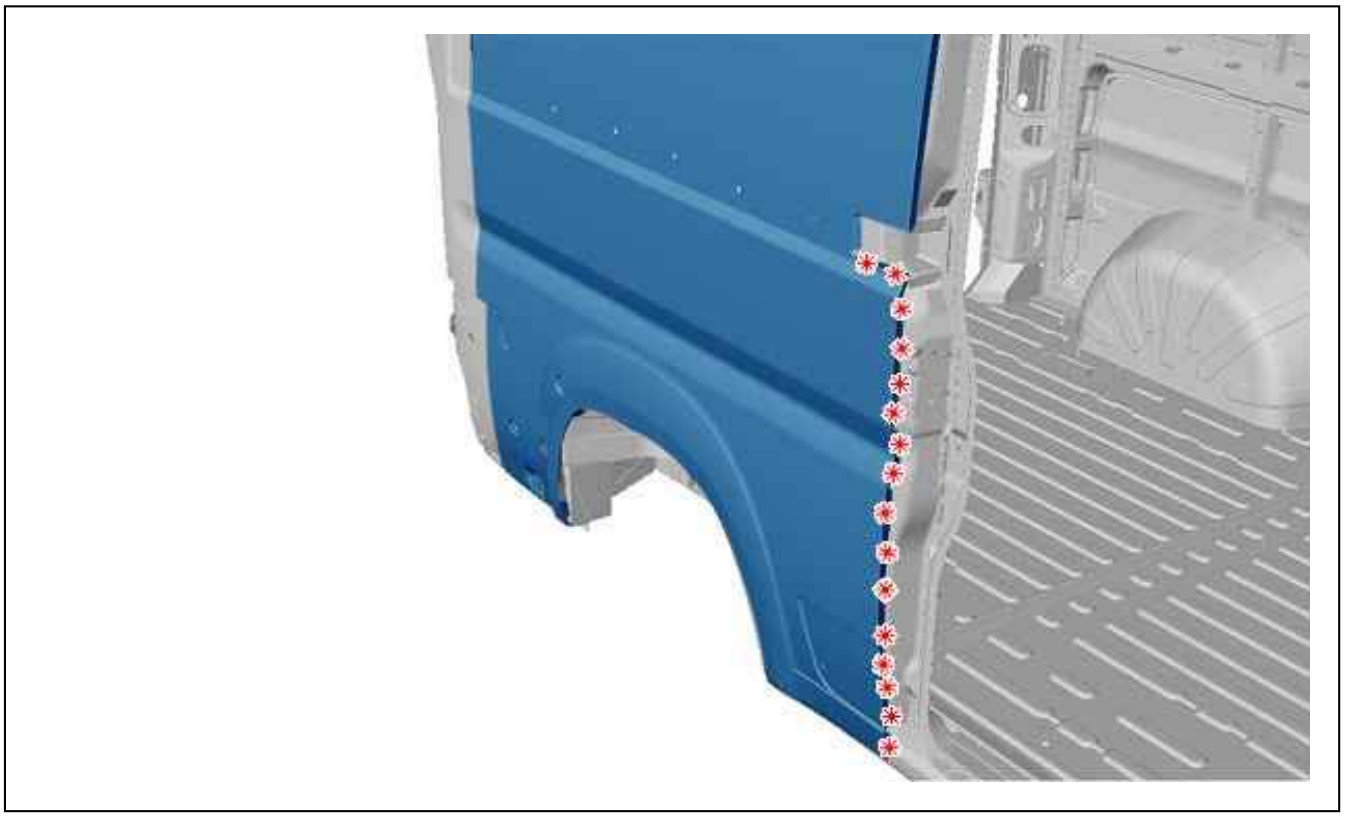

Figure : C4CP21RD

Figure 6.
Cut out the spot welds .

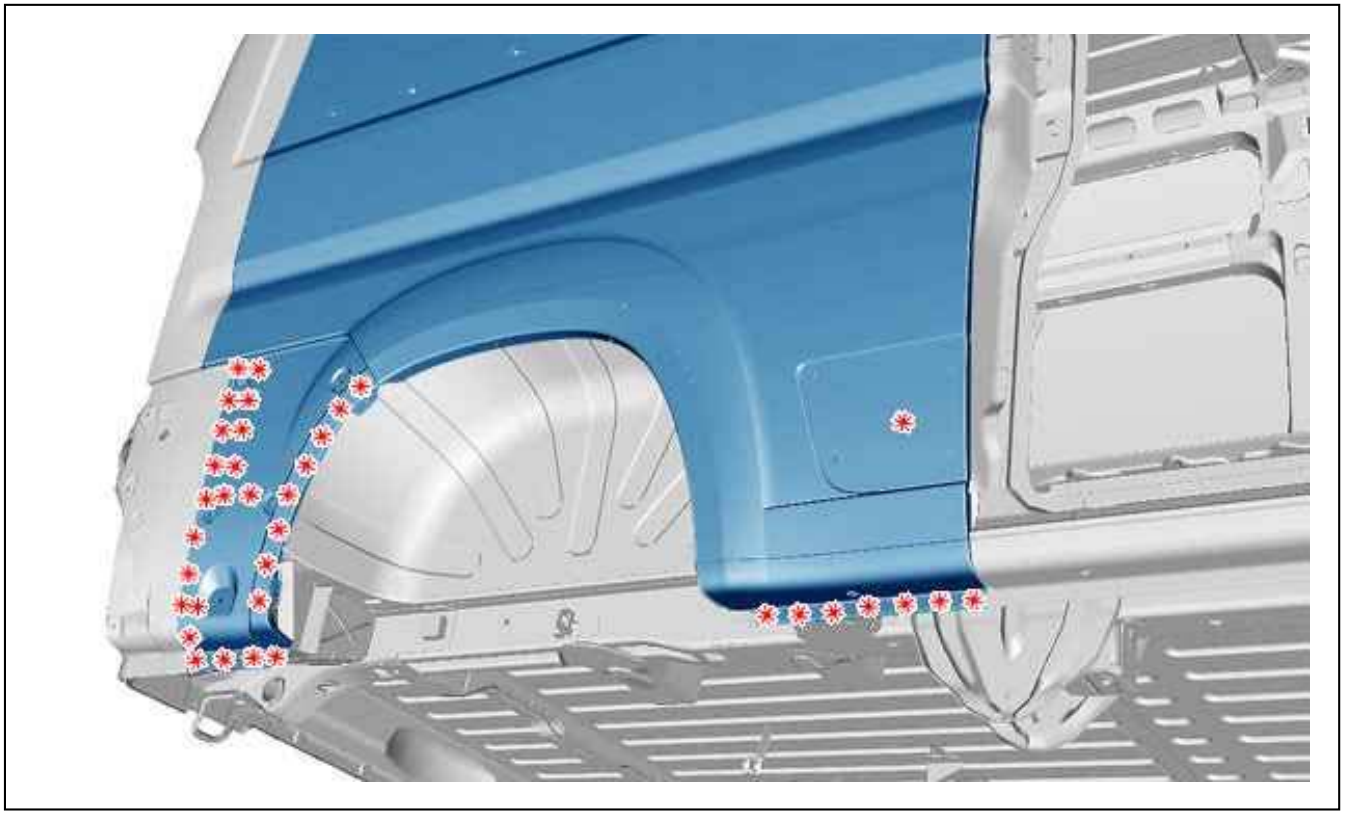

Figure : C4CP21SD

Figure 7.
Cut out the spot welds .
Remove the partial rear RH side panel .

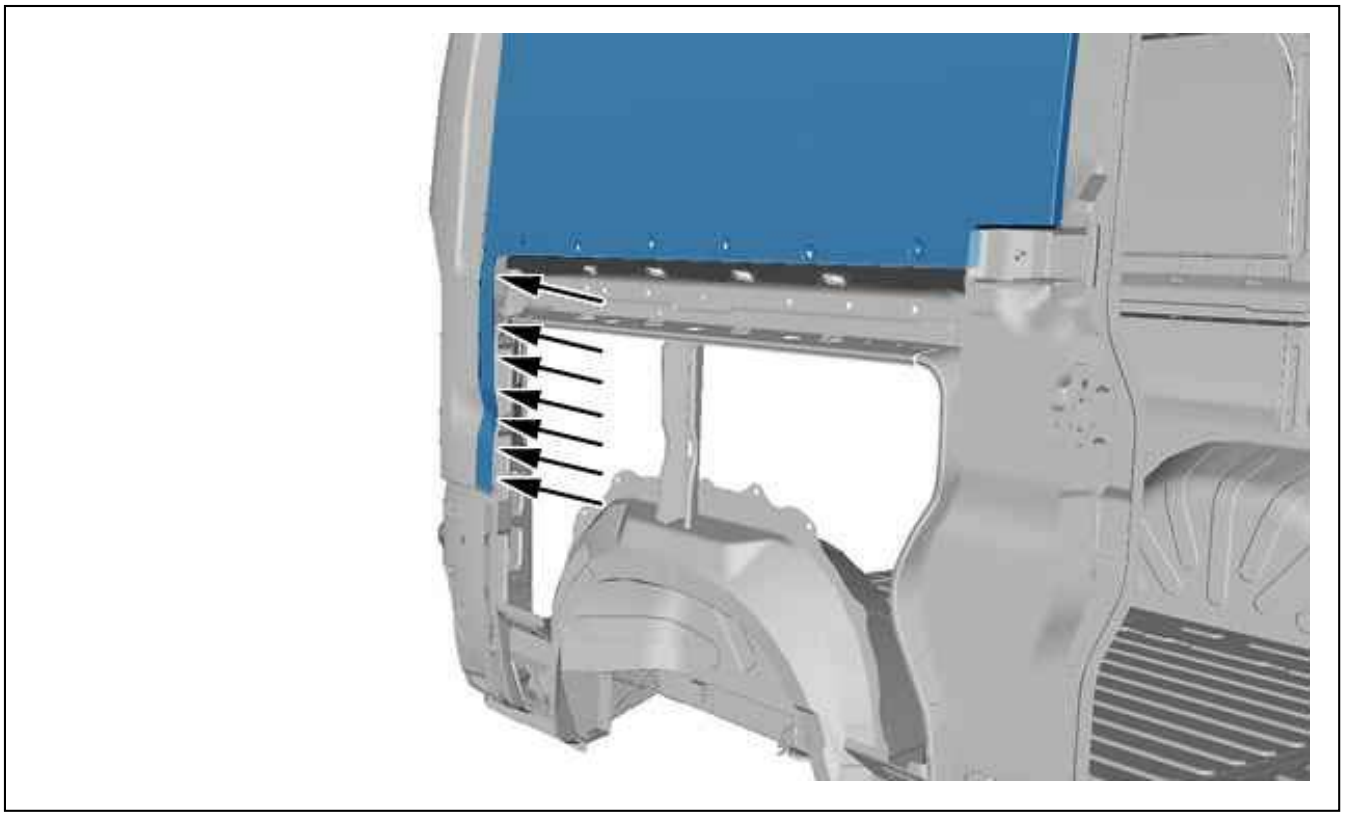

Figure : C4CP21TD

Figure 8.
Cut out the spot welds (In the direction of the arrow).
Remove the rest of the component.

5. Bodywork cleaning and preparation

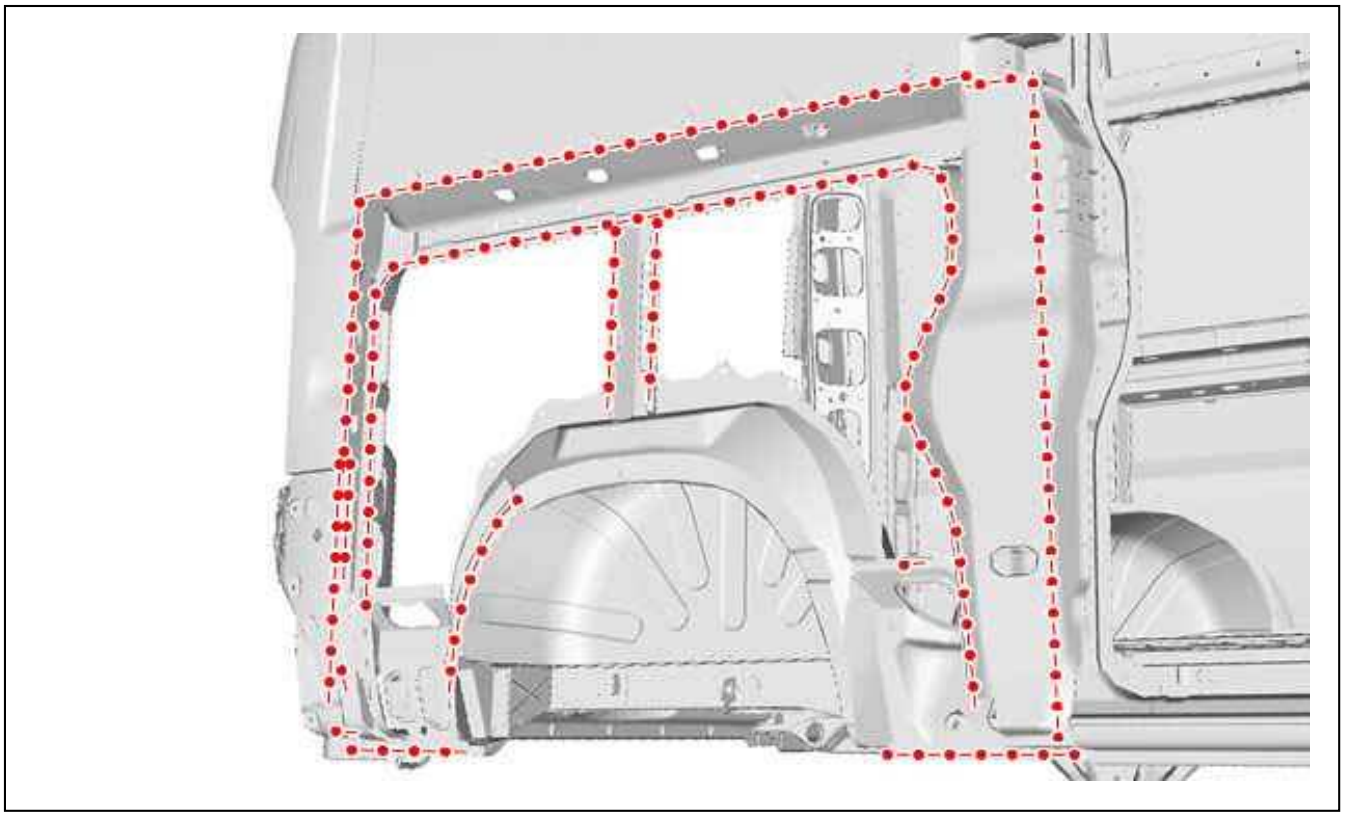

Figure : C4CP21UD

Figure 9.
Prepare the mating edges .
Align the mating edges and protect them with a weldable primer.

6. Adjustment

Present the component for adjustment.
Check the fits and clearances (See the corresponding operation).

7. Welding

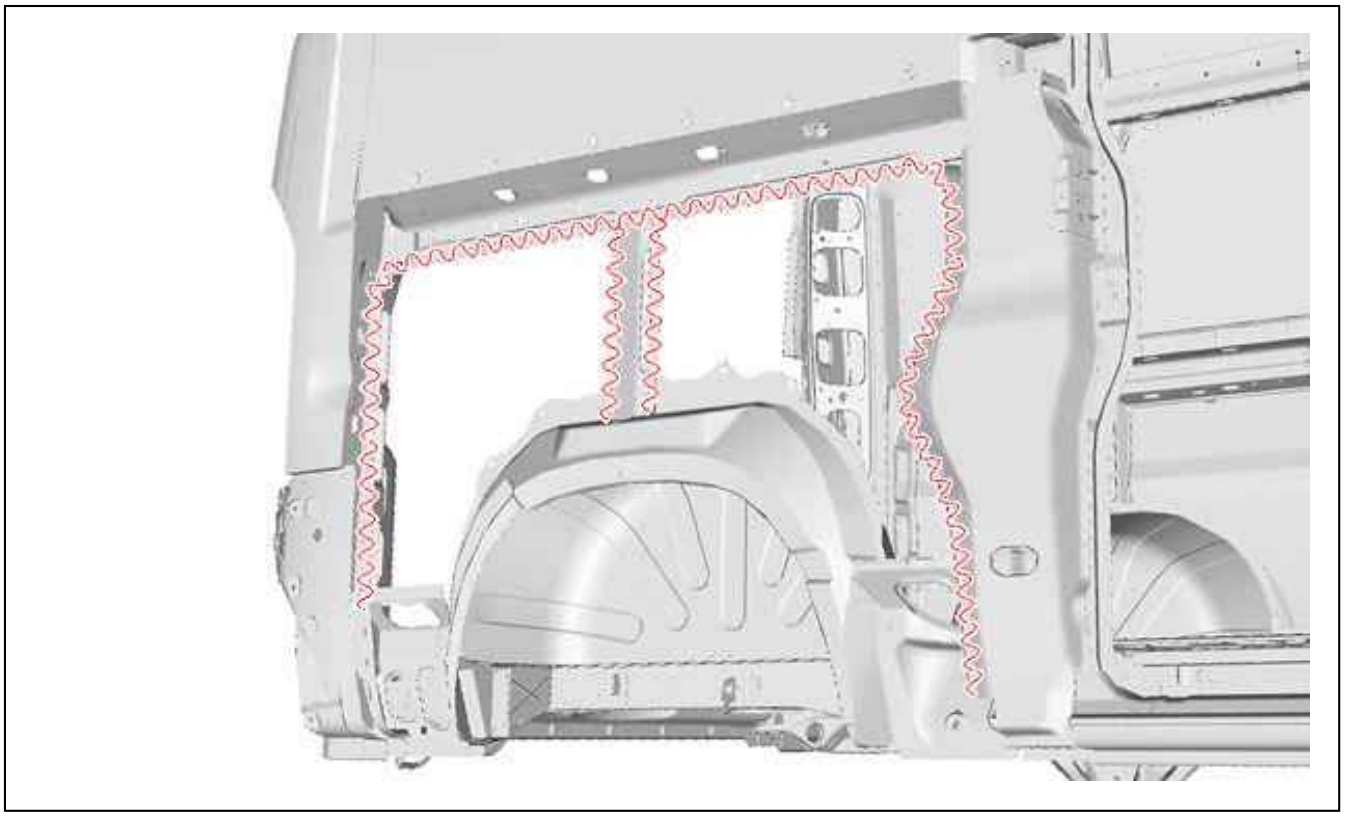

Figure : C4CP21VD

Figure 10.
Apply "A3" structural adhesive (See the corresponding operation).

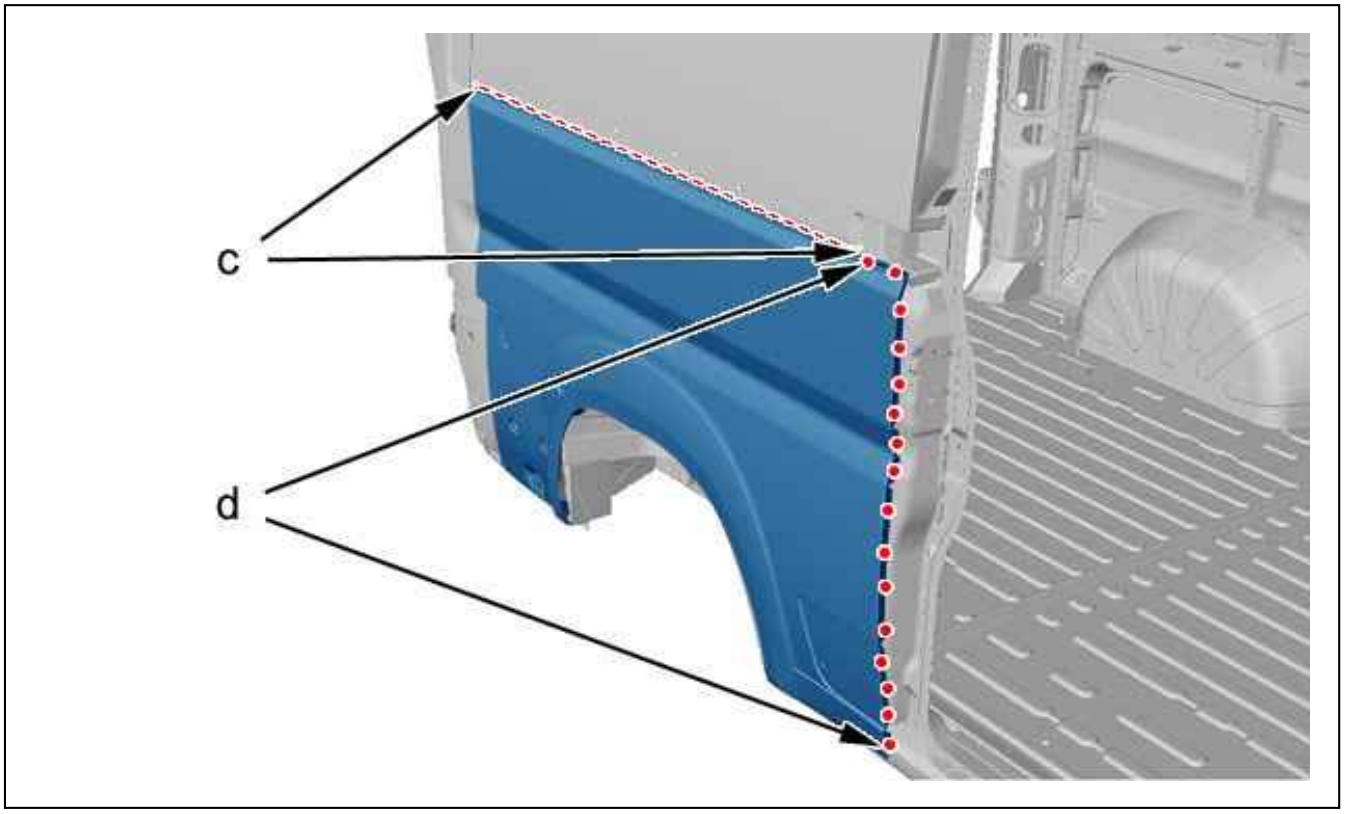

Figure : C4CP21WD

Figure 11.

Fit the partial rear RH side panel .
Weld by means of weld beads (as "c").
Grind the weld bead .
Weld with plug welds (as "d").
Grind the plug welds.

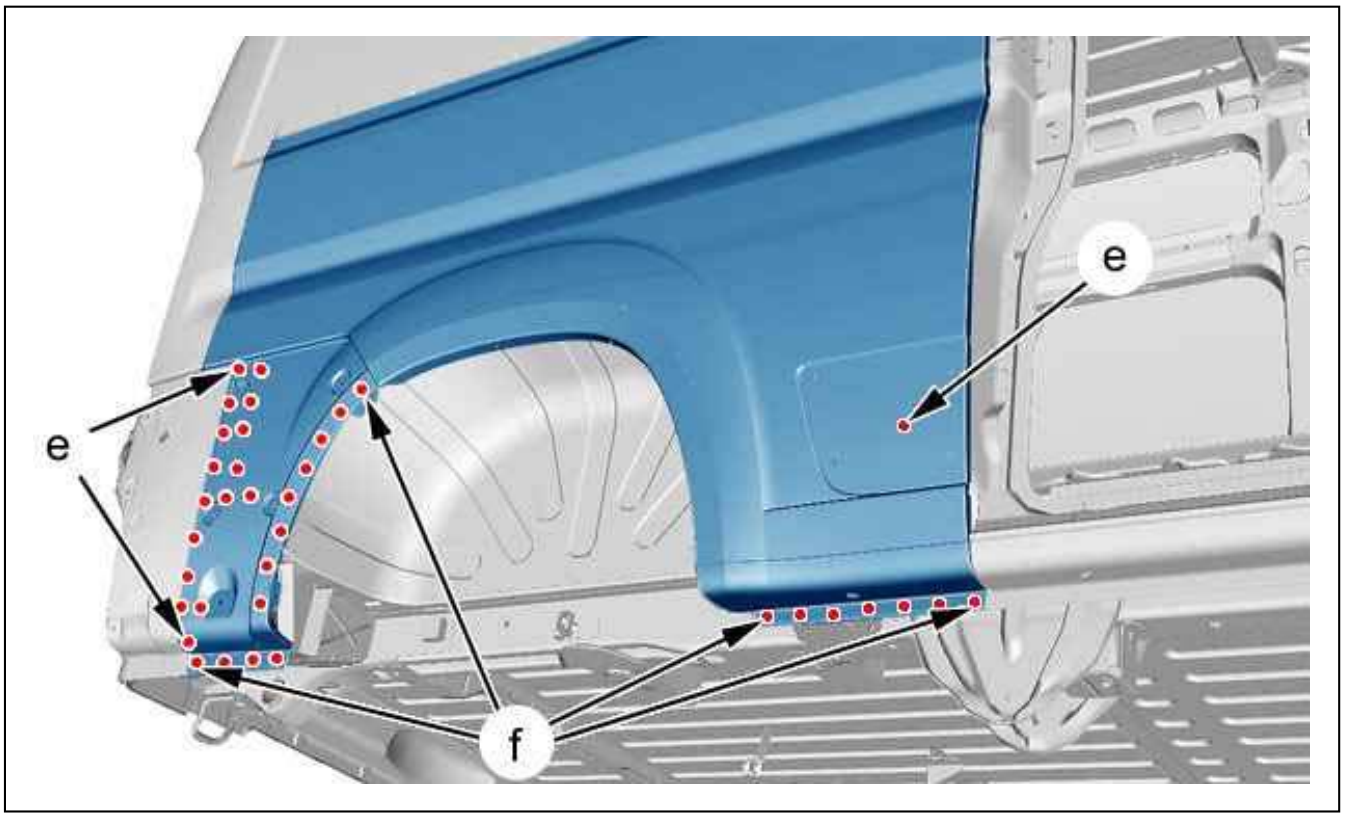

Figure : C4CP21XD

Figure 12.
Weld with plug welds (as "e").
Grind the plug welds.
Weld with electric spot welds (as "f").

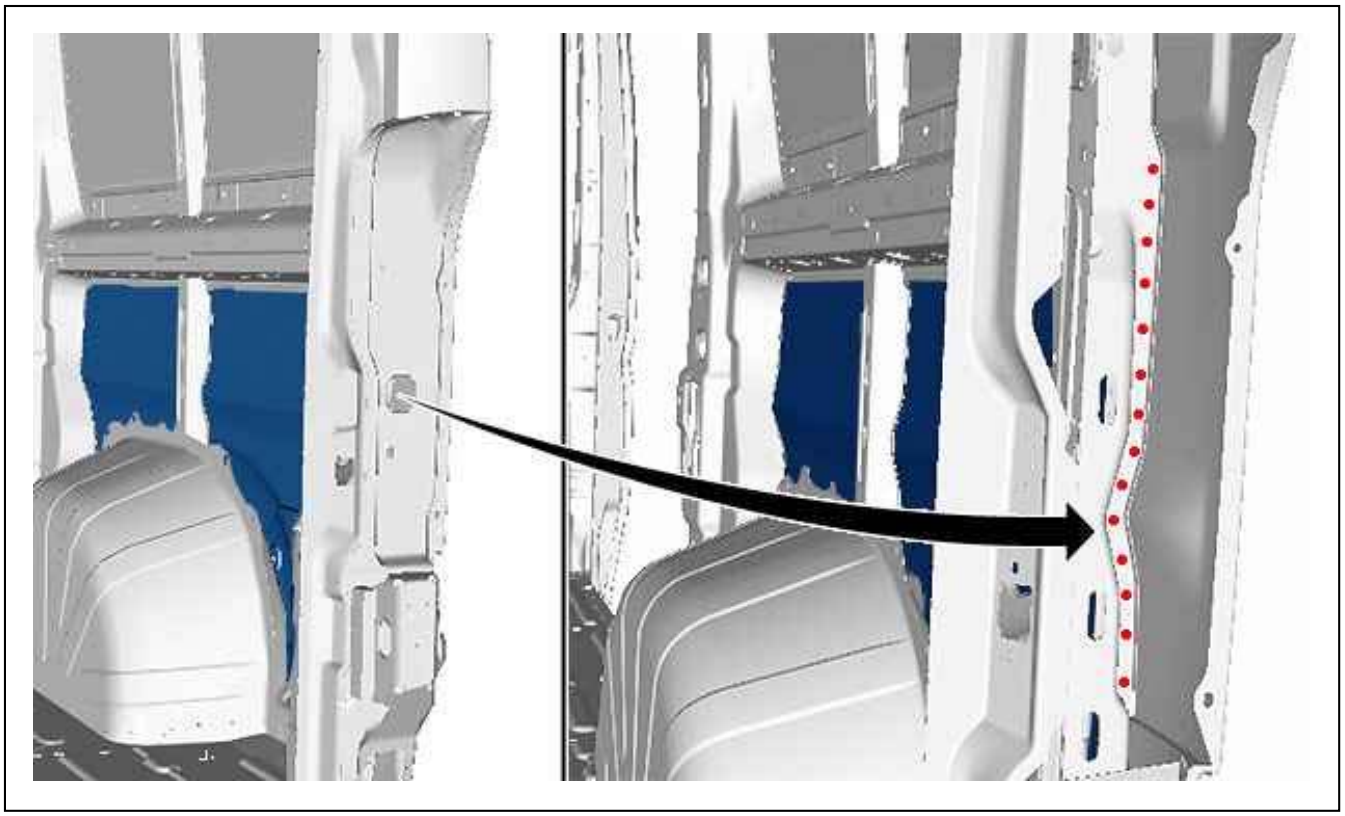

Figure : C4CP21YD

Figure 13.
Weld with plug welds.
Grind the plug welds.

8. Sealing

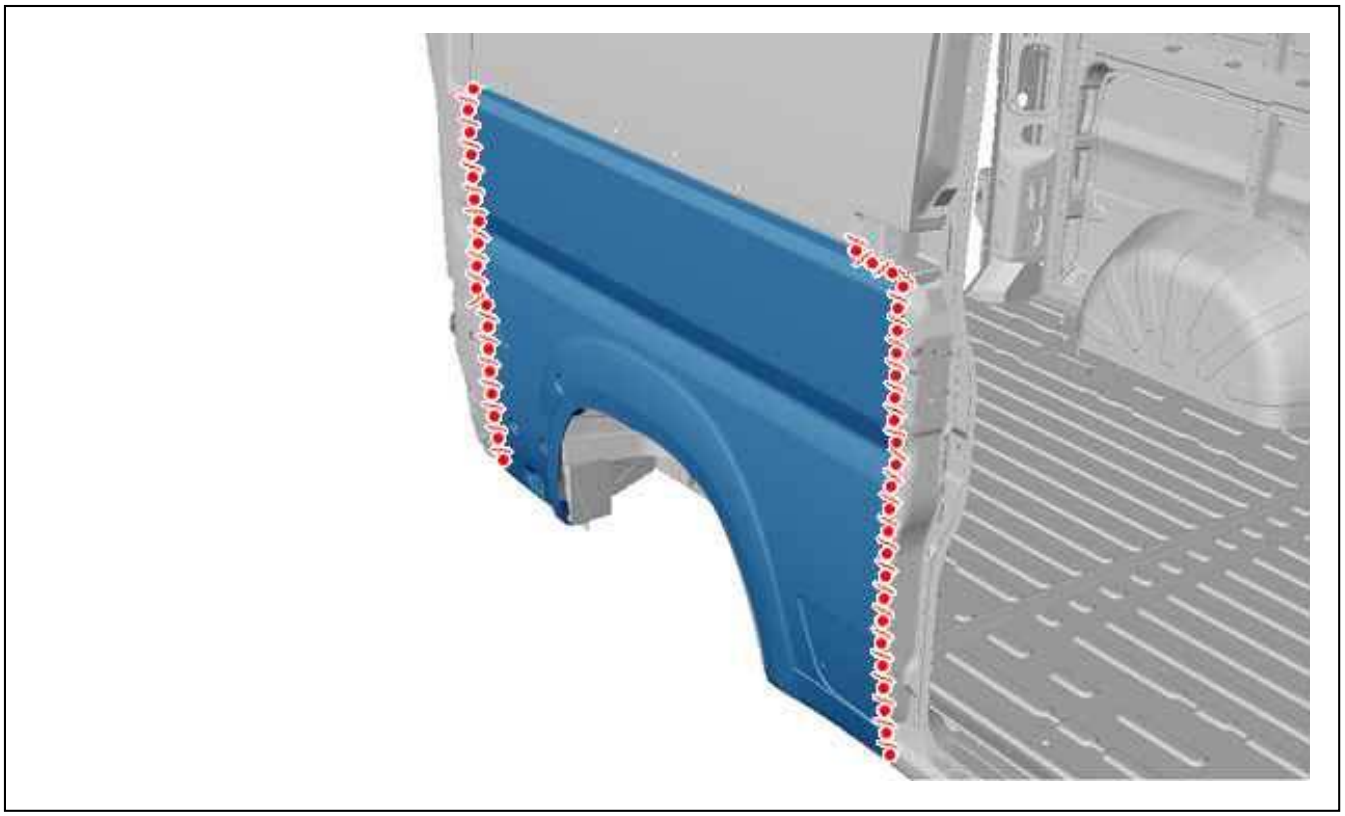

Figure : C4CP21ZD

Figure 14.
Apply a phosphate-print layer to the zones laid bare.
Apply a sealing mastic of type " A4" (See the corresponding operation).

9. Protection

Paint then spray into the hollow sections, product index C5, in the repair zone (See the corresponding operation).
Apply an anti-chip layer (See the corresponding operation).

10. Reinitialisation

Reconnect the battery.

ESSENTIAL : Perform the operations to be carried out following reconnection of the battery.

REMOVING - REFITTING : SIDE PANEL GLASS

ESSENTIAL : Observe the safety and cleanliness recommendations .

1. Recommended tools

Glazing consumable .

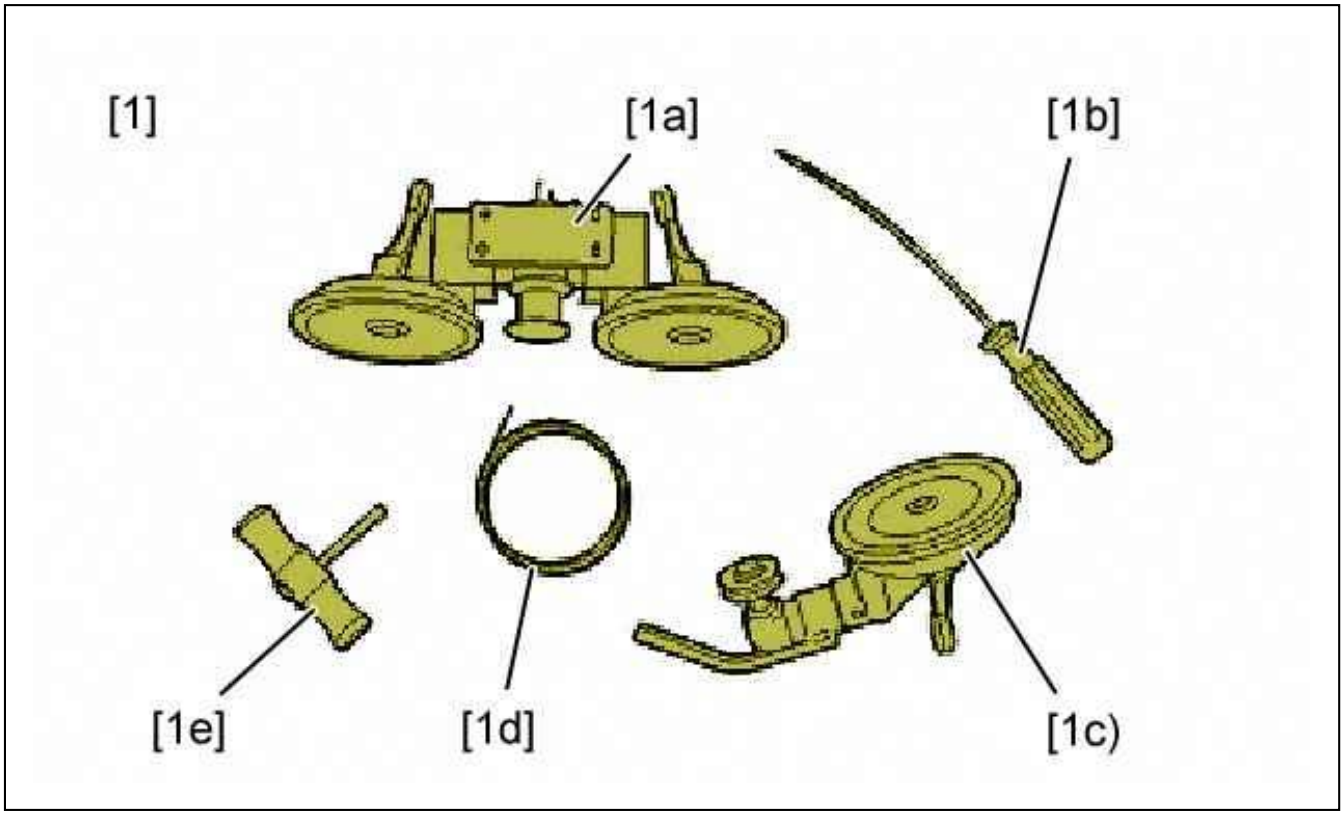

Figure : E5AP2ZQD

[1] Bonded windows removal kit (-).1354.
Composition of the toolkit :

- [1a] Guide roller device
- [1b] Awl
- [1c] Guiding roller
- [1d] Square section cutting wire
- [1e] handle

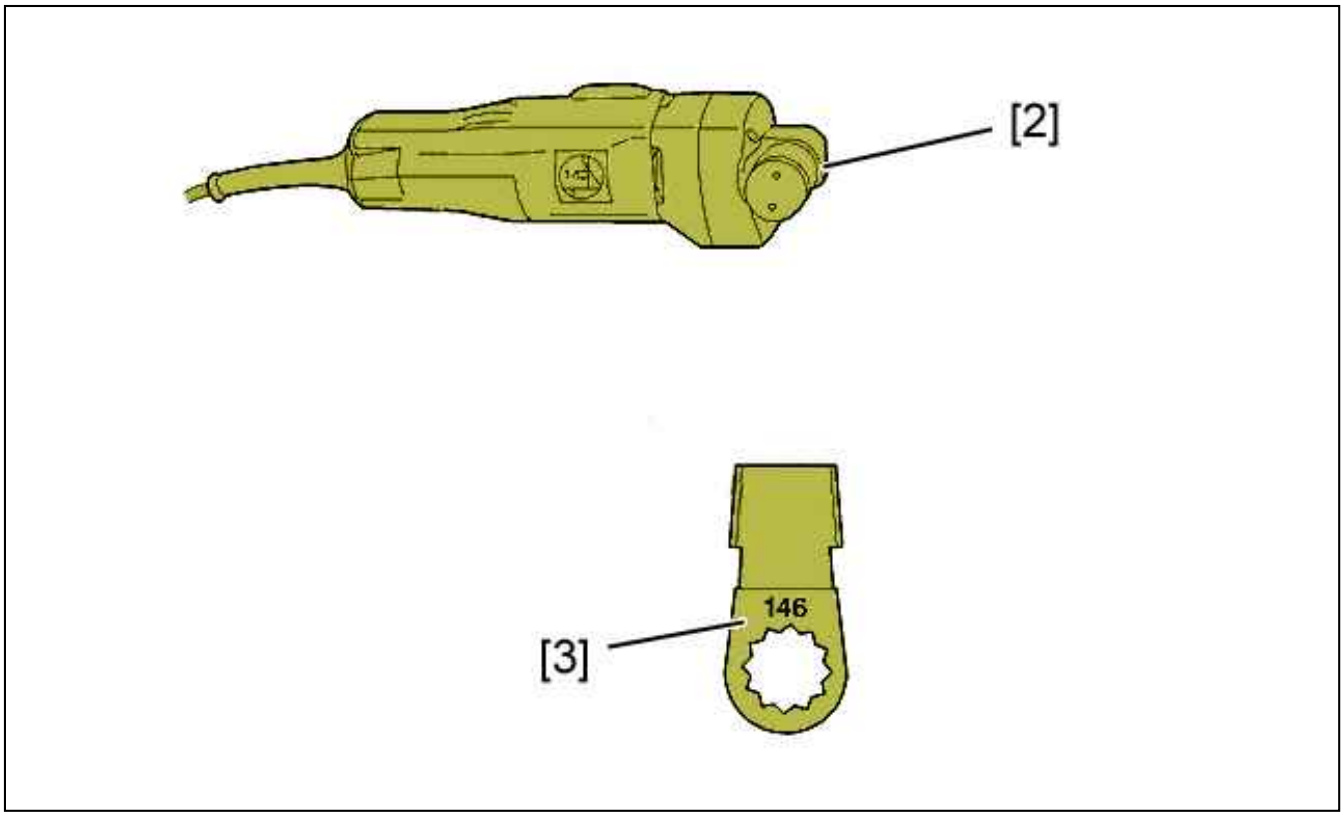

Figure : E5AP2ZRD

[2] electric knife.
[3] shovel blade N° 146.

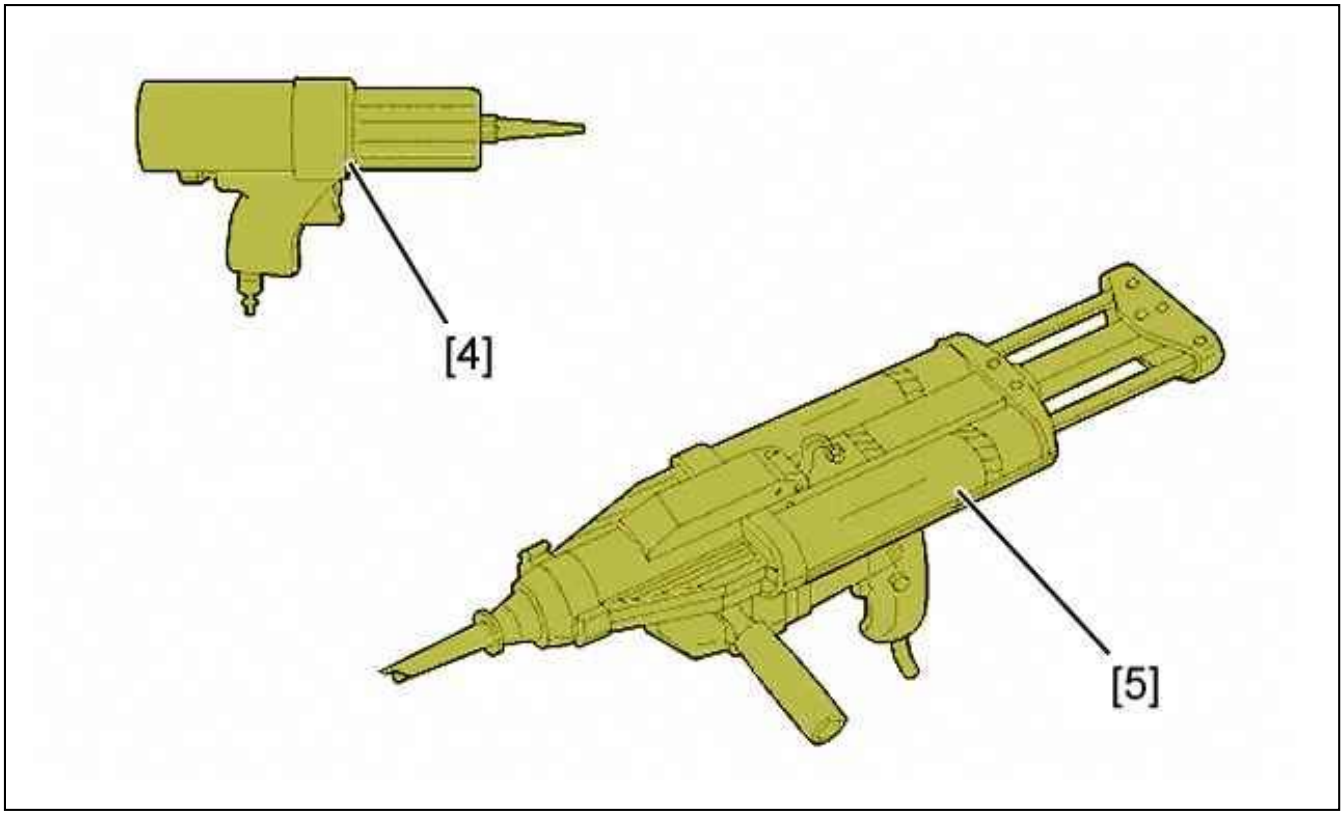

Figure : E5AP30AD

[4] Pneumatic gun (For one part cartridge).

[5] Electric gun (For two-part cartridge).

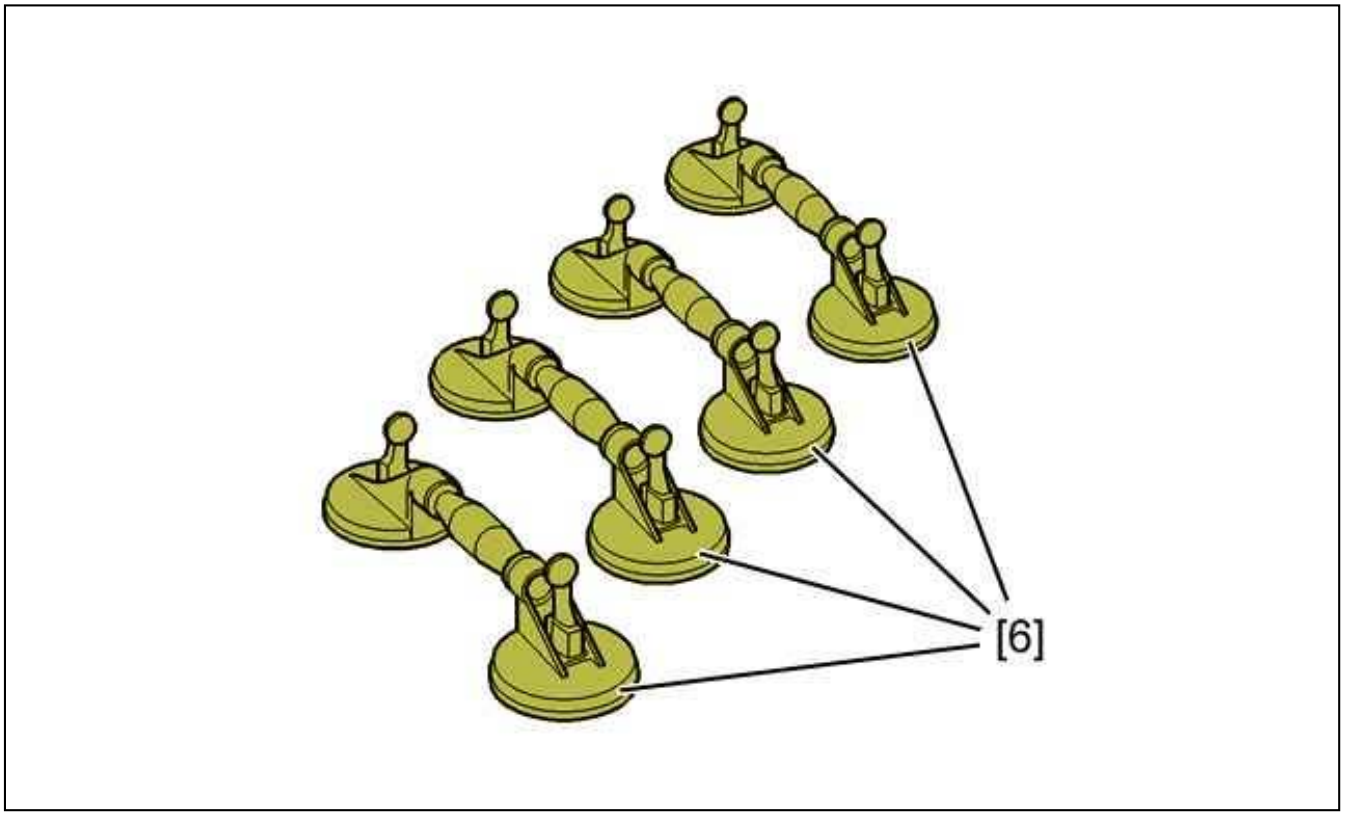

Figure : E5AP2ZTD

[6] Articulated suction pads (Part number 9776.Y0).

2. Removing

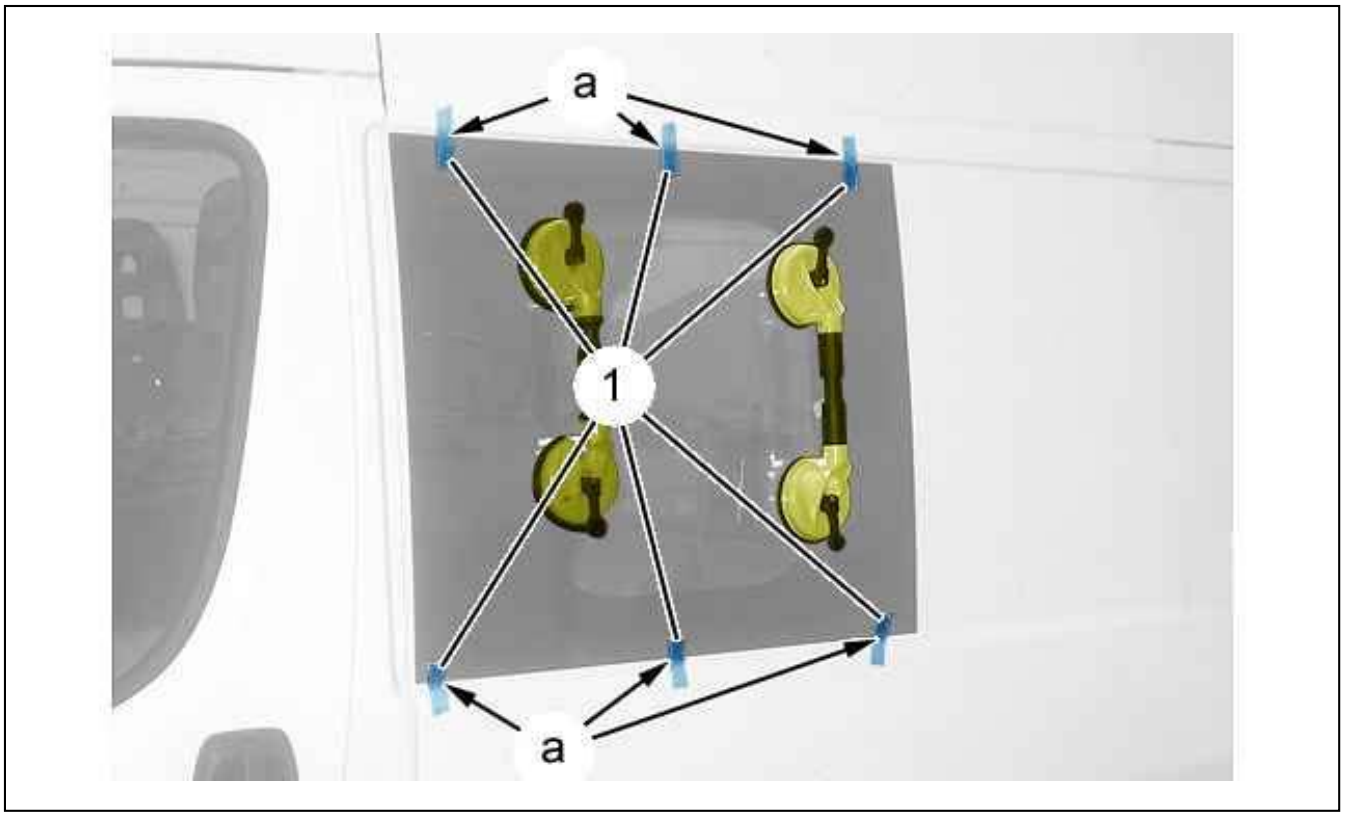

Figure : C5CM06ED

N.B. : If the window is to be reused, align it and affix adhesive tape (1) (as "a").

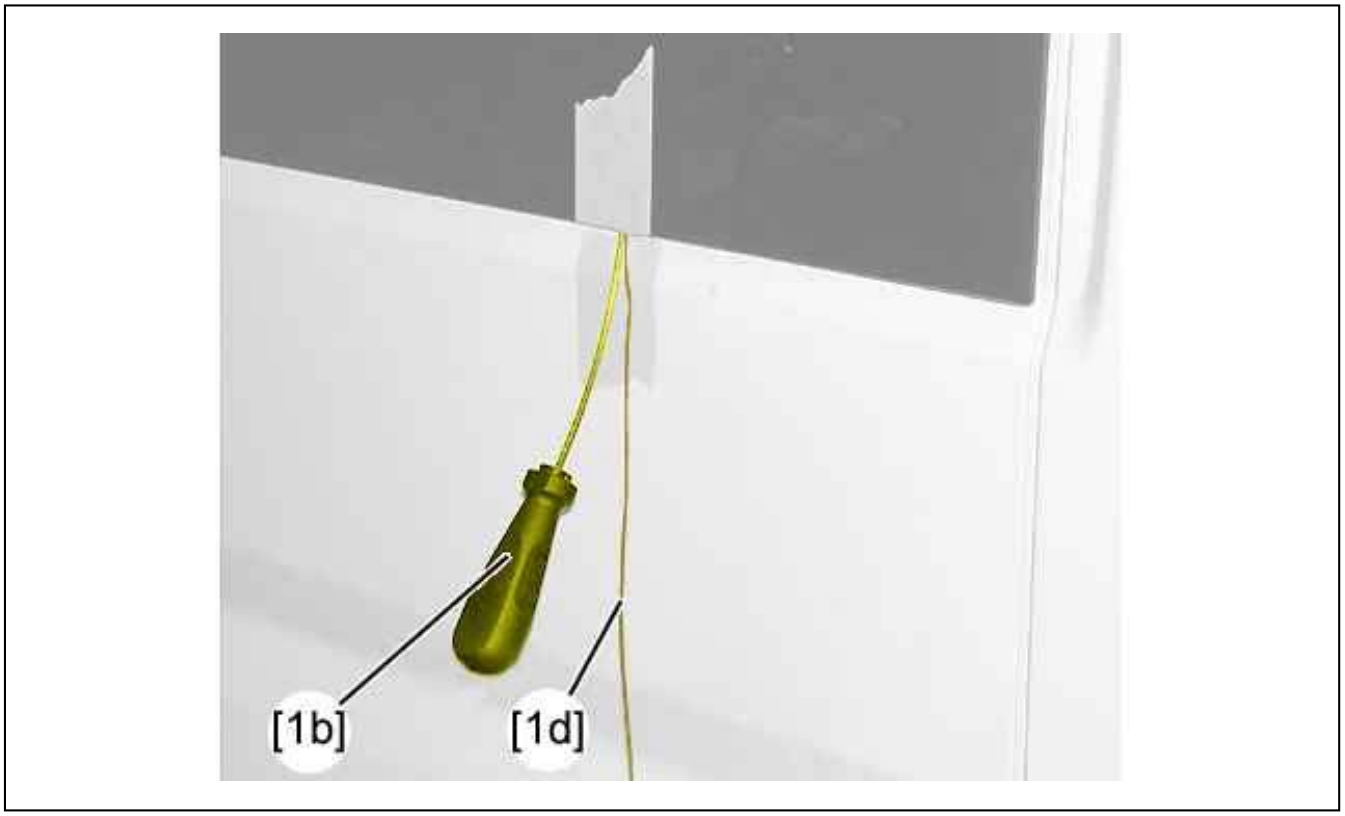

Figure : C5CM06FD

Pass the awl [1b] through the bead of sealing adhesive, from the inside towards the outside.

Attach the cutting wire [1d] to the awl [1b].
Pass the cutting wire [1d] inside the vehicle.
Leave a sufficient length to permit fixing of the handles [1e].
Install the handles [1e] at each end of the cutting wire [1d].

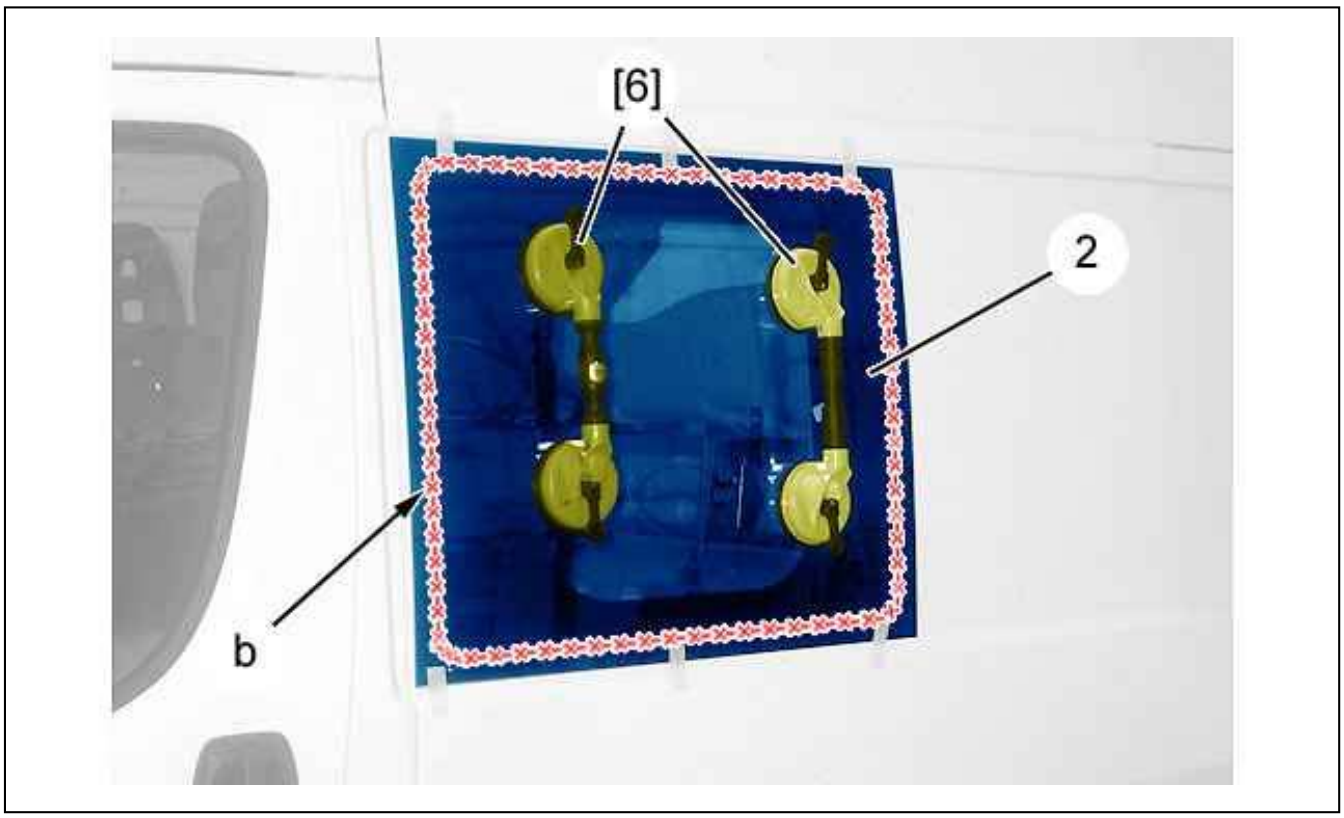

Figure : C5CM06GD

Position : The double articulated suction pads [6].
Two people are required to perform the following operation.
Cut the sealing adhesive (as "b").

N.B. : At the slightest resistance of the wire while cutting, slacken it and assist it in passing the obstacle (Suppor shims, excessive thickness of the bead of adhesive or join between panels).

Remove : The side panel glass (2) ; Using the double hinged suction cups [6].

3. Cleaning

3.1. Preparation : Side panel glass

Re-using the side panel glass :

- Fit the electric knife [2] with the blade [3]
- Remove the adhesive sealing bead
- Remove any dust using a clean cloth
- Only apply the primer to the zones laid bare

Fitting new side panel fixed glass :

- Degrease the edge of the glass with the degreaser
- Apply the glass primer provided in the bonding kit part number "A3"

N.B. : Only apply the primer to the zones laid bare.

3.2. Preparation of the aperture

On the remains of the bead of sealing adhesive :

- Fit the electric knife [2] with the blade [3]
- Remove the adhesive sealing bead
- Remove any dust using a clean cloth

On the new component :

- Degrease the aperture
- Apply the metal primer provided in the bonding kit part number "A3"
- Allow to dry for 10 mn

4. Refitting

4.1. Re-using the side panel glass

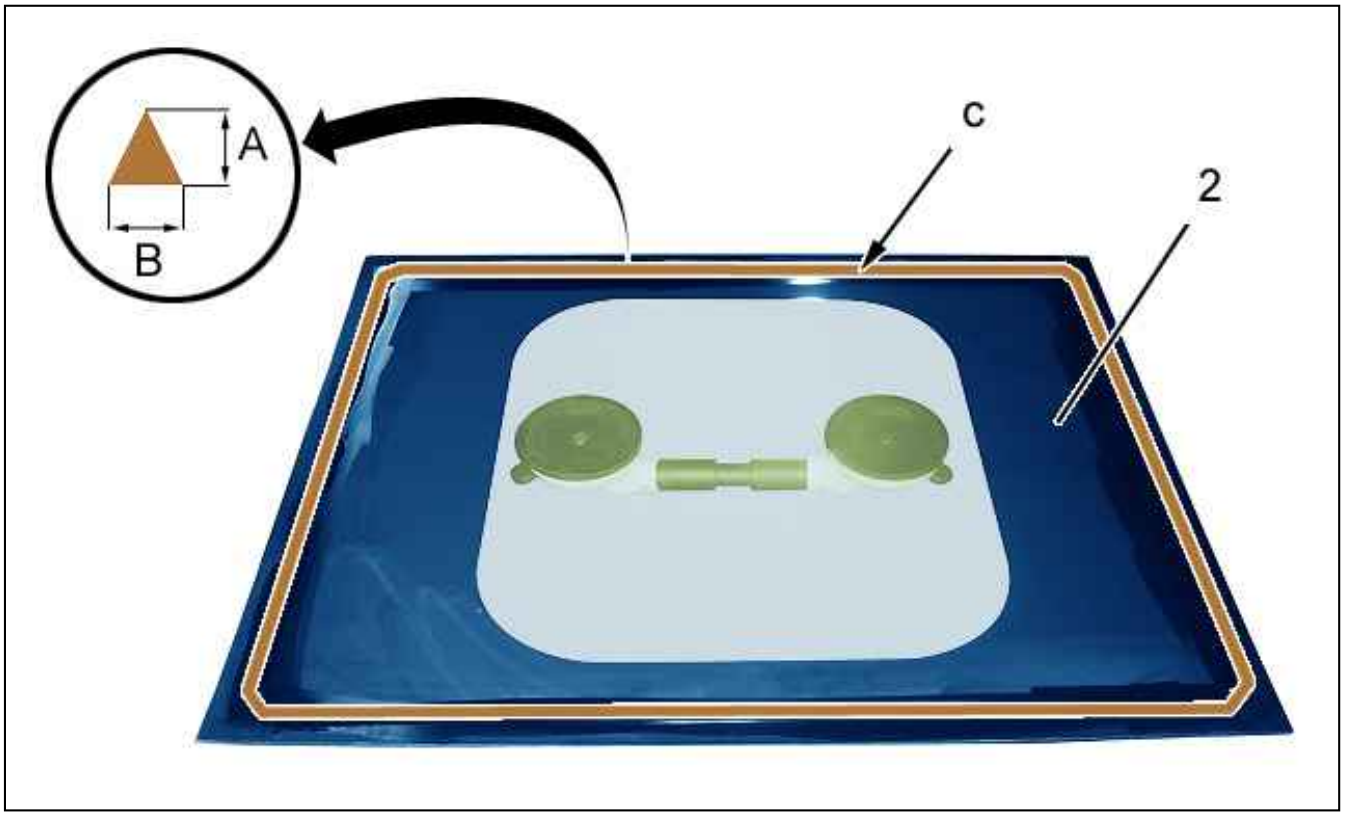

Figure : C5CM06HD

"A" = 12 mm .
"B" = 8 mm .
Cut the nozzle in triangular section to obtain a bead of sealing adhesive "B" wide and "A" deep.
Apply a bead of sealing adhesive on the surround of the side panel glass (2) (as "c") ; Using the tools [4] or [5].

CAUTION : If a two-pack product is used : The time between starting to extrude the sealing adhesive and fitting the window on the vehicle must not exceed 5 minutes.

Refit : The side panel glass :

- Using the double hinged suction cups [6]
- Using adhesive tapes (2)

Press lightly on the edge of the side panel glass (2).
Clean the fixed glass and its surround.

4.2. Fitting new side panel fixed glass

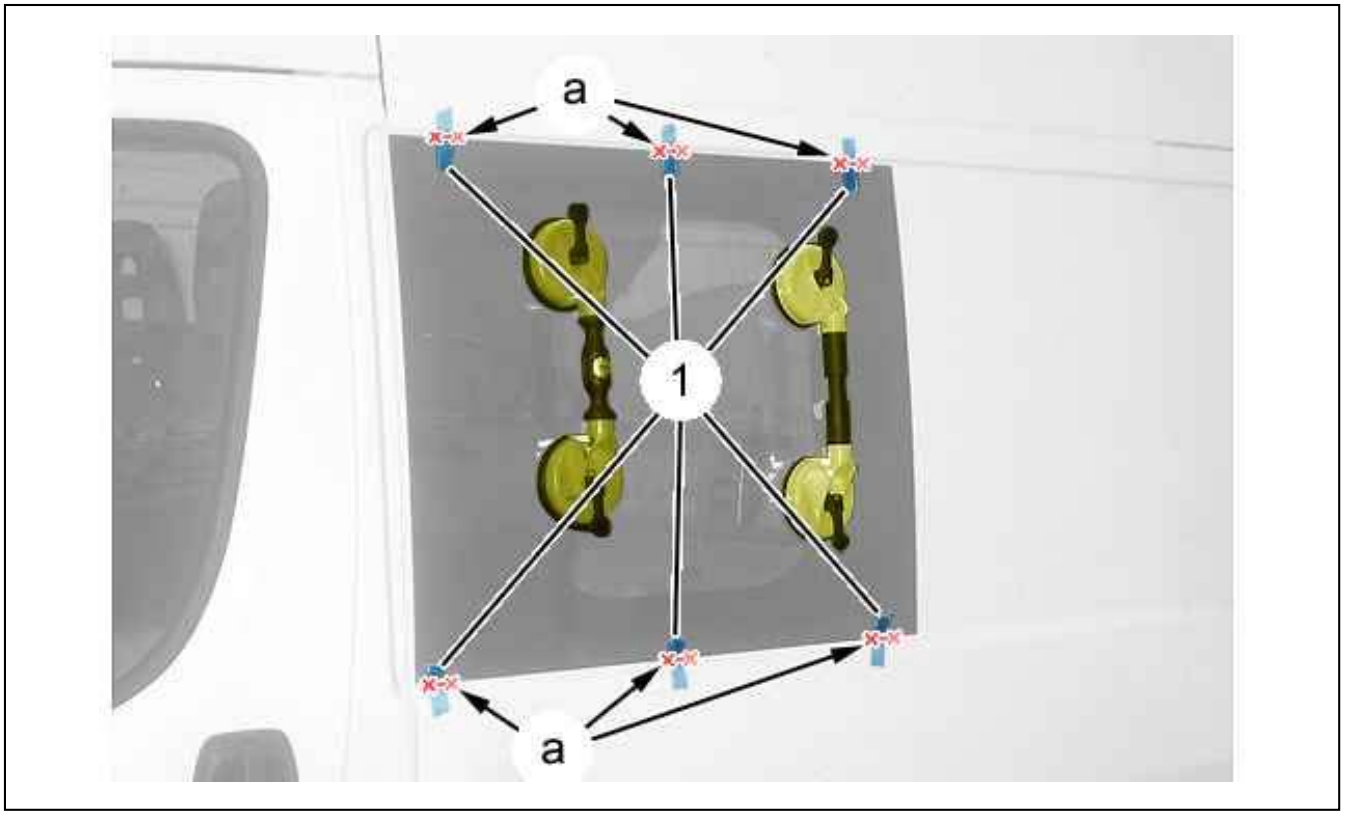

Figure : C5CM06JD

Test fit the sliding side door (2) window.
Position the adhesive strips (1).
Cut the tape (as "a").
Remove : The side panel glass (2).
Apply a bead of sealing adhesive to the periphery of the sliding side door (2) window (as "c") ; Using the tools [4] or [5].

CAUTION : If a two-pack product is used : The time between starting to extrude the sealing adhesive and fitting the window on the vehicle must not exceed 5 minutes.

Refit : The sliding side door window :

- Using the double hinged suction cups [6]
- Using adhesive tapes (2)

Press gently on the periphery of the sliding side door (3) fixed window .
Clean the side panel fixed glass and its surround.

CAUTION : Observe the vehicle immobilisation time following fitting of the windscreen recommended by the suppliers of the products used.

Continue the fitting operations in the reverse order to removal.
Check the sealing of the side panel glass (2).
Clean the side panel fixed glass (2) and its surround.

REMOVING - REFITTING : REAR QUARTER WINDOW

ESSENTIAL : Observe the safety and cleanliness recommendations .

1. Tooling

Presentation :

- Glazing tools
- Glazing consumables

2. Removing

Remove :

- Sliding side door rail (right hand side)
- Headlining (LH side or RH side)

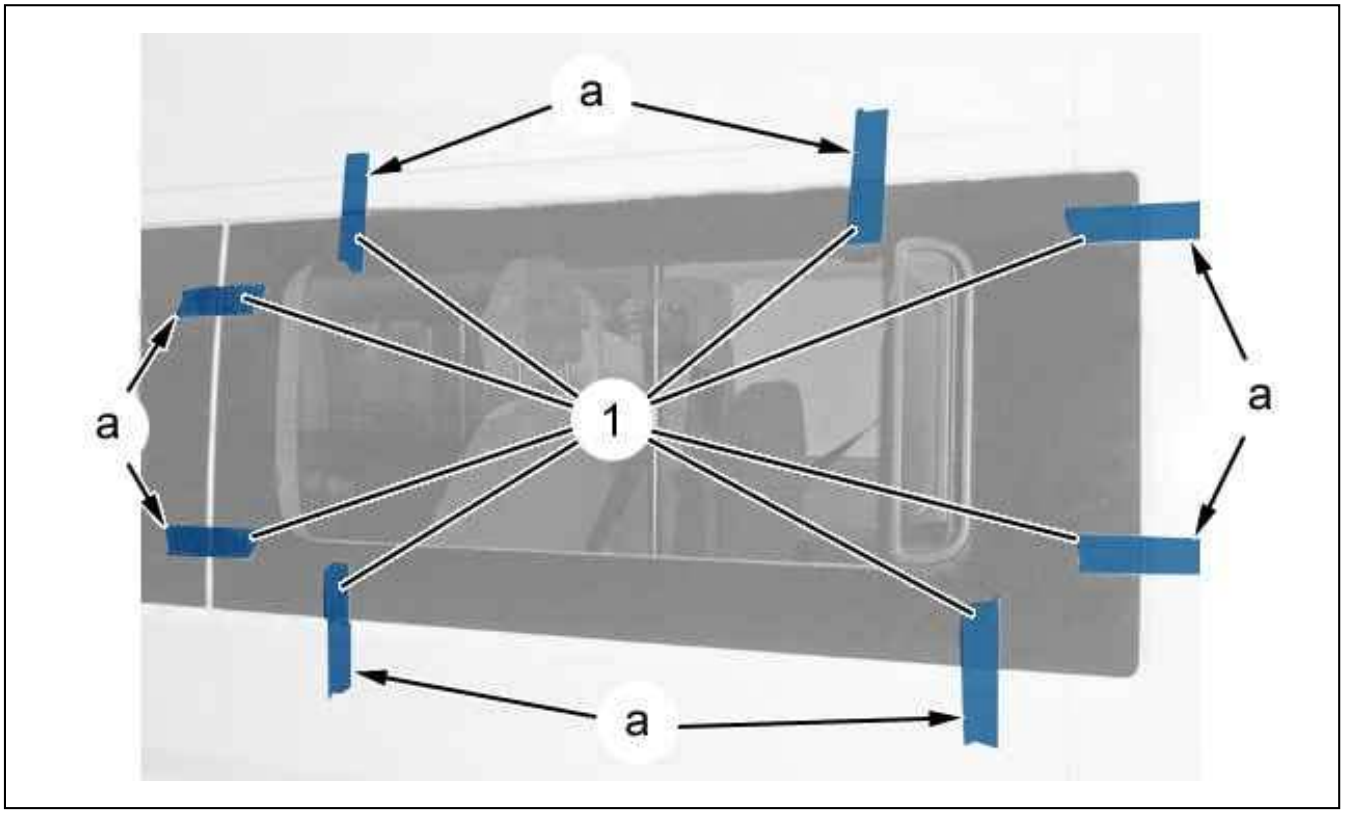

Figure : C5CM01TD

N.B. : If the rear quarter window is to be reused, align it and position adhesive tape (1) ; As indicated above (at "a").

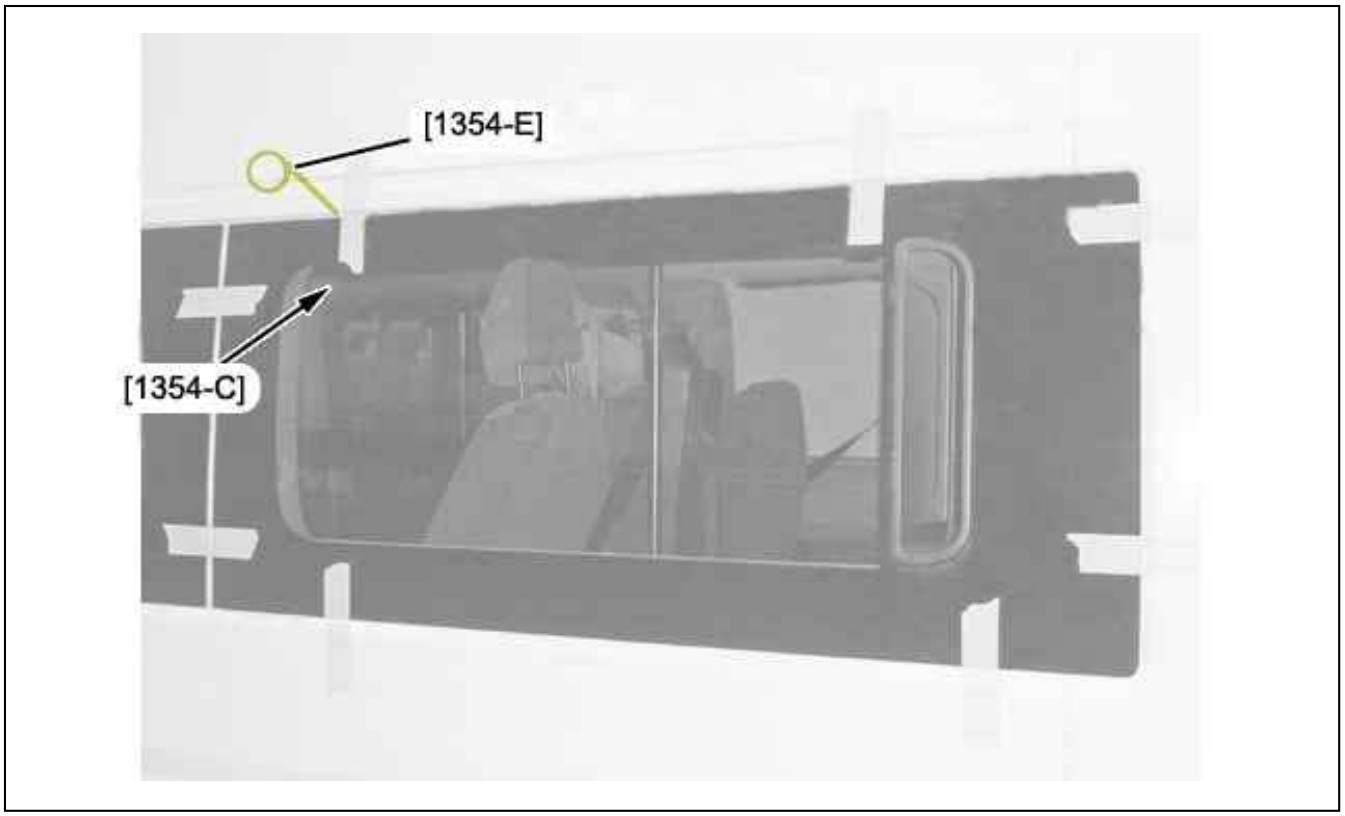

Figure : C5CG0K2D

Pass the awl [1354-C] through the bead of sealing adhesive, from the inside towards the outside.
Attach the cutting wire [1354-E] to the awl [1354-C].
Pass the cutting wire [1354-E] inside the vehicle.
Leave a sufficient length to permit fixing of the handles [1354-D].
Install the handles [1354-D] at each end of the cutting wire [1354-E].

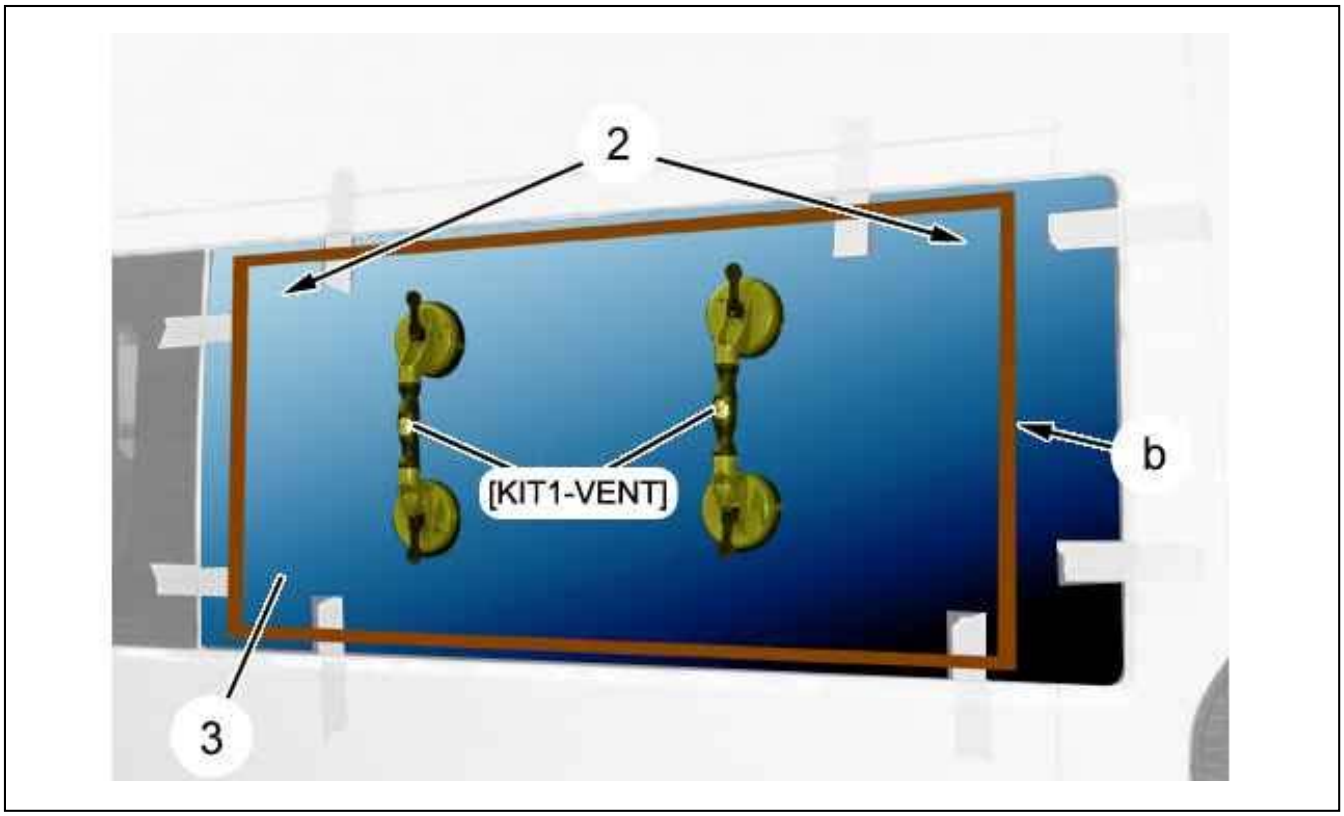

Figure : C5CG0K5D

Position : The double articulated suction pads [KIT1-VENT].
Two people are required to perform the following operation.
The indexing pins (2) must be cut.
Cut the sealing adhesive (at "b").

N.B. : At the slightest resistance of the wire while cutting, slacken it and assist it in passing the obstacle (Suppor shims, excessive thickness of the bead of adhesive or join between panels).

Remove the quarter window (3) ; Using the double hinged suction cups [KIT1-VENT].

3. Cleaning

3.1. Preparing the quarter window

Re-use of the quarter window :

- Fit the electric knife [FEIN-400E] with the blade N°146
- Remove the adhesive sealing bead
- Remove any dust using a clean cloth
- Only apply the primer to the zones laid bare

Fitting a new quarter window :

- Degrease the edge of the quarter window ; Using the degreaser
- Apply the glass primer provided in the bonding kit part number "A3"

N.B. : Only apply the primer to the zones laid bare.

3.2. Preparation of the aperture

On the remains of the bead of sealing adhesive :

- Fit the electric knife [FEIN-400E] with the blade N°146

- Remove the adhesive sealing bead
- Remove any dust using a clean cloth

On the new component :

- Degrease the aperture
- Apply the metal primer provided in the bonding kit part number "A3"
- Allow to dry for 10 mn

4. Refitting

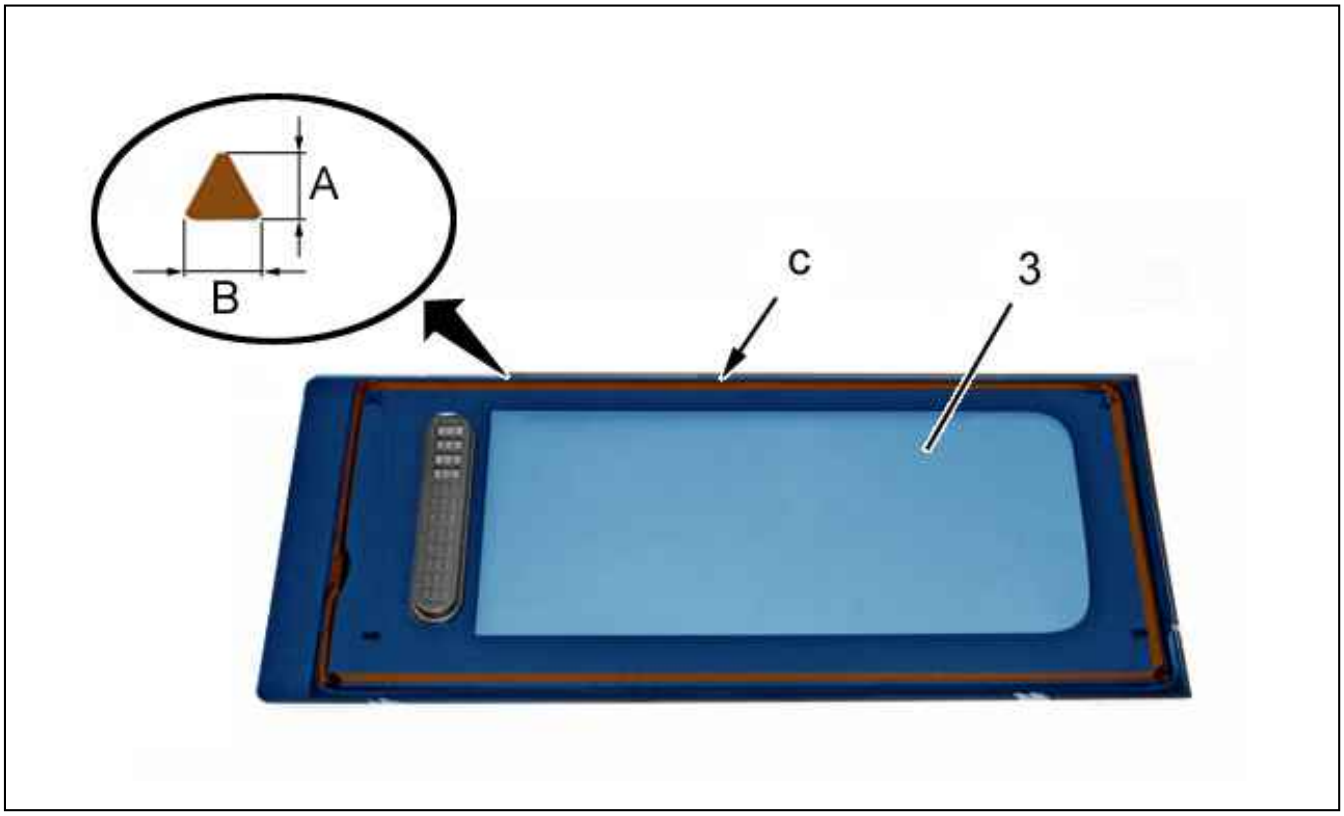

Figure : C5CM01WD

"A" = 12 mm .
"B" = 8 mm .
Cut the nozzle in triangular section to obtain a bead of sealing adhesive "B" wide and "A" deep.

ESSENTIAL : Always replace the seals .

4.1. Re-use of the quarter window

Apply the adhesive sealing bead on the surround of the quarter window (3) (at "c").

ESSENTIAL : Use of the two part product: the time for fitting the window on the vehicle and the start of extrusion of the sealing adhesive is 5 minutes.

Refit the rear quarter window :

- Using the double hinged suction cups [KIT1-VENT]
- Using adhesive tapes (1)

Check the clearances and flushness of the rear quarter light.

Lightly press on the periphery of the rear quarter window (3).
Clean the quarter window and its surround.

4.2. Fitting a new quarter window

Test fit the rear quarter window (3).
Position adhesive tape (1) as indicated above, then cut it (at "a").
Remove the quarter window (3).
Apply a bead of adhesive at "c" on the edge of the rear quarter window (3).

ESSENTIAL : Use of the two part product: the time for fitting the window on the vehicle and the start of extrusion of the sealing adhesive is 5 minutes.

Refit the rear quarter window :

- Using the double hinged suction cups [KIT1-VENT]
- Using adhesive tapes(1)

Check the clearances and flushness of the rear quarter light.
Lightly press on the periphery of the rear quarter window (3).
Clean the quarter window and its surround.

ESSENTIAL : Observe the vehicle immobilisation time following fitting of the windscreen recommended by the suppliers of the products used.

Continue the fitting operations in the reverse order to removal.
Check the sealing of the quarter window(3).
Clean the quarter window and its surround.

REMOVING - REFITTING : SIDE PANEL WINDOW

ESSENTIAL : Observe the safety and cleanliness recommendations.

1. Recommended tools

Glazing consumable .

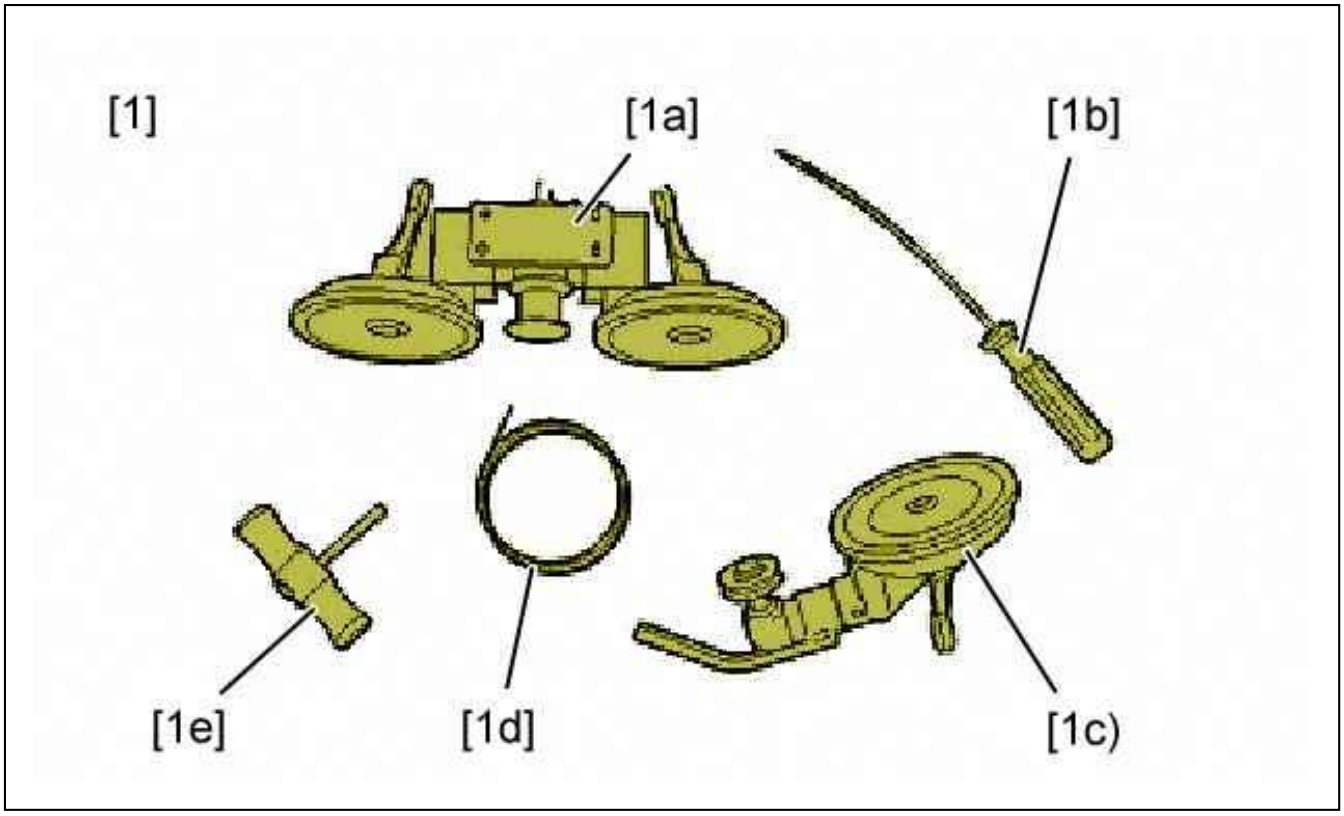

Figure : E5AP2ZQD

[1] Bonded windows removal kit (-).1354.
Composition of the toolkit :

- [1a] Guide roller device
- [1b] Awl
- [1c] Guiding roller
- [1d] Square section cutting wire
- [1e] handle

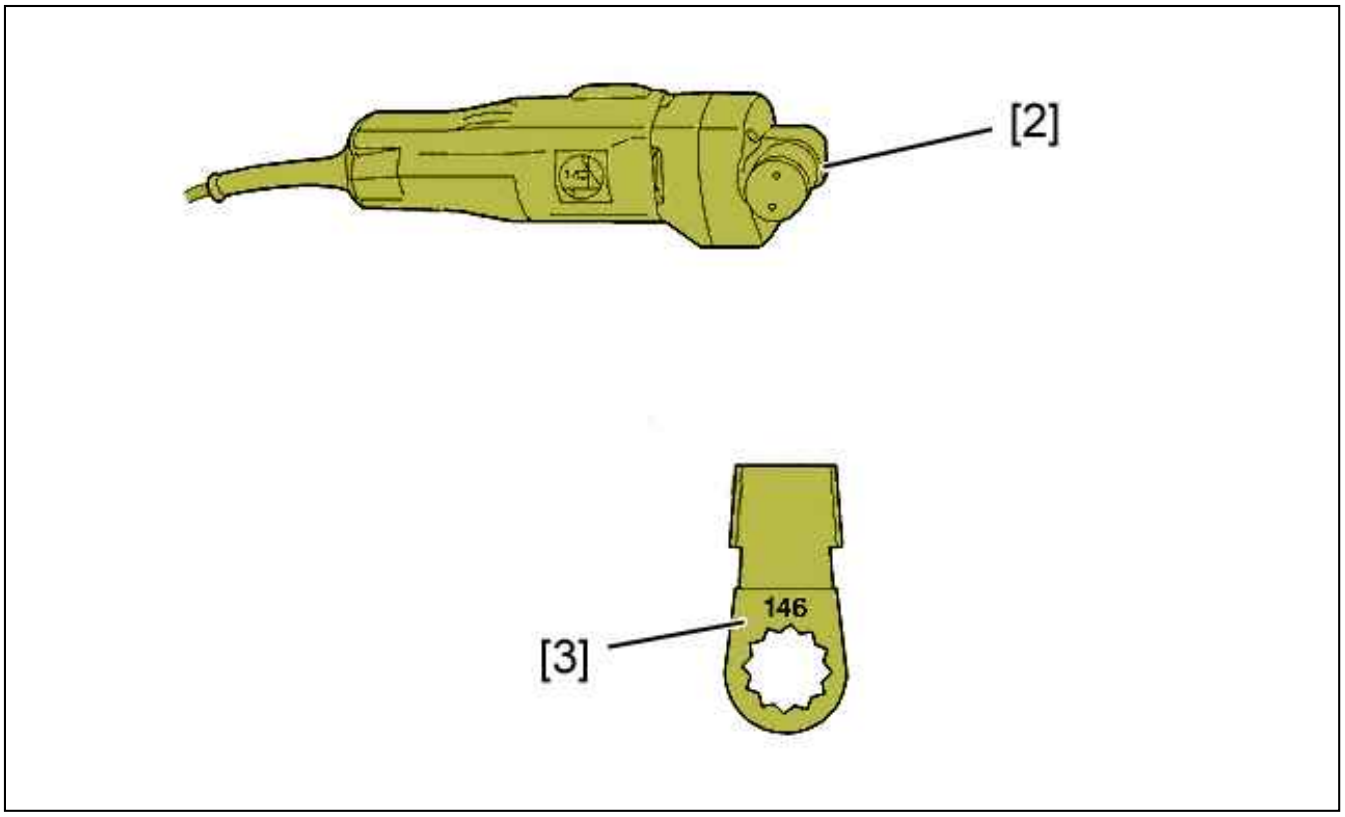

Figure : E5AP2ZRD

[2] electric knife.
[3] shovel blade N° 146.

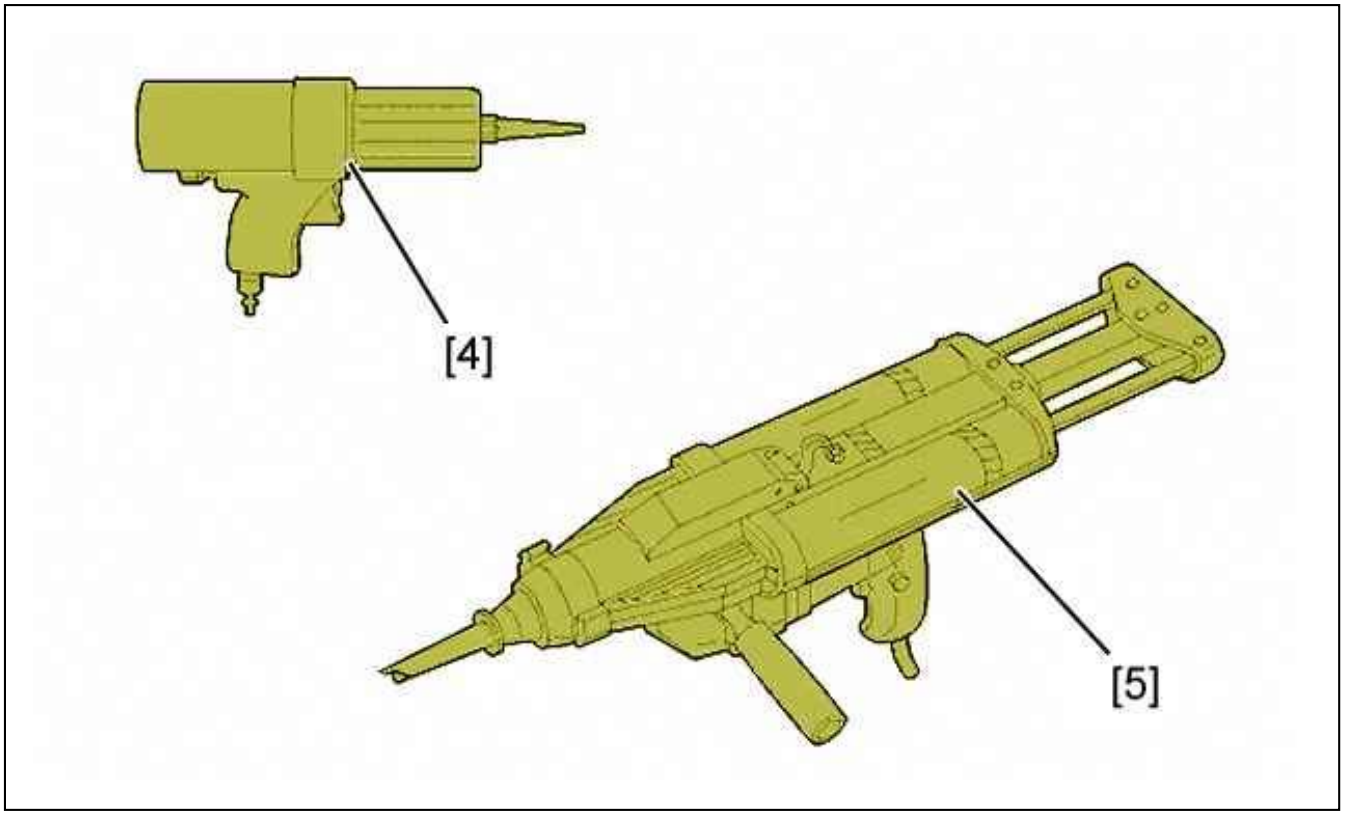

Figure : E5AP30AD

[4] Pneumatic gun (For one part cartridge).

[5] Electric gun (For two-part cartridge).

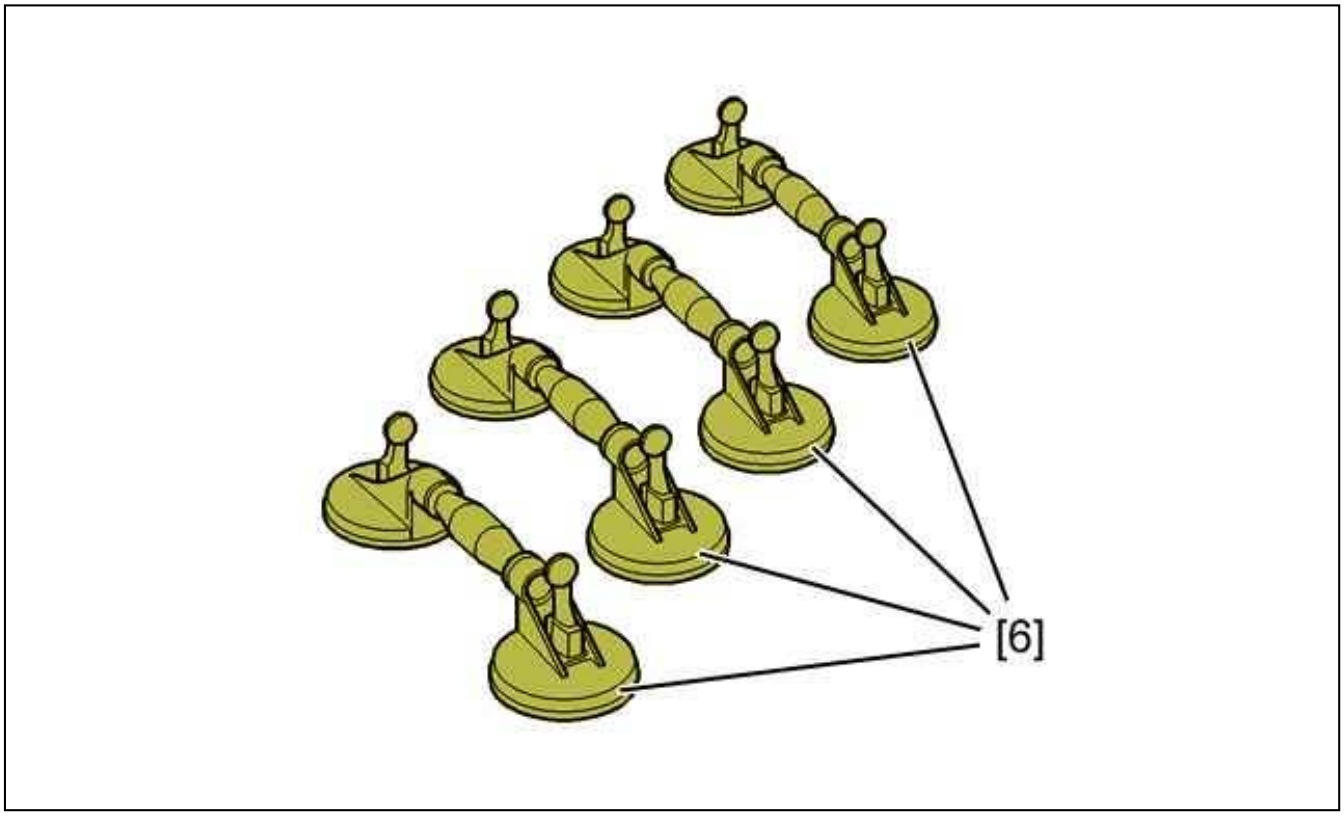

Figure : E5AP2ZTD

[6] Articulated suction pads (Reference P.R9776.Y0).

2. Removing

2.1. Mobile glass

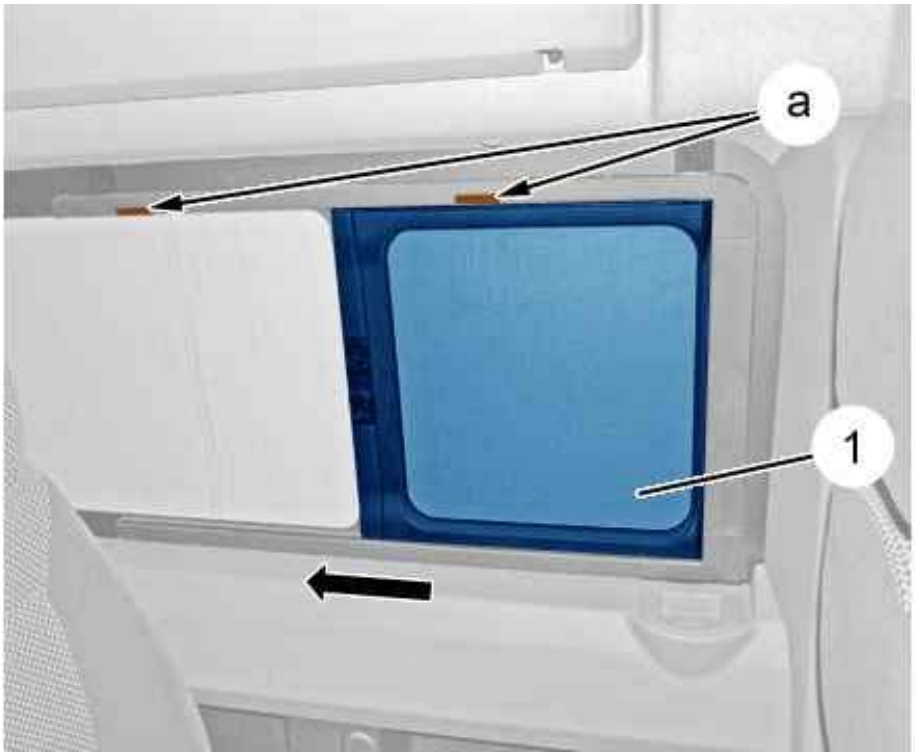

Figure : C5CM01YD

Withdraw the trim covers (at "a").
Open : The wind-down (1) (following the arrow).

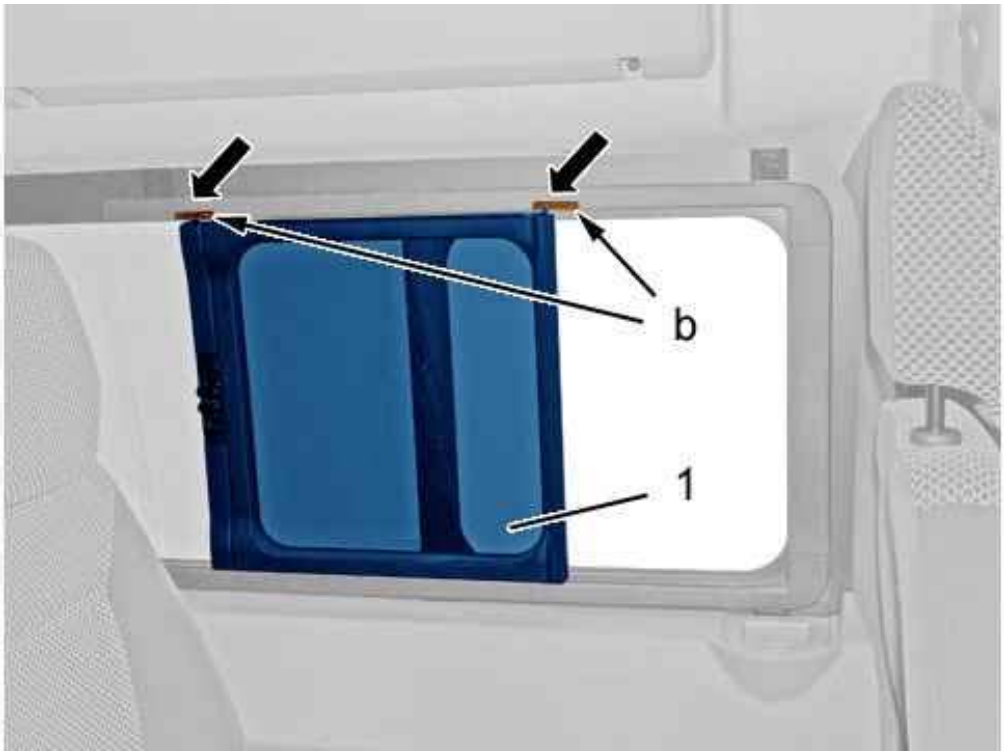

Figure : C5CM01ZD

Detach the moving window (1) through the openings(at "b").

Remove : The wind-down (1) (as per arrows).

2.2. Fixed glass

Remove the headlining (left hand part).

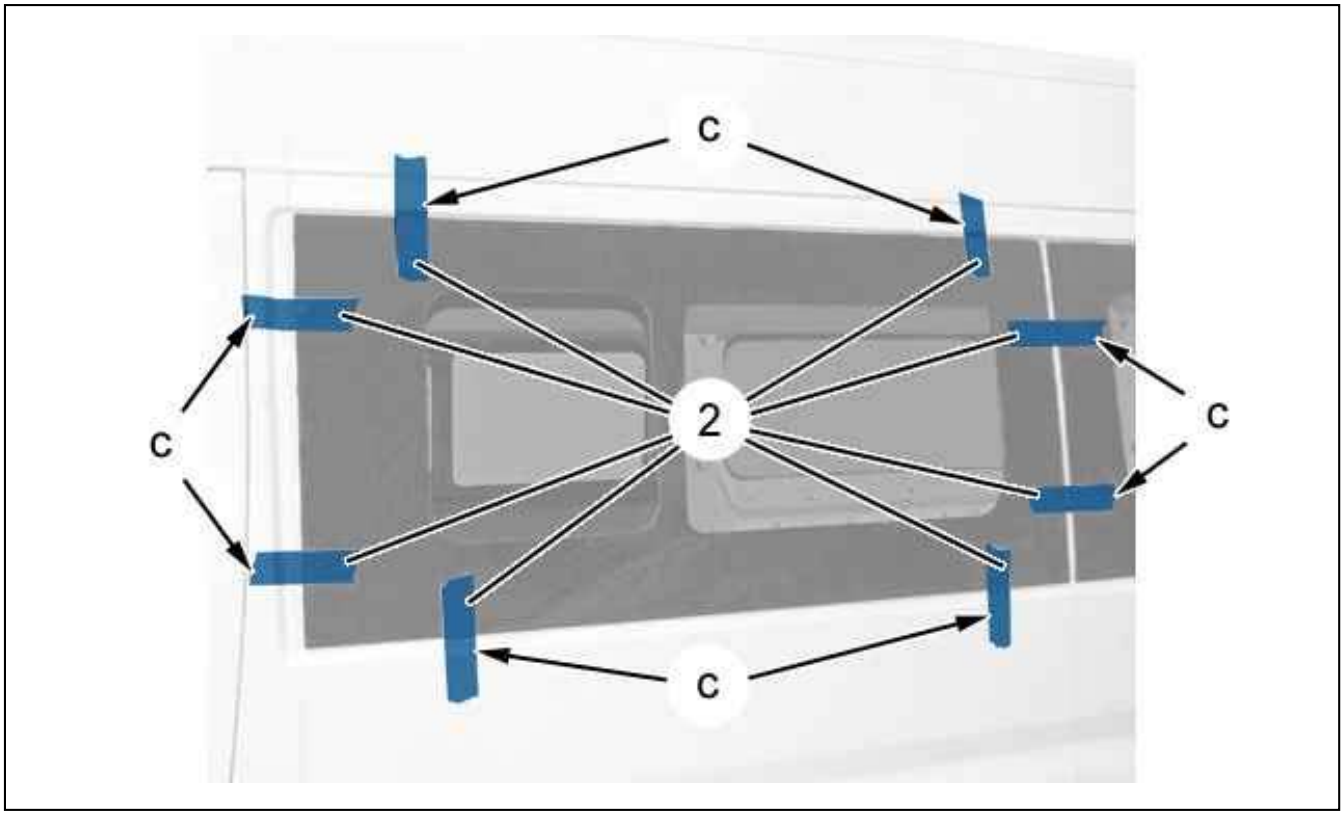

Figure : C5CM020D

N.B. : If the window is to be reused, align it and affix adhesive tape (2)(at "c").

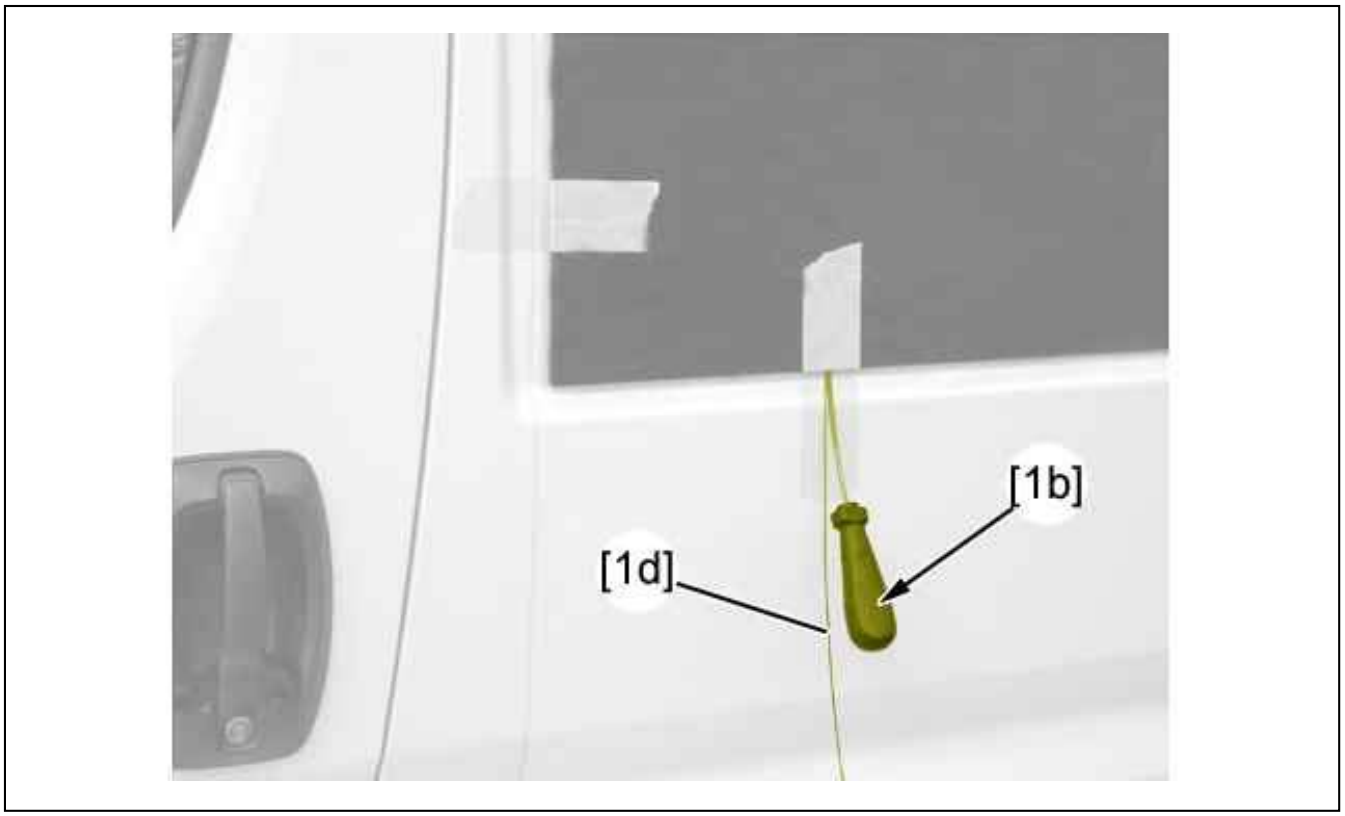

Figure : C5CM021D

Pass the awl [1b] through the bead of sealing adhesive, from the inside towards the outside.
Attach the cutting wire [1d] to the awl [1b].
Pass the cutting wire [1d] inside the vehicle.
Leave a sufficient length to permit fixing of the handles [1e].
Install the handles [1e] at each end of the cutting wire [1d].

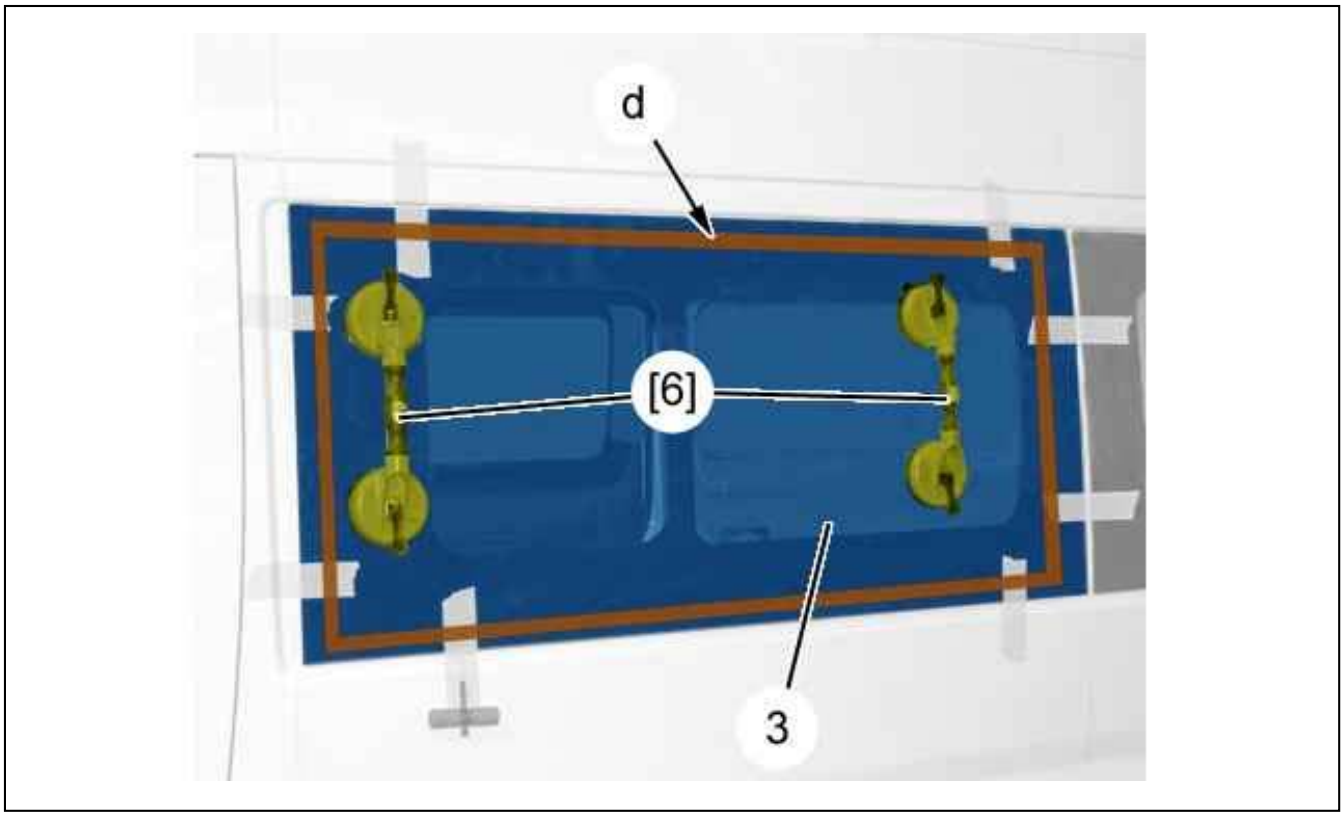

Figure : C5CM022D

Position : The double articulated suction pads [6].

CAUTION : Two people are required to perform the following operation.

The indexing pins must be cut.
Cut the sealing adhesive (at "d").

N.B. : At the slightest resistance of the wire while cutting, slacken it and assist it in passing the obstacle (Suppor shims, excessive thickness of the bead of adhesive or join between panels).

Remove : The side panel window (3) ; Using the double hinged suction cups [6].

3. Cleaning

3.1. Preparation : Side panel window

Reusing the glass :

- Fit the electric knife [2] with the blade [3]
- Remove the adhesive sealing bead
- Remove any dust using a clean cloth
- Only apply the primer to the zones laid bare

Fitting a new side panel window :

- Degrease the edge of the glass with the degreaser
- Apply the glass primer provided in the bonding kit part number "A3"

N.B. : Only apply the primer to the zones laid bare.

3.2. Preparation of the aperture

On the remains of the bead of sealing adhesive :

- Fit the electric knife [2] with the blade [3]
- Remove the adhesive sealing bead
- Remove any dust using a clean cloth

On the new component :

- Degrease the aperture
- Apply the metal primer provided in the bonding kit part number "A3"
- Allow to dry for 10 mn

4. Refitting

4.1. Reusing the side panel window

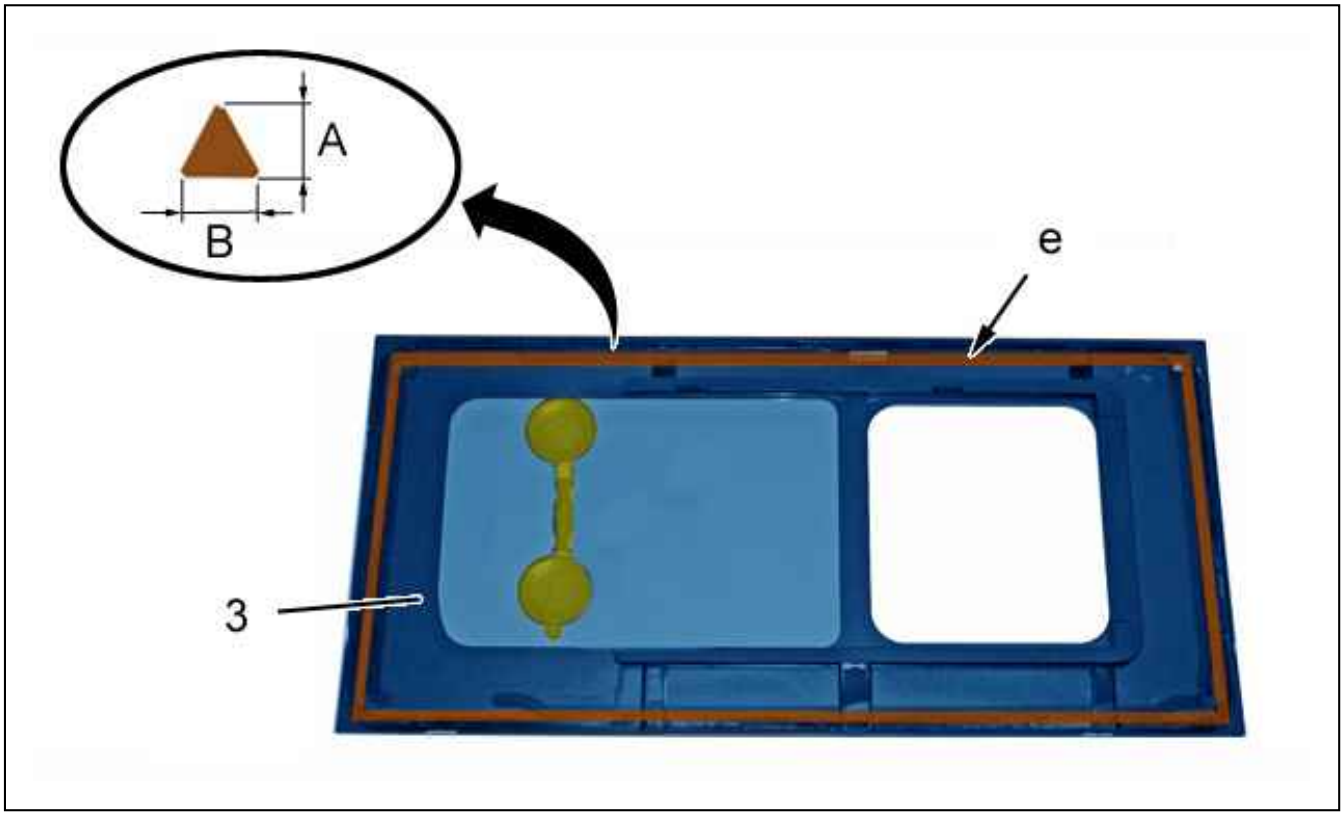

Figure : C5CM023D

"A" = 12 mm .
"B" = 8 mm .
Cut the nozzle in triangular section to obtain a bead of sealing adhesive "B" wide and "A" deep.

ESSENTIAL : Always replace : The faulty seals.

Apply the bead of adhesive sealant around the periphery of the glass (3) (at "e") (using tools [4] or [5]).

ESSENTIAL : Use of the two part product: the time for fitting the window on the vehicle and the start of extrusion of the sealing adhesive is 5 minutes.

Refit : The side panel window :

- Using the double hinged suction cups [6]

- Using adhesive tapes (2)

Press gently on the periphery of the side panel window(3).
Clean the side panel window and its periphery.

4.2. Fitting a new side panel window

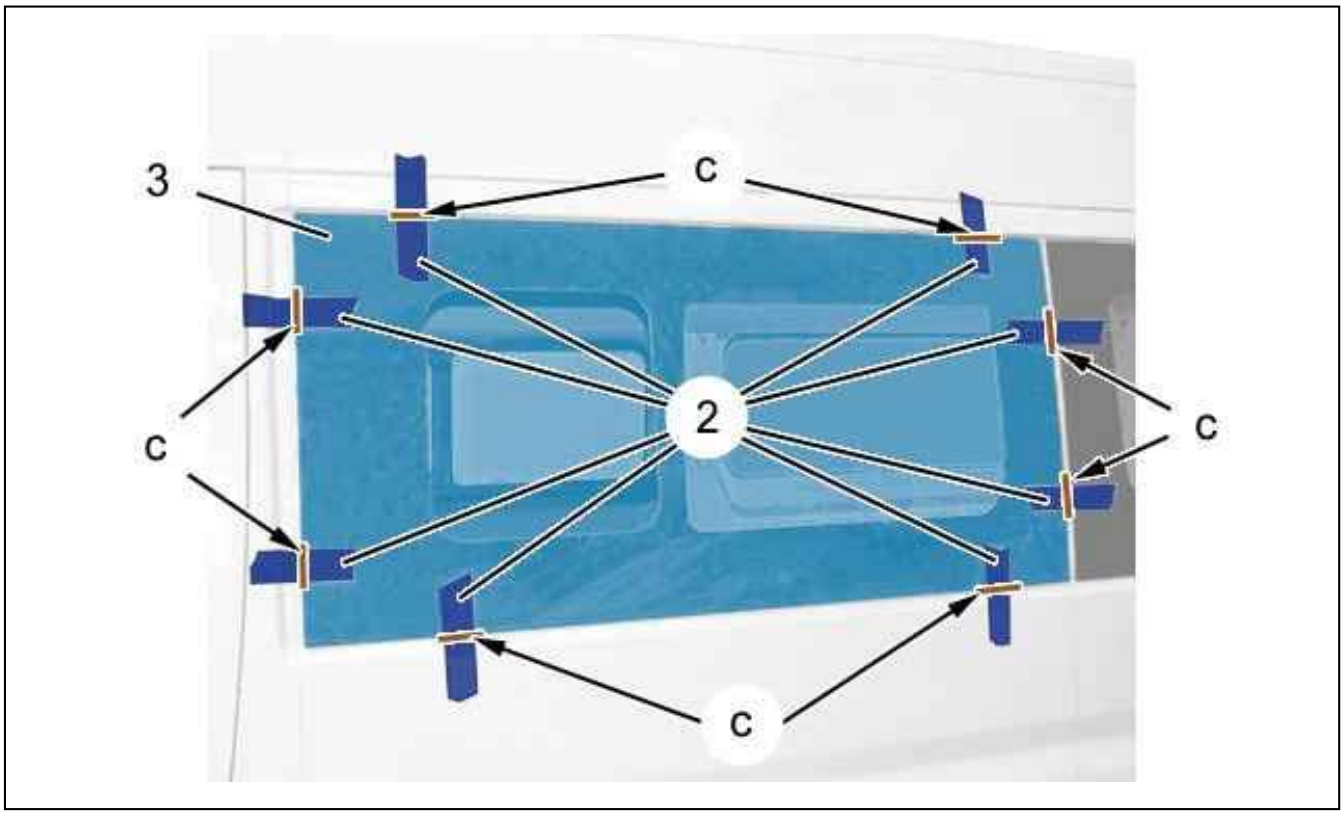

Figure : C5CM024D

Test fit the side panel window (3).
Position the adhesive strips (2).
Cut the tape (at "c").
Remove : The side panel window (3).
Apply the bead of adhesive sealant around the periphery of the glass (3) (at "d") (using tools [4] or [5]).

ESSENTIAL : Use of the two part product: the time for fitting the window on the vehicle and the start of extrusion of the sealing adhesive is 5 minutes.

Refit : The side panel window :

- Using the double hinged suction cups [6]
- Using adhesive tapes (2)

Press gently on the periphery of the side panel window (3).
Clean the side panel window and its periphery.

ESSENTIAL : Observe the vehicle immobilisation time following fitting of the windscreen recommended by the suppliers of the products used.

Fit : The wind-down (Proceed in the reverse order to removal).
Continue the fitting operations in the reverse order to removal.
Check the sealing of the side panel window (3).

Clean the side panel window and its periphery.

REMOVING - REFITTING : ANCILLARY DRIVE BELT

ESSENTIAL : Observe the safety and cleanliness recommendations .

1. Tooling

tool	Reference	Designation
 Figure : E5AB153T	[0198-P]	flywheel stop
 Figure : E5AB154T	[0198-E]	Centraliser x2
	[0198-M1]	Crankshaft drive tool
	[0198-M2]	Crankshaft drive tool bolt

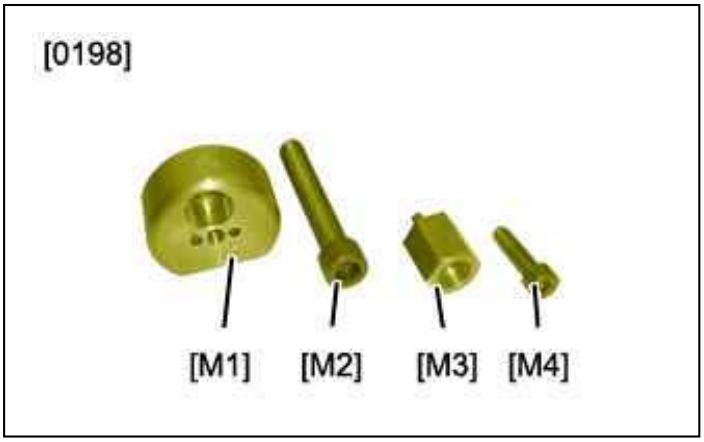 Figure : E5AB0LTT	[0198-M3]	Crankshaft driver
	[0198-M4]	Crankshaft drive tool bolt
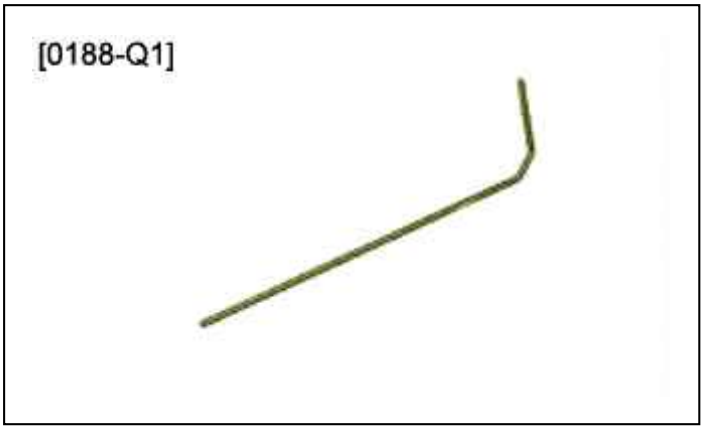 Figure : E5AB05JT	[0188-Q1]	Dynamic roller tensioner pins
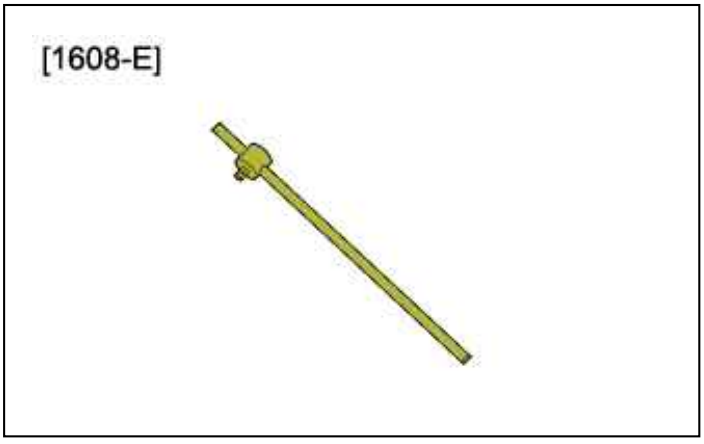 Figure : E5AB0C9T	[1608-E]	T piece extension

2. Removing

2.1. Common operations

CAUTION : Replace the torsional vibration damper double pulley for a distance travelled greater than or equal to 160000 km, when the accessories drive belt is replaced.

Place the vehicle on a 2-post lift.
Disconnect the battery negative terminal.
Remove :

- The protection plates under the engine
- The front right wheel

CAUTION : Prior to removal, and before any subsequent refitting of the ancillary drive belt that has been removed, it is compulsory for the engine to be at ambient temperature (Below 30 °C). In all other cases, replace the ancillary drive belt.

N.B. : Removing it with the engine hot causes irreversible and invisible damage to the ancillary drive belt.

CAUTION : If replacing it, cut and remove the ancillary drive belt.

CAUTION : Check that the tool [0198-P] is correctly positioned between two teeth of the flywheel; or turn the crankshaft to correctly position the tool.

Move aside and secure : The starter motor .

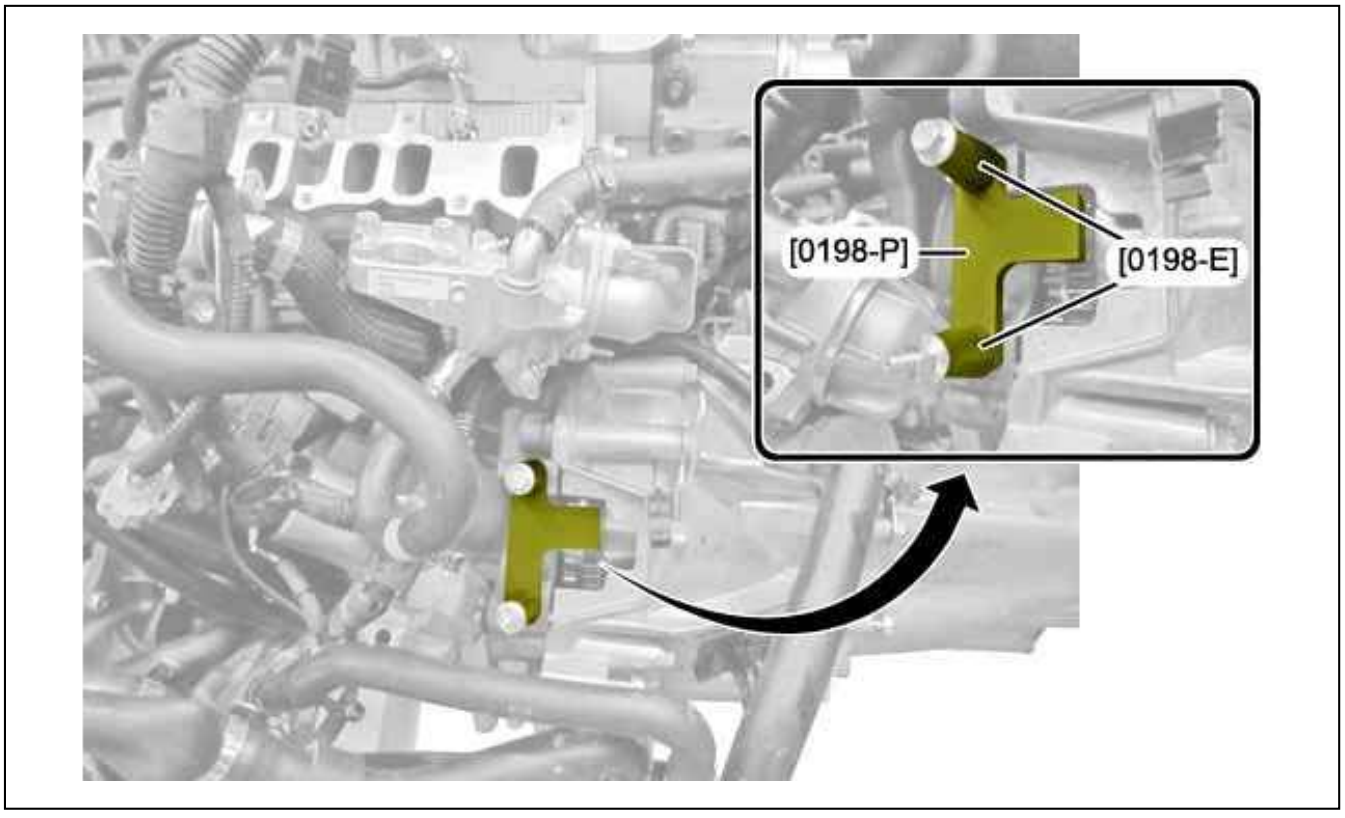

Figure : B1BG2YHD

Position the tools [0198-P], [0198-E].
Secure the assembly using the starter motor bolts.

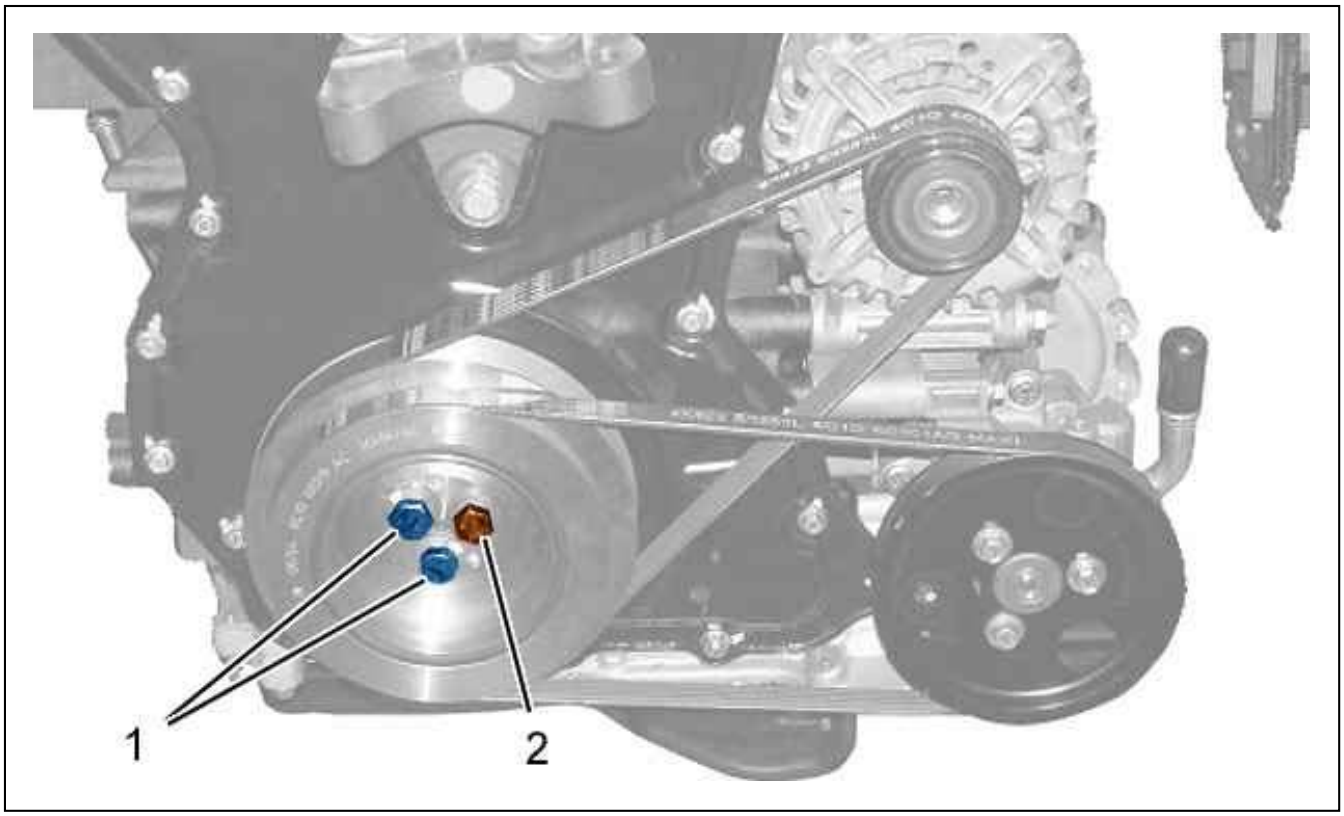

Figure : B1BPSHAD

Remove the accessories drive pulley fixing bolts (1).
Slacken the fixing bolt (2) of the ancillary drive pulley by 2 cm.

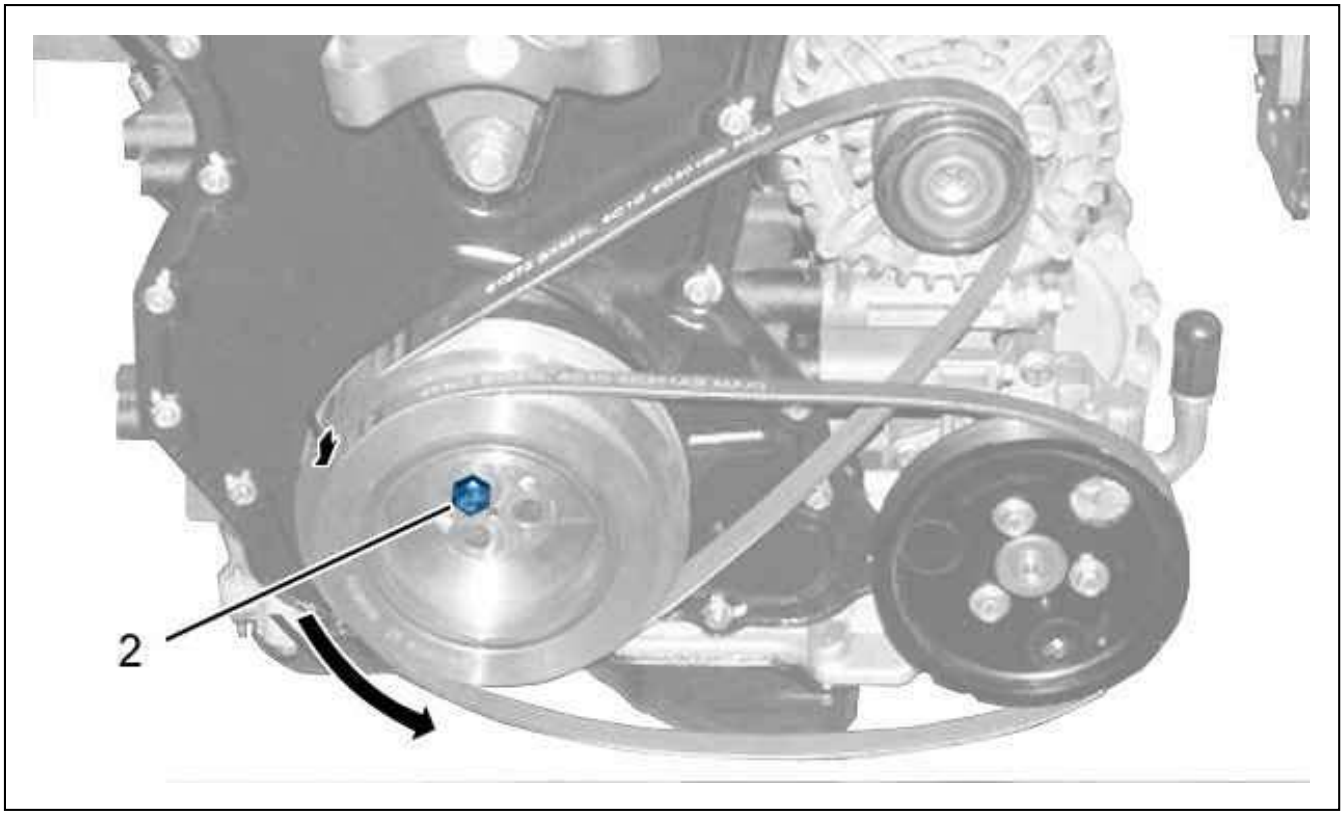

Figure : B1BPSHBD

Move aside the ancillary drive pulley, pivoting it on the fixing bolt (2).

CAUTION : Mark the direction of fitting of the accessories drive belts if they are to be reused.

Remove the accessory drive belts.

2.2. Vehicle with air conditioning

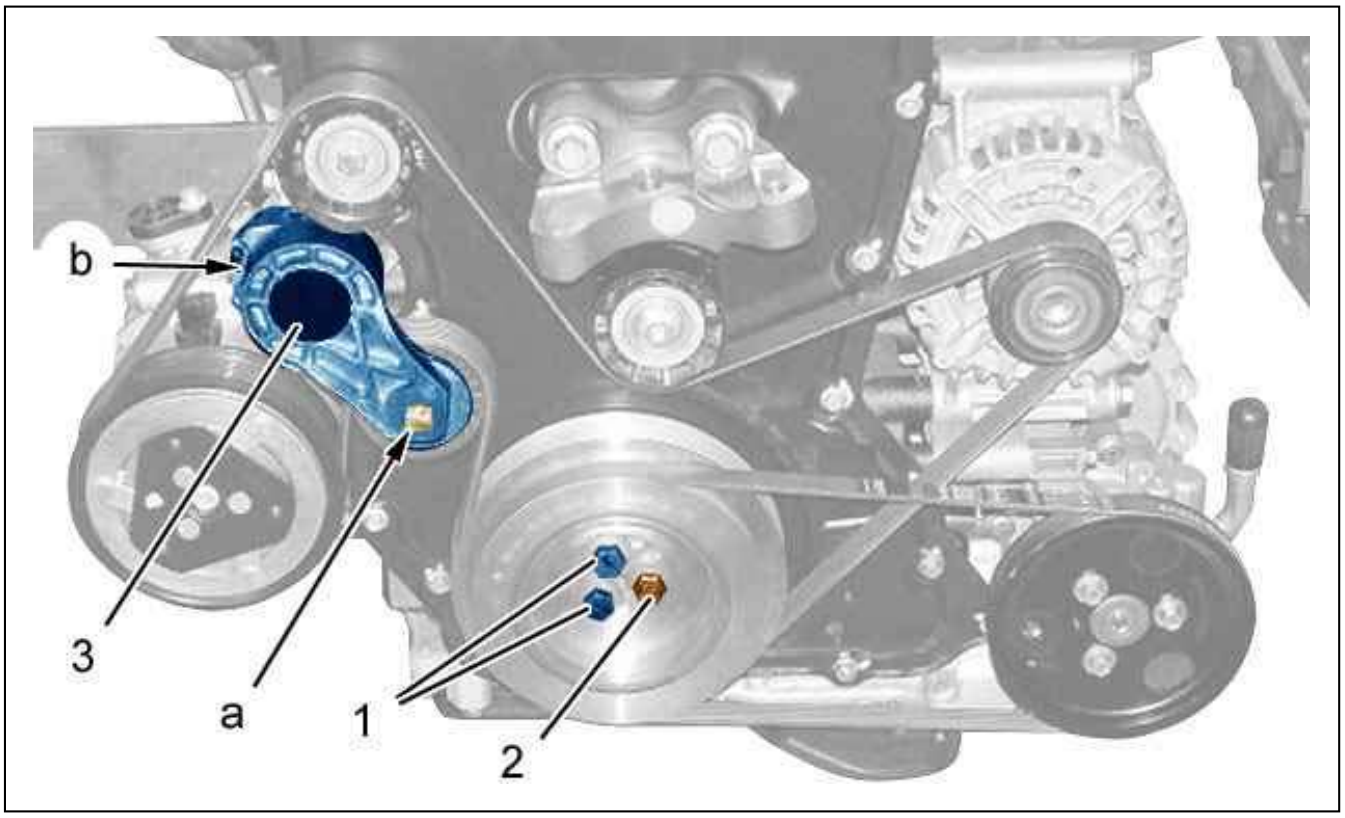

Figure : B1BPSHCD

Compress the dynamic roller tensioner (3) (as "a") (anti clockwise) ; Using tool [1608-E].
Peg (as "b") ; Using tool [0188-Q1].
Remove the accessories drive pulley fixing bolts (1).
Slacken the fixing bolt (2) of the ancillary drive pulley by 2 cm.

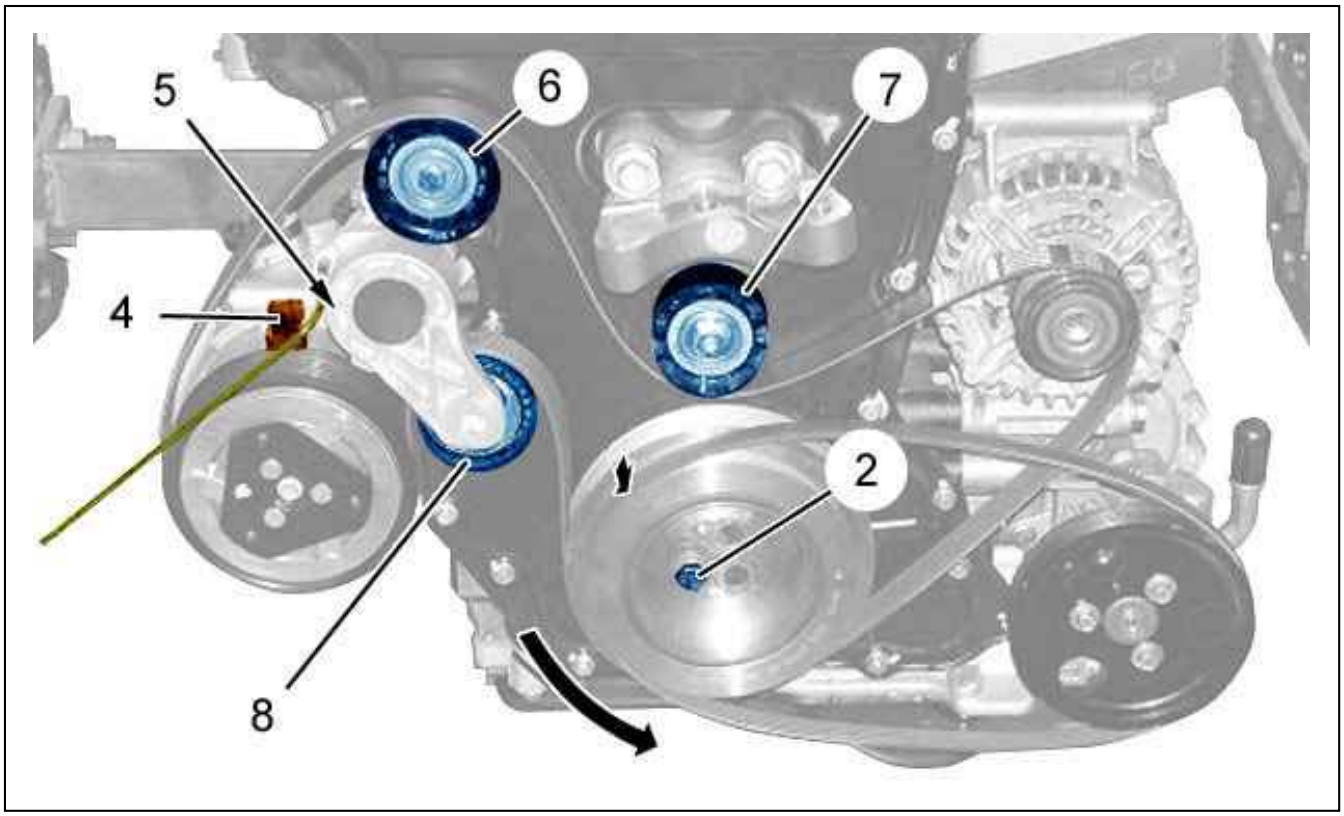

Figure : B1BPSHDD

CAUTION : Mark the direction of fitting of the accessories drive belts if they are to be reused.

Move aside the ancillary drive pulley, pivoting it on the fixing bolt (2).
Disconnect the air conditioning compressor connector (4); By means of a screwdriver.
Remove :

- The dynamic roller tensioner (3) fixing bolts (5)
- The dynamic roller tensioner (3)

CAUTION : Check that the rollers (6),(7) and (8) rotate freely (no play and no stiffness).

Remove the accessory drive belts.

3. Refitting

CAUTION : Adhere to the tightening torques .

CAUTION : Replace the torsional vibration damper double pulley for a distance travelled greater than or equal to 160000 km, when the accessories drive belt is replaced.

3.1. Vehicle with air conditioning

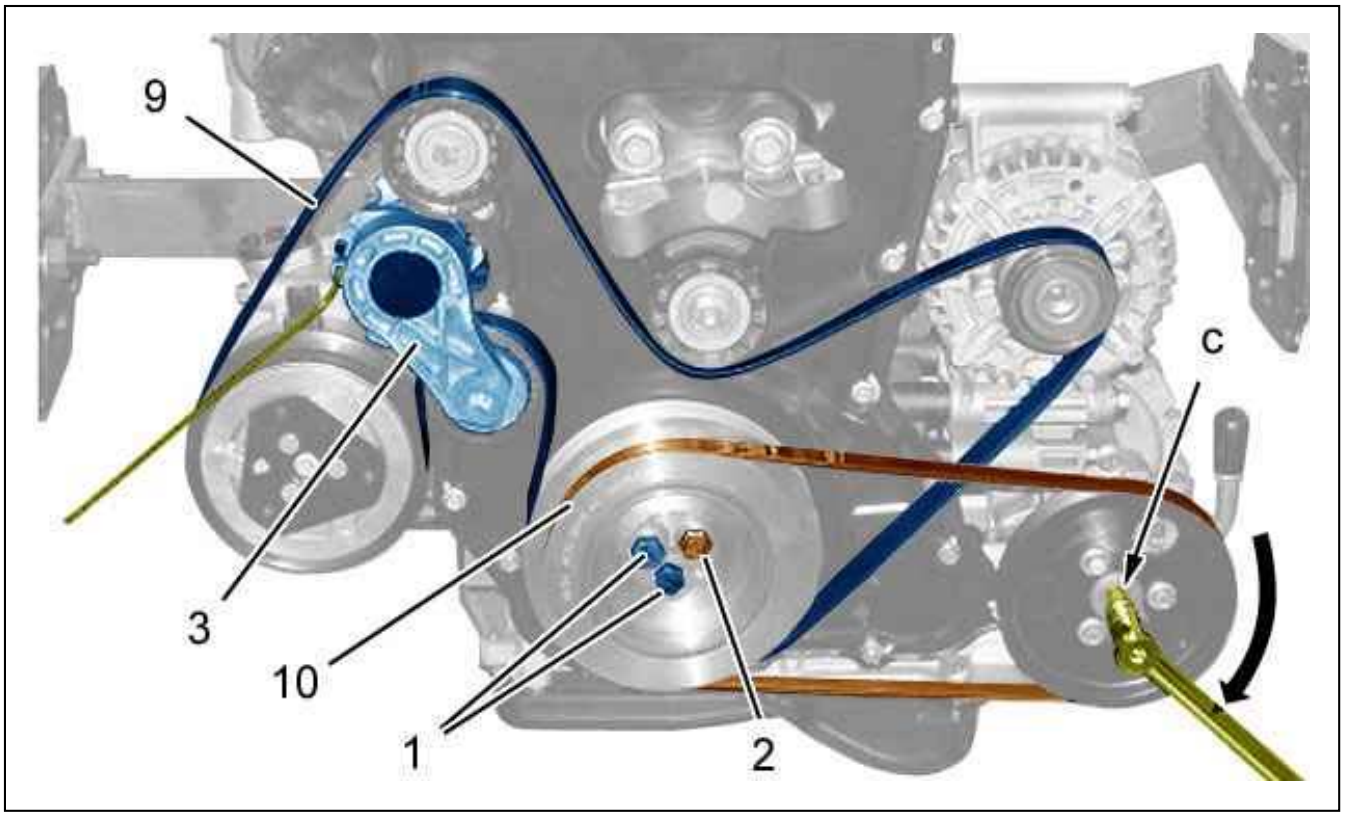

Figure : B1BPSHFD

CAUTION : Mark the direction of fitting of the accessories drive belts if they are to be reused.

CAUTION : Make sure that the ancillary drive belts (9) and (10) are correctly positioned in the grooves of the various ancillary drive pulleys.

Refit :

- The accessories drive belt (9) with the dynamic roller tensioner (3)
- The dynamic roller tensioner (3) fixing bolts (5)
- The accessories drive belt (10)

Turn the power steering pump pulley ; Using a spanner (as "c") (In the direction of the arrow).
Guide the accessories drive pulley by hand.
Maintain the effort (as "c") (In the direction of the arrow).
Refit the fixing screws (1).
Tighten the fixing bolts (1), (2) to the correct torque.
Remove the spanner (as "c").

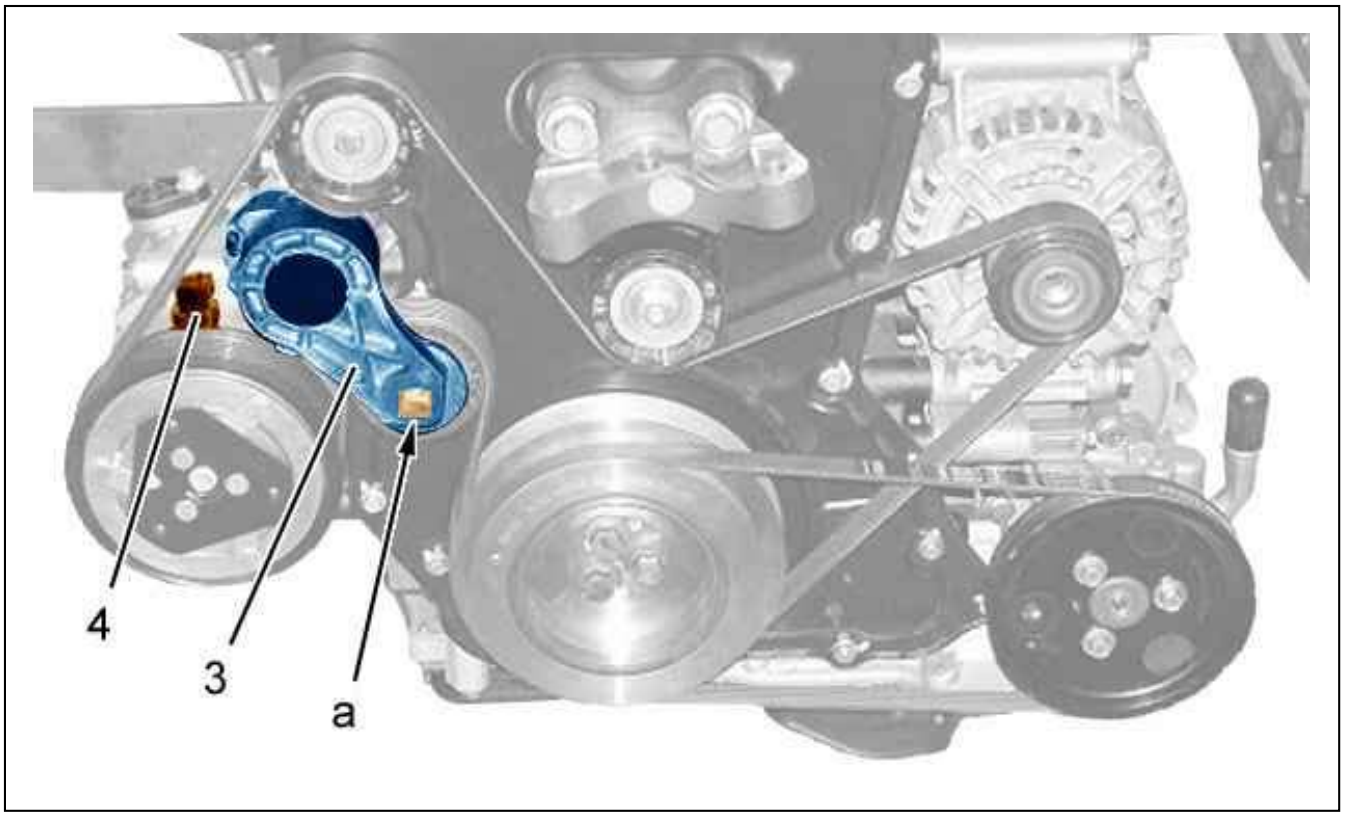

Figure : B1BPSHGD

Compress the dynamic roller tensioner (3) (as "a") (anti clockwise) ; Using tool [1608-E].
Remove the tool [0188-Q1].
Connect the air conditioning compressor connector (4).

3.2. Common operations

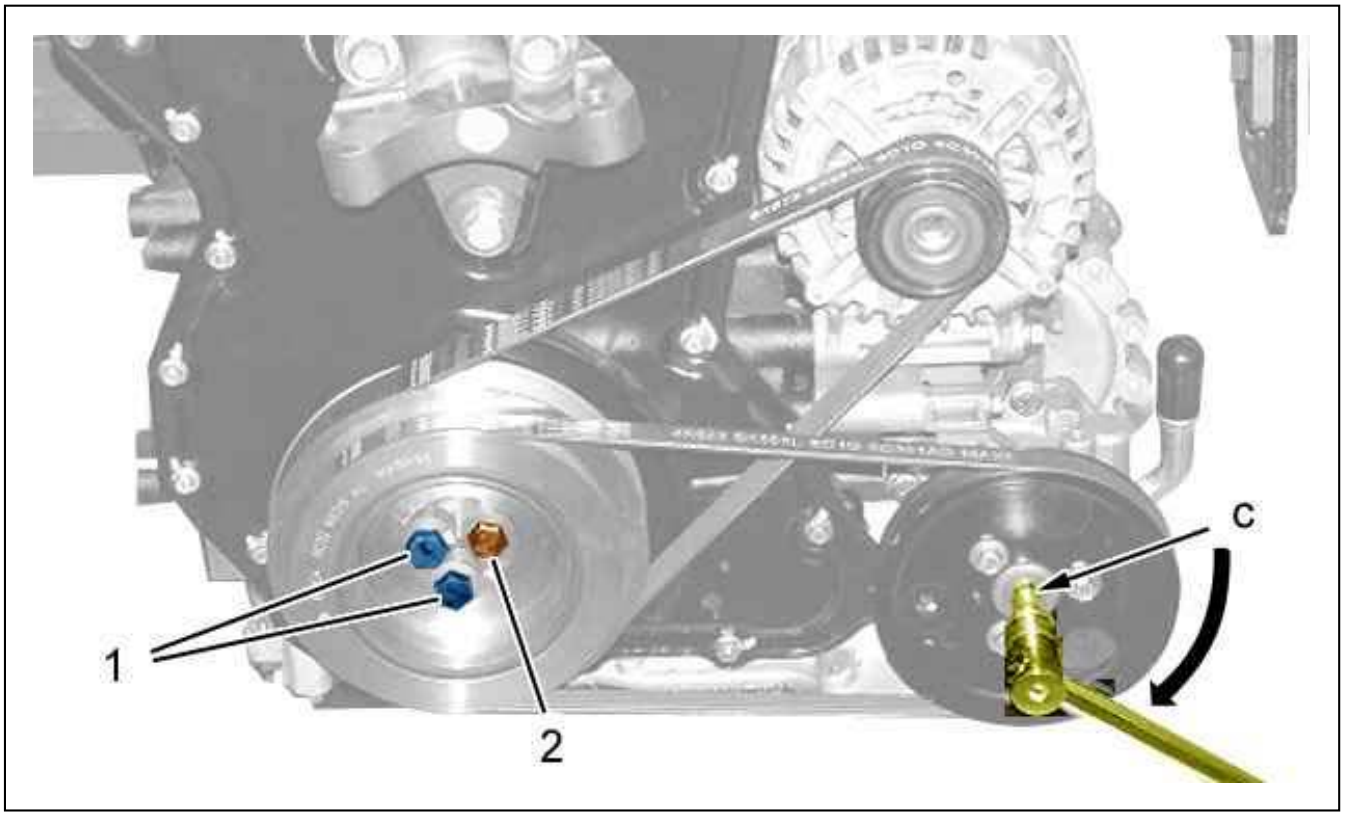

Figure : B1BPSHED

CAUTION : Mark the direction of fitting of the accessories drive belts if they are to be reused.

CAUTION : Always make sure that the ancillary drive belts are correctly positioned in the grooves of the various ancillary drive pulleys.

Refit the accessories drive belts .
Turn the power steering pump pulley ; Using a spanner (as "c") (In the direction of the arrow).
Guide the accessories drive pulley by hand.
Maintain the effort (as "c") (In the direction of the arrow).
Refit the fixing screws (1).
Tighten the fixing bolts (1), (2) to the correct torque.
Remove the spanner (as "c").
Remove the tools [0198-P], [0198-E].
Refit the starter .

4. Verification

Remove one accessories drive pulley fixing bolt .
Set the gearbox in neutral.

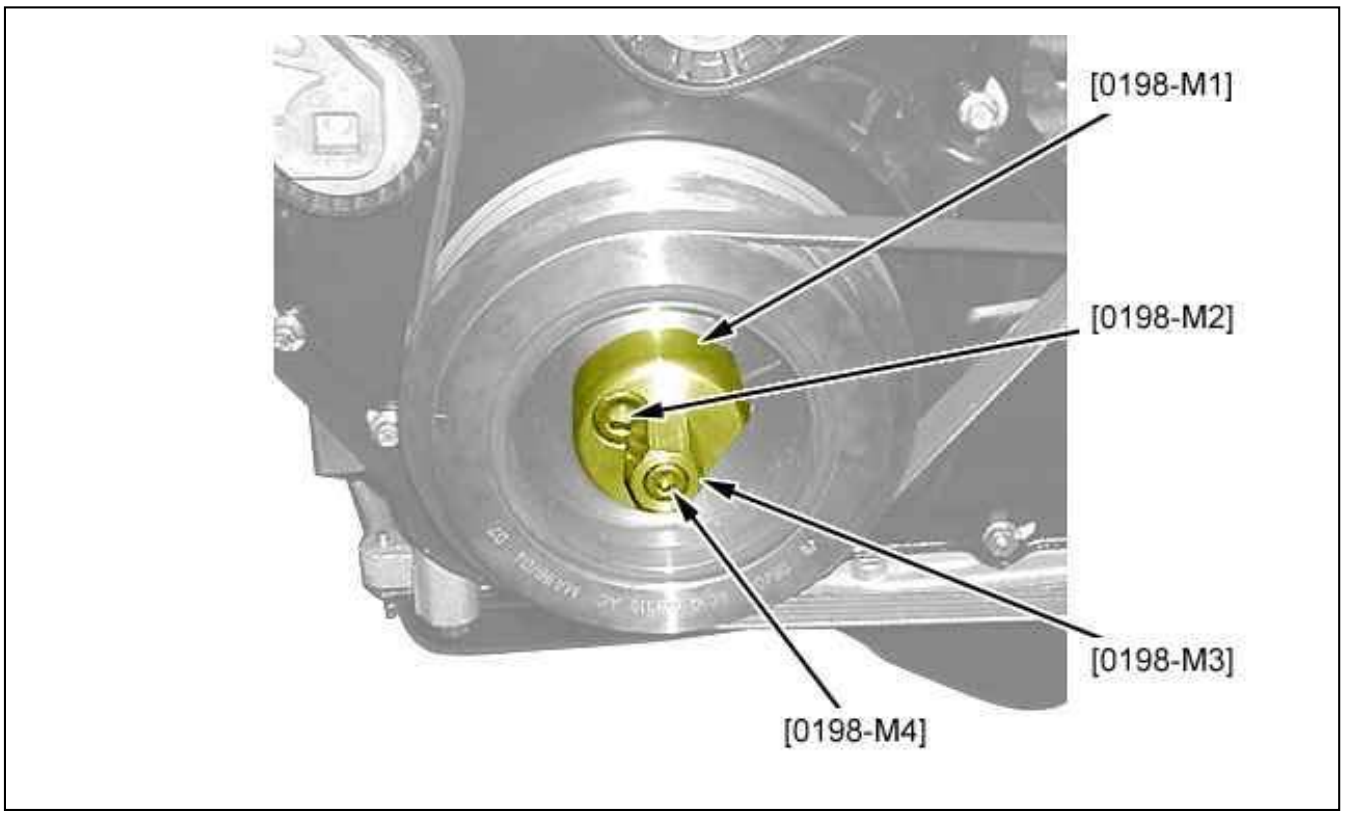

Figure : B1BG1DUD

Fit the tool [0198-M1].
Secure the tool [0198-M1] ; Using the screws [0198-M2].
Fit the tool [0198-M3].
Tighten the bolt [0198-M4] .
Rotate the crankshaft clockwise ; Check that the accessories drive pulley is not warped.
Engage 1st gear.
Remove the tools [0198].

Refit the fixing bolt of the ancillary drive pulley ; Tighten to the specified torque.
Refit :

- The protection plates under the engine
- The front right wheel

CAUTION : Perform the operations to be carried out following reconnection of the battery.

Reconnect the battery negative terminal.

TIGHTENING TORQUES : POWER ASSISTED STEERING

1. Steering column

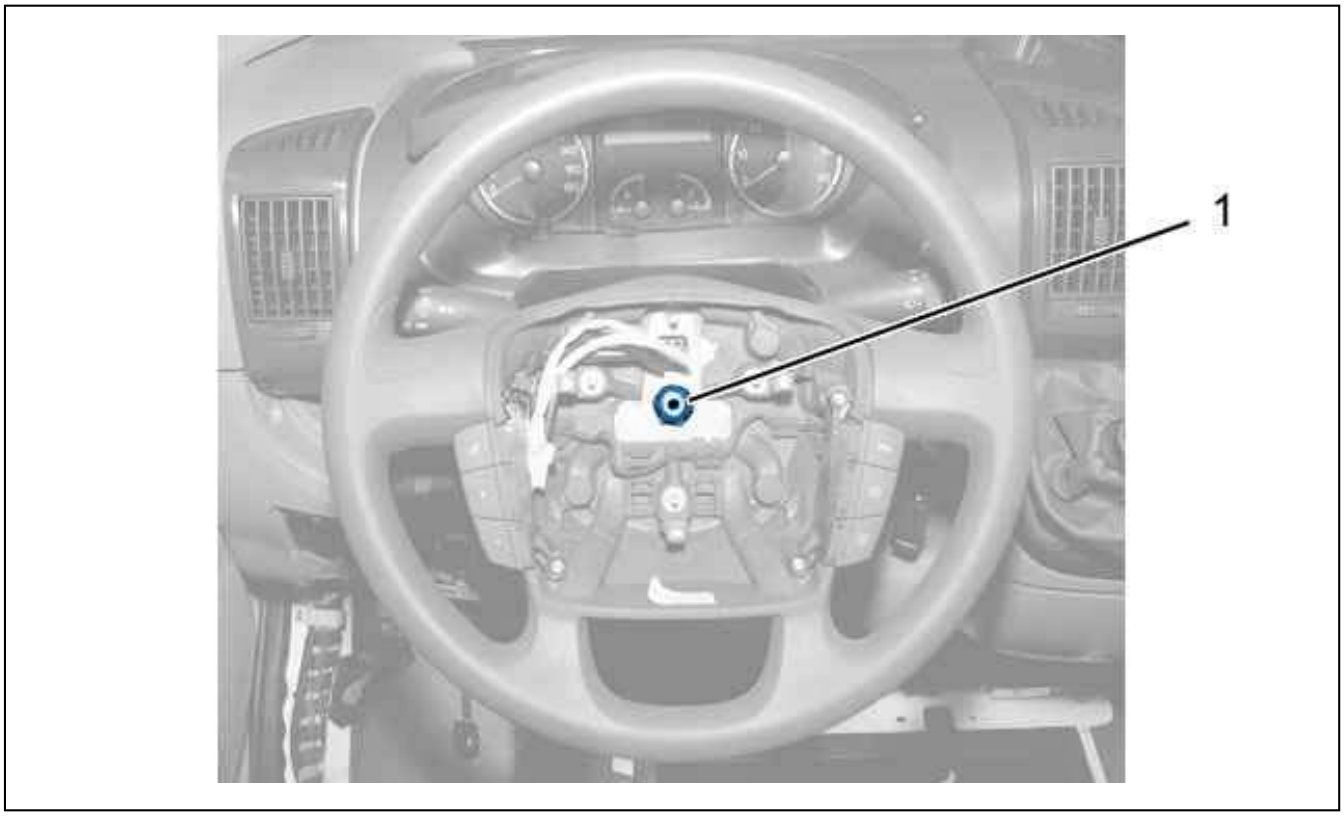

Figure : C5FP11JD

Reference	Designation	Tightening torque
(1)	nut - Steering wheel	5 daNm

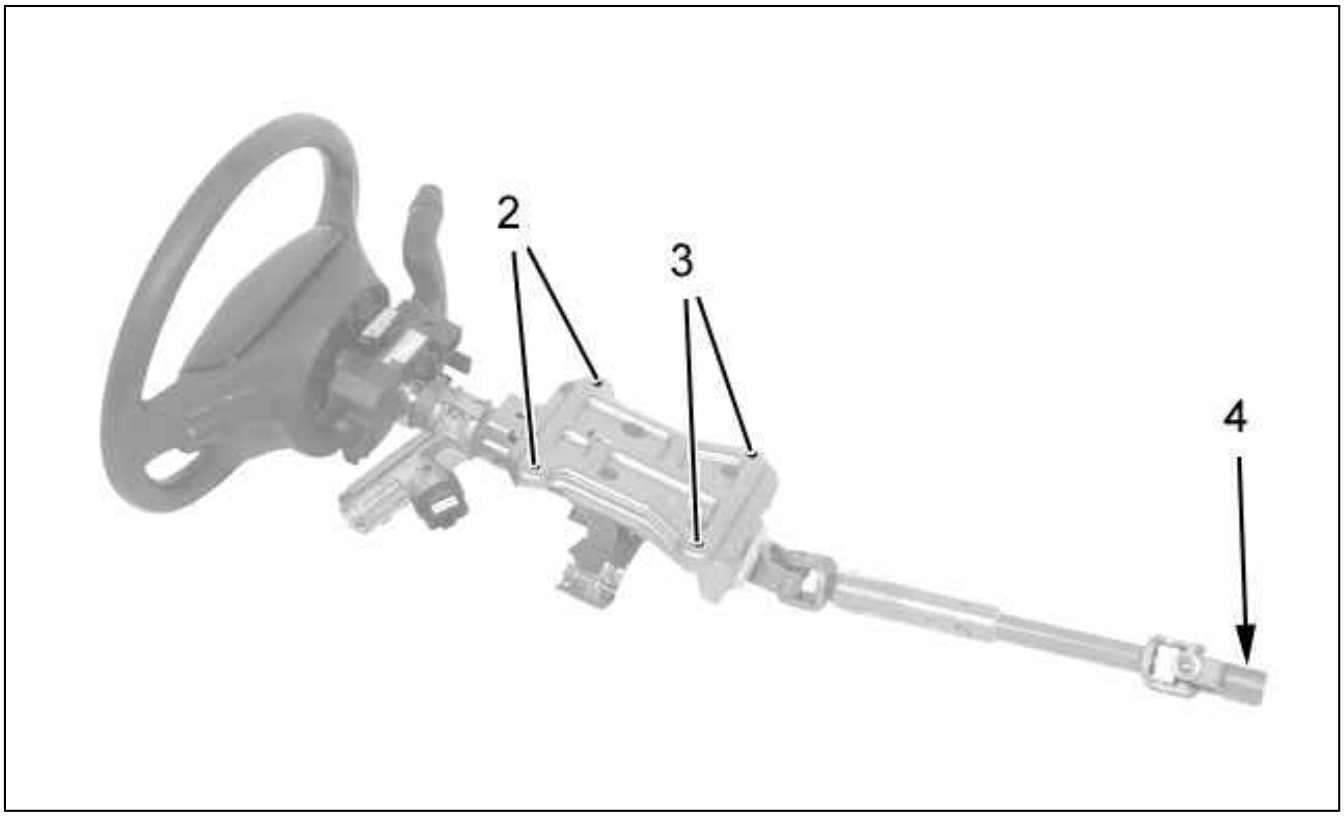

Figure : B3EP197D

Reference	Designation	Tightening torque
(2)	bolts - Steering column	1,5 daNm
(3)	nuts - Steering column	1,5 daNm
(4)	bolts - Steering universal joint	2,5 daNm

2. power-assisted steering pump

2.1. PUMA engine

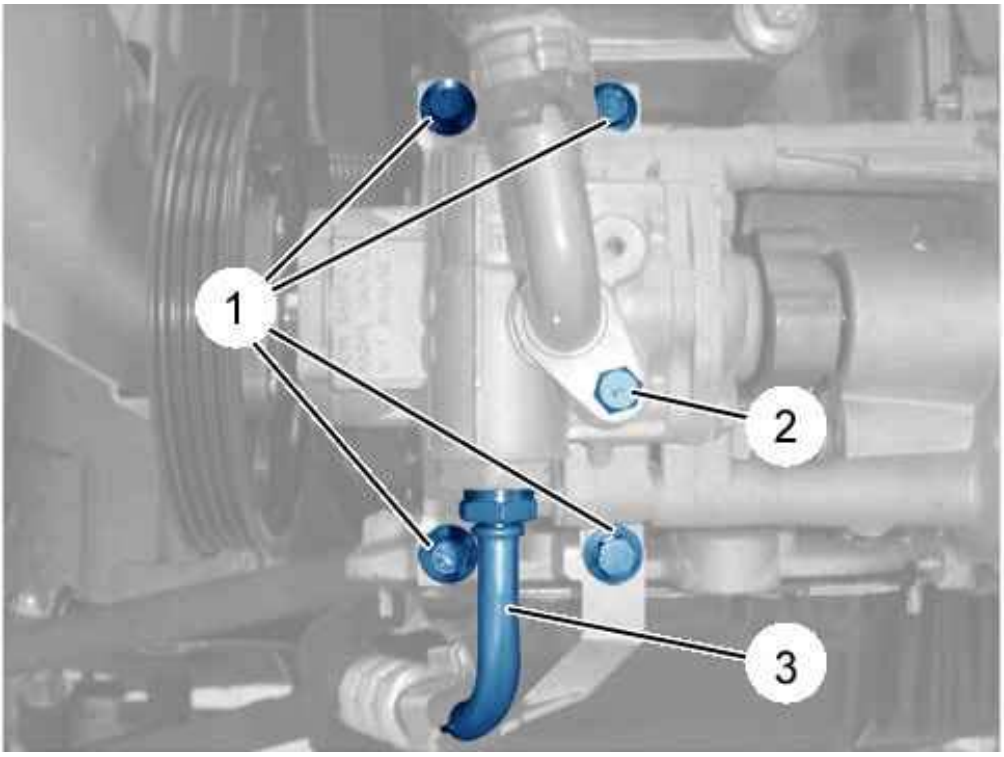

Figure : B3EB02MD

Reference	Designation	Tightening torque
(1)	bolts - power-assisted steering pump	2,2 daNm
(2)	bolts - Supply pipe	0,9 daNm
(3)	High pressure piping - power-assisted steering pump	2,7 daNm

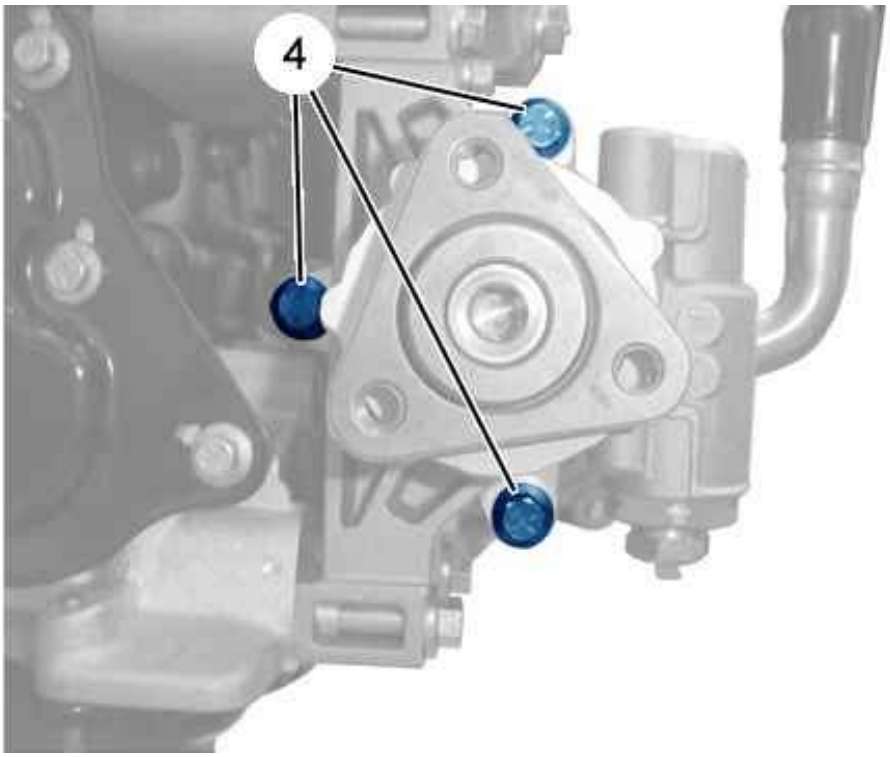

Figure : B3EB02PD

Reference	Designation	Tightening torque
(4)	bolts - power-assisted steering pump	2,2 daNm

2.2. SOFIM engine

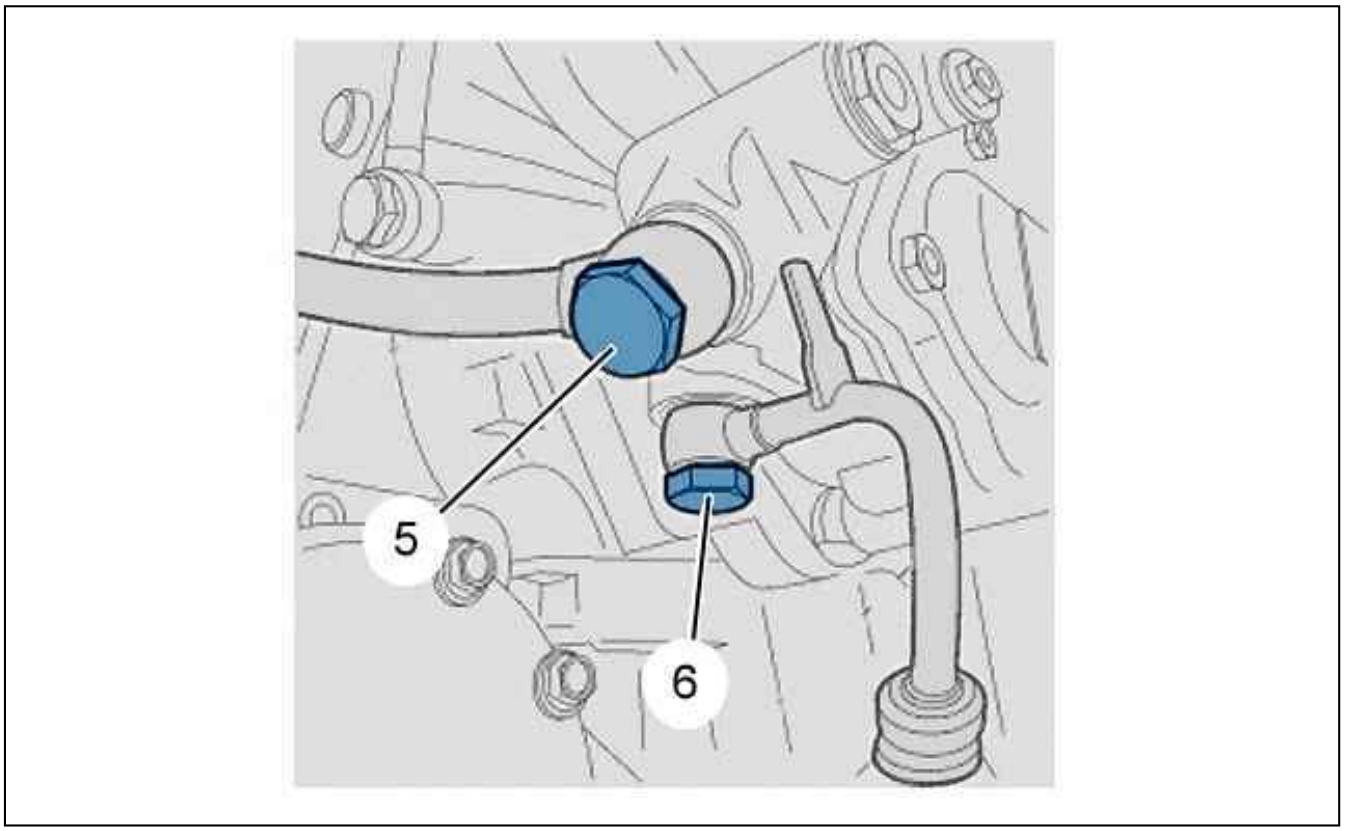

Figure : B3EB02SD

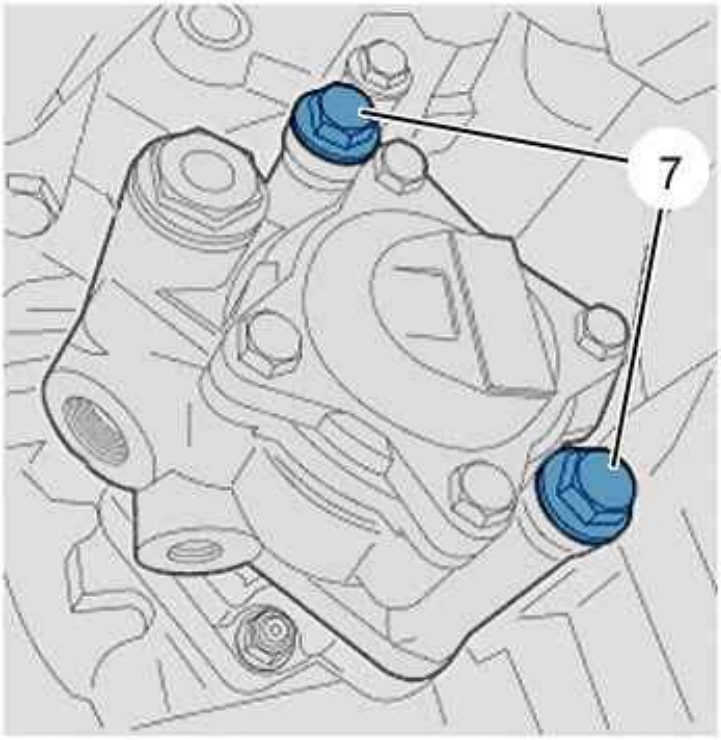

Figure : B3EB02TD

Reference	Designation	Tightening torque
(5)	Union	3,6 daNm
(6)	Union	3,6 daNm
(7)	bolts - power-assisted steering pump	4 daNm

3. Steering mechanism

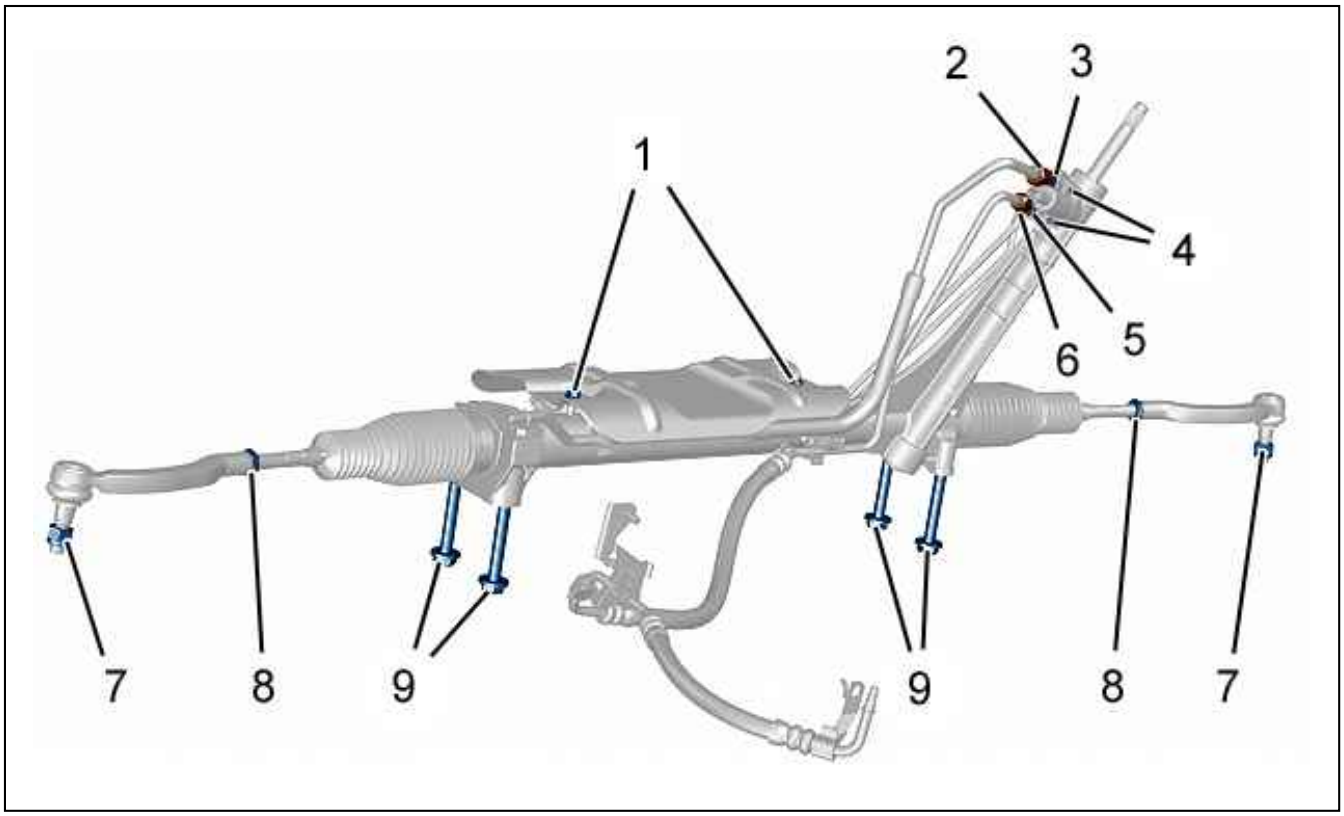

Figure : B3EB02UD

Reference	Designation	Tightening torque
(1)	nut - Heat shield	0,6 daNm
(2)	Low pressure piping - Low pressure union	6,3 daNm
(3)	Low pressure union - Valve	3,2 daNm
(4)	bolts - Power steering proportional electrovalve	2,8 daNm
(5)	High pressure union - Valve	2,8 daNm
(6)	High pressure piping - High pressure union	5,5 daNm
(7)	nut - Steering ball joint on front hub carrier	8 daNm
(8)	Locknut for adjusting the steering track rods	7 daNm
(9)	bolts - Steering mechanism	11 daNm

TIMING : STRAIGHT-ON POSITION OF STEERING RACK

ESSENTIAL : Respect the precautions to be taken before repair.

1. Recommended tools

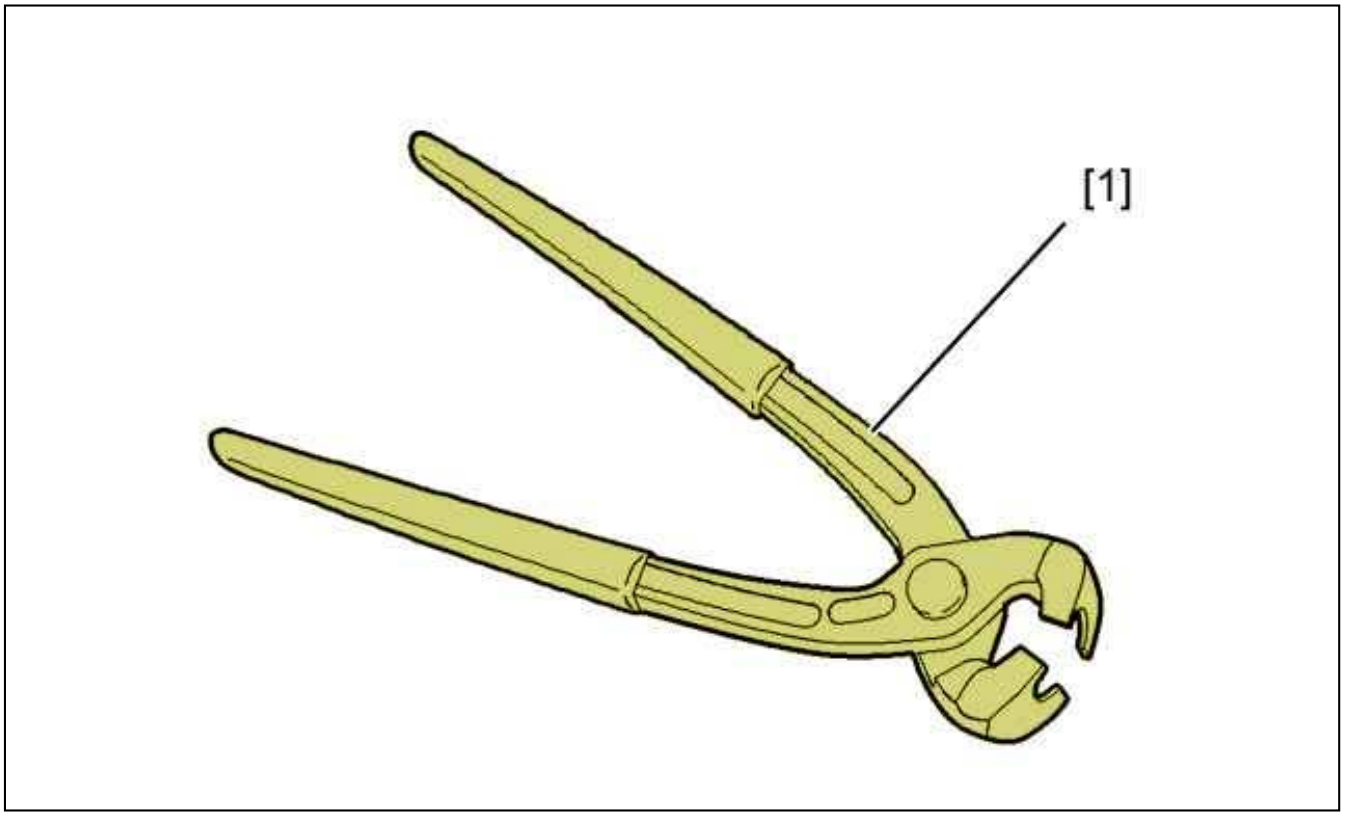

Figure : E5AP2XQD

[1] OETIKER clip pliers (-).1615.

2. Preliminary operations

Release the front wheel bolts.
Lift and support the vehicle with front wheels suspended.
Remove the front wheels.

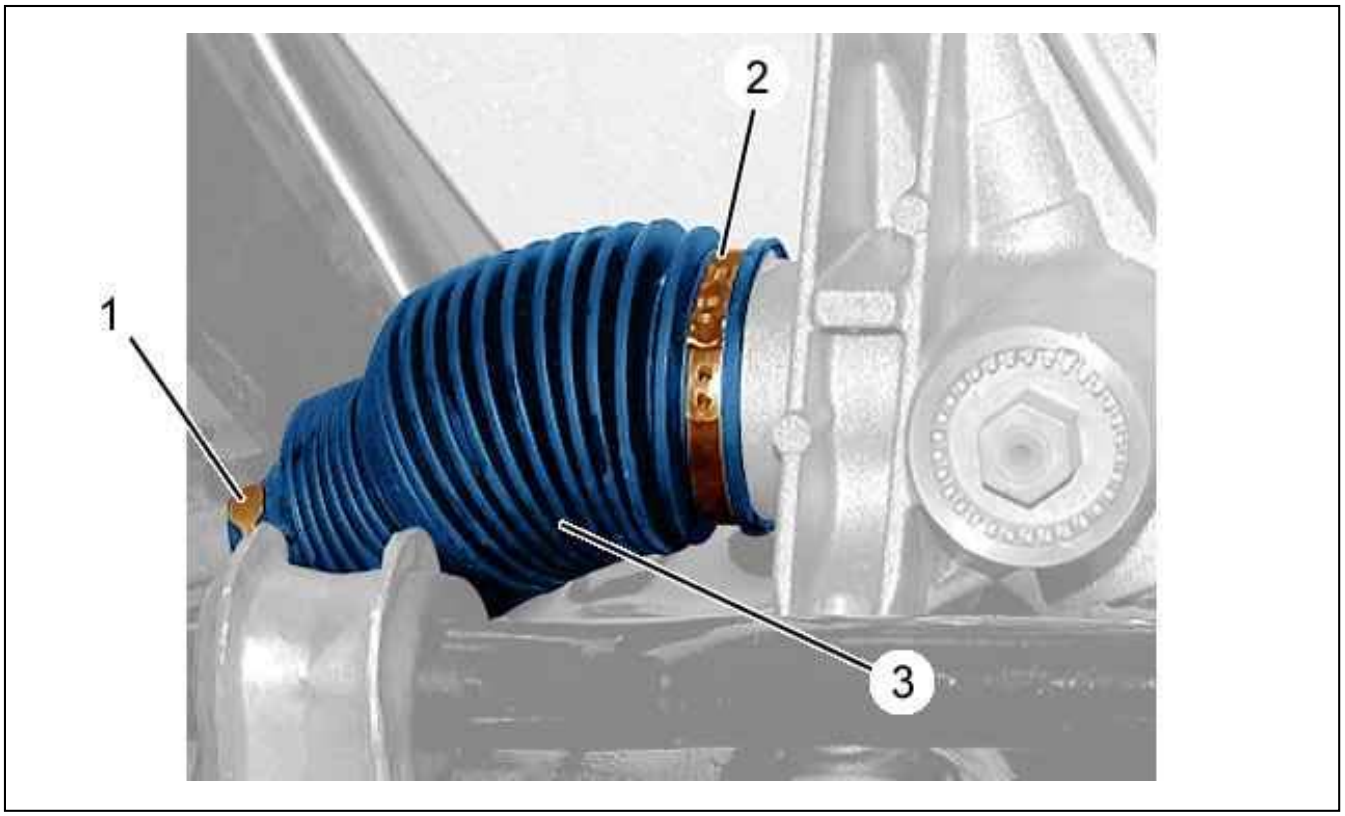

Figure : B3EP18GD

Remove (left side) :

- The clip (1)
- The clip (2)

Remove the steering rack protection gaiter (3).

3. Timing

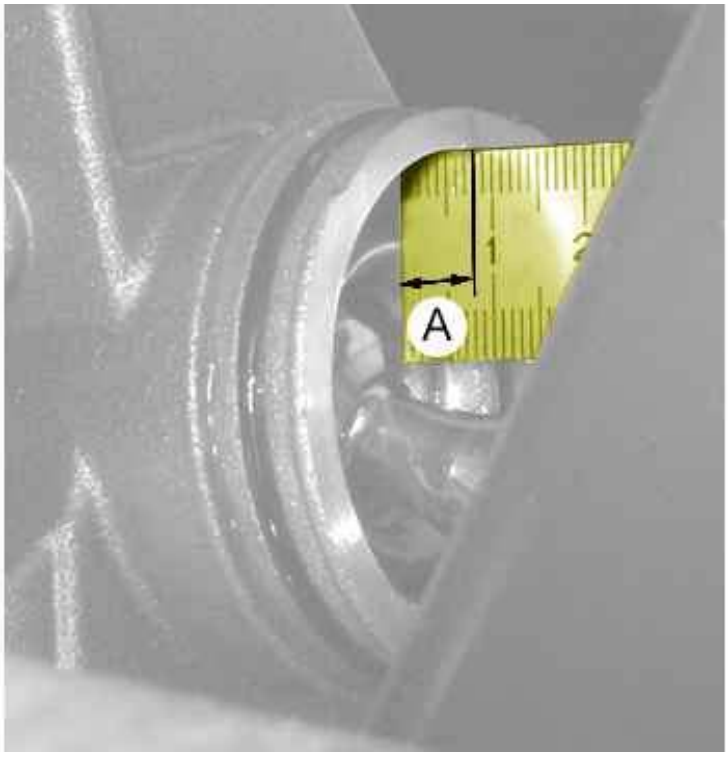

Figure : B3EP18HD

Turn the steering wheel to left hand full lock.
Measure dimension A.

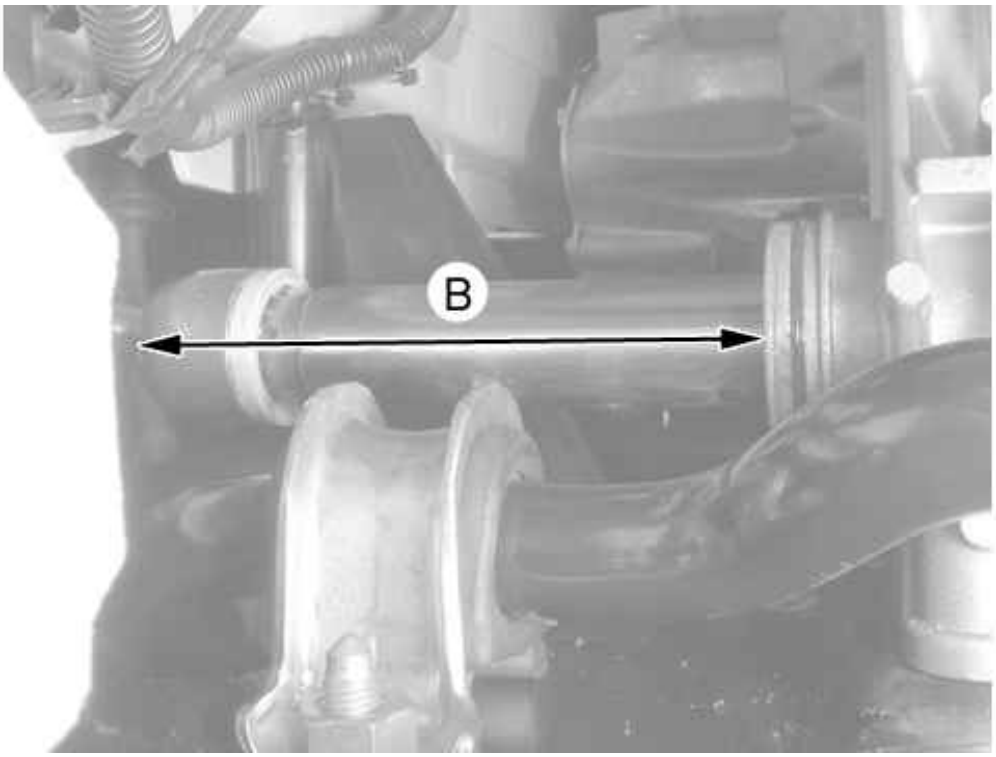

Figure : B3EP18JD

Turn the steering wheel to right hand full lock.

Measure dimension B.

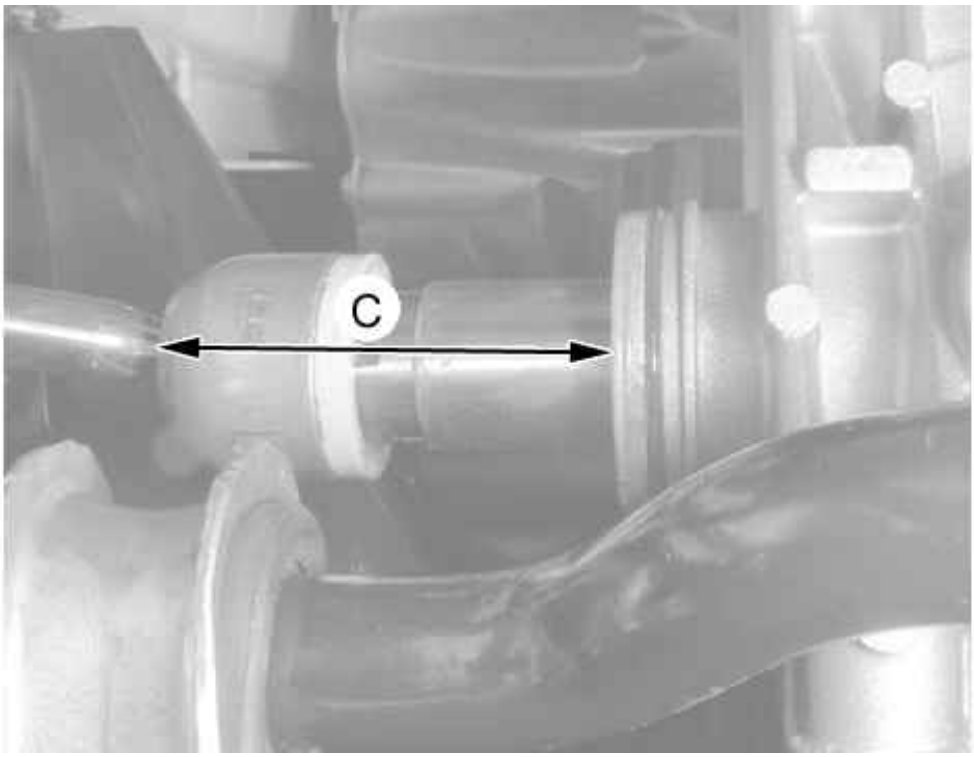

Figure : B3EP18KD

Calculate the dimension C = (A + B) : 2.
Position the steering rack to dimension "C" (mid point of the rack).

4. Additional operations

Refit :

- The protective gaiter (3)
- A new clamping collar (2) ; Using tool [1]
- The clip (1)
- The wheels

Return the vehicle to its wheels.
Tighten the wheel bolts .

REMOVING - REFITTING : STEERING MECHANISM

ESSENTIAL : Observe the safety and cleanliness recommendations .

1. Tooling

Equipment : Lifting tool .

tool	Reference	Designation
[0919] 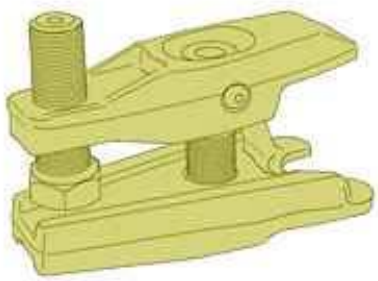 Figure : E5AB0ZPT	[0919]	ball-joint extractor

2. Removing

Disconnect the battery negative terminal.
Untighten the wheel screws (front).
Lift and support the front of the vehicle.
Remove :

- The front wheels
- The protection plates under the engine

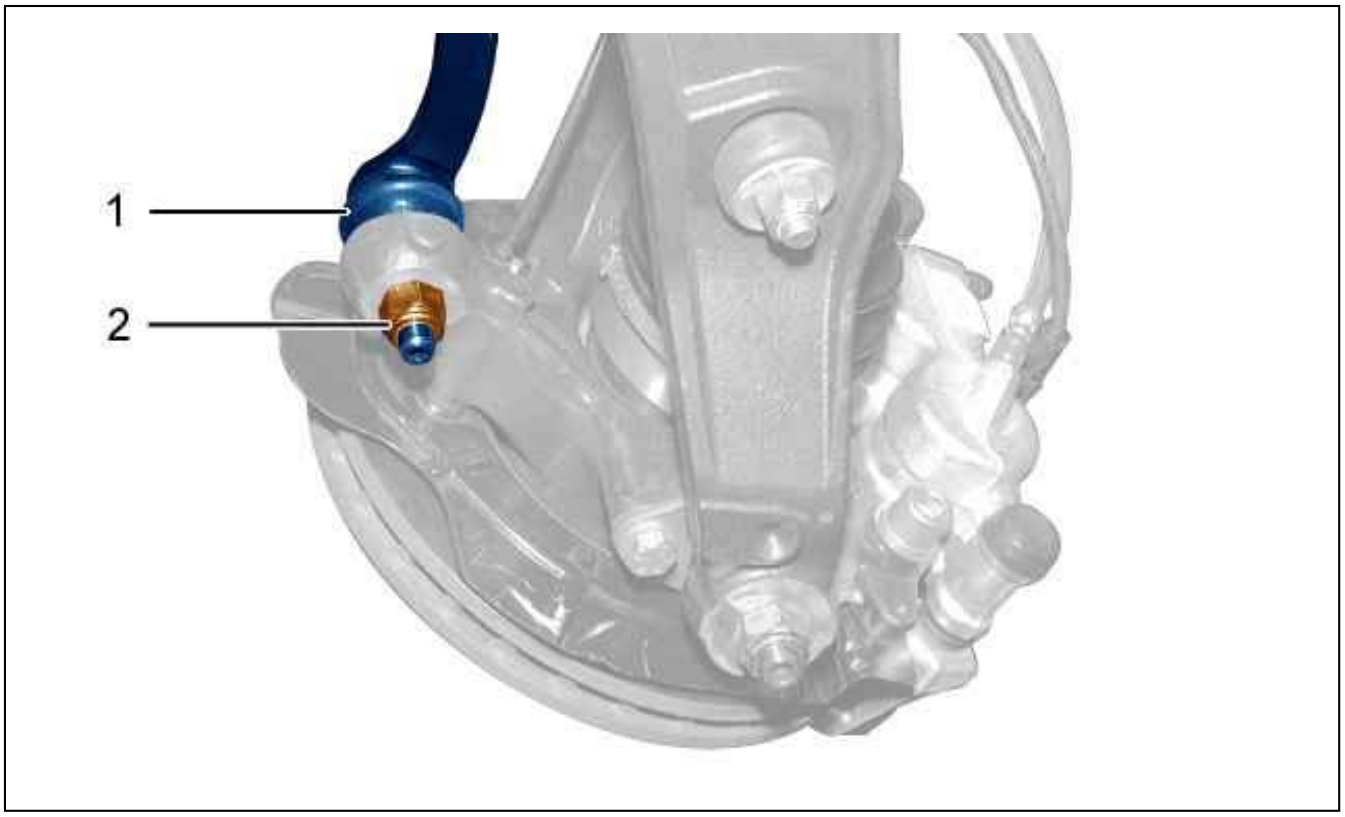

Figure : B3EG0JQD

Remove the nut (2) (on each side).
Uncouple the steering ball-joint (1) ; Using tool [0919] (on each side).

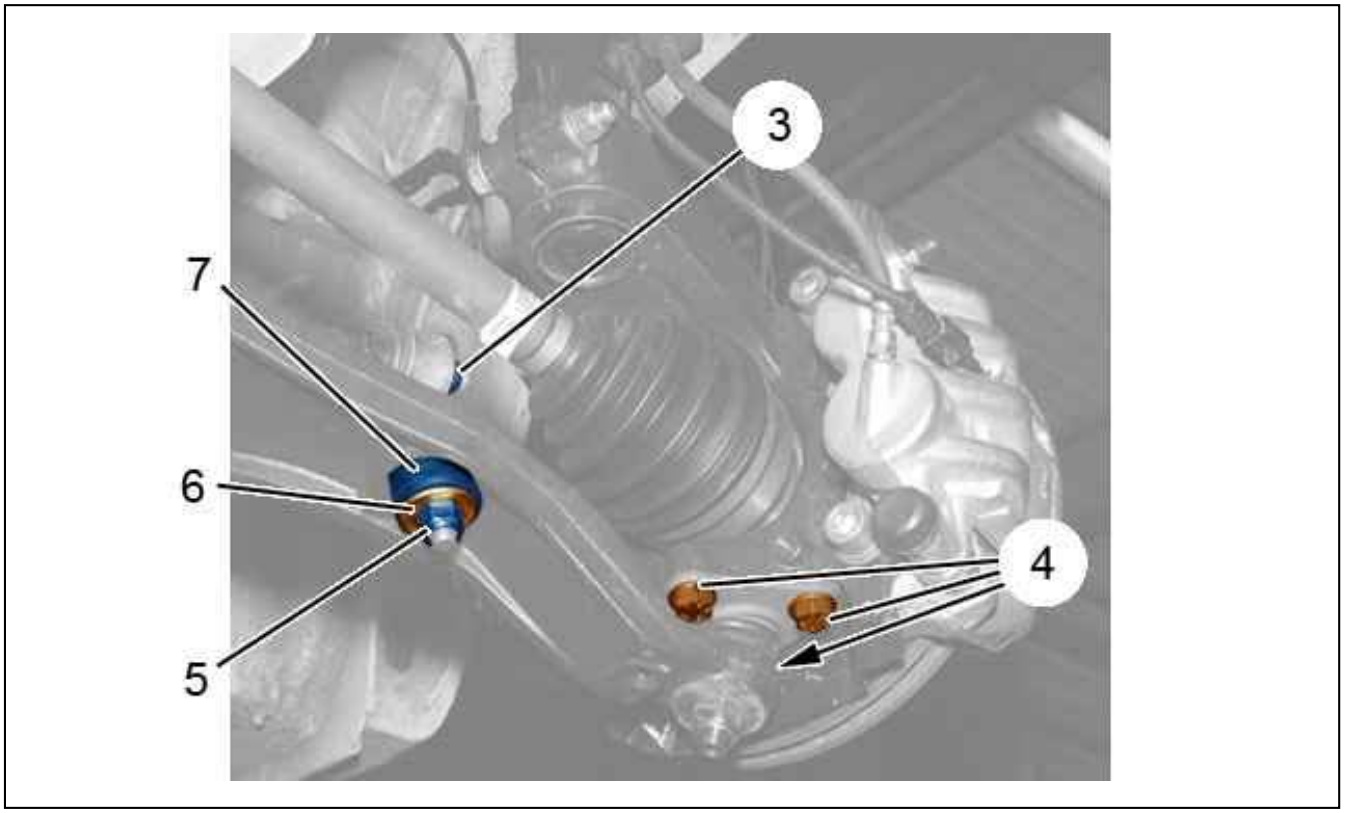

Figure : B3BP1CPD

Unscrew nut (3) (on each side).

Remove (on each side) :

- The nut (5)
- The washer (6)
- The silentblock (7)
- The 3 bolts (4)

Release : The pivot lower ball-joint (on each side).
Drain the steering assistance circuit .

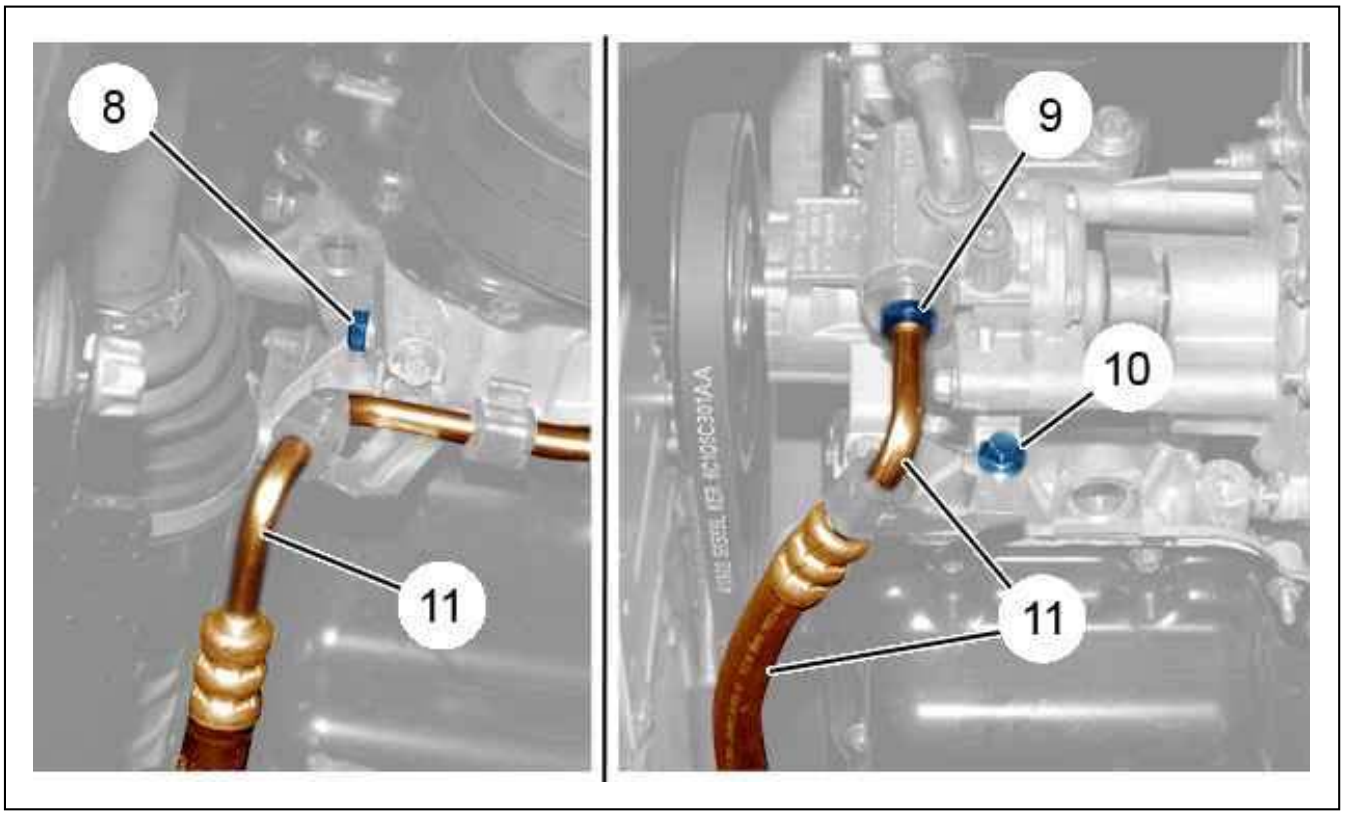

Figure : B1BPSG1D

Uncouple the high pressure pipe union (9).
Remove the bolts (8), (10).
Move aside the piping (11) without distorting it.

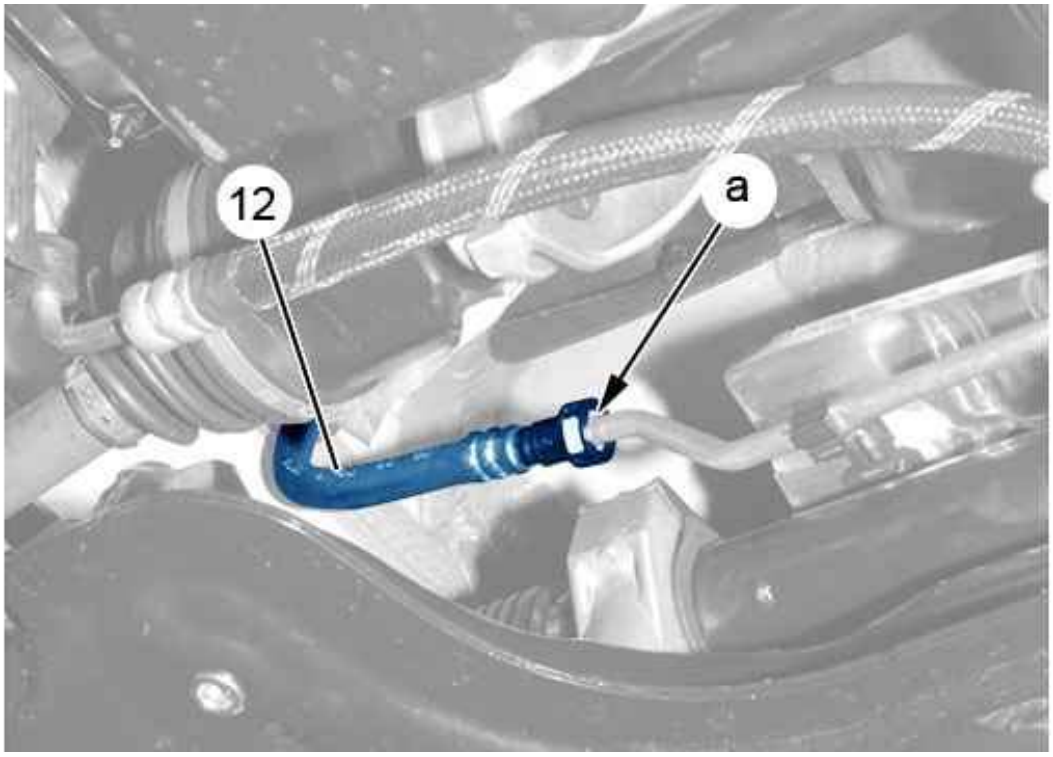

Figure : B3EG0JRD

Uncouple : The low pressure pipe (12) (at "a").
Plug the hydraulic unit unions ; Using plugs .
Disconnect the power steering regulated electrovalve connector (if necessary).

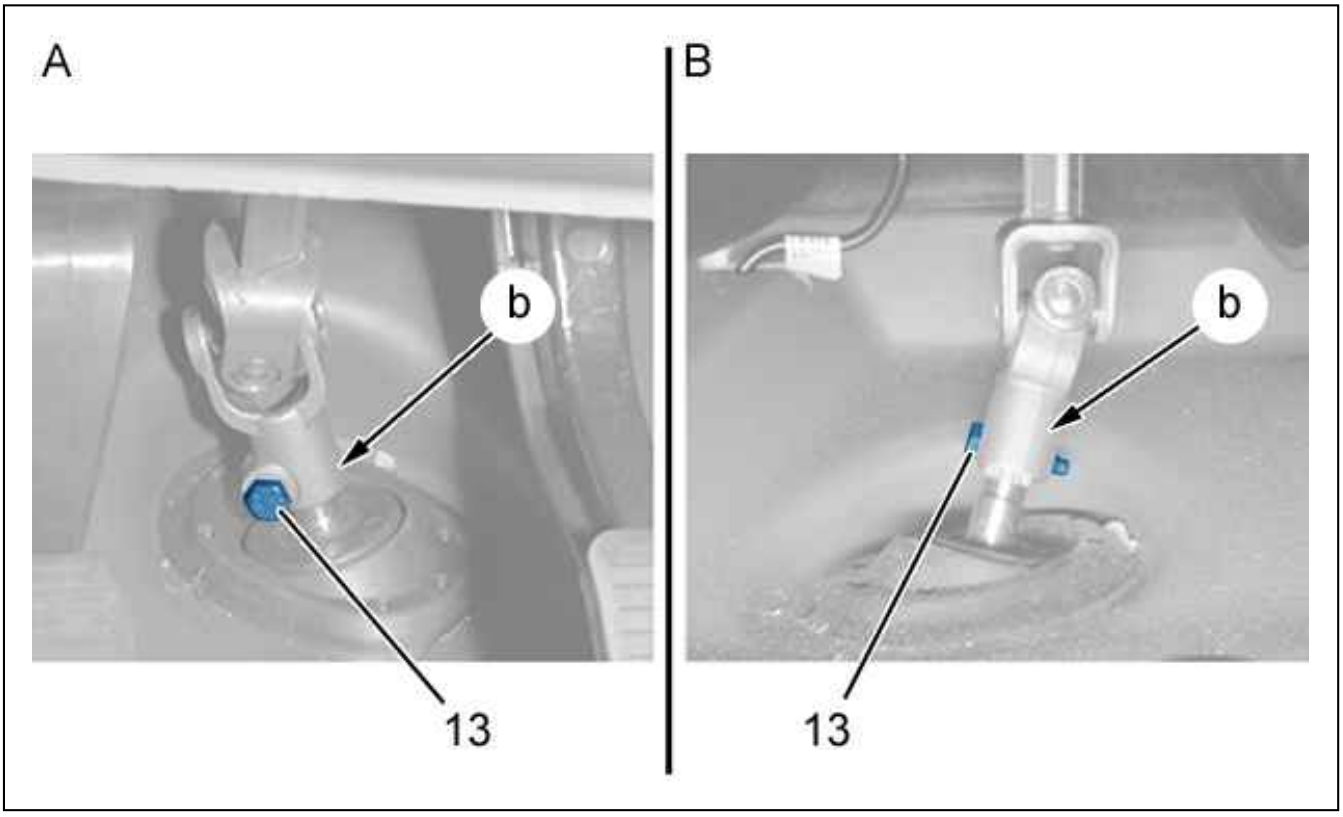

Figure : B3EG0JSD

Fitting A : Left-hand drive .
Fitting B : Right-hand drive .
Remove bolts (13).
Disengage and push the lower part of the steering column upwards (at "b").

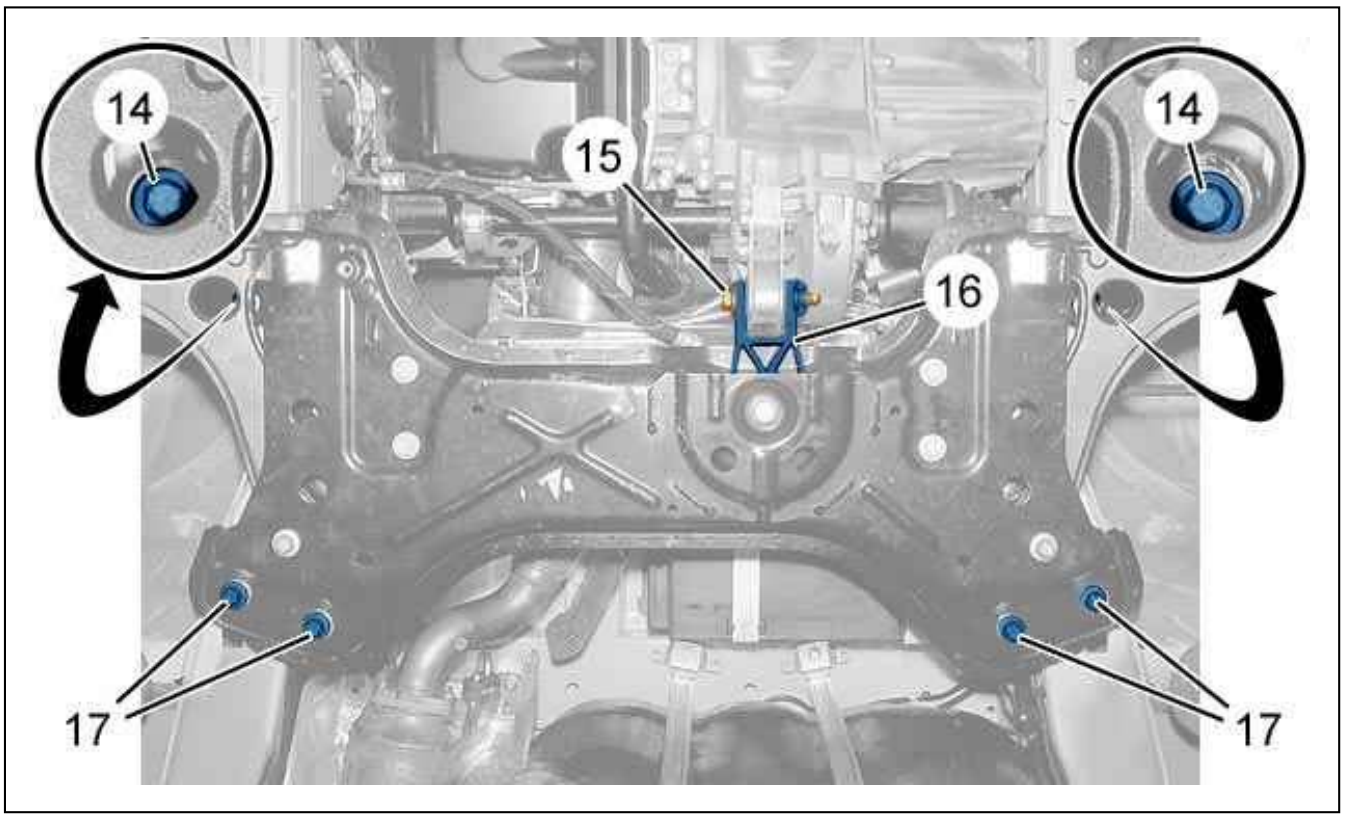

Figure : B3EG0JTD

Remove the bolt (15).
Move aside the torque reaction rod (16) from the front subframe.
Position a lifting tool to retain the front sub-frame.
Remove :

- The bolts (14)
- The bolts (17)
- The front subframe and steering mechanism assembly

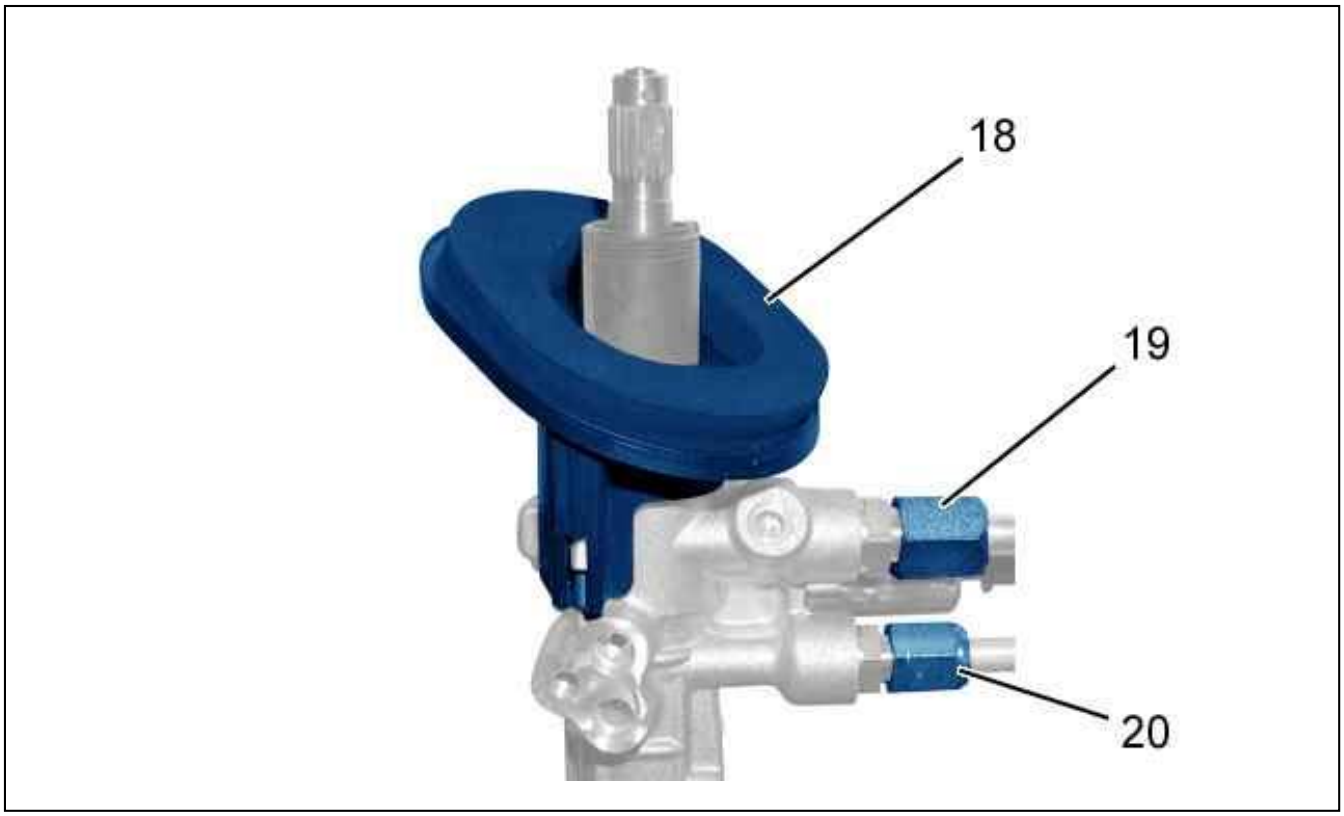

Figure : B3EG0JUD

Remove the protector (18).
Uncouple :

- The high pressure pipe union (20)
- The low pressure pipe union (19)

Remove :

- The thermal protector
- The high pressure pipe (11)
- The low pressure pipe (12)

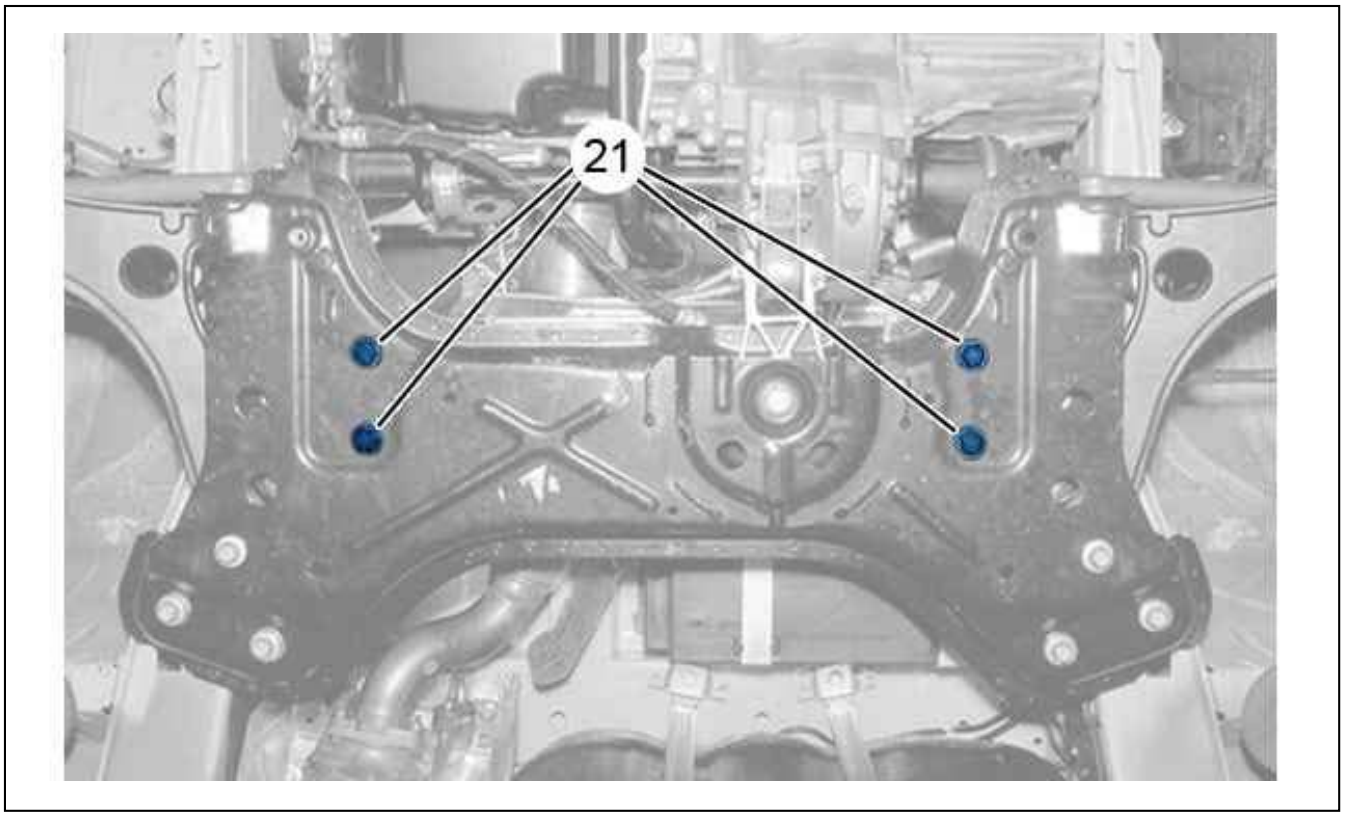

Figure : B3EG0JVD

Remove the bolts (21).
Uncouple the steering mechanism.

3. Refitting

CAUTION : Adhere to the tightening torques.

Tightening torques :

- Front suspension
- Power steering

N.B. : Always fit new Nylstop nuts.

Couple the steering mechanism.
Refit the bolts (21).
Remove the protector (18) (new).
Refit :

- The low pressure pipe (12)
- The high pressure pipe (11)
- The thermal protector

Couple up :

- The high pressure pipe union (20)
- The low pressure pipe union (19)

Position the front subframe and steering mechanism assembly on the body.
Refit :

- The bolts (17)

- The bolts (14)

Engage the torque reaction rod (16) on the front sub-frame.
Refit bolt (15).
Couple up :

- The low pressure pipe (12) (at "a")
- The high pressure pipe union (9)

Refit :

- The bolt (8)
- The bolt (10)

Connect the power steering regulated electrovalve connector (if necessary).
Position the hub carrier lower ball joint (on each side).
Refit (on each side) :

- The 3 bolts (4)
- The silentblock (7)
- The washer (6)
- The nut (5)
- The nut (3)

Couple up the steering ball-joint (1) (on each side).
Refit the nut (2) (on each side).
Couple the lower part of the steering column (at "b").
Refit the new screw (13) (Pre-coated with a thread-locking product).
Fit the wheels.
Return the vehicle to its wheels.
Tighten the wheel bolts .

CAUTION : Perform the operations to be carried out following reconnection of the battery.

Reconnect the battery negative terminal.
Fill and bleed the power steering system .

REMOVING - REFITTING : ROTARY CONNECTOR (ESP STEERING ANGLE)

ESSENTIAL : Observe the safety and cleanliness recommendations.

1. Removing

1.1. Rotary connector

Disconnect the battery.
Put the wheels in the straight ahead position.
Push back the steering wheel as far as it will go.
Remove the steering wheel (see the relevant operation).



Figure : C5FP0YPD

Remove lower panel (1) (see the relevant operation).

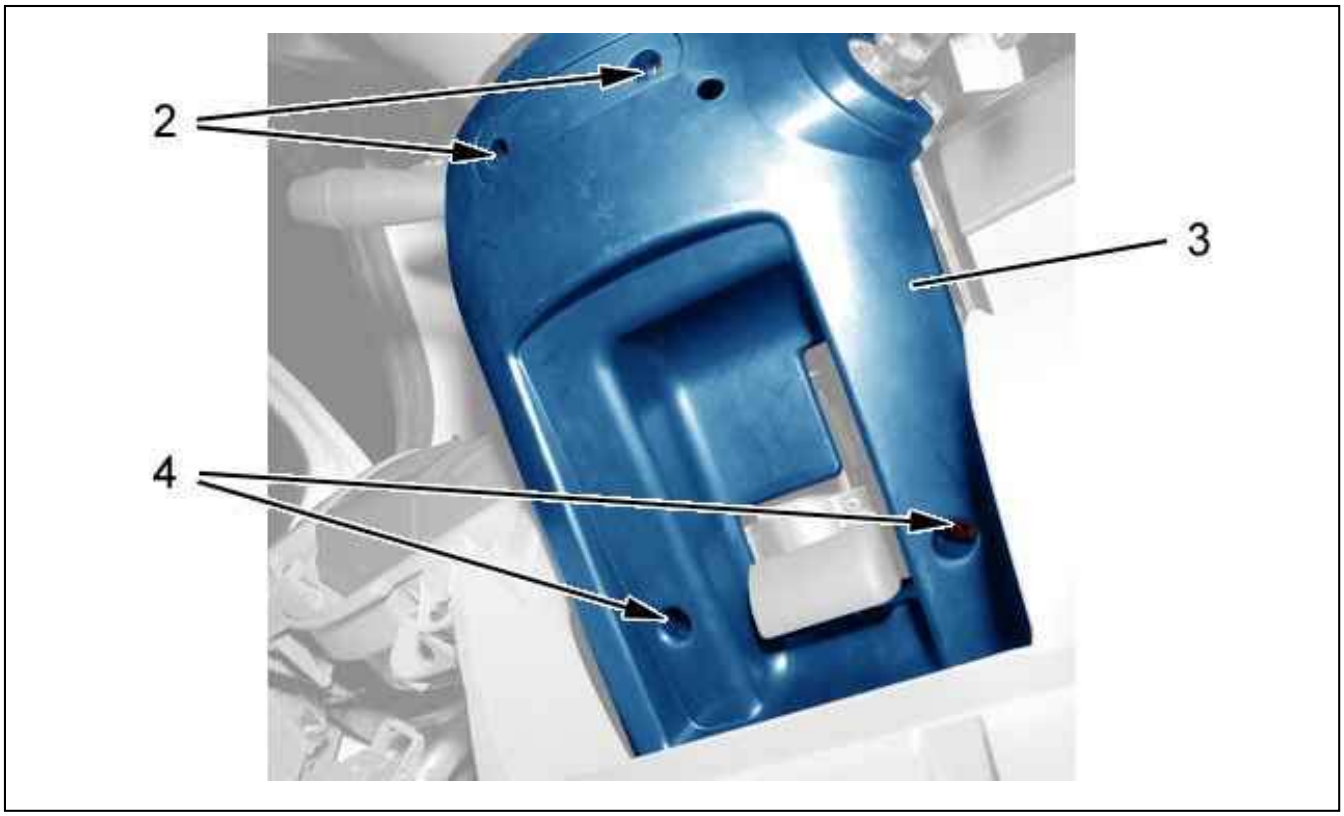

Figure : C5FP0YQD

Remove :

- The bolts (2)
- The bolts (4)
- The lower trim on the steering column (3)

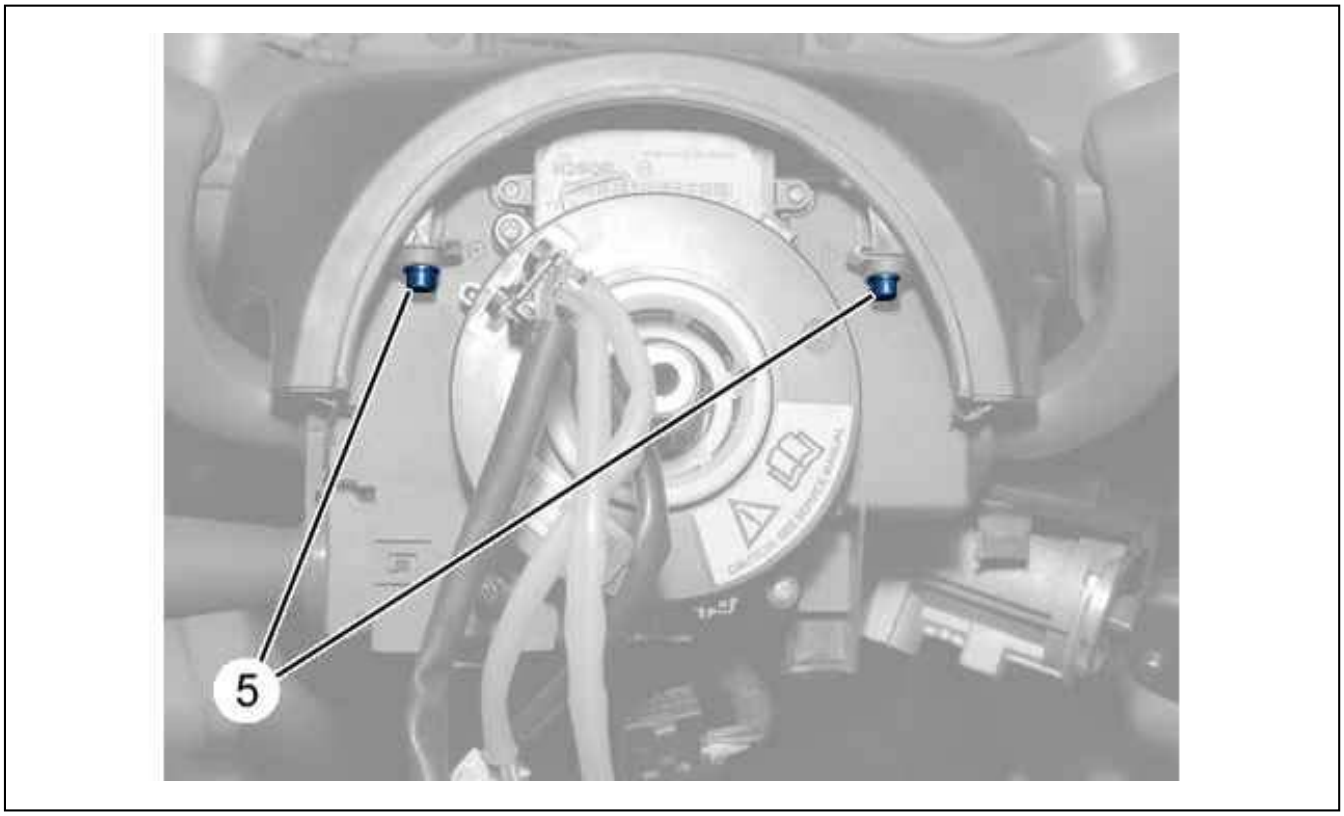

Figure : C5FP0YRD

Remove the bolts (5).

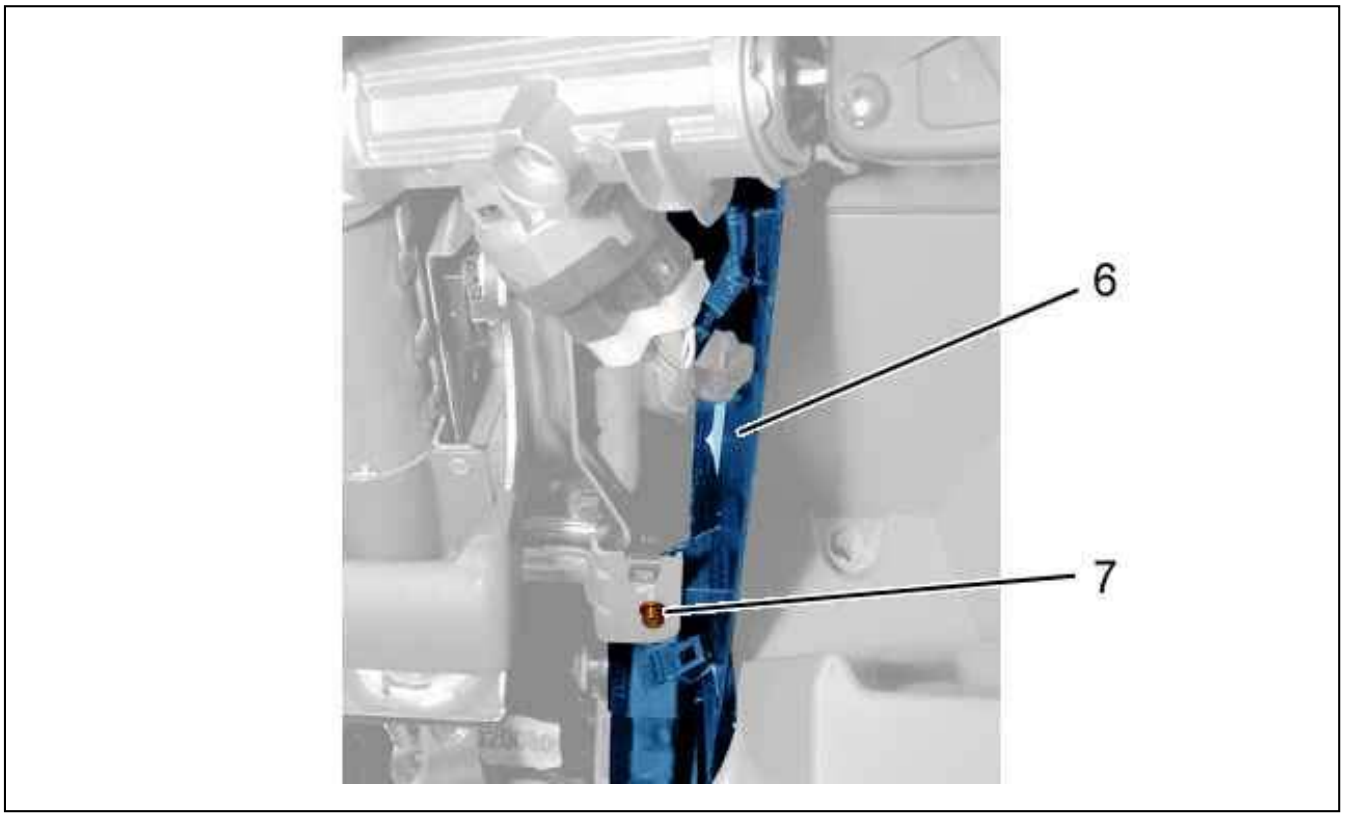

Figure : C5FP0YSD

Remove :

- The (7) bolt
- The steering column upper cowling (6)

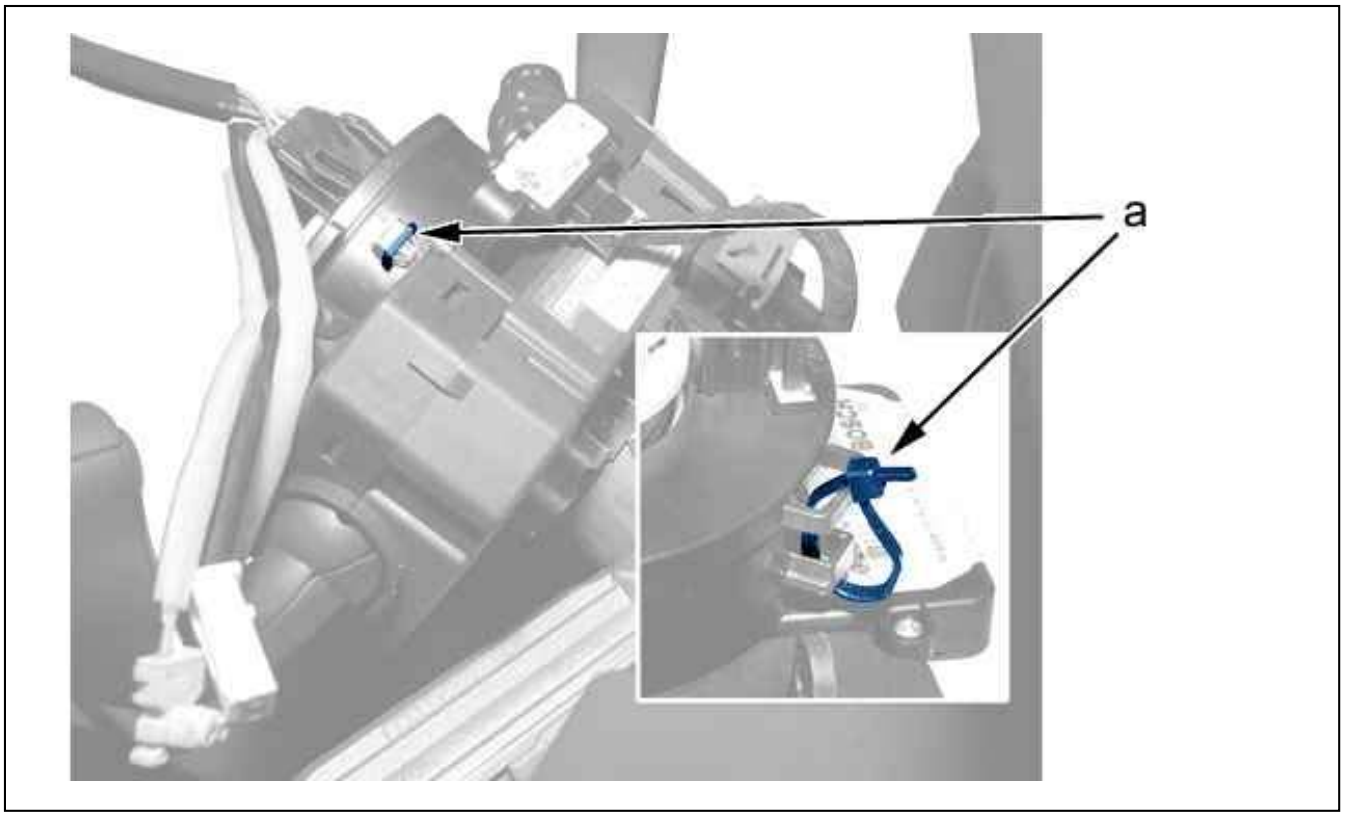

Figure : C5FP0YTD

Fit a plastic collar to maintain the position of the rotary switch (at "a").

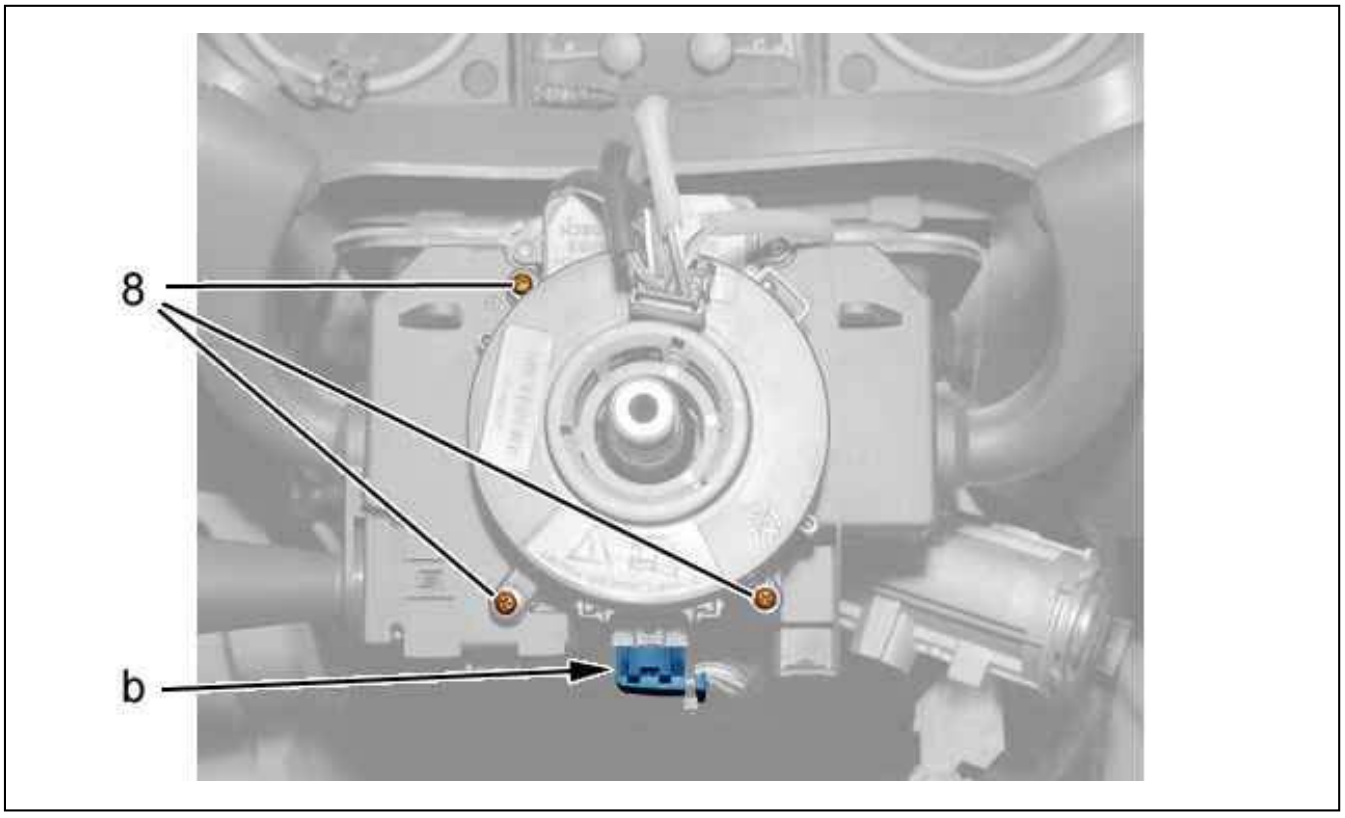

Figure : C5FP0YUD

Disconnect the connector "b".
Remove :

- The 3 bolts (8)
- The rotary connector

1.2. Steering wheel angle sensor

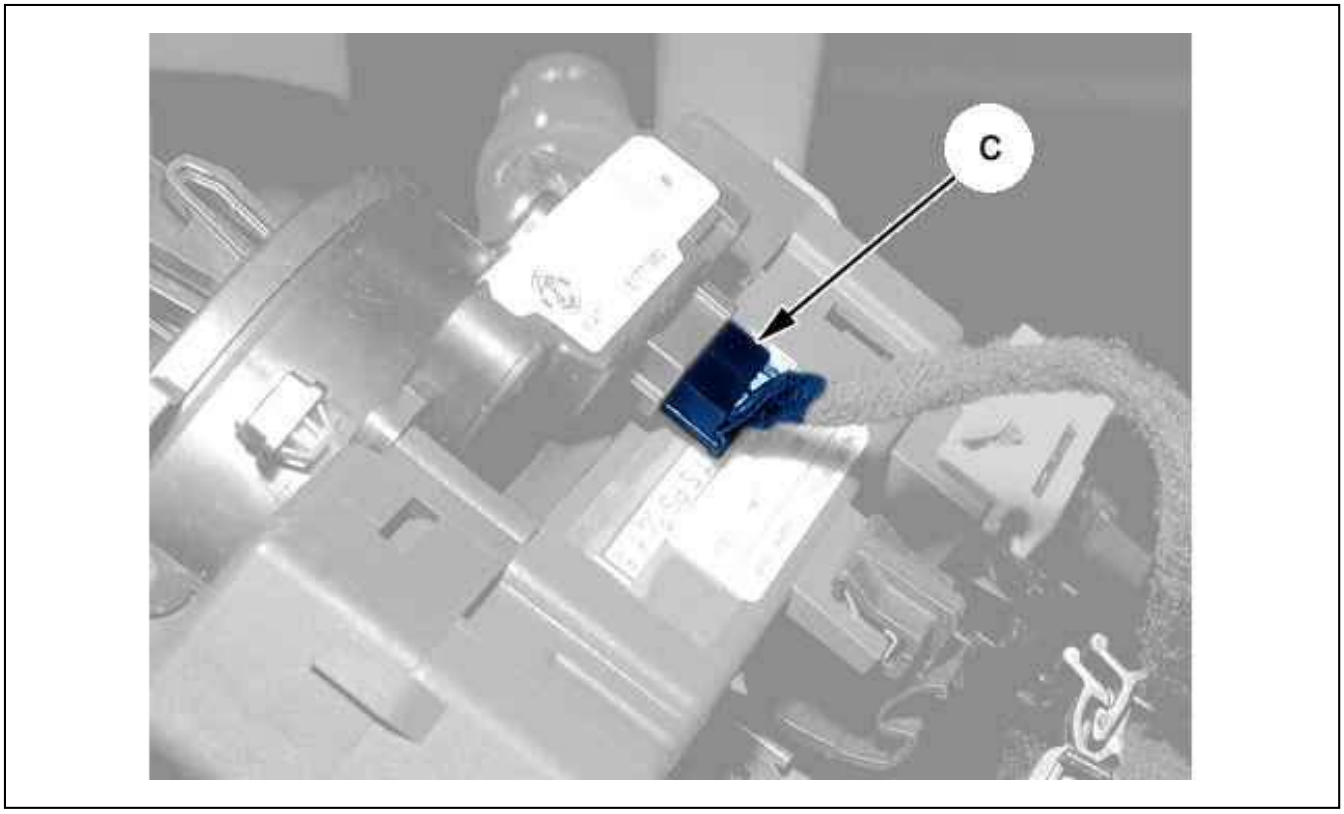

Figure : C5FP0YVD

Disconnect the connector "c".

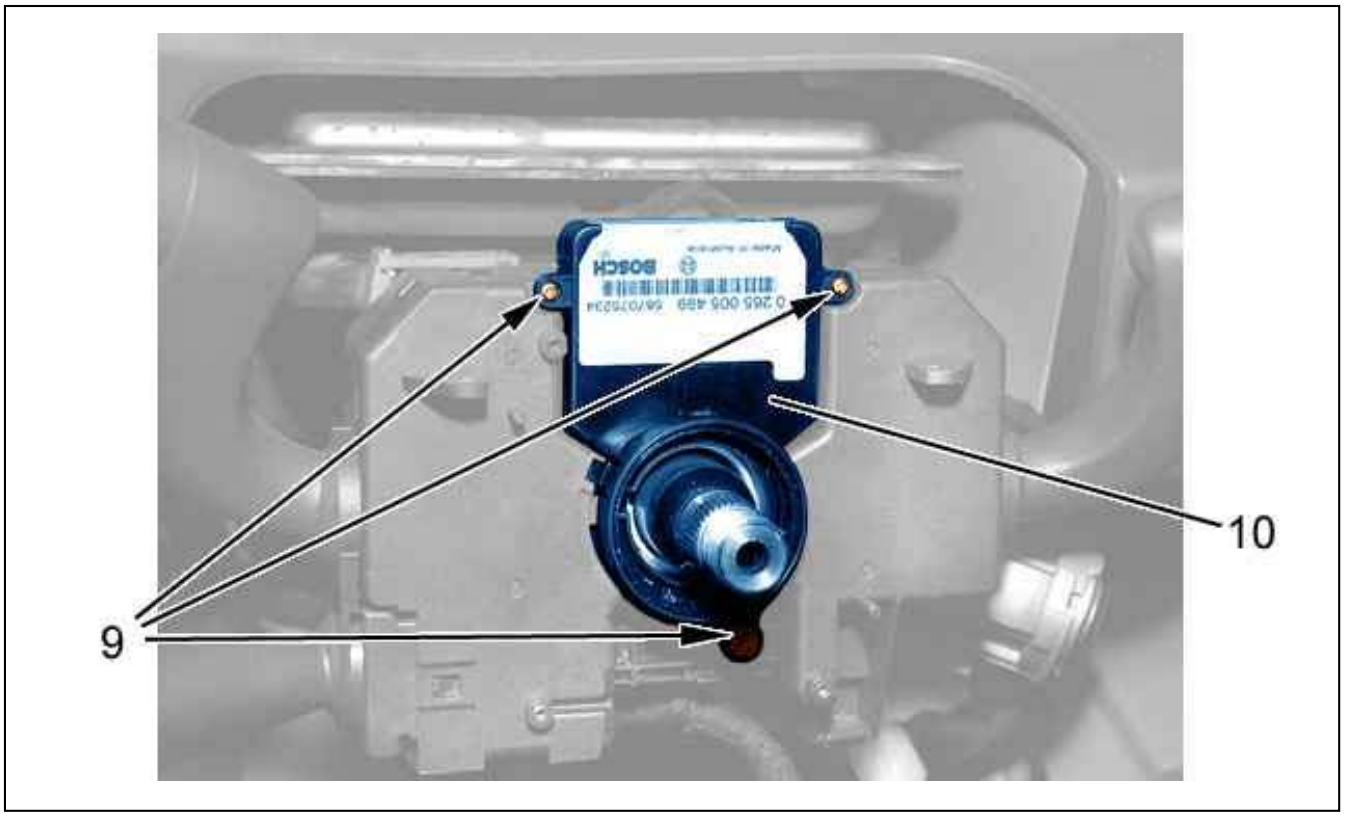

Figure : C5FP0YWD

Remove :

- The 3 bolts (9)
- The steering wheel angle sensor (10)

2. Refitting

2.1. Steering wheel angle sensor

Refit the steering wheel angle sensor (10).
Refit and tighten the 3 screws (9).
Connect the connector "c".

2.2. Rotary connector

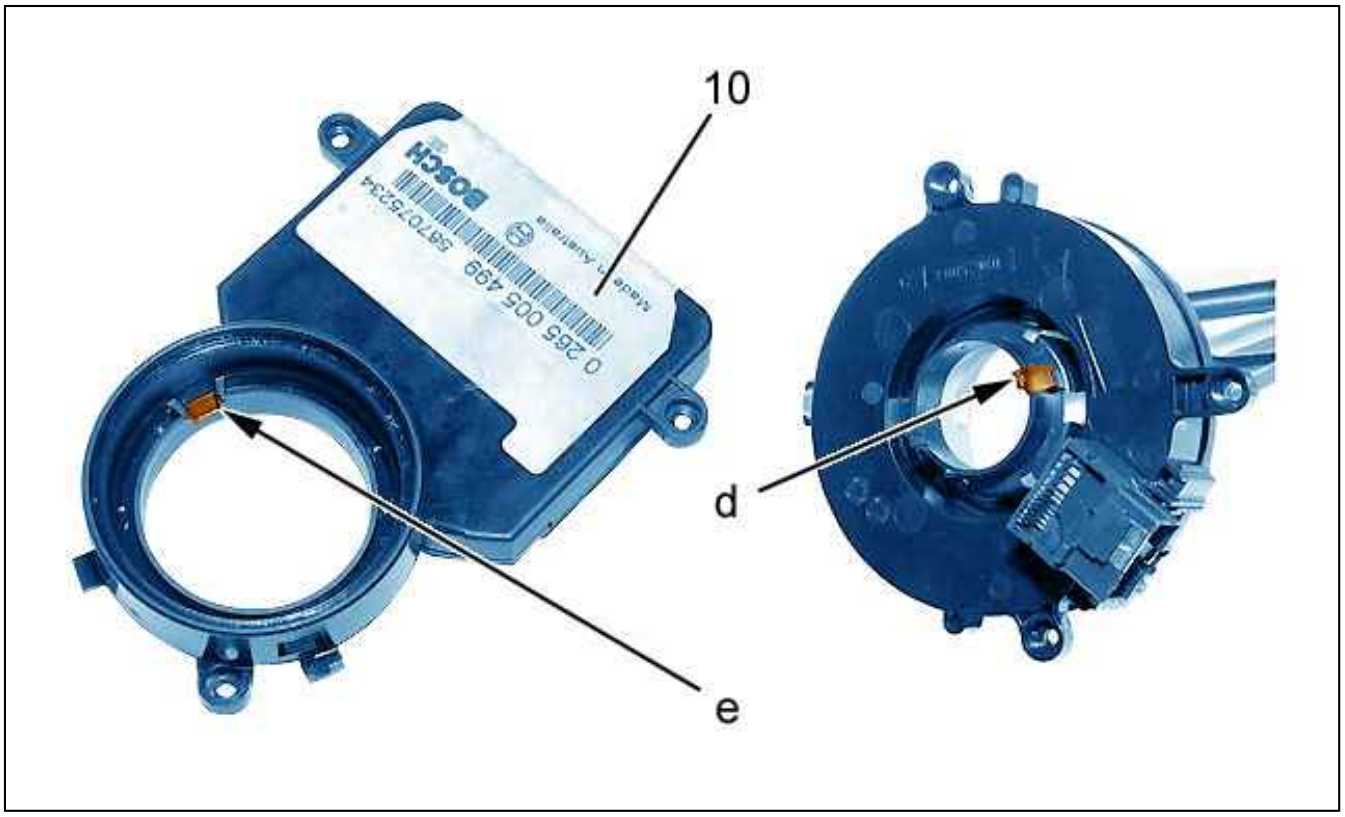

Figure : C5FP0YXD

Position the rotary switch on the controls under the steering wheel.

N.B. : Align the failsafe " d " with the groove " e " on the steering wheel angle sensor (10).

Refit and tighten the 3 screws (8).
Connect the connector "b".
Cut and remove the plastic collar.
Refit :

- The steering column upper cowling (6)
- The (7) bolt ; Tighten to 0,2 ± 0,02 daN.m
- The bolts (5) ; Tighten to 0,2 ± 0,02 daN.m
- The lower trim on the steering column (3)
- The bolts (2) ; Tighten to 0,2 ± 0,02 daN.m
- The bolts (4) ; Tighten to 0,2 ± 0,02 daN.m
- The lower panel (1) (see the relevant operation)
- The steering wheel (see the relevant operation)

Reconnect the battery.
Check that the steering wheel electrical controls operate correctly.

REMOVING - REFITTING : STEERING WHEEL

ESSENTIAL : Observe the safety and cleanliness recommendations.

1. Removing

Disconnect the battery.

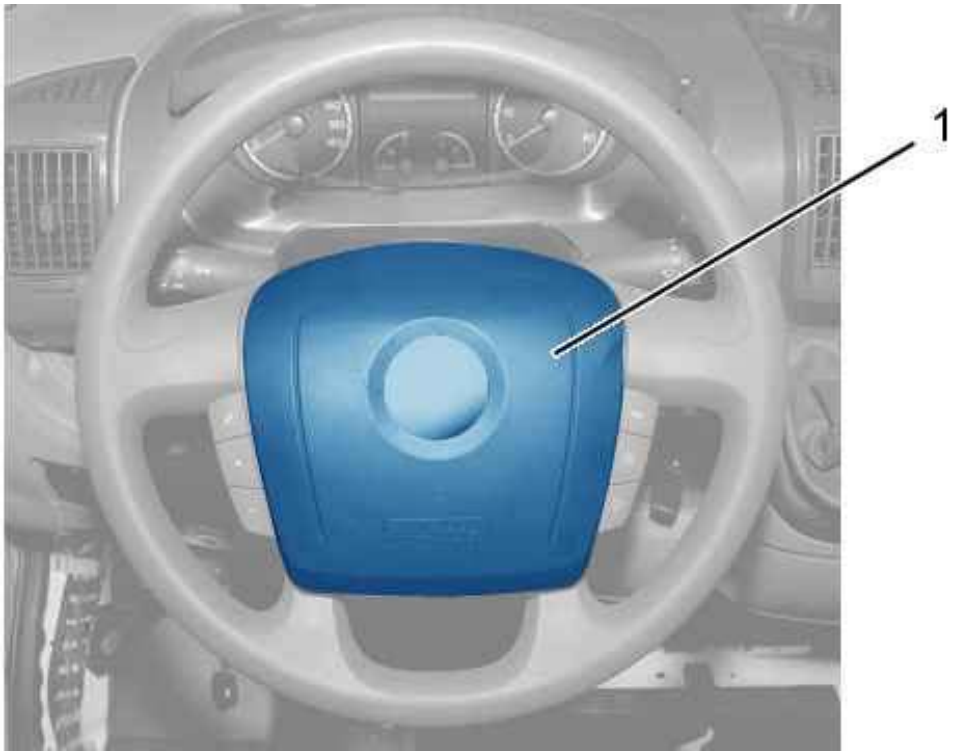

Figure : C5FP0YKD

Remove the driver’s air bag (1) (see the relevant operation).
Put the wheels in the straight ahead position.

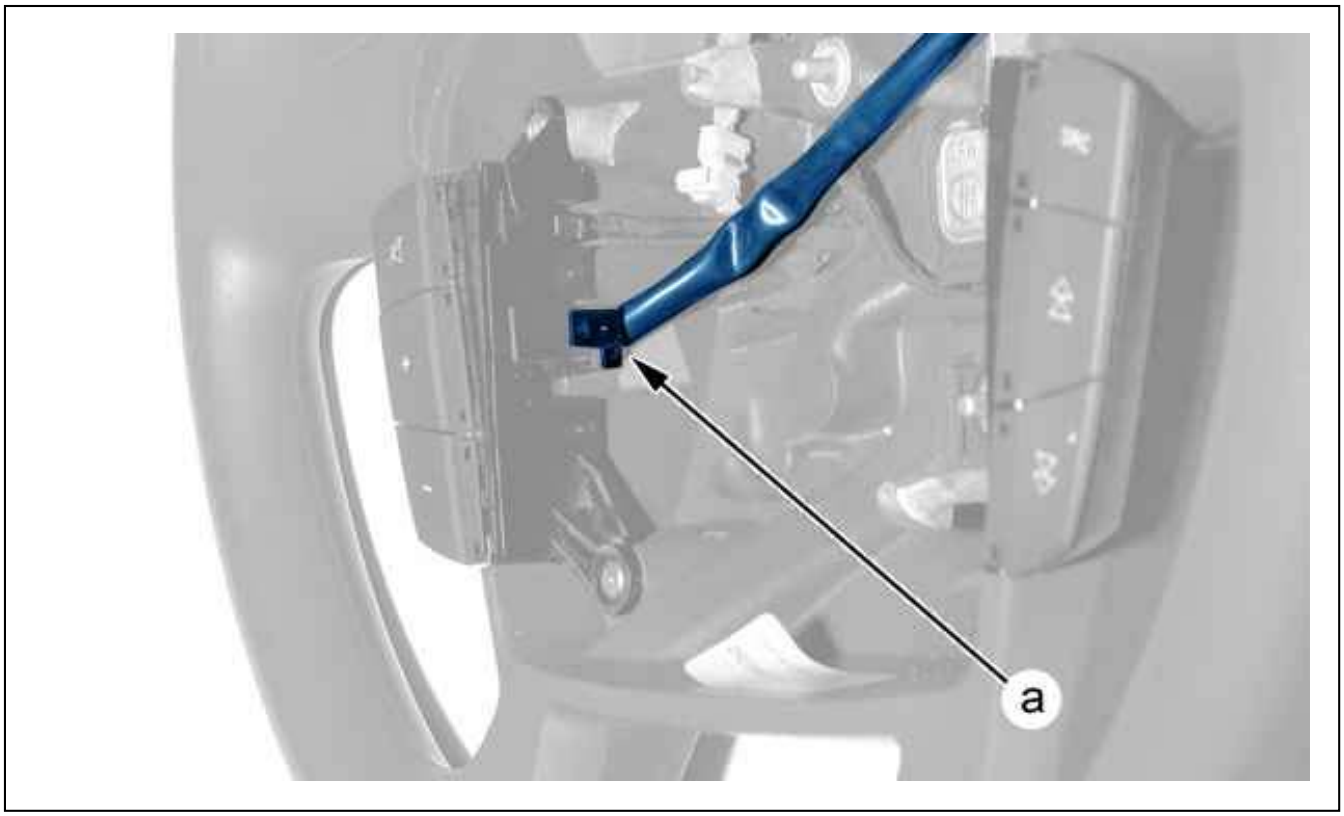

Figure : C5FP0YLD

Disconnect the connector "a".

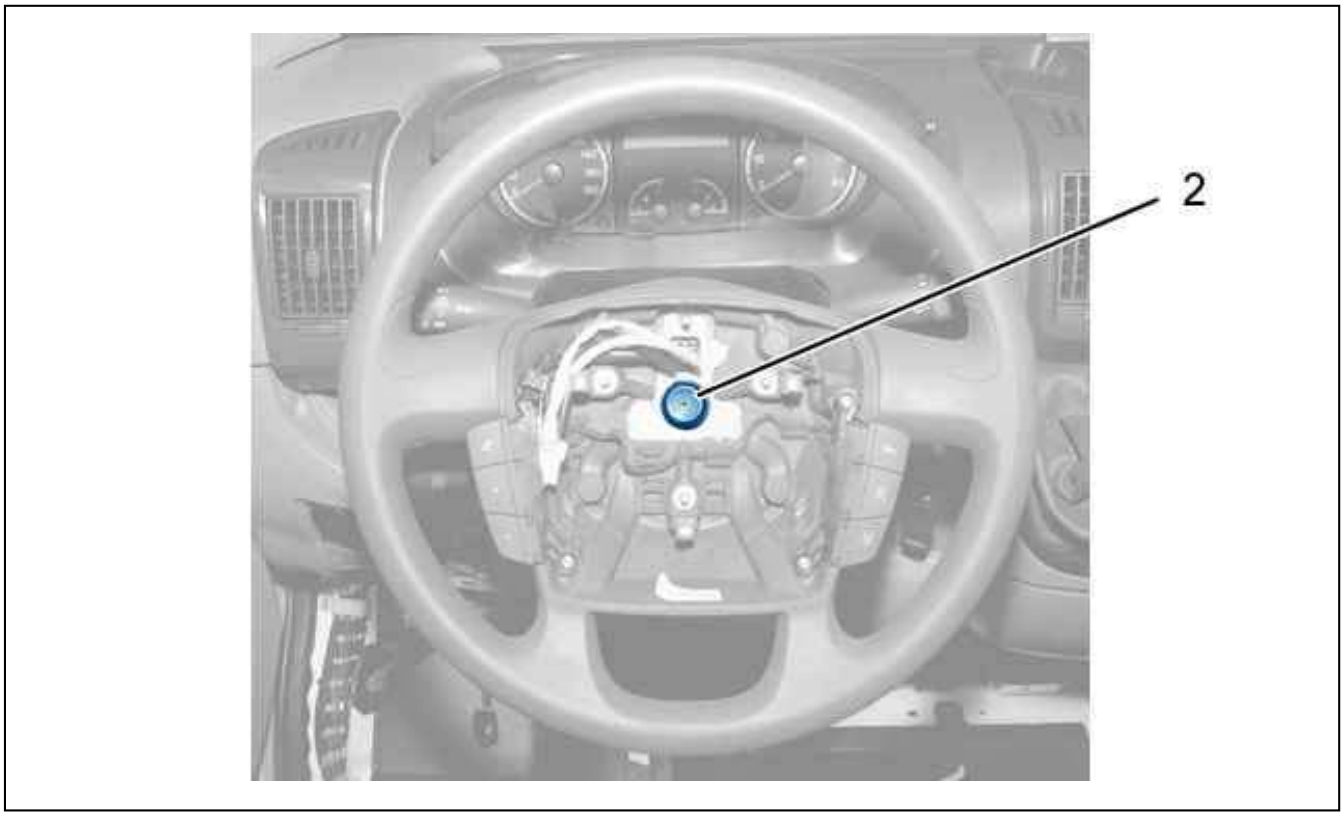

Figure : C5FP0YMD

Remove the cover (2).

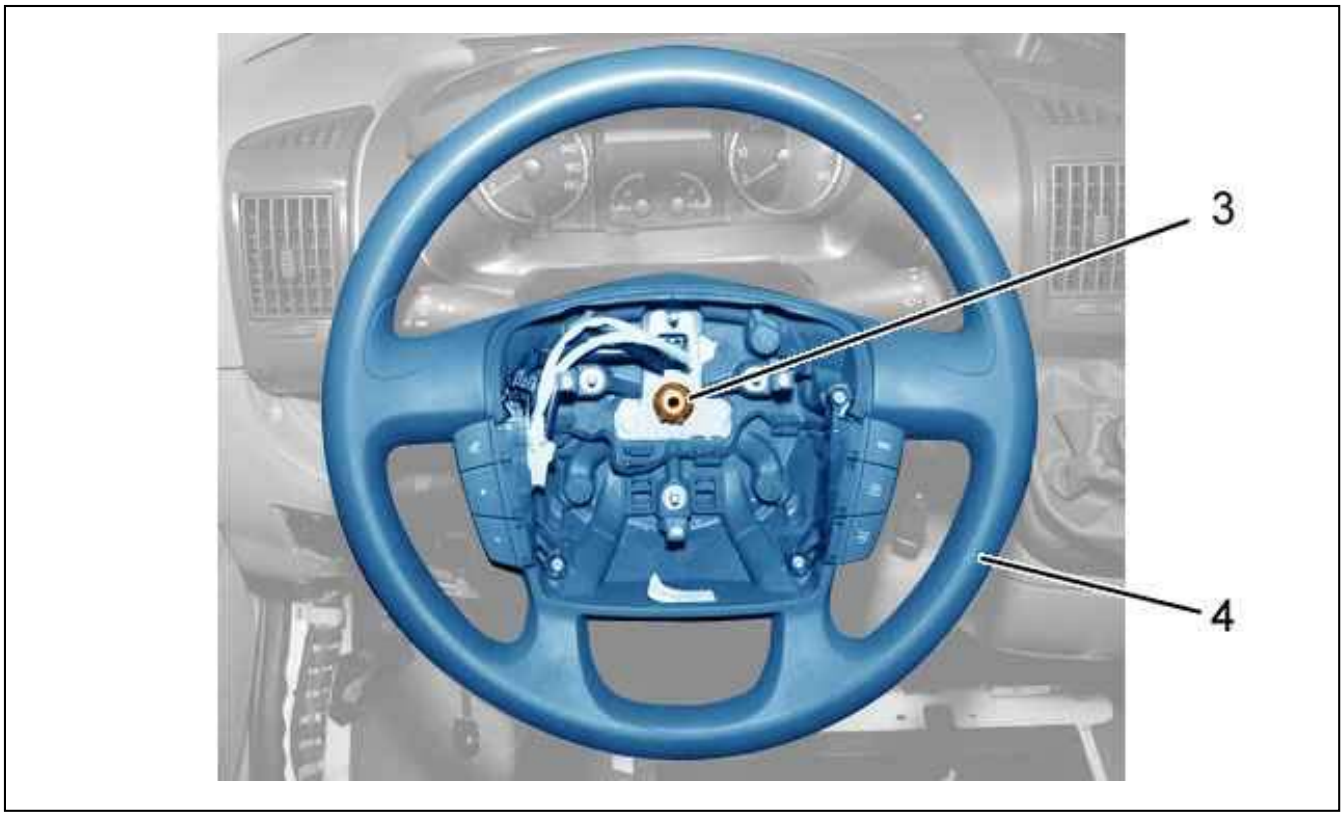

Figure : C5FP0YND

Unscrew nut (3).
Detach the steering wheel trim (4).
Remove :

- The nut (3)
- The steering wheel (4)

2. Refitting

Refit :

- The steering wheel (4)
- The nut (3) ; Tighten to 5 ± 1 daN.m
- The cover (2)

Reconnect the connector "a".
Refit the driver’s airbag (1) (see the relevant operation).
Reconnect the battery.

REMOVING - REFITTING : STEERING LOCK

ESSENTIAL : Observe the safety and cleanliness recommendations.

1. Removing

Disconnect the battery.
Remove the controls at the steering wheel (see the relevant operation).



Figure : C5FP0Z0D

Slacken the screws (1) ; Using a punch and a hammer.

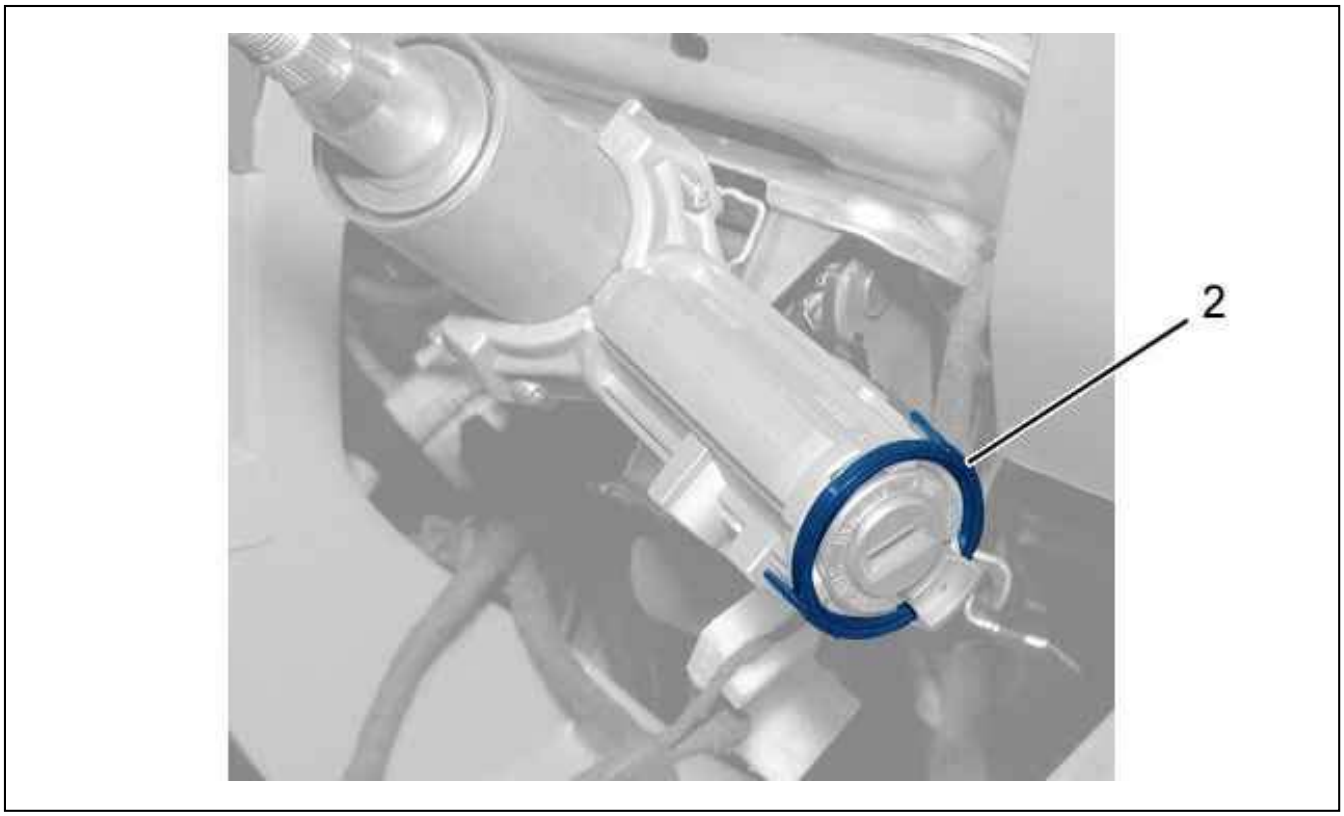

Figure : B3EP18PD

Unclip the transponder sensor (2).
Disconnect the connectors .
Remove :

- The bolts (1)
- The steering lock (mark the direction of fitting)

2. Refitting

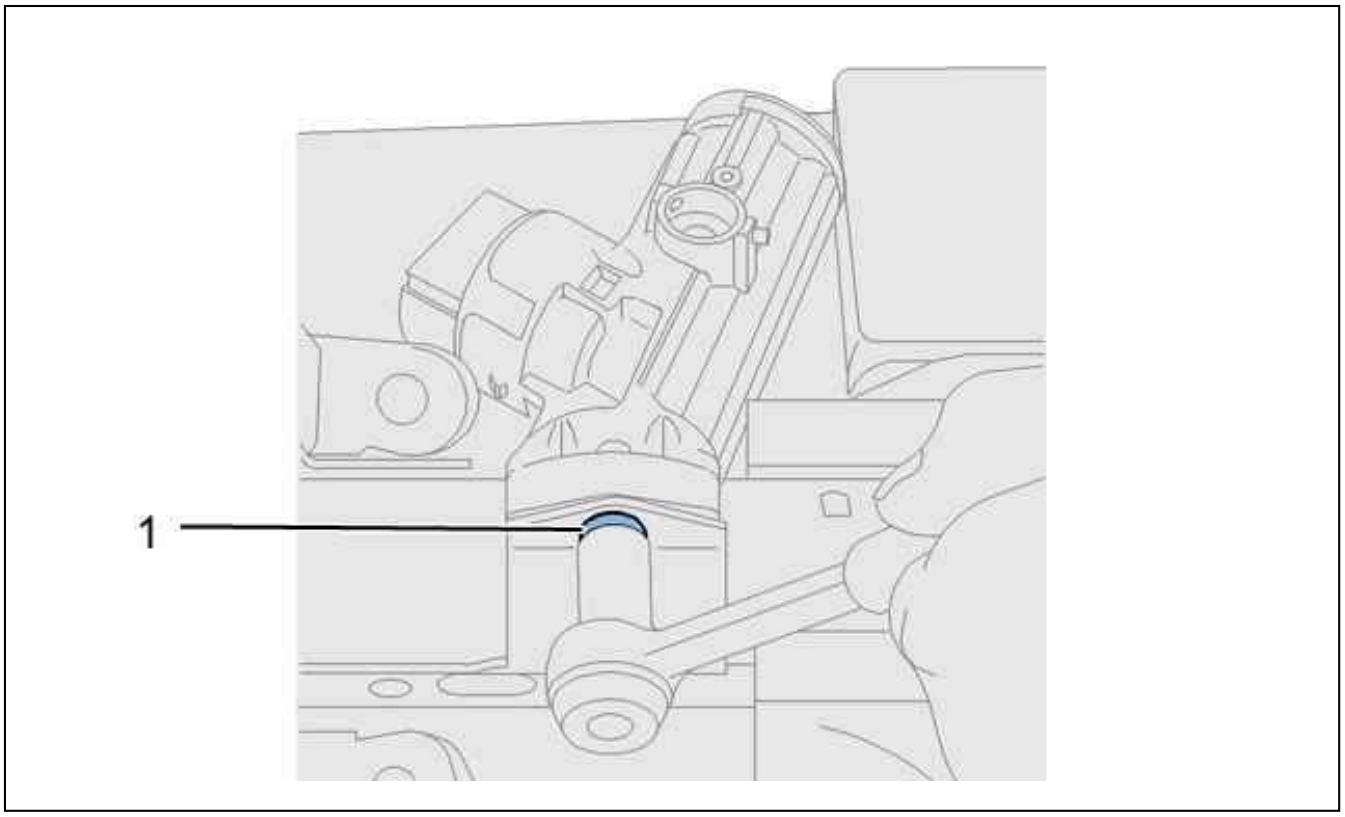

Figure : B3EP18QD

Refit :

- The steering lock
- The bolts (1)

Tighten screws (1) until shearing off the screw heads.
Refit The transponder aerial (2).
Connect the connectors .
Refit The controls under the steering wheel (see the relevant operation).
Reconnect the battery.

REMOVING - REFITTING : STEERING WHEEL CONTROLS

ESSENTIAL : Observe the safety and cleanliness recommendations.

1. Removing

Disconnect the battery.
Put the wheels in the straight ahead position.
Push back the steering wheel as far as it will go.
Remove the steering wheel (see the relevant operation).



Figure : C5FP0YPD

Remove lower panel (1) (see the relevant operation).

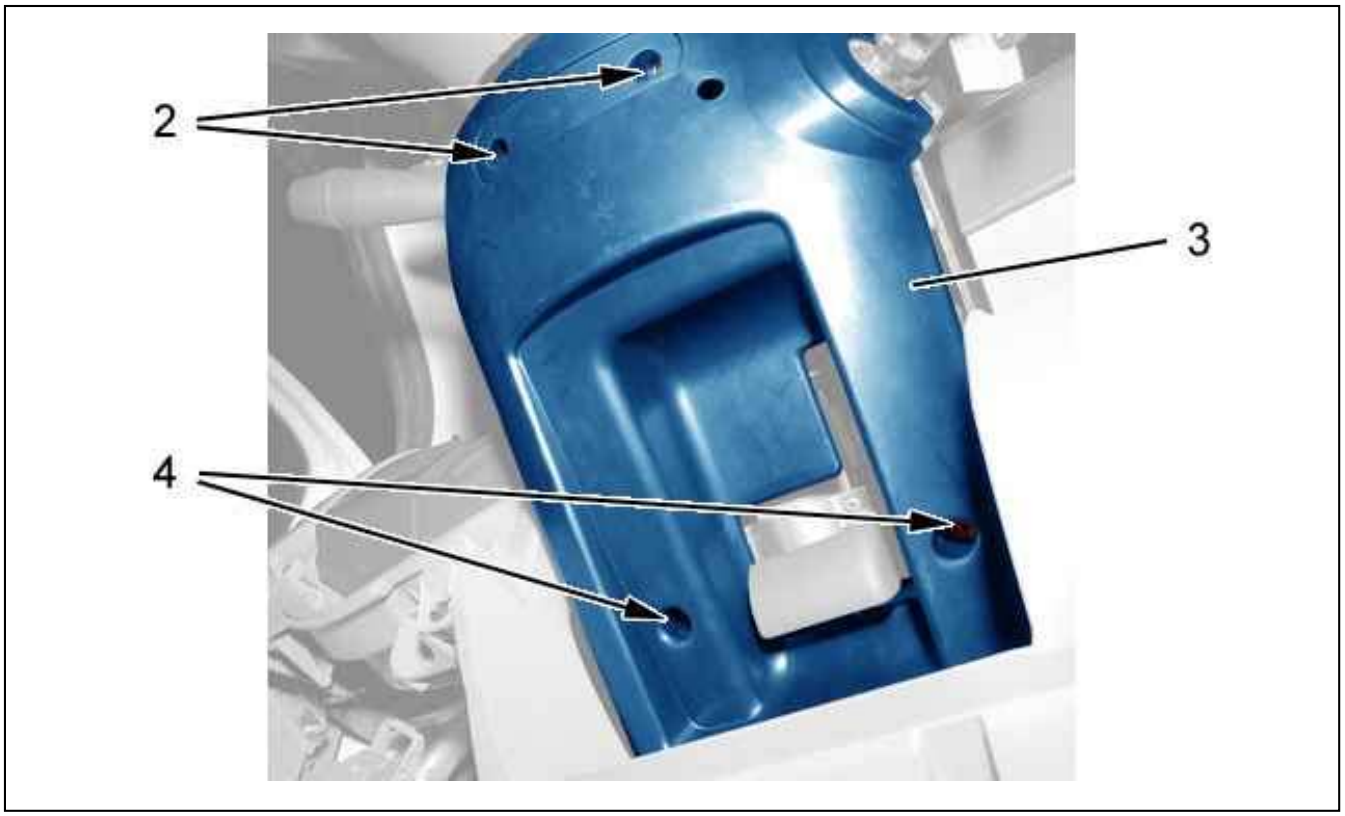

Figure : C5FP0YQD

Remove :

- The screws (2) and (4)
- The lower trim on the steering column (3)

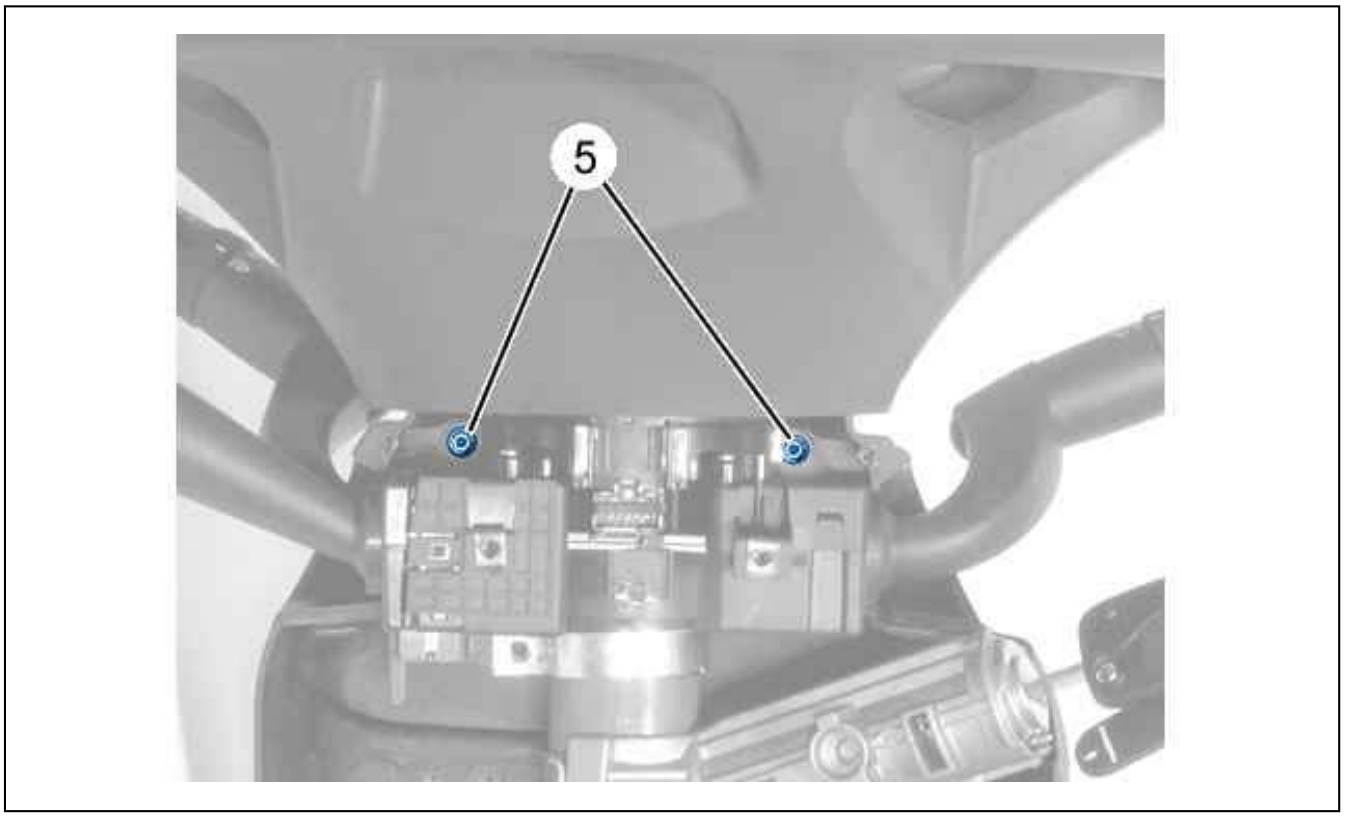

Figure : C5FP0YYD

Remove the bolts (5).

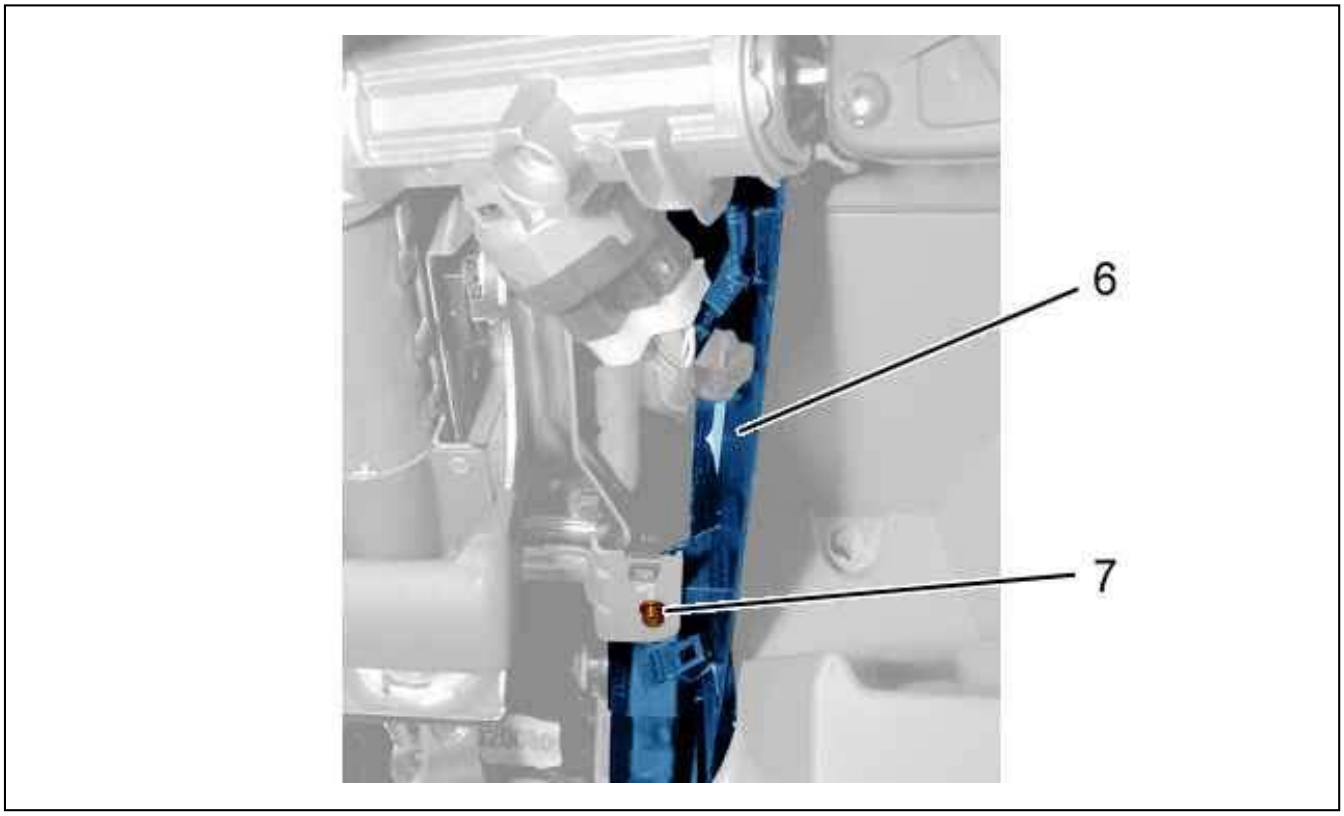

Figure : C5FP0YSD

Remove :

- The (7) bolt
- The steering column upper cowling (6)

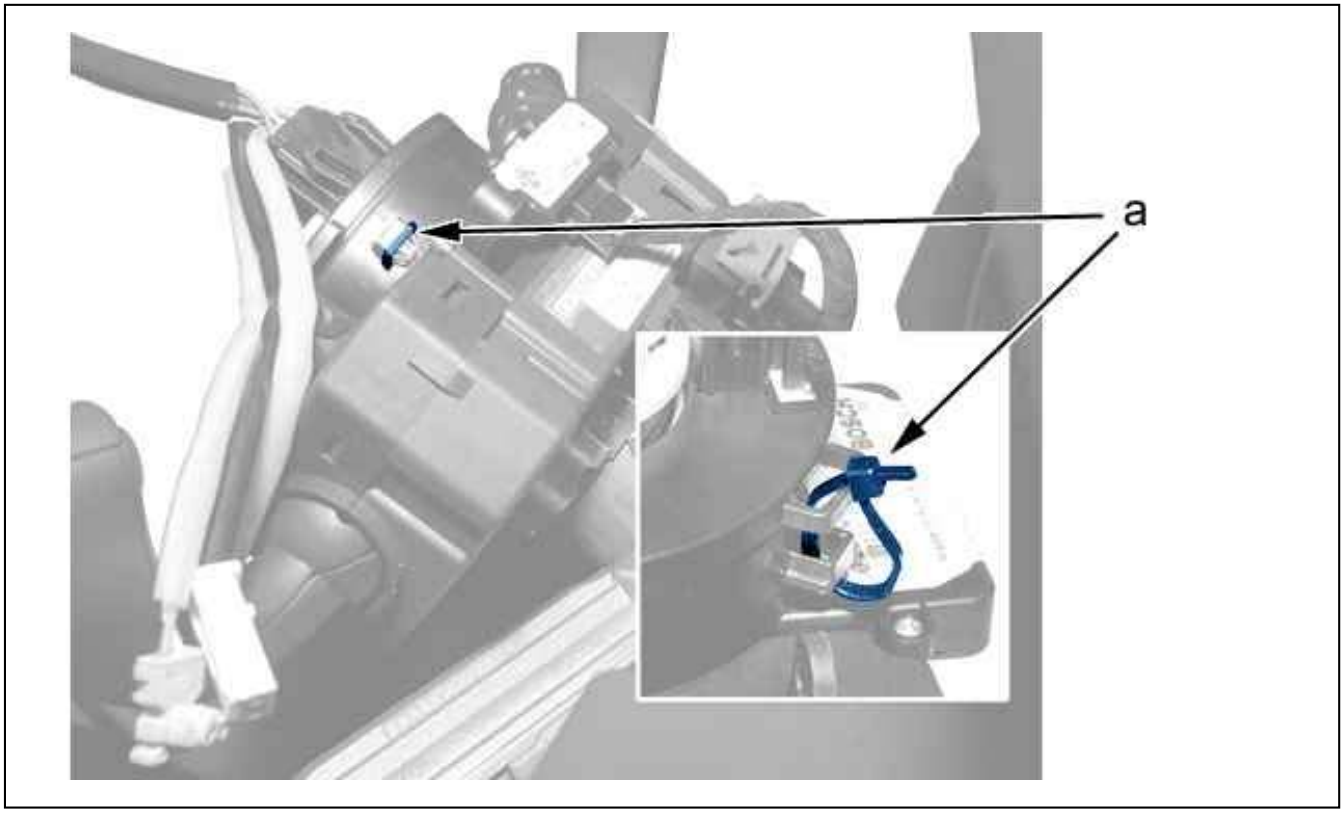

Figure : C5FP0YTD

Fit a plastic collar to maintain the position of the rotary switch (at "a").

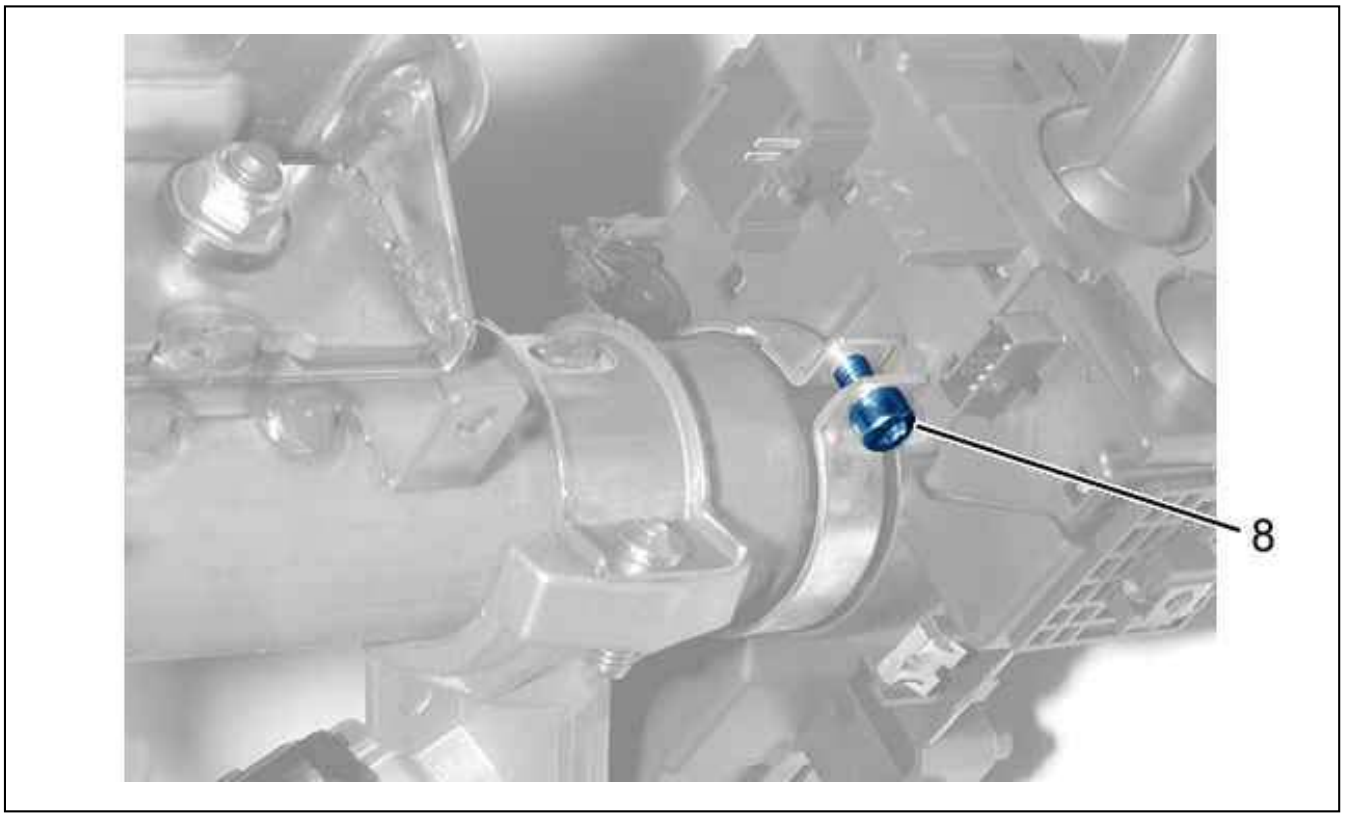

Figure : B3EP18ND

Remove bolts (8).

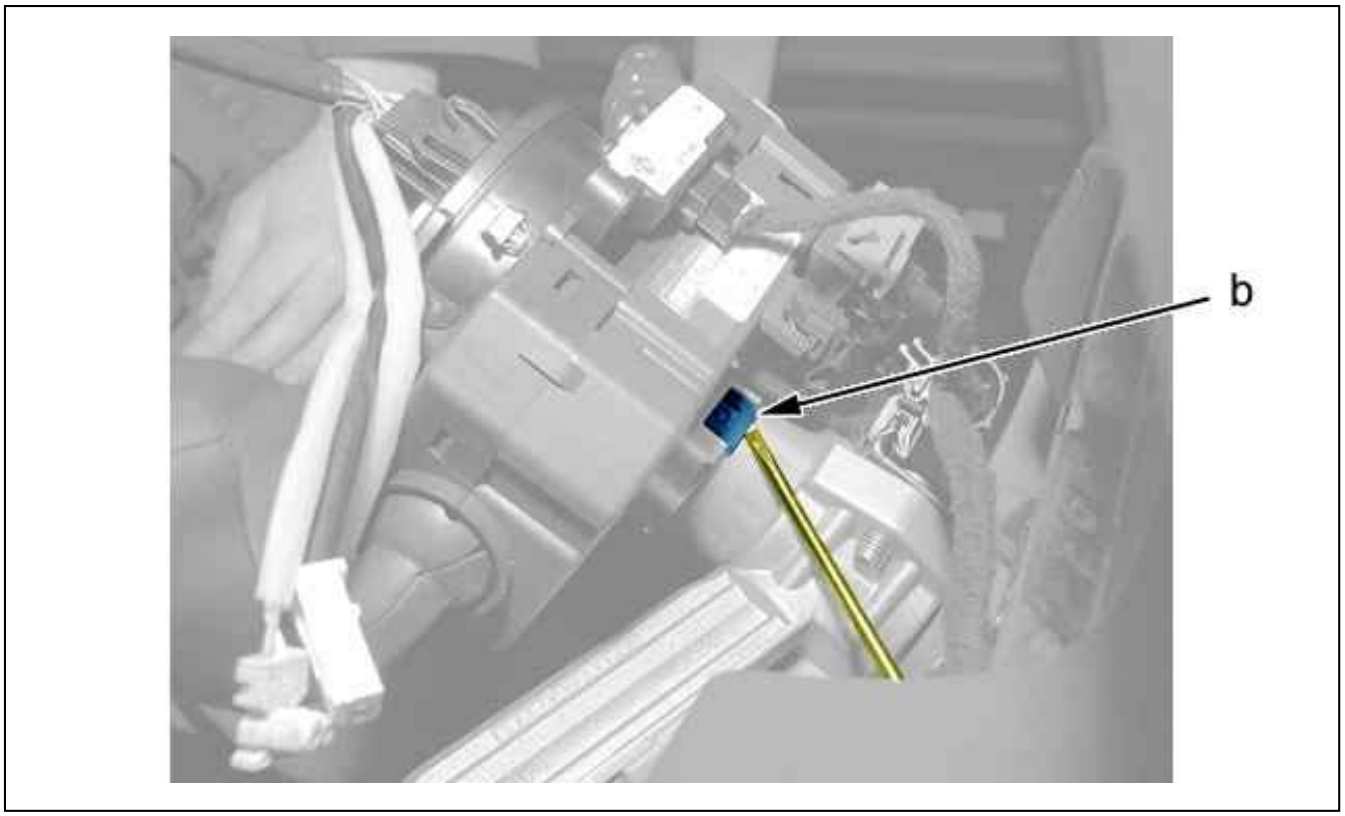

Figure : C5FP0YZD

Detach the assembly of controls under the steering wheel (at "b") By means of a screwdriver.
Disengage all the controls under the steering wheel.
Disconnect the connectors .
Remove the steering wheel controls assembly .

2. Refitting

Replace the steering wheel controls assembly.
Connect the connectors .
Fit the bolt (8) ; Tighten to 0,5 ± 0,2 daN.m.
Cut and remove the plastic collar.
Refit :

- The steering column upper cowling (6)
- The (7) bolt ; Tighten to 0,2 ± 0,02 daN.m
- The bolts (5) ; Tighten to 0,2 ± 0,02 daN.m
- The lower trim on the steering column (3)
- The bolts (4) ; Tighten to 0,2 ± 0,02 daN.m
- The bolts (2) ; Tighten to 0,2 ± 0,02 daN.m
- The lower panel (1) (see the relevant operation)
- The steering wheel (see the relevant operation)

Reconnect the battery.
Check that the steering wheel electrical controls operate correctly.

REMOVING - REFITTING : STEERING COLUMN

ESSENTIAL : Observe the safety and cleanliness recommendations .

1. Removing

Disconnect the battery.
Put the wheels in the straight ahead position.
Remove :

- The steering wheel
- The controls under the steering wheel

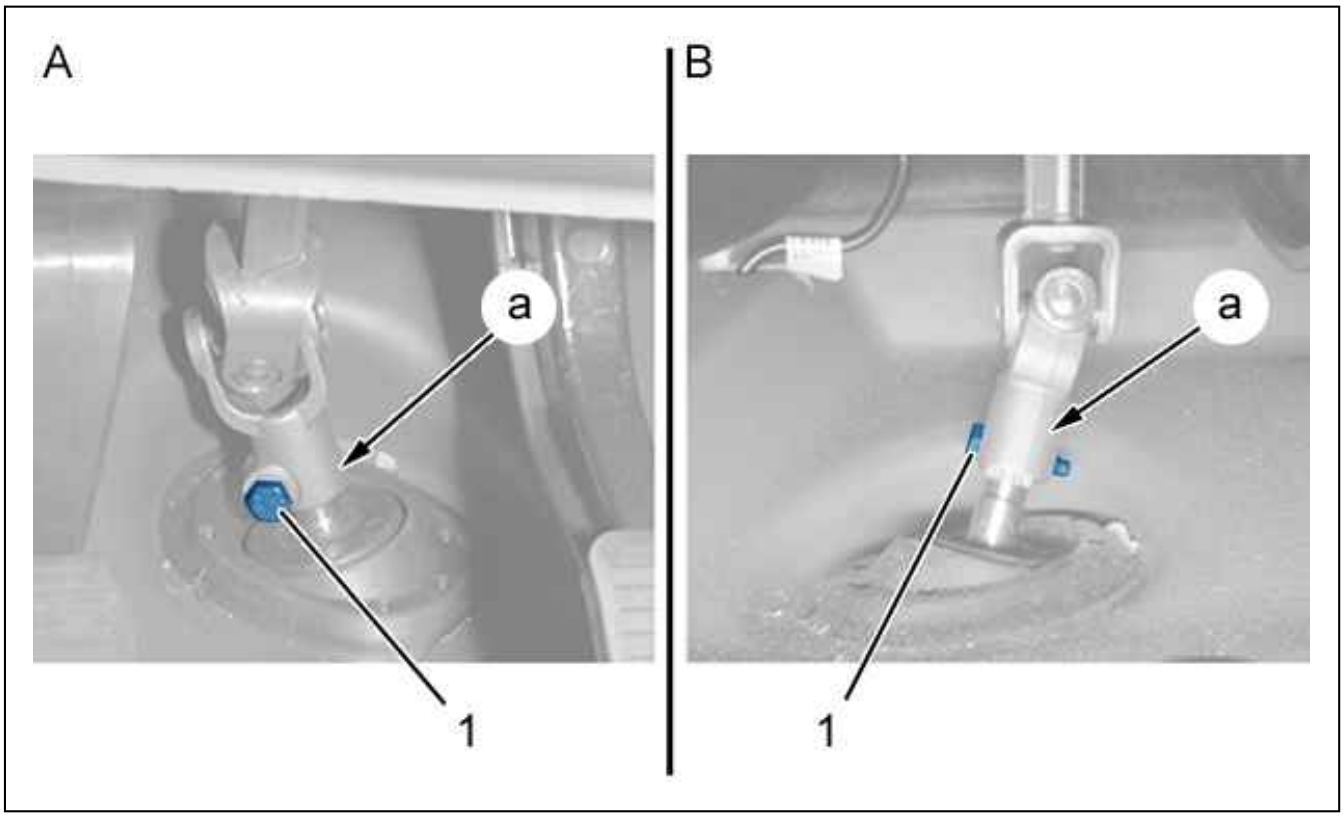

Figure : B3EG0JOD

Fitting A : Left-hand drive .
Fitting B : Right-hand drive .
Remove the bolt (1).
Disengage and push the lower part of the steering column upwards (at "a").

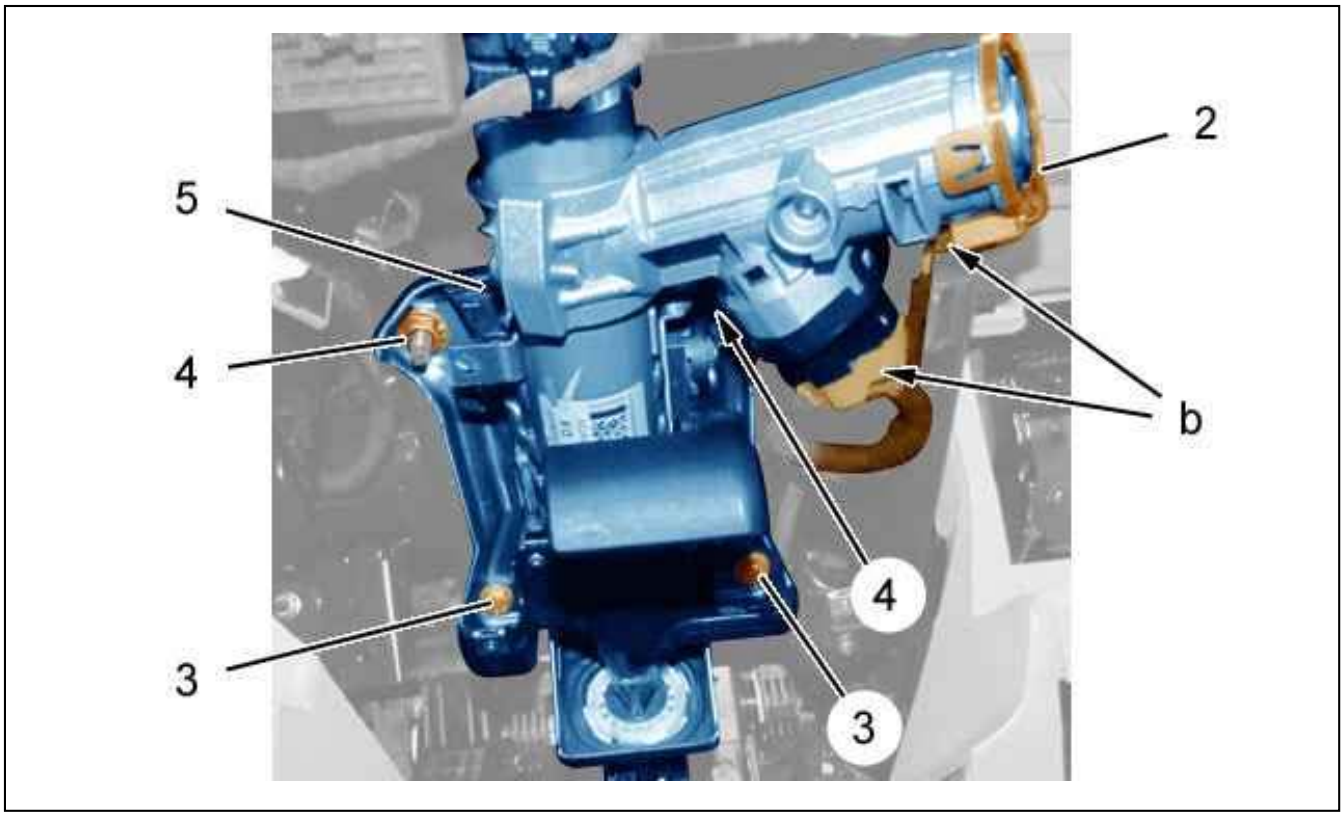

Figure : B3EG0JPD

Unplug :

- The connectors (at "b")
- The transponder aerial (2)

Remove :

- The bolts (3)
- The nuts (4)
- The steering column (5)

2. Refitting

CAUTION : Adhere to the tightening torques .

Refit :

- The steering column (5)
- The nuts (4) (without tightening them)
- The bolts (3)

Tighten :

- The bolts (3)
- The nuts (4)

Couple the steering column (lower part) (at "a").
Fit a new bolt (1) coated with threadlock loctite.
Connect :

- The transponder aerial (2)
- The connectors (at "b")

Refit :

- The controls under the steering wheel
- The steering wheel

CAUTION : Perform the operations to be carried out following reconnection of the battery.

Reconnect the battery.
Check that the steering wheel electrical controls operate correctly.

REMOVING - REFITTING : STEERING MECHANISM

1. Recommended tools

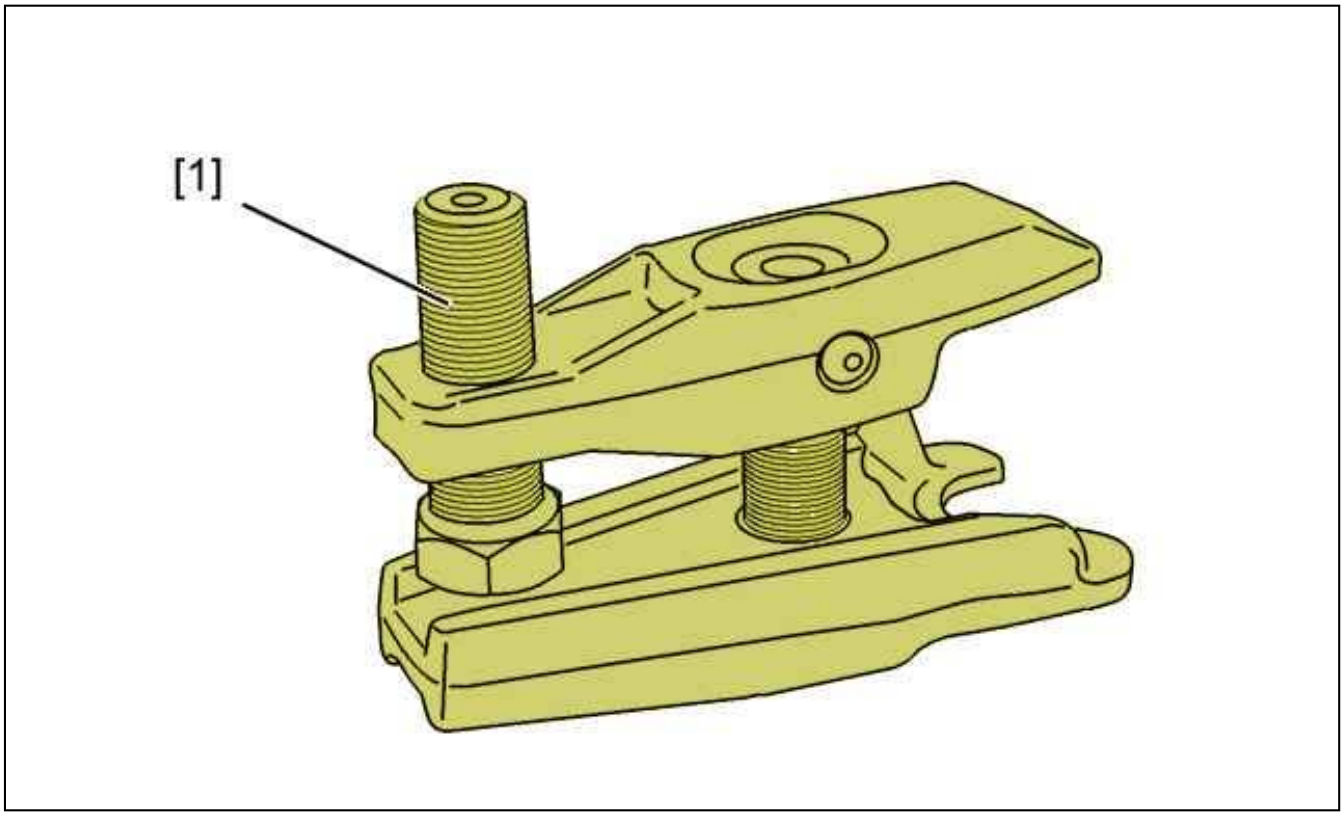

Figure : E5AP2WYD

Reference	Designation	Reference	Reference
[1]	ball-joint extractor	5707-T	(-).0919

2. Removing

Disconnect the battery negative terminal.
Untighten the wheel screws (front).
Lift and support the front of the vehicle.
Remove the front wheels ..

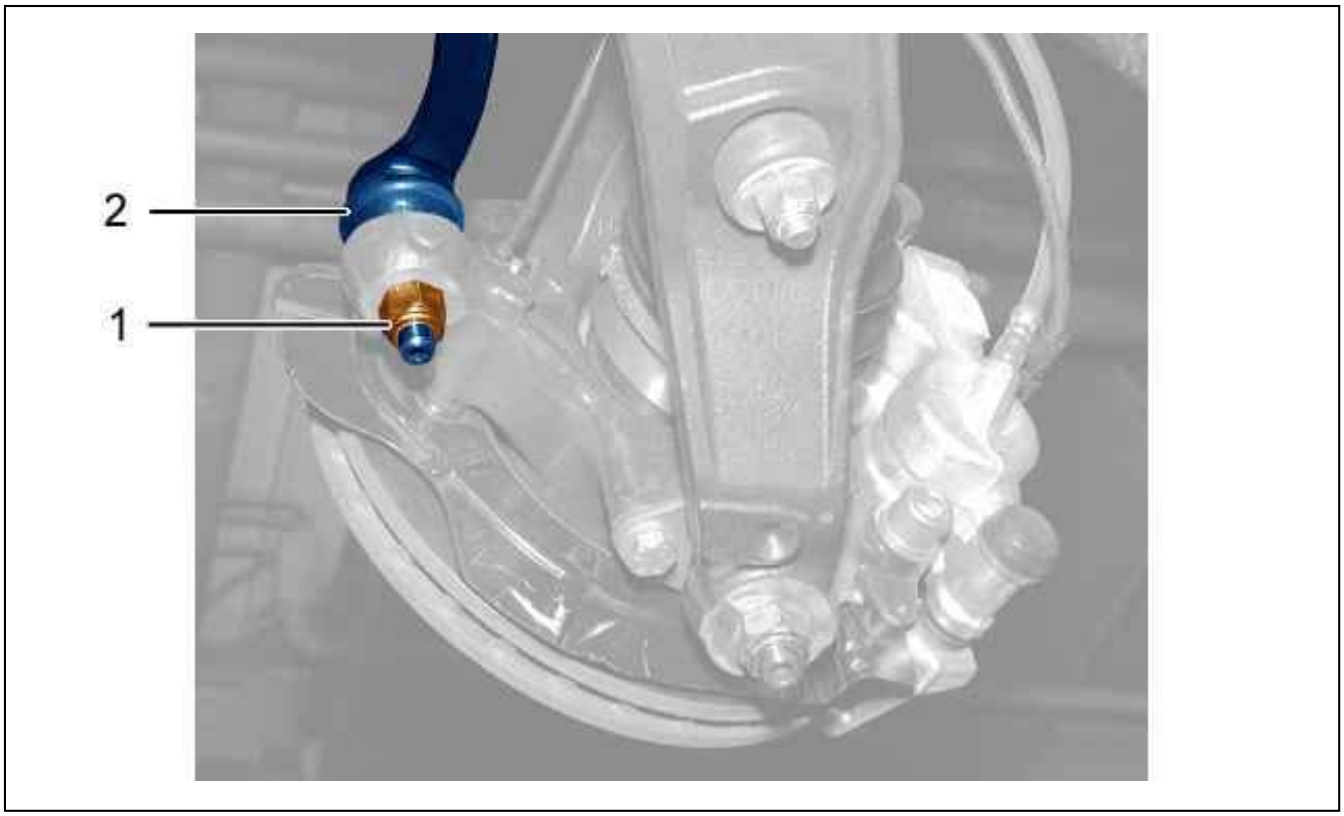

Figure : B3FP7JJD

Remove the nut (1) (on each side).
Uncouple the steering ball-joint (2) ; Using tool [1] (on each side).

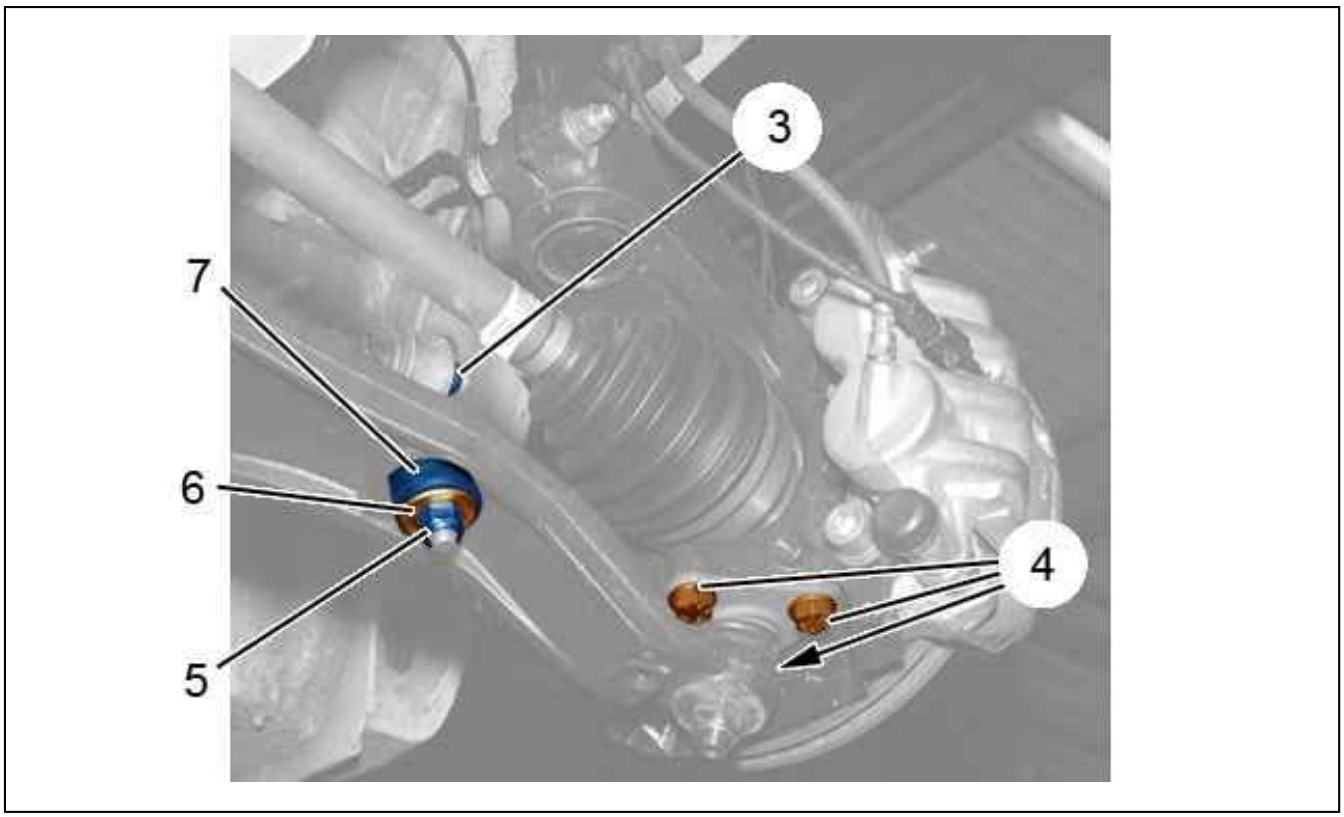

Figure : B3BP1CPD

Unscrew nut (3) (on each side).

Remove (on each side) :

- The nut (5)
- The washer (6)
- The silentblock (7)
- The 3 bolts (4)

Move aside the hub carrier (on each side).
Drain the steering assistance circuit (see the relevant operation).

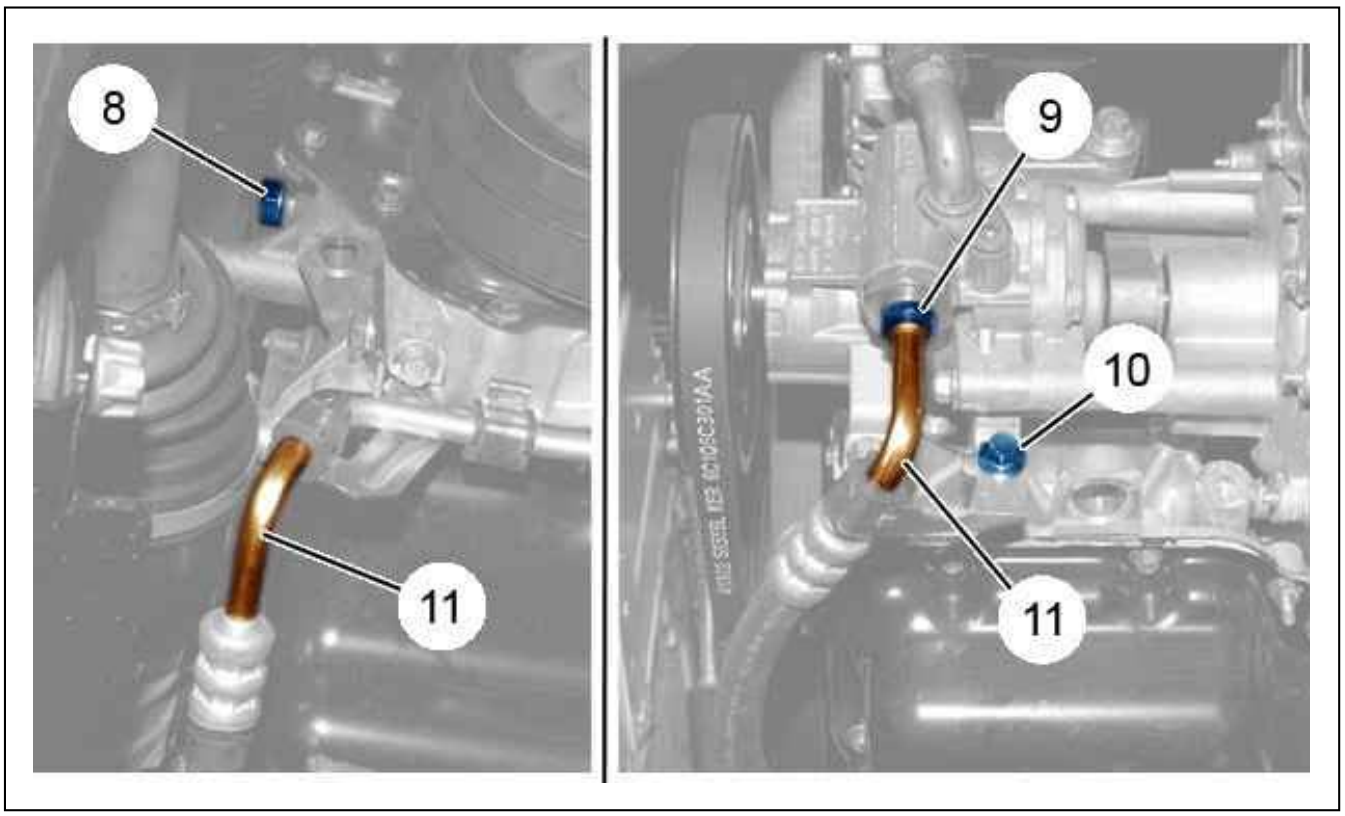

Figure : B1BPRRKD

Uncouple the high pressure pipe union (9).
Remove bolts (8), (10).
Move aside the piping (11) without distorting it.

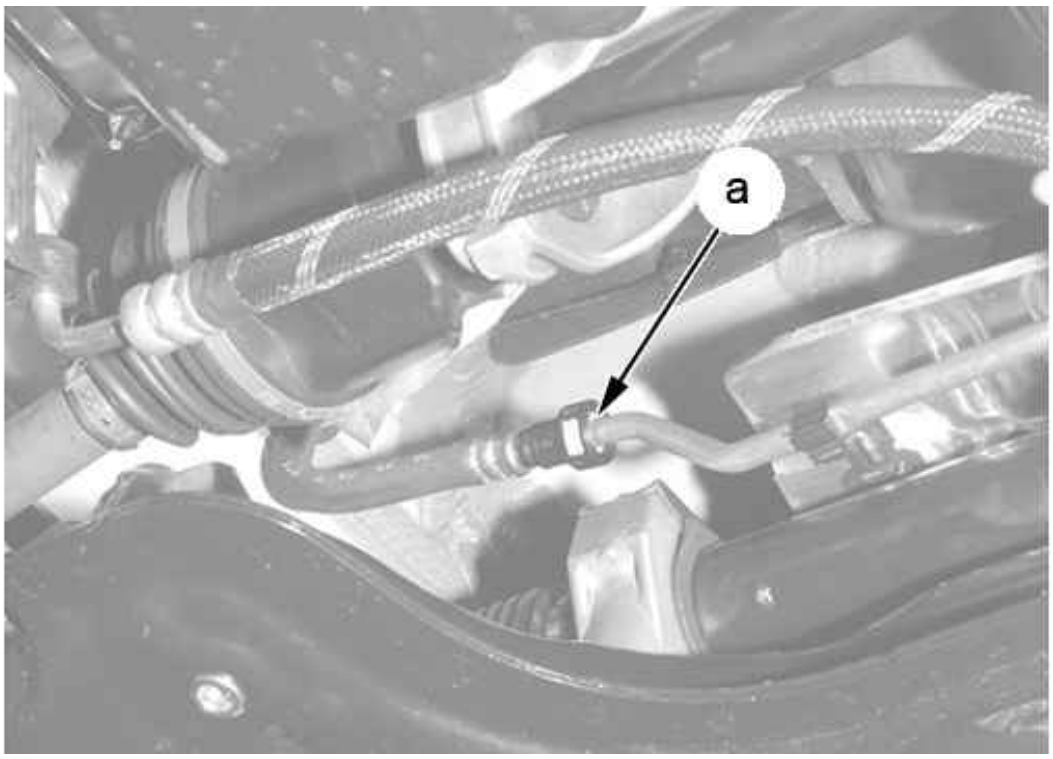

Figure : B3FP7KXD

Uncouple the low pressure pipe (at "a").
Close the hydraulic unit openings using caps.
Disconnect the power steering regulated electrovalve connector (if necessary).

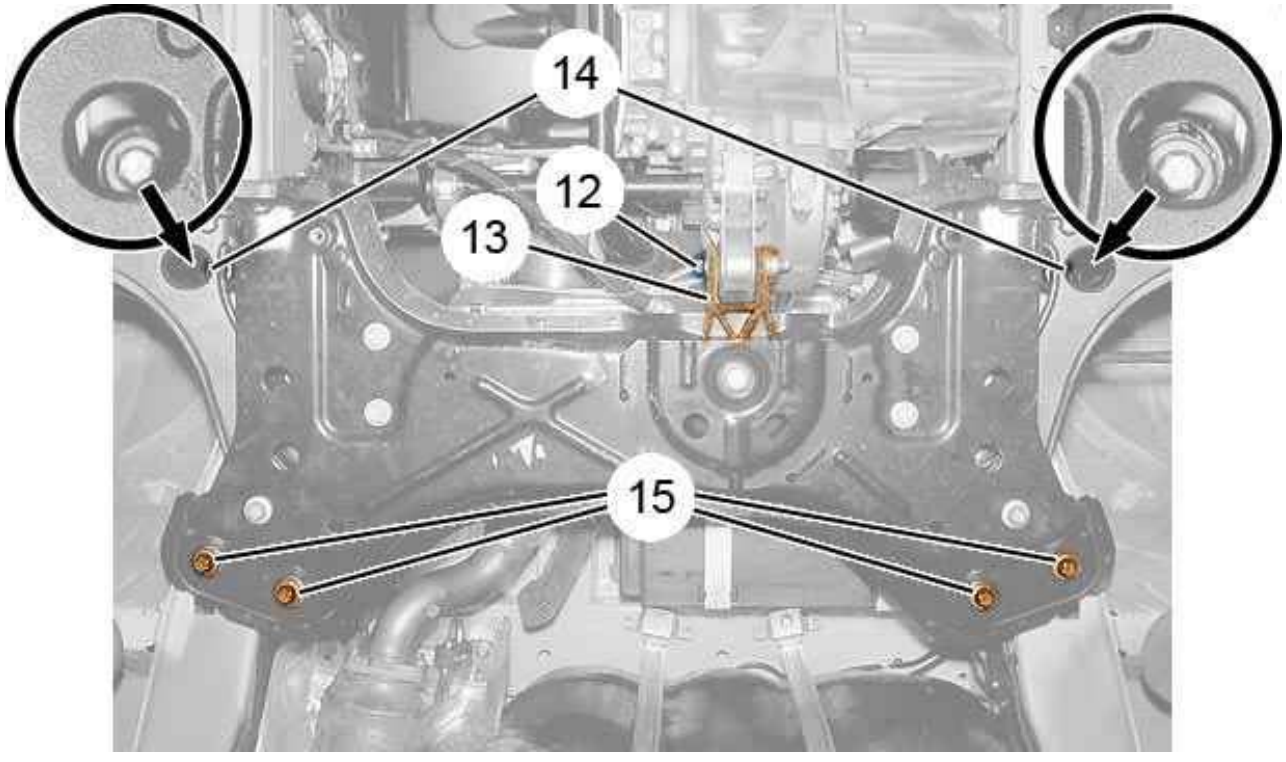

Figure : B3CP0BGD

Remove bolts (12).
Move aside the torque reaction rod (13) from the front subframe.
Position a lifting tool to retain the front sub-frame.
Remove :

- The bolts (14)
- The bolts (15)
- The front subframe and steering mechanism assembly

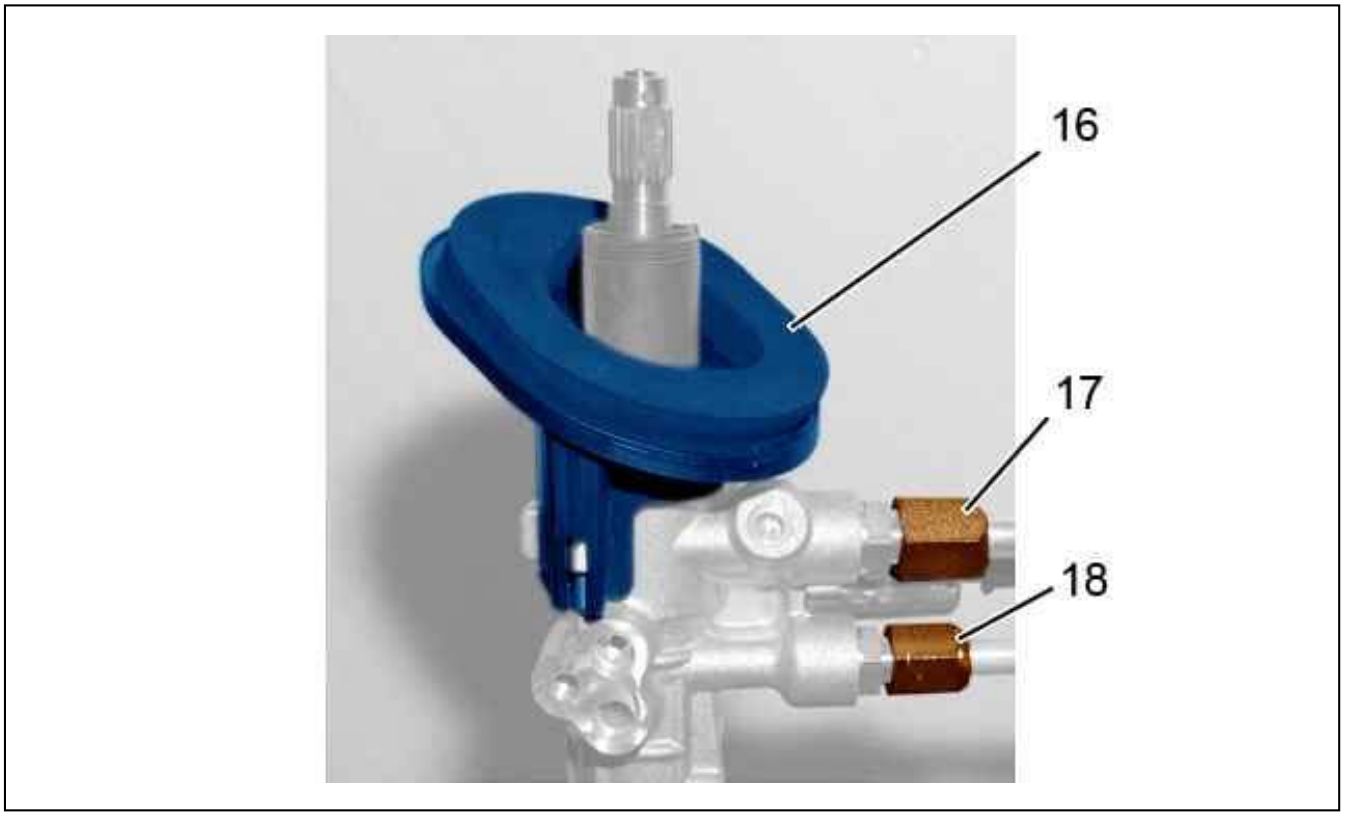

Figure : B3EP18RD

Remove the protector (16).
Uncouple :

- The high pressure pipe union (18)
- The low pressure pipe union (17)

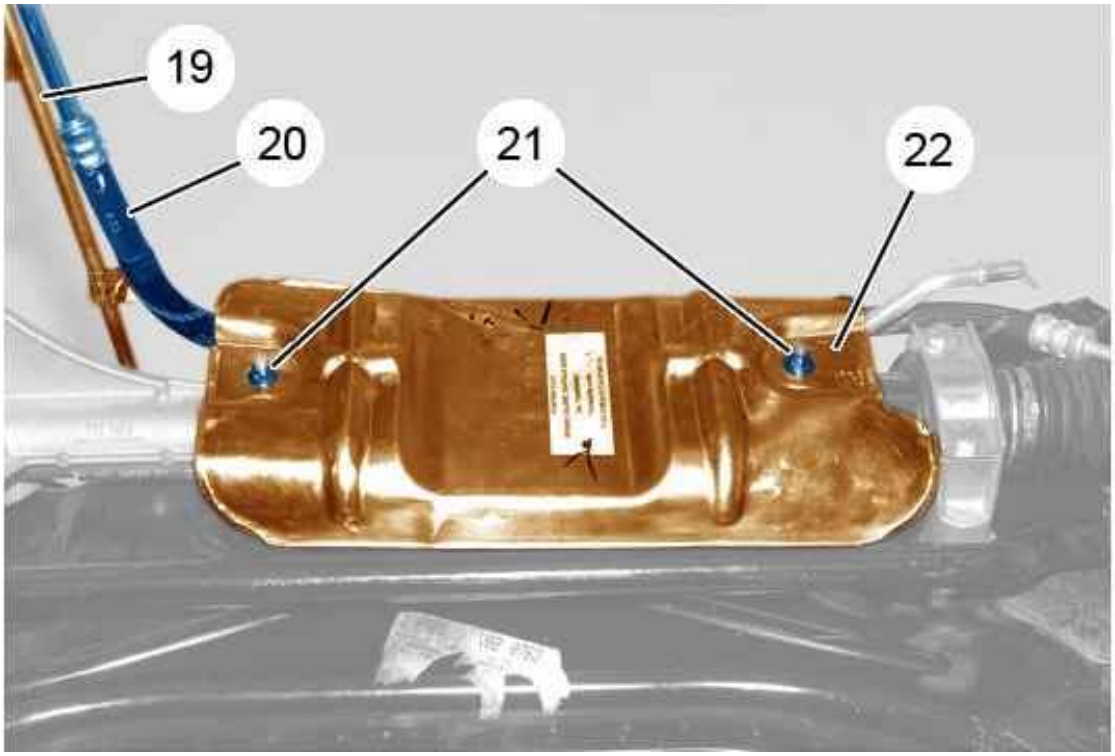

Figure : B3EP18SD

Remove :

- The nuts (21)
- The thermal protector (22)
- The high pressure pipe (19)
- The low pressure pipe (20)

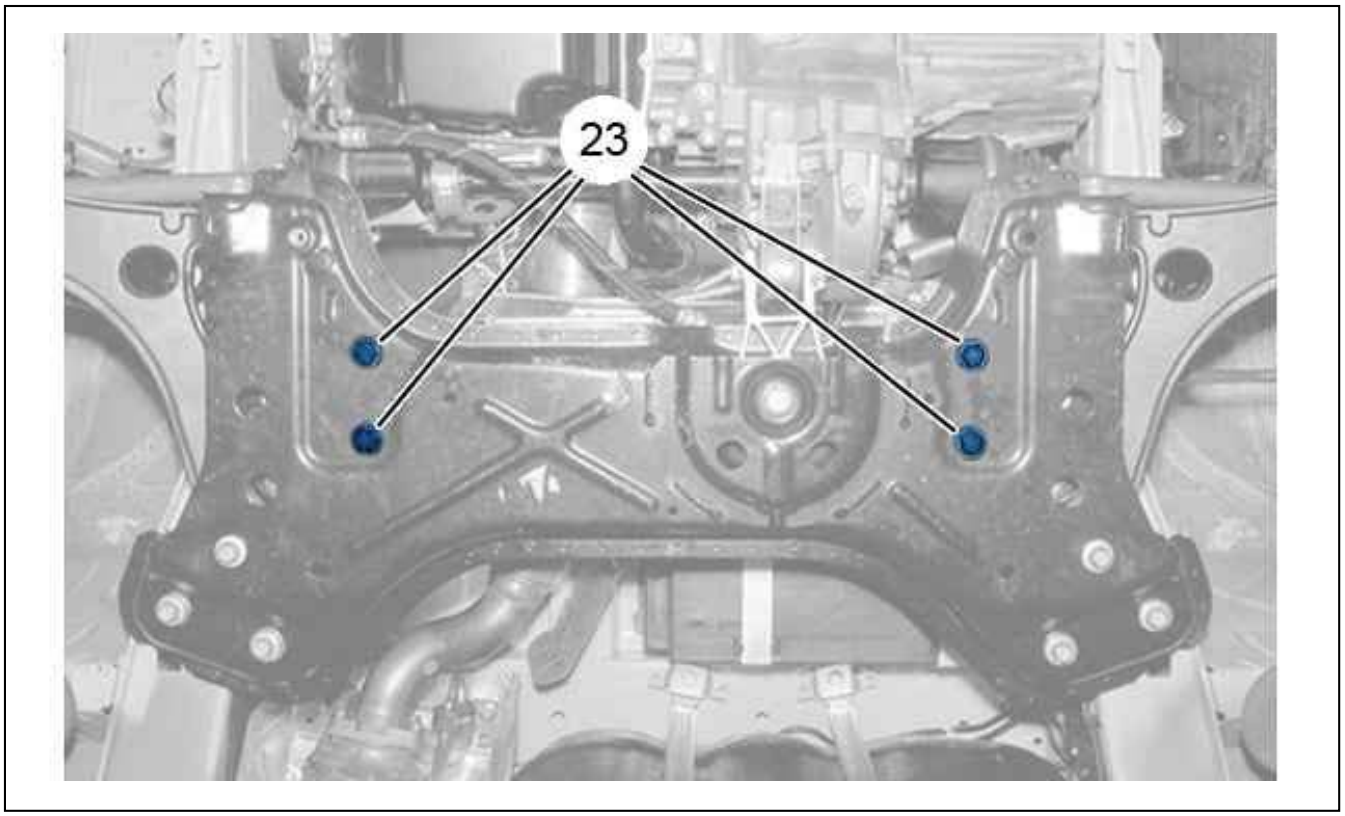

Figure : B3CP0BHD

Remove the bolts (23).
Uncouple the steering mechanism.

3. Refitting

N.B. : Always fit new Nylstop nuts.

Couple the steering mechanism.
Refit the bolts (23) ; Tighten to 11 ± 1,4 daN.m.
Fit the protector (16) (new).
Refit :

- The low pressure pipe (20)
- The high pressure pipe (19)
- The thermal protector (22)
- The nuts (21) ; Tighten to 0,6 ± 0,17 daN.m

Couple up :

- The high pressure pipe union (18) ; Tighten to 5,5 ± 0,7 daN.m
- The low pressure pipe union (17) ; Tighten to 6,3 ± 0,8 daN.m

Position the front subframe and steering mechanism assembly on the body.
Refit :

- The bolts (14) ; Tighten to 29 ± 1 daN.m
- The bolts (15) ; Tighten to 29 ± 1 daN.m

Engage the torque reaction rod (13) on the front subframe.
Refit bolt (12) ; Tighten to 29 ± 8 daN.m.
Couple up :

- The low pressure pipe (at "a")
- The high pressure pipe union (9) ; Tighten to 2,7 ± 0,2 daN.m

Refit :

- The (8) bolt ; Tighten to 2 ± 0,2 daN.m
- The (10) bolt ; Tighten to 2,2 ± 0,2 daN.m

Connect the power steering regulated electrovalve connector (if necessary).
Position the hub carrier lower ball joint (on each side).
Refit (on each side) :

- The 3 bolts (4) ; Tighten to 11,5 ± 0,4 daN.m
- The silentblock (7)
- The washer (6)
- The nut (5)

Couple up the steering ball-joint (2) (on each side).
Refit the nut (1) ; Tighten to 8 ± 0,7 daN.m (on each side).
Fit the wheels.
Return the vehicle to its wheels.
Tighten (on each side) :

- The nut (3) to 5,6 ± 0,5 daN.m
- The nut (5) to 5,6 ± 0,5 daN.m

Tighten the wheel bolts (depending on the version) :

- 15 inch wheels : 16 ± 2,2 daNm
- 16 inch wheels : 18 ± 2,4 daNm

Reconnect the battery negative terminal.
Fill and bleed the power steering system (see the relevant operation).

DRAIN AND REFILL - REFILLING - BLEEDING : POWER STEERING CIRCUIT

1. Drain and refill

Unscrew the power steering reservoir cap .
Raise the vehicle and support on axle stands, wheels free.

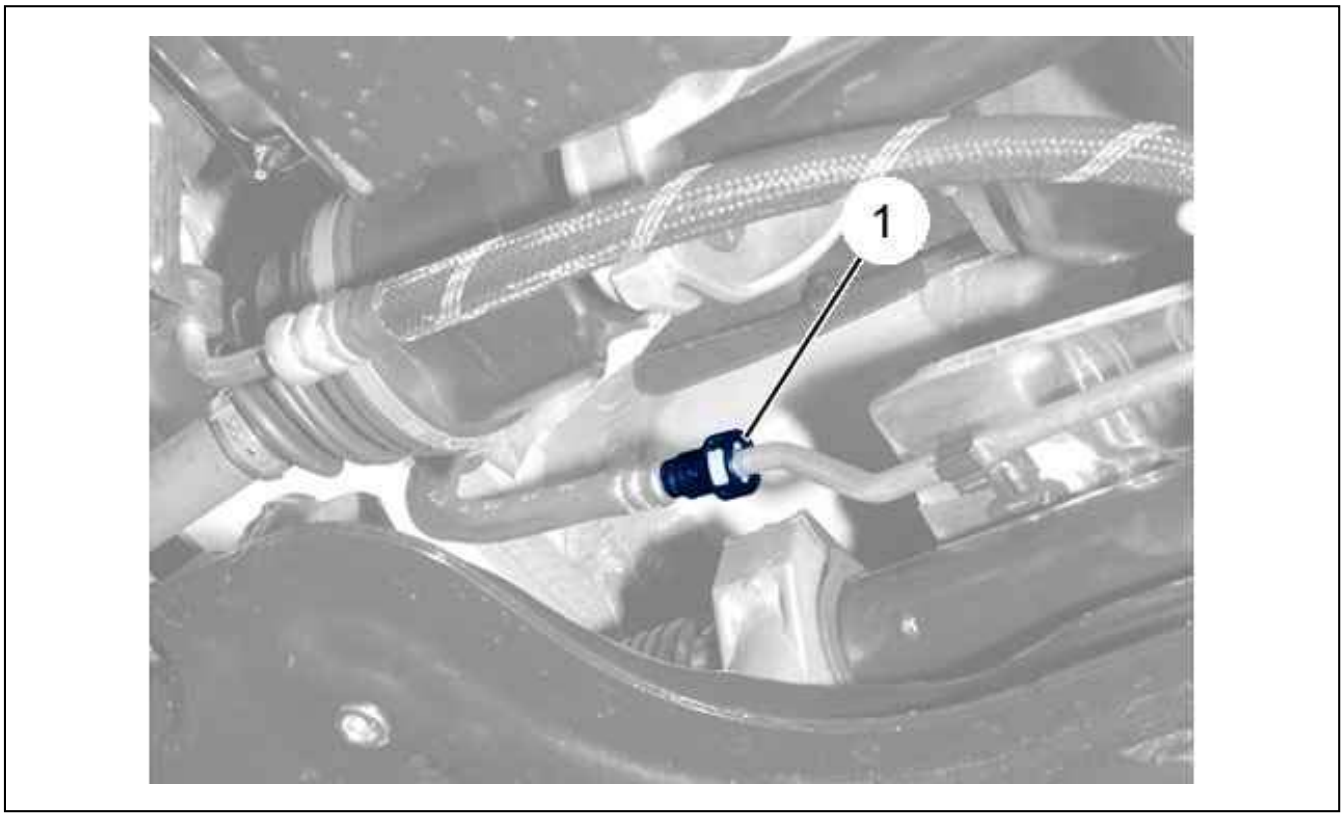

Figure : B3FP7NUD

Uncouple the low pressure pipe union (1).
Turn the steering in both directions, from lock to lock.
Recover the power steering fluid.
Plug the low pressure pipe union (1).

N.B. : Do not re-use the power steering fluid.

2. Refilling

Use fresh power steering fluid.
Oil quality : TUTELLA GI/E.

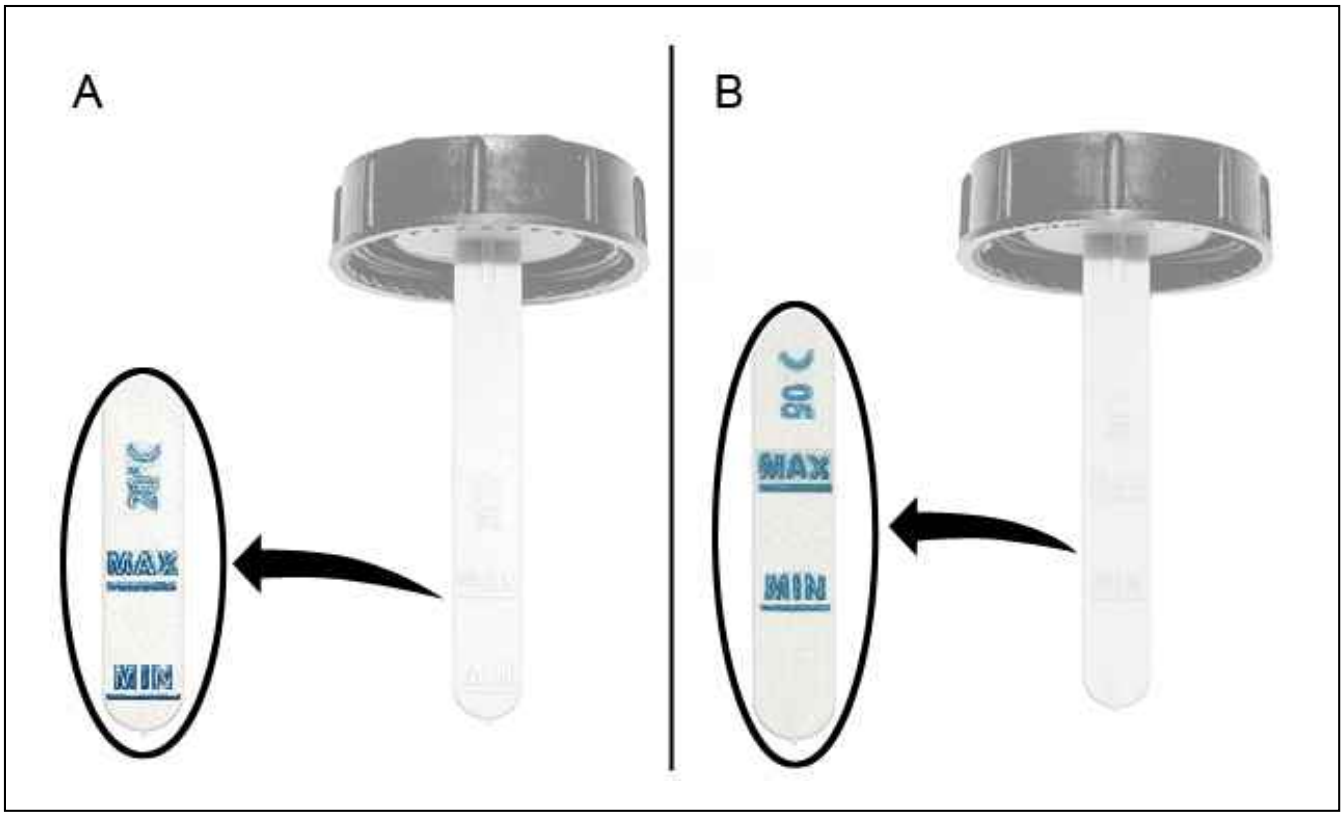

Figure : B3EP19CD

"A" : Power steering fluid level when cold (20 °C).
"B" : Power steering fluid level when warm (90 °C).
Fill the power steering fluid reservoir to the maximum level.

3. Bleeding

N.B. : Return the vehicle to its wheels.

Engine stopped :

- Fill the power steering fluid reservoir to the maximum level (If necessary)
- Turn the steering in both directions, from lock to lock (3 times minimum)
- Top up the power steering fluid to the maximum level (If necessary)

engine running :

- Wait one minute
- Top up the power steering fluid to the maximum level (If necessary)
- Move the steering from lock to lock, until there is no point of resistance

Stop the engine.
Top up the power steering fluid to the maximum level.
Check there are no leaks.

TIGHTENING TORQUES : SUSPENSION

1. Front suspension

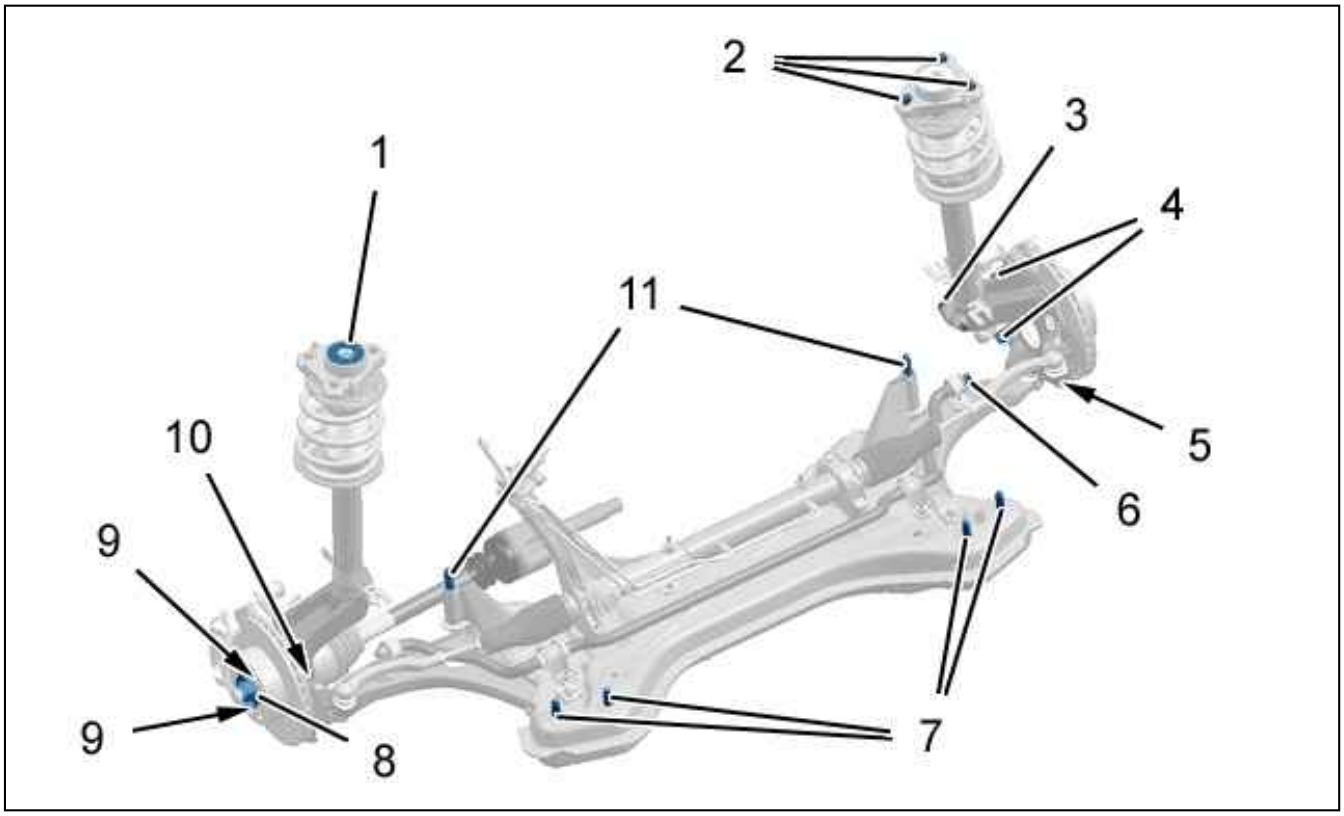

Figure : B3BB04QD

Reference	Designation	Tightening torque
(1)	nut - Damper rod	9 daNm
(2)	Fixing bolts for front strut on body	6 daNm
(3)	bolts - Damper on front hub carrier	12 daNm
(4)	bolts - Yoke on brake caliper	21 daNm
(5)	nut - Steering ball joint on front hub carrier	8 daNm
(6)	nut - Anti-roll bar transfer bar	5,6 daNm
(7)	Rear bolts - Front subframe	29 daNm
(8)	Hub nut	15 daNm+ 35°
(9)	bolts - Front brake disc	1,2 daNm
(10)	bolts - Front wheel sensor	0,8 daNm
(11)	Front bolts - Front subframe	29 daNm

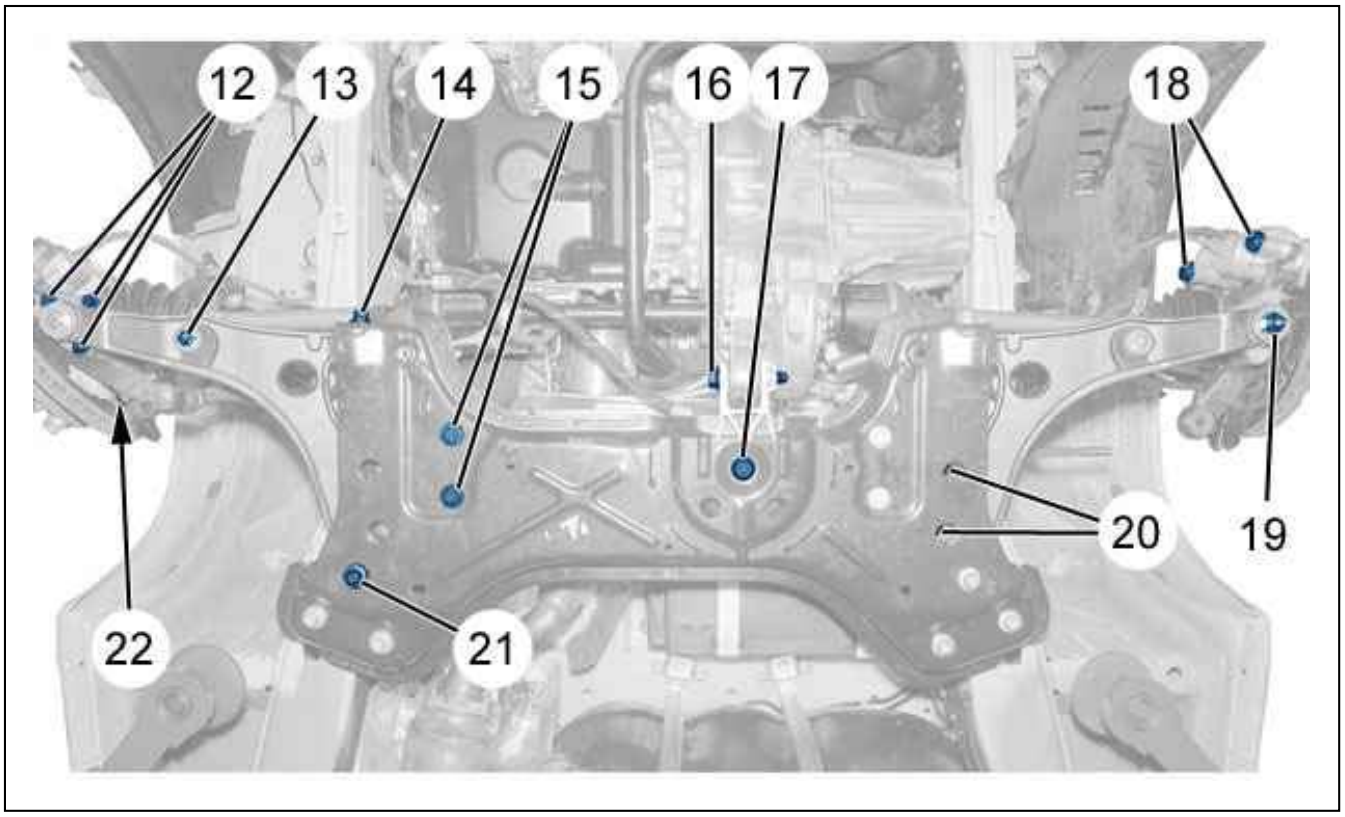

Figure : B3CP0C0D

Reference	Designation	Tightening torque
(12)	bolts - Front hub carrier ball-joint	11,5 daNm
(13)	nut - Anti-roll bar transfer bar	5,6 daNm
(14)	Horizontal bolt - Suspension arm on front subframe	32 daNm
(15)	bolts - Steering mechanism	11 daNm
(16)	bolts - Torque reaction rod on gearbox	29 daNm
(17)	bolts - Torque reaction rod on front subframe	29 daNm
(18)	bolts - front brake caliper	3,4 daNm
(19)	nut - Hub carrier ball joint on suspension arm	15 daNm
(20)	Anti-roll bar bearing fixing on front subframe	5 daNm
(21)	Vertical bolt - Suspension arm on front subframe	32 daNm
(22)	bolts - Heat shield on front hub carrier	2,5 daNm

2. Rear suspension

2.1. With metallic suspension

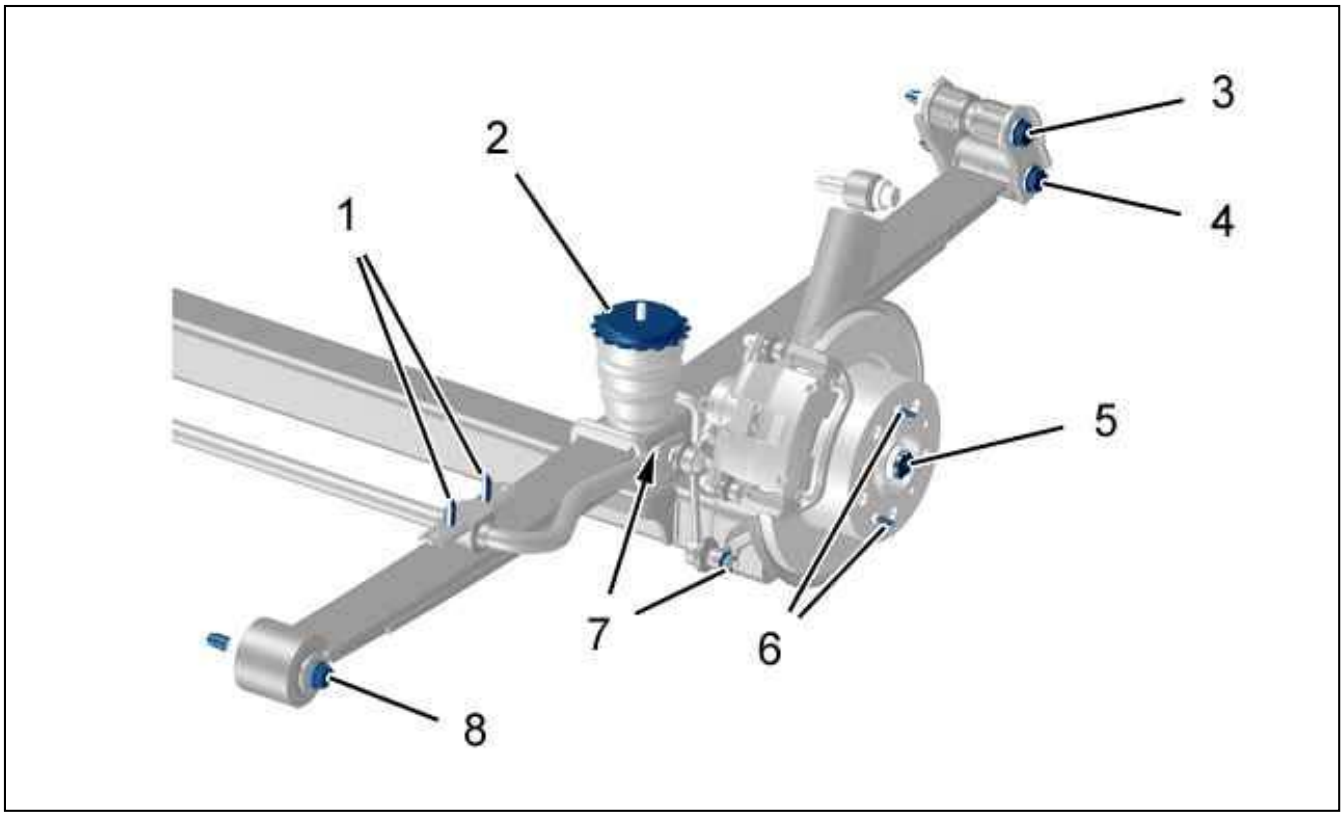

Figure : B3BB04RD

Reference	Designation	Tightening torque
(1)	bolts - Anti-roll bar bearing	19 daNm
(2)	Movement stop	3 daNm
(3)	bolts - Suspension blade yoke	14,5 daNm
(4)	bolts - Suspension blade	14,5 daNm
(5)	Hub nut	45 daNm
(6)	bolts - Rear brake disc	1,2 daNm
(7)	nuts - Anti-roll bar rod	3 daNm
(8)	bolts - Suspension blade	18,5 daNm

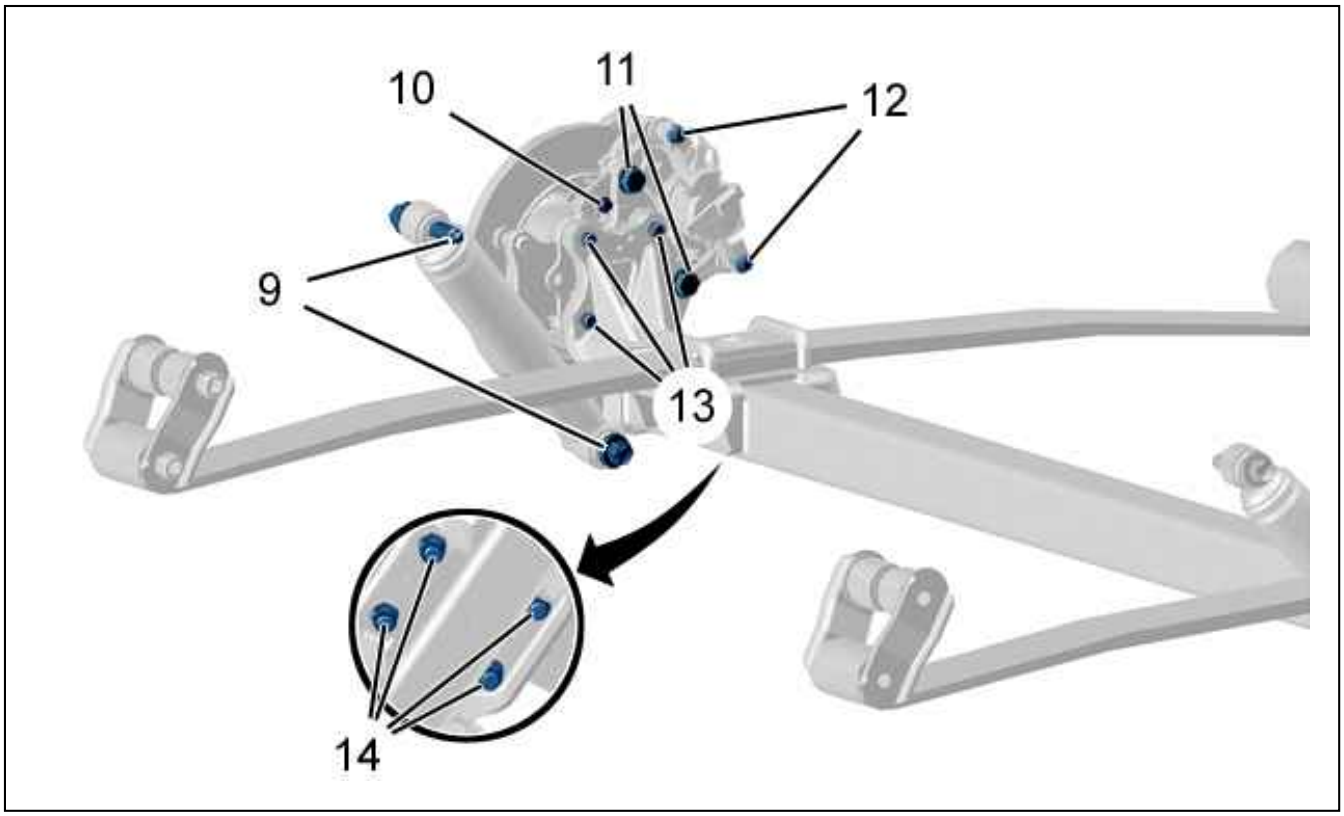

Figure : B3BB04SD

Reference	Designation	Tightening torque
(9)	bolts - Rear damper	14,5 daNm
(10)	bolts - Rear wheel sensor	0,8 daNm
(11)	bolts - Rear brake caliper yoke	16 daNm
(12)	bolts - rear brake caliper	3 daNm
(13)	bolts - Stub axle on crossmember	20 daNm
(14)	nuts - Suspension blade retaining clamp	13 daNm

2.2. With pneumatic suspension

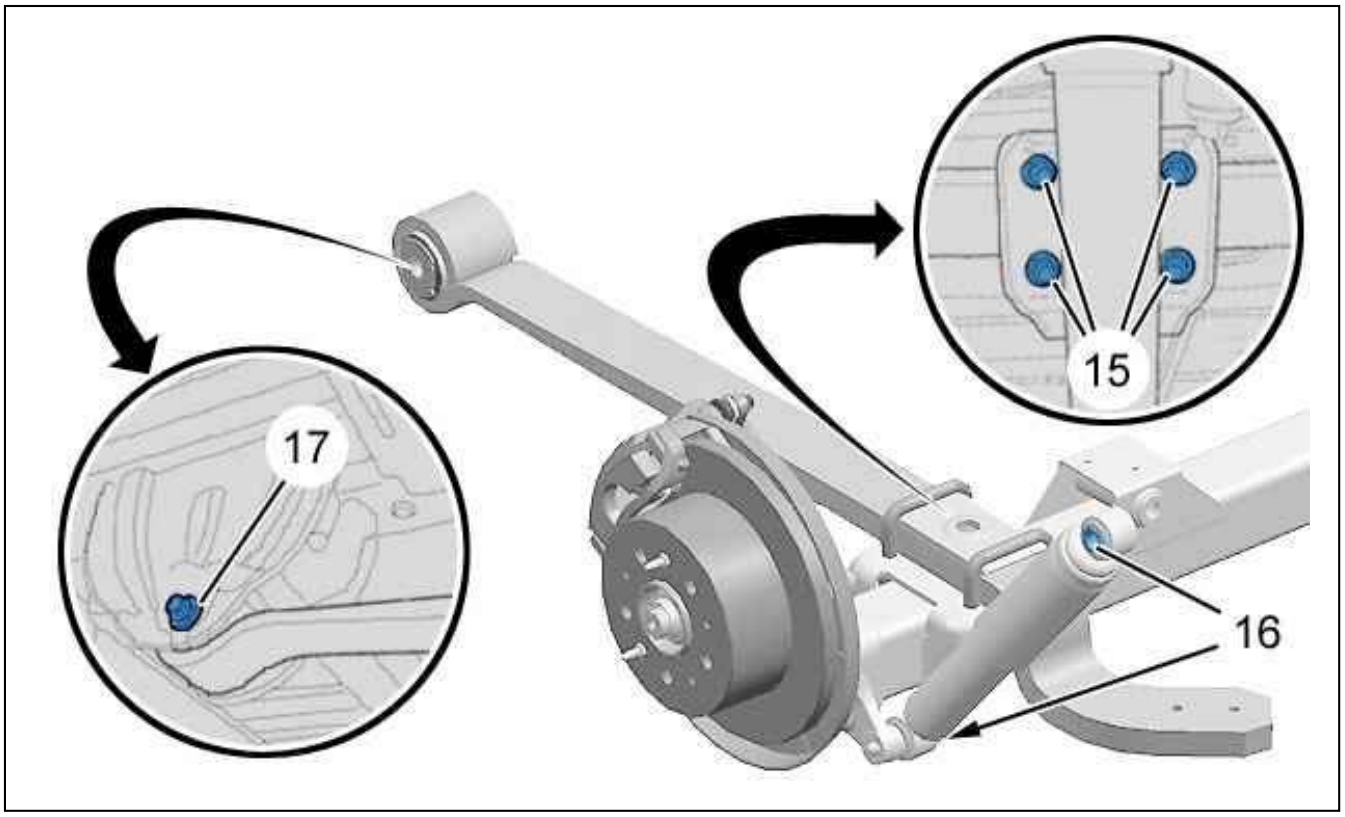

Figure : B3BB04TD

Reference	Designation	Tightening torque
(15)	nuts - Suspension blade retaining clamp	14 daNm
(16)	bolts - Rear damper	14,5 daNm
(17)	bolts - Suspension blade	18,5 daNm

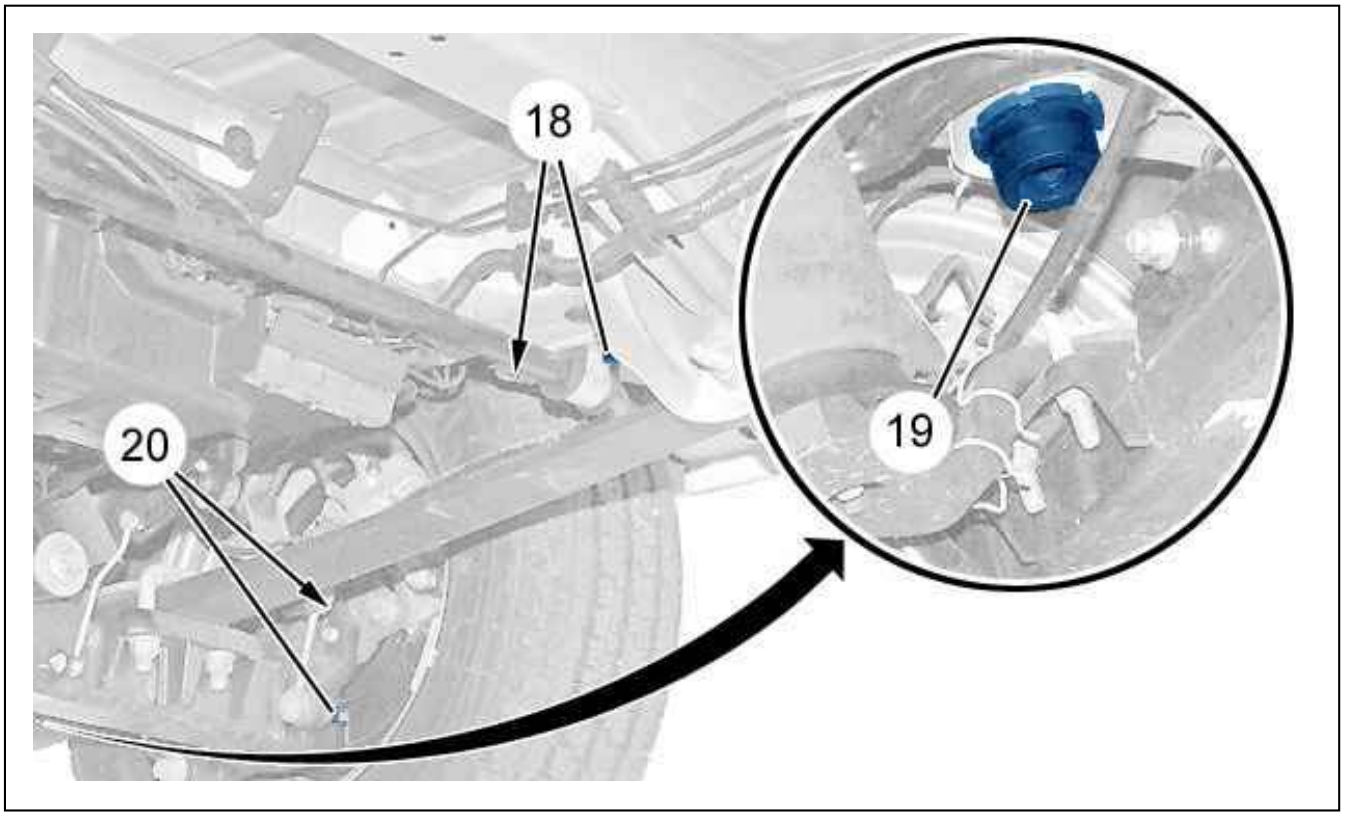

Figure : B3BB04UD

Reference	Designation	Tightening torque
(18)	bolts - Anti-roll bar bearing	4,5 daNm
(19)	Movement stop	3 daNm
(20)	nuts - Anti-roll bar rod	3 daNm

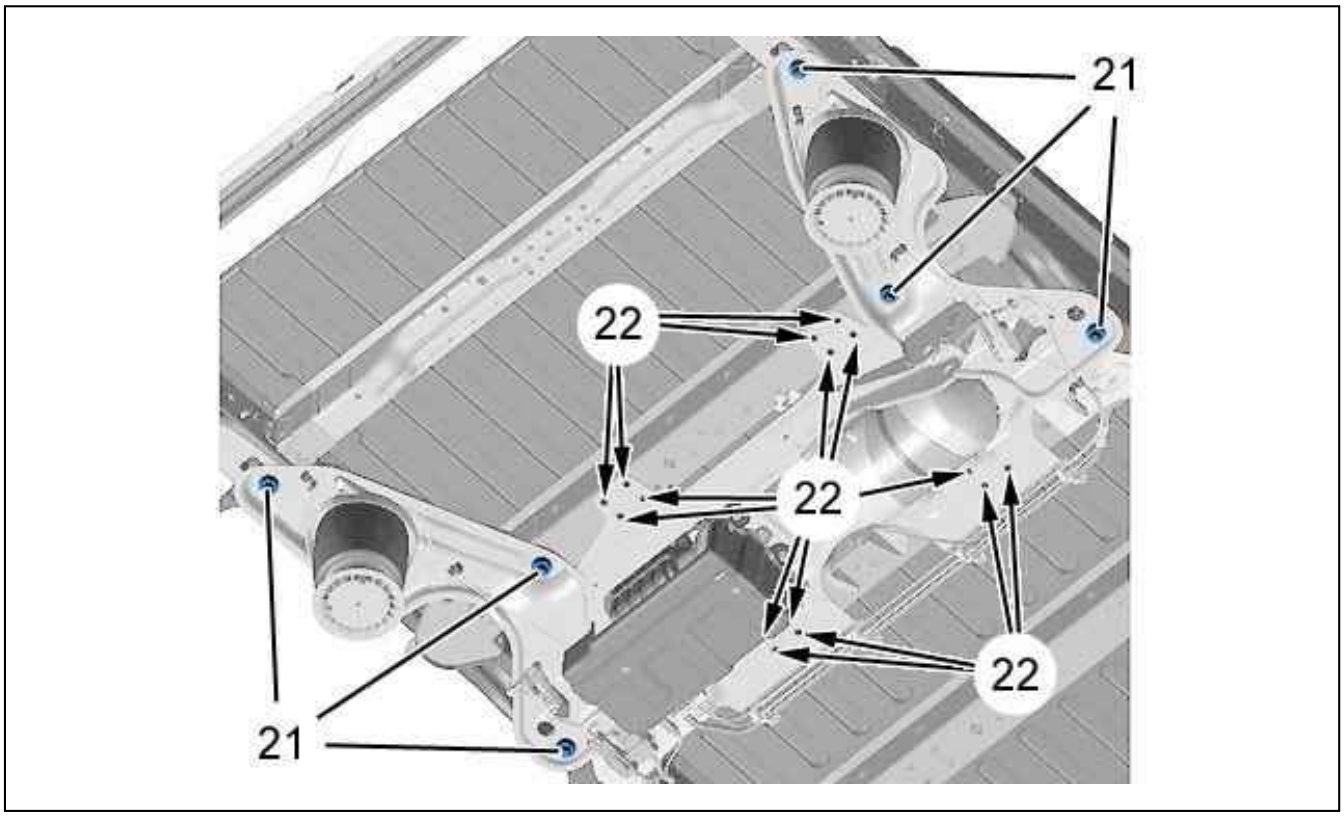

Figure : B3BB04VD

Reference	Designation	Tightening torque
(21)	Fixing on bodyshell : Support plate	18 daNm
(22)	Fixing on bodyshell : Support plate	2,4 daNm

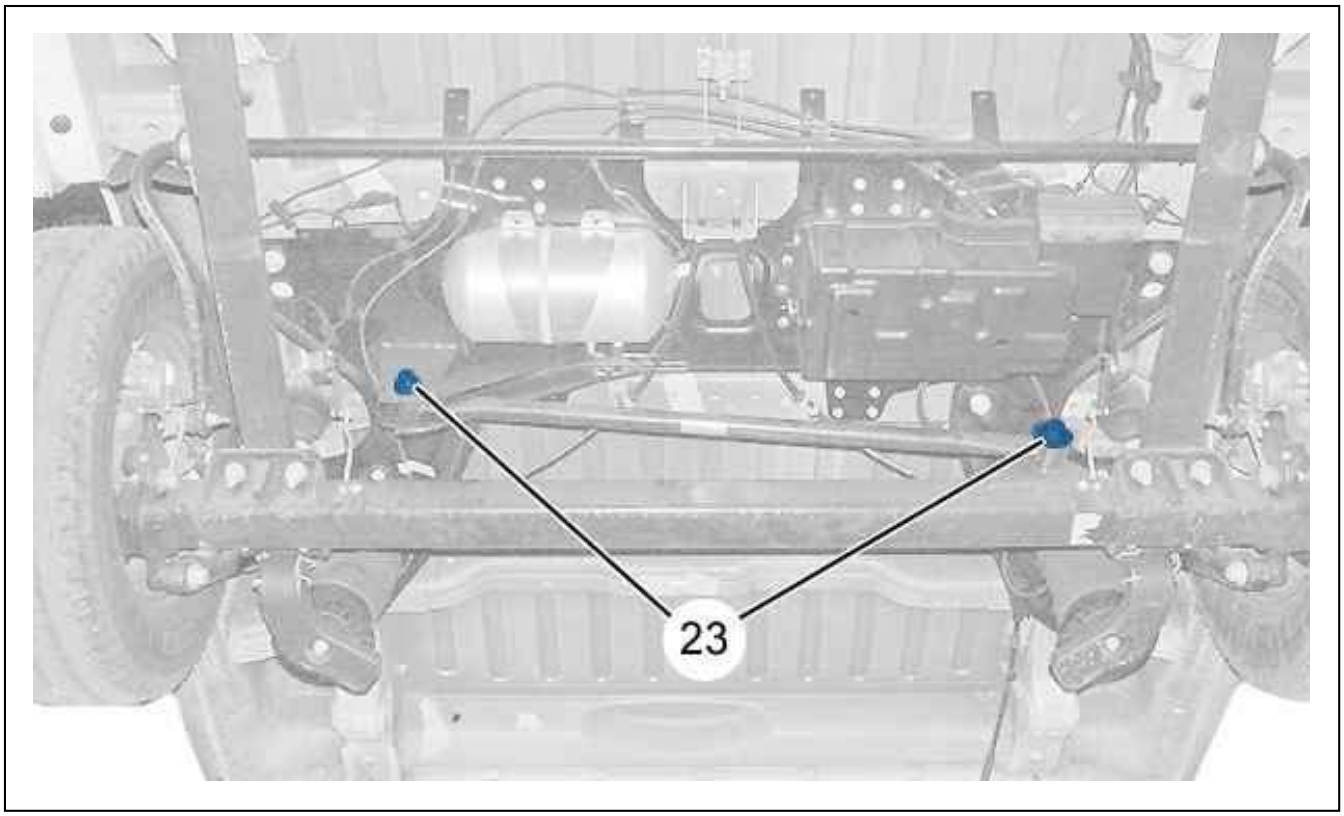

Figure : B3BB04WD

Reference	Designation	Tightening torque
(23)	fixing screws : Rear bar (Panhard)	30 daNm

3. Pneumatic suspension

3.1. Body height sensor

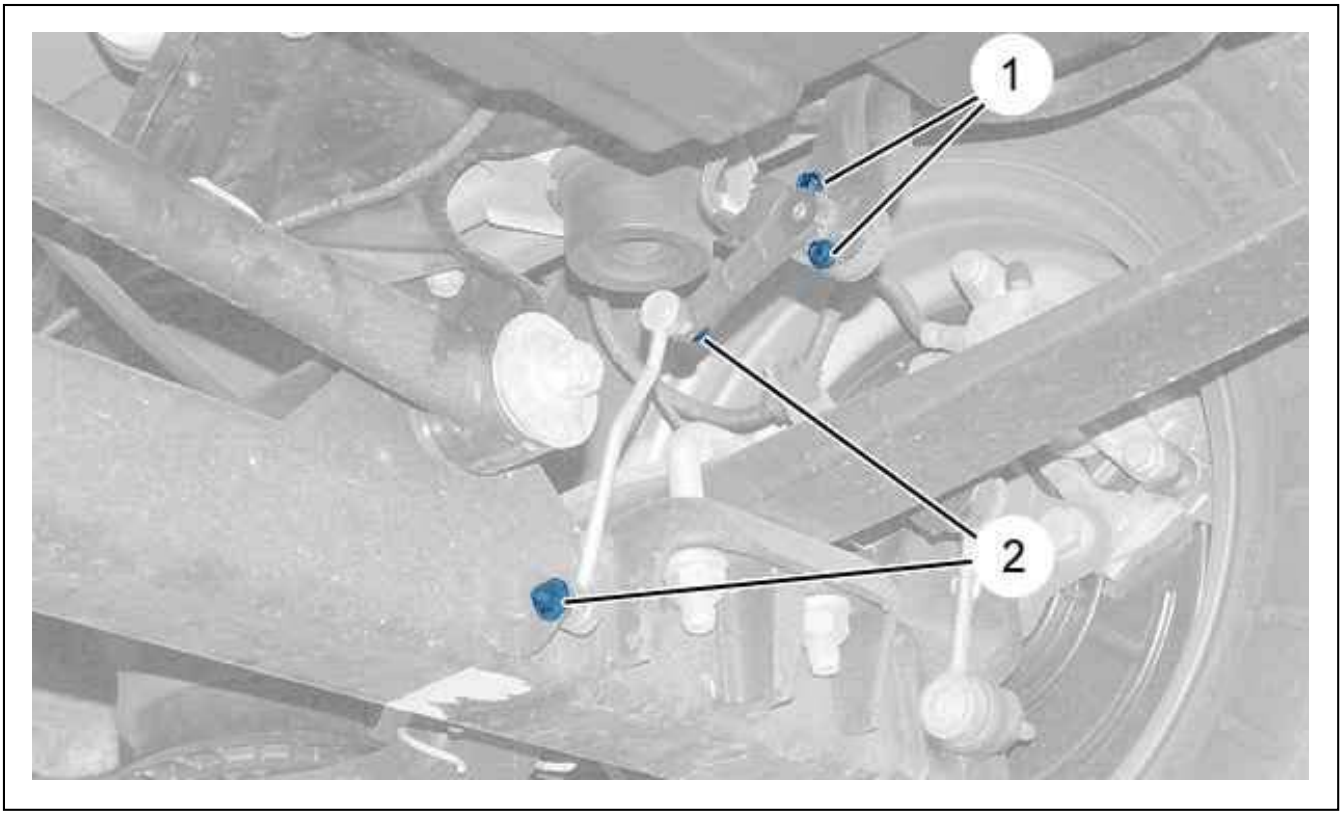

Figure : B3BB04XD

Reference	Designation	Tightening torque
(1)	Fixing bolt on support : Height sensor	0,3 daNm
(2)	fixing screws : Body height sensor rod	0,9 daNm

3.2. Air compressor

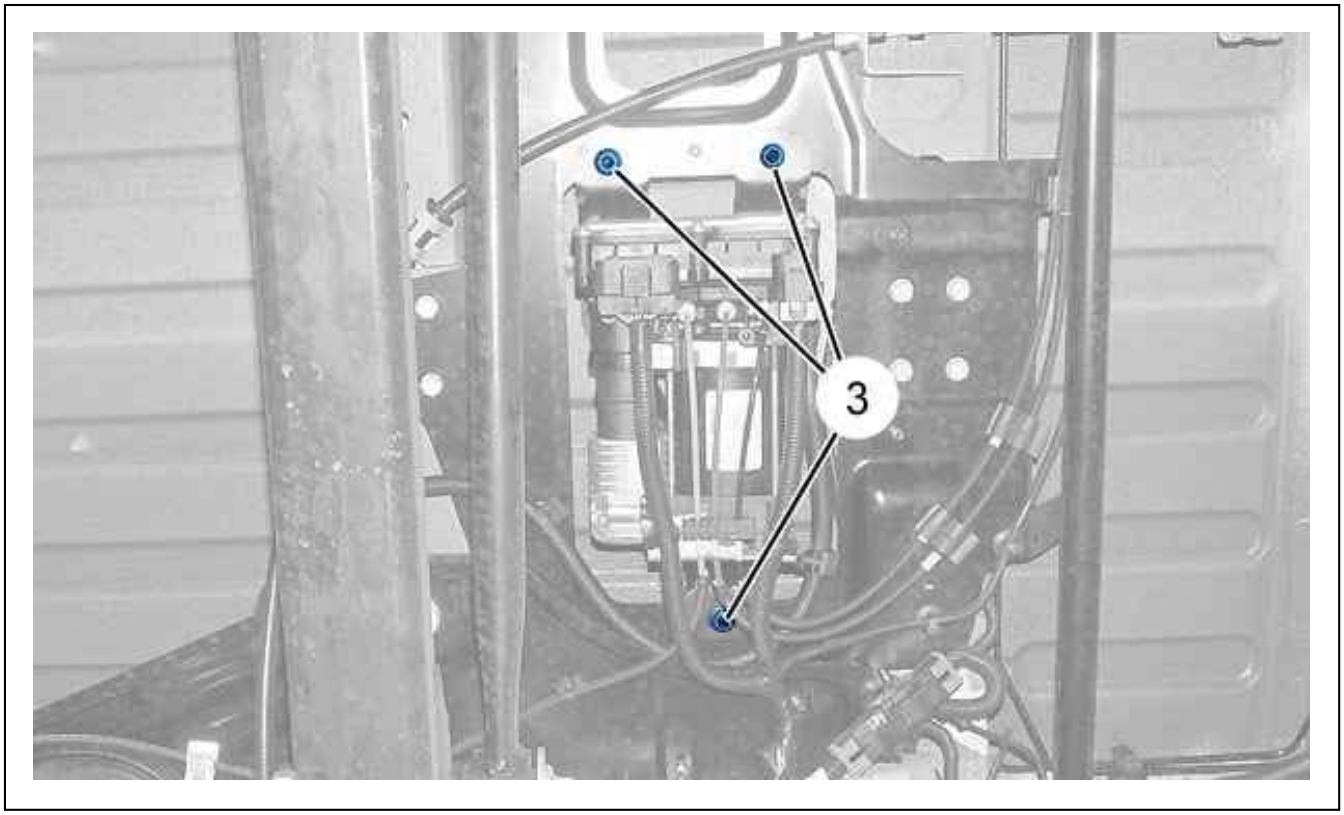

Figure : B3BB04YD

Reference	Designation	Tightening torque
(3)	fixing nuts : Air compressor support	2,4 daNm

3.3. Compressed air reservoir

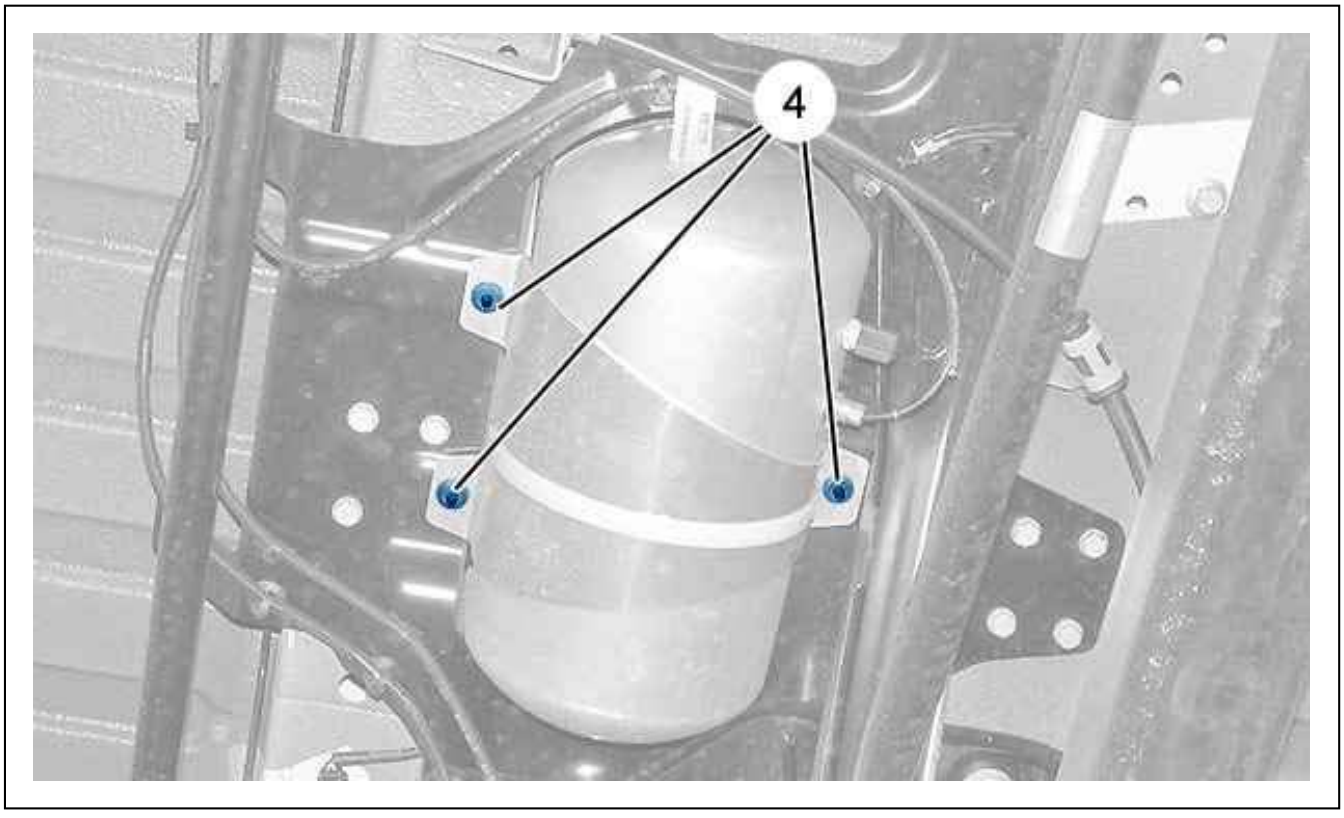

Figure : B3BB04ZD

Reference	Designation	Tightening torque
(4)	Nuts fixing the compressed air reservoir on the body	0,9 daNm

3.4. Pneumatic spring

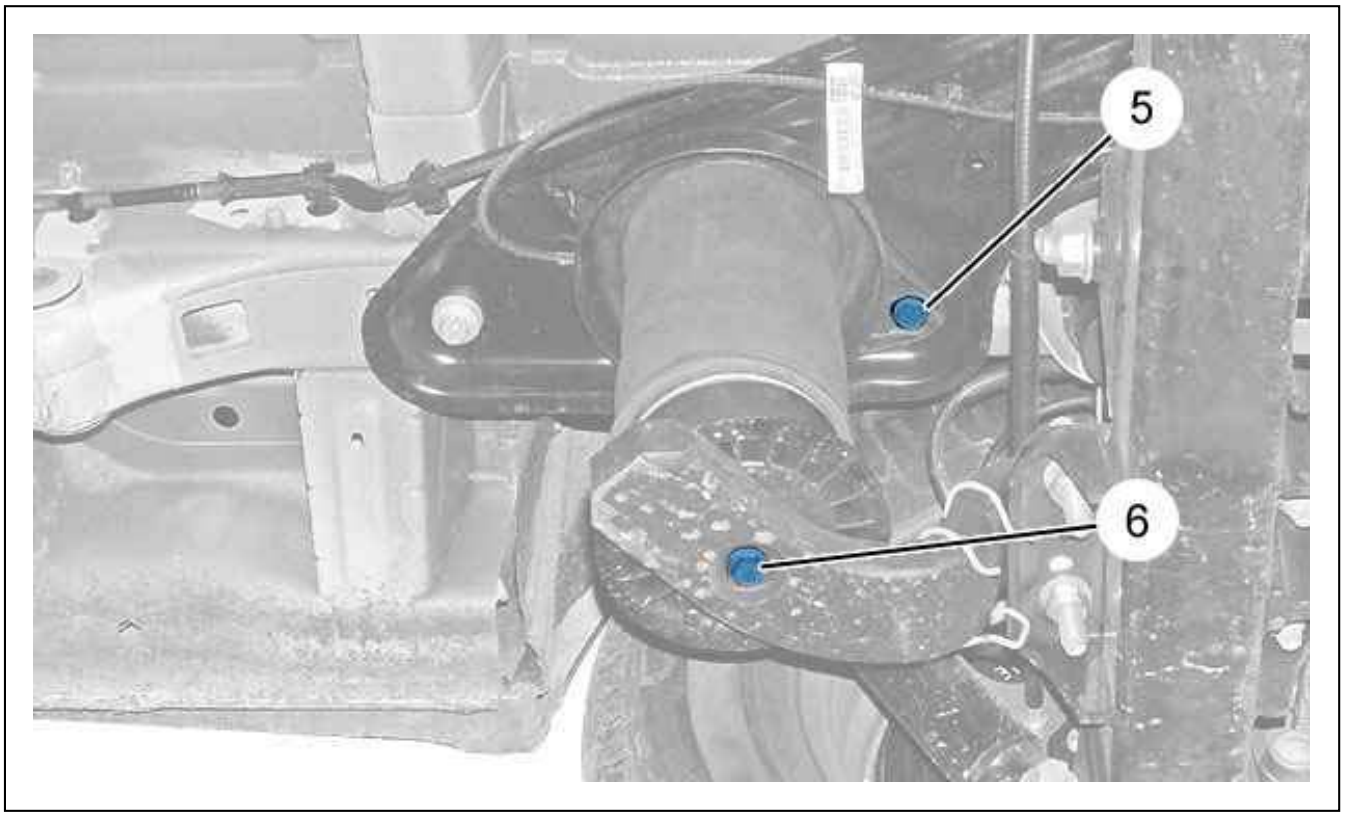

Figure : B3BB050D

Reference	Designation	Tightening torque
(5)	Bolt for fixing on the bodyshell : Pneumatic spring	3,5 daNm
(6)	Bolt for fixing on the suspension blade : Pneumatic spring	3,5 daNm

4. Rear brake backplates

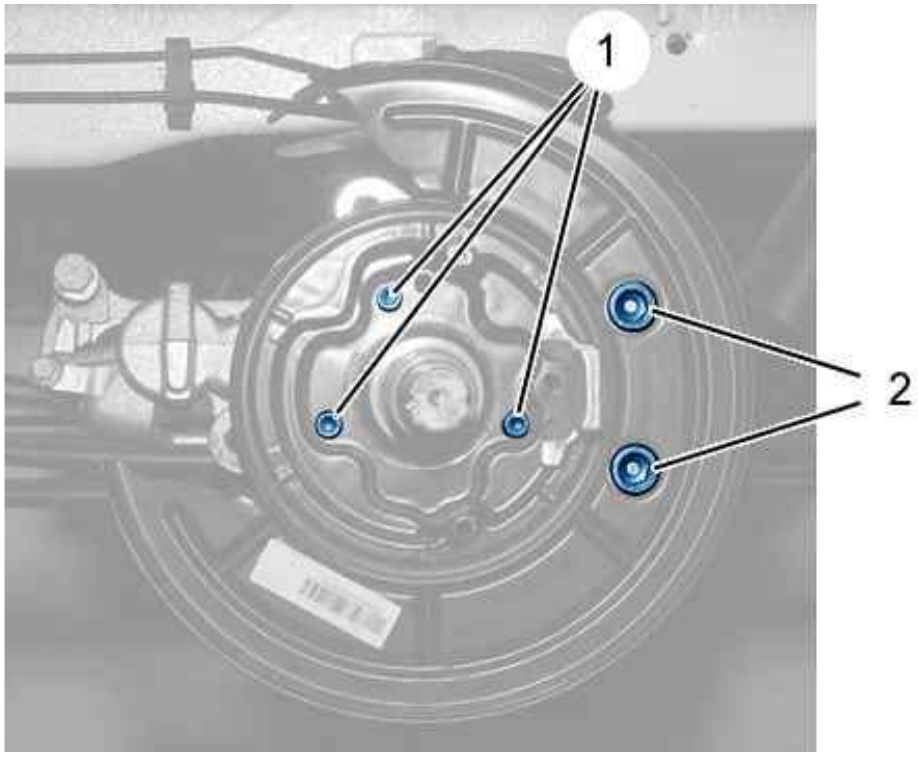

Figure : B3BB051D

Reference	Designation	Tightening torque
(1)	Bolt fixing the handbrake on the rear stub axle	2,5 daNm
(2)	bolts - Handbrake shoes support	20 daNm

ADJUSTMENT : PLACING AT THE REAR AXLE TIGHTENING REFERENCE HEIGHT

CAUTION : The suspension components of the rear axle must be tightened with the vehicle at the reference height Failure to observe these conditions would result in the distortion of the silent blocks or an inefficient tightening of the suspension blade clamps.

1. Vehicle with metal suspension

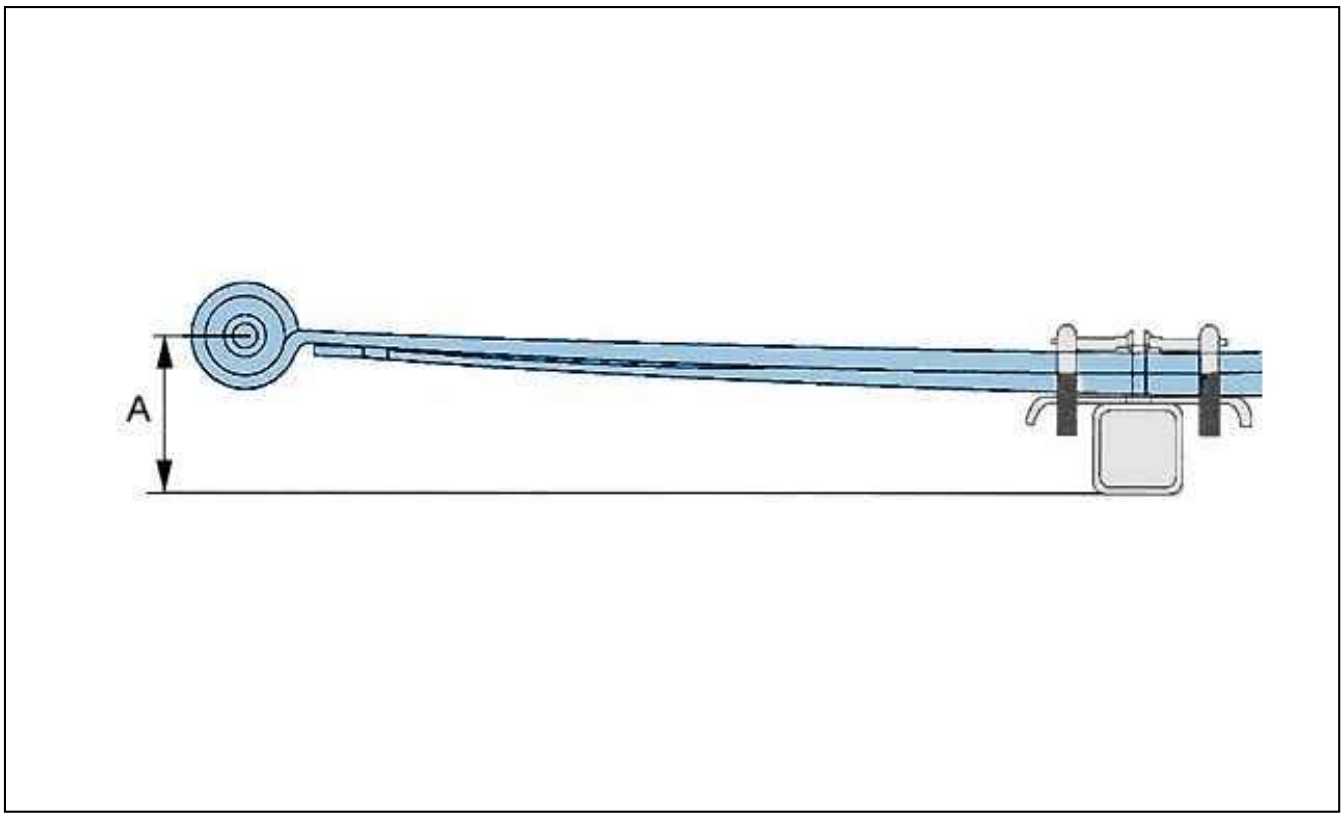

Figure : B3BP1G9D

version	Heavy and light vehicles	Mobile home - Cab platform
"A" : Height	248 mm	300 mm

The height " A " is measured between the suspension blade front fixing centreline and the underneath of the rear axle crossmember.
The reference height is obtained by loading the vehicle.

2. Vehicle with pneumatic suspension

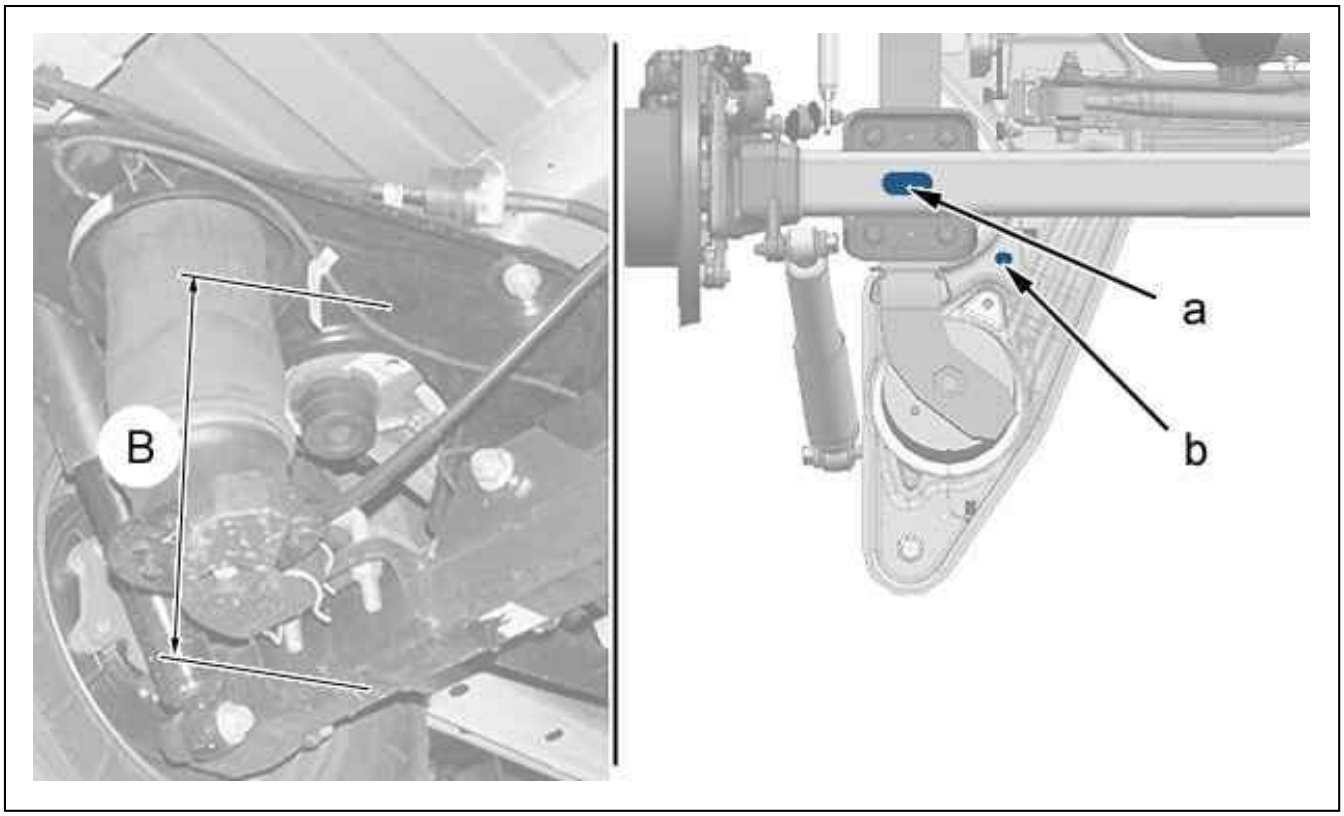

Figure : B3BF007D

version	Vehicle with pneumatic suspension
"B": Height	210 mm

"B" : Measure between the measurement zone "b" underneath the mounting for the pneumatic suspension units and the measurement zone "a" under the rear axle crossmember.

REMOVING - REFITTING : FRONT ANTI -ROLL BAR

1. Recommended tools

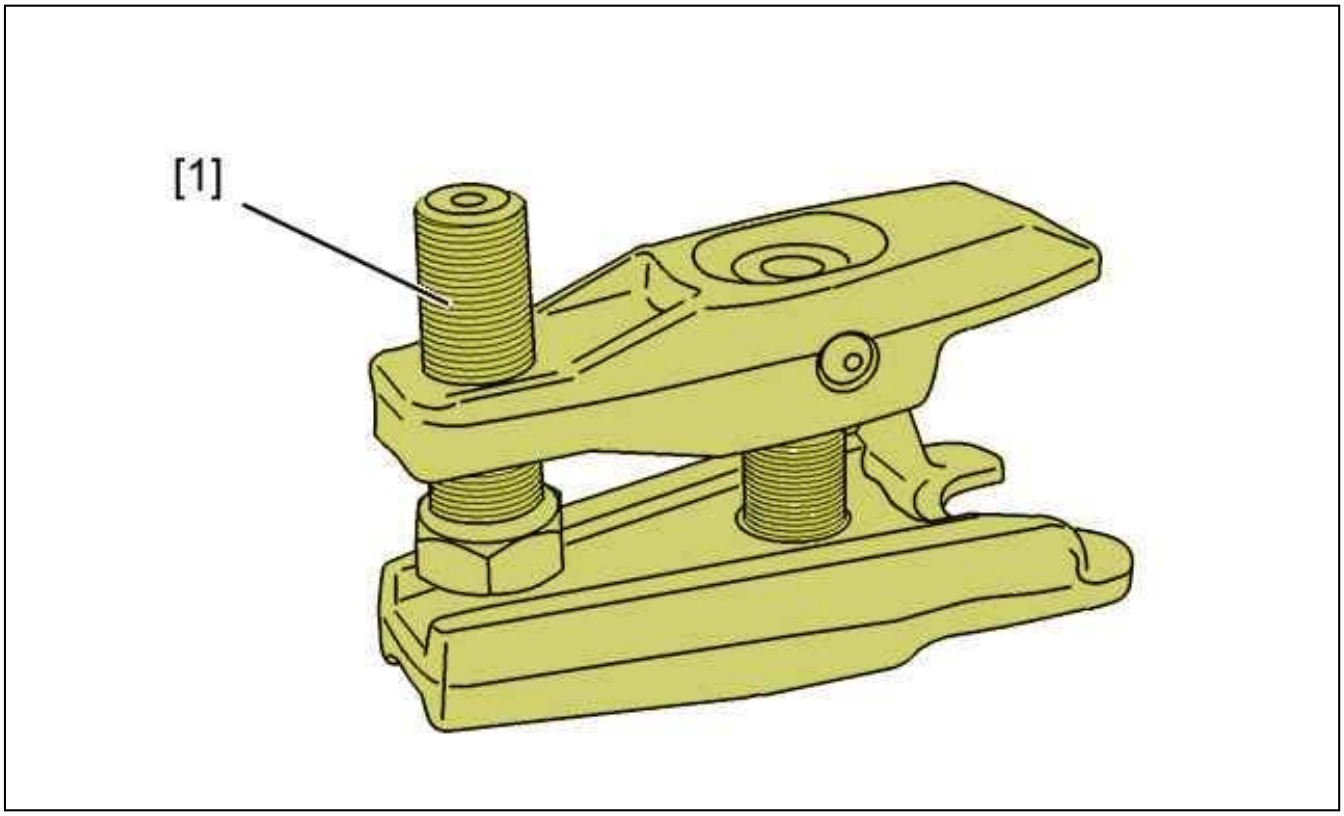

Figure : E5AP2WYD

Reference	Designation	Reference	Reference
[1]	ball-joint extractor	5707-T	(-).0919

2. Removing

Disconnect the battery negative terminal.
Untighten the wheel screws (left hand front).
Lift and support the front of the vehicle.
Remove the left-hand front wheel.

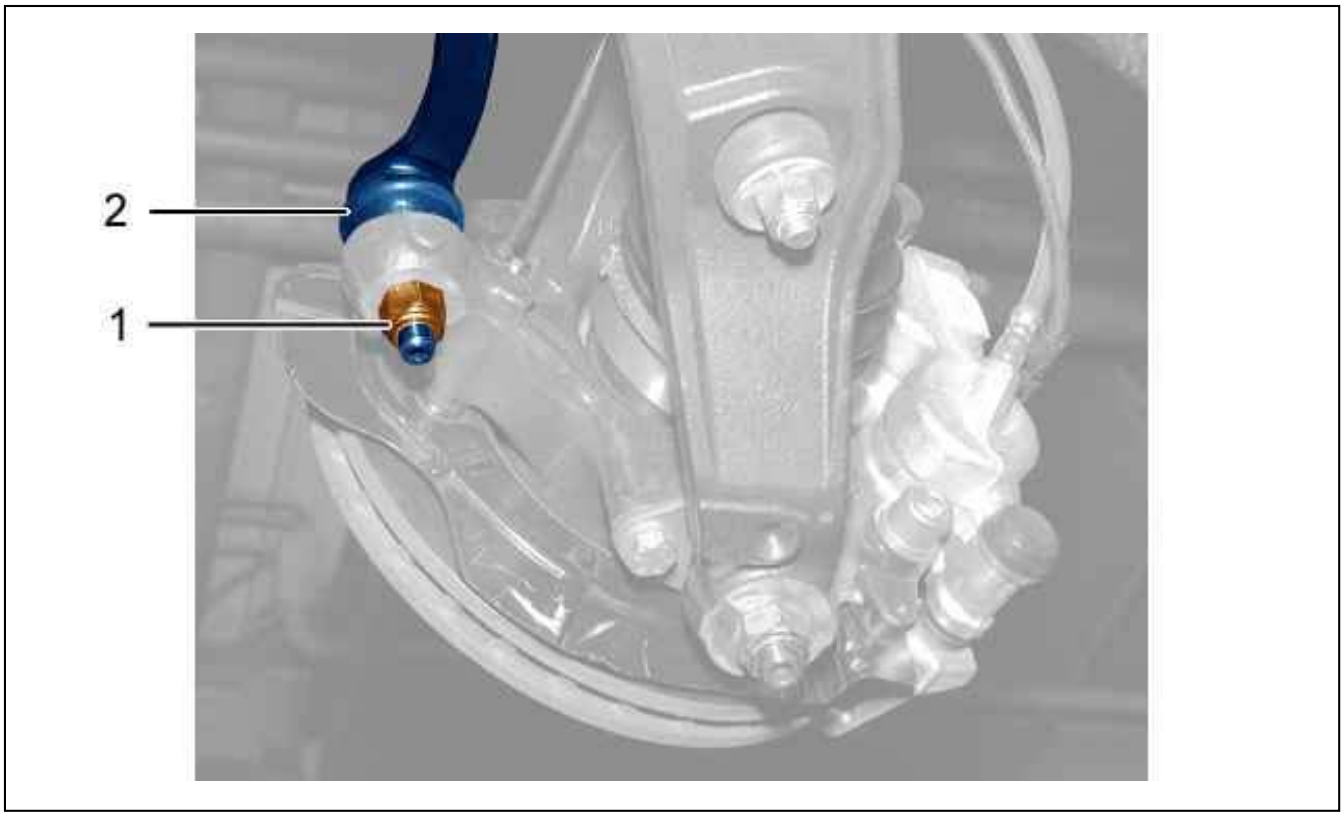

Figure : B3FP7JJD

Remove the nut (1) (left side).
Uncouple the steering ball-joint (2) ; Using tool [1].

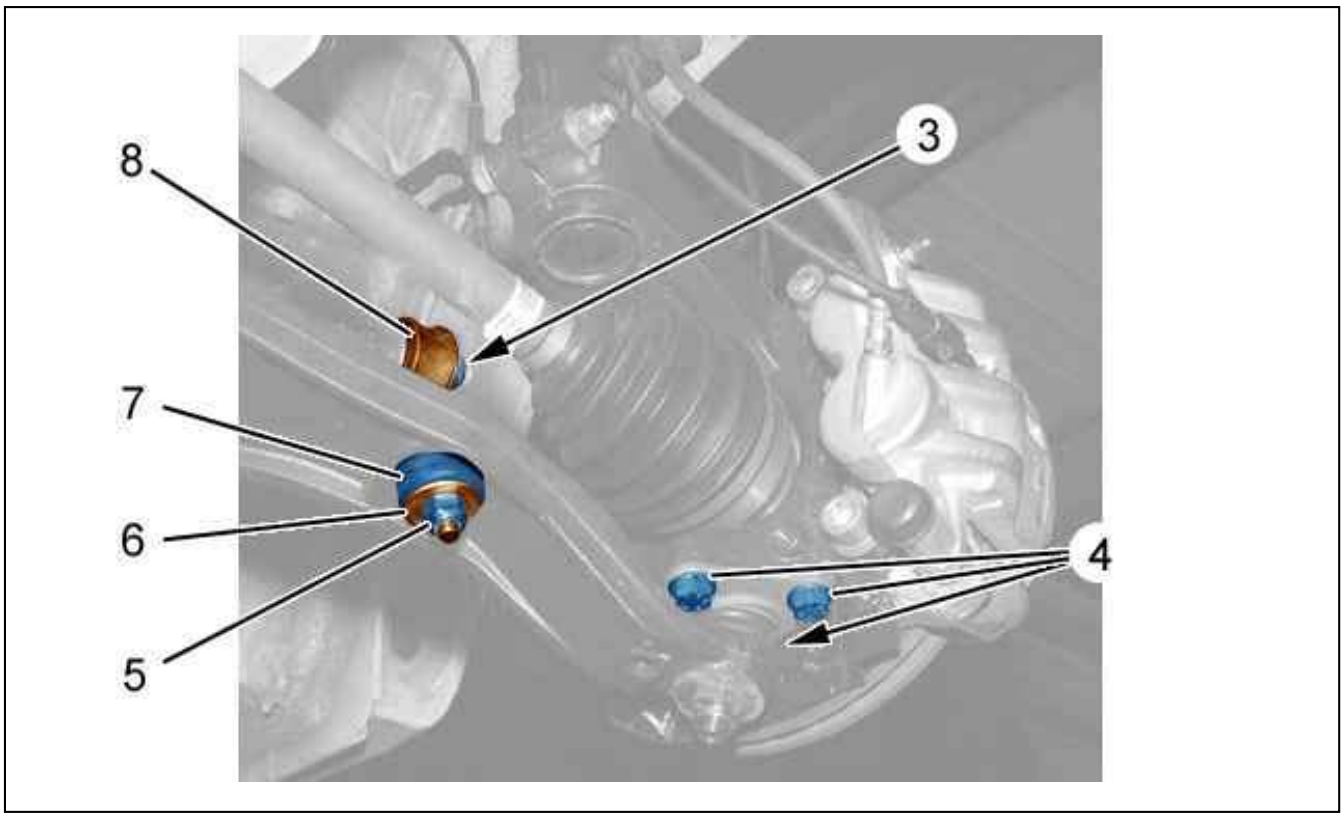

Figure : B3BP1CDD

Remove the 3 bolts (4).

Move the hub carrier forward.

Remove (on each side) :

- Remove the nuts (3), (5)
- The washer (6)
- The silentblock (7)
- The connecting rod (8)

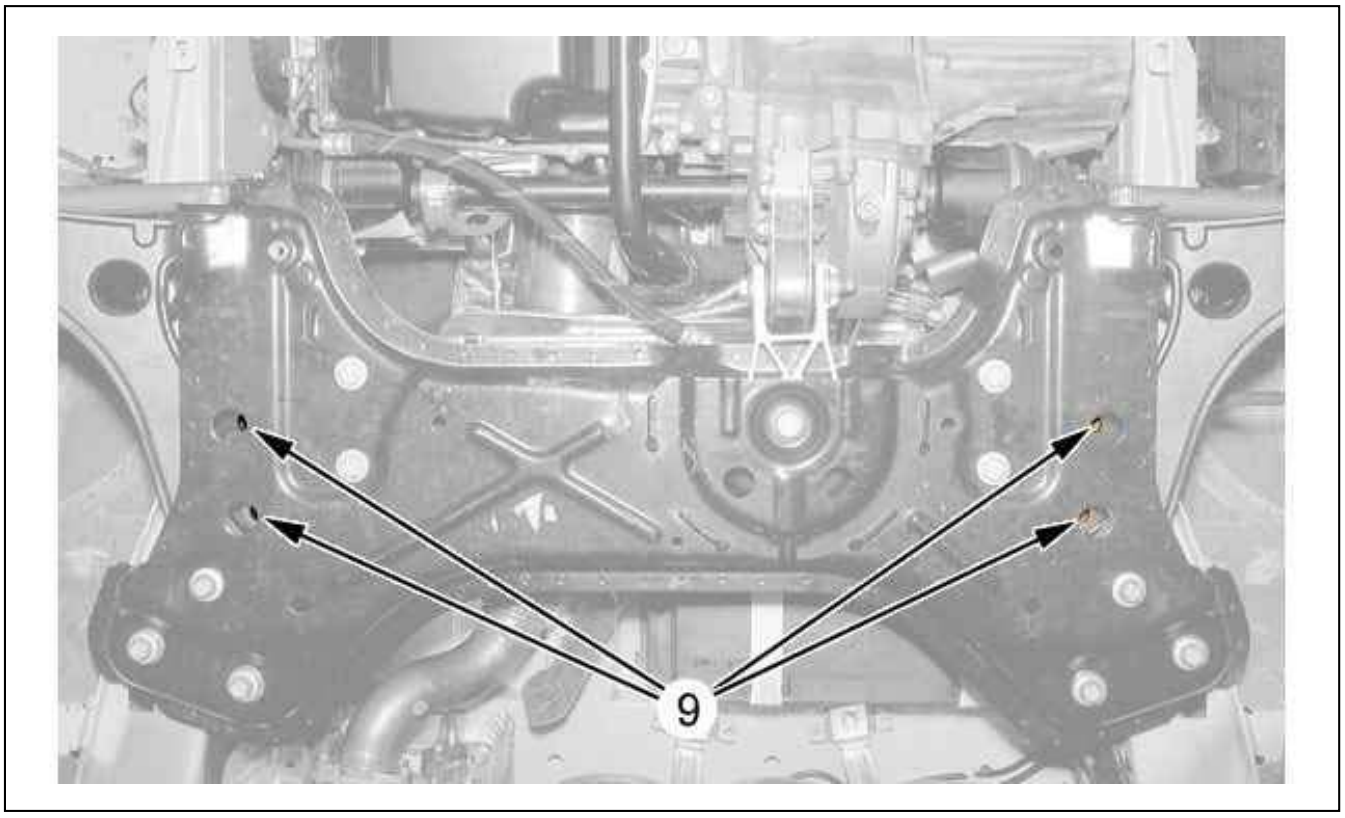

Figure : B3CP0BDD

Remove the bolts (9) (on each side).

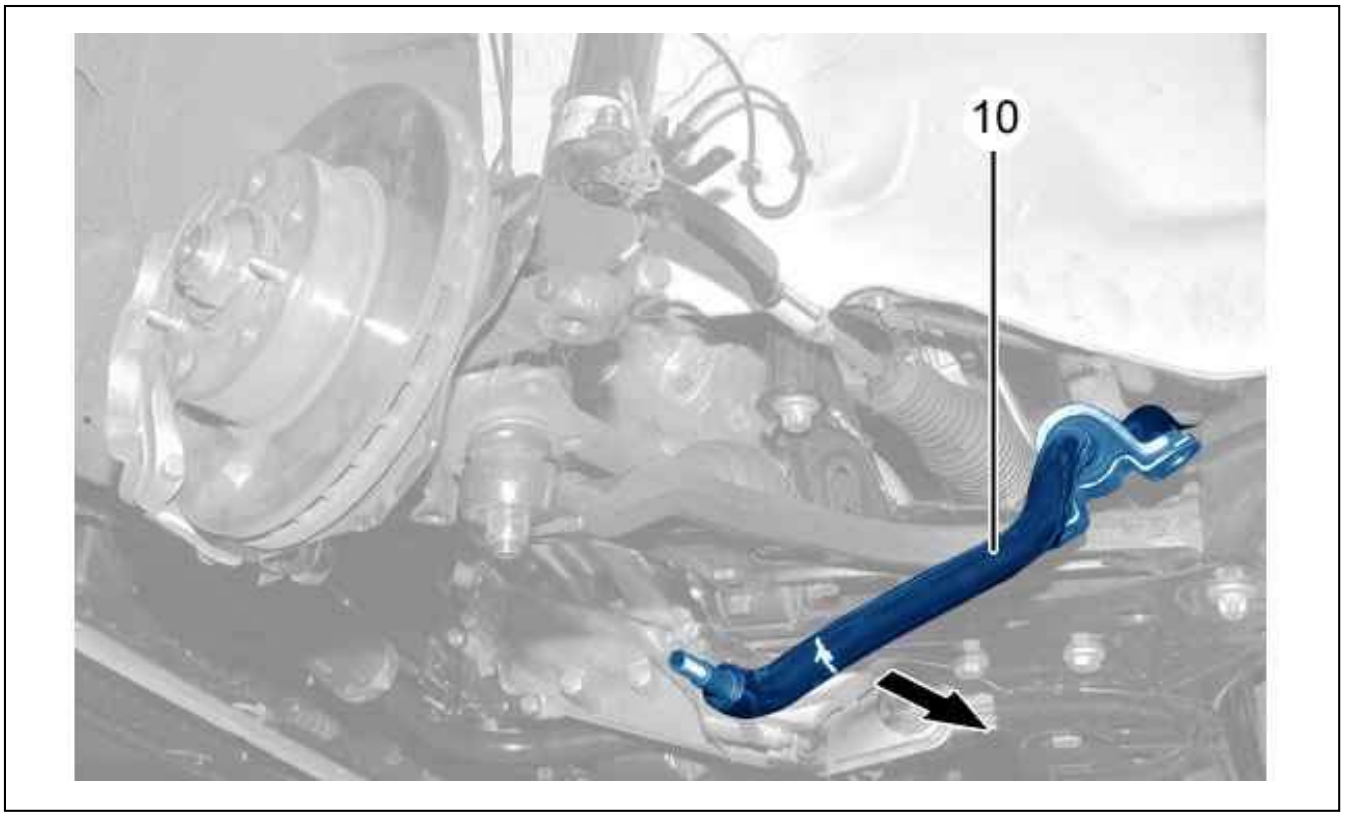

Figure : B3BP1CED

Attach the steering rod to the hub carrier .
Remove the front anti-roll bar (10) from the left-hand side with a downward rotation (following the arrow).

3. Refitting

N.B. : Always fit new Nylstop nuts.

Refit (on each side) :

- The front anti-roll bar (10)
- The bolts (9) ; Tighten to 5 ± 1,3 daN.m
- The connecting rod (8)
- The silentblock (7)
- The washer (6)
- The nuts (5), (3)

Position the hub carrier lower ball joint.
Refit the bolts (4) ; Tighten to 11,5 ± 0,4 daN.m.
Couple up the steering ball-joint (2).
Refit the nut (1) ; Tighten to 8 ± 0,7 daN.m.
Fit the wheel.
Return the vehicle to its wheels.
Tighten (on each side) :

- The nut (3) to 5,6 ± 0,5 daN.m
- The nut (5) to 5,6 ± 0,5 daN.m

Tighten the wheel bolts .
Reconnect the battery.

REMOVING - REFITTING : REAR DAMPER

1. Removing

Raise and support the vehicle, with the rear wheels hanging free.



Figure : B3BP1CJD

Remove bolts (1).

N.B. : To facilitate screw (1) removal or refitting, the strain on the axle should be relieved by means of a jack or a hydraulic post type hoist.

Remove :

- The (2) bolt
- The damper (3)

2. Refitting

Refit :

- The damper (3)
- The bolts (2), (1) (without tightening)

Return the vehicle to its wheels.
Place the vehicle at its reference ride height (see the relevant operation).

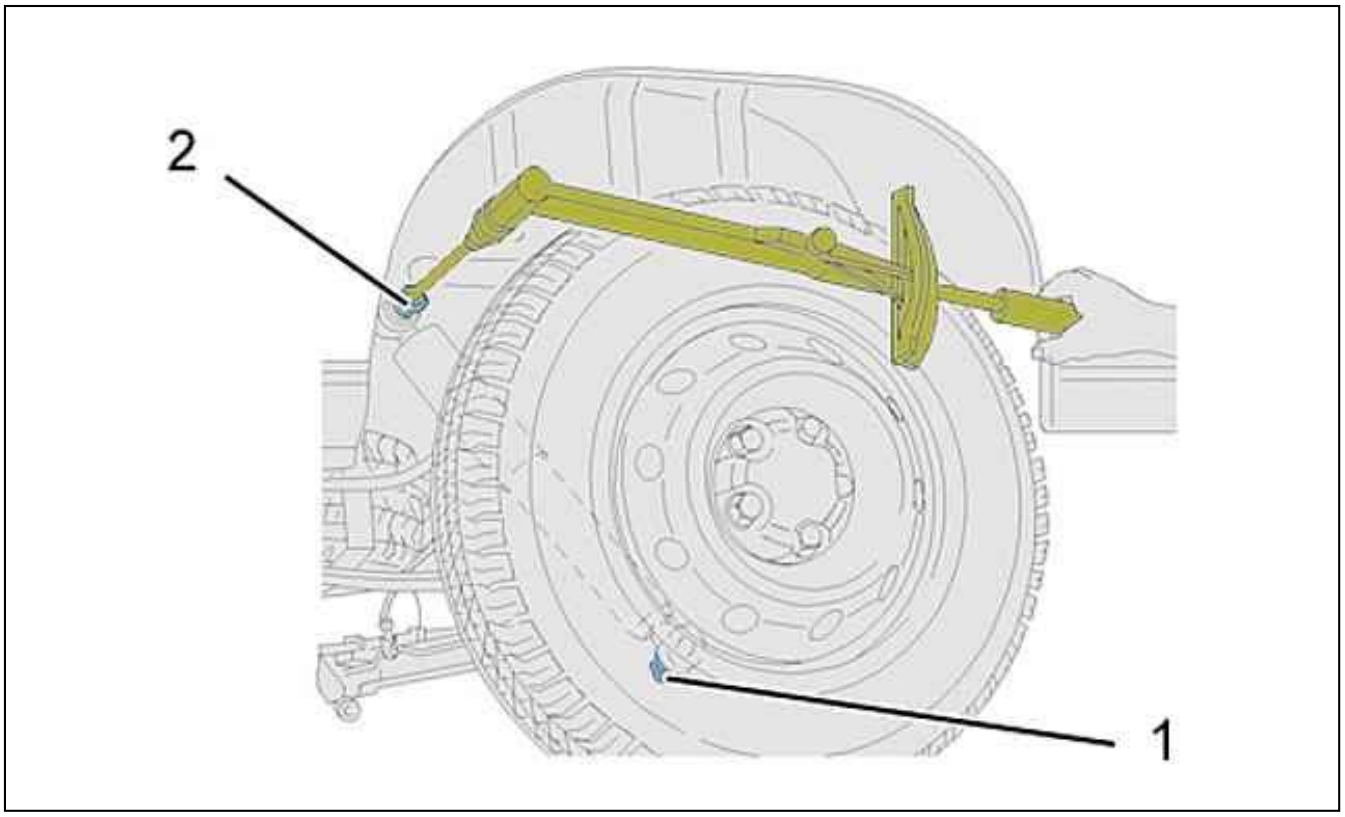

Figure : B3BP1CKD

Tighten :

- Screw (1) to 14,5 ± 1,2 daNm
- Screw (2) to 14,5 ± 1,2 daNm

REMOVING - REFITTING : SUSPENSION BLADE

1. Removing

Remove the rear suspension (see the relevant operation).

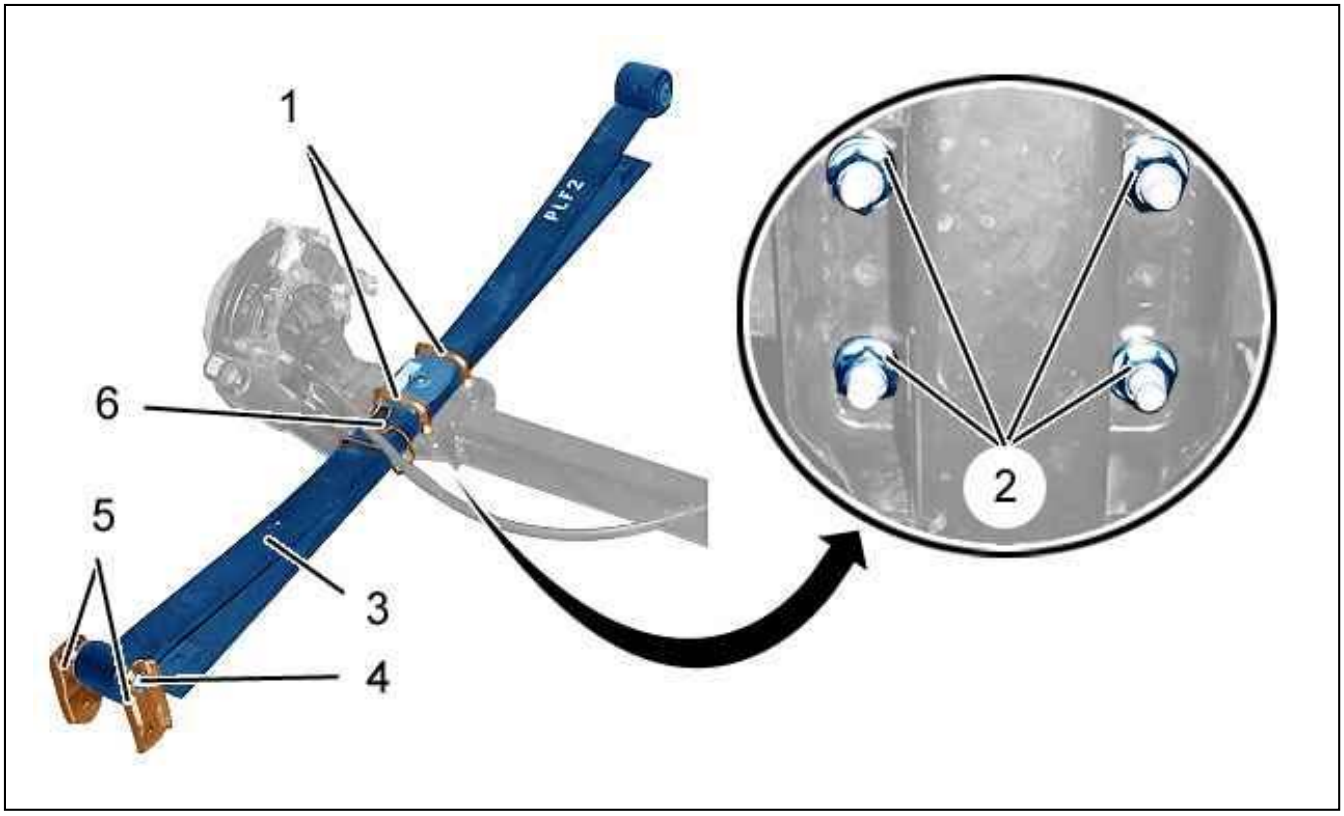

Figure : B3BP1CLD

Uncouple the handbrake cable from the cable guide (6).
Remove :

- The (4) bolt
- The rods (5)
- The cable guide (6)
- The nuts (2)
- The clamps (1)
- The suspension blade (3)

2. Refitting

CAUTION : Always fit new Nylstop nuts.

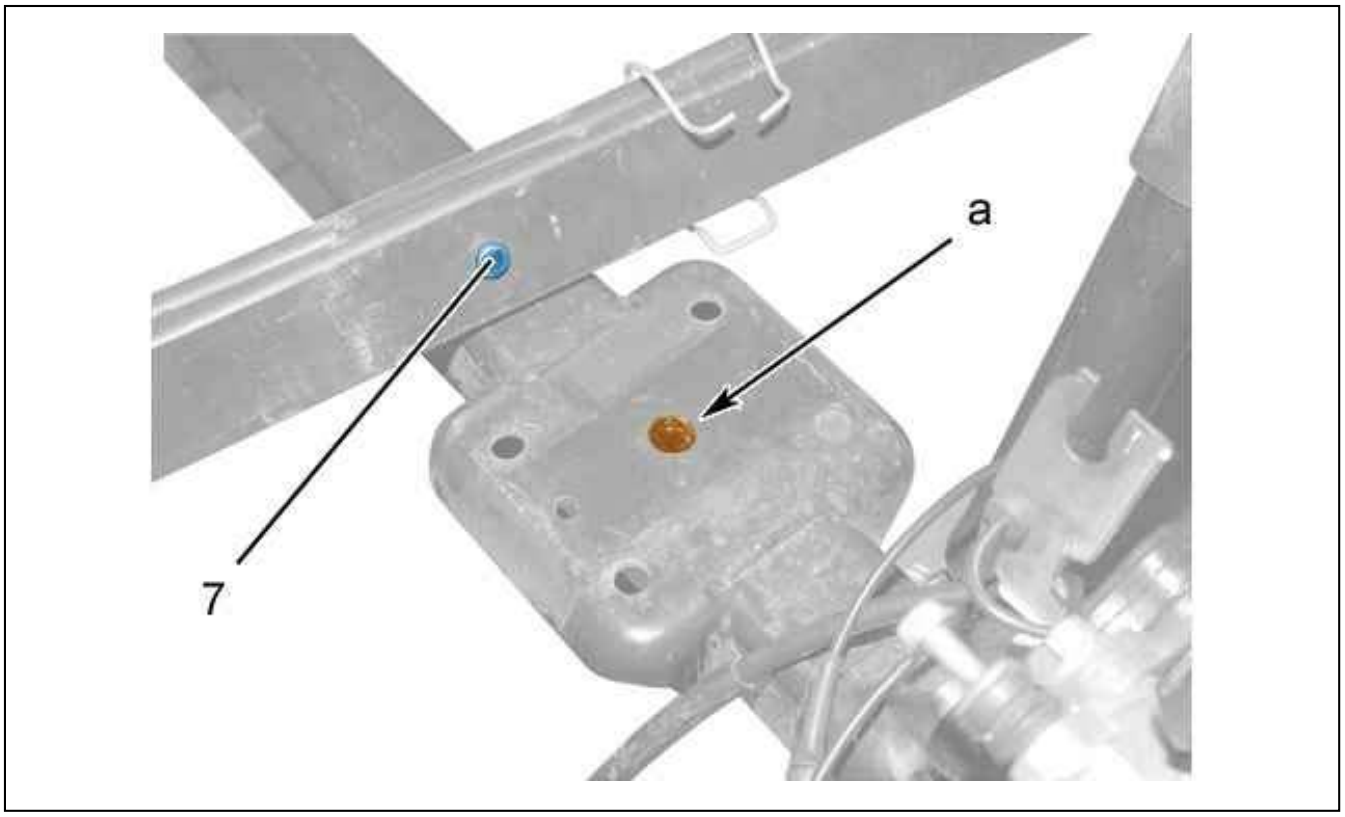

Figure : B3BP1CMD

Locate suspension blade (3).

N.B. : Ensure that the centring pin (7) is positioned in the location " a ".

Refit :

- The clamps (1)
- The nuts (2) ; Tighten to 13 ± 3,9 daN.m
- The rods (5)
- The (4) bolt
- The cable guide (6)

Couple the handbrake cable to the cable guide (6).
Refit the rear axle (see the relevant operation).

REMOVING - REFITTING : FRONT SUSPENSION LEG

ESSENTIAL : Observe the safety and cleanliness recommendations.

1. Recommended tools

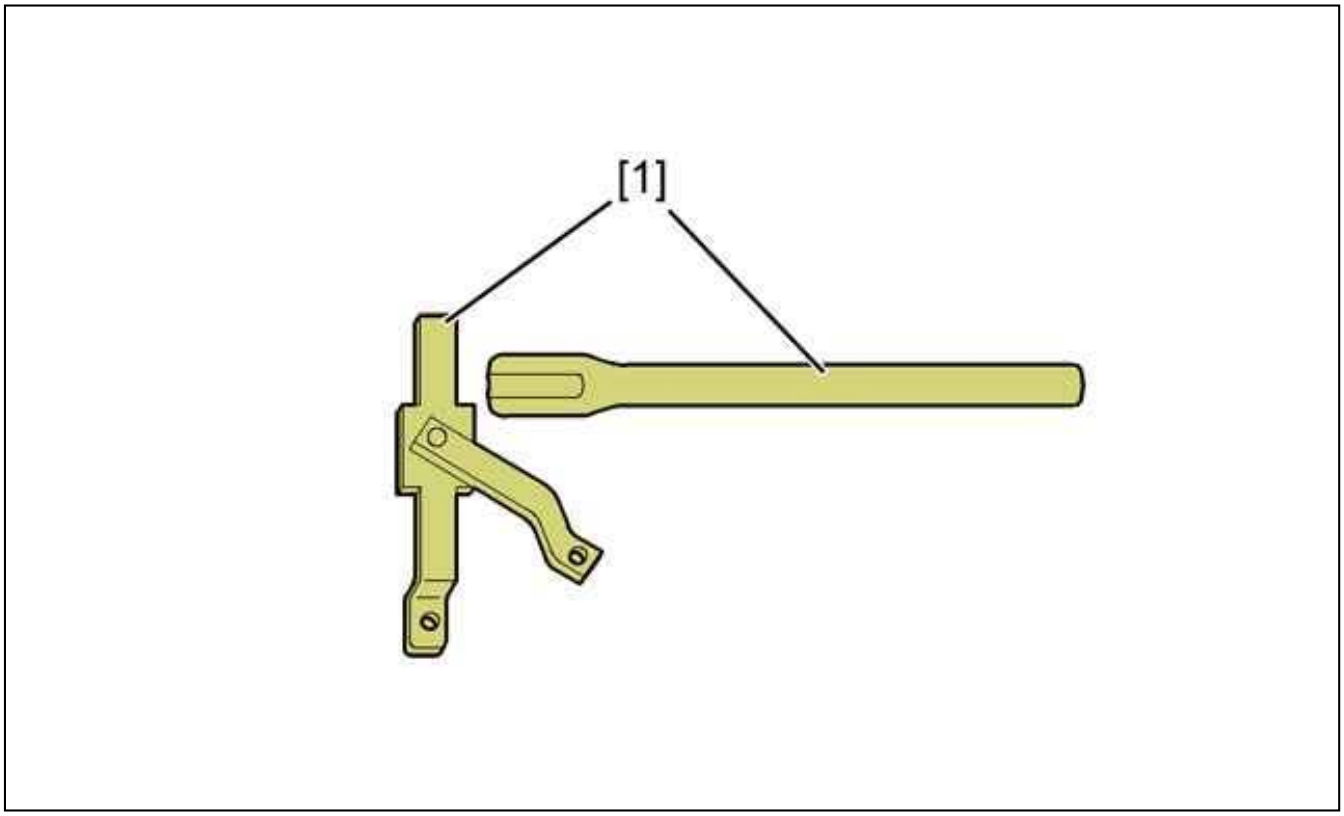

Figure : E5AP2Y3D

Reference	Designation	Reference	Reference
[1]	hub immobilising tool	6310-T	(-).0606-AY

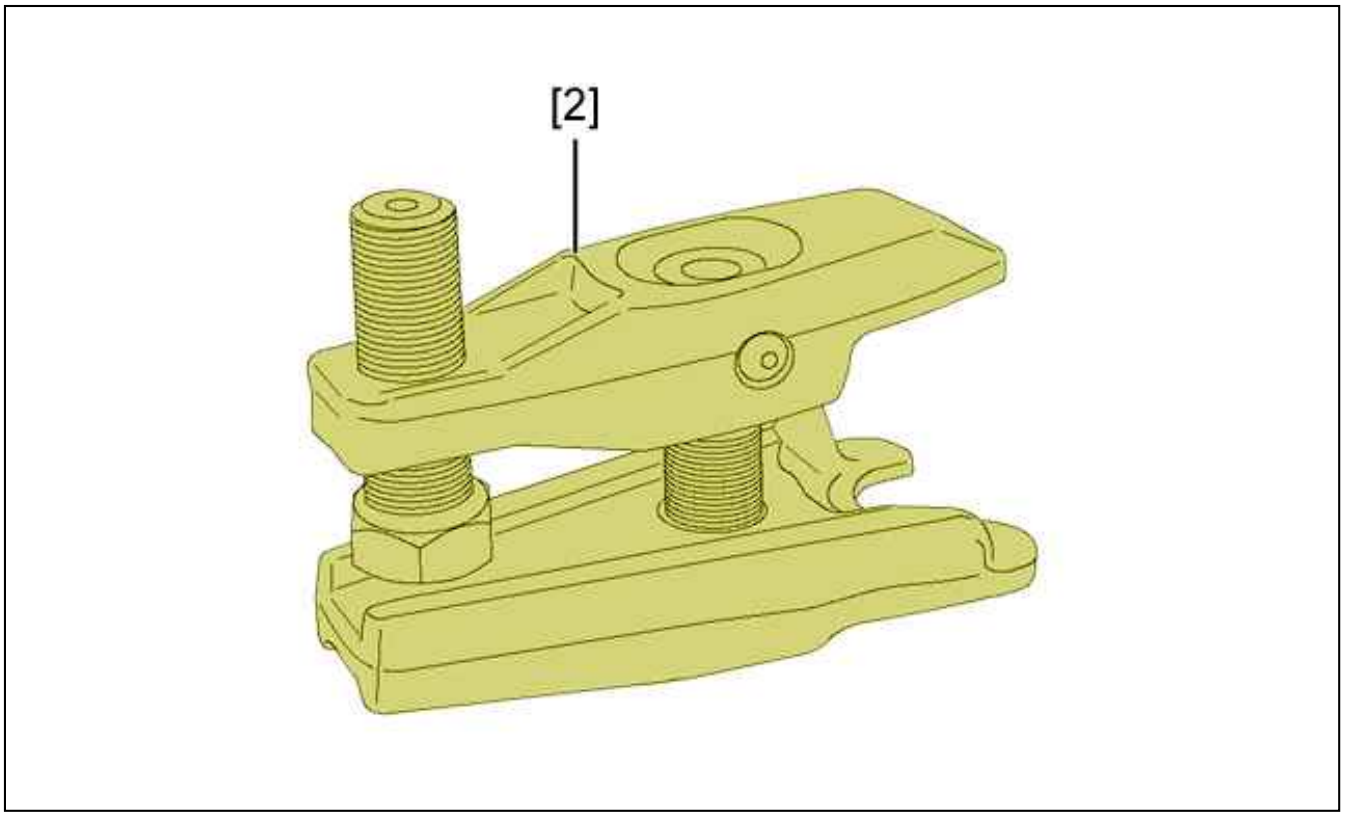

Figure : E5AP2Y4D

Reference	Designation	Reference	Reference
[2]	ball-joint extractor	5707-T	(-).0919

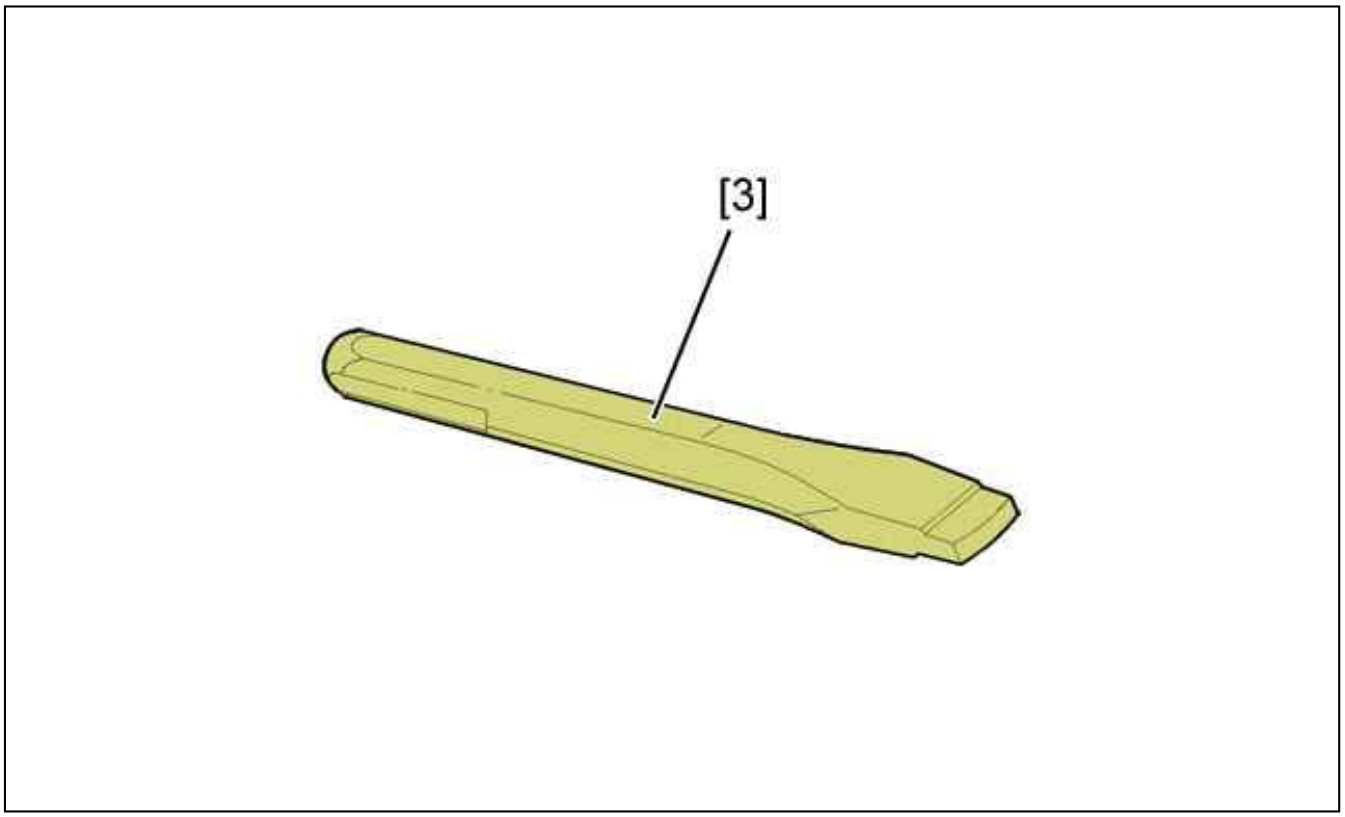

Figure : E5AP2Y5D

Reference	Designation	Reference	Reference
[3]	locking punch	5709-T.E	(-).0619-E

2. Removing

Release the front wheel bolts.
Lift and support the vehicle with front wheels suspended.
Remove the front wheels.

2.1. On the left-hand side



Figure : C5FP0YPD

Remove the lower lining (1) (see the relevant operation).

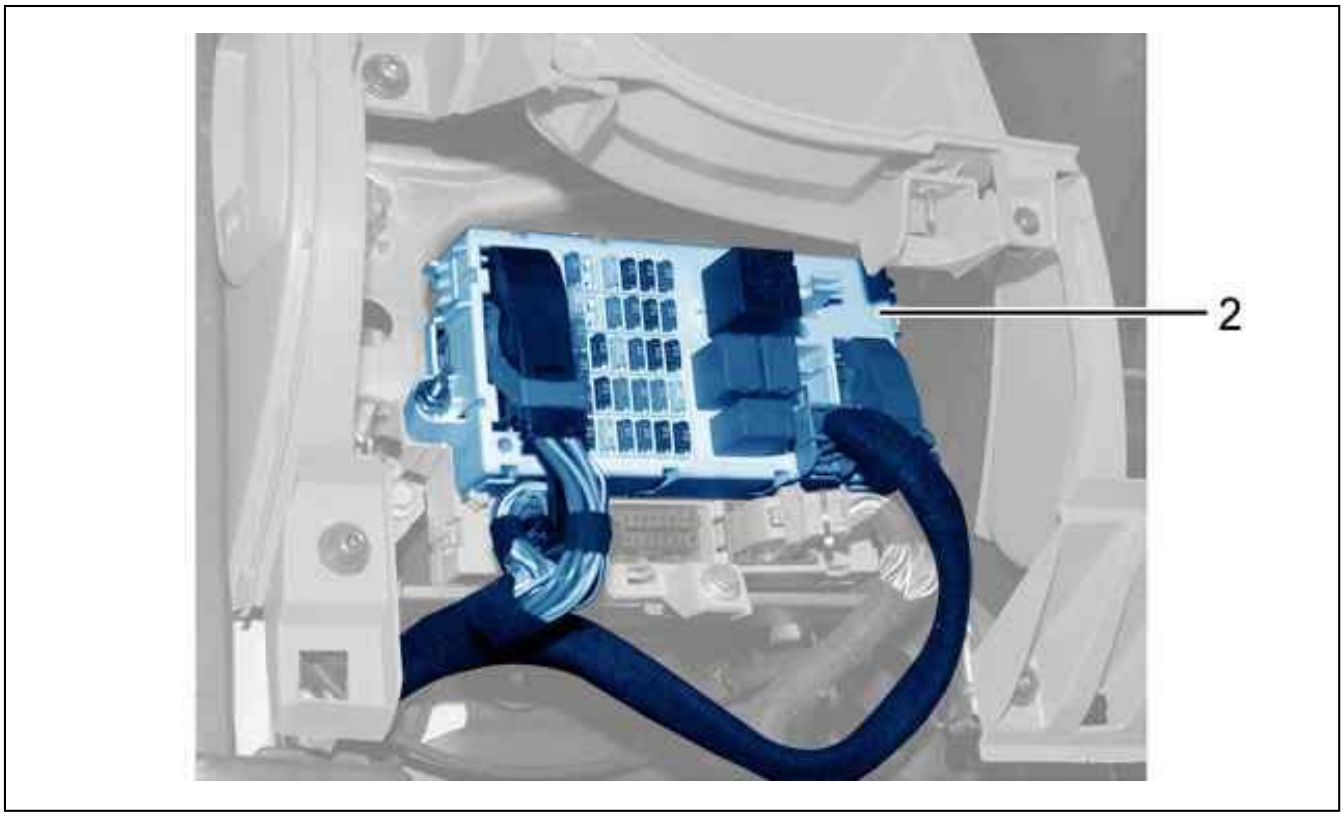

Figure : C5FP0Z5D

Remove the built-in systems interface (2) (see the relevant operation).

2.2. On the right-hand side

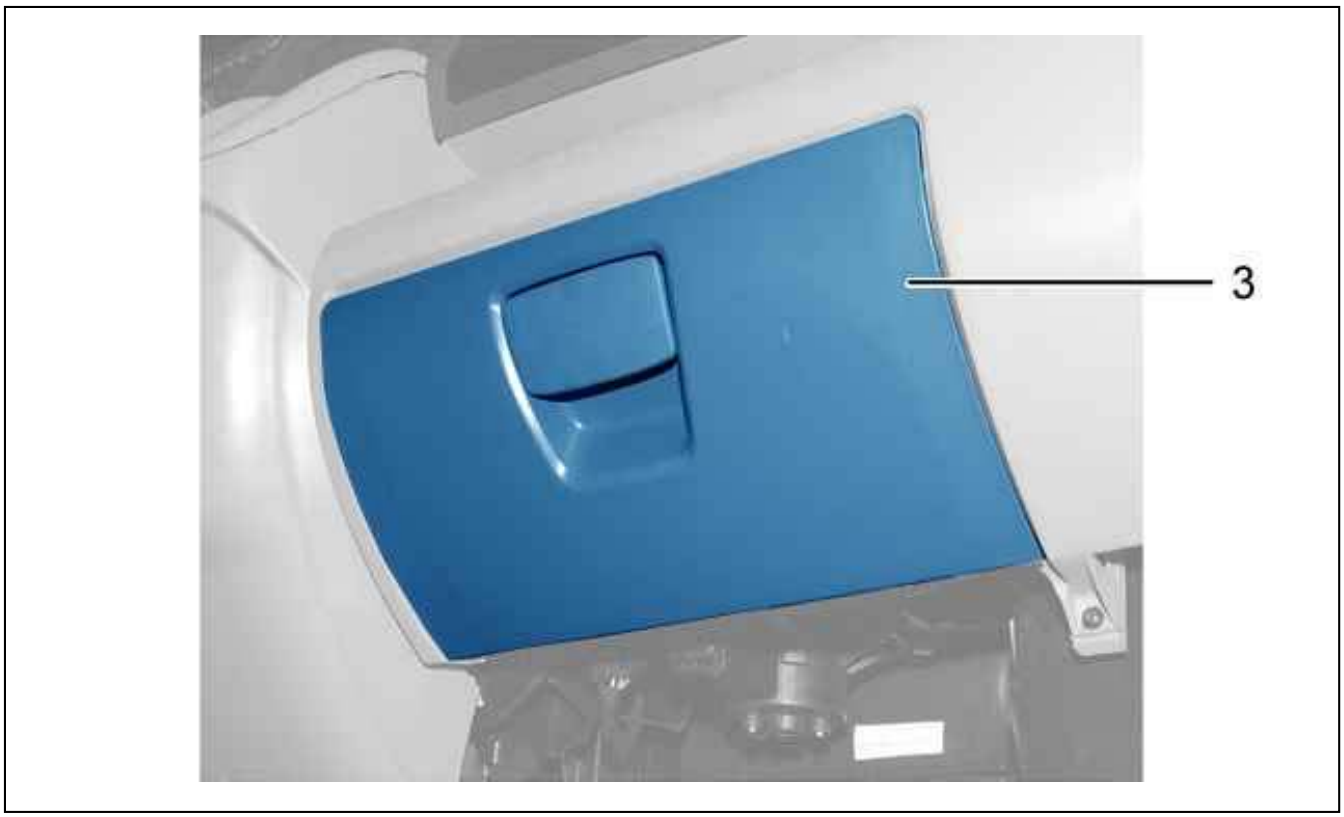

Figure : C5FP0Z6D

Remove The lower right-hand glove box (3) (see the relevant operation).

2.3. Common operations

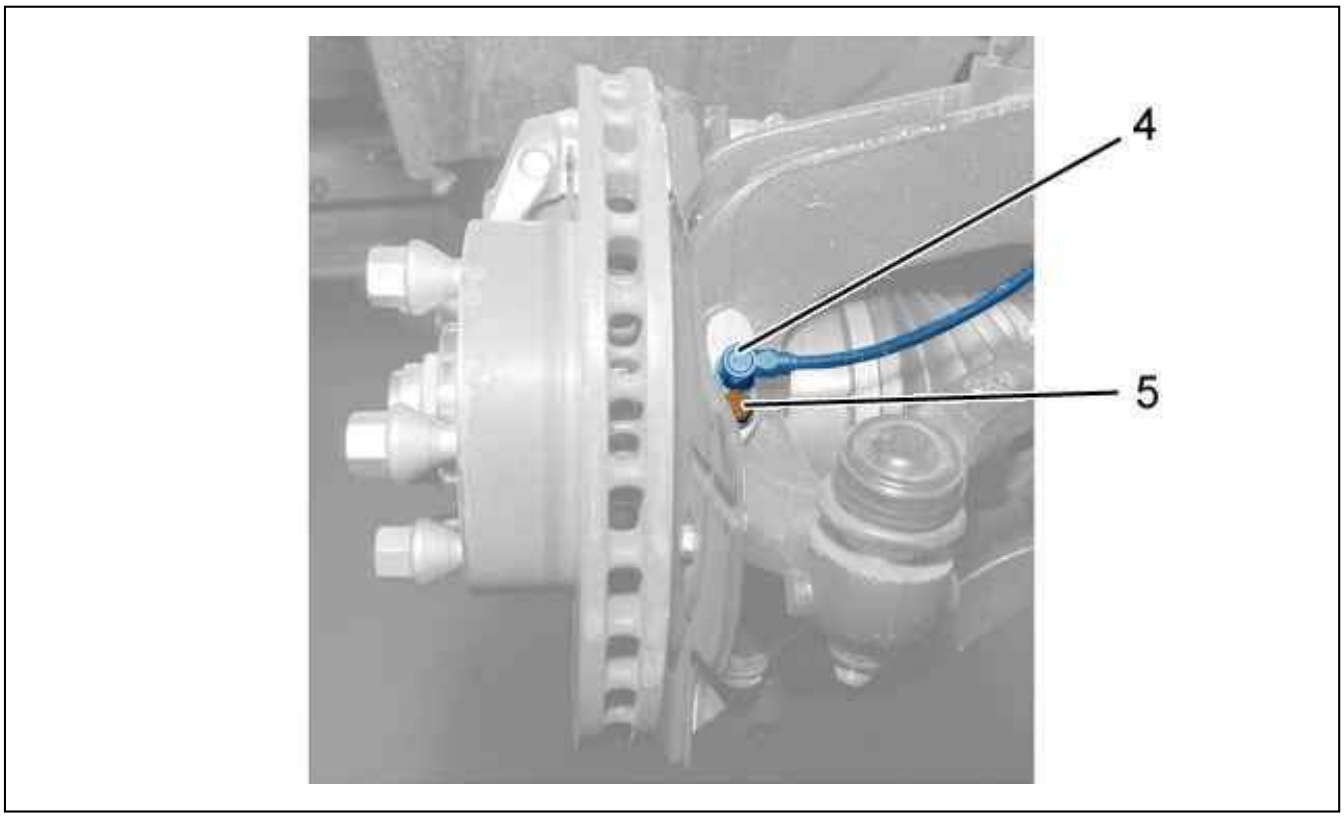

Figure : B3FP7L3D

Remove bolts (5).
Disengage the front wheel sensor (4).
Suspend the front wheel sensor (4).
Remove the brake pads (see the relevant operation).

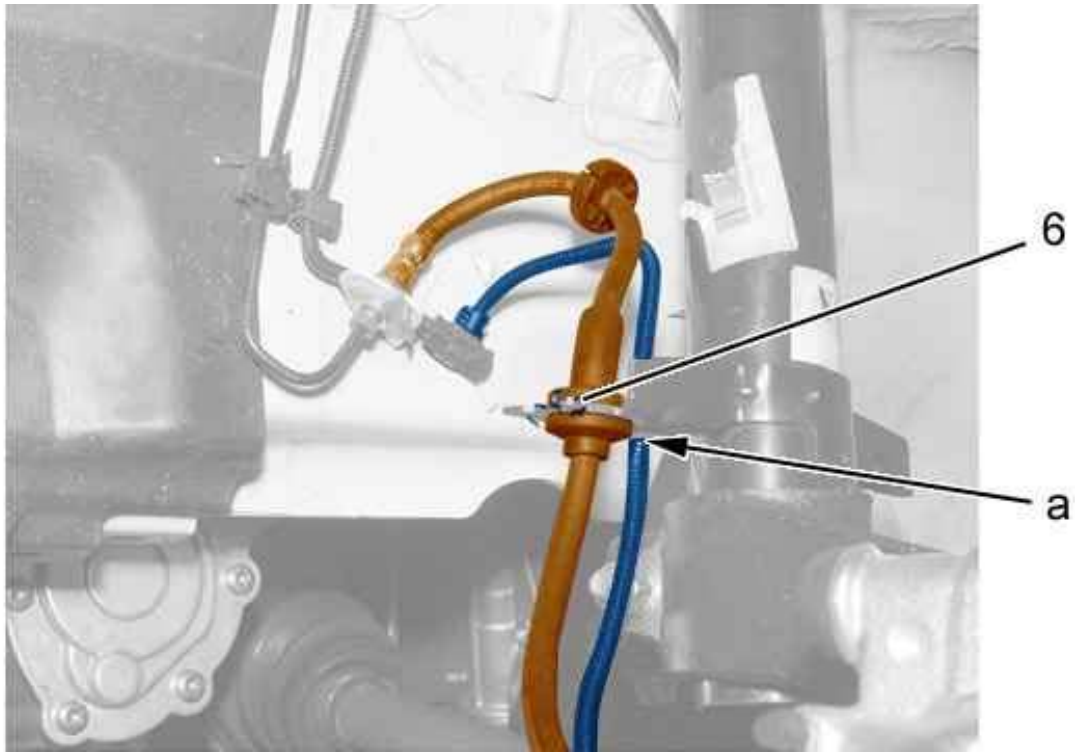

Figure : B3BP1CQD

Remove the clip (6).
Move aside the hose union from its support.
Unclip the electrical harness (at "a").

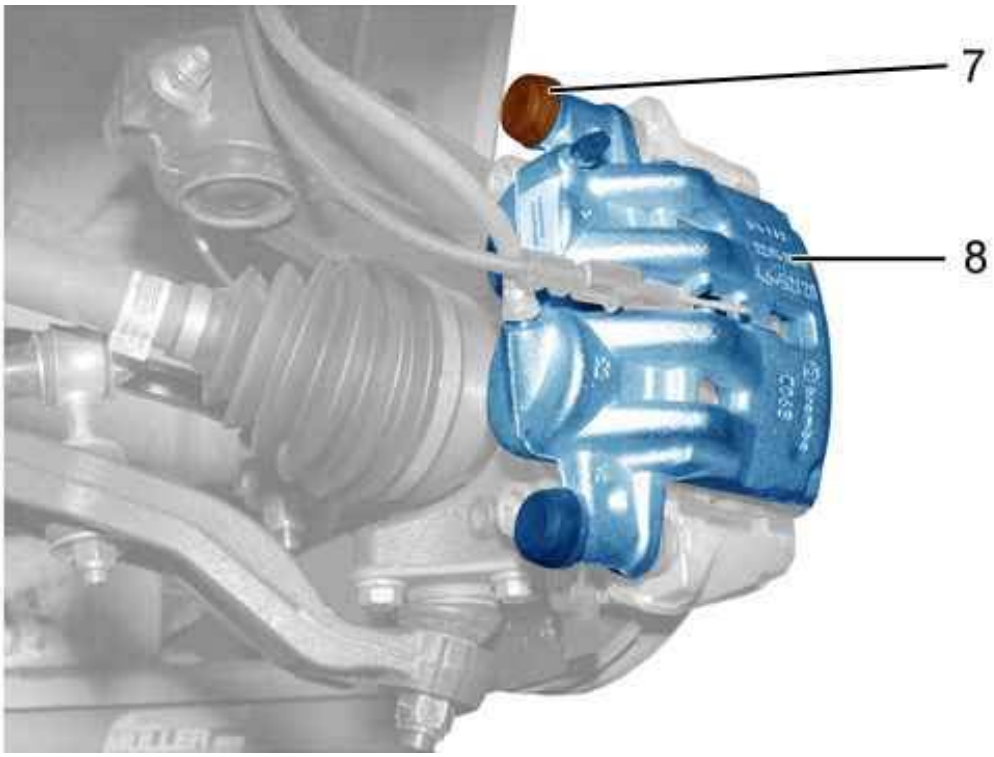

Figure : B3FP7L4D

Remove :

- The (7) bolt
- The brake caliper (8)

Leave the caliper hanging.
Unlock the transmission nut .

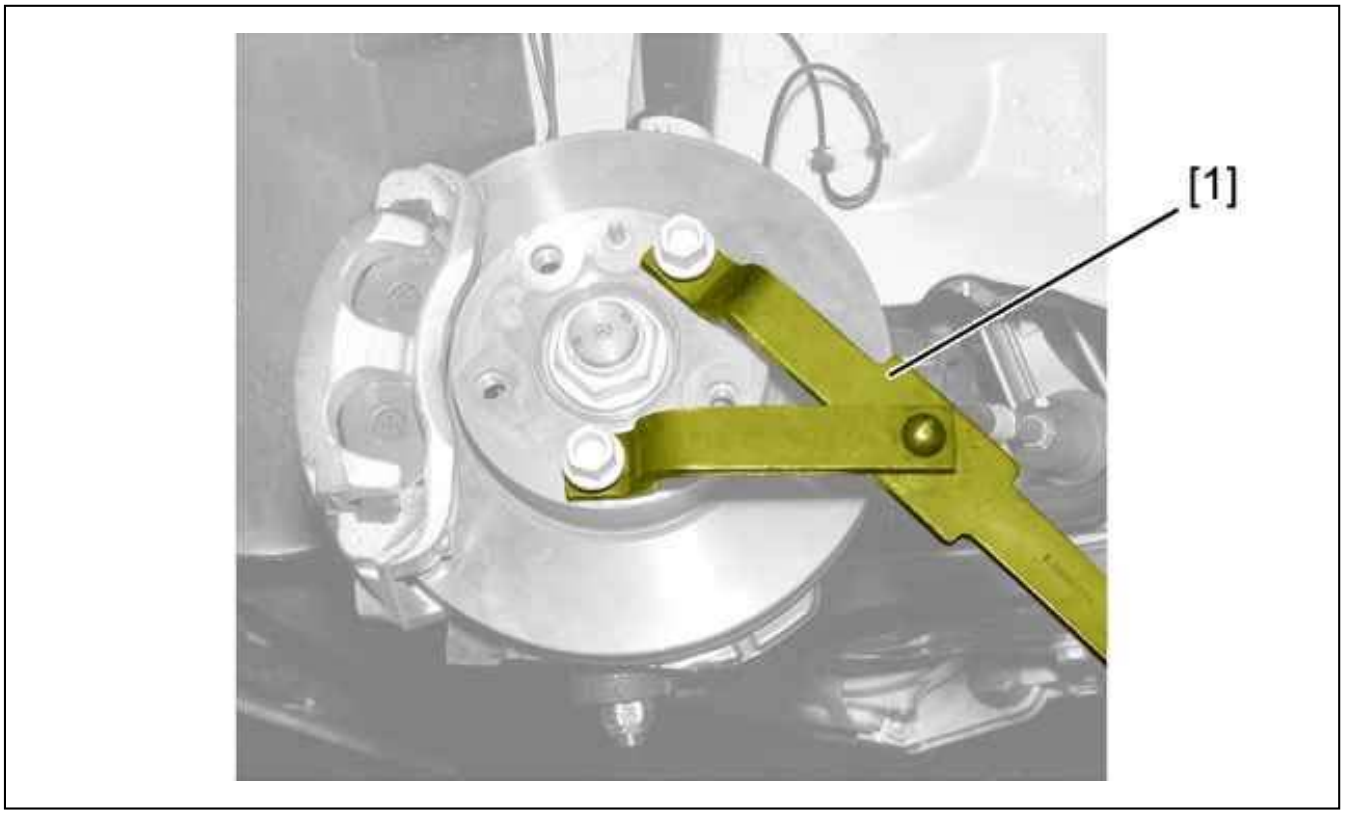

Figure : B3FP7L5D

Immobilise the hub from rotation using tool [1].
Remove :

- The drive shaft nut
- The tool [1]

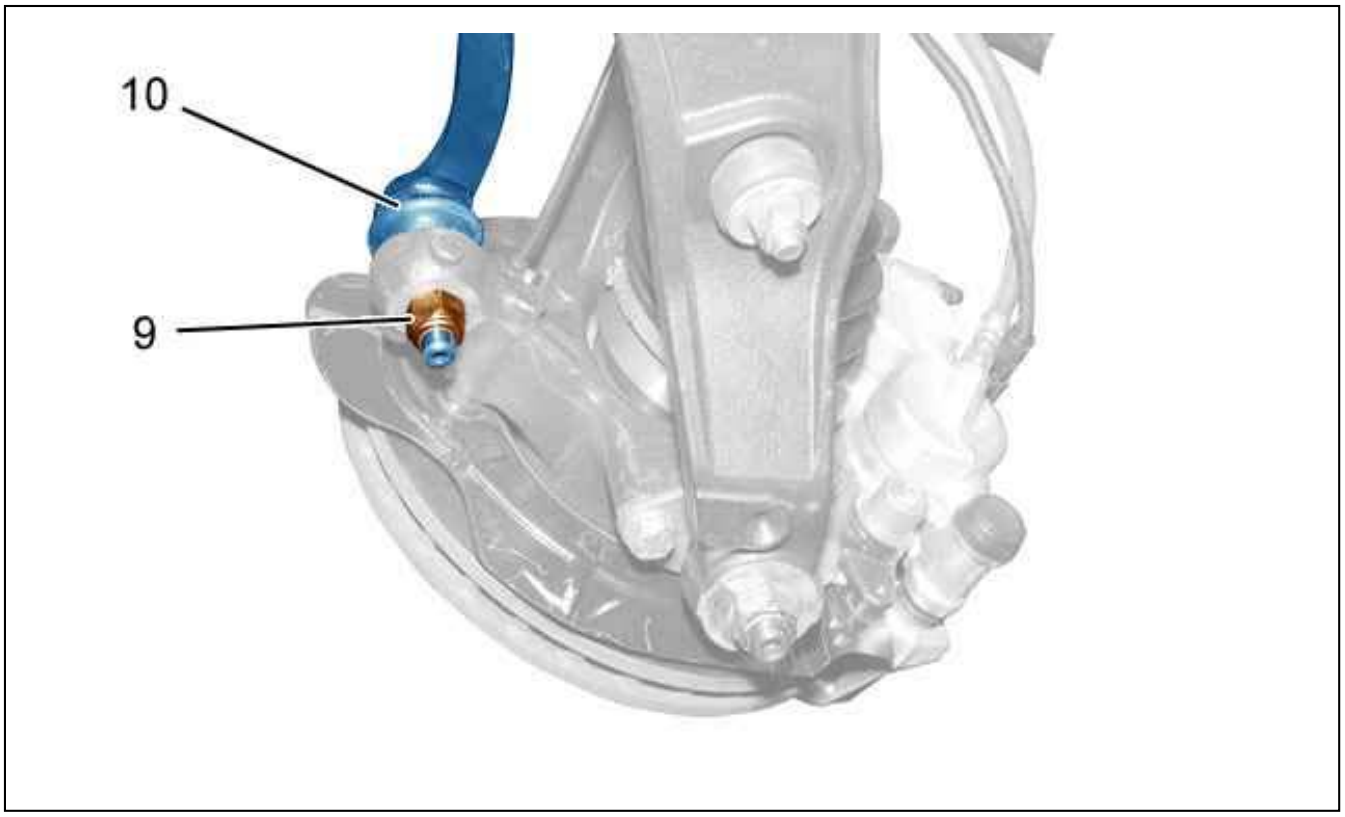

Figure : B3FP7L6D

Remove the nut (9).
Uncouple the steering ball-joint (10) ; Using tool [2].

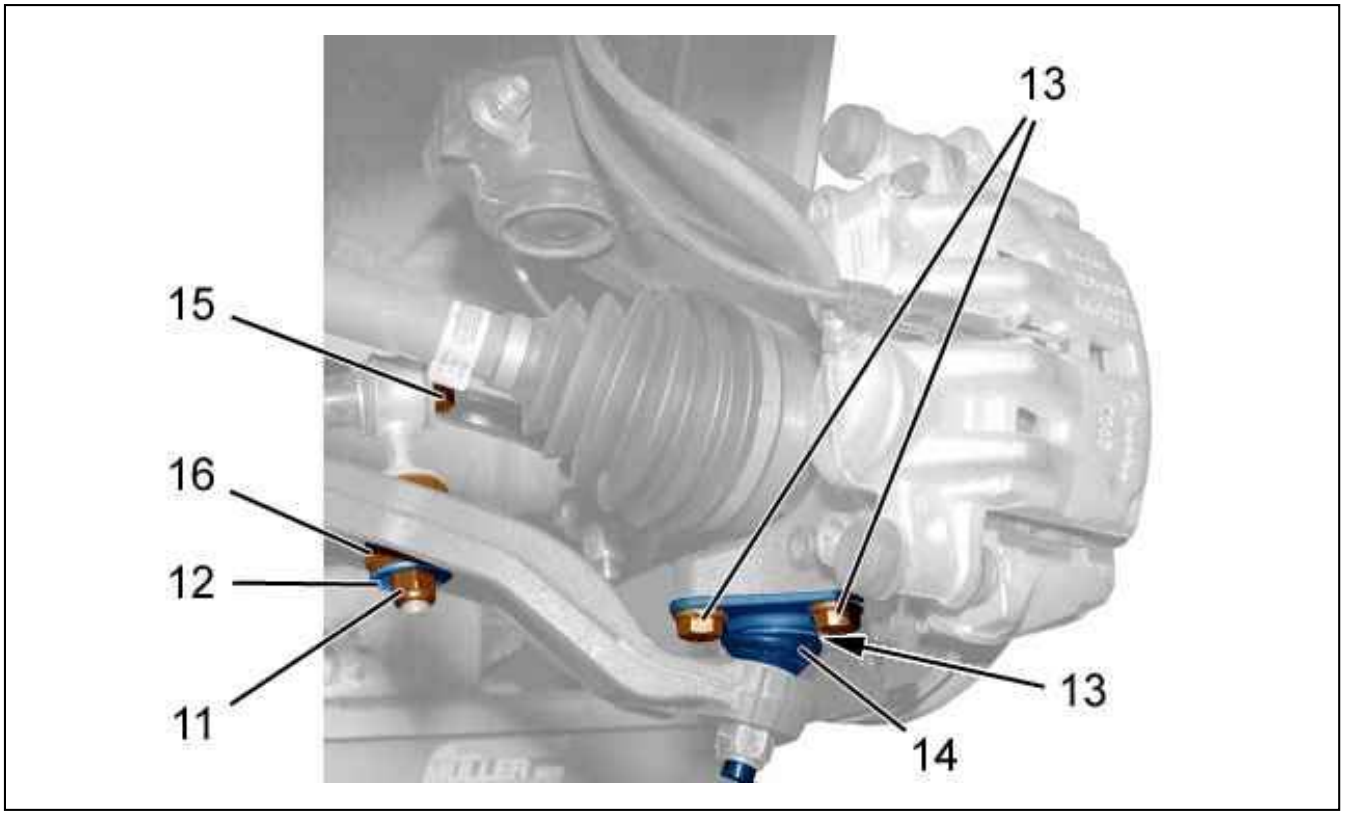

Figure : B3FP7L7D

Remove :

- The nut (11)
- The washer (12)
- The silentblock (16)

Unscrew nut (15).
Remove the 3 bolts (13).
Move aside the ball-joint housing (14).
Detach the drive shaft from the hub.

CAUTION : Keep the transmission in position.

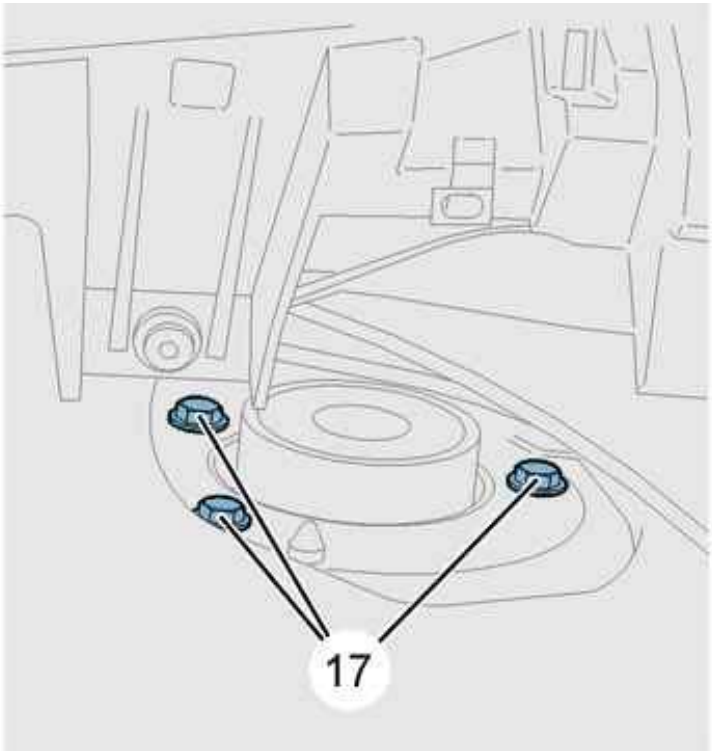

Figure : B3BP1CRD

Remove :

- The bolts (17)
- The suspension unit

3. Refitting

Insert the suspension strut into the wheel arch.
Refit the bolts (17) ; Tighten to 6 ± 2,3 daN.m.
Position the ball-joint housing (14).
Refit the bolts (13) ; Tighten to 11,5 ± 0,4 daN.m.
Refit :

- The silentblock (16)
- The washer (12)
- The nut (11)

Couple up the steering ball-joint (10).
Refit the nut (9) ; Tighten to 8 ± 0,7 daN.m.

Refit The drive shaft nut .
Immobilise the hub from rotation using tool [1].
Tighten the driveshaft nut to 47,5 ± 4,75 m.daN.
Remove the tool [1].

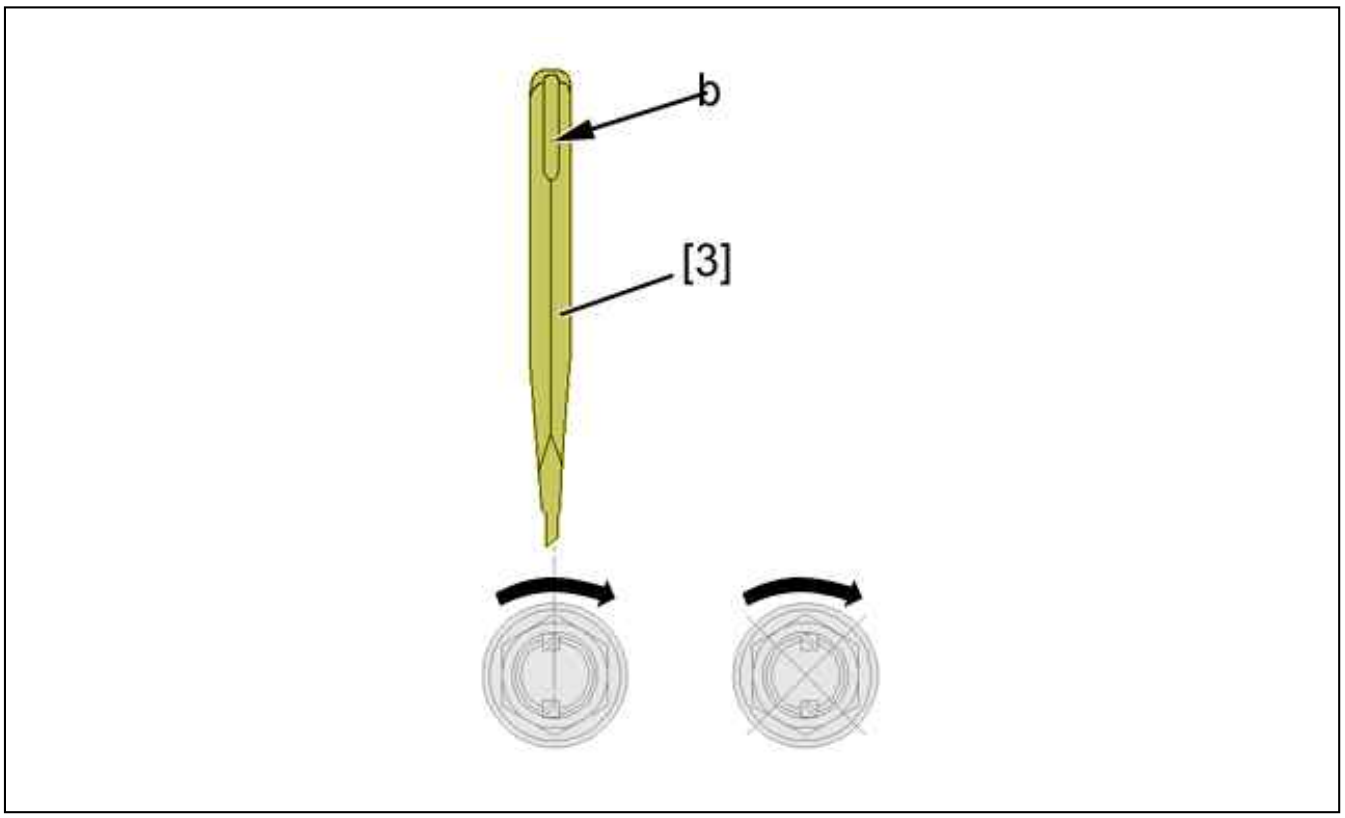

Figure : B2FP06MD

Lock each drive shaft nut with the help of tool [3].

N.B. : The flat part "b" of the tool should always face outwards.

CAUTION : The nut collar must be locked in the opposite direction to tightening.

Refit :

- The brake caliper (8)
- The new bolt (7) Pre-coated with a thread-locking product ; Tighten to 3,4 ± 0,2 daN.m

Reposition and reconnect :

- The electrical harness (at "a")
- The brake hose
- The clip (6)

Refit :

- The brake pads (see the relevant operation)
- The front wheel sensor (4) (see the relevant operation)
- The (5) bolt ; Tighten to 0,8 ± 0,3 daN.m

3.1. On the left-hand side

Refit The bottom trim (1) (see the relevant operation).
Refit the built-in systems interface (2) (see the relevant operation).

3.2. On the right-hand side

Refit the lower right-hand glove box (3) (see the relevant operation).

3.3. Common operations

Fit the wheels.
Return the vehicle to its wheels.
Tighten :

- The nut (11) to 5,6 ± 0,5 daN.m
- The nut (15) to 5,6 ± 0,5 daN.m

Tighten the wheel bolts .

DISMANTLING - RE-ASSEMBLY : FRONT DAMPER - SPRING ASSEMBLY (ON THE WORK BENCH)

ESSENTIAL : Observe the safety and cleanliness recommendations .

1. Tooling

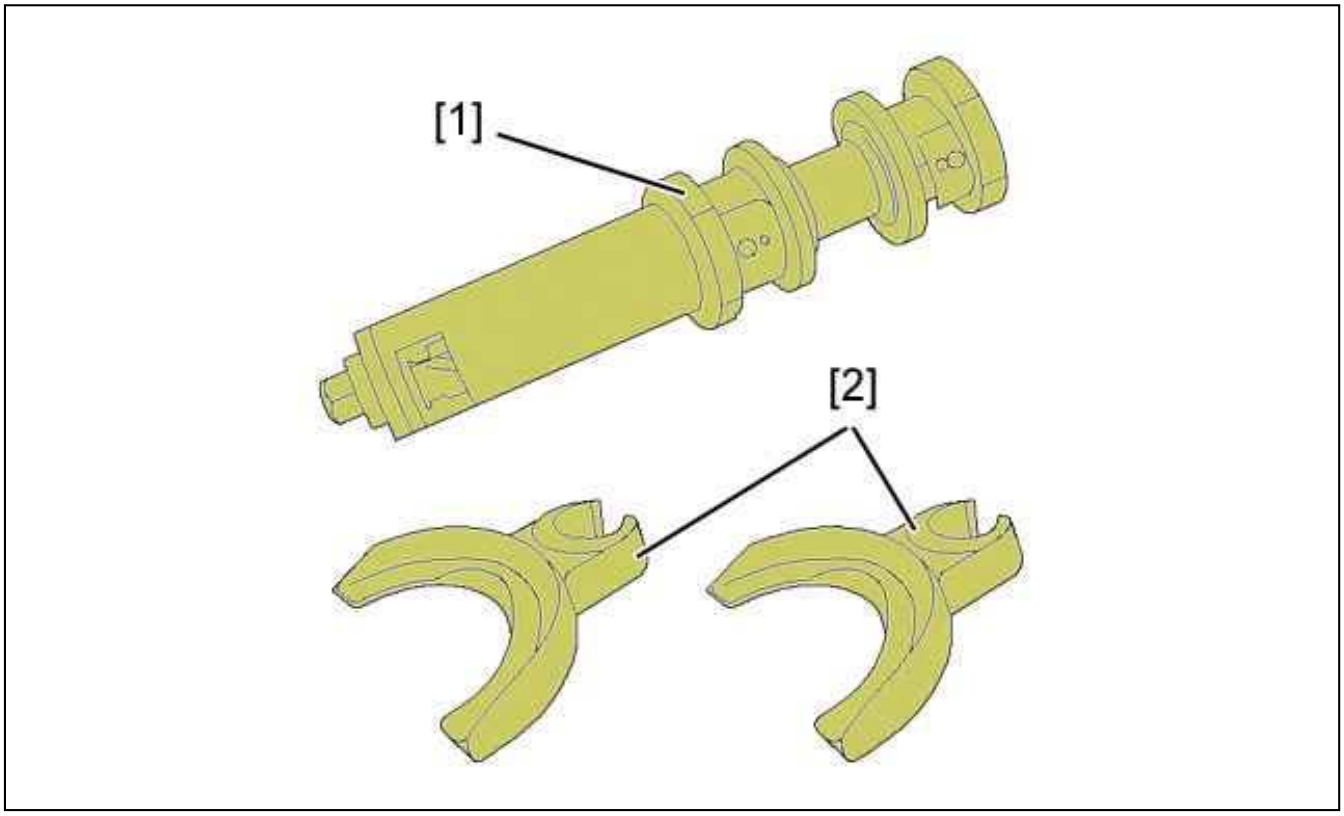

Figure : E5AP34QD

Reference	Designation	Reference	Reference
[1]	compressor	4137-T.M90	MG M90
[2]	Jaws	4137-T.M3	MG M3

CAUTION : Check the presence and condition of the rubber protections on the fixed and sliding cups of the spring compressor.

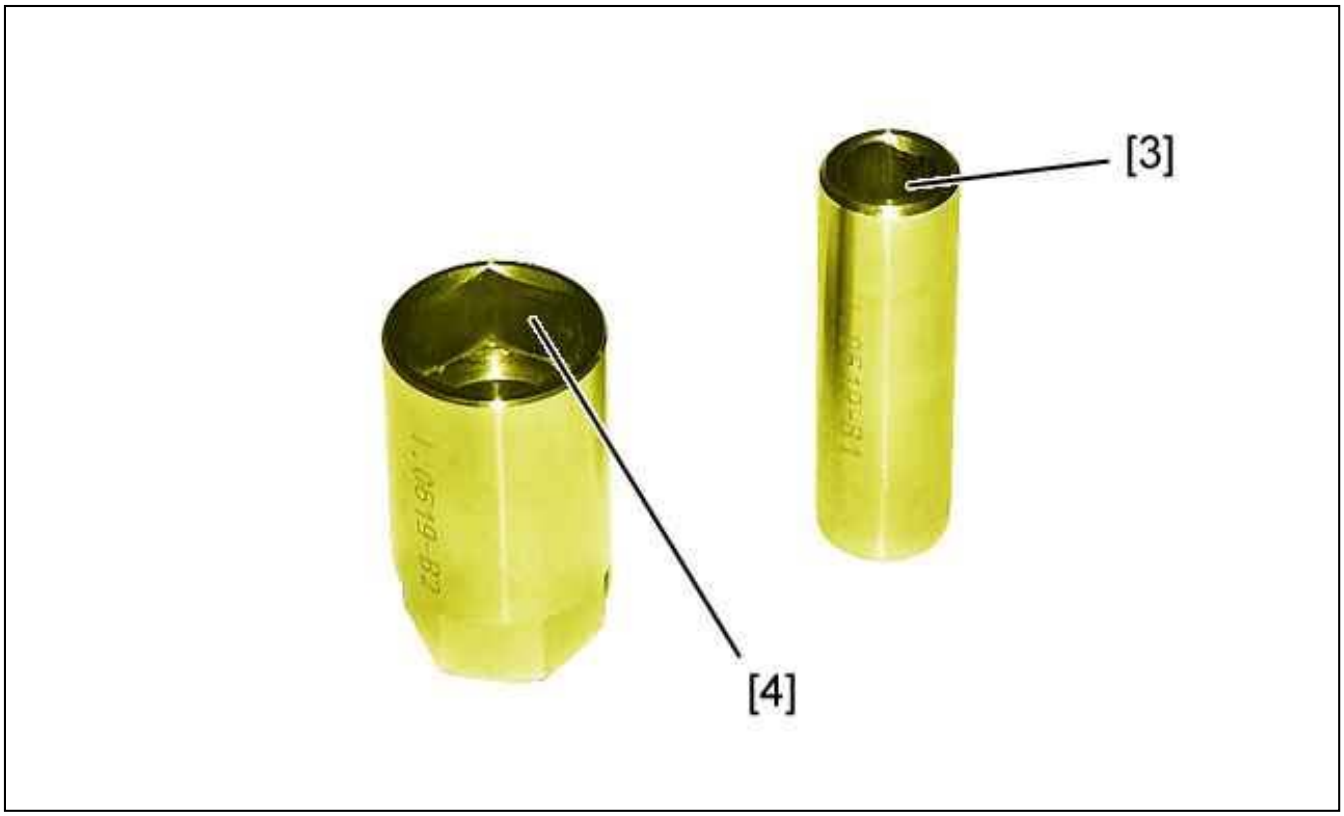

Figure : E5AP34RD

Reference	Designation	Reference	Reference
[3]	Damper rod retaining socket	5709-T.S1	(-).0619 S1
[4]	Socket for damper nut	5709-T.S2	(-).0619 S2

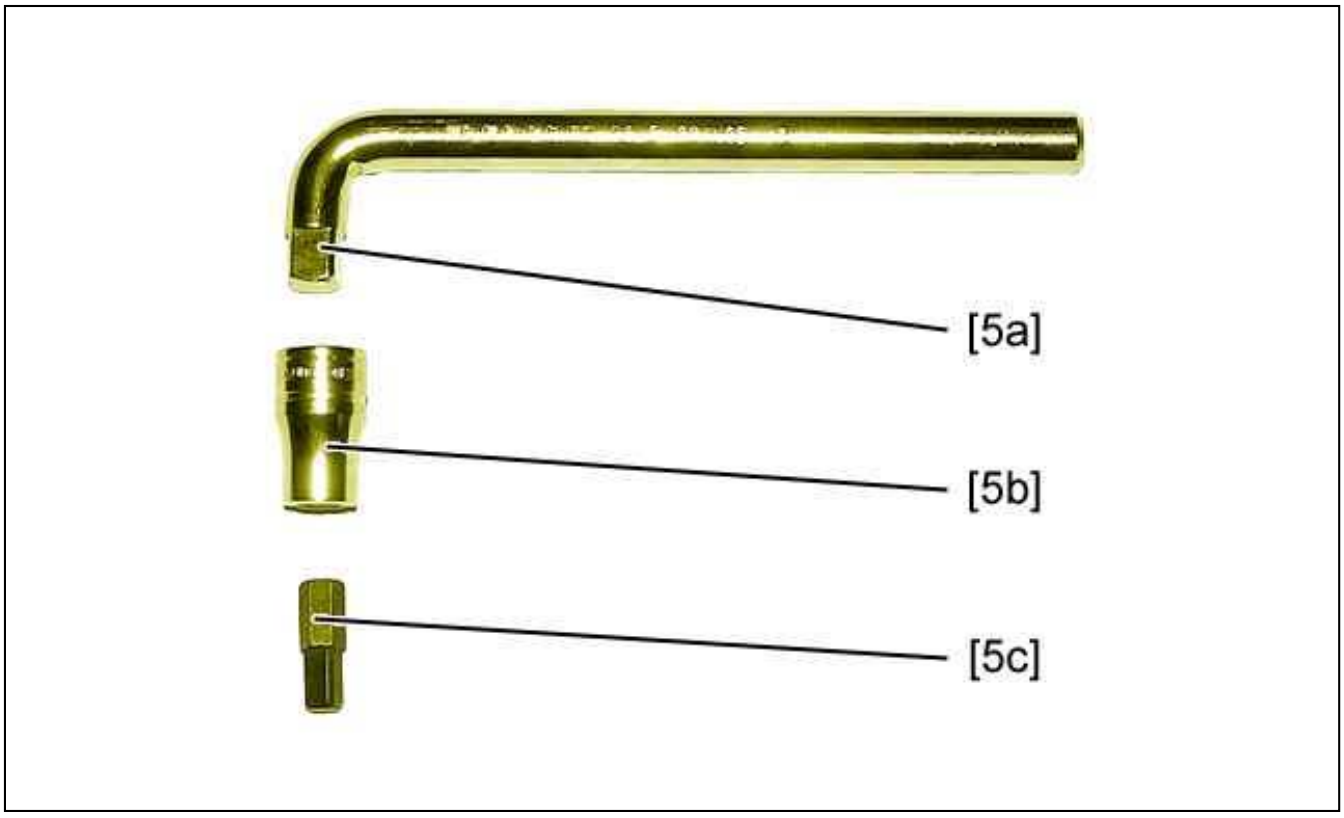

Figure : E5AP34SD

Reference	Designation	Reference	Reference
[5]	pivot spreading tool (Type FACOM DS) (DS.J5) kit	5709-T T	(-).0619 T
[5a]	Spanner Facom (type DS.P)	-	-
[5b]	socket Facom (type J.236)	-	-
[5c]	adaptor Facom (type DS.11A)	-	-

2. Removing

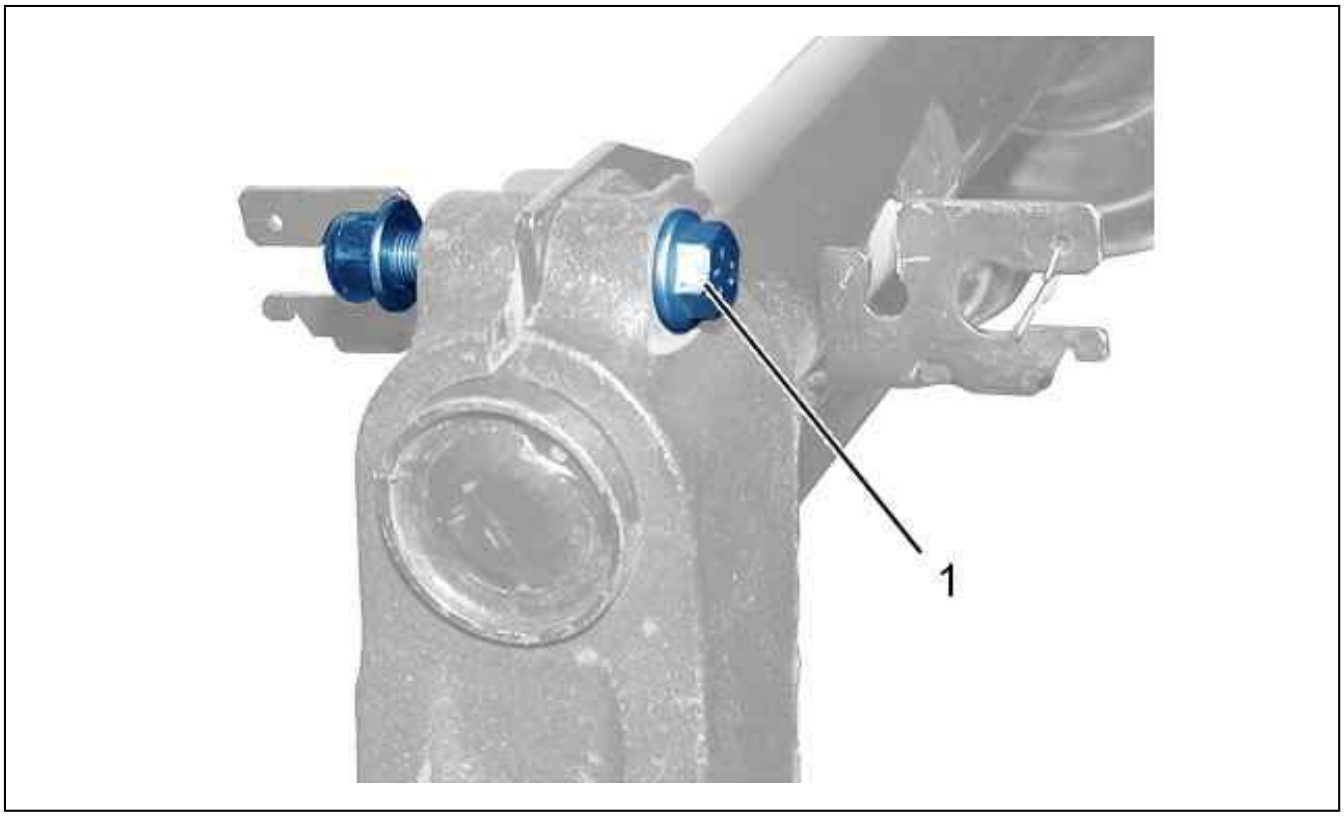

Figure : B3BP1D5D

Remove the bolt (1).

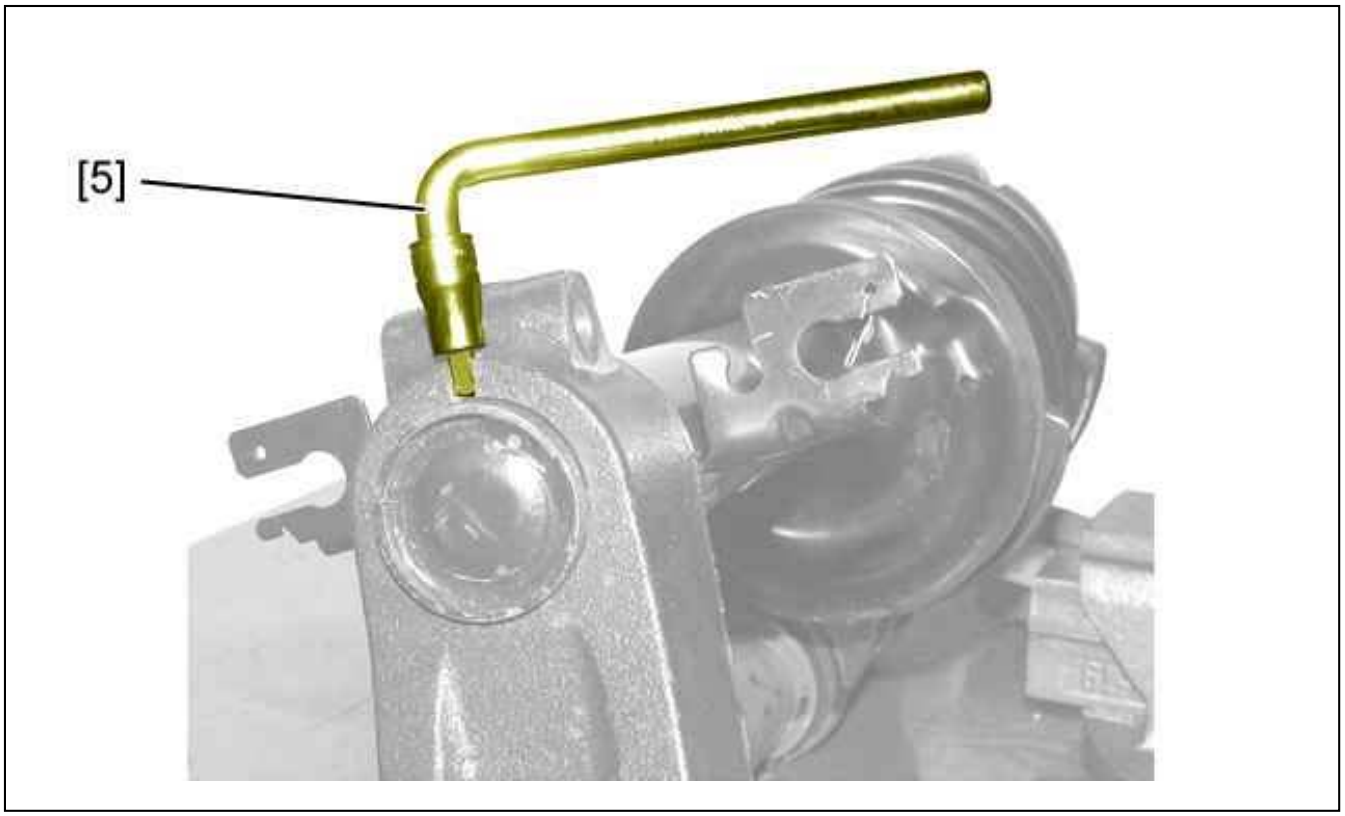

Figure : B3BP1D6D

Position the tool [5] in the front pivot opening .
Turn a quarter turn to open the pivot.
Uncouple the front pivot .
Remove the tool [5].

CAUTION : Do not put a suspension spring in direct contact with any metallic object or tool.

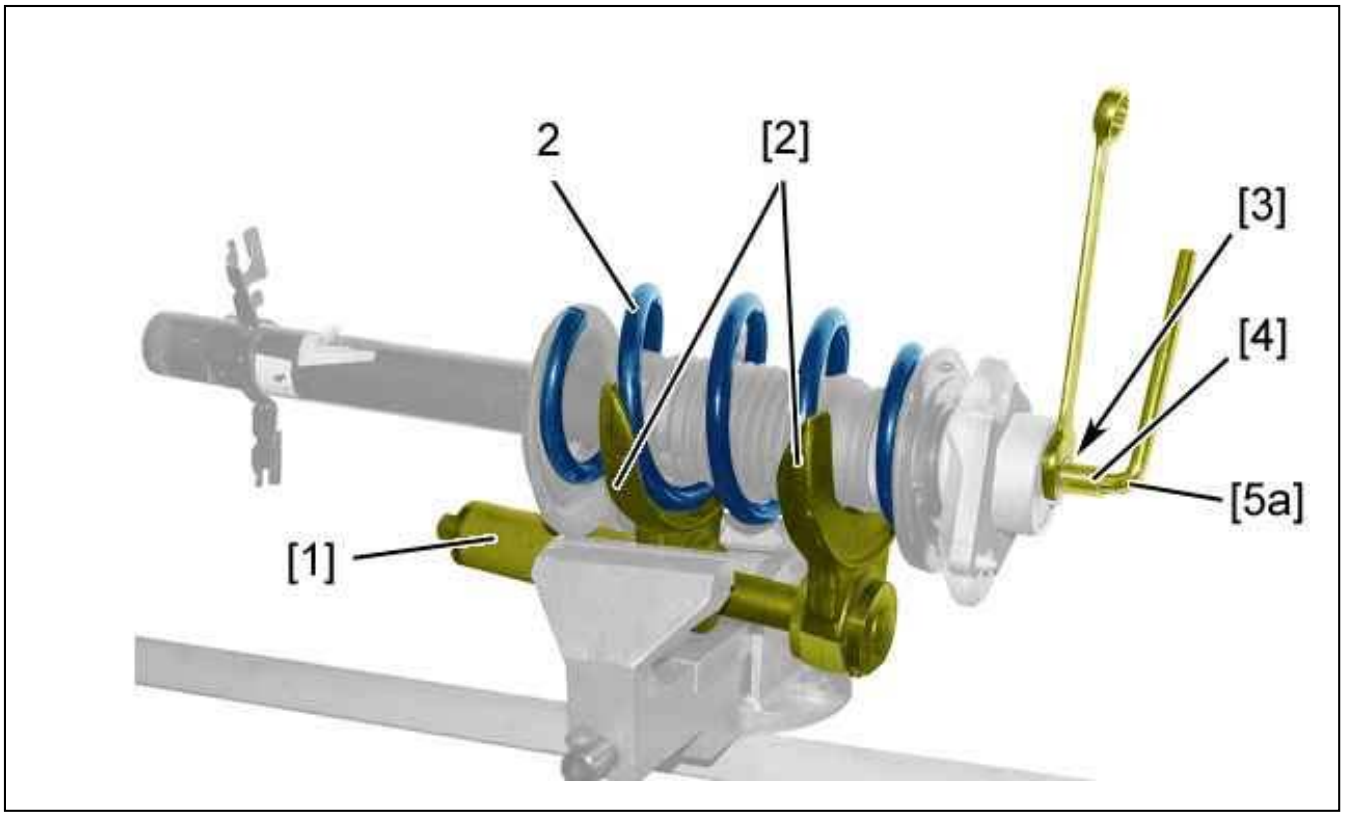

Figure : B3BP1D7D

Grip compressor [1] equipped with its claws [2] in a vice.
Tighten against the fixed claw.
Compress the spring (2) ; Using the tools [1], [2].
Slacken the damper rod nut ; Using the tools [3], [4], [5a].

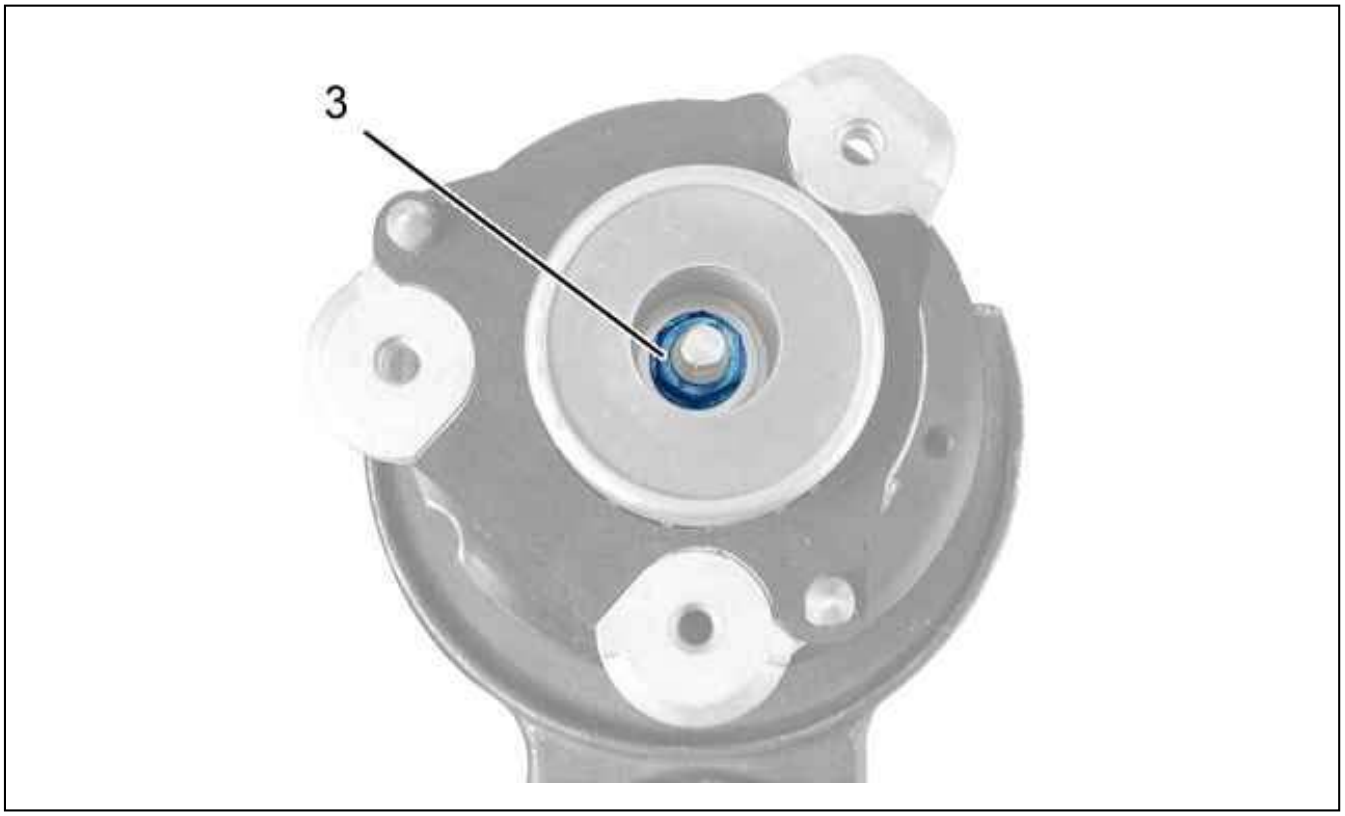

Figure : B3BP1D8D

Remove the nut (3) ; Using the tools [3], [4].

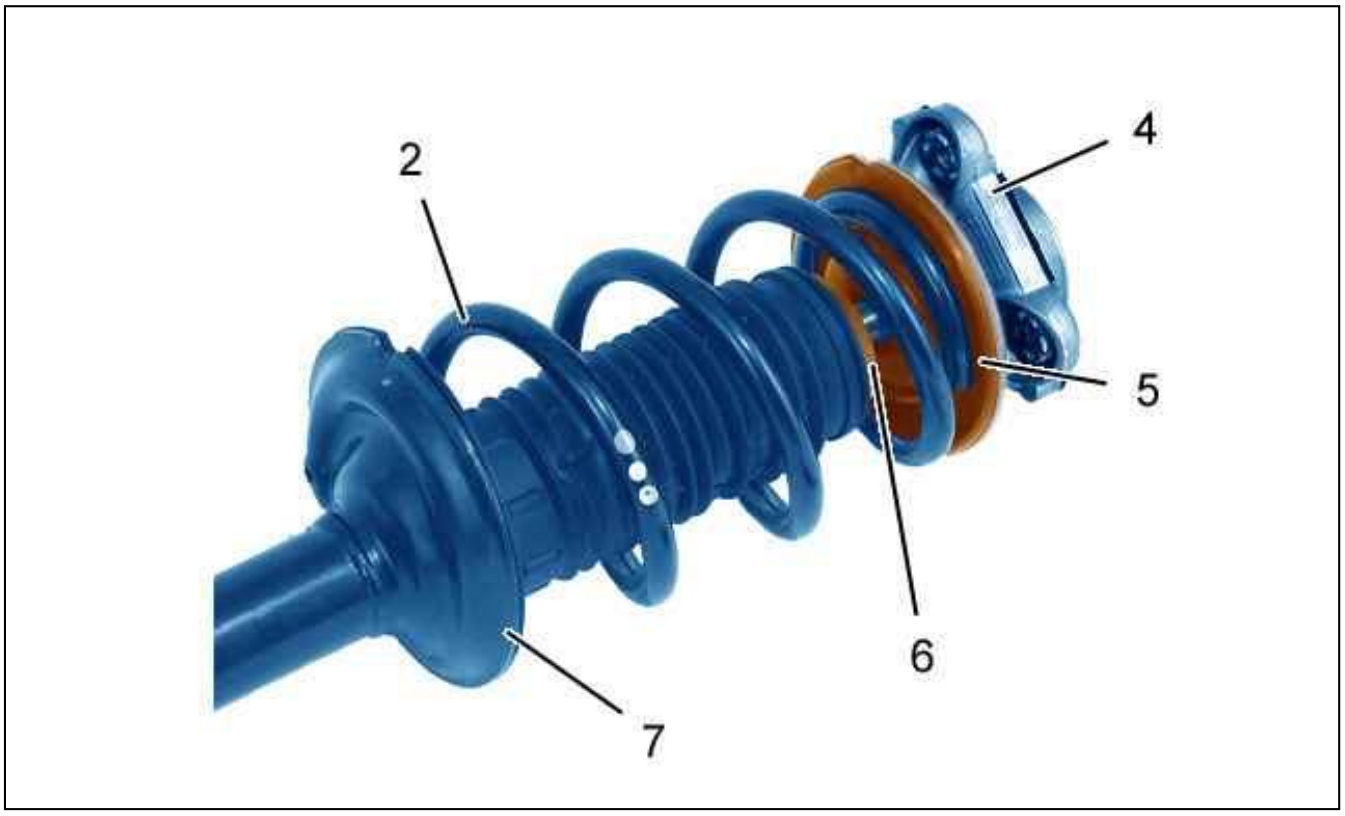

Figure : B3BP1D9D

Remove :

- The damper bracket (4)
- The thrust cup (5) fitted with its rubber protector
- Damper (7) provided with bump stop (6)

Release the spring (2) ; Using the tools [1], [2].

3. Refitting

CAUTION : Always fit new Nylstop nuts.

CAUTION : Apply water-repellent grease to the ball stop (8) (index G1).

Grip compressor [1] equipped with its claws [2] in a vice.
Tighten against the fixed claw.
Compress the spring (2) ; Using the tools [1], [2].

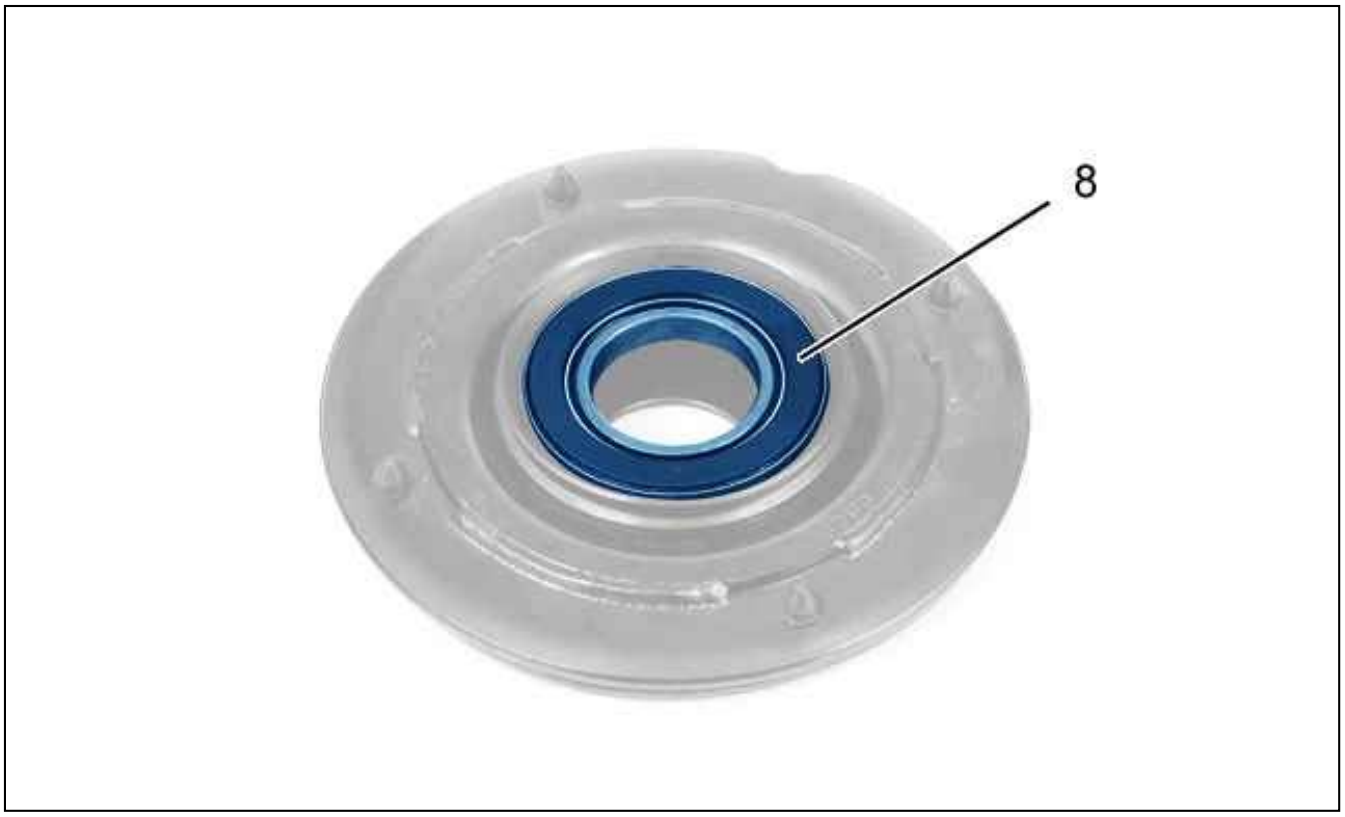

Figure : B3BP1DAD

Check the condition of the ball stop (8).
Replace the ball stop (8) (if necessary).

CAUTION : Observe the direction of fitting of the ball stop (8).

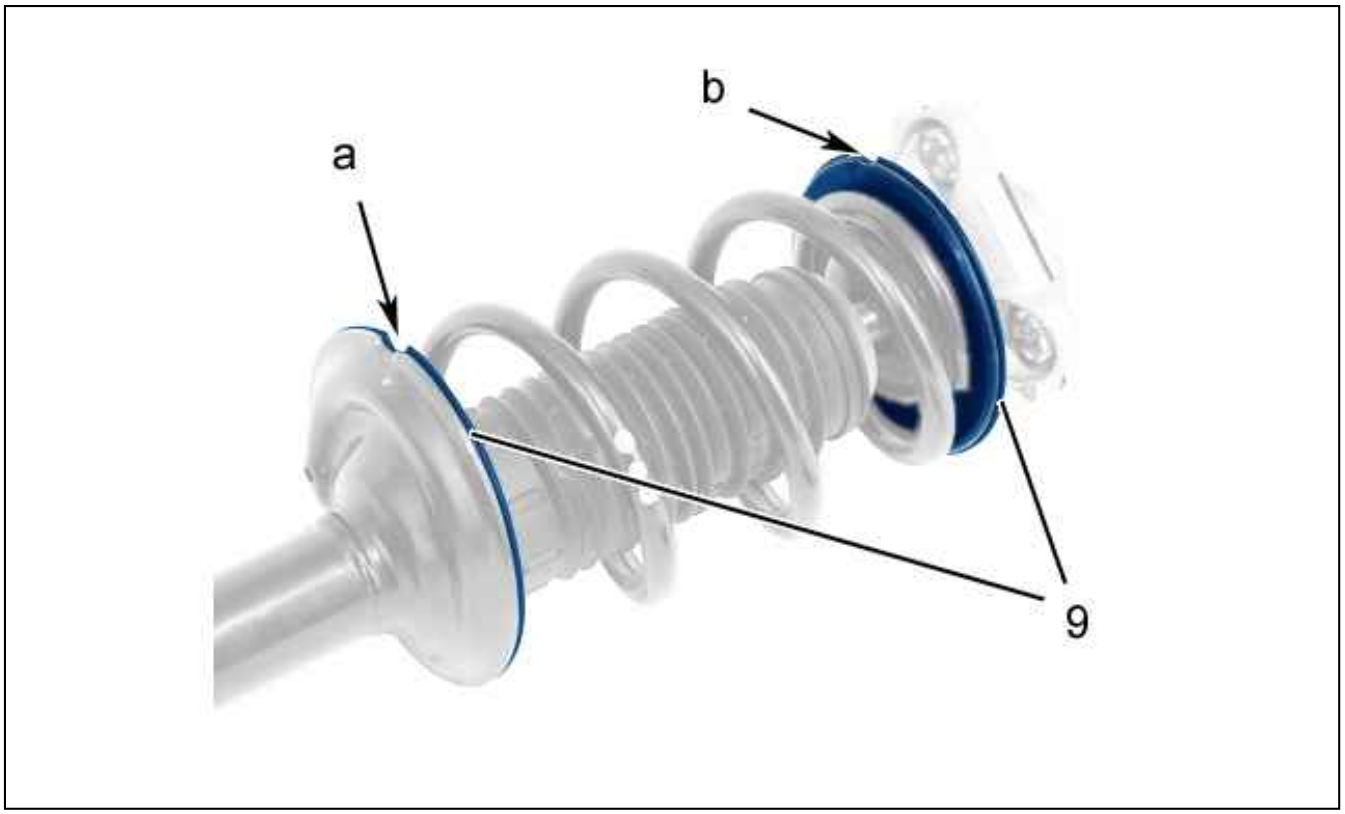

Figure : B3BP1DBD

CAUTION : Check the condition of the suspension spring (absence of signs of impact, scratches or corrosion spots) The paint coating on the suspension spring should not be damaged, leaving the metal bare. Check that the rubber protectors (9) are present and in good condition.

CAUTION : Observe the positioning of the rubber protectors (9) (as "a", "b").

Refit :

- Damper (7) provided with bump stop (6)
- The thrust cup (5) fitted with its rubber protector
- The damper bracket (4)
- The nut (3) ; Using the tools [3], [4]

Tighten the nut (3) to 9 ± 0,8 daN.m.
Release the spring (2) ; Using the tools [1], [2].
Position the tool [5] in the front pivot opening .
Turn a quarter turn to open the pivot.
Couple the front pivot .

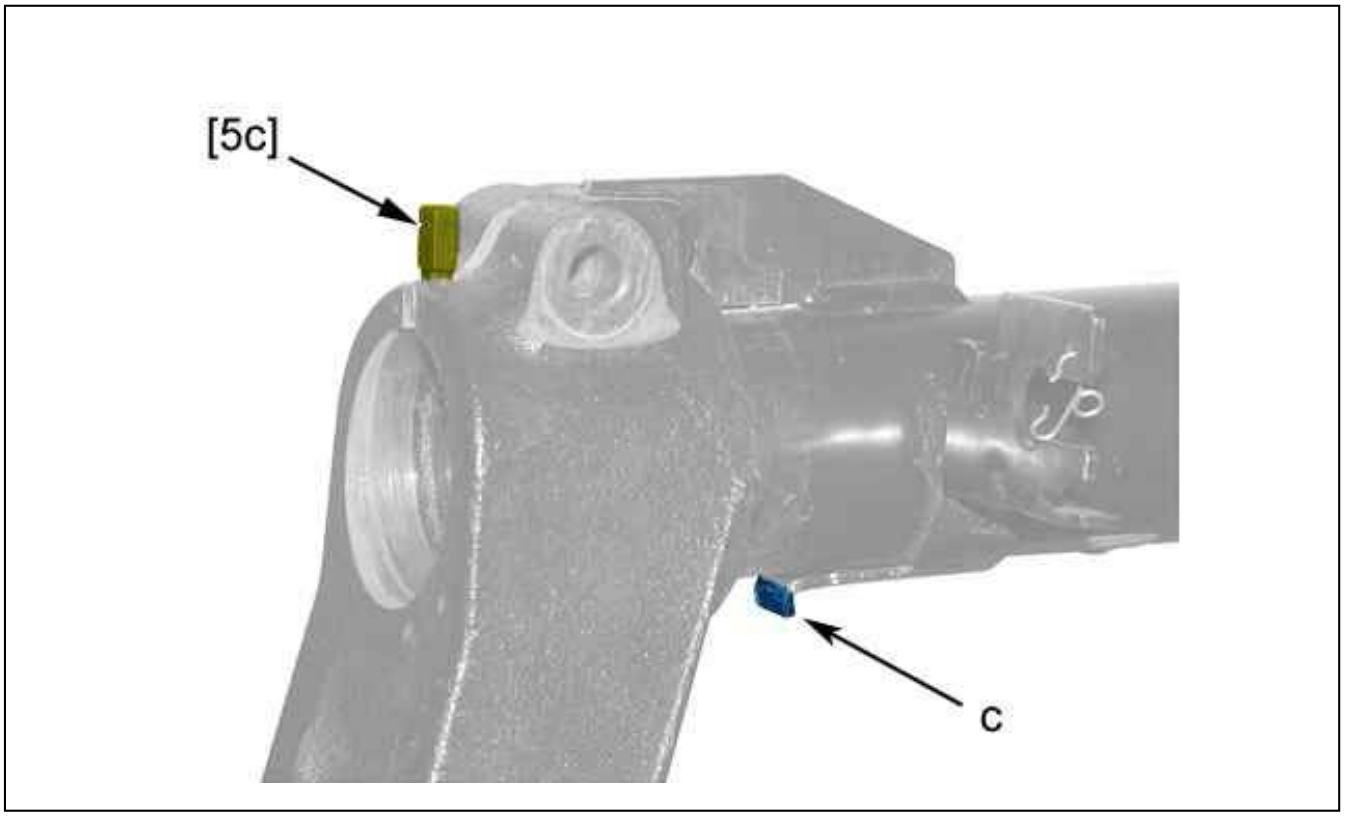

Figure : B3BP1DCD

Bring the front pivot as far as it go on the damper (at "c").
Refit bolt (1).
Remove the tool [5].
Tighten the bolt (1) to 12 ± 0,4 daN.m.

REMOVING - REFITTING : FRONT ANTI-ROLL BAR ROD

ESSENTIAL : Observe the safety and cleanliness recommendations .

ESSENTIAL : To remove the anti-roll bar rods (even partially) use the following procedure to avoid destroying the rod .

CAUTION : The use of impact wrenches is strictly prohibited.

1. Tooling

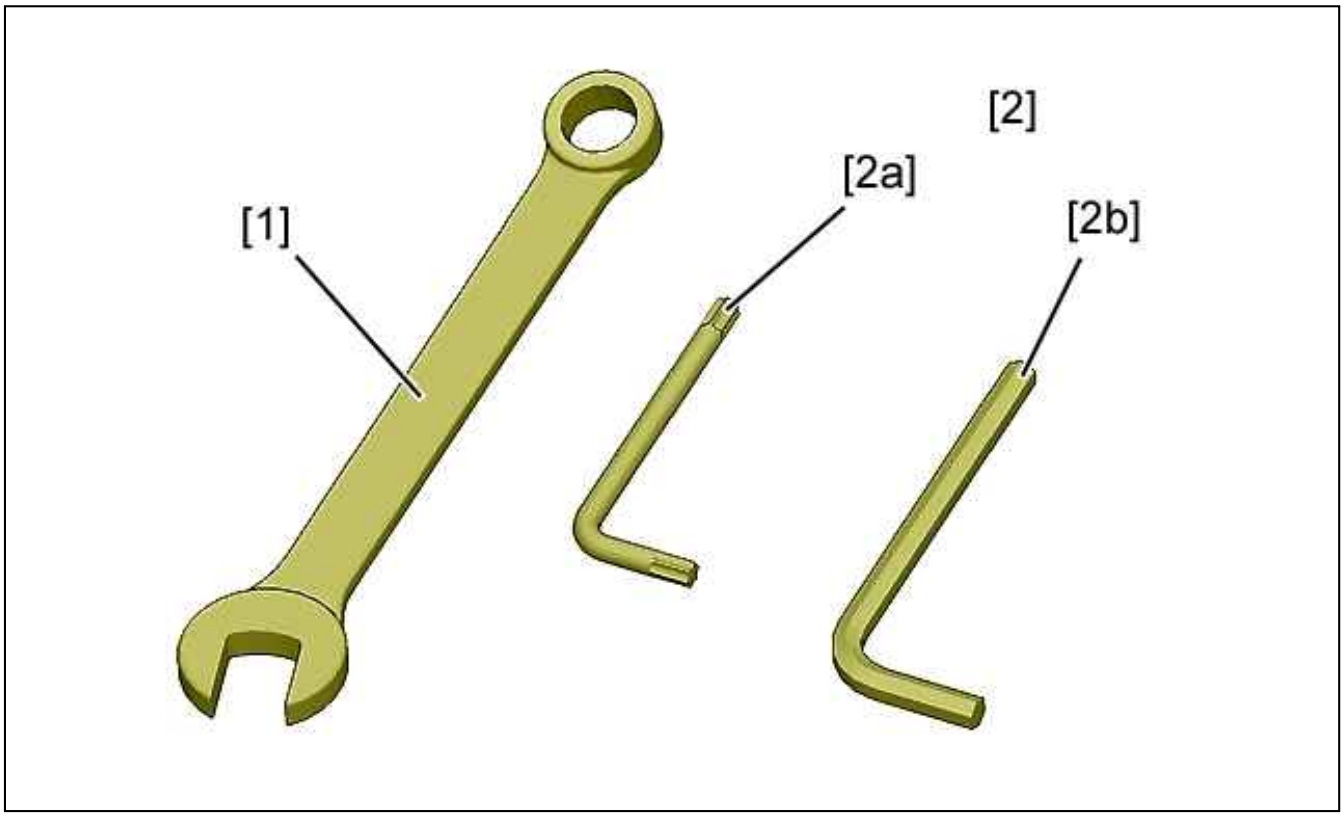

Figure : E5AM05DD

[1] Combination spanner.
[2] keys.
[2a] Spanner TORX (according to the assembly operations).
[2b] Spanner BTR (according to the assembly operations).

2. Removing

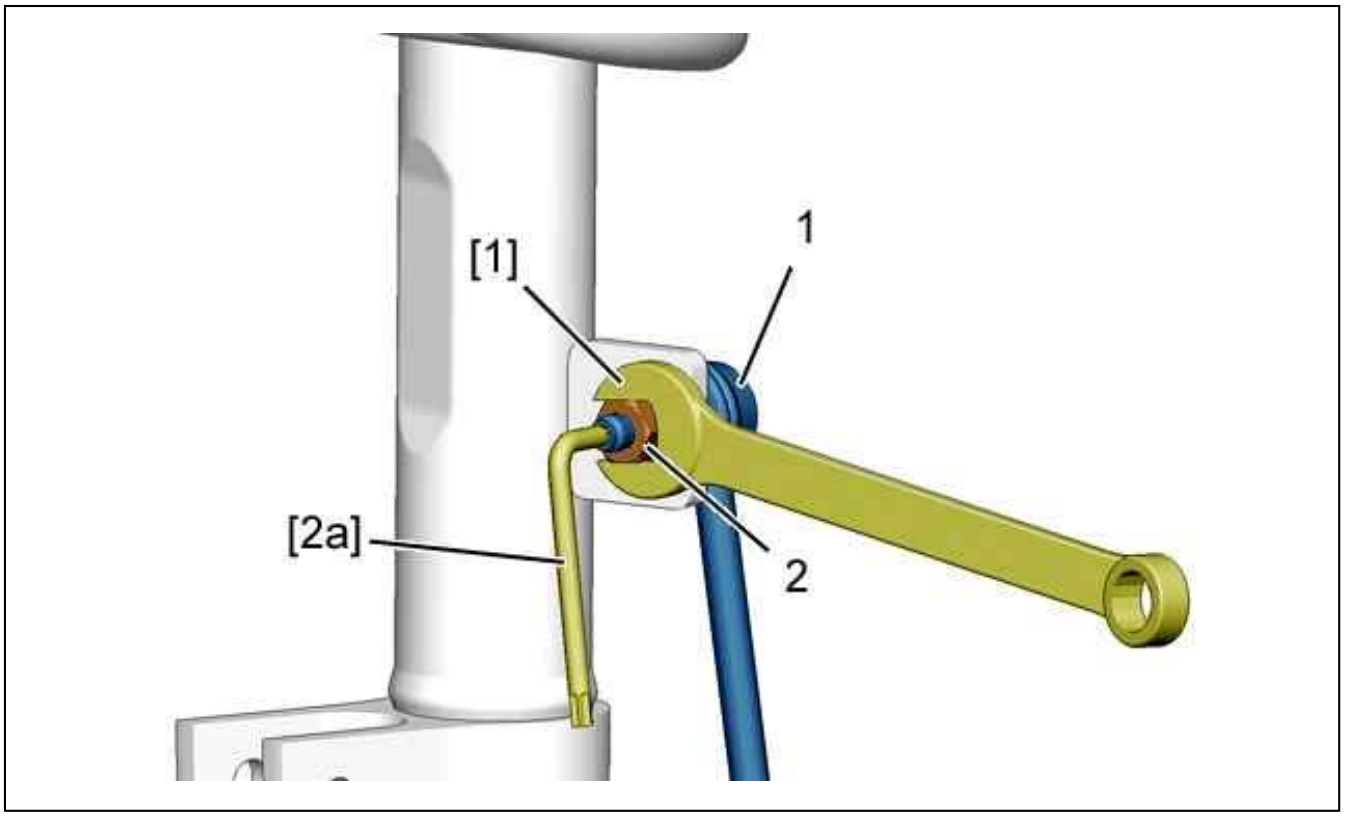

Figure : B3BM00SD

CAUTION : Risk of damaging the ball joint of the rod (1).

Proceed as follows :

- Immobilise the tail of the ball joint ; Using tool [2]
- Remove the nut (2) ; Using tool [1]
- Disengage the rod (1)

3. Refitting

CAUTION : Risk of damaging the ball joint of the rod (1).

Proceed as follows :

- Engage : The push rod (1)
- Engage : The nut (2) (new) (without tightening)
- Immobilise the tail of the ball joint ; Using tool [2]
- Tighten the nut (2) ; Tighten to the specified torque ; Refer to the procedure : Tightening torques (Front suspension)

REMOVING - REFITTING : FRONT SUSPENSION LOWER ARM

1. Recommended tools

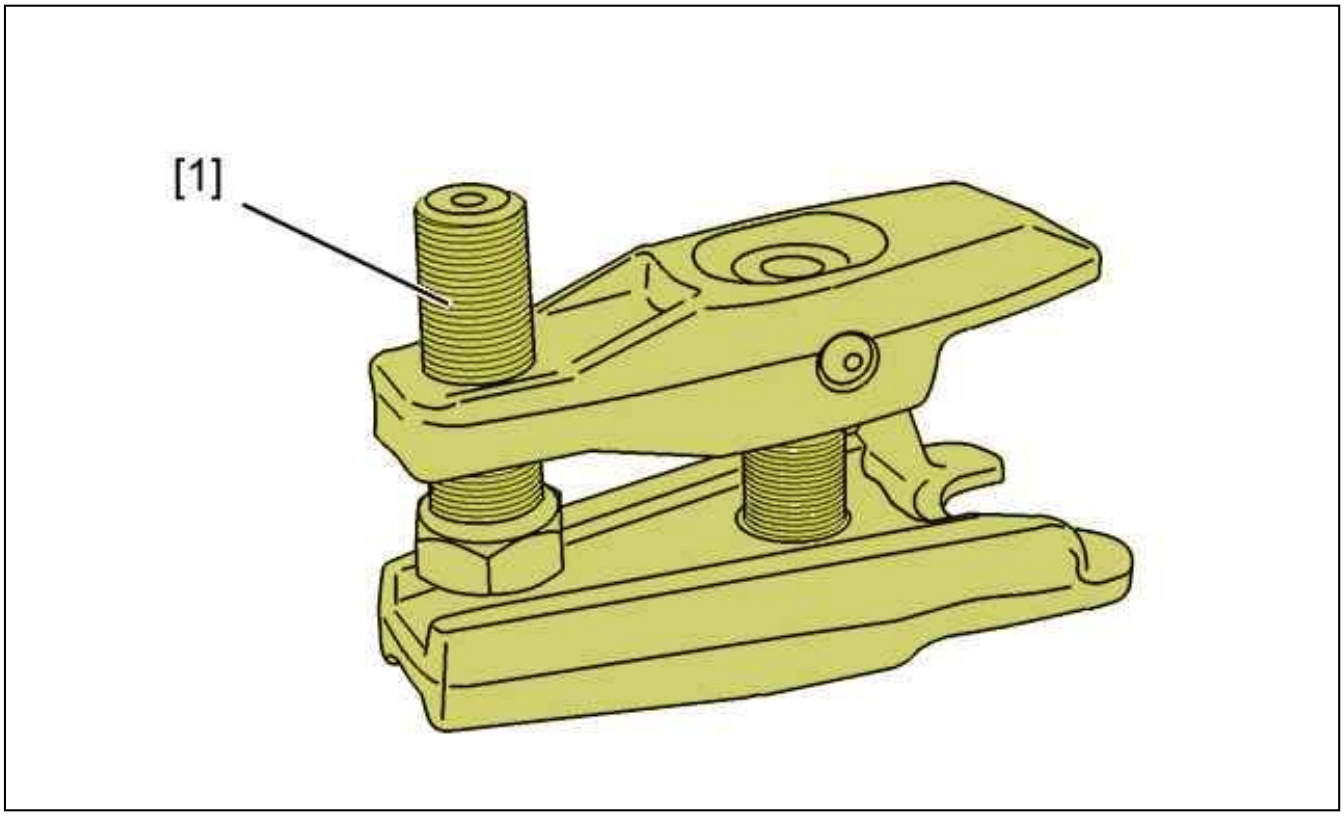

Figure : E5AP2WYD

Reference	Designation	Reference	Reference
[1]	ball-joint extractor	5707-T	(-).0919

2. Removing

Untighten the wheel screws (front).
Lift and support the vehicle with front wheels suspended.
Remove the front wheels.

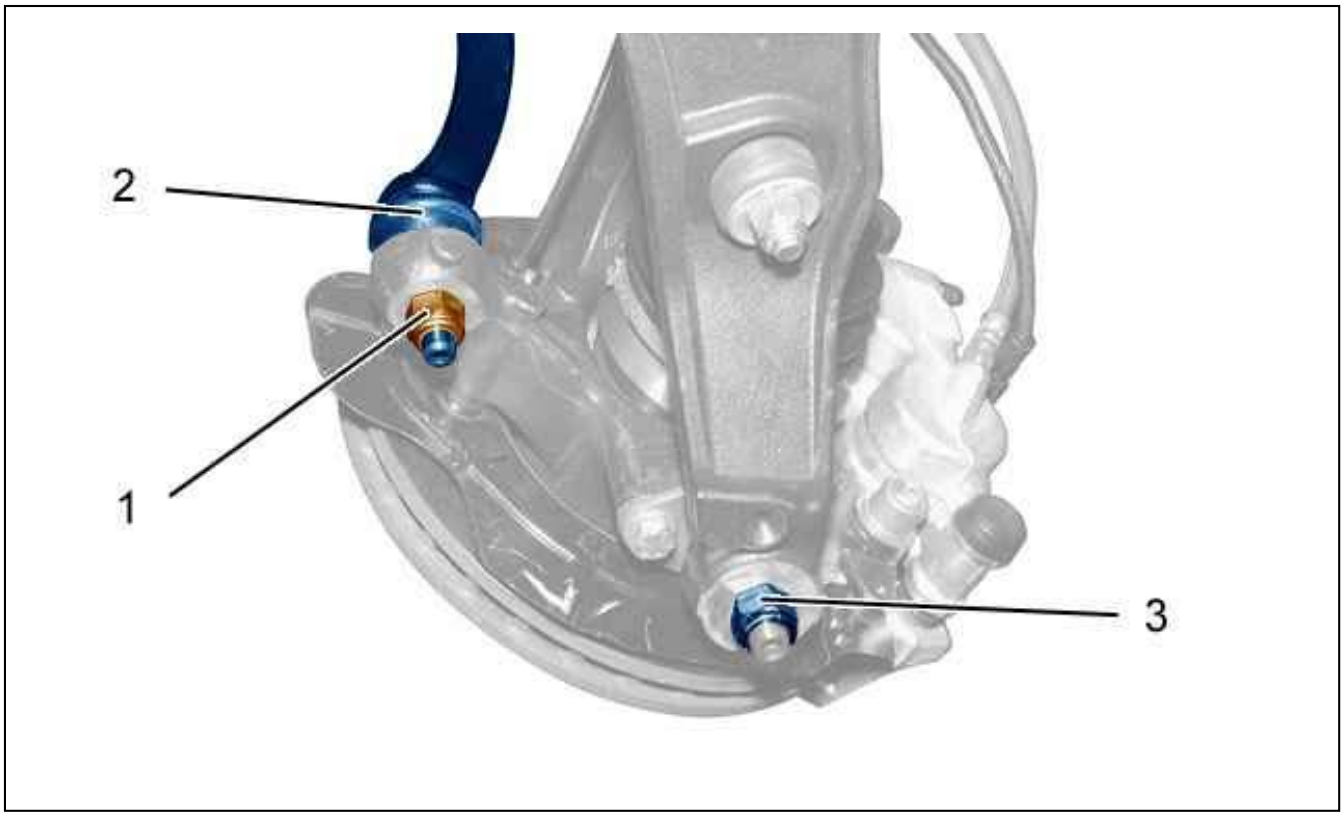

Figure : B3FP7KAD

Remove the nut (1).
Uncouple the steering ball-joint (2) ; Using tool [1].
Unscrew nut (3).

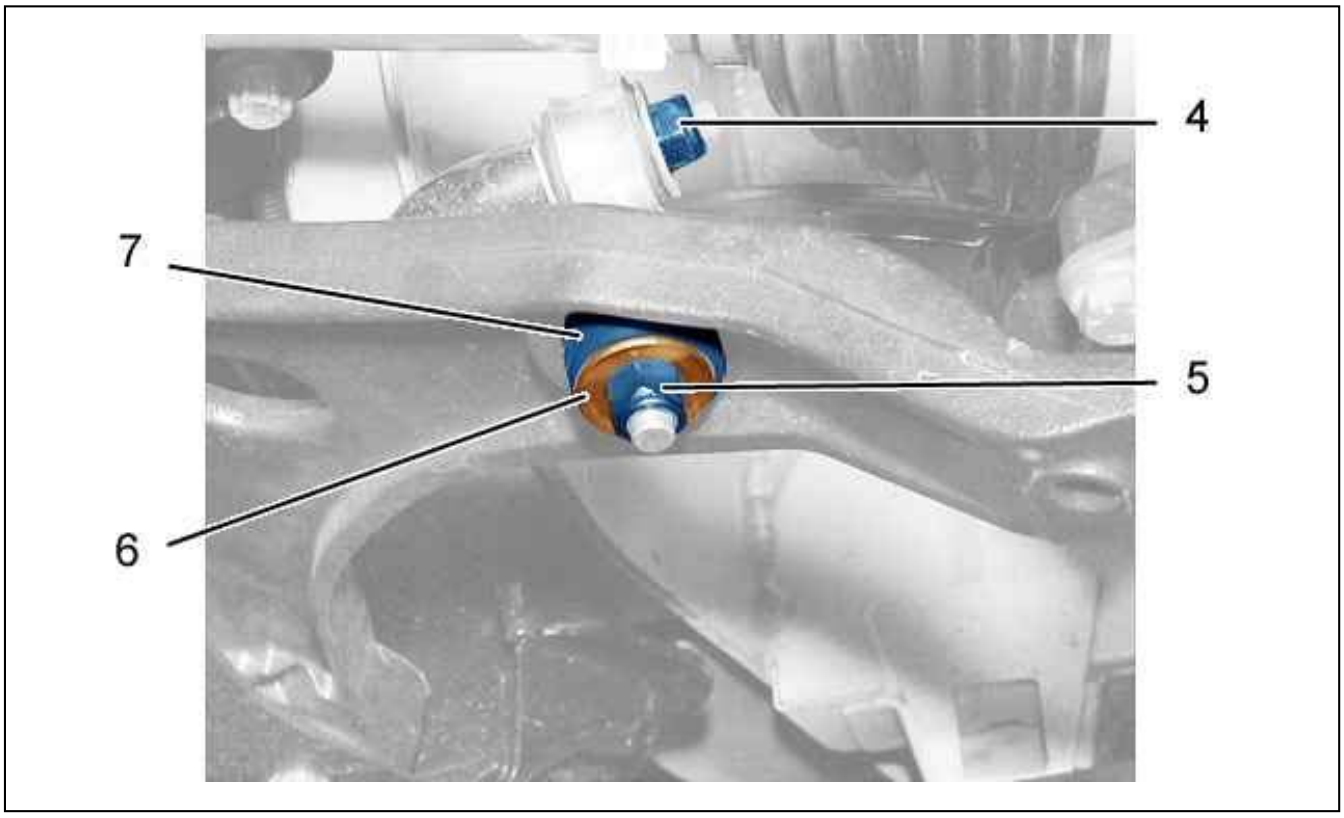

Figure : B3CP0BED

Unscrew nut (4) (on each side).
Remove (on each side) :

- The nut (5)
- The washer (6)
- The silentblock (7)

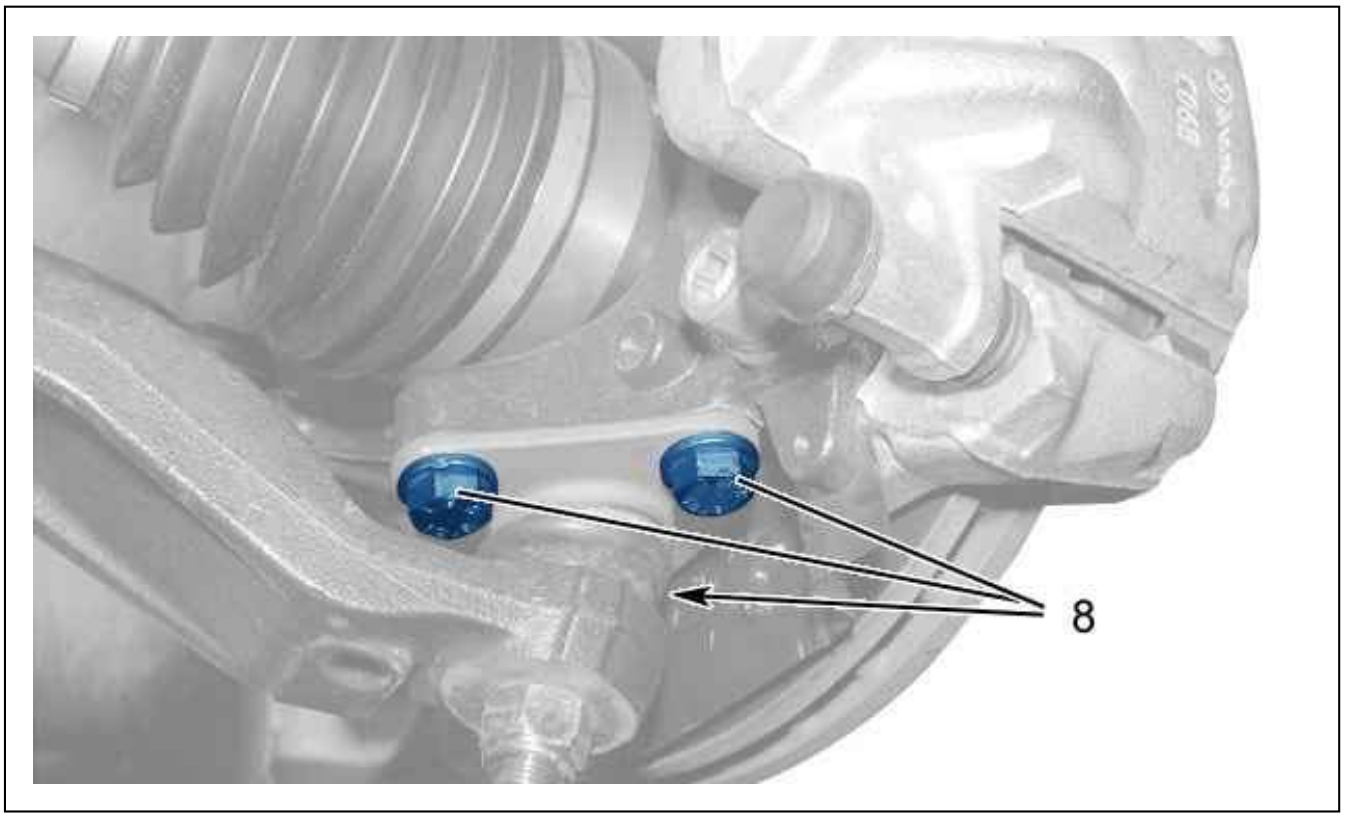

Figure : B3FP7KBD

Remove the 3 bolts (8).
Move aside the front pivot .

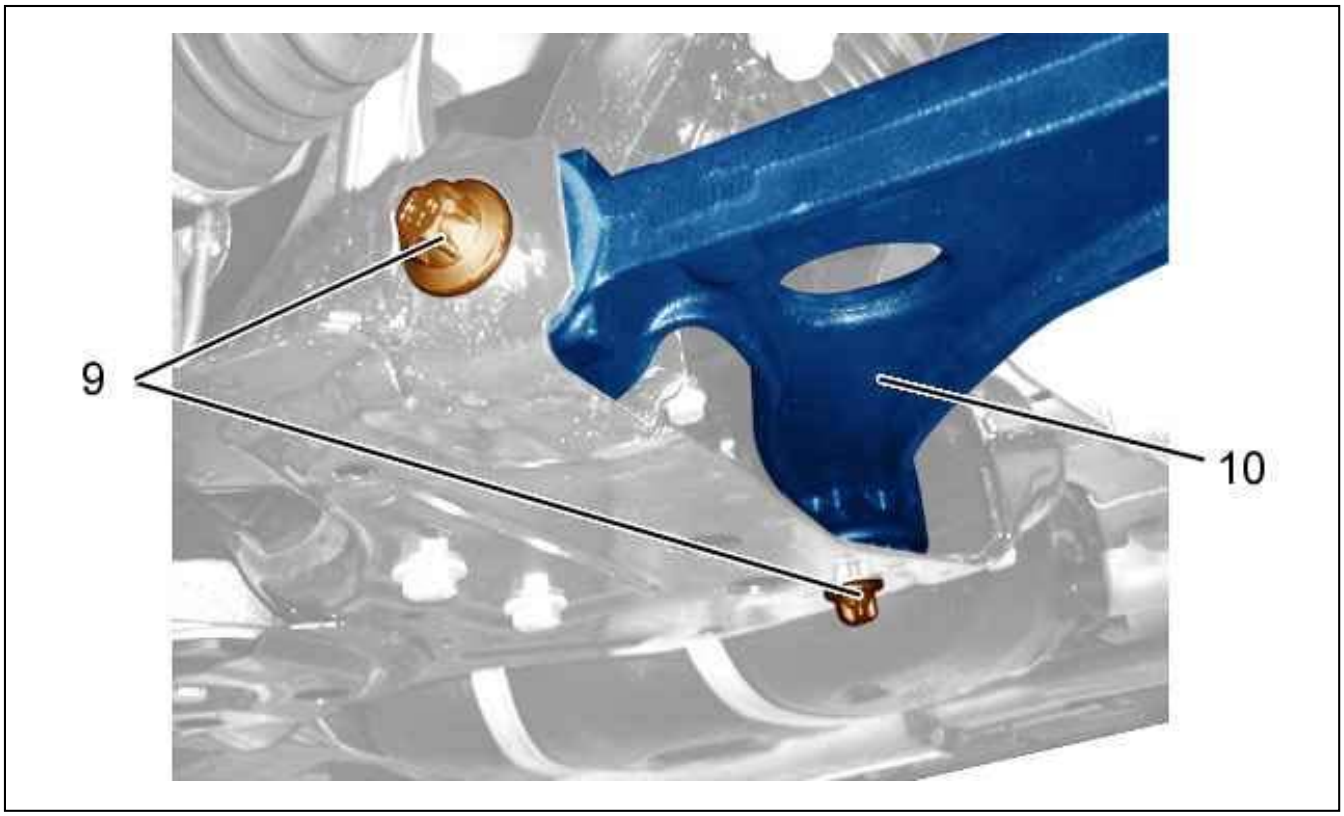

Figure : B3CP0BFD

Slacken the bolts (9).
Remove :

- The bolts (9)
- The front lower suspension arm (10)

Remove the nut (3).
Uncouple the ball joint ; Using tool [1].

3. Refitting

N.B. : Always fit new Nylstop nuts.

Couple the ball-joint to the front lower suspension arm (10).
Refit :

- The nut (3)
- The lower front suspension arm (10) by engaging the anti-roll bar rod
- The bolts (9) (without tightening)
- The 3 bolts (8)

Tighten the bolts (8) to 11,5 ± 0,4 daN.m.
Refit (left and right hand sides) :

- The silentblock (7)
- The washer (6)
- The nut (5)

Tighten the nut (3) to 15 ± 0,5 daN.m.
Couple up the steering ball-joint (2).
Refit the nut (1) ; Tighten to 8 ± 0,7 daN.m.

each side ; Tighten the nuts (4), (5) to 5,6 ± 0,5 daN.m.
Tighten the bolts (9) to 32 ± 1,1 daN.m.
Fit the wheels.
Return the vehicle to its wheels.
Tighten the wheel bolts .

REMOVING - REFITTING : FRONT SUBFRAME

ESSENTIAL : Observe the safety and cleanliness recommendations.

1. Recommended tools

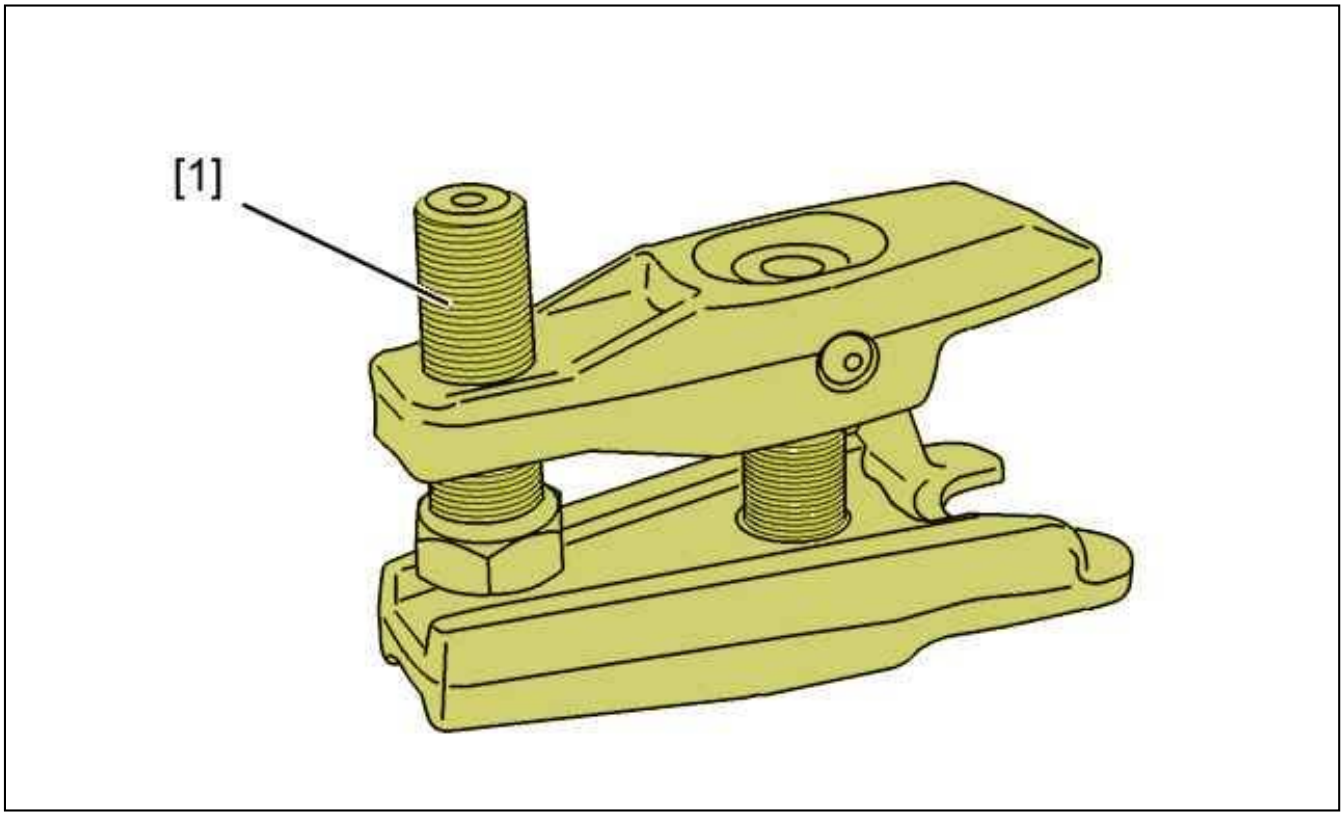

Figure : E5AP2WYD

Reference	Designation	Reference	Reference
[1]	ball-joint extractor	5707-T	(-).0919

2. Removing

Untighten the wheel screws (front).
Lift and support the front of the vehicle.
Remove the front wheels.

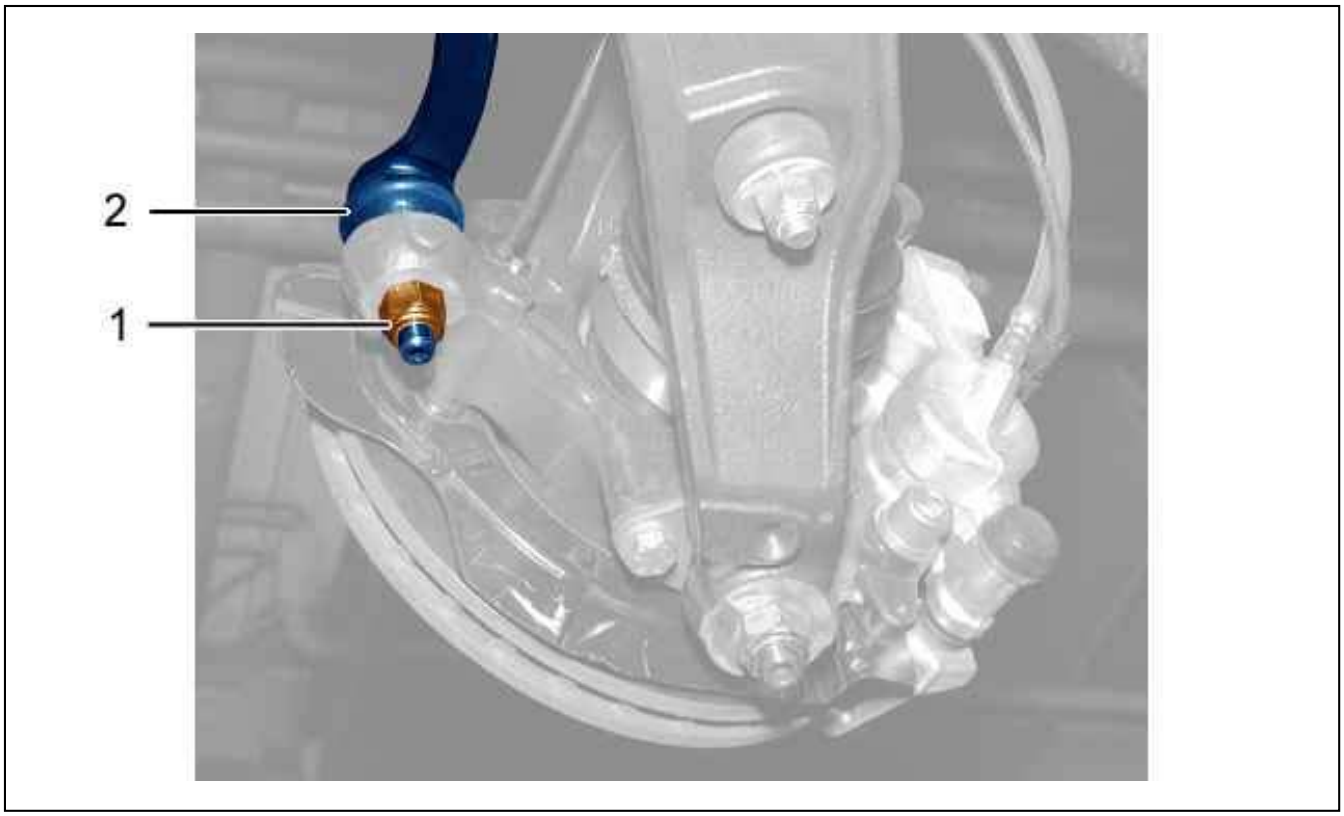

Figure : B3FP7JJD

Remove the nut (1) (on each side).
Uncouple the steering ball-joint (2) ; Using tool [1] (on each side).

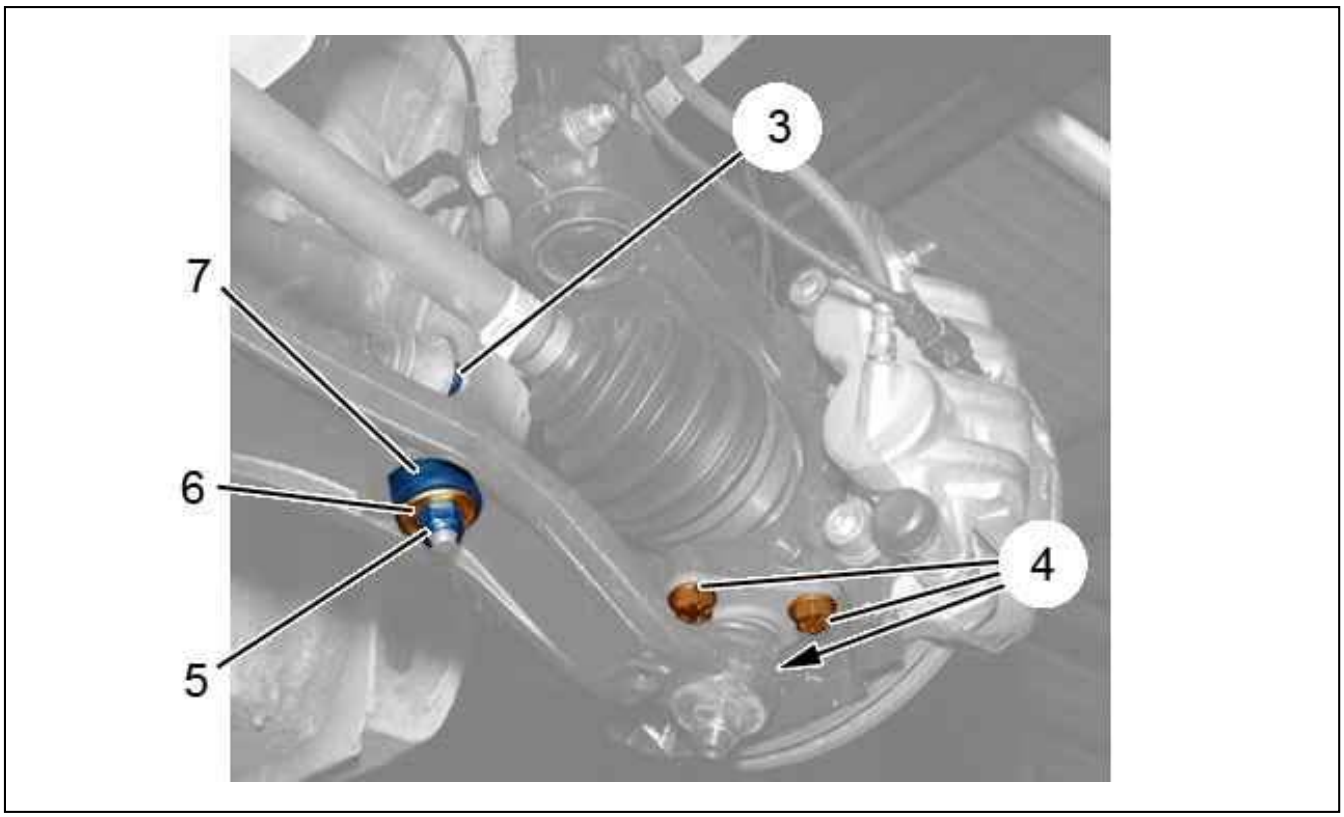

Figure : B3BP1CPD

Unscrew nut (3) (on each side).

Remove (on each side) :

- The nut (5)
- The washer (6)
- The silentblock (7)
- The 3 bolts (4)

Move aside the hub carrier (on each side).

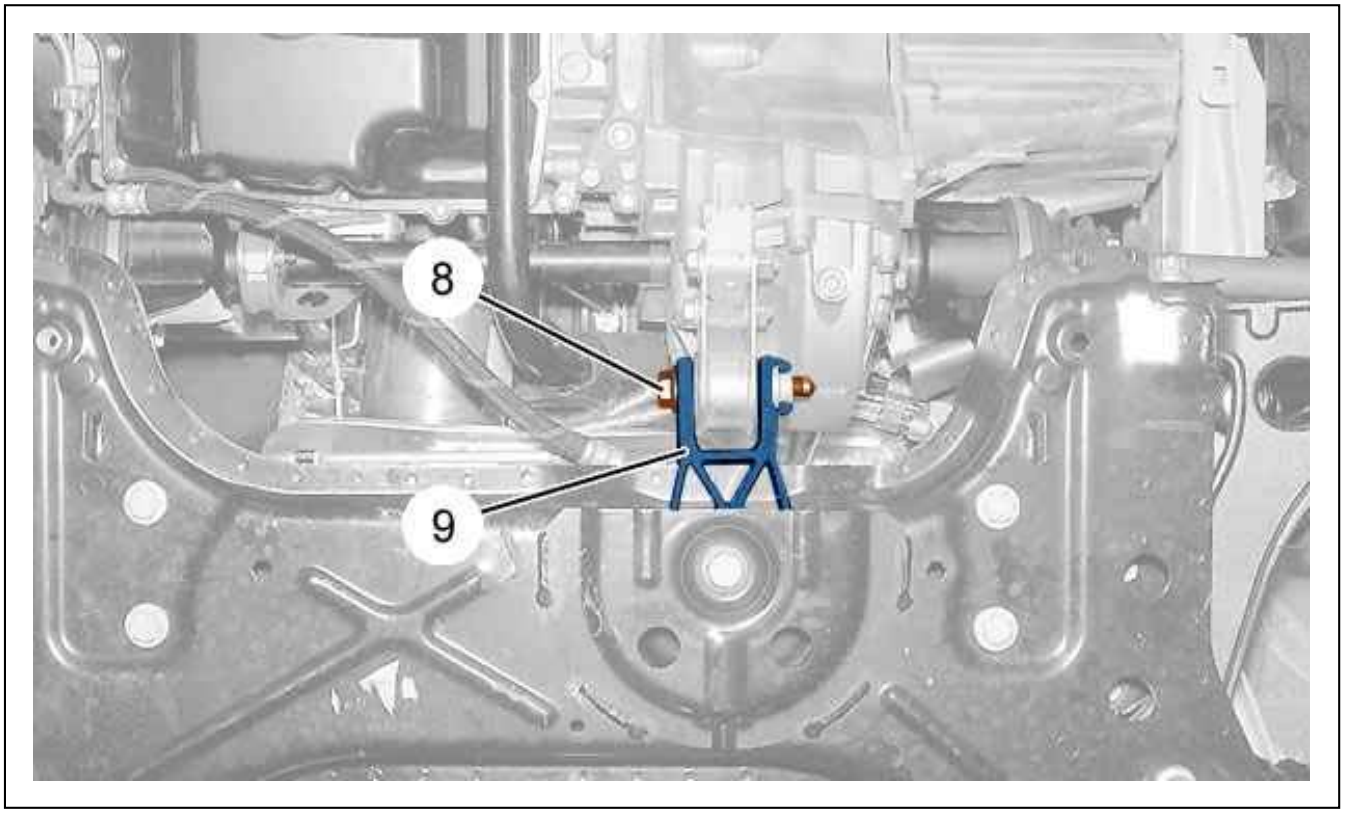

Figure : B3CP0BJD

Remove bolts (8).
Move aside the torque reaction rod (9) from the front subframe.
Position a lifting tool to retain the front sub-frame.

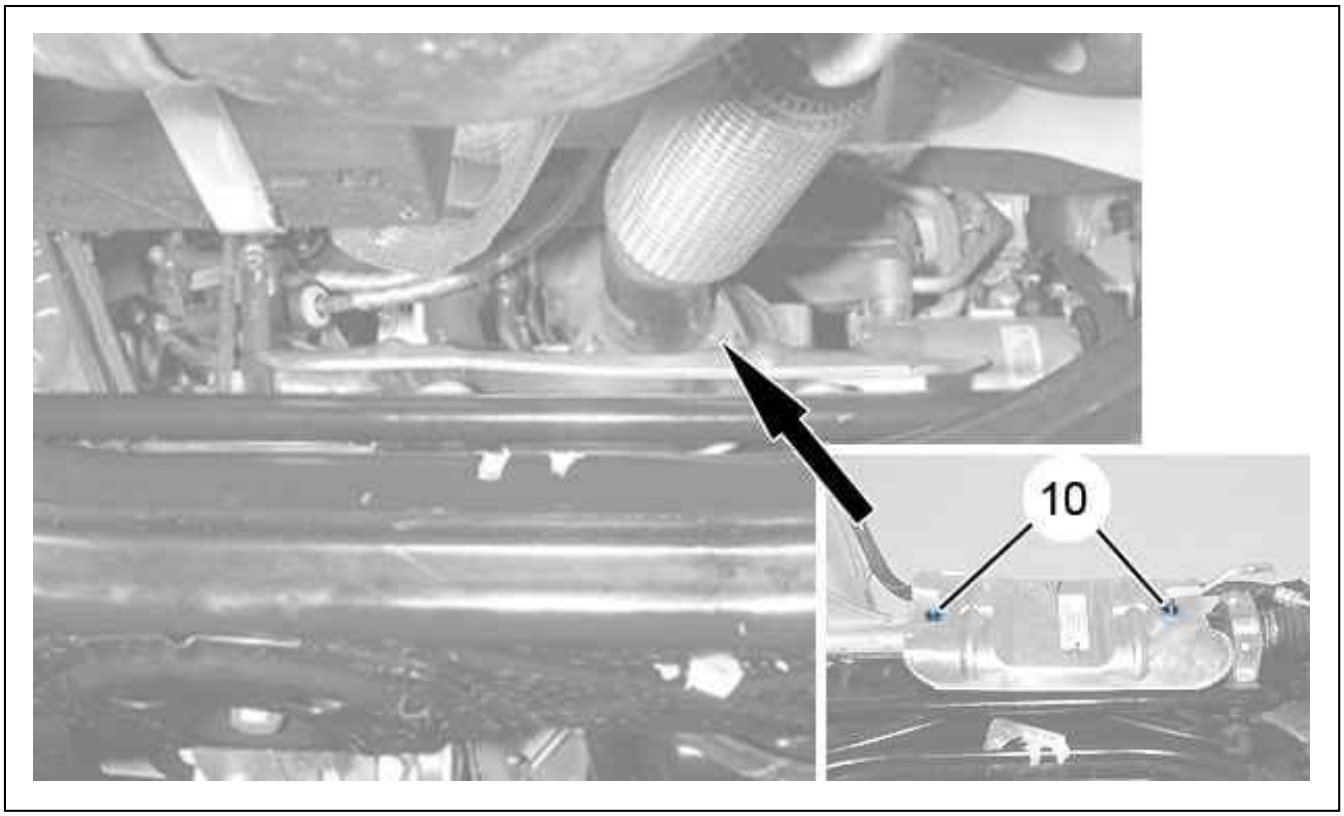

Figure : B3CP0BKD

Remove :

- The nuts (10)
- The steering mechanism thermal protector

Suspend the steering mechanism on the vehicle structure.

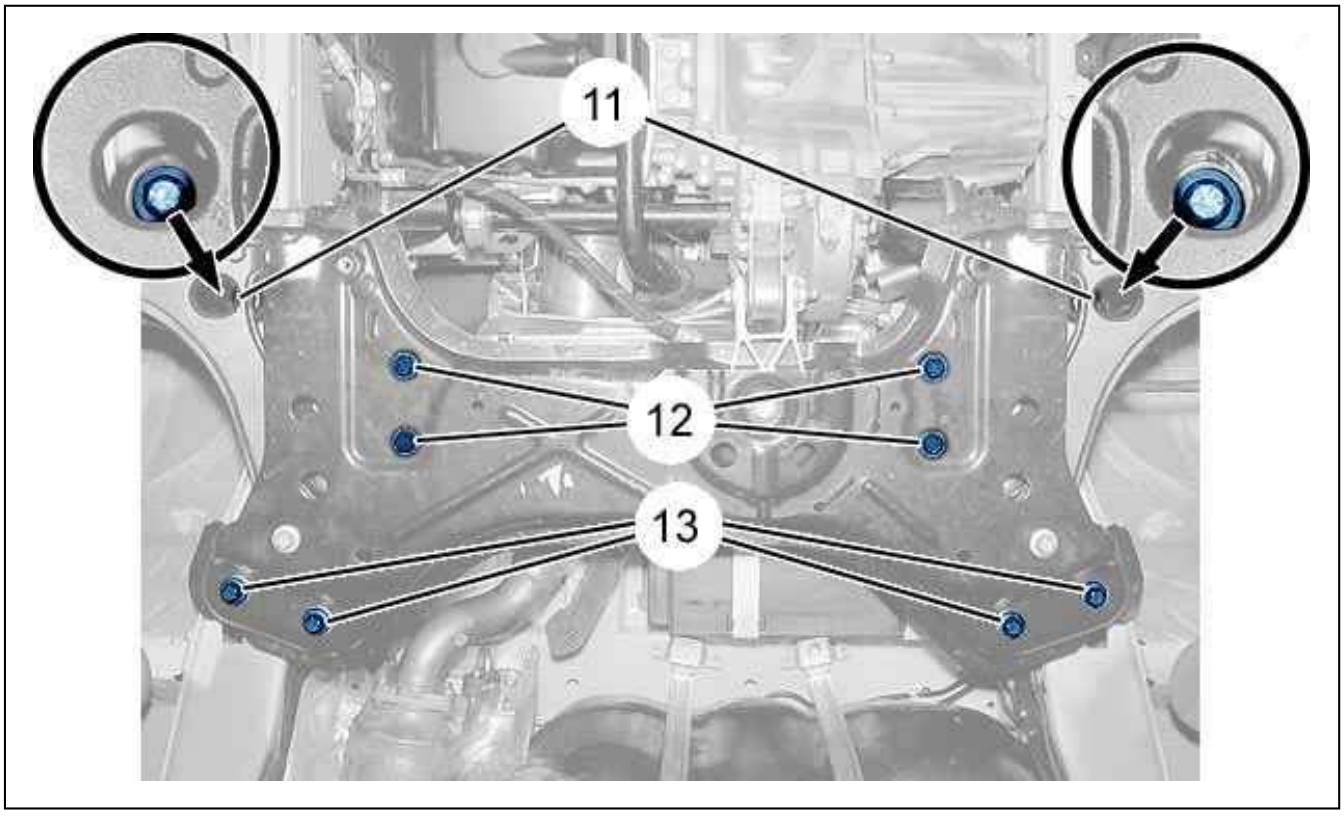

Figure : B3CP0CED

Remove :

- The bolts (11)
- The bolts (13)
- The bolts (12)

Remove the front subframe.

3. Refitting

N.B. : Always fit new Nylstop nuts.

Position the front subframe on the bodyshell.
Refit :

- The bolts (13) ; Tighten to 29 ± 1 daN.m
- The bolts (11) ; Tighten to 29 ± 1 daN.m
- The bolts (12) ; Tighten to 11 ± 1,4 daN.m
- The steering mechanism thermal protector
- The bolts (10) ; Tighten to 0,6 ± 0,17 daN.m

Engage the torque reaction rod (9) on the front subframe.
Refit bolt (8) ; Tighten to 13,5 ± 0,4 daN.m.
Position the hub carrier ball joint (on each side).
Refit (on each side) :

- The 3 bolts (4) ; Tighten to 11,5 ± 0,4 daN.m
- The silentblock (7)
- The washer (6)
- The nut (5)

Couple up the steering ball-joint (2) (on each side).
Refit the nut (1) ; Tighten to 8 ± 0,7 daN.m (on each side).
Fit the wheels.
Return the vehicle to its wheels.
Tighten (on each side) :

- The nut (3) to 5,6 ± 0,5 daN.m
- The nut (5) to 5,6 ± 0,5 daN.m

Tighten the wheel bolts .

REMOVING - REFITTING : FRONT PIVOT

1. Recommended tools

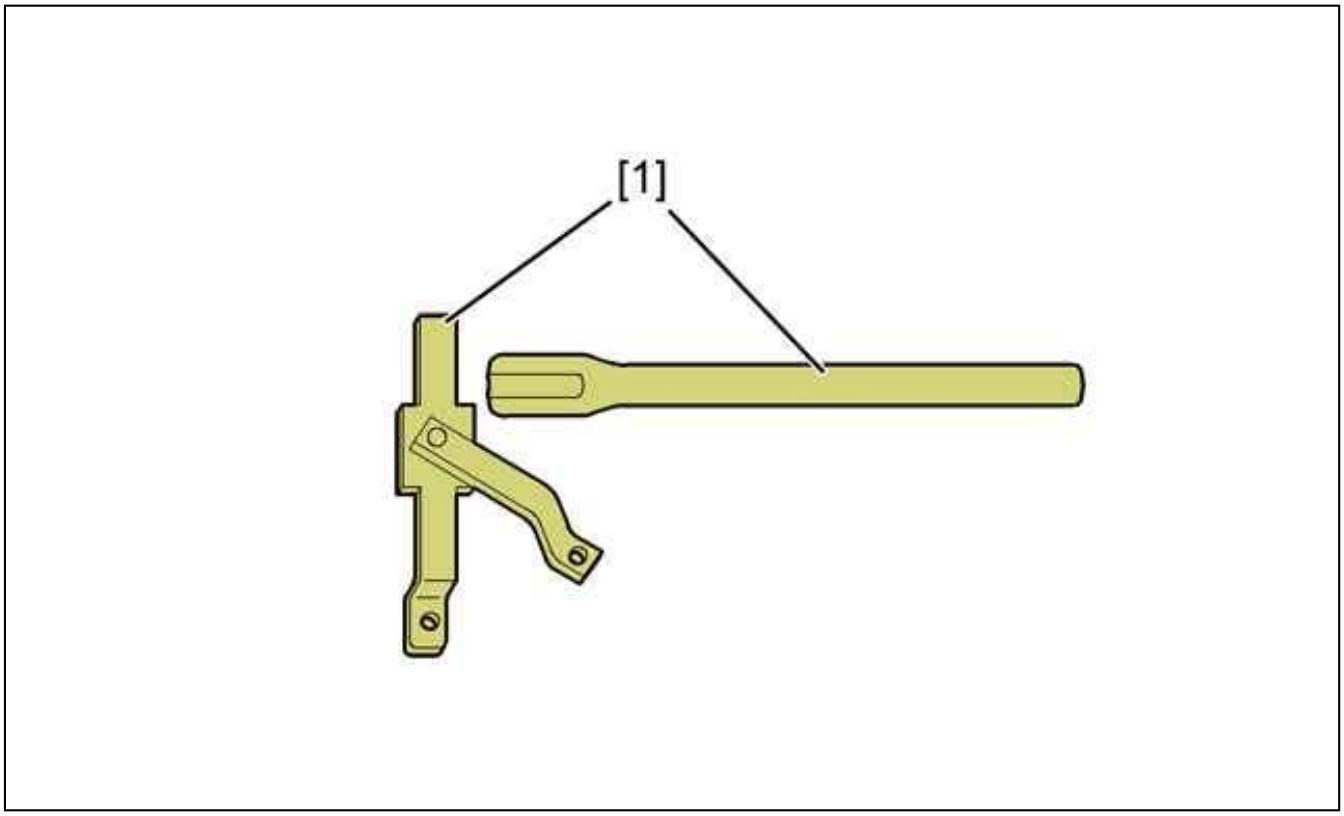

Figure : E5AP2Y3D

Reference	Designation	Reference	Reference
[1]	hub immobilising tool	6310-T	(-).0606AY

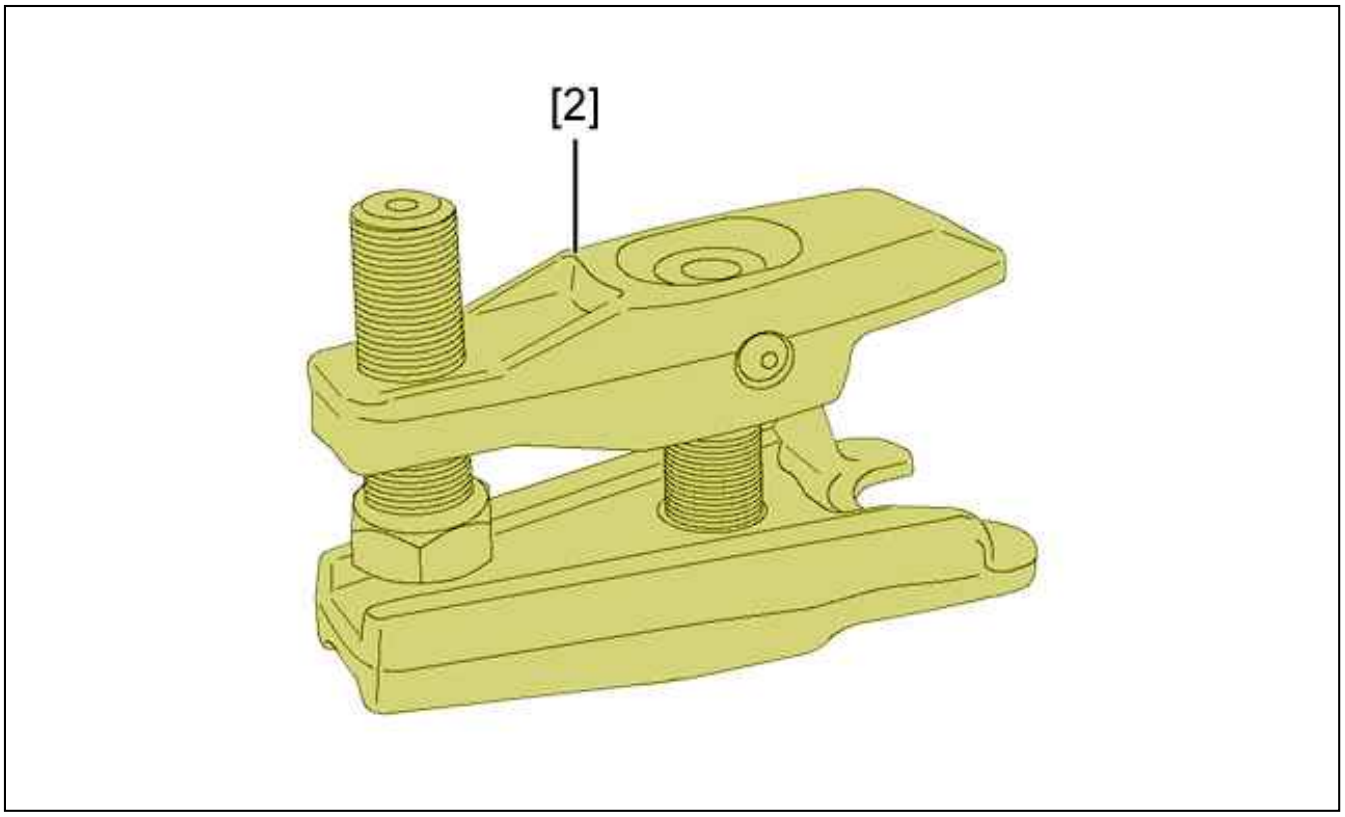

Figure : E5AP2Y4D

Reference	Designation	Reference	Reference
[2]	ball-joint extractor	5707-T	(-).0919

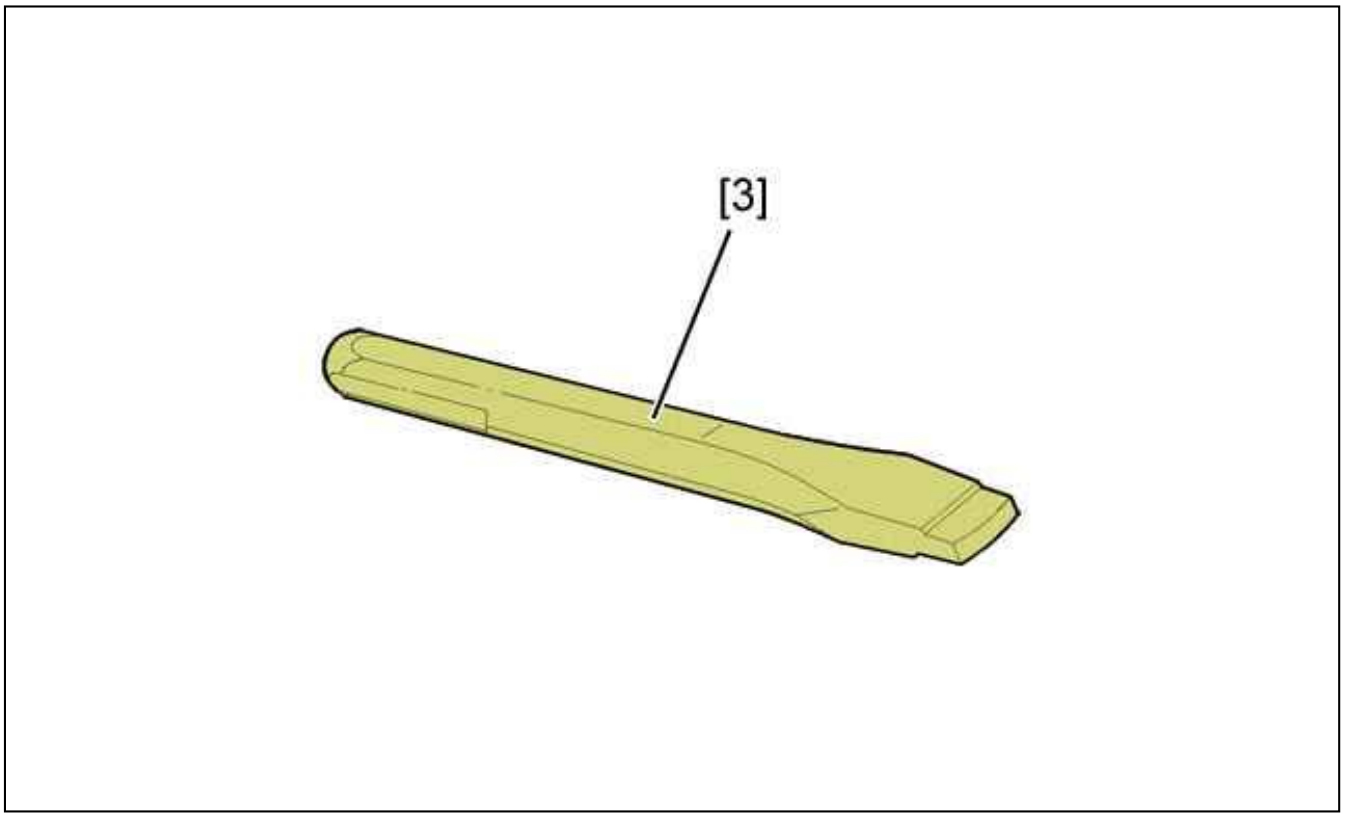

Figure : E5AP2Y5D

Reference	Designation	Reference	Reference
[3]	locking punch	5709-T.E	(-).0619 E

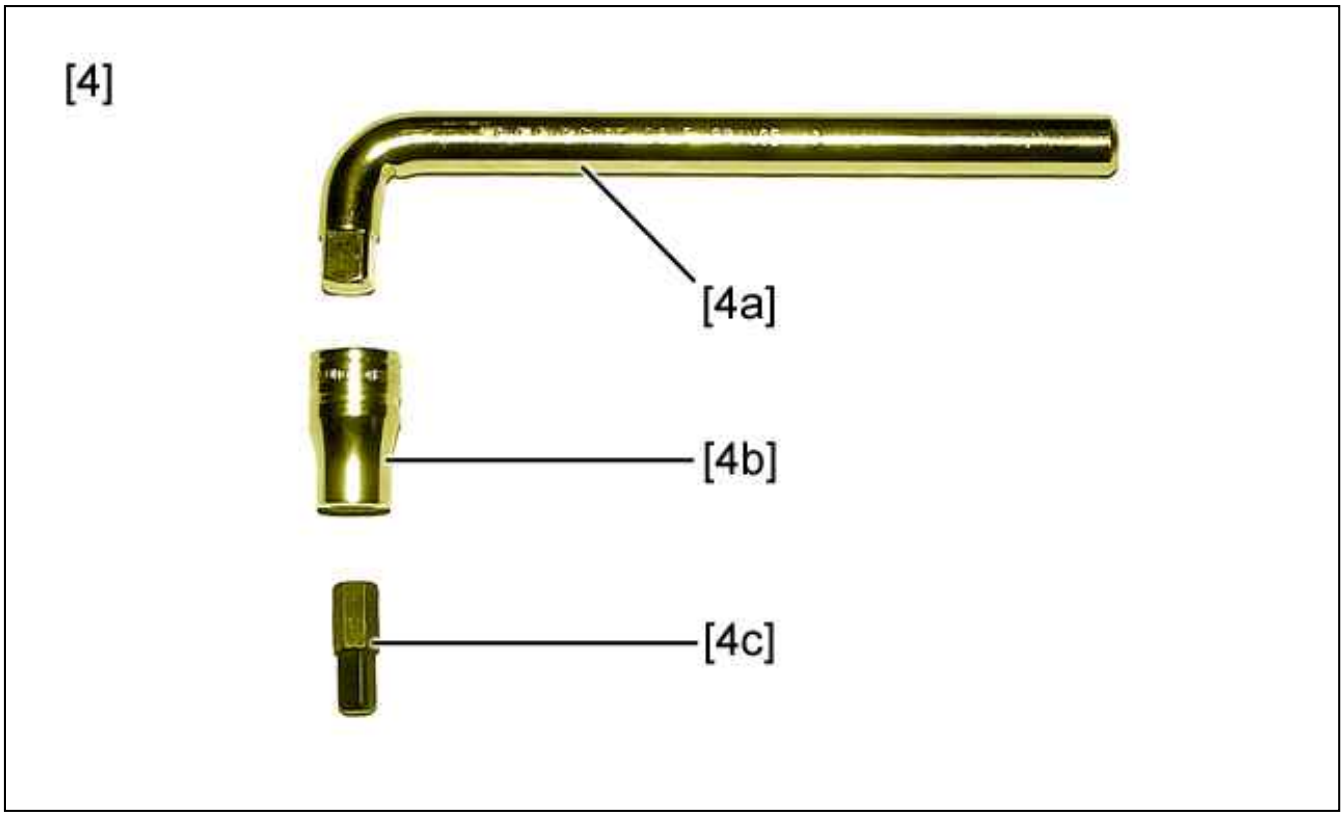

Figure : E5AP30VD

Reference	Designation
[4]	[/] pivot spreading tool Facom DS (From toolkit DS.J5)
[4a]	Spanner DS.P
[4b]	socket J.236
[4c]	adaptor DS.11A

ESSENTIAL : Observe the safety and cleanliness recommendations.

2. Removing

Untighten the wheel screws (front).
Lift and support the vehicle with front wheels suspended.
Remove the front wheels.

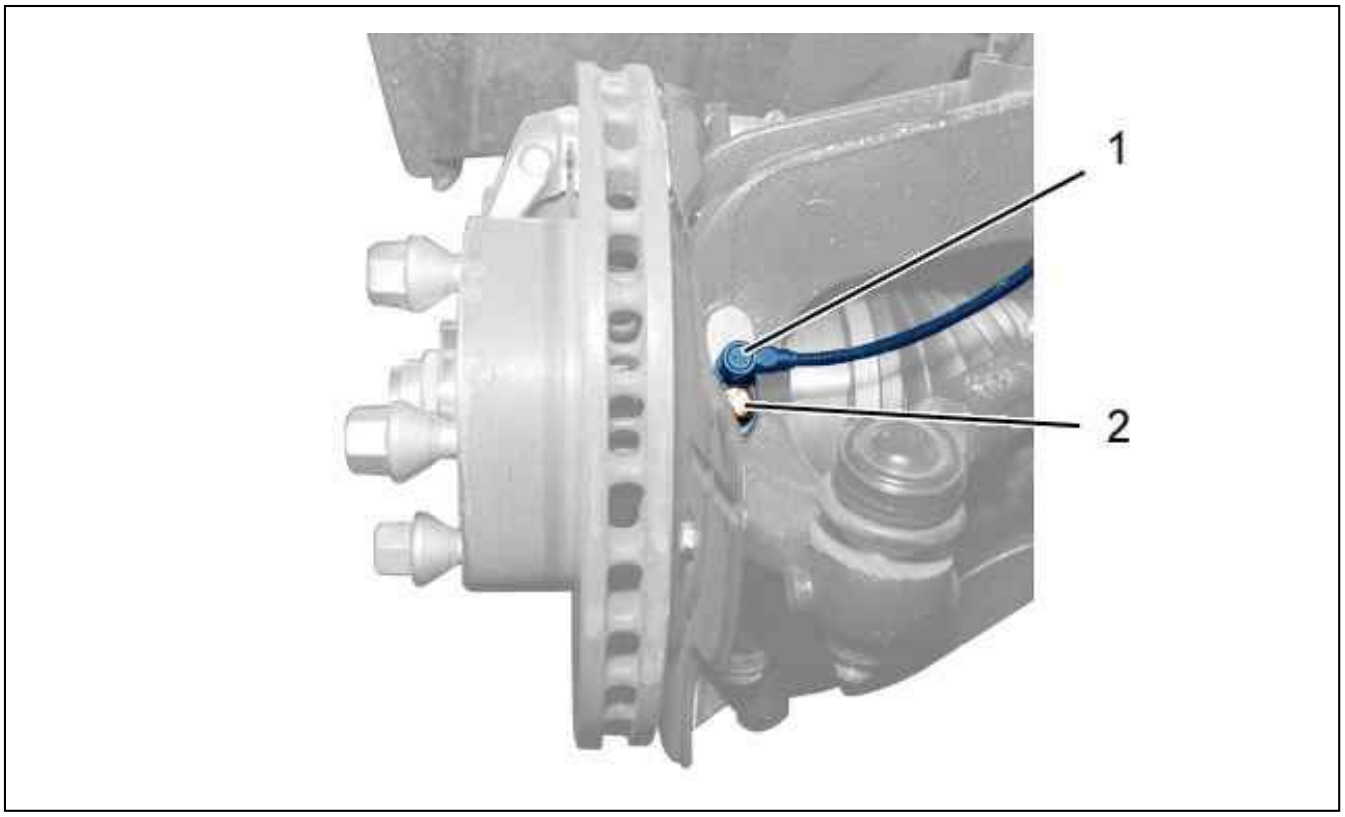

Figure : B3FP7KJD

Remove bolts (2).
Disengage the wheel speed sensor (1).
Suspend the wheel speed sensor (1).
Remove the brake pads (see the relevant operation).

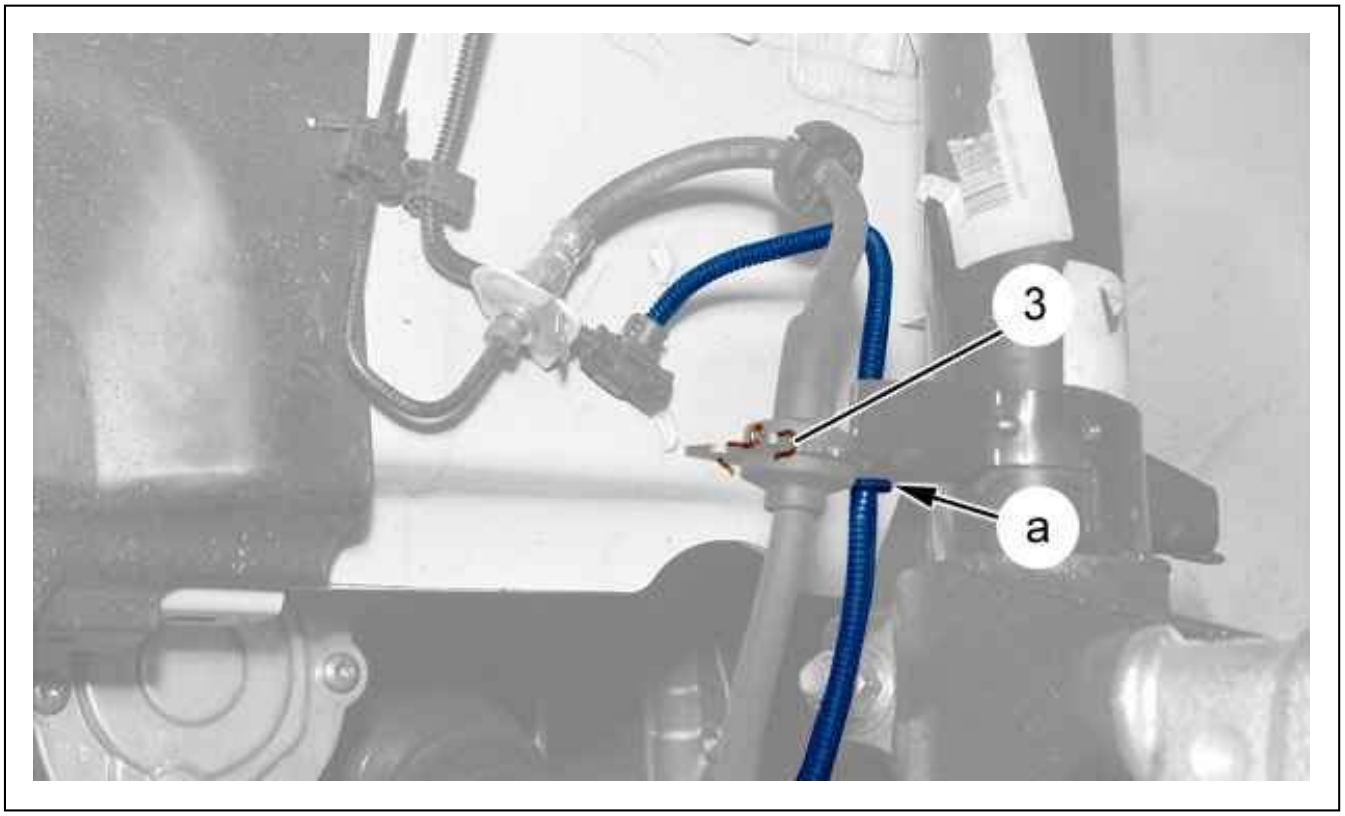

Figure : B3FP7MAD

Remove the fastener (3) and disengage the flexible union .
Liberate the wiring harness (at "a").

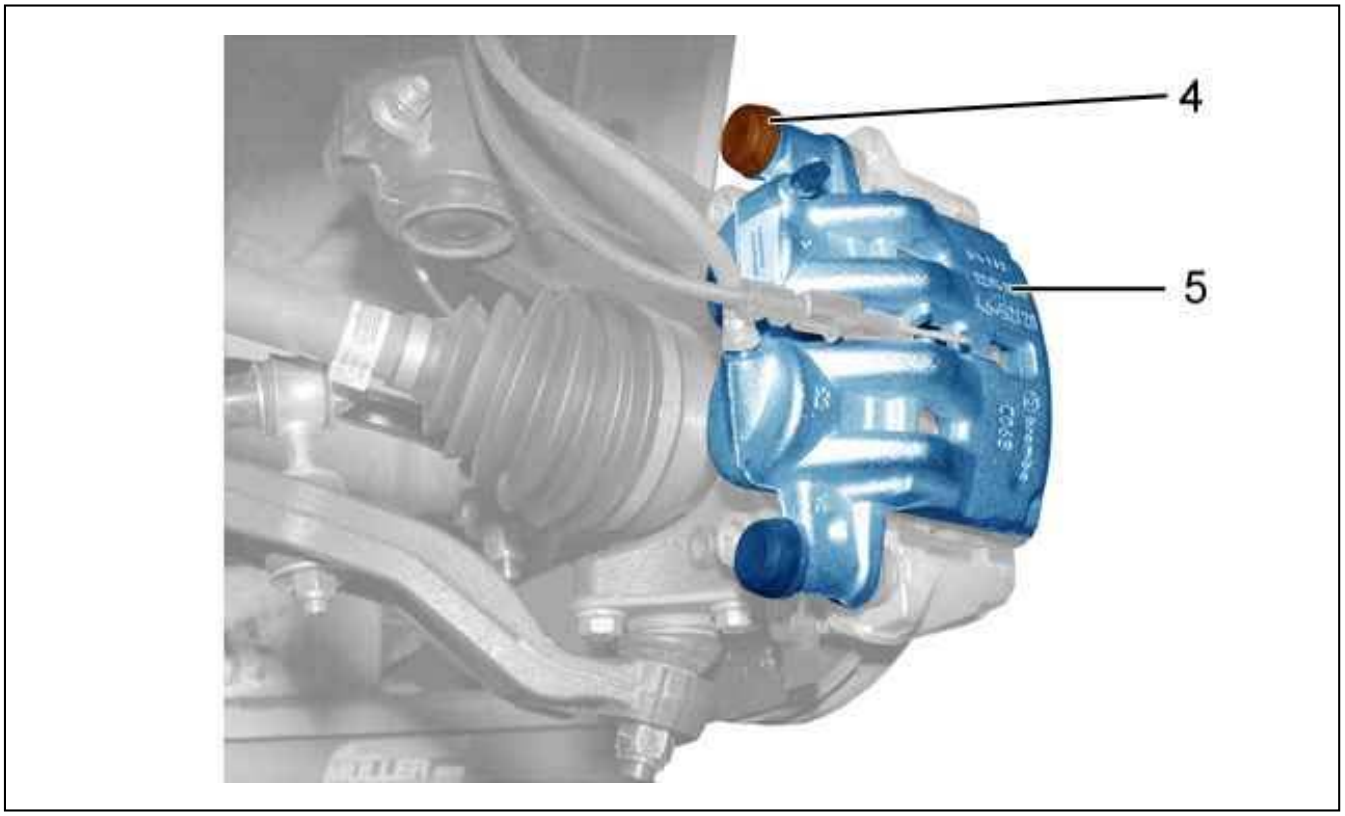

Figure : B3FP7MBD

Remove bolts (4).
Disengage the brake caliper (5).
Leave the caliper hanging (5).
Unlock the transmission nut .

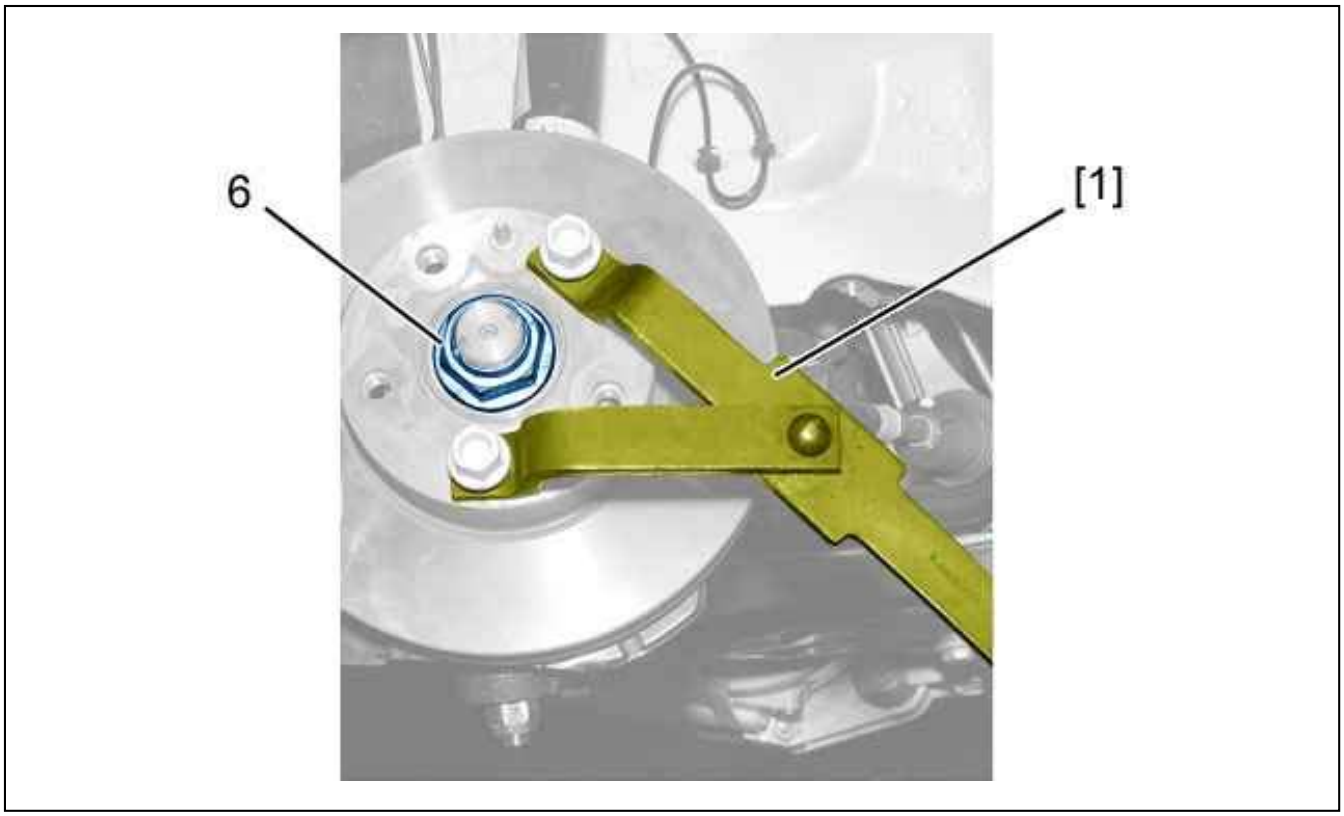

Figure : B3FP7MCD

Immobilise the hub from rotation using tool [1].
Remove :

- The drive shaft nut (6)
- The tool [1]

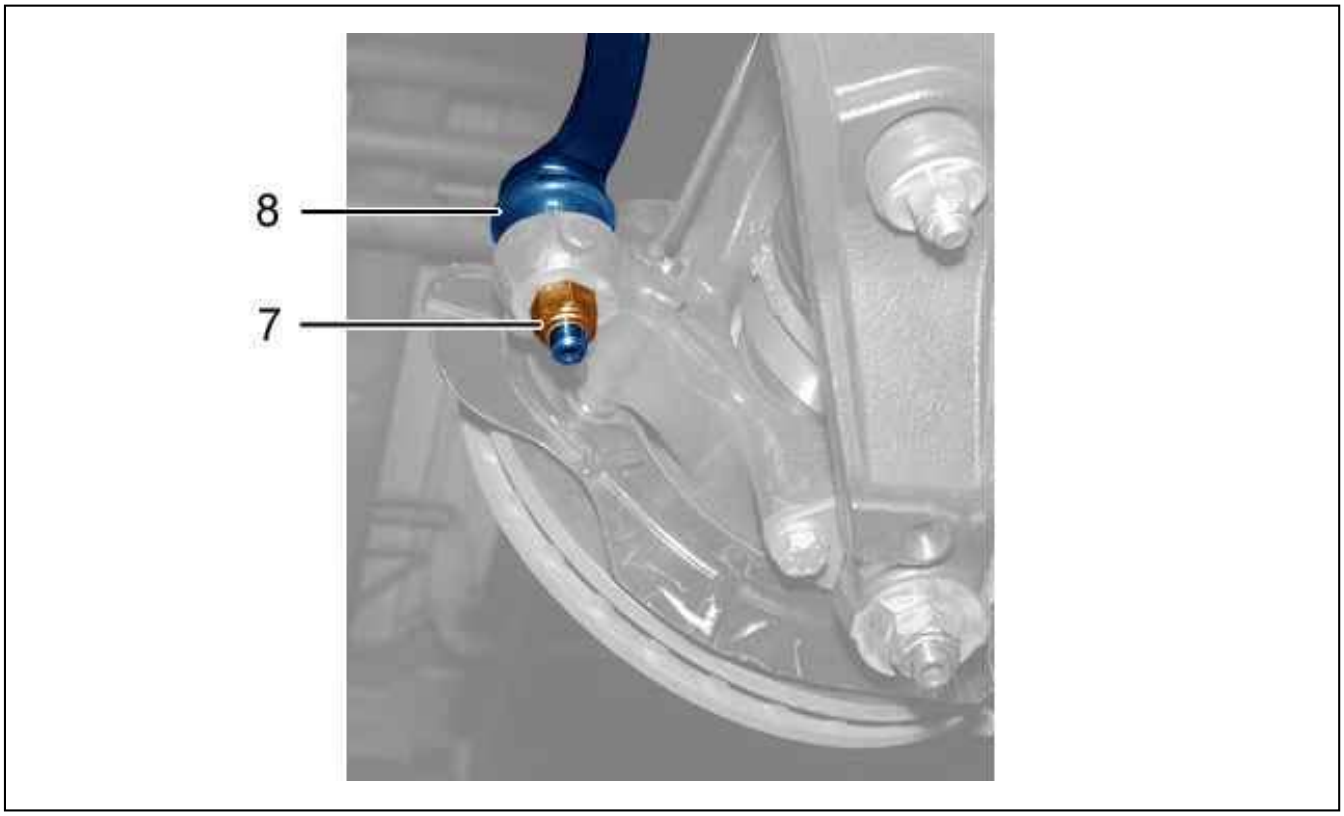

Figure : B3FP7MDD

Remove the nut (7).
Uncouple the steering ball-joint (8) ; Using tool [2].

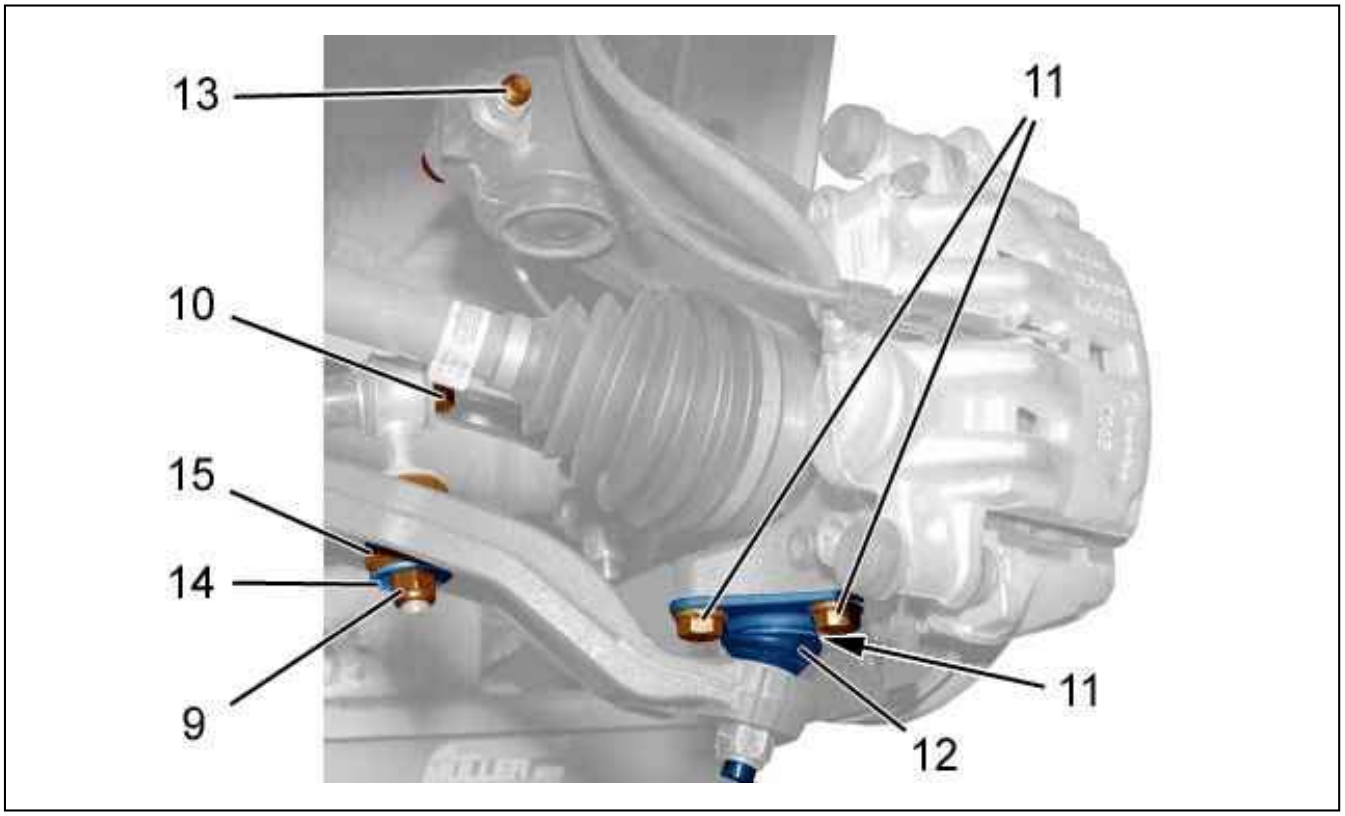

Figure : B3FP7MED

Remove :

- The nut (9)
- The washer (14)
- The silentblock (15)

Unscrew nut (10).
Remove the 3 bolts (11).
Disengage the ball-joint housing (12).
Remove bolts (13).

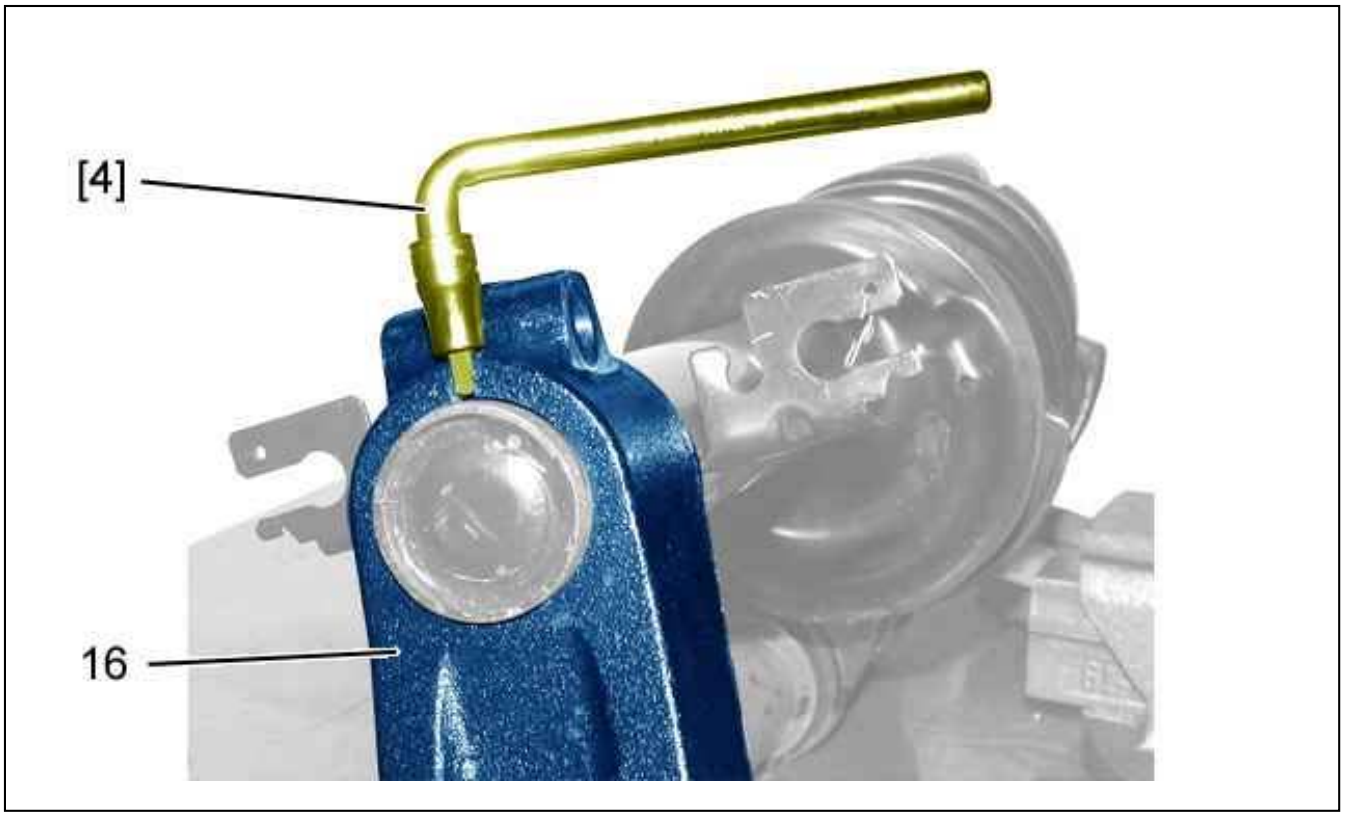

Figure : B3FP7MFD

Position the tool [4] in the front pivot opening .
Turn a quarter turn to open the pivot.
Uncouple the front pivot (16).
Remove the front pivot (16).
Remove the tool [4].

3. Refitting

Position the tool [[4]] in the front pivot opening .
Turn a quarter turn to open the pivot.
Engage the front pivot (16) on the suspension leg .
Refit bolt (13).
Remove the tool [4].
Tighten the bolt (13) to 12 ± 0,4 daN.m.
Position the ball-joint housing (12).
Refit the bolts (11).
Tighten the bolts (11) to 11,5 ± 0,4 daN.m.
Refit :

- The silentblock (15)
- The washer (14)
- The nut (9)

Couple up the steering ball-joint (8).
Refit the nut (7).
Tighten the nut (7) to 8 ± 0,7 daN.m.
Refit the driveshaft nut (6).
Immobilise the hub from rotation using tool [1].
Tighten the driveshaft nut : 47,5 ± 4,75 daNm.
Remove the tool [1].

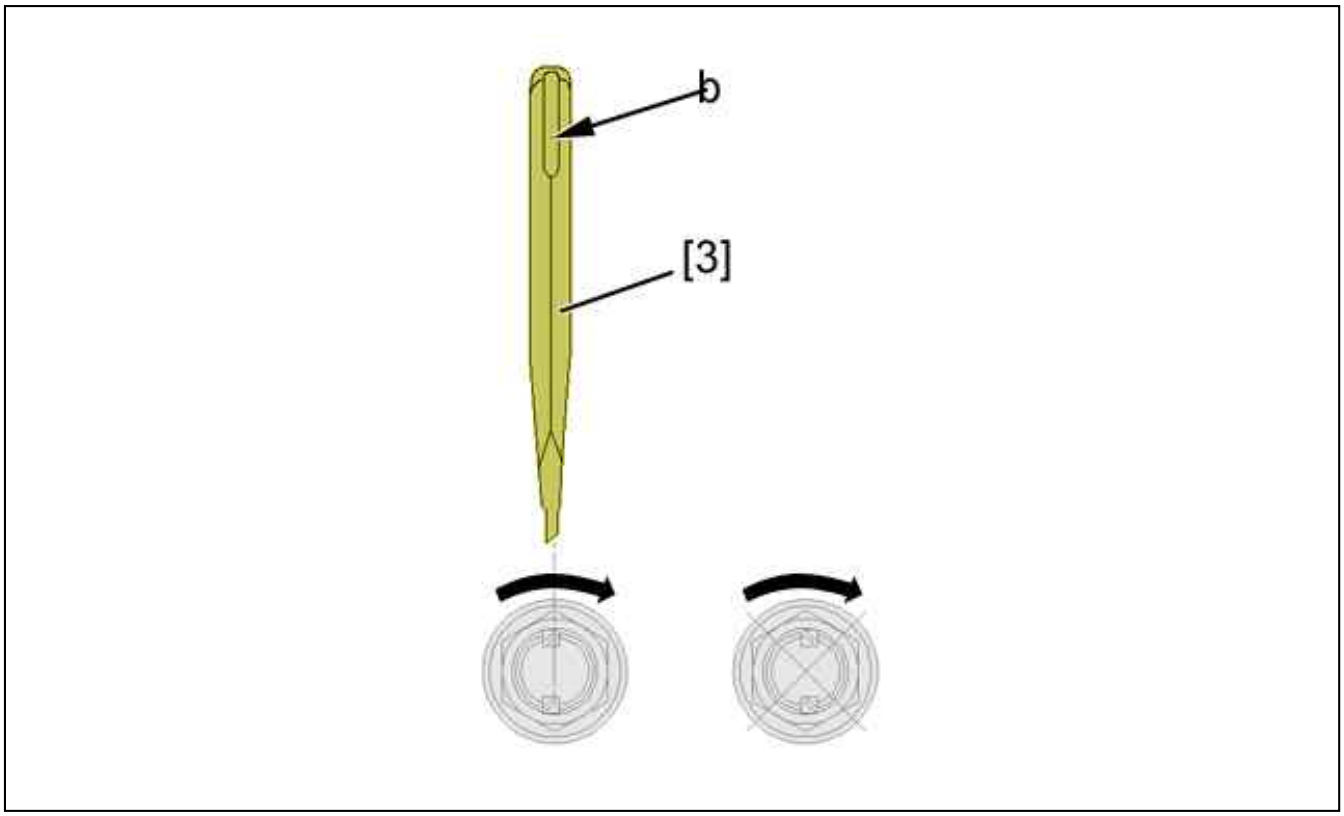

Figure : B2FP06MD

Lock each drive shaft nut with the help of tool [3].
The flat part "b" of the tool should always face outwards.

CAUTION : The nut collar must be locked in the opposite direction to tightening.

Refit :

- The brake caliper (5)
- The new bolt (4) (Pre-coated with a thread-locking product)

Tighten the bolt (4) to 3,4 ± 0,2 daN.m.
Reposition :

- The harness (at "a")
- The brake hose
- The clip (3)

Fit the brake pads (see the relevant operation).
Refit the wheel speed sensor (1) (see the relevant operation).
Tighten the bolt (2) to 0,8 ± 0,3 daN.m.
Reposition the harness of the wheel speed sensor .
Fit the wheels.
Return the vehicle to its wheels.
Tighten the nuts (9) and (10) to 5,6 ± 0,5 m.daN.
Tighten the wheel bolts .

REMOVING - REFITTING : FRONT HUB CARRIER BALL-JOINT

1. Recommended tools

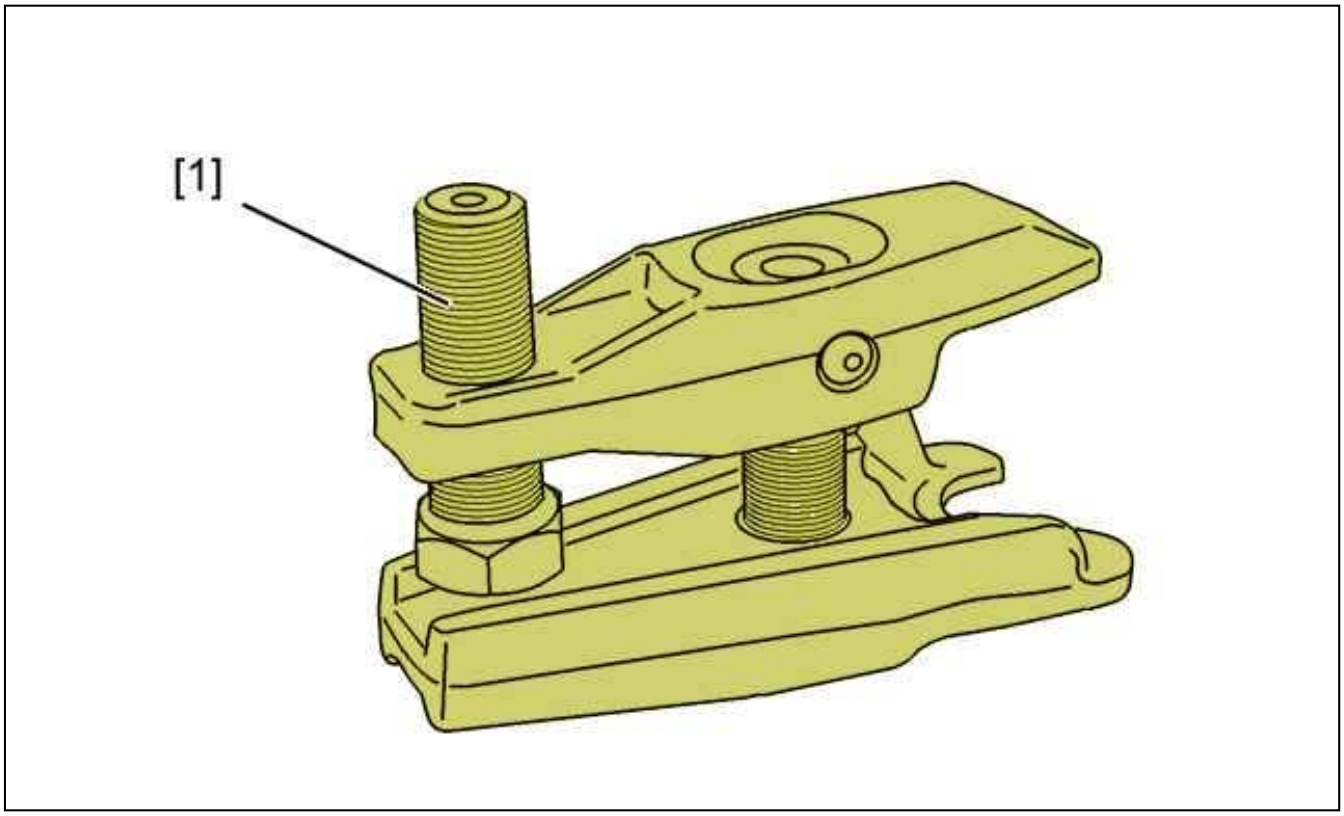

Figure : E5AP2WYD

Reference	Designation	Reference	Reference
[1]	ball-joint extractor	5707-T	(-).0919

2. Removing

Untighten the wheel screws (front).
Lift and support the vehicle with front wheels suspended.
Remove the front wheels.

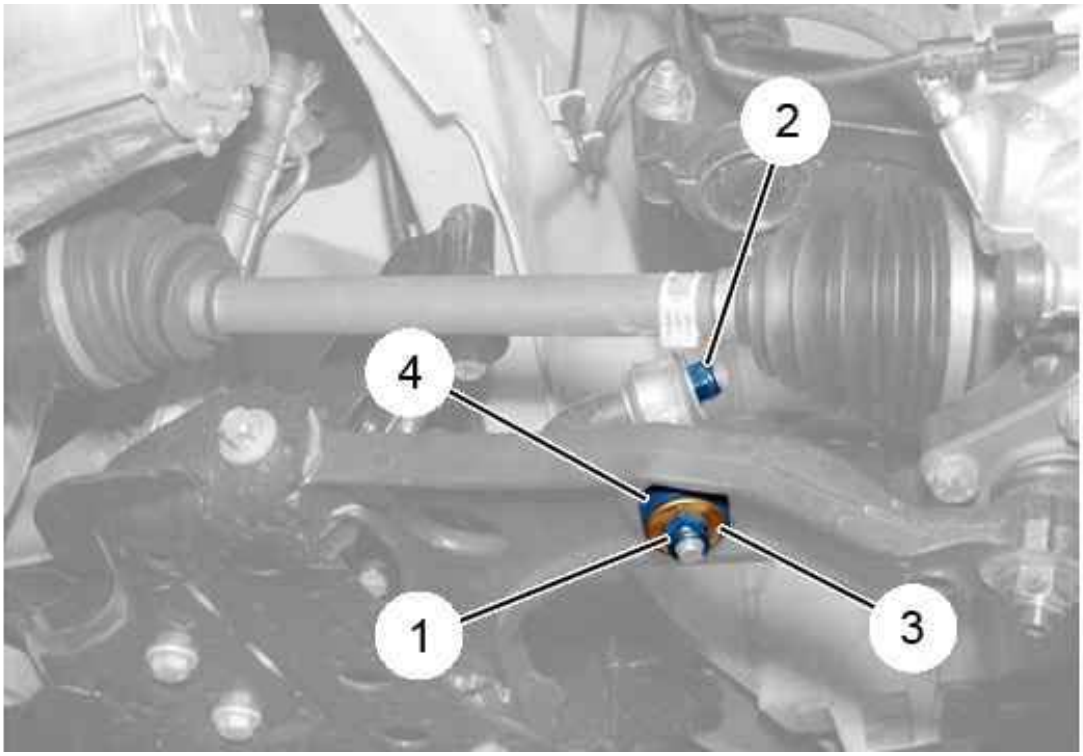

Figure : B3CP0BLD

Remove :

- The nut (1)
- The washer (3)
- The silentblock (4)

Unscrew nut (2).

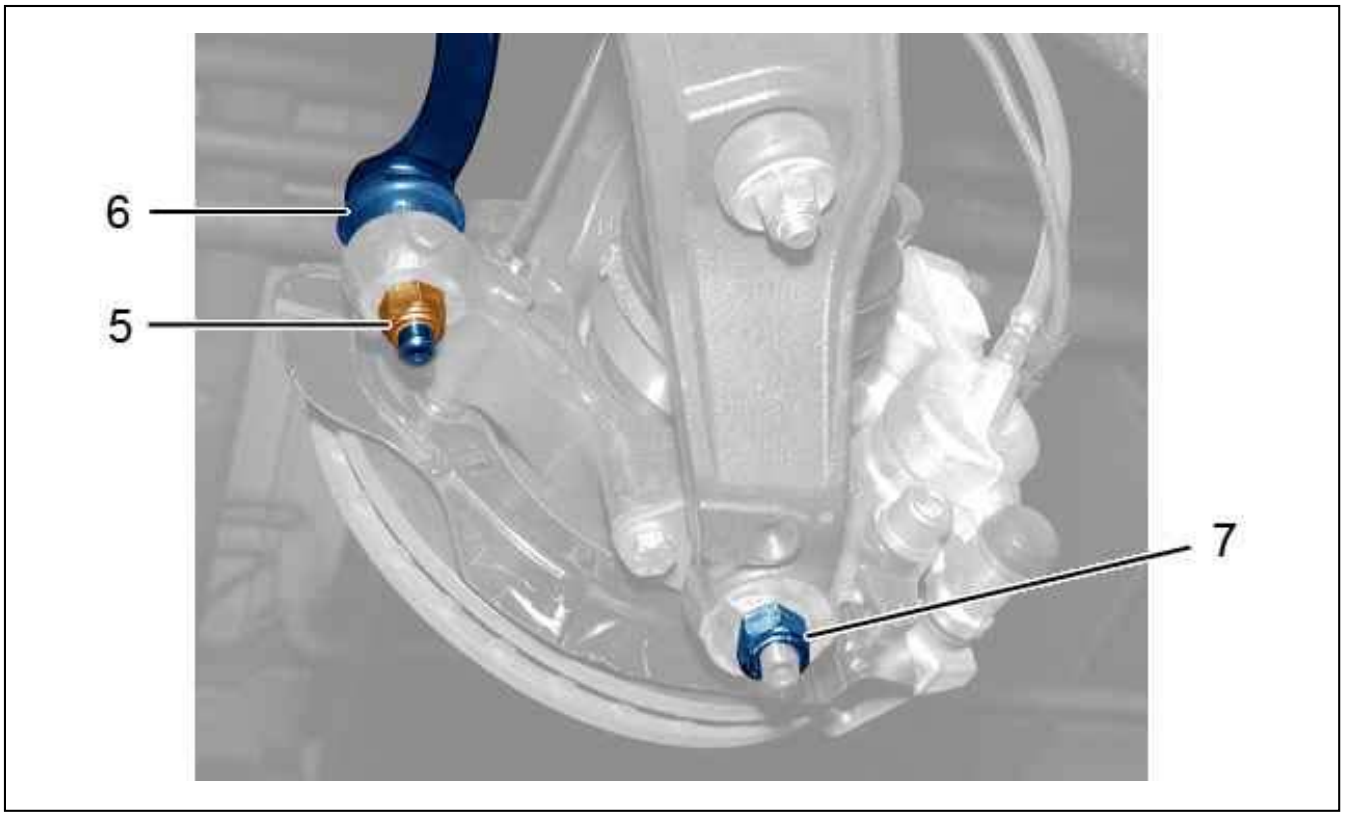

Figure : B3FP7L0D

Remove the nut (5).
Uncouple the steering ball-joint (6) ; Using tool [1].
Remove the nut (7).

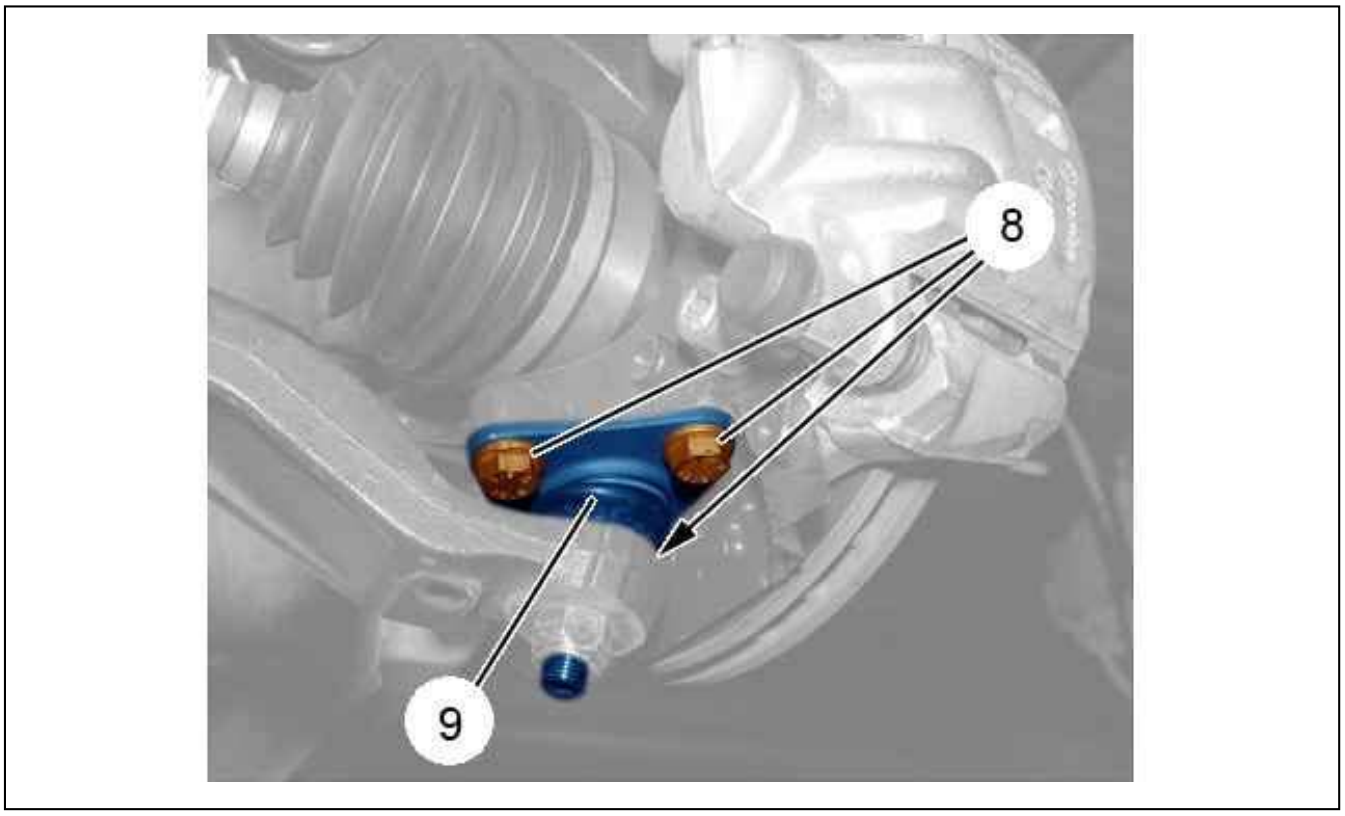

Figure : B3FP7L1D

Slacken the 3 screws (8) of the ball-pin casing.
Uncouple the front pivot ball-joint (9) ; Using tool [1].
Remove the bolts (8).
Move aside the front pivot .
Remove the front hub carrier ball-joint (9).

3. Refitting

ESSENTIAL : Always fit new Nylstop nuts.

Refit the front pivot ball-joint (9) on the arm .
Position the front pivot .
Fit the bolts (8).
Tighten :

- The 3 bolts (8) to 11,5 ± 0,4 daN.m
- The nut (7) to 15 ± 0,5 daN.m

Couple up the steering ball-joint (6).
Refit the nut (5) ; Tighten to 8 ± 0,7 daN.m.
Refit :

- The silentblock (4)
- The washer (3)
- The nut (1)

Fit the wheels.
Return the vehicle to its wheels.
Tighten the nuts (1) and (2) to 5,6 ± 0,5 m.daN.
Tighten the wheel bolts .

OVERHAUL : PIVOT

ESSENTIAL : Observe the safety and cleanliness recommendations.

1. Recommended tools

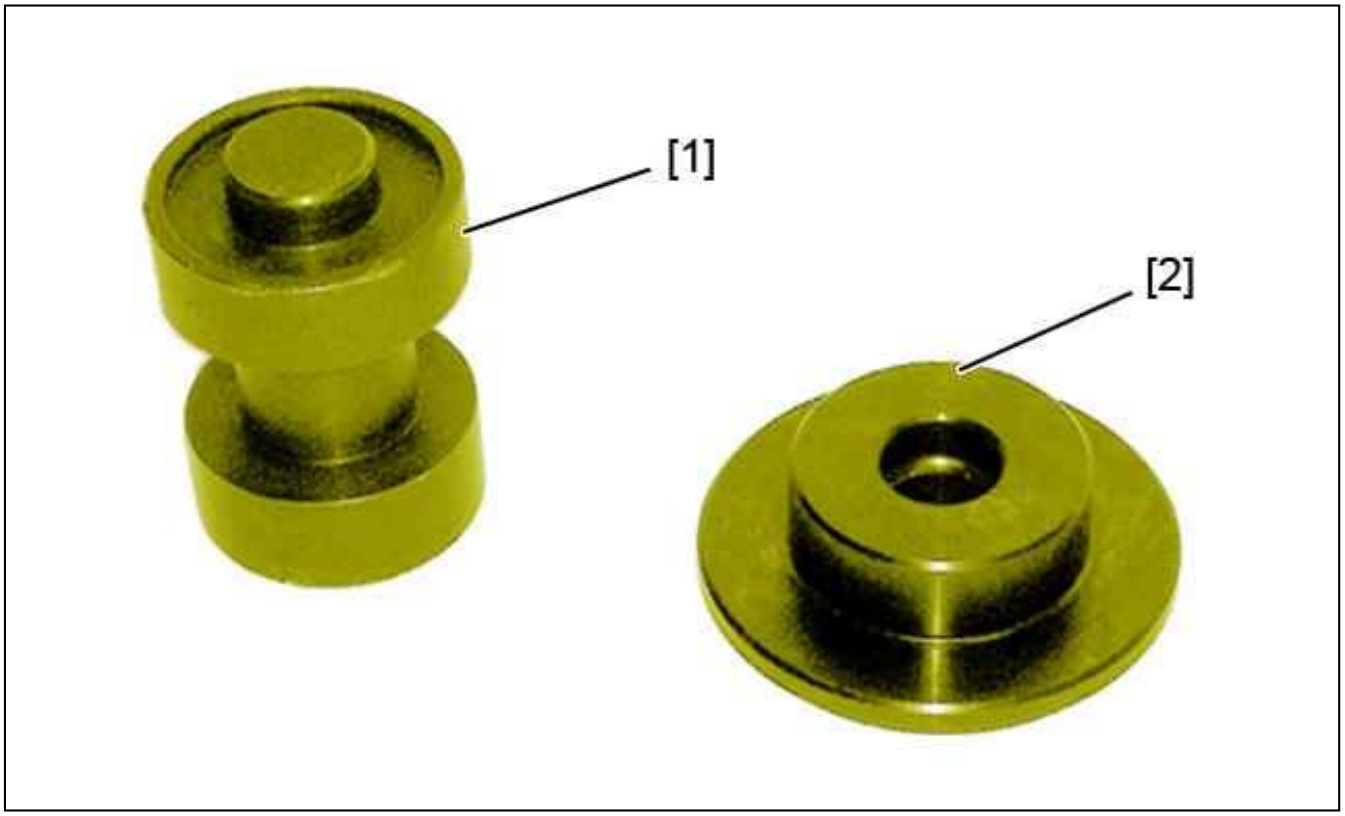

Figure : E5AP3K8D

Reference	Designation	Reference	Reference
[1]	bearing removal tool	9501-T.E4	(-).0526-X
[2]	bearing removal tool	5709-T.L1	(-).0619-L1

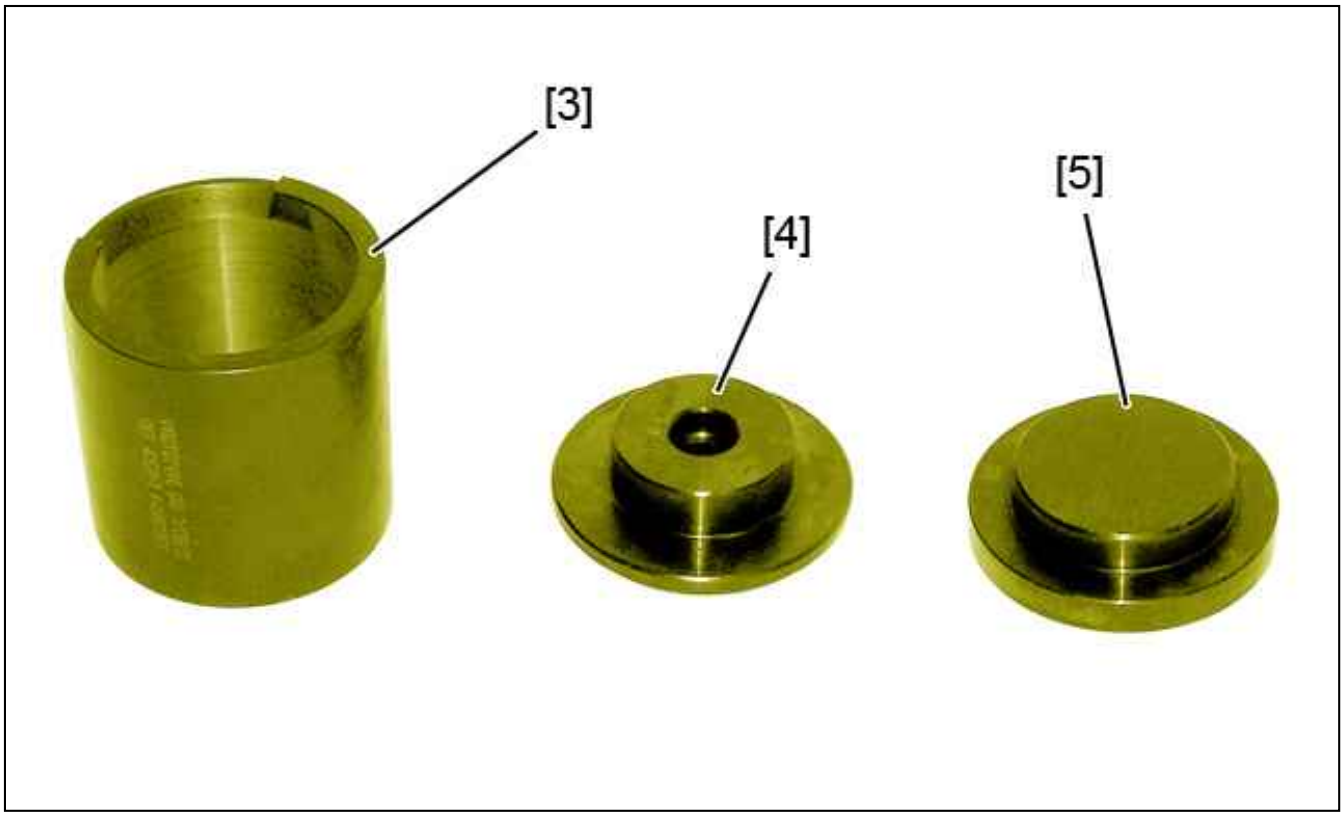

Figure : E5AP3K9D

Reference	Designation	Reference	Reference
[3]	Housing	4702-T.CZ	(-).0551-CZ
[4]	bearing refitting/fitting tool	5709-T.P2	(-).0619-P2
[5]	bearing fitting tool	5709-T.L2	(-).0619-L2

2. Removing

Remove :

- The swivel (see the relevant operation)
- The brake disc (see the relevant operation)

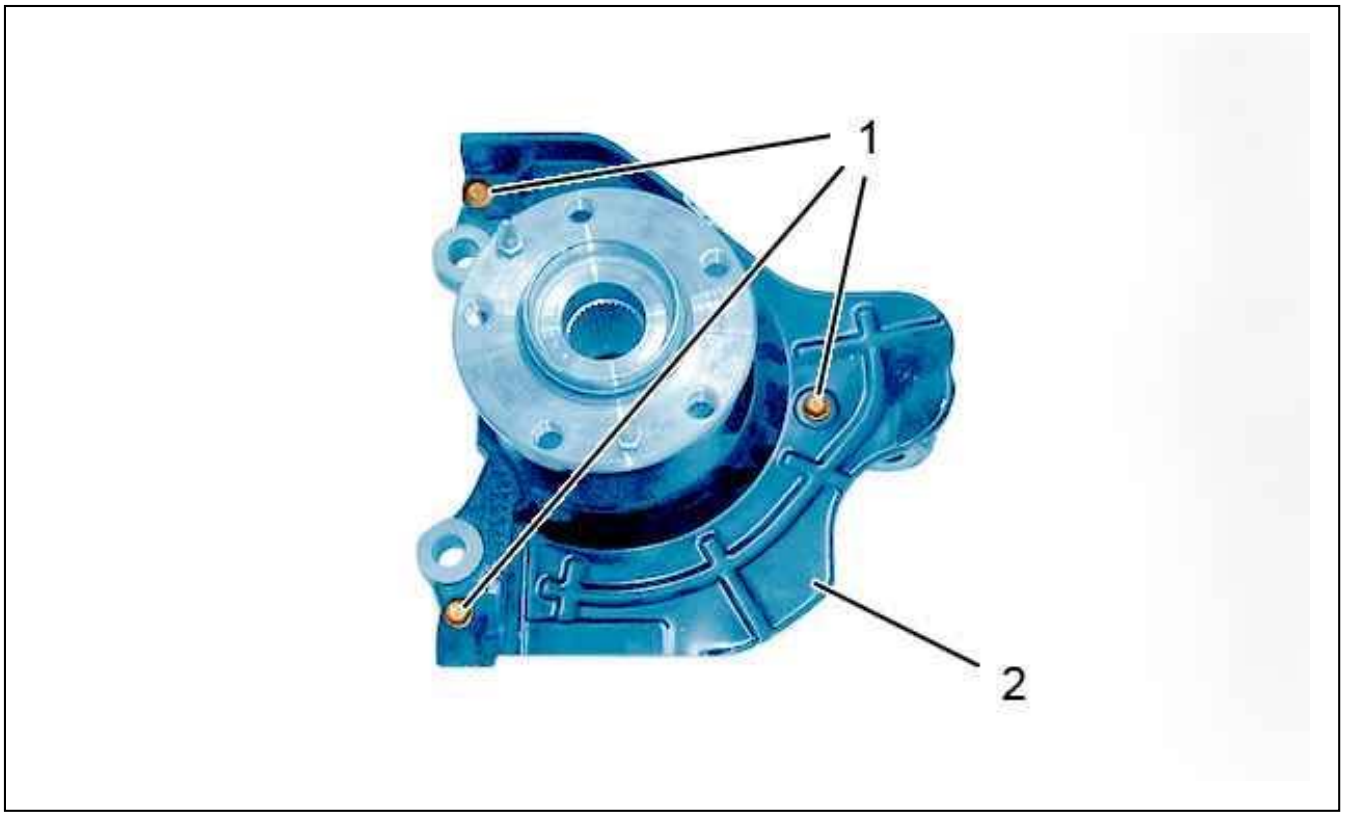

Figure : B3CP0EMD

Remove :

- The bolts (1)
- The heat shield (2)

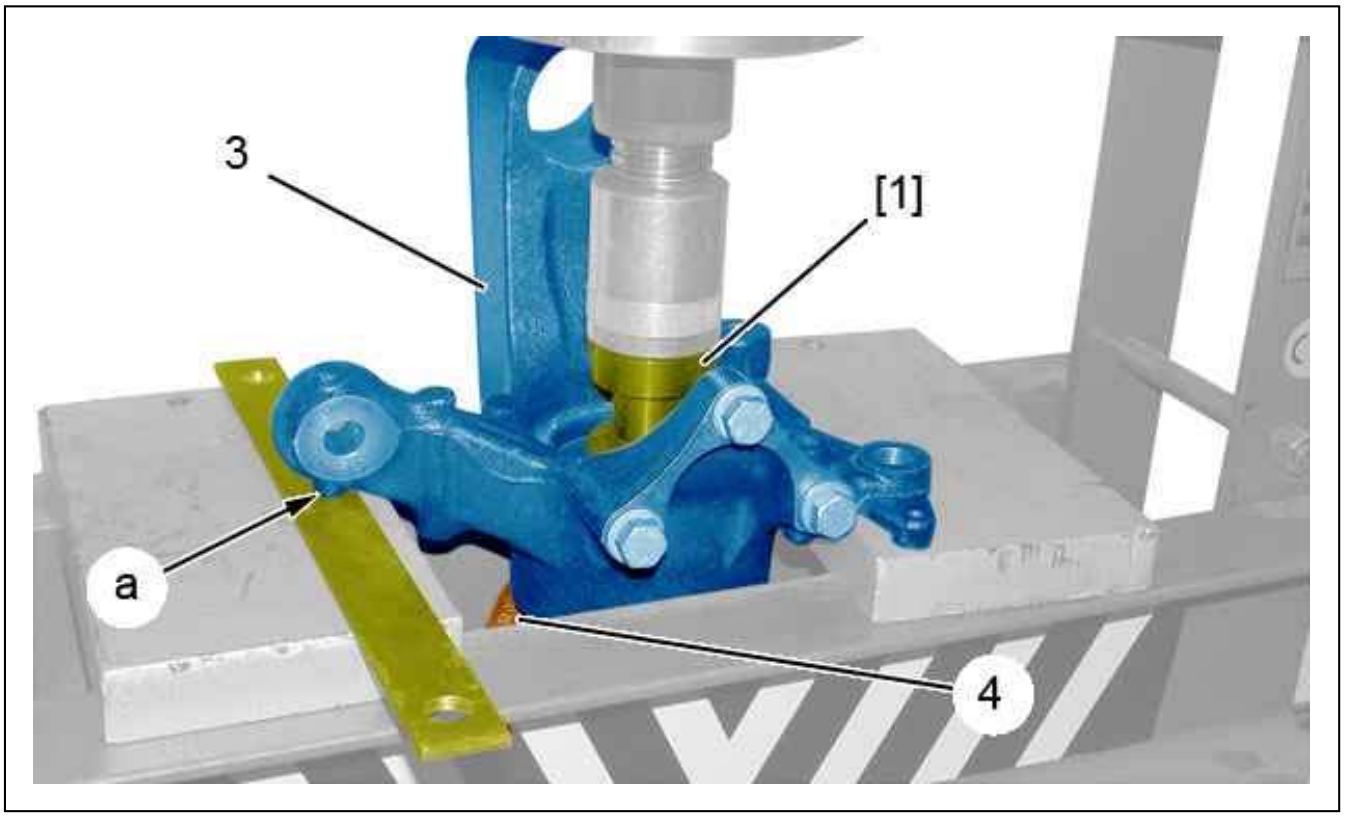

Figure : B3CP0END

Position the pivot (3) using a press ; Insert a 5 mm shim at "a".
Remove pivot (4) hub (3) ; Using tool [1].

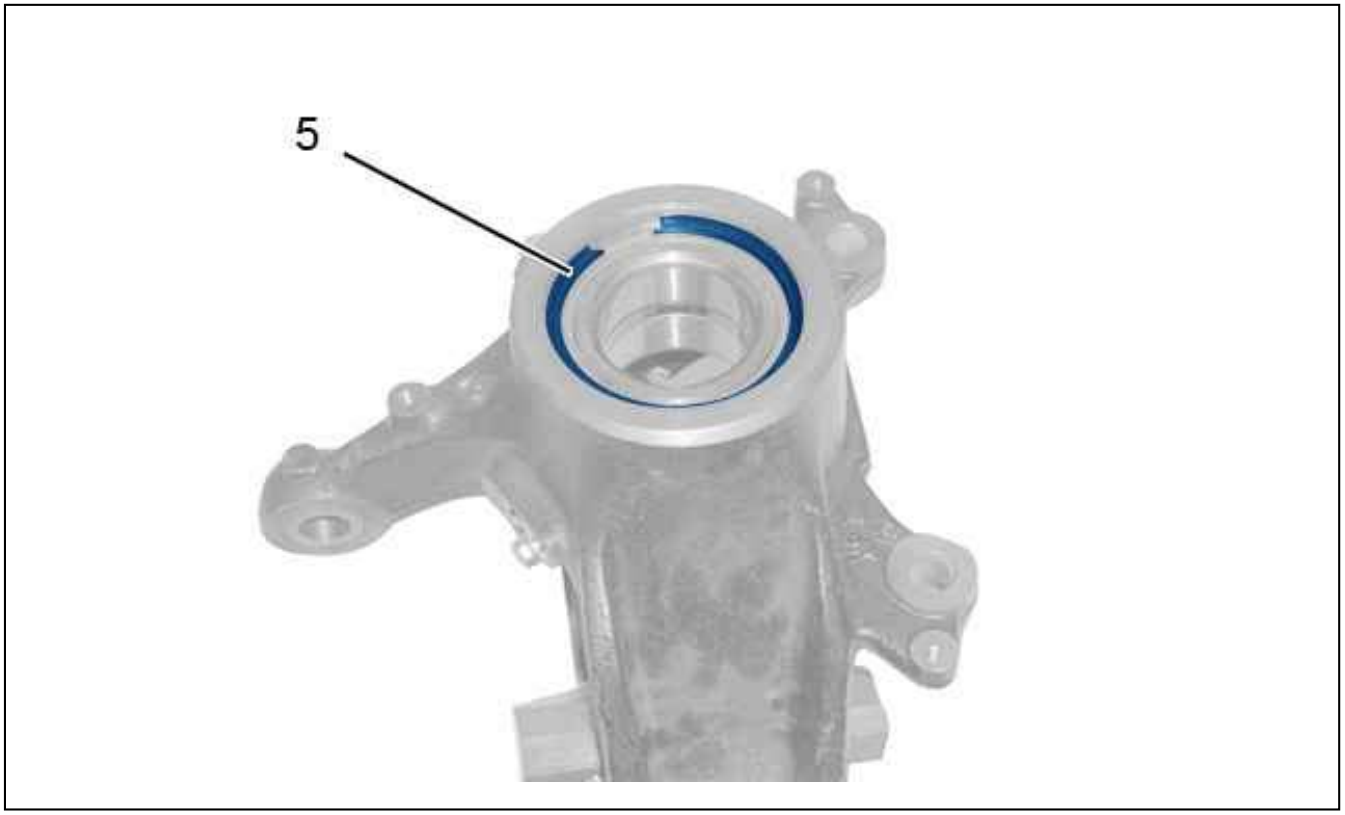

Figure : B3CP0EPD

Remove circlip (5).

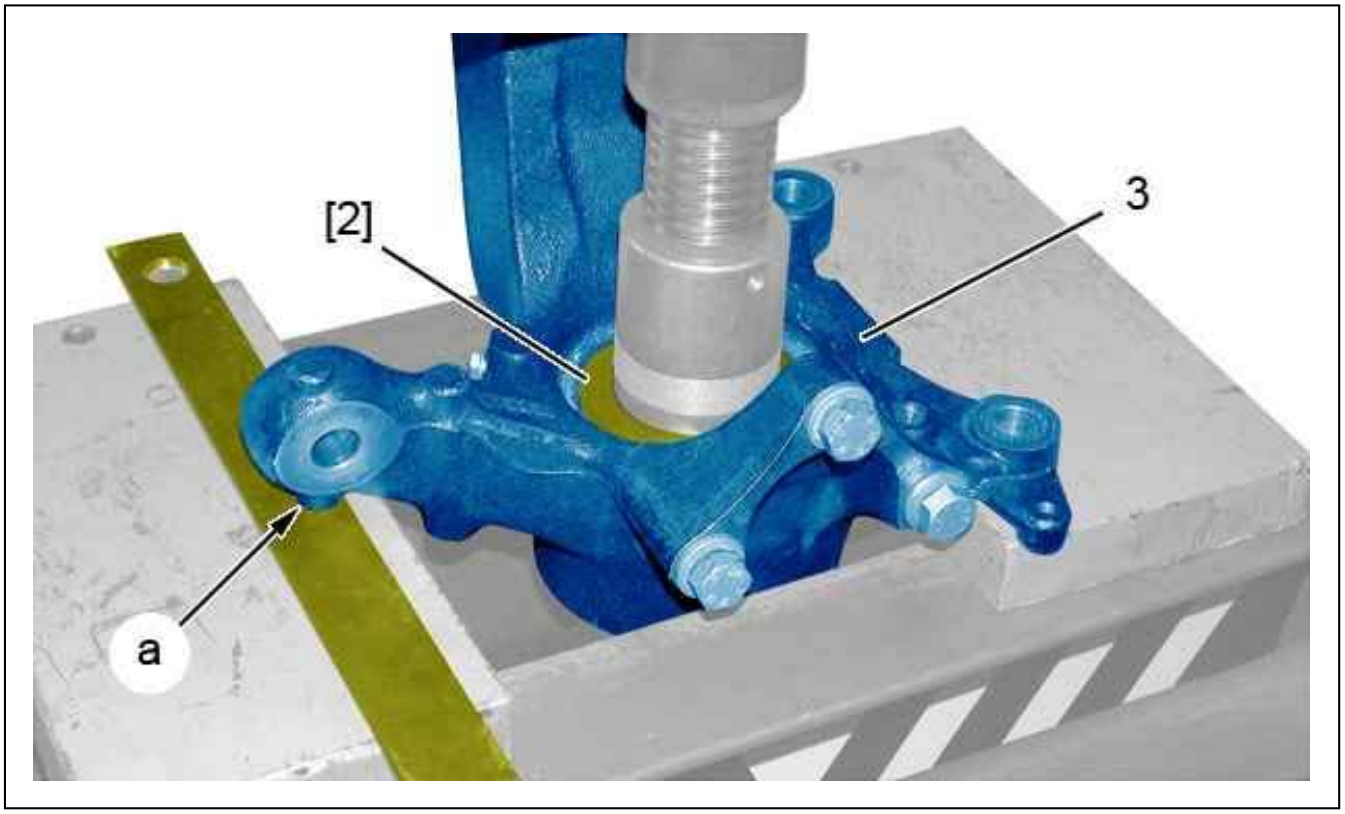

Figure : B3CP0EQD

Position the pivot (3) using a press ; Insert a 5 mm shim at "a" (at "a").
Fit the tool [2].
Extract the bearing using a press.

3. Refitting

ESSENTIAL : Use a new hub bearing and new circlip ; Oil the bearing housing in the pivot and the hub itself ; All parts must be clean and free from any of traces of abnormal wear or damage.

ESSENTIAL : Do not place a bearing with integrated magnetic wheel near a magnetic source or a source of contamination by metallic particles.



Figure : B3CP0ERD

" b" : Face of the bearing with integrated magnetic wheel.

CAUTION : Fit the bearing face " b" towards the driveshaft.

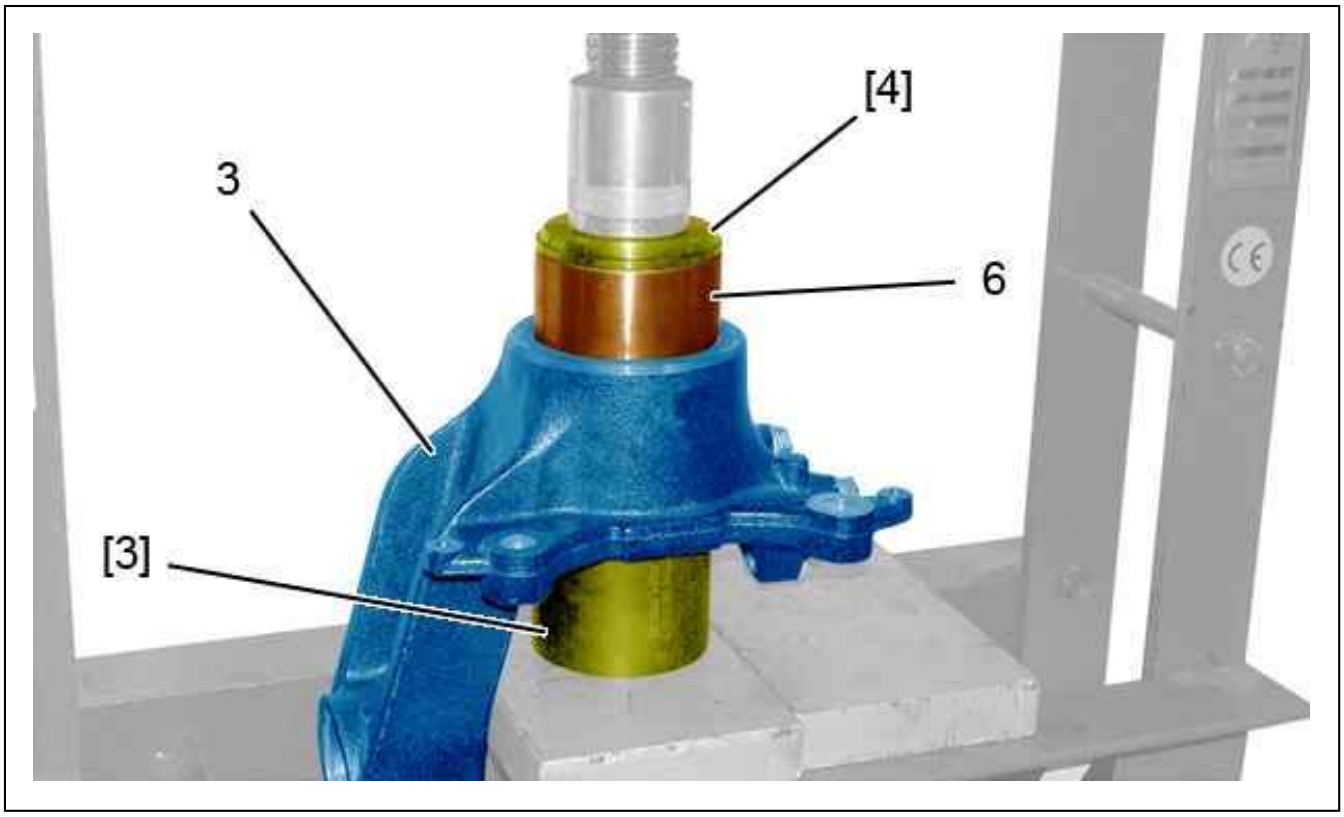

Figure : B3CP0ESD

Fit the tool [3].
Position the hub carrier (3) on the tool [3].
On the press, fit the bearing (6) fully into place ; Using tool [4].

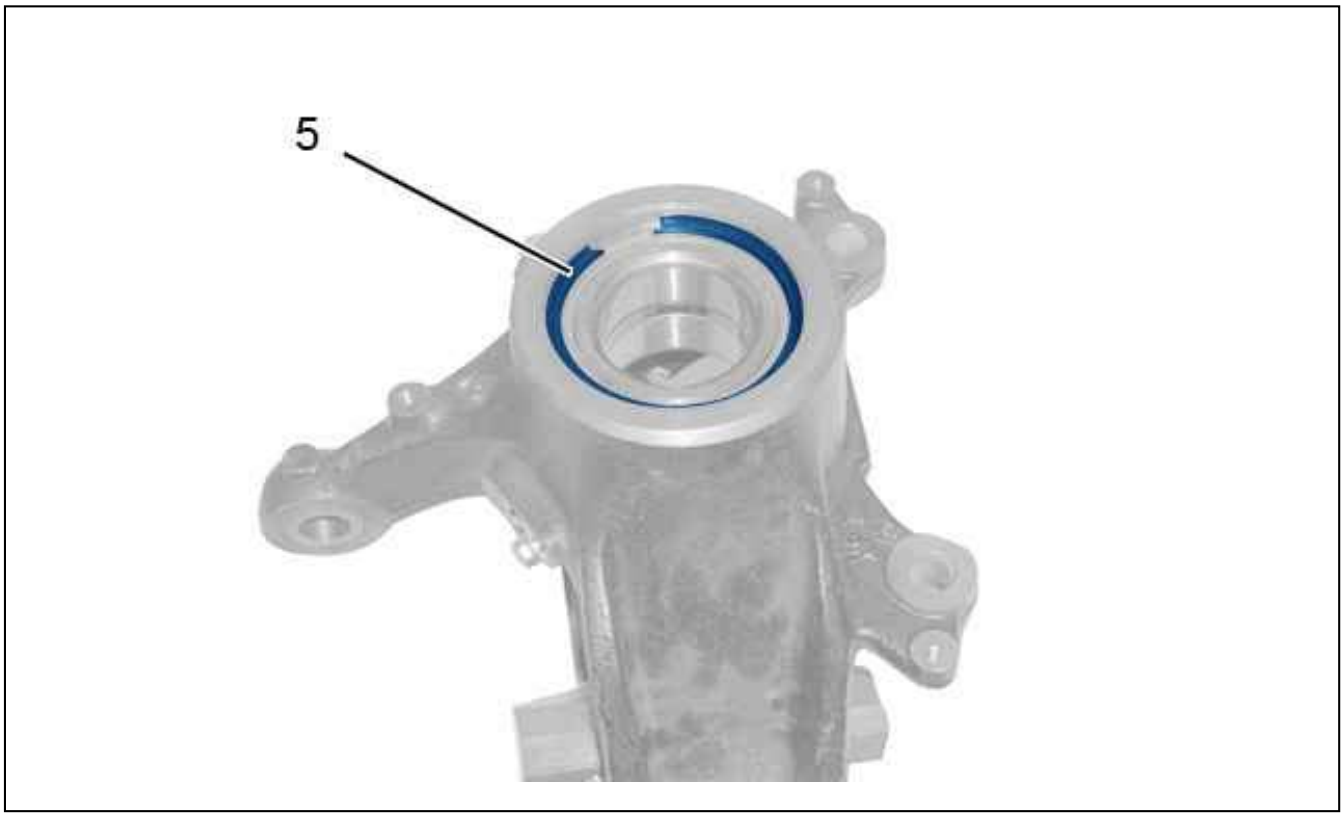

Figure : B3CP0EPD

Fit a new circlip (5).

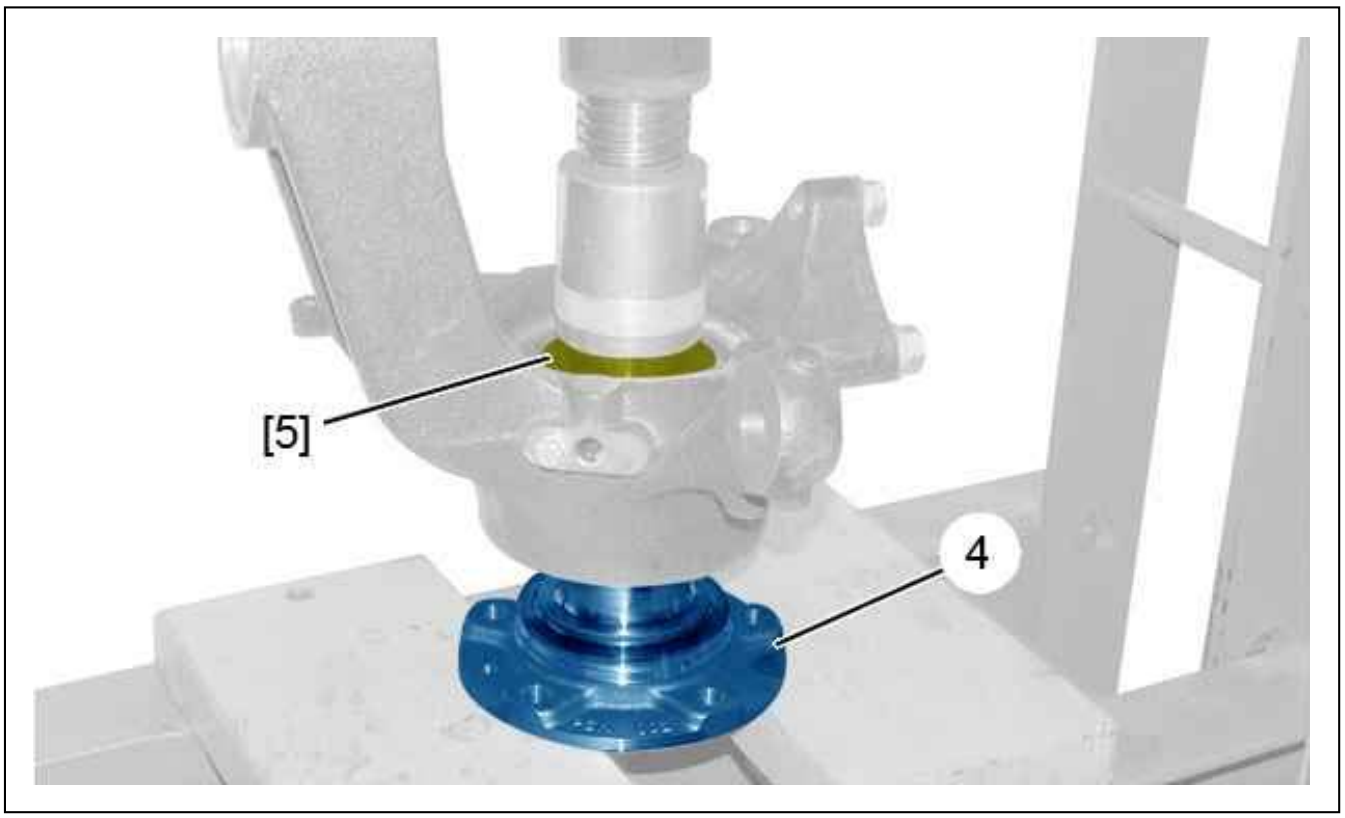

Figure : B3CP0ETD

Position the hub (4) and the pivot (3) using a press.
Fit the tool [5].
Refit the hub (4) to the stop.
Refit :

- The heat shield (2)
- The bolts (1) ; Tightening to 2,5 ± 0,7 daN.m
- The brake disc (see the relevant operation)
- The pivot to the vehicle (see the relevant operation)

GENERAL SPECIFICATIONS : REAR SUSPENSION - SUSPENSION

1. Rear suspension

1.1. On the mechanical suspension version

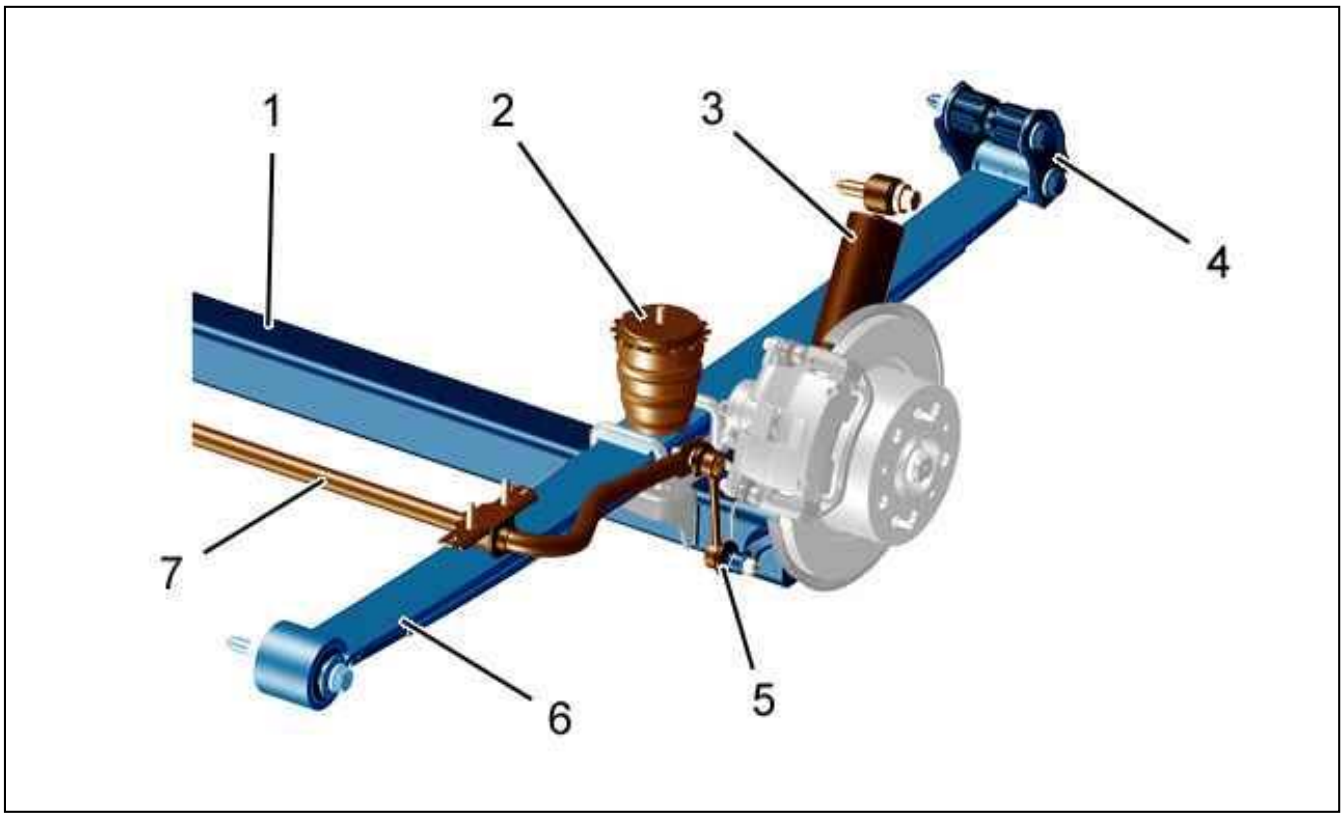

Figure : B3DP0EAD

Rear axle with leaf suspension and telescopic dampers.
(1) crossmember .
(2) Movement stop .
(3) damper.
(4) Suspension leaf lever.
(5) Anti-roll bar rod.
(6) Suspension blade (Single leaf or double leaf).
(7) Anti-roll bar .
2 crossmember widths :

- Crossmember for normal track : 1790 mm
- Crossmember for wide track : 1980 mm

1.2. With pneumatic suspension

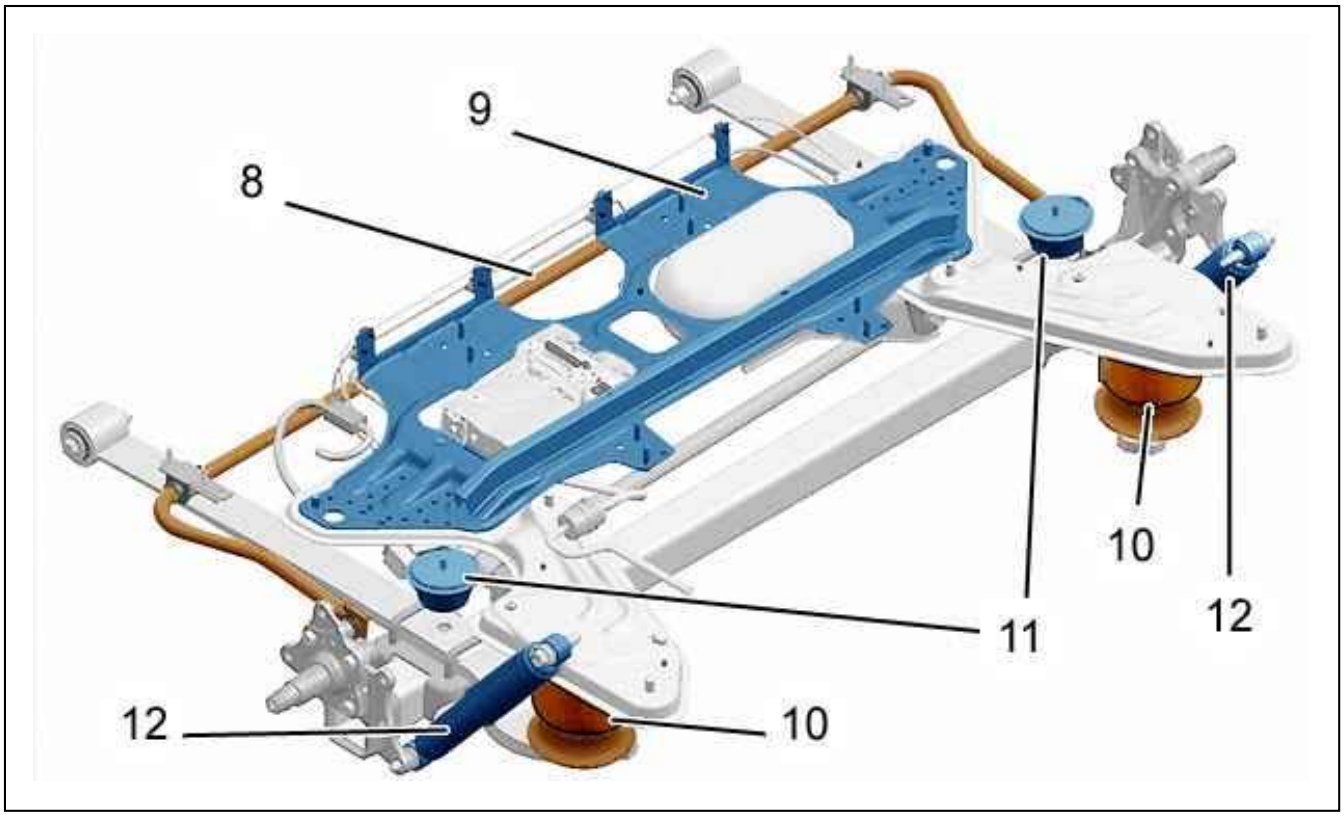

Figure : B3DM02PD

Rear axle with leaf suspension and telescopic dampers.
(8) Anti-roll bar .
(9) Pneumatic suspension unit mounting.
(10) Pneumatic spring .
(11) Movement stop .
(12) damper.

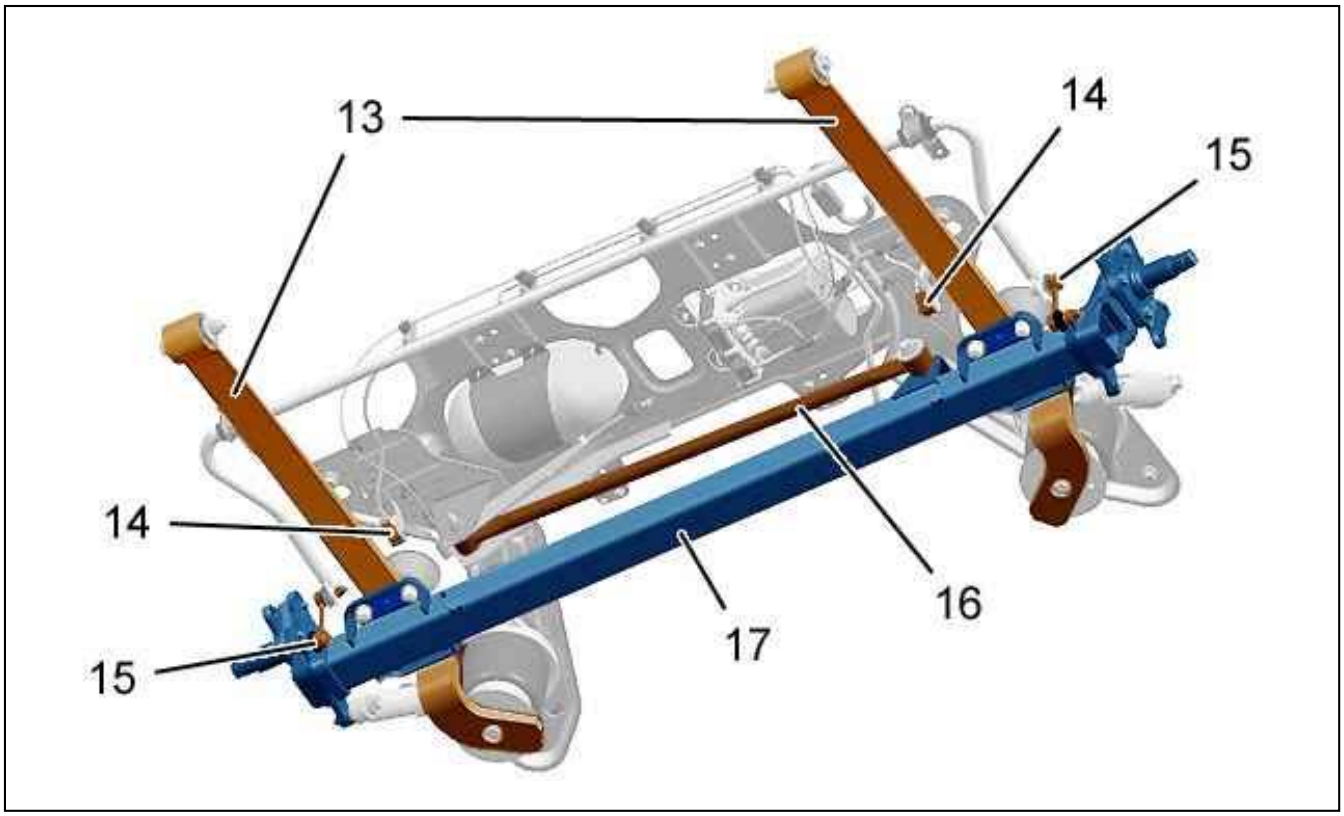

Figure : B3DM02QD

(13) Suspension blade.
(14) Body height sensor .
(15) Anti-roll bar rod.
(16) Rear stabiliser bar.
(17) crossmember .

1.3. Hub bearing

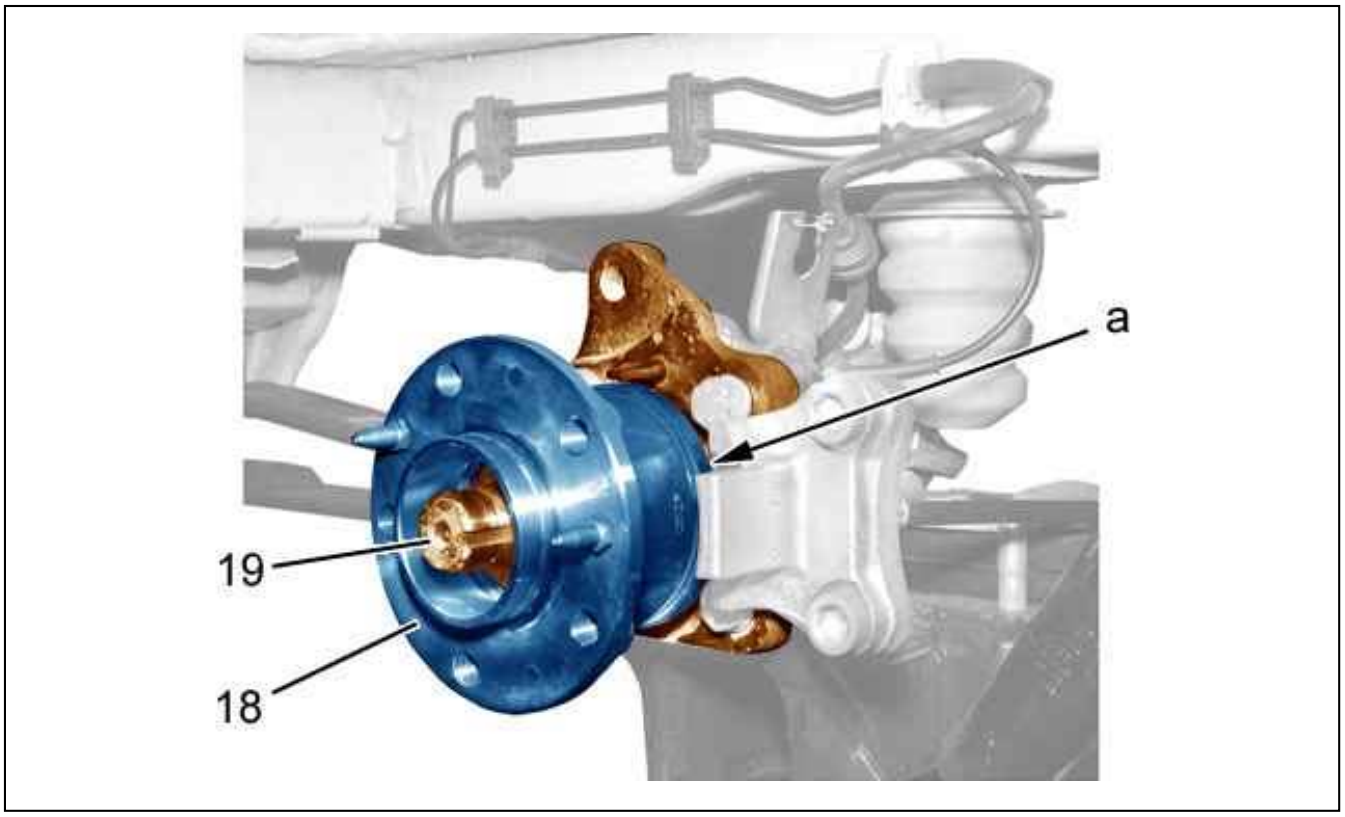

Figure : B3DM02RD

The hub bearing (18) is fitted free on the stub axle (19).
"a" : Magnetic target integral to the hub bearing.

1.4. Stub axle

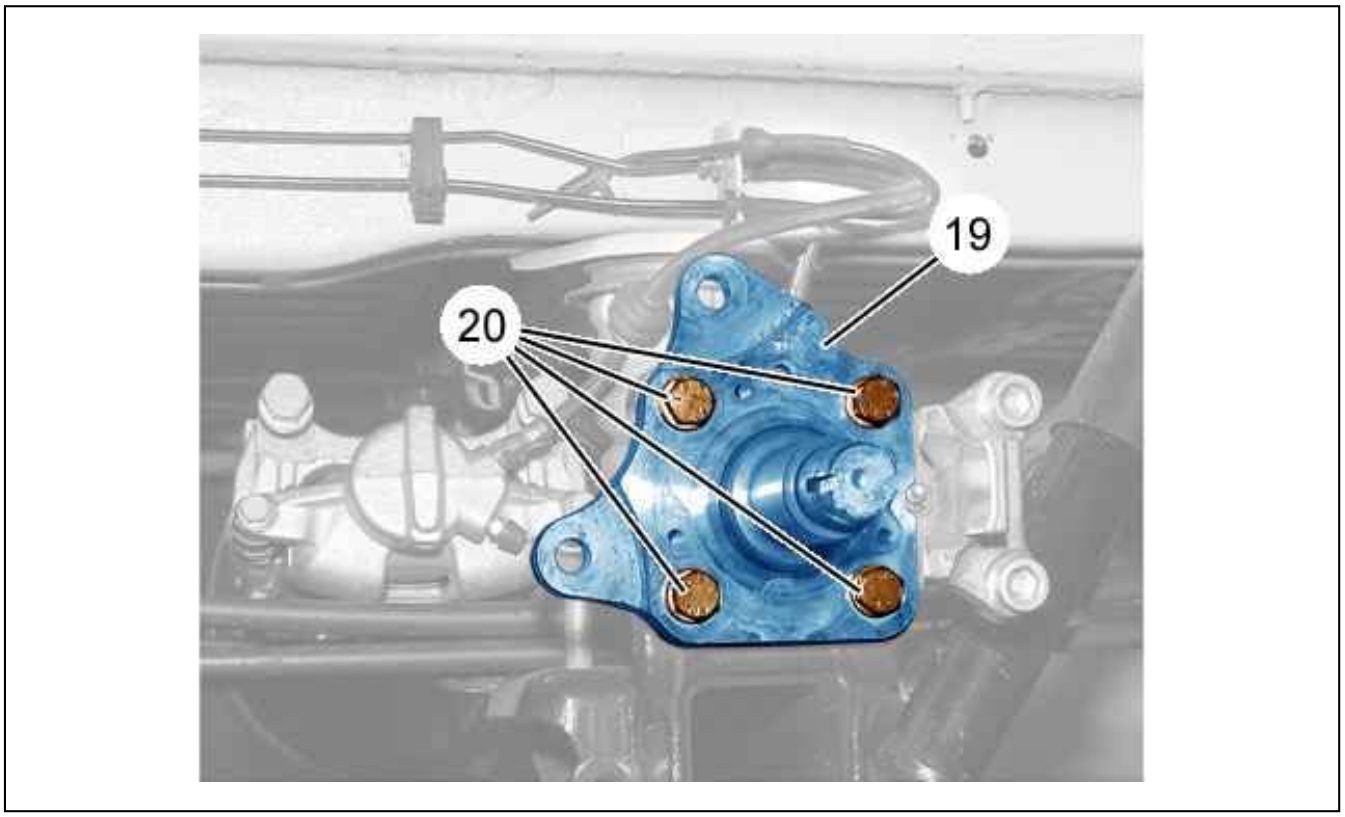

Figure : B3DM02SD

(19) Stub axle.
(20) bolts .
Stub axle (19) connected to the rear crossmember, fixed by four screws (20).
Stub axle diameter : 40 mm .

2. Pneumatic suspension

2.1. Body height sensor

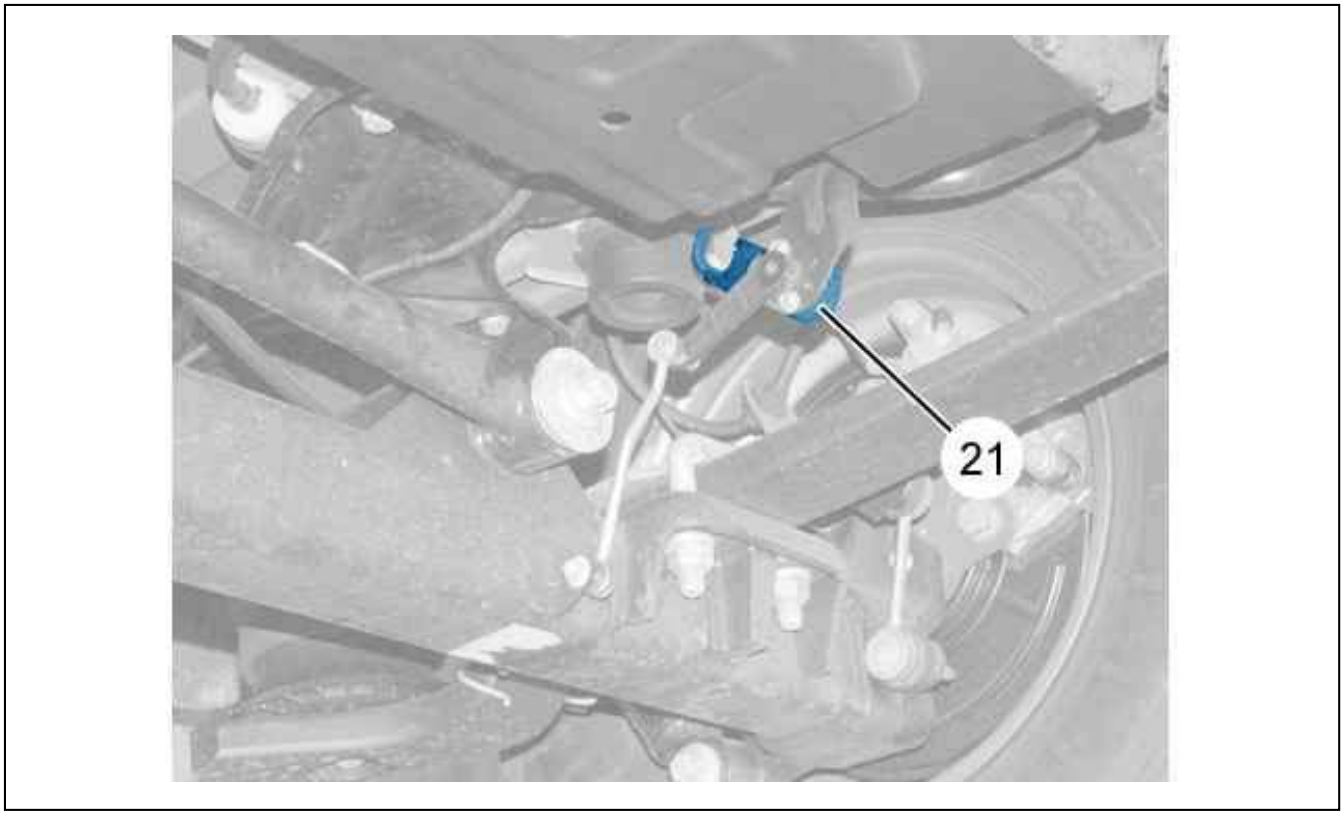

Figure : B3DM02TD

(21) Body height sensor (on each side).
The 2 body height sensors placed on the rear axle crossmember provide the ride height position information.

2.2. Air compressor

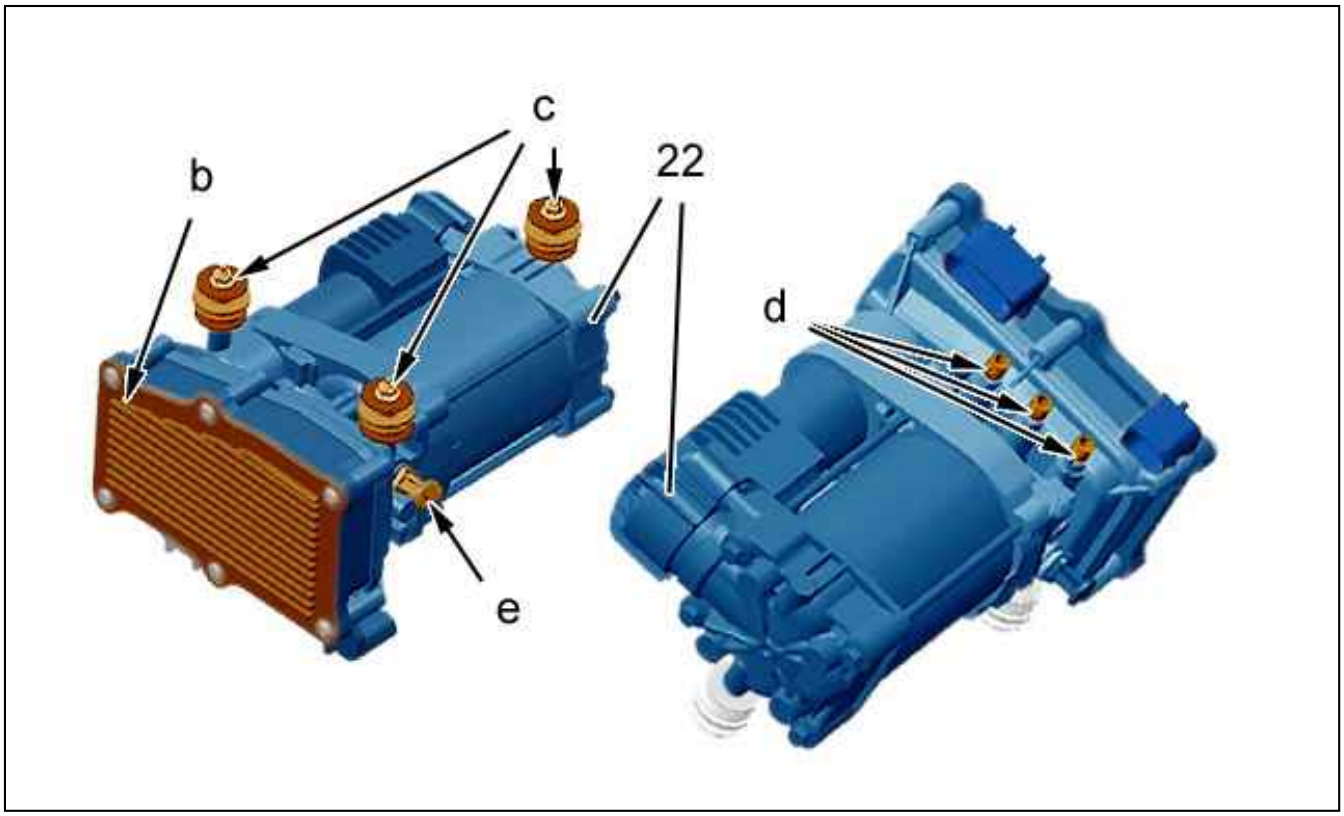

Figure : B3BM029D

(22) Compressed air compressor.
"b" Suspension ECU cover .
"c" Silentblock.
"d" Quick-fit pneumatic union (Pneumatic spring - Compressed air reservoir).
"e" Quick-fit pneumatic union (Intake/discharge filter pipe union).

2.3. Compressed air reservoir

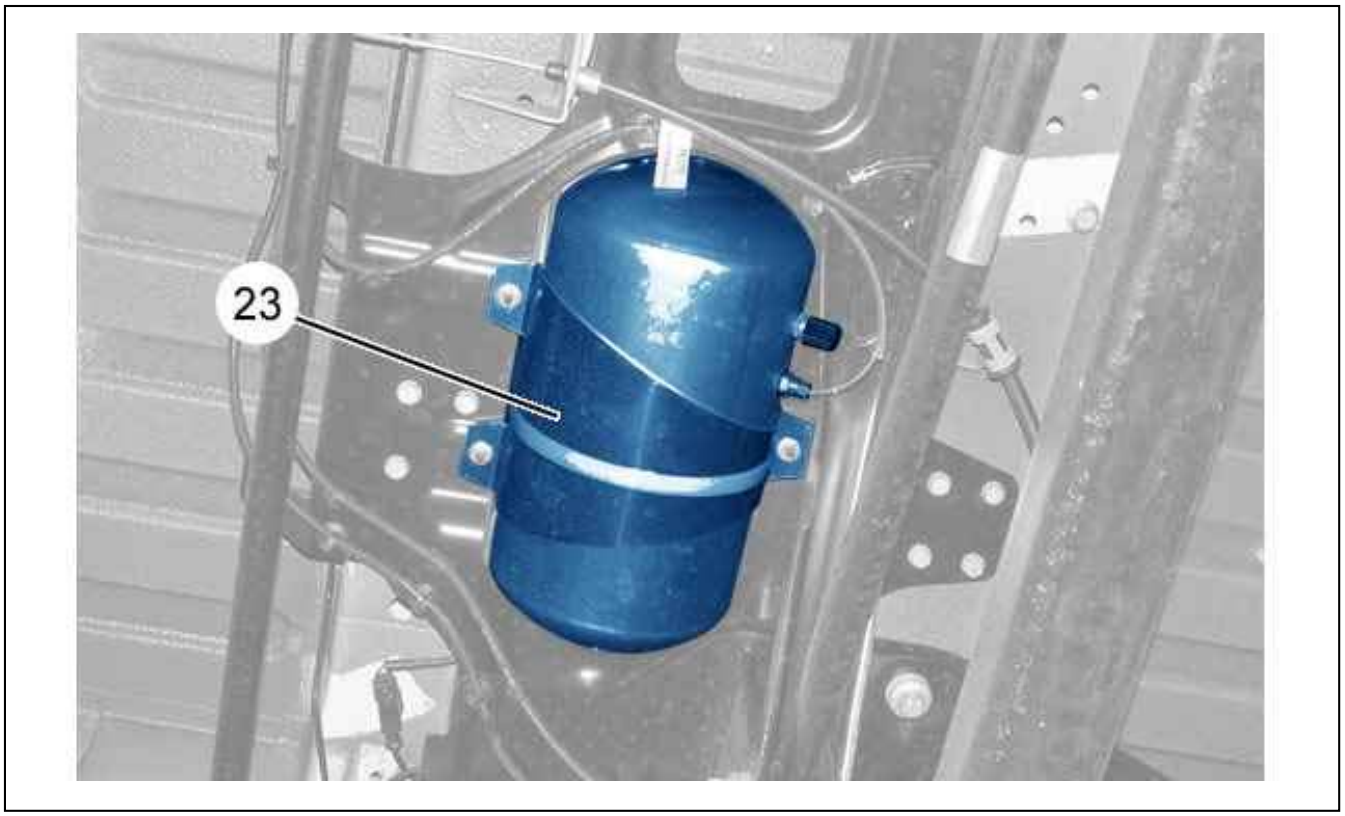

Figure : B3BM02AD

(23) Compressed air reservoir .
The compressed air reservoir (23) contains 5,4 litres of air at a pressure of approximately 17 bars.

2.4. Pneumatic spring

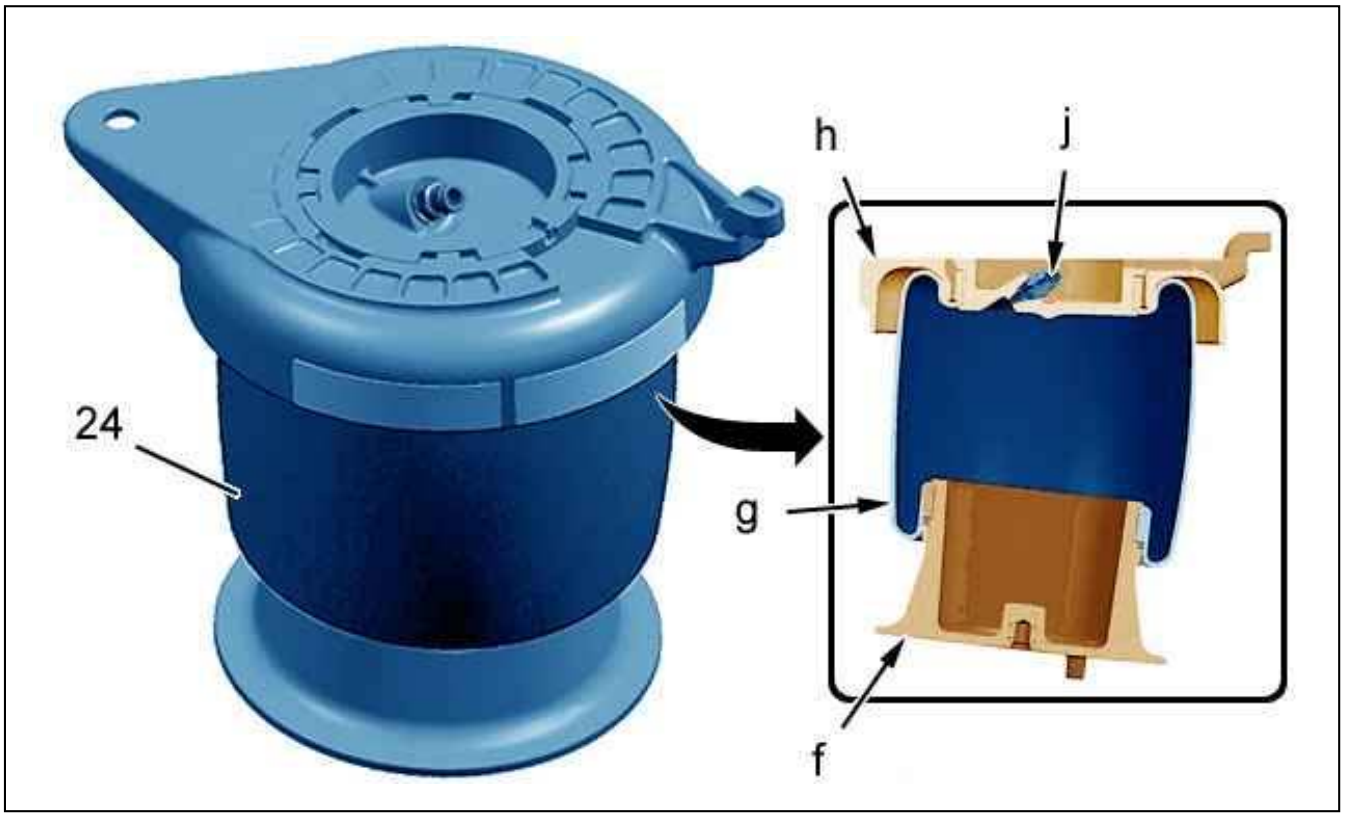

Figure : B3BM02BD

(24) Pneumatic suspension spring .
Composition of a pneumatic spring :

- "f" Pneumatic spring winder piston
- "g" Pneumatic spring diaphragm
- "h" Pneumatic spring upper support
- "j" Pneumatic union

Pressure in the pneumatic springs at the reference level : Approximately 7,3 bars.

2.5. Air union

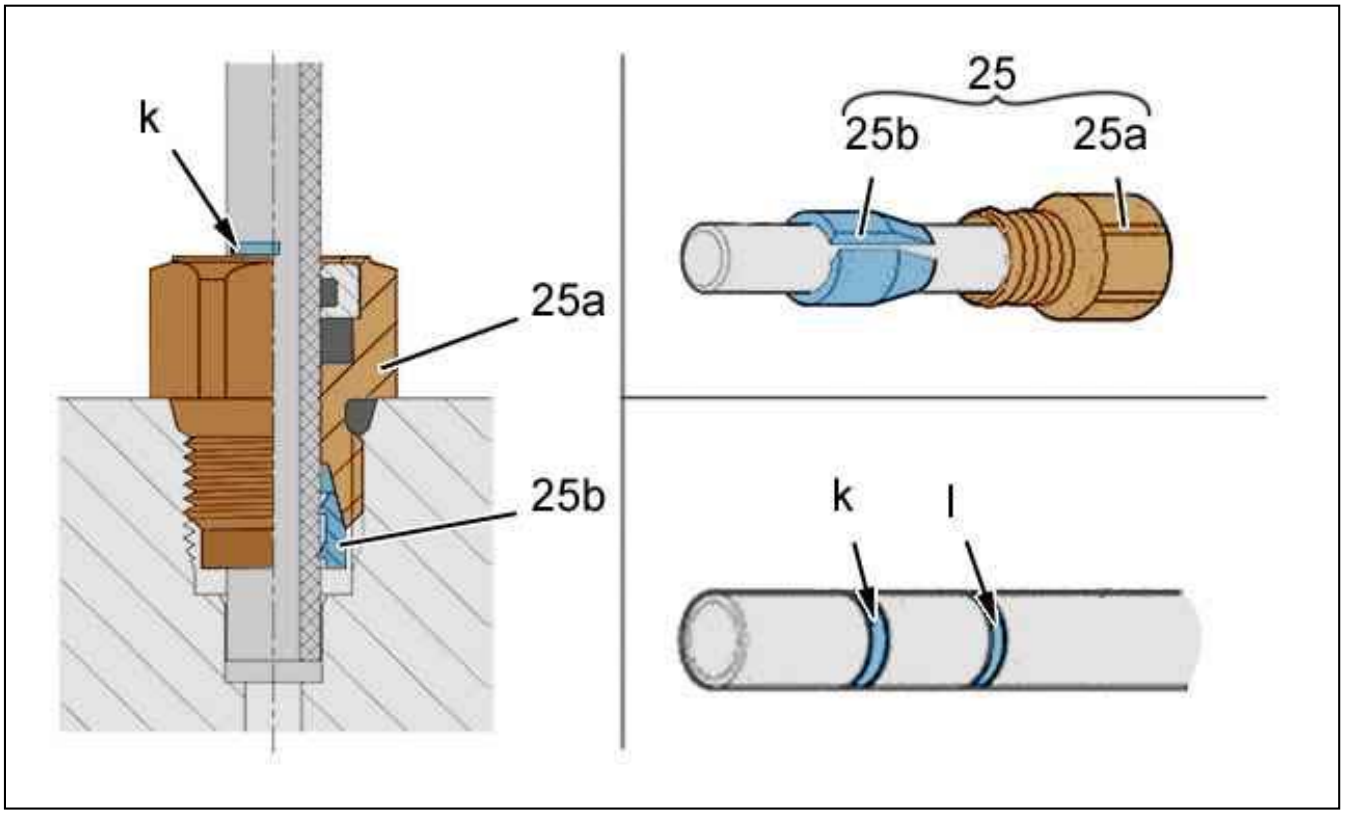

Figure : B3BM02CD

(25) Air union "Voss" :

- (25a) Union screw
- (25b) Oval-shaped handle

ESSENTIAL : The removal operation renders the union useless. Always replace the union each time the pneumatic suspension circuit pipes are uncoupled.

CAUTION : When fitting the pipe, only the mark "k" should remain visible (the mark "l" corresponds to the minimum pressing of the pipe).

3. Suspension geometry

N.B. : The geometry specifications are given with the values for checking and adjusting the axle geometries.

DISMANTLING - RE-ASSEMBLY : FRONT DAMPER - SPRING ASSEMBLY (ON THE WORK BENCH)

ESSENTIAL : Observe the safety and cleanliness recommendations .

1. Tooling

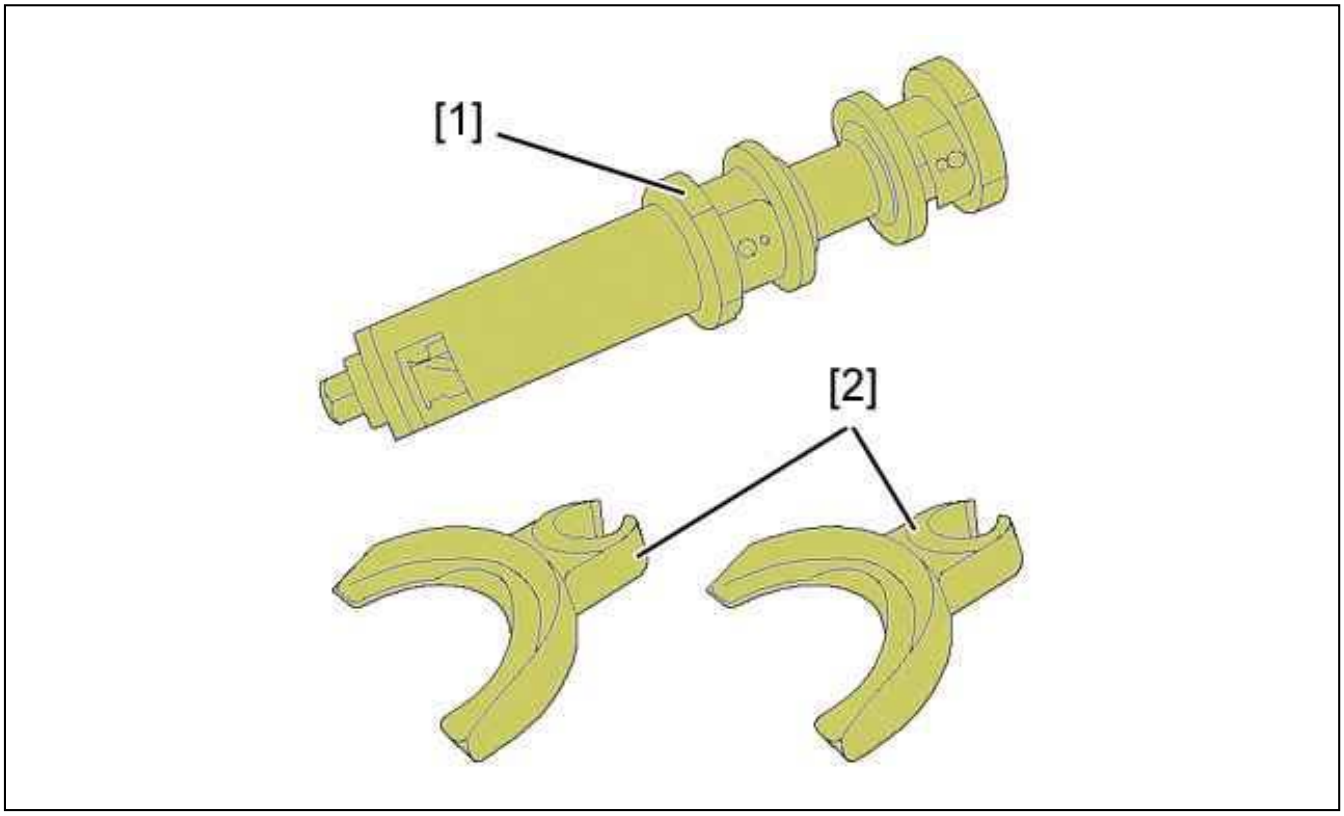

Figure : E5AP34QD

Reference	Designation	Reference	Reference
[1]	compressor	4137-T.M90	MG M90
[2]	Jaws	4137-T.M3	MG M3

CAUTION : Check the presence and condition of the rubber protections on the fixed and sliding cups of the spring compressor.

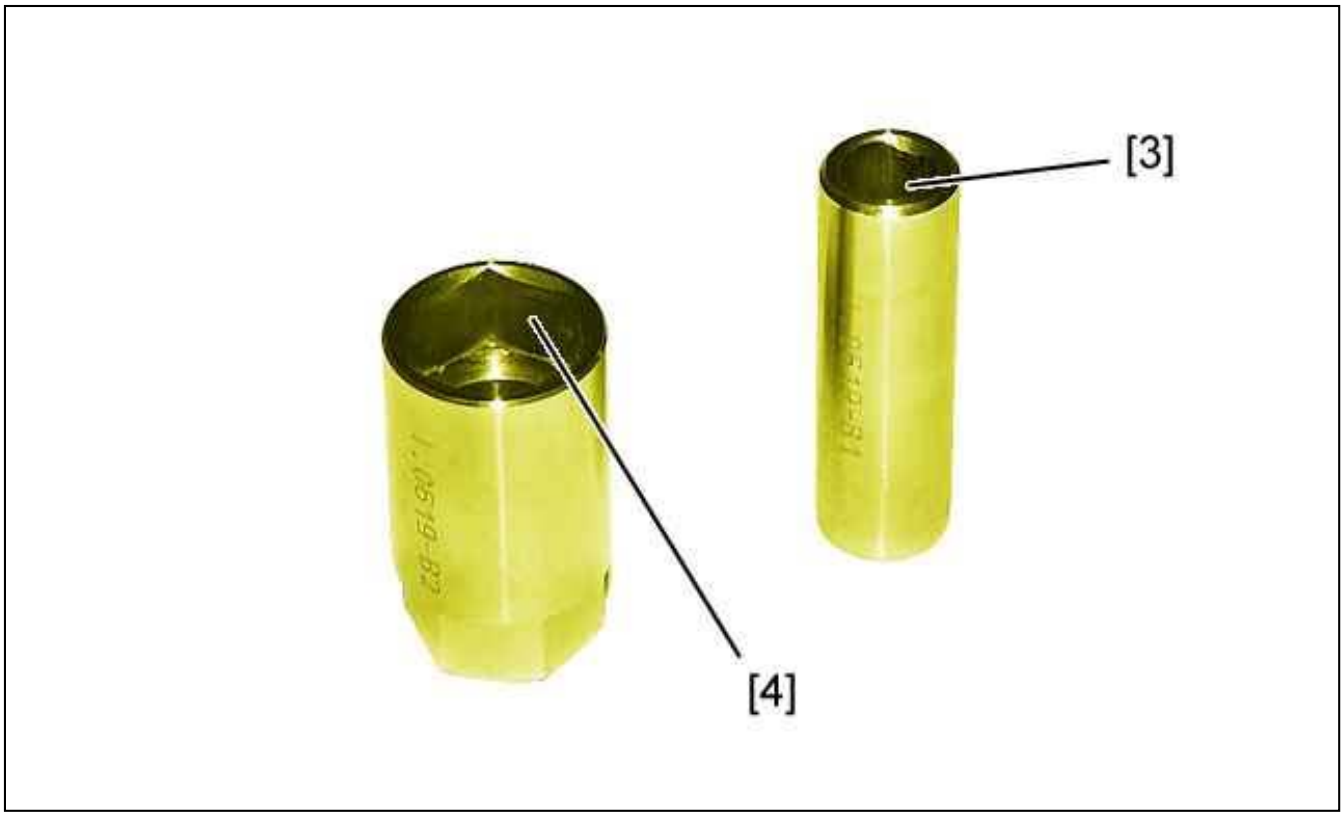

Figure : E5AP34RD

Reference	Designation	Reference	Reference
[3]	Damper rod retaining socket	5709-T.S1	(-).0619 S1
[4]	Socket for damper nut	5709-T.S2	(-).0619 S2

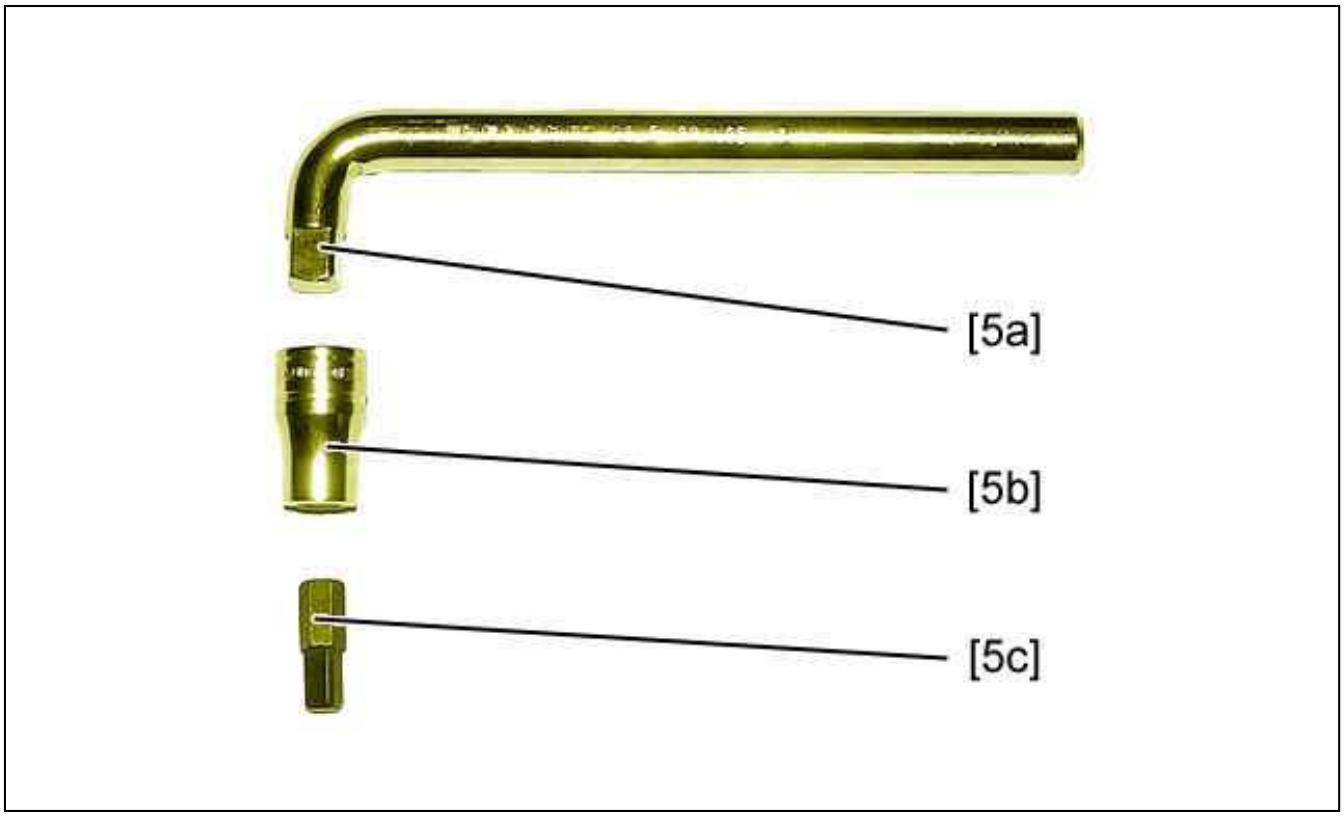

Figure : E5AP34SD

Reference	Designation	Reference	Reference
[5]	pivot spreading tool (Type FACOM DS) (DS.J5) kit	5709-T T	(-).0619 T
[5a]	Spanner Facom (type DS.P)	-	-
[5b]	socket Facom (type J.236)	-	-
[5c]	adaptor Facom (type DS.11A)	-	-

2. Removing

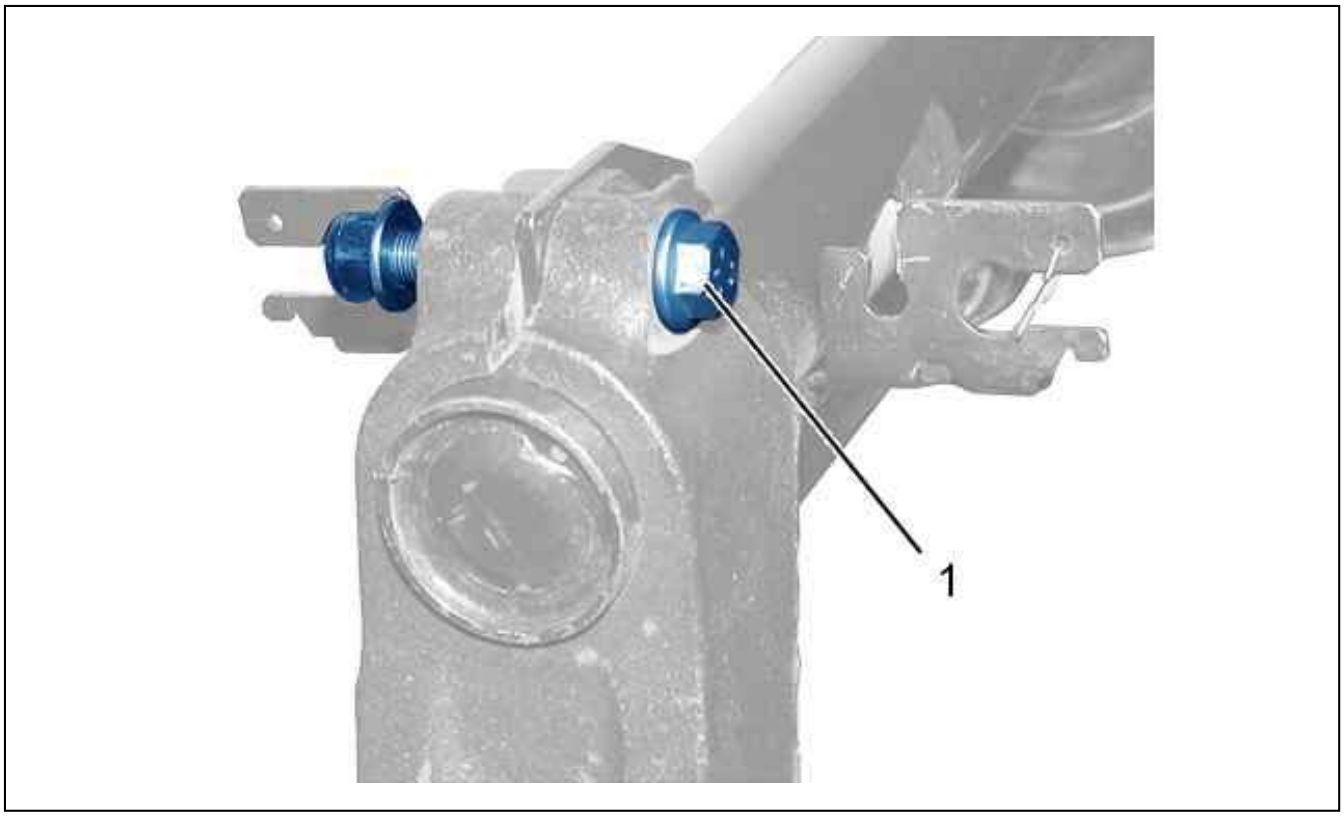

Figure : B3BP1D5D

Remove the bolt (1).

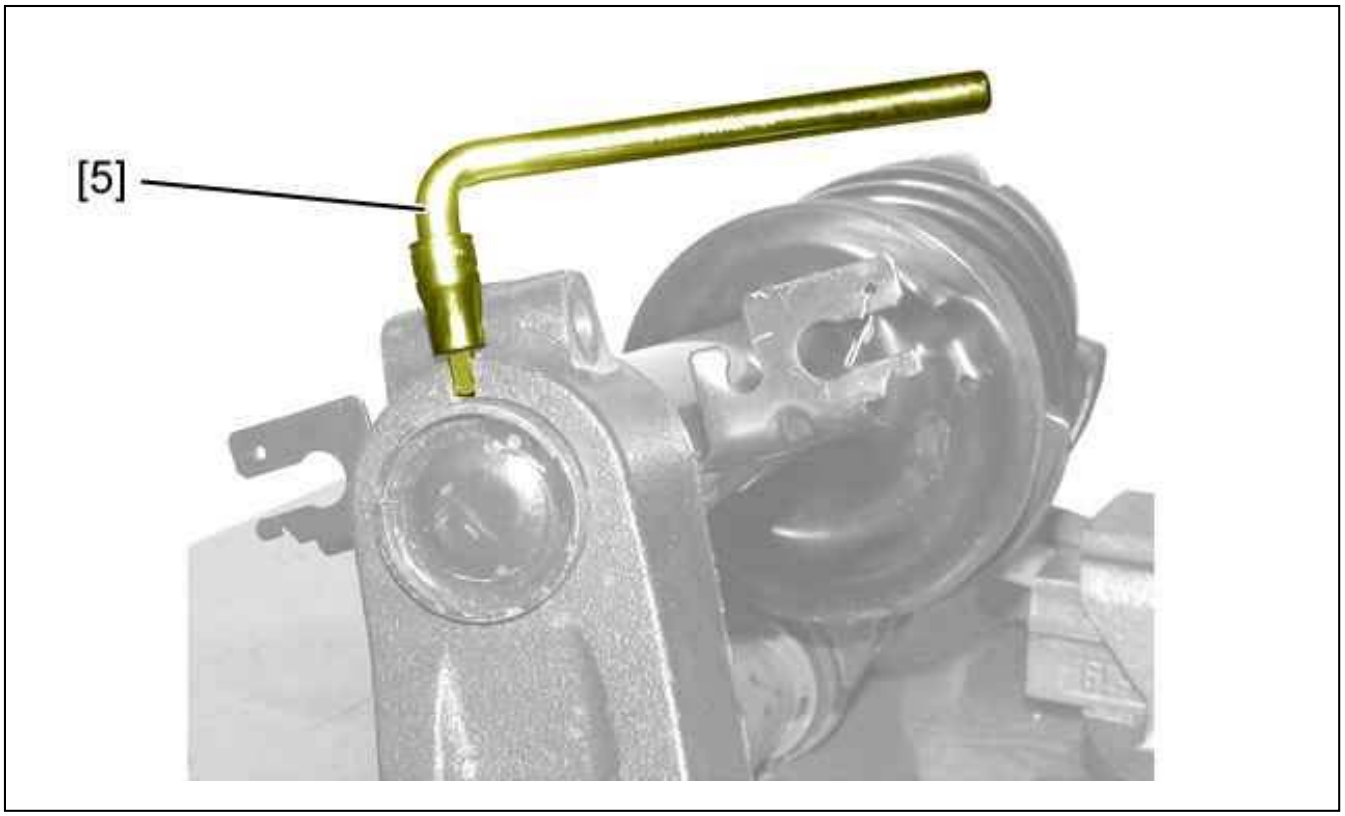

Figure : B3BP1D6D

Position the tool [5] in the front pivot opening .
Turn a quarter turn to open the pivot.
Uncouple the front pivot .
Remove the tool [5].

CAUTION : Do not put a suspension spring in direct contact with any metallic object or tool.

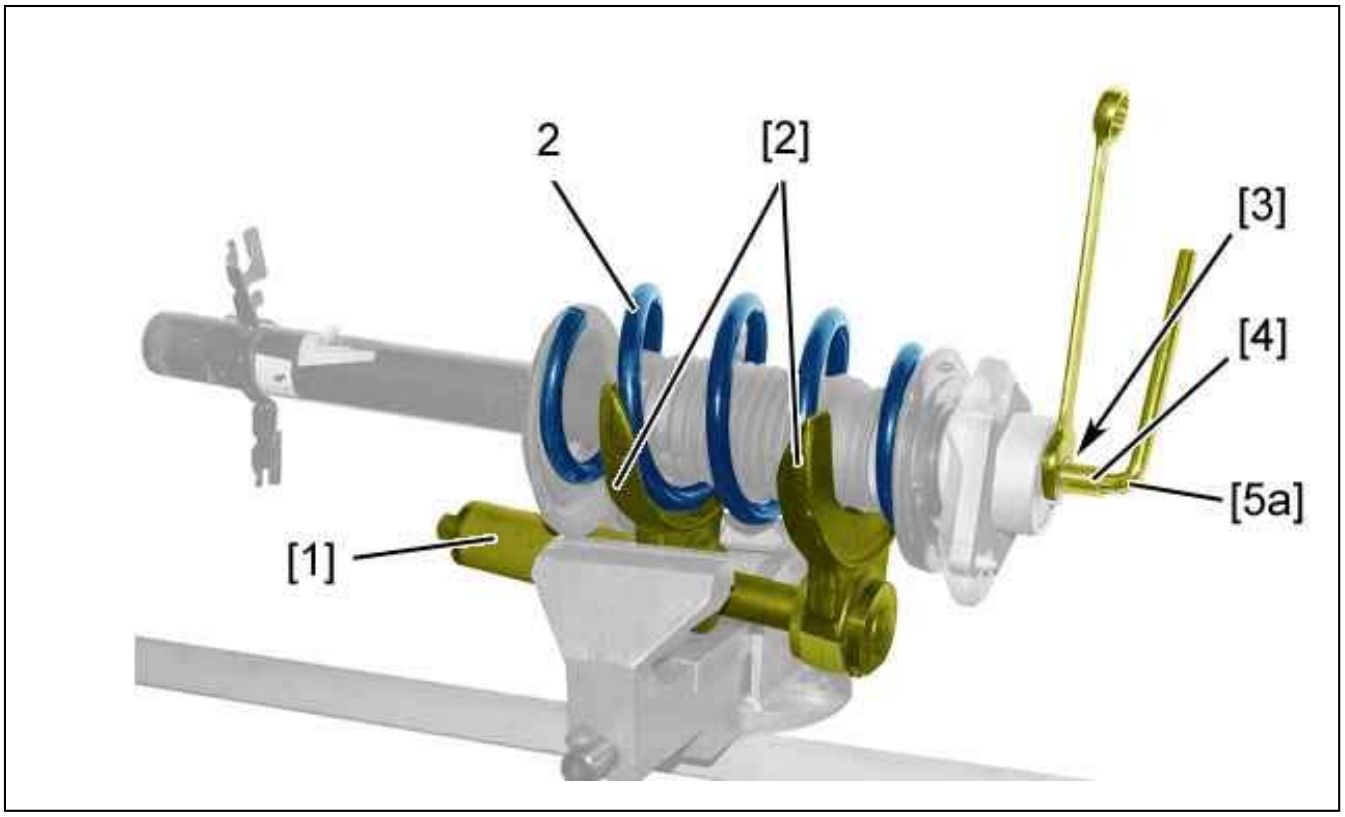

Figure : B3BP1D7D

Grip compressor [1] equipped with its claws [2] in a vice.
Tighten against the fixed claw.
Compress the spring (2) ; Using the tools [1], [2].
Slacken the damper rod nut ; Using the tools [3], [4], [5a].

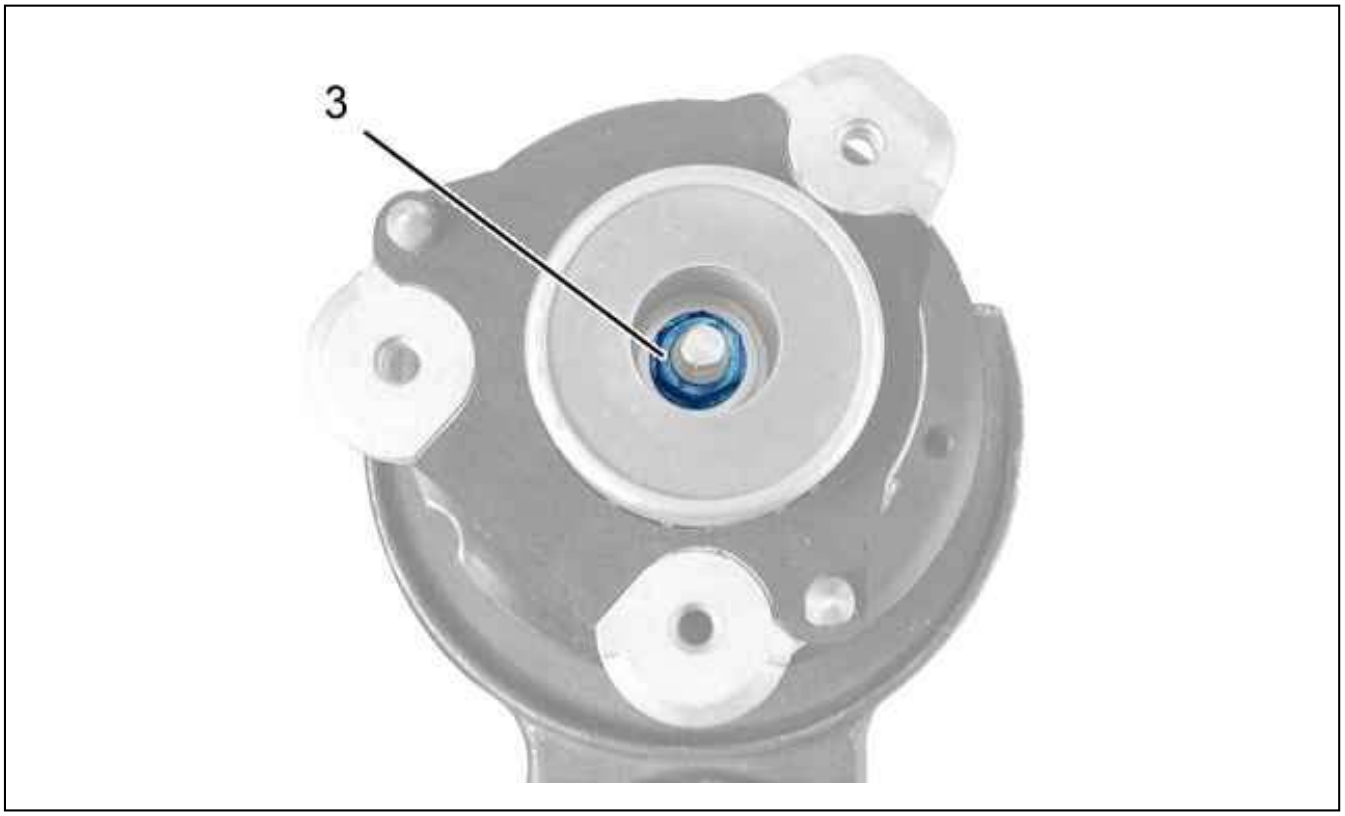

Figure : B3BP1D8D

Remove the nut (3) ; Using the tools [3], [4].

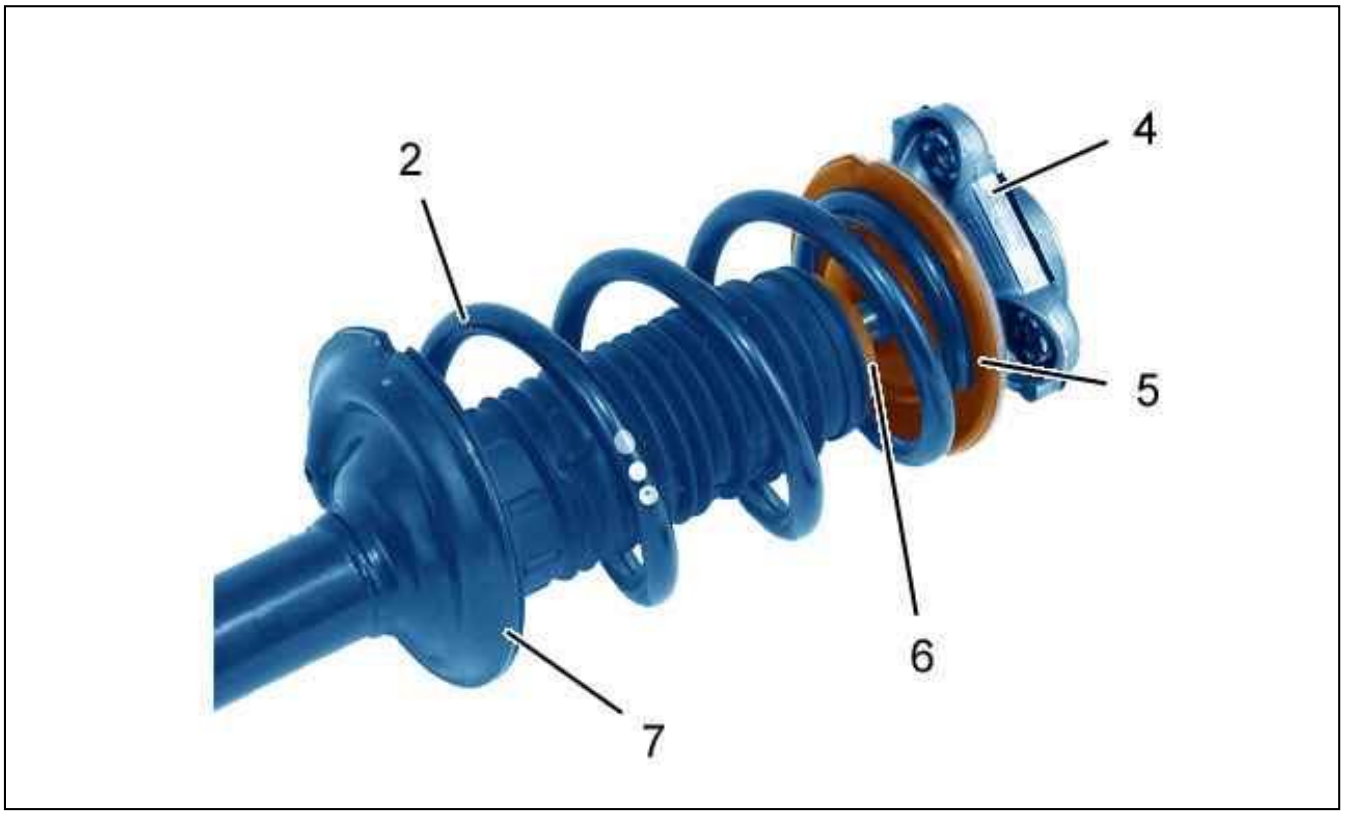

Figure : B3BP1D9D

Remove :

- The damper bracket (4)
- The thrust cup (5) fitted with its rubber protector
- Damper (7) provided with bump stop (6)

Release the spring (2) ; Using the tools [1], [2].

3. Refitting

CAUTION : Always fit new Nylstop nuts.

CAUTION : Apply water-repellent grease to the ball stop (8) (index G1).

Grip compressor [1] equipped with its claws [2] in a vice.
Tighten against the fixed claw.
Compress the spring (2) ; Using the tools [1], [2].

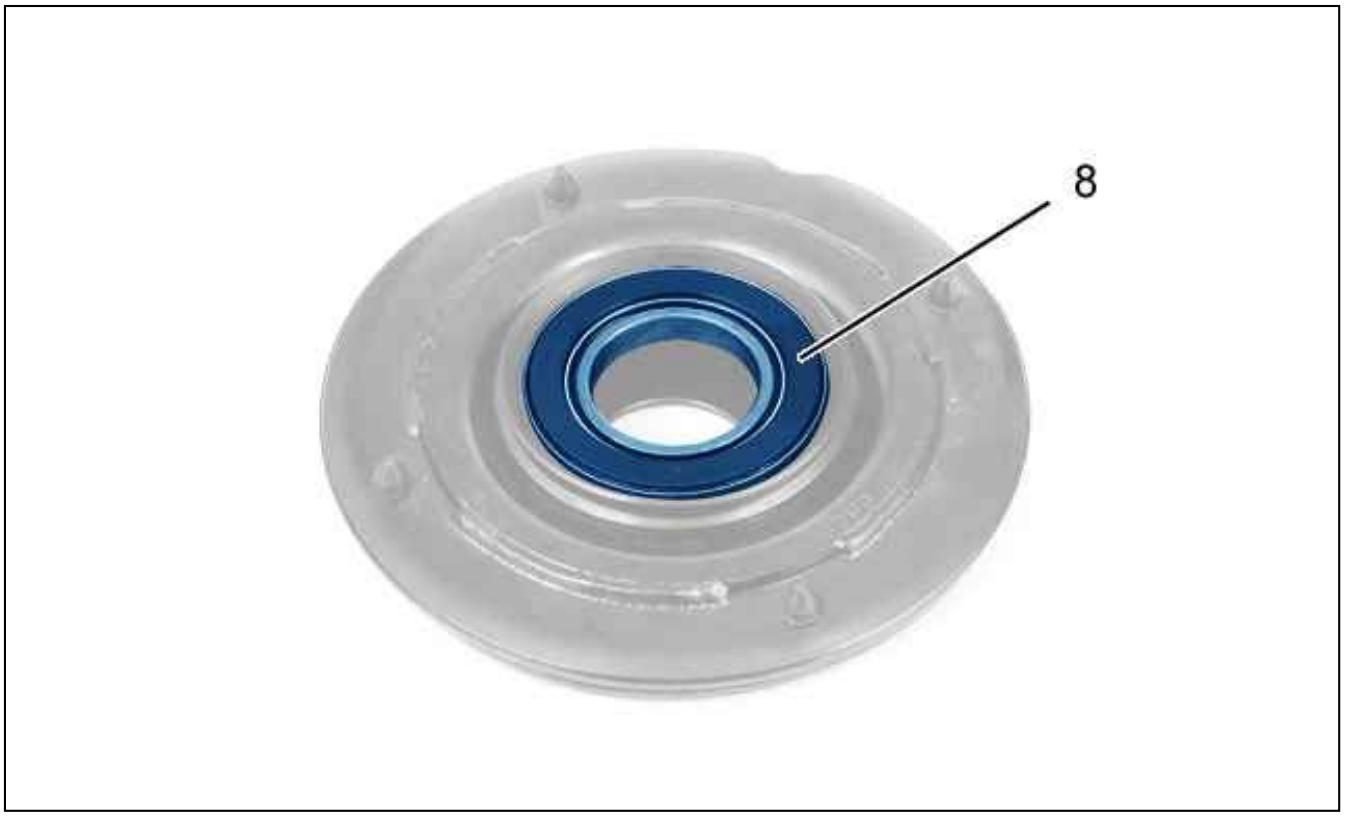

Figure : B3BP1DAD

Check the condition of the ball stop (8).
Replace the ball stop (8) (if necessary).

CAUTION : Observe the direction of fitting of the ball stop (8).

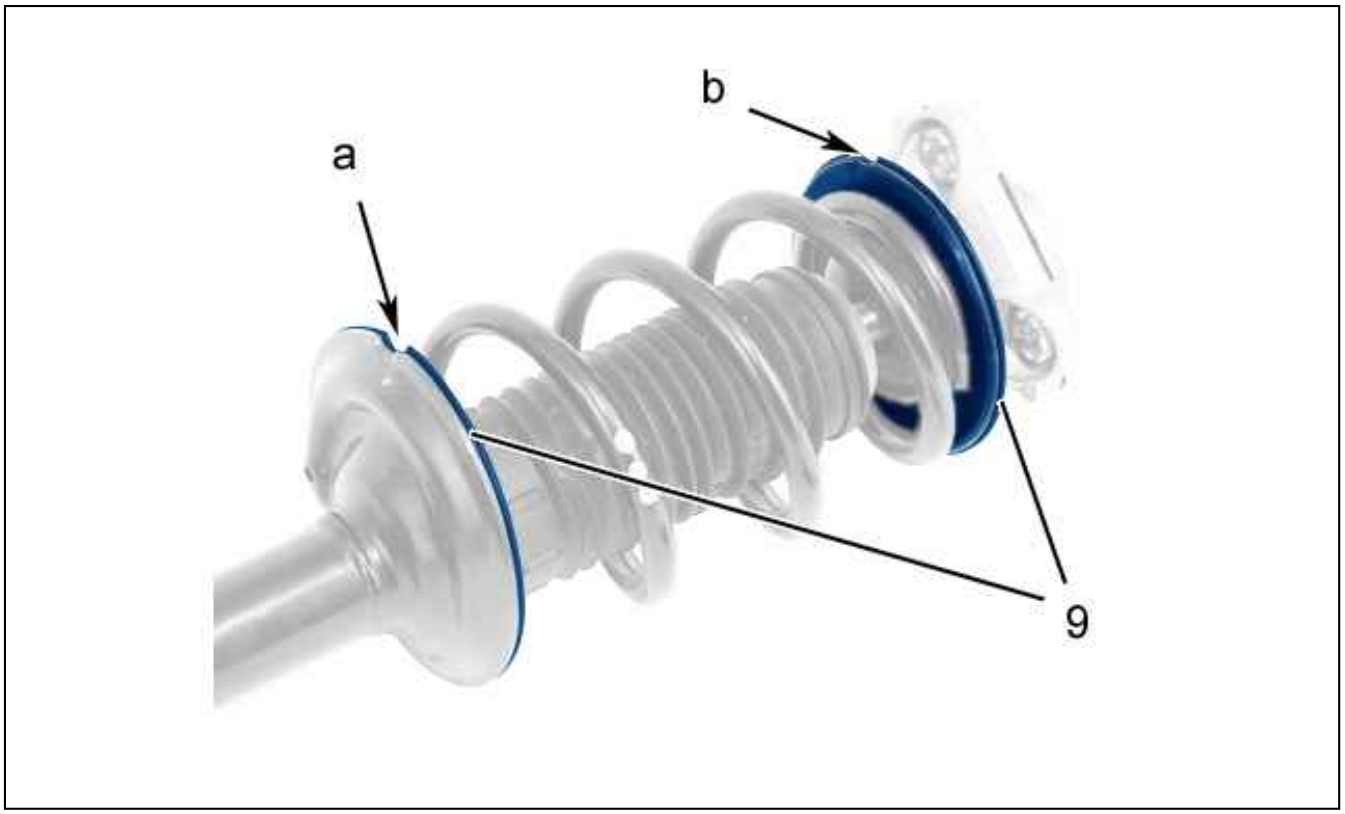

Figure : B3BP1DBD

CAUTION : Check the condition of the suspension spring (absence of signs of impact, scratches or corrosion spots) The paint coating on the suspension spring should not be damaged, leaving the metal bare. Check that the rubber protectors (9) are present and in good condition.

CAUTION : Observe the positioning of the rubber protectors (9) (as "a", "b").

Refit :

- Damper (7) provided with bump stop (6)
- The thrust cup (5) fitted with its rubber protector
- The damper bracket (4)
- The nut (3) ; Using the tools [3], [4]

Tighten the nut (3) to 9 ± 0,8 daN.m.
Release the spring (2) ; Using the tools [1], [2].
Position the tool [5] in the front pivot opening .
Turn a quarter turn to open the pivot.
Couple the front pivot .

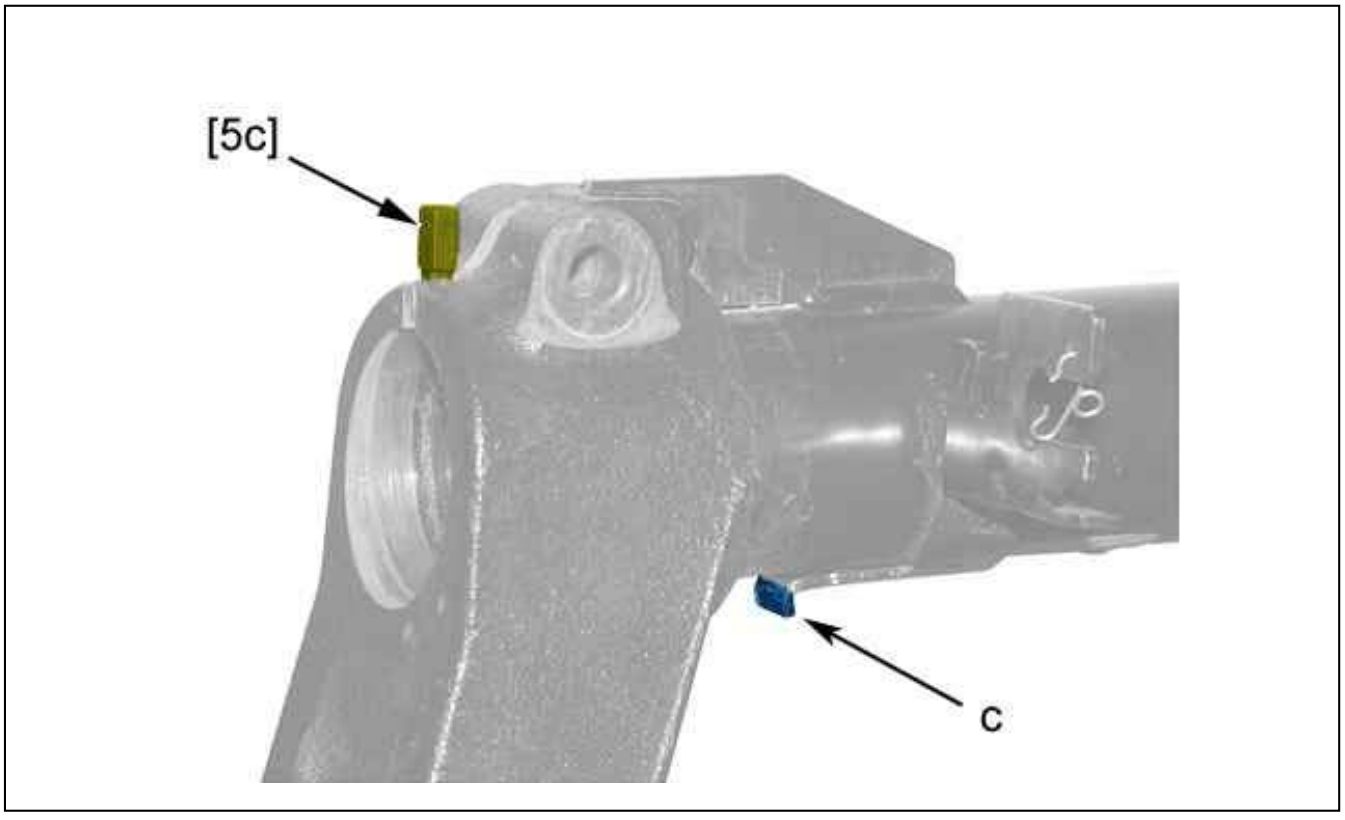

Figure : B3BP1DCD

Bring the front pivot as far as it go on the damper (at "c").
Refit bolt (1).
Remove the tool [5].
Tighten the bolt (1) to 12 ± 0,4 daN.m.

REMOVING - REFITTING : SUSPENSION BLADE REAR FLEXIBLE MOUNTINGS

ESSENTIAL : Observe the safety and cleanliness recommendations .

1. Tooling

tool	Reference	Designation
 Figure : E5AB0QCT	[0217-C7]	Centraliser
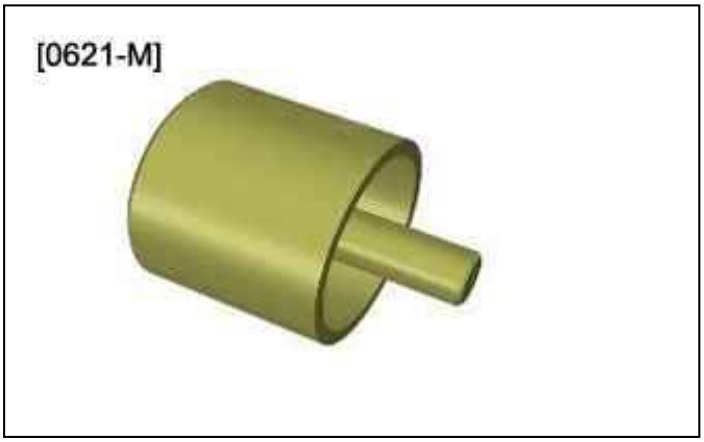 Figure : E5AB0QDT	[0621.M]	fitting mandrel
	[0628-T J1 / 8601-T J1]	fitting mandrel



Figure : E5AB0QFT

2. Removing

Remove : The rear suspension leaf .

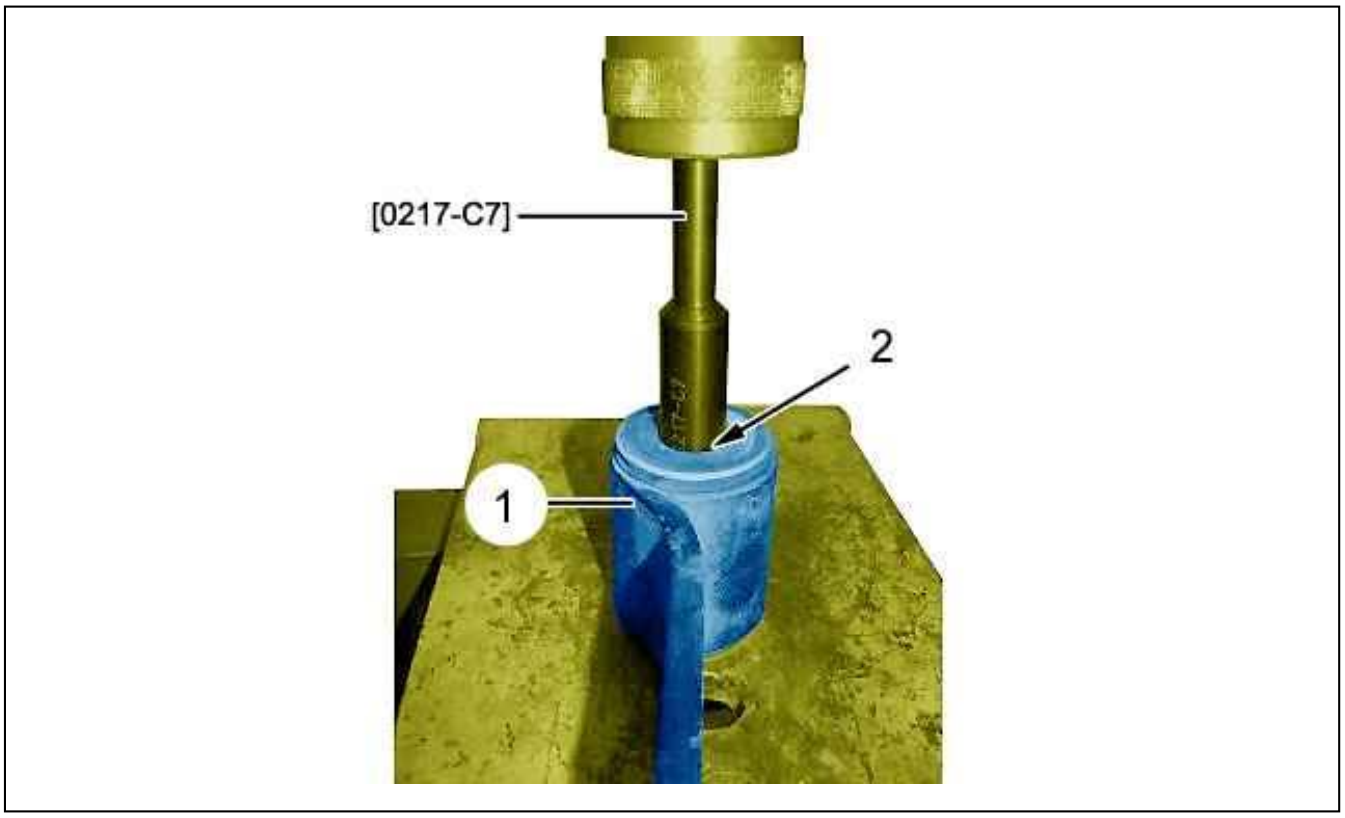

Figure : B3DG0B9D

Place the suspension leaf (1) on a press.
Remove the shaft (2) ; Using a press and tool [0217-C7].

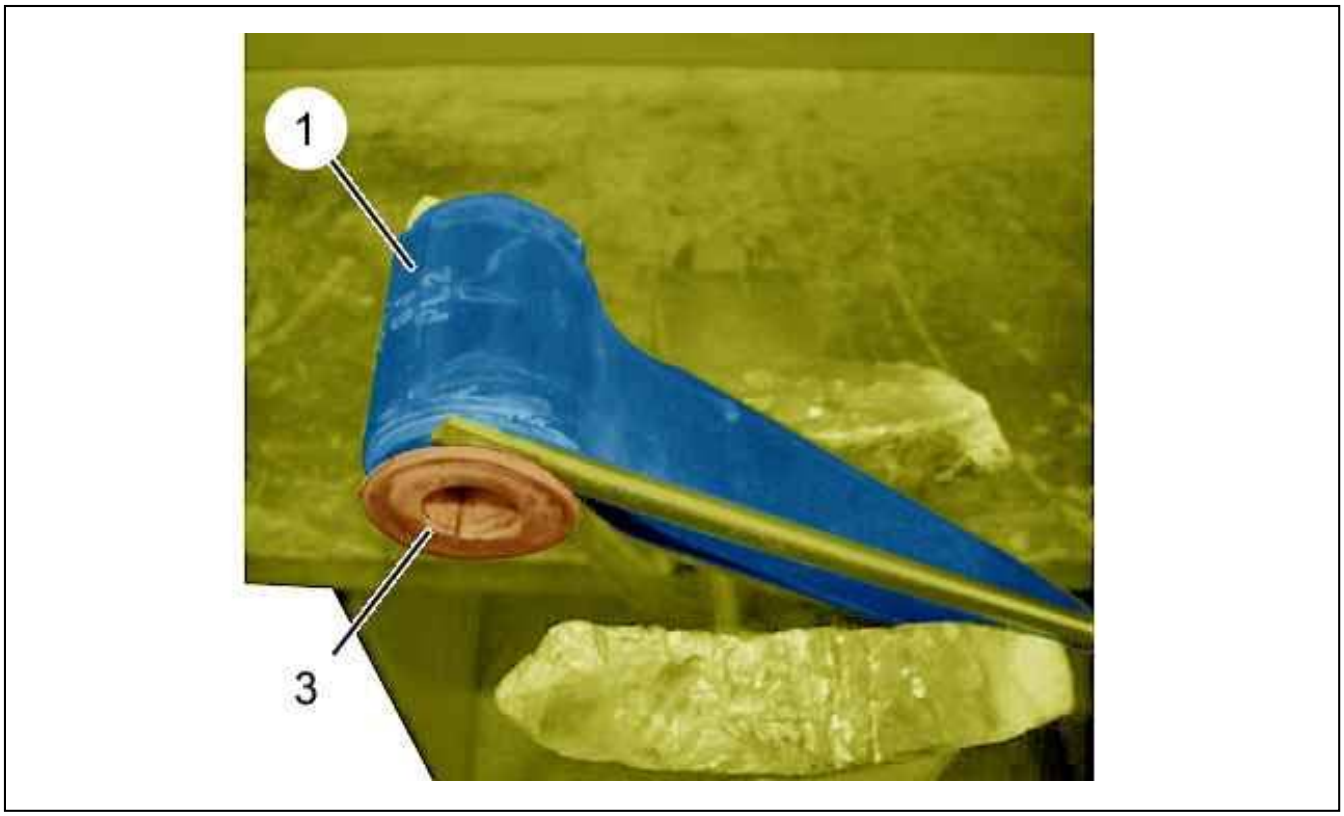

Figure : B3DG0BCD

Secure the suspension leaf (1) in a jaw vice.
Remove the bush (3) ; By means of a screwdriver (each side).

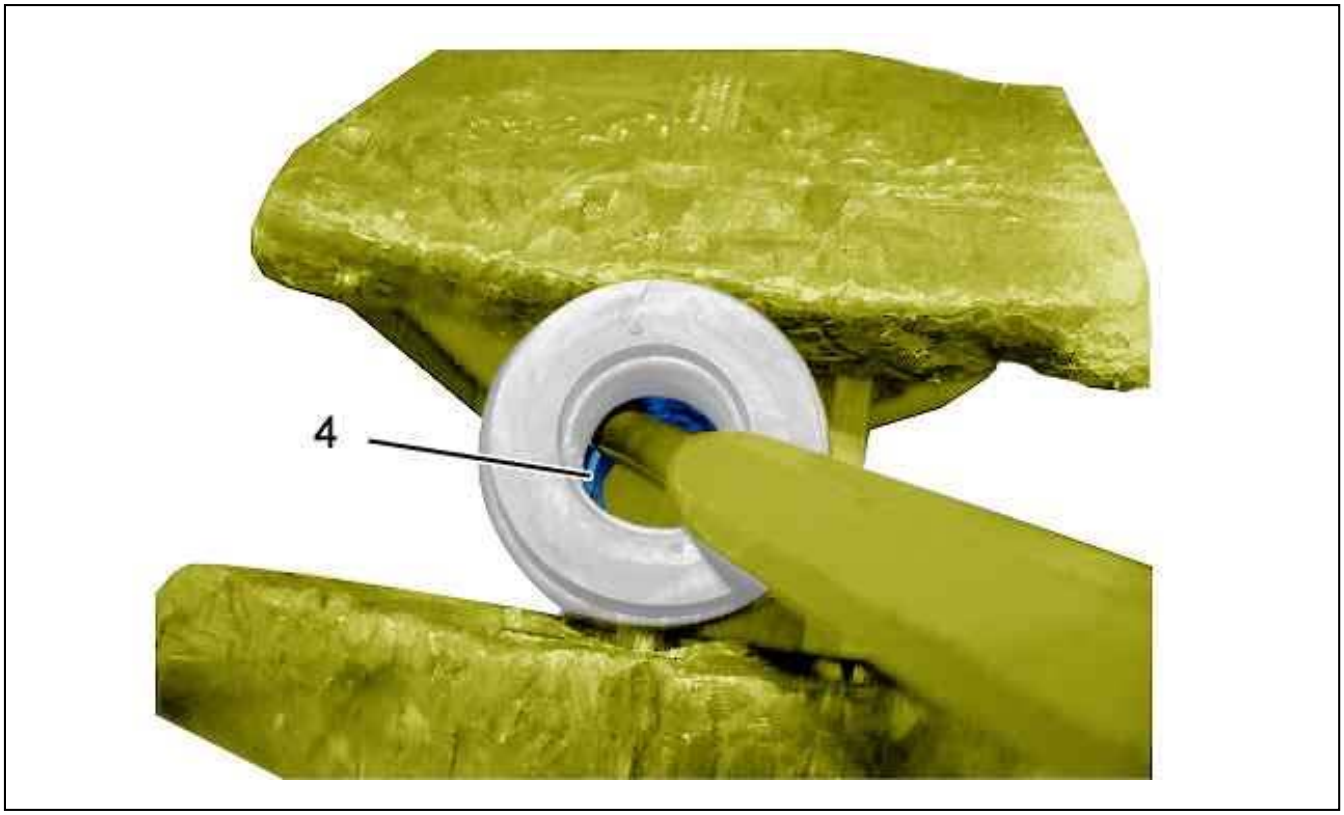

Figure : B3DG0BFD

Remove the rubber bush (4) ; Using a pin drift (each side).

Eliminate all traces of dirt and corrosion from the rubber bush housings.

3. Refitting

Grease : The housings of the flexible bushes (Use tyre grease).

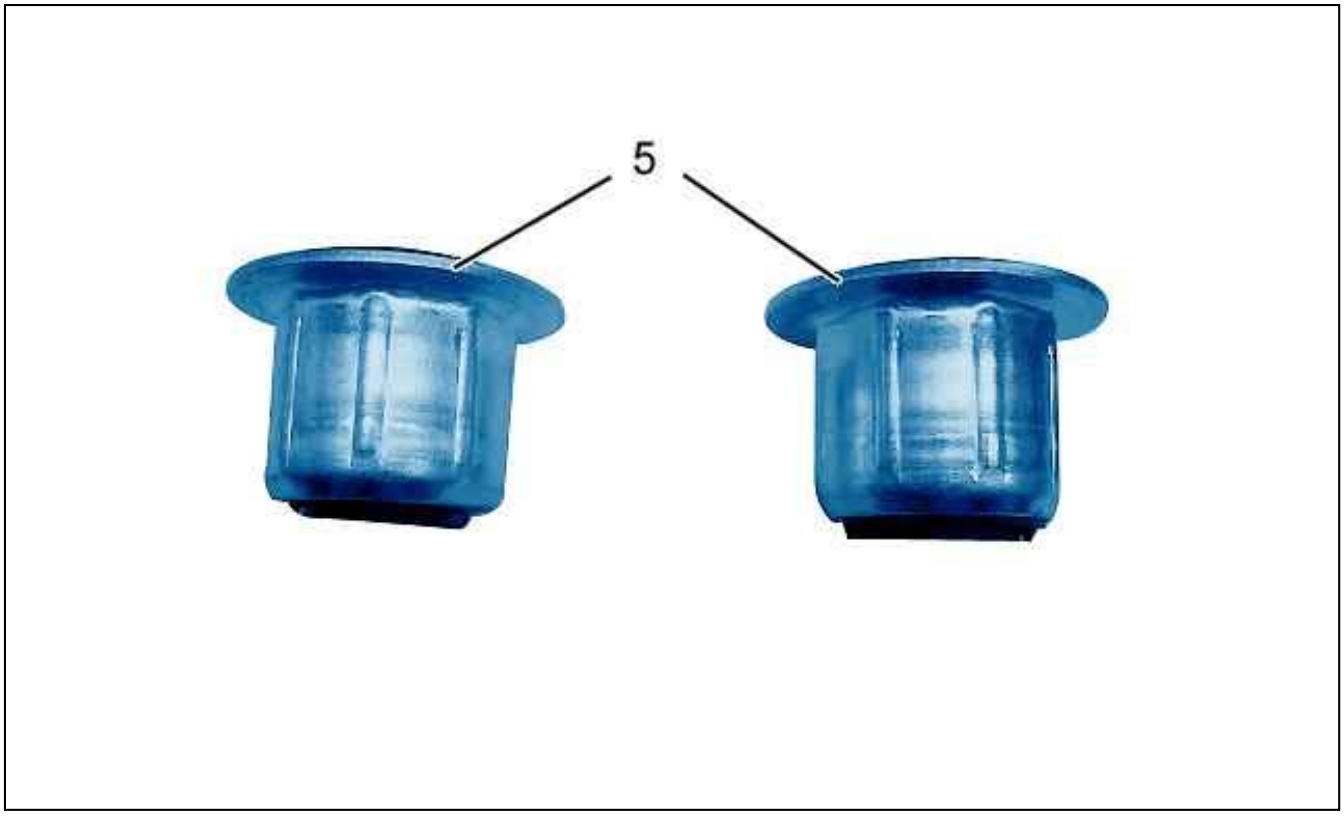

Figure : B3DG0BID

N.B. : The rubber bushes (5) replace the assembly of rubber bushes (4), ring (3) and shaft (2).

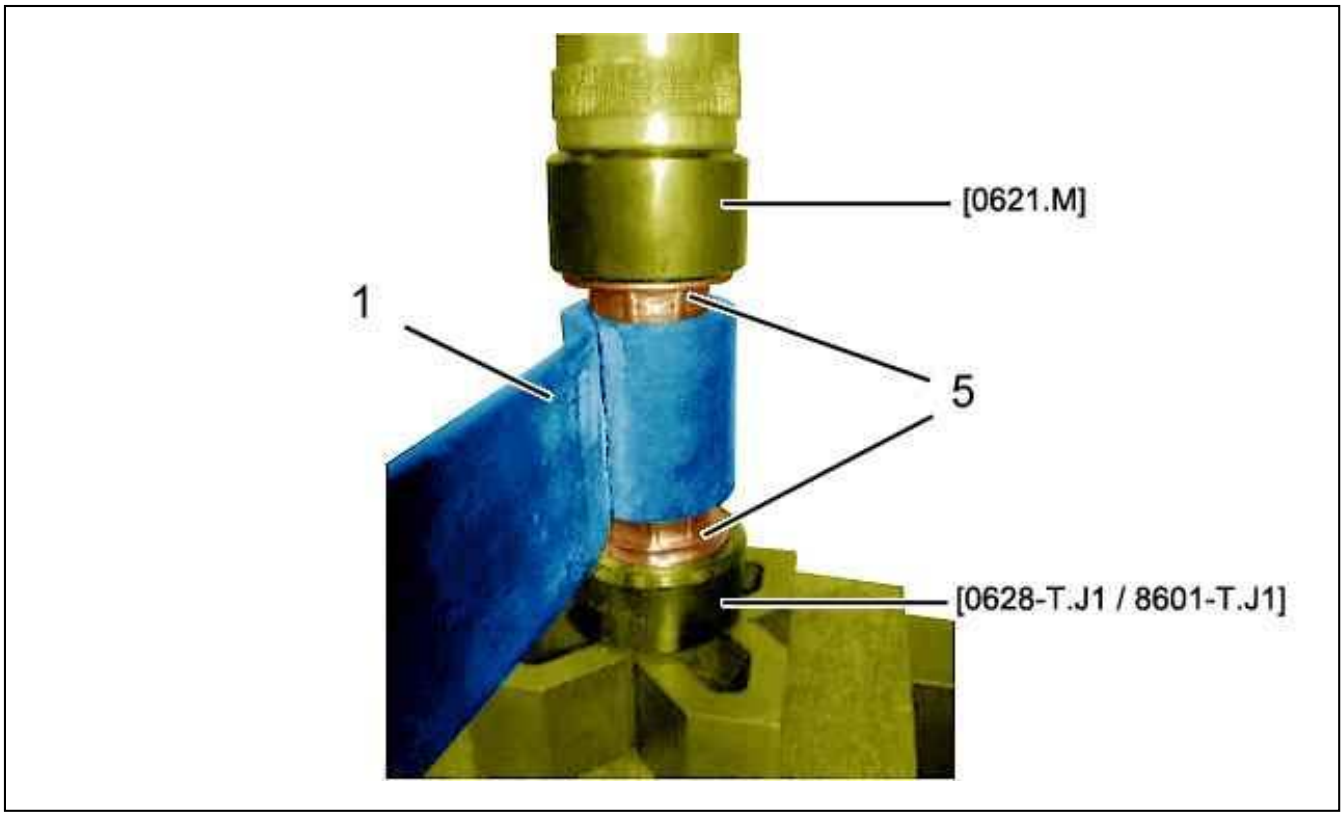

Figure : B3DG0BLD

Position :

- The tool [0628-T.J1 / 8601-T.J1]
- One of the rubber bushes (5) on the tool [0628-T.J1 / 8601-T.J1]
- The suspension leaf (1)
- The other rubber bush (5)
- The tool [0621.M]

Force-fit the rubber bushes (5) in as far as they will go.

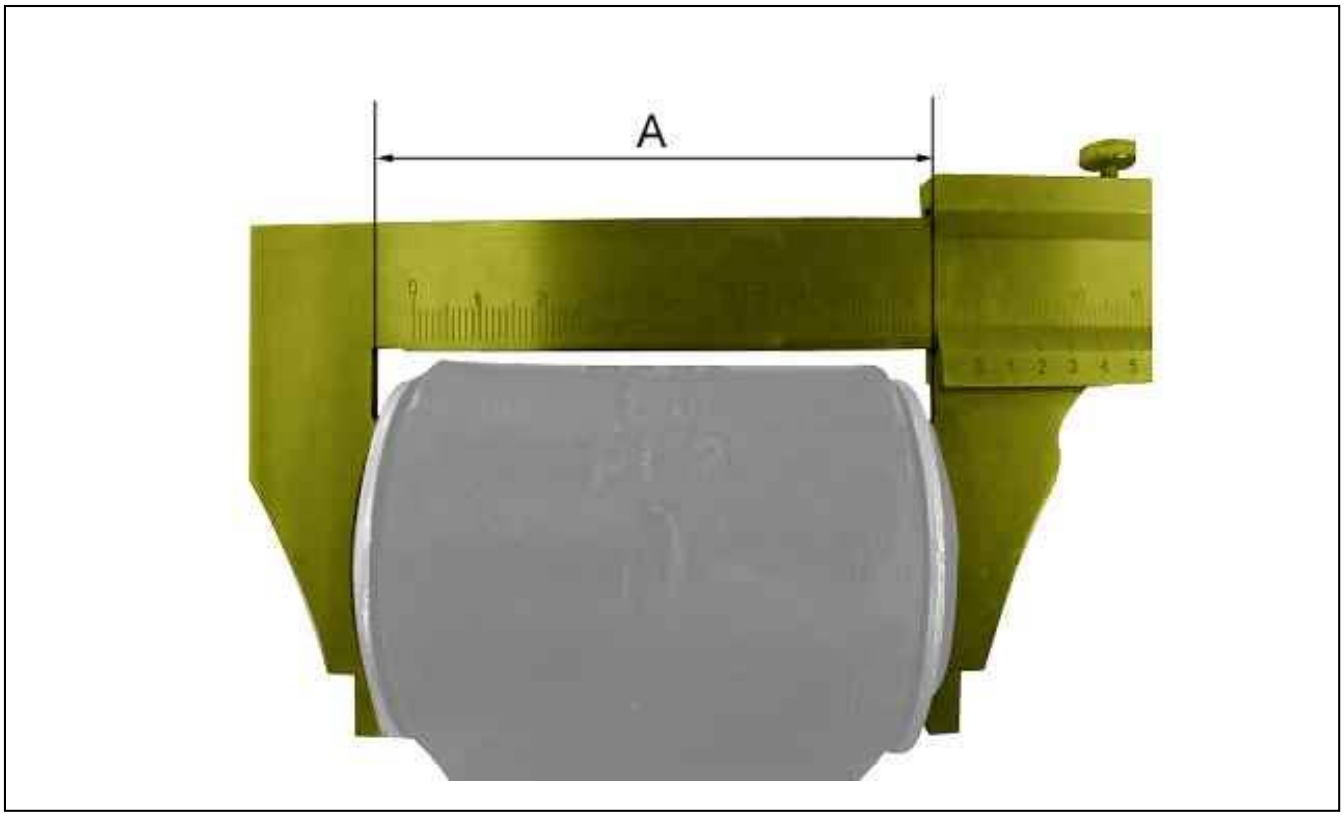

Figure : B3DG0BOD

Check the overall width "A" : 83 + 0 / -0,2 mm.

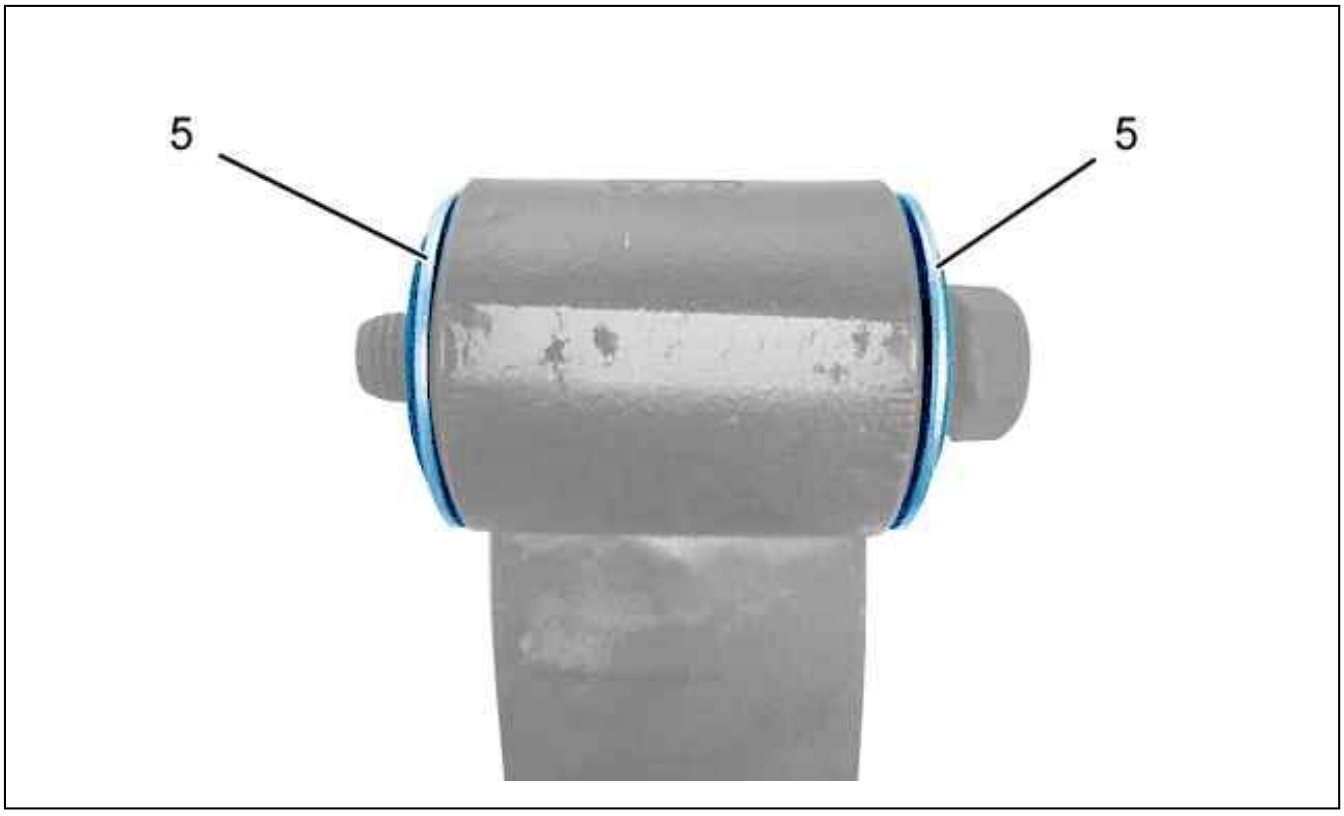

Figure : B3DG0BRD

Check the alignment of the rubber bushes (5) ; Using a pin 16 mm in diameter.
Refit : The rear suspension leaf .

REMOVING - REFITTING : SUSPENSION BLADE REAR FLEXIBLE MOUNTINGS

ESSENTIAL : Observe the safety and cleanliness recommendations .

1. Tooling

tool	Reference	Designation
 Figure : E5AB0QCT	[0217-C7]	Centraliser
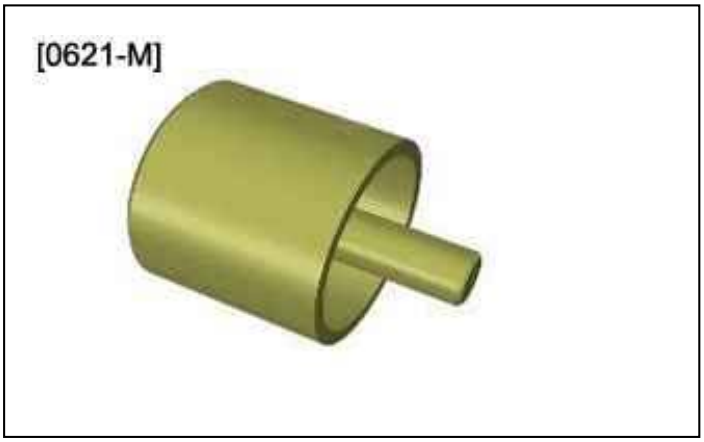 Figure : E5AB0QDT	[0621.M]	fitting mandrel
	[0628-T J1 / 8601-T J1]	fitting mandrel



Figure : E5AB0QFT

2. Removing

Remove : The rear suspension leaf .

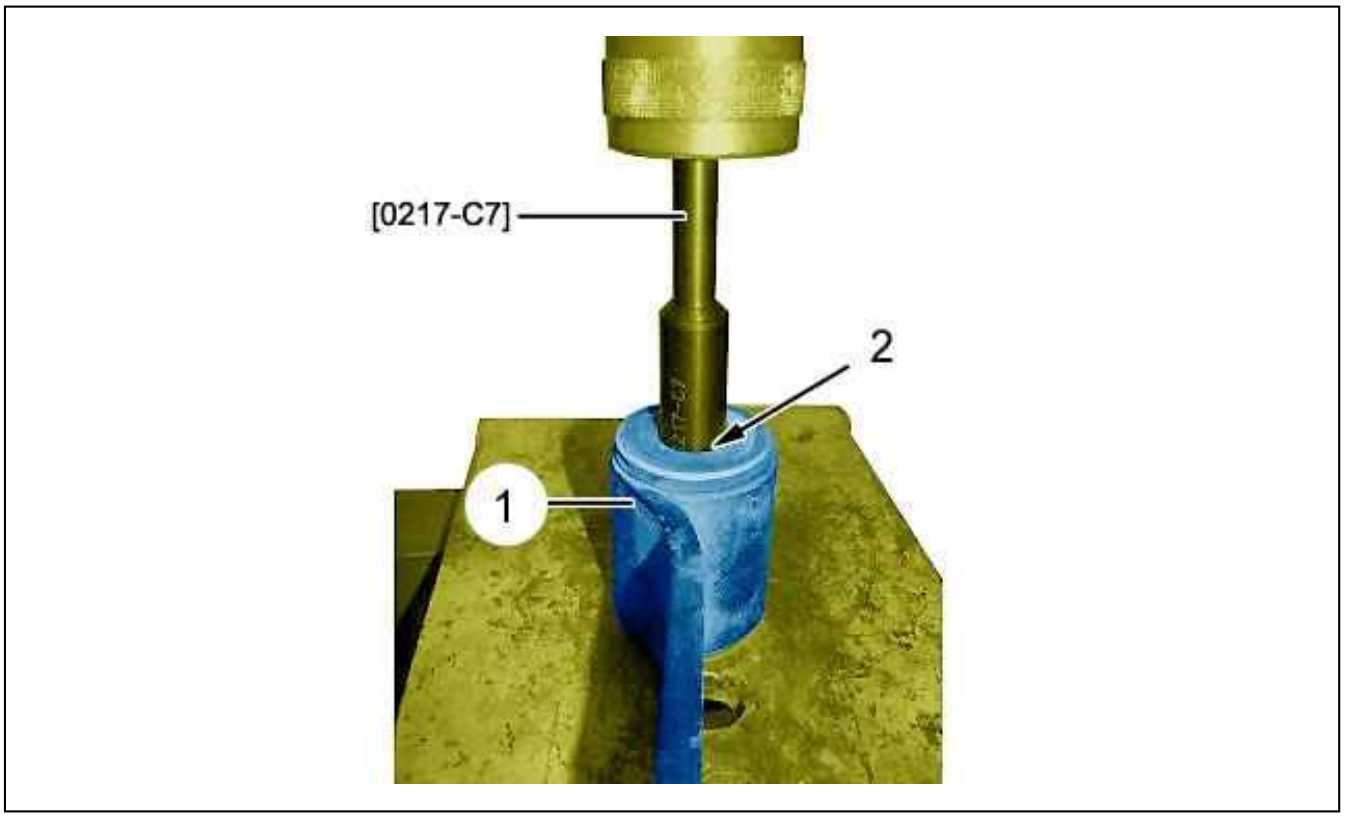

Figure : B3DG0B9D

Place the suspension leaf (1) on a press.
Remove the shaft (2) ; Using a press and tool [0217-C7].

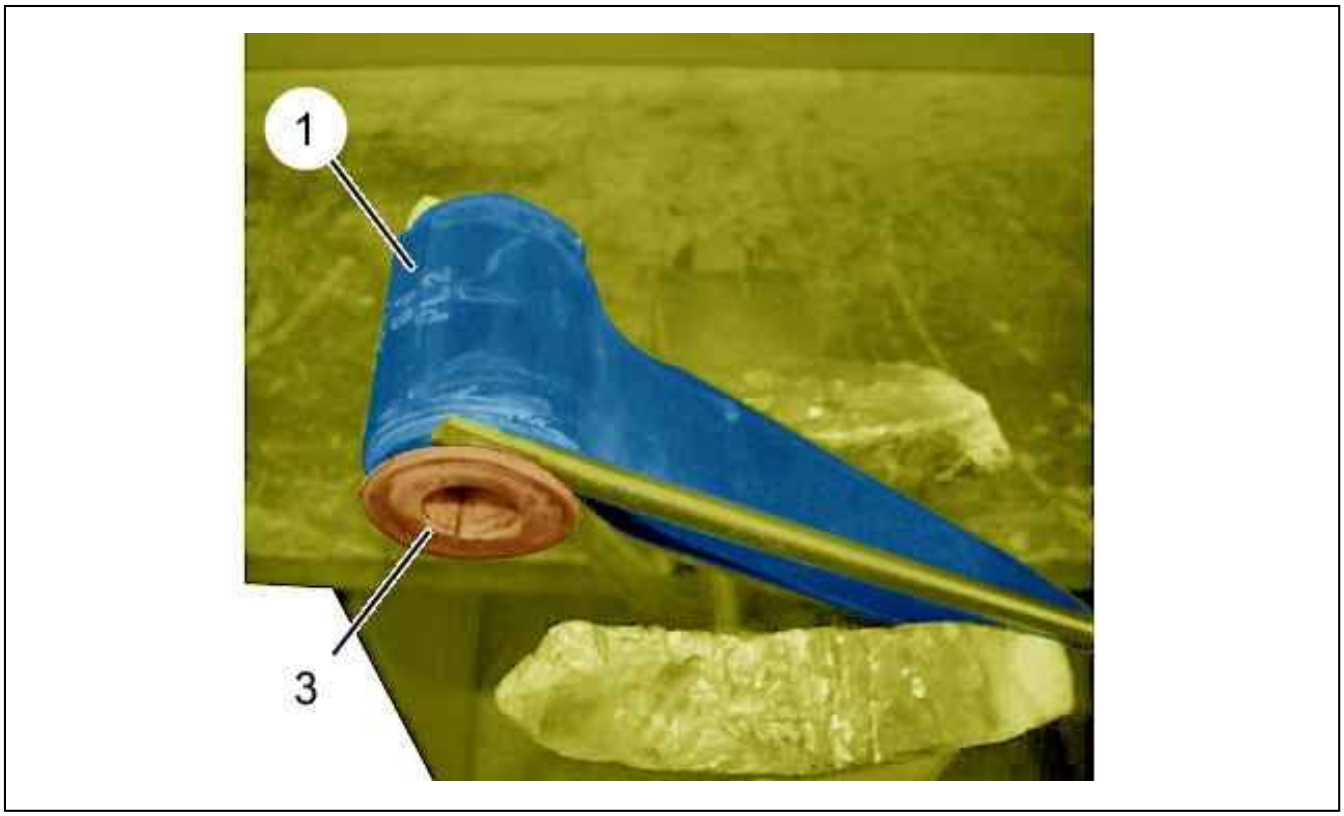

Figure : B3DG0BCD

Secure the suspension leaf (1) in a jaw vice.
Remove the bush (3) ; By means of a screwdriver (each side).

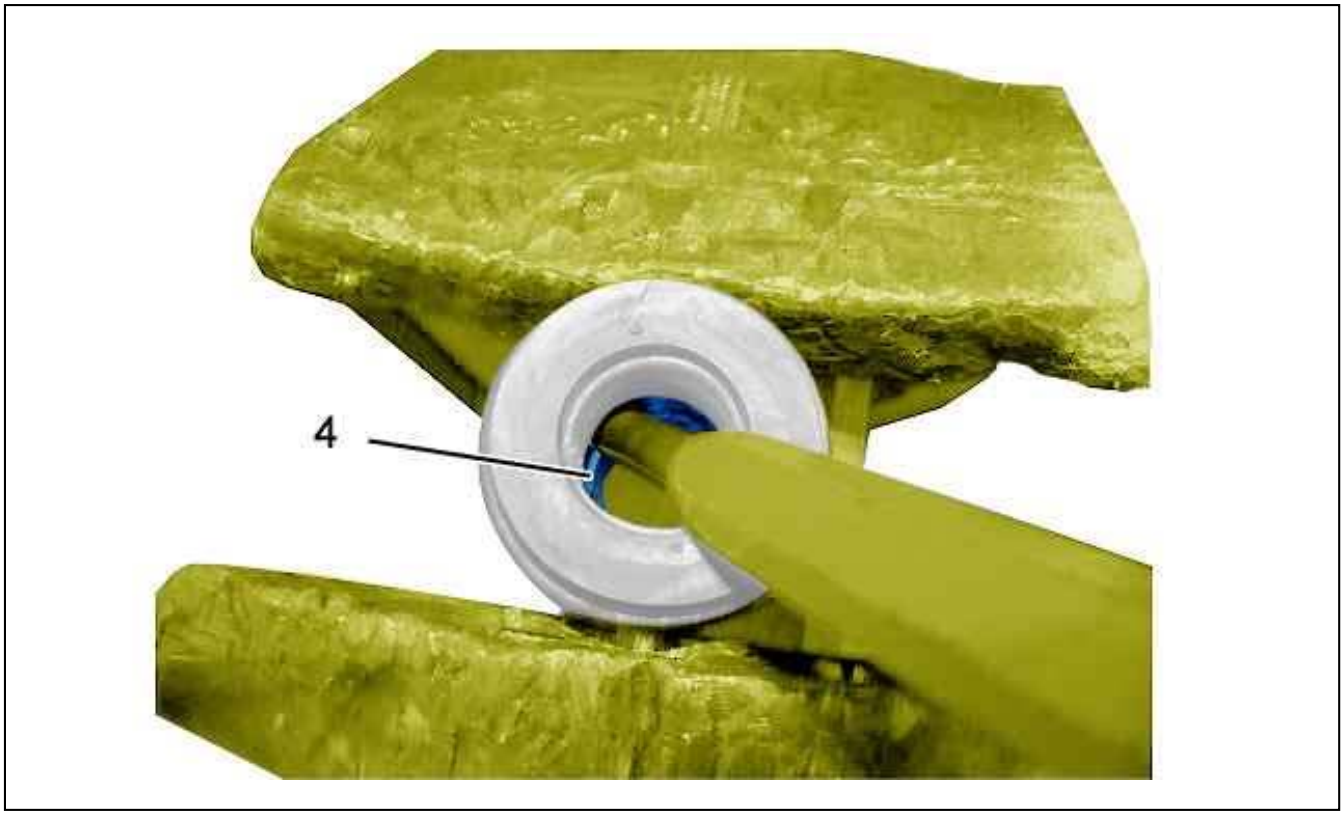

Figure : B3DG0BFD

Remove the rubber bush (4) ; Using a pin drift (each side).

Eliminate all traces of dirt and corrosion from the rubber bush housings.

3. Refitting

Grease : The housings of the flexible bushes (Use tyre grease).

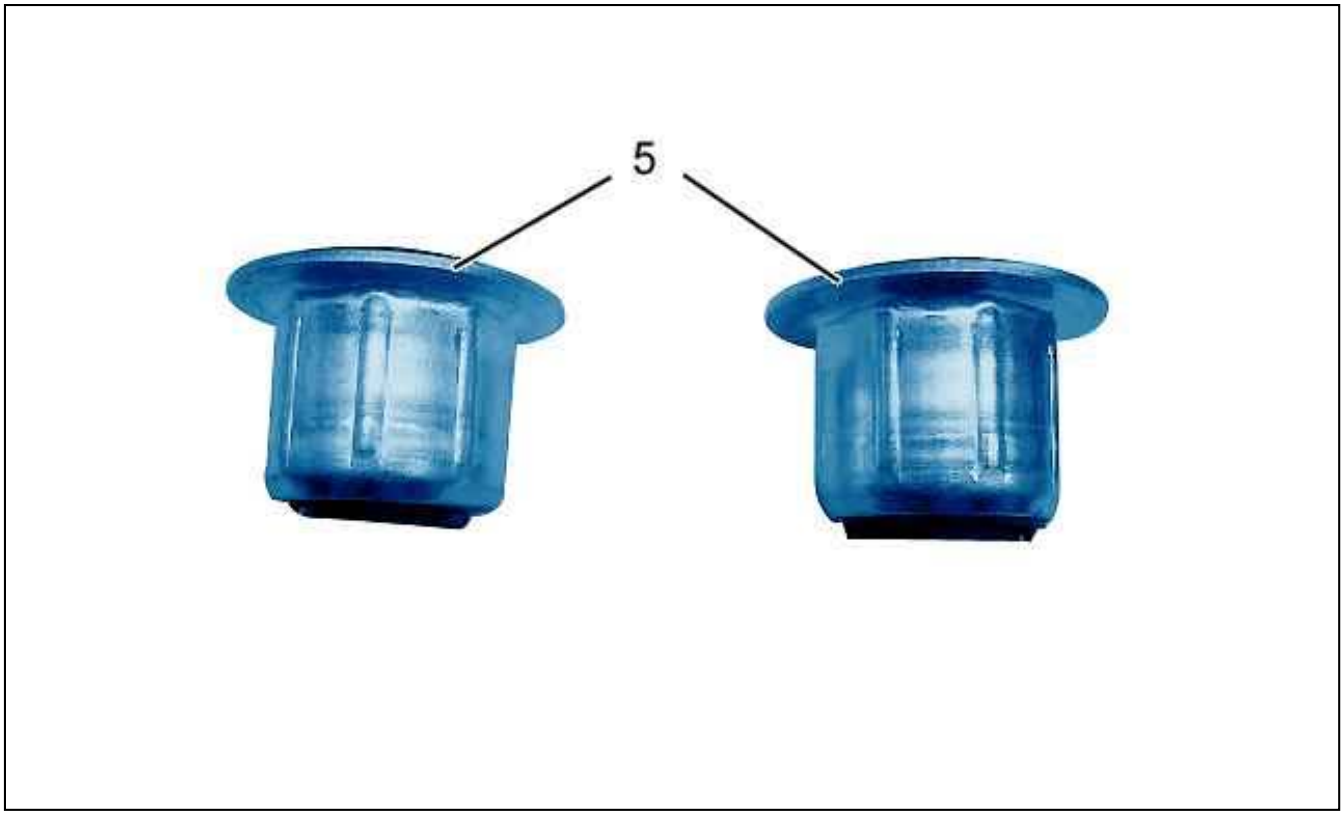

Figure : B3DG0BID

N.B. : The rubber bushes (5) replace the assembly of rubber bushes (4), ring (3) and shaft (2).

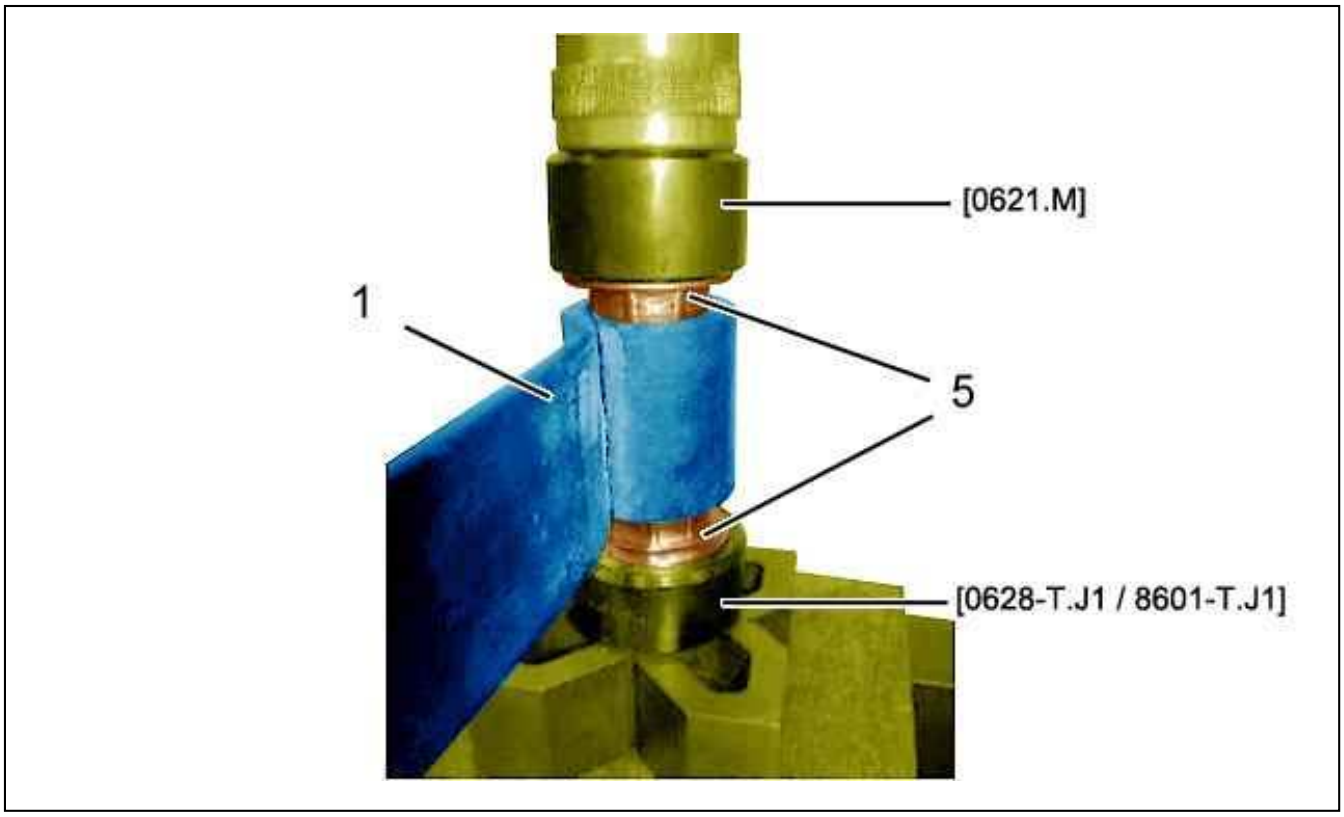

Figure : B3DG0BLD

Position :

- The tool [0628-T.J1 / 8601-T.J1]
- One of the rubber bushes (5) on the tool [0628-T.J1 / 8601-T.J1]
- The suspension leaf (1)
- The other rubber bush (5)
- The tool [0621.M]

Force-fit the rubber bushes (5) in as far as they will go.

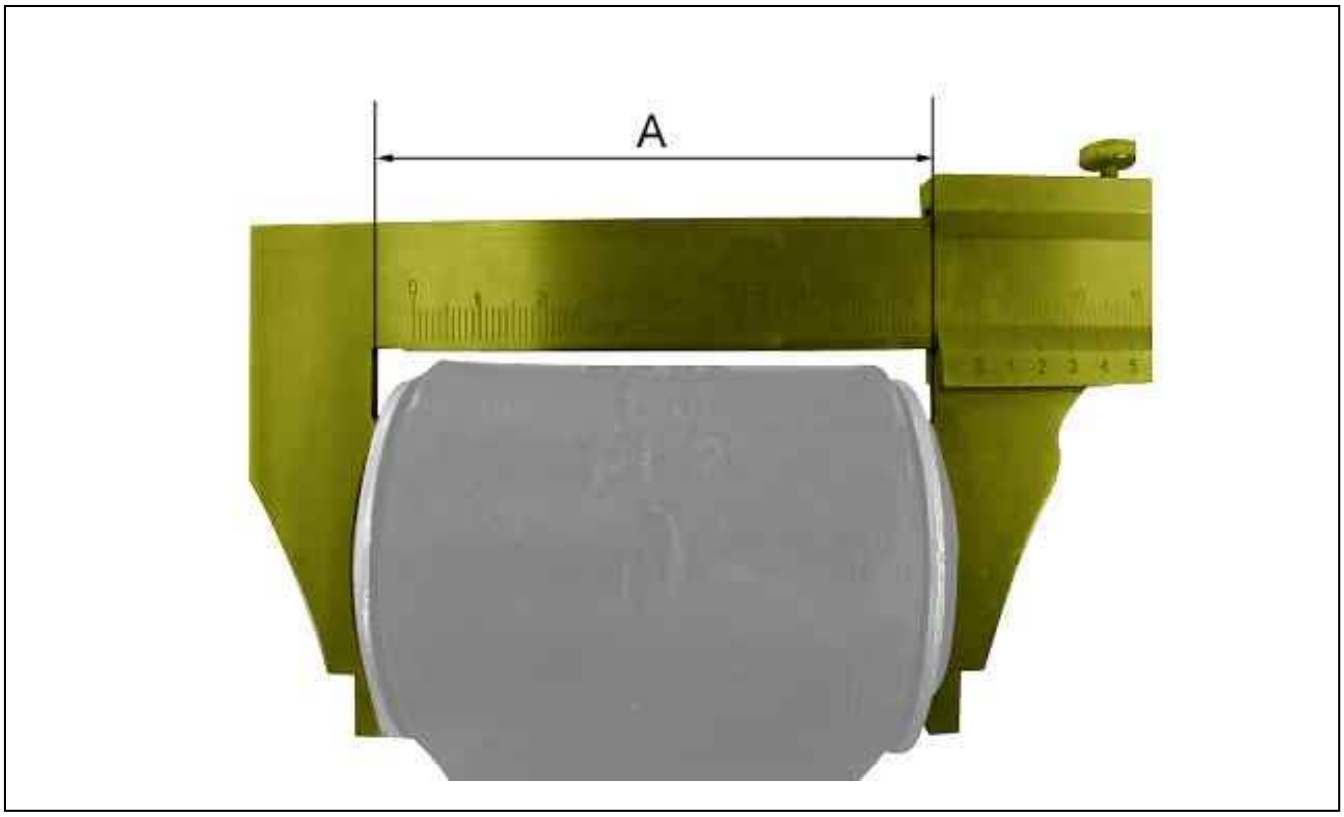

Figure : B3DG0BOD

Check the overall width "A" : 83 + 0 / -0,2 mm.

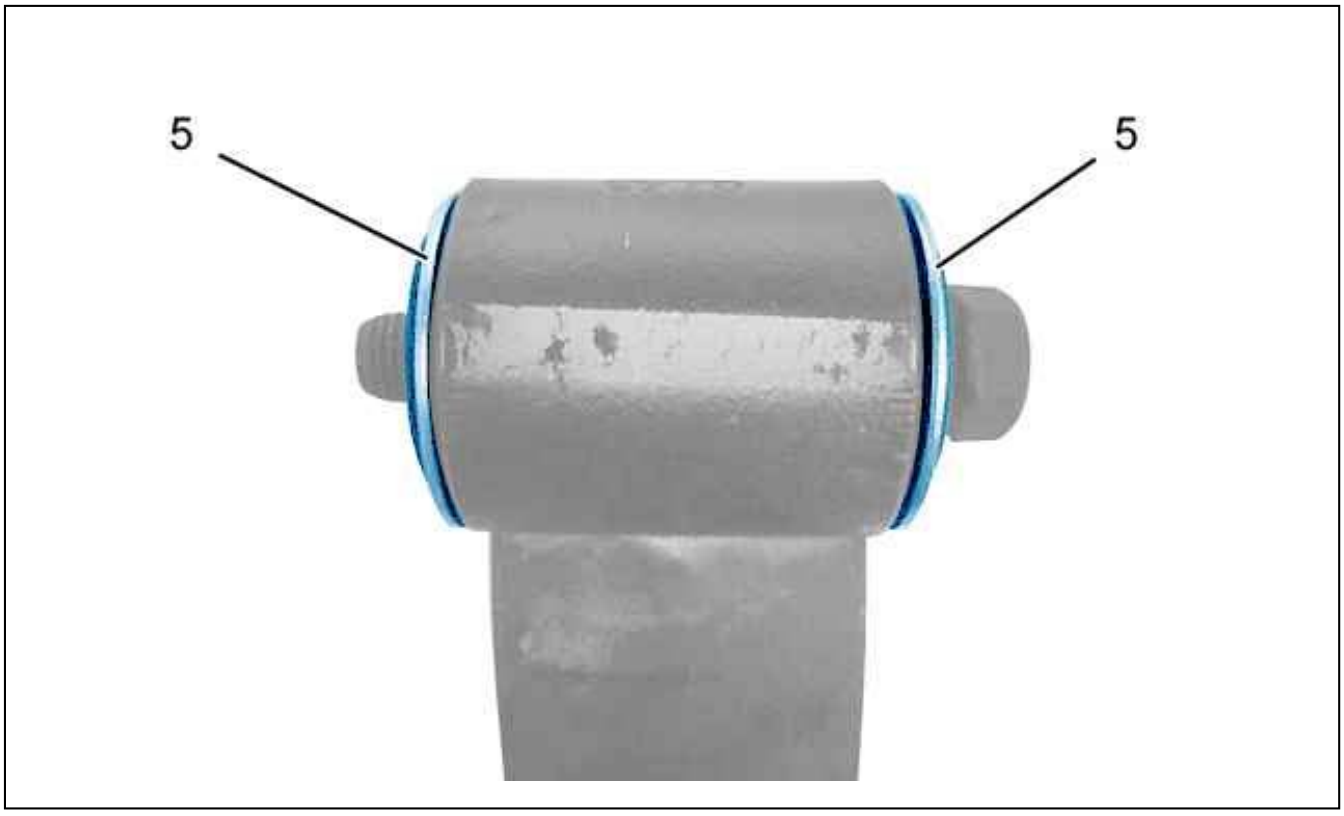

Figure : B3DG0BRD

Check the alignment of the rubber bushes (5) ; Using a pin 16 mm in diameter.
Refit : The rear suspension leaf .

REMOVING - REFITTING : SUSPENSION BLADE REAR FLEXIBLE MOUNTINGS

ESSENTIAL : Observe the safety and cleanliness recommendations .

1. Tooling

tool	Reference	Designation
 Figure : E5AB0QCT	[0217-C7]	Centraliser
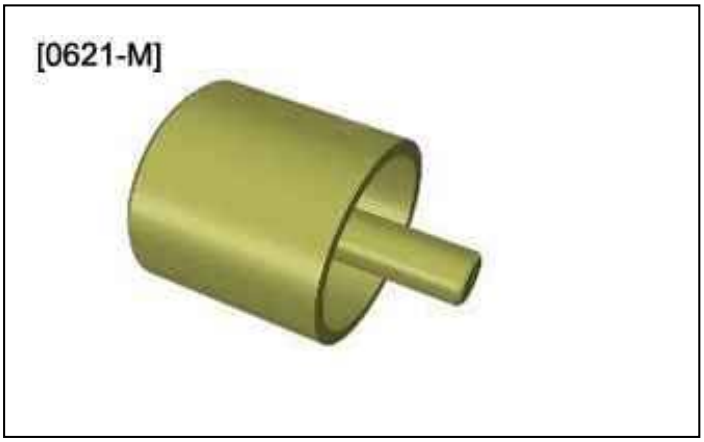 Figure : E5AB0QDT	[0621.M]	fitting mandrel
	[0628-T J1 / 8601-T J1]	fitting mandrel



Figure : E5AB0QFT

2. Removing

Remove : The rear suspension leaf .

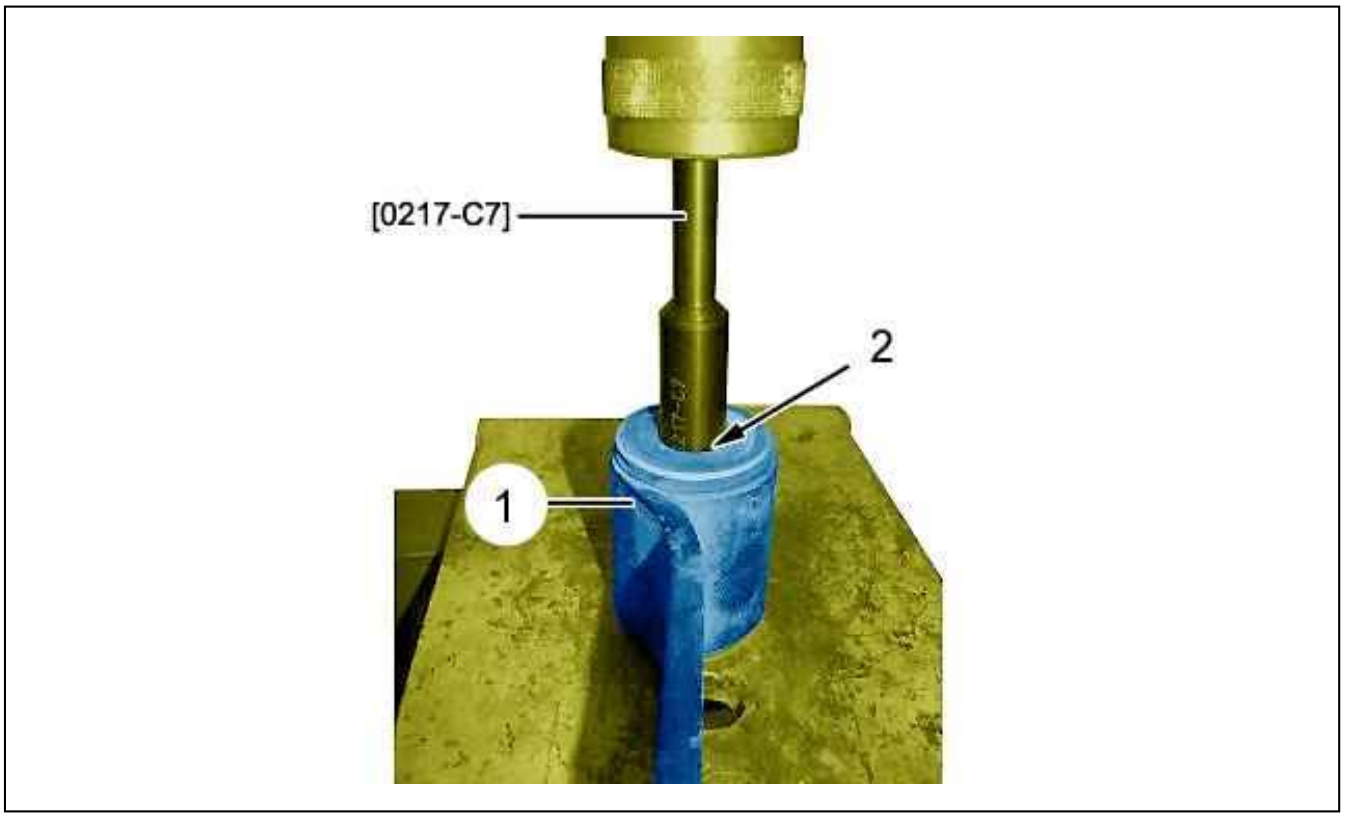

Figure : B3DG0B9D

Place the suspension leaf (1) on a press.
Remove the shaft (2) ; Using a press and tool [0217-C7].

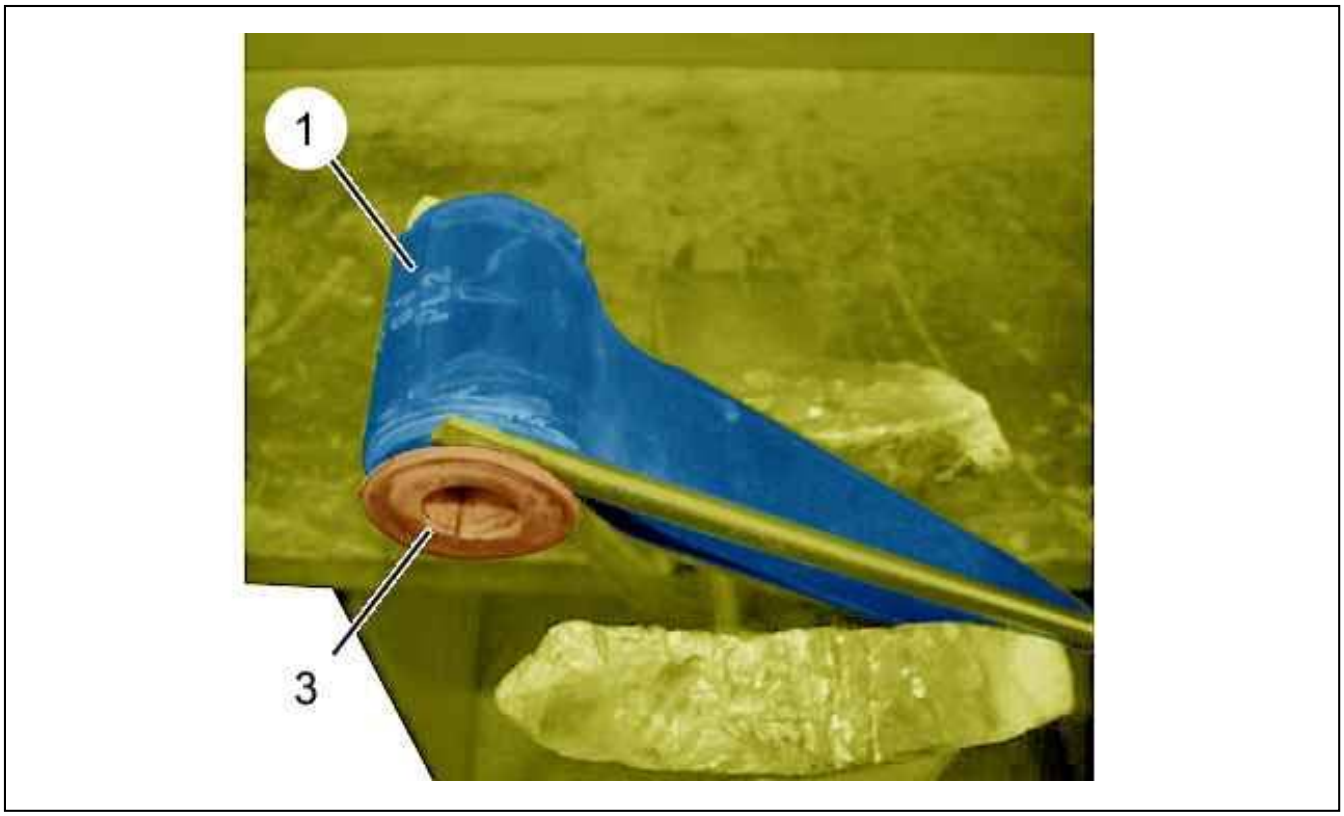

Figure : B3DG0BCD

Secure the suspension leaf (1) in a jaw vice.
Remove the bush (3) ; By means of a screwdriver (each side).

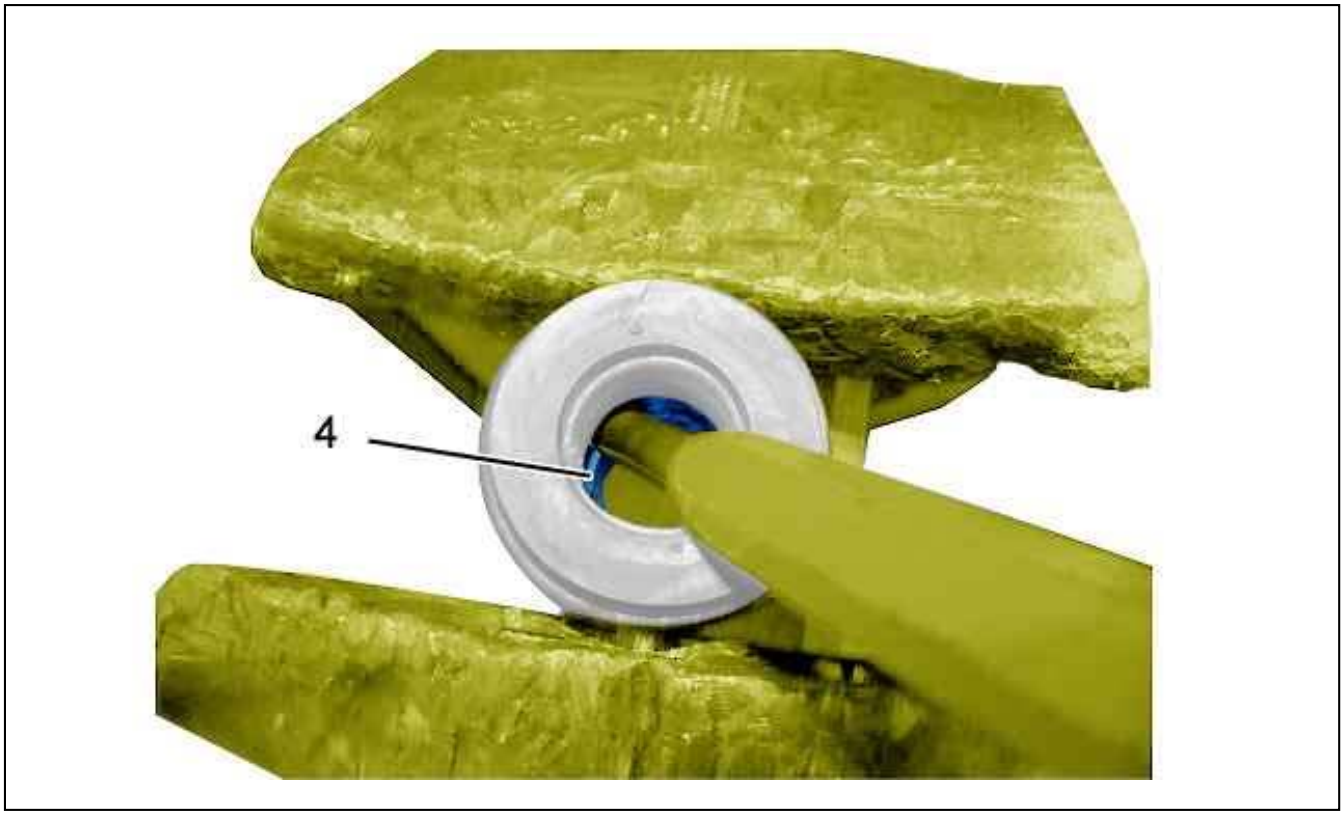

Figure : B3DG0BFD

Remove the rubber bush (4) ; Using a pin drift (each side).

Eliminate all traces of dirt and corrosion from the rubber bush housings.

3. Refitting

Grease : The housings of the flexible bushes (Use tyre grease).

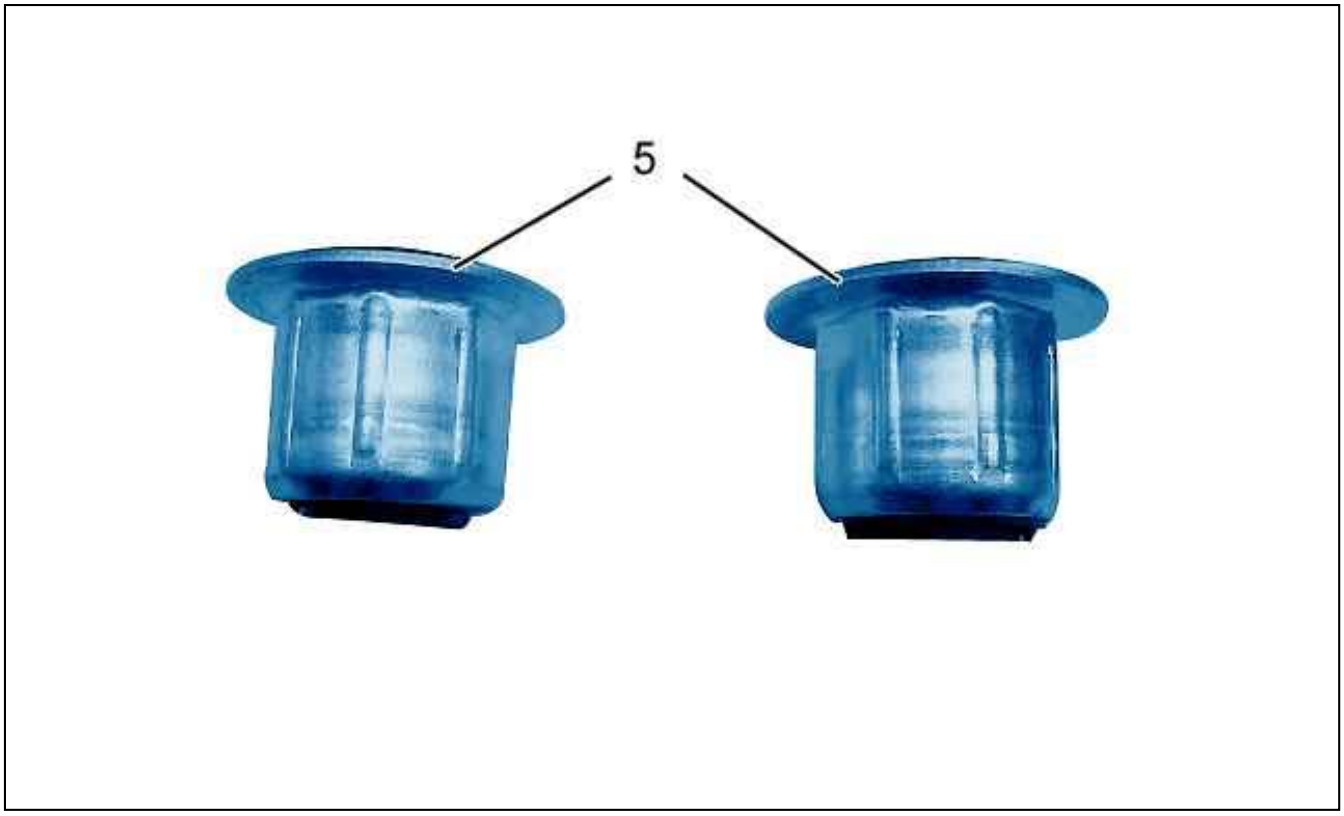

Figure : B3DG0BID

N.B. : The rubber bushes (5) replace the assembly of rubber bushes (4), ring (3) and shaft (2).

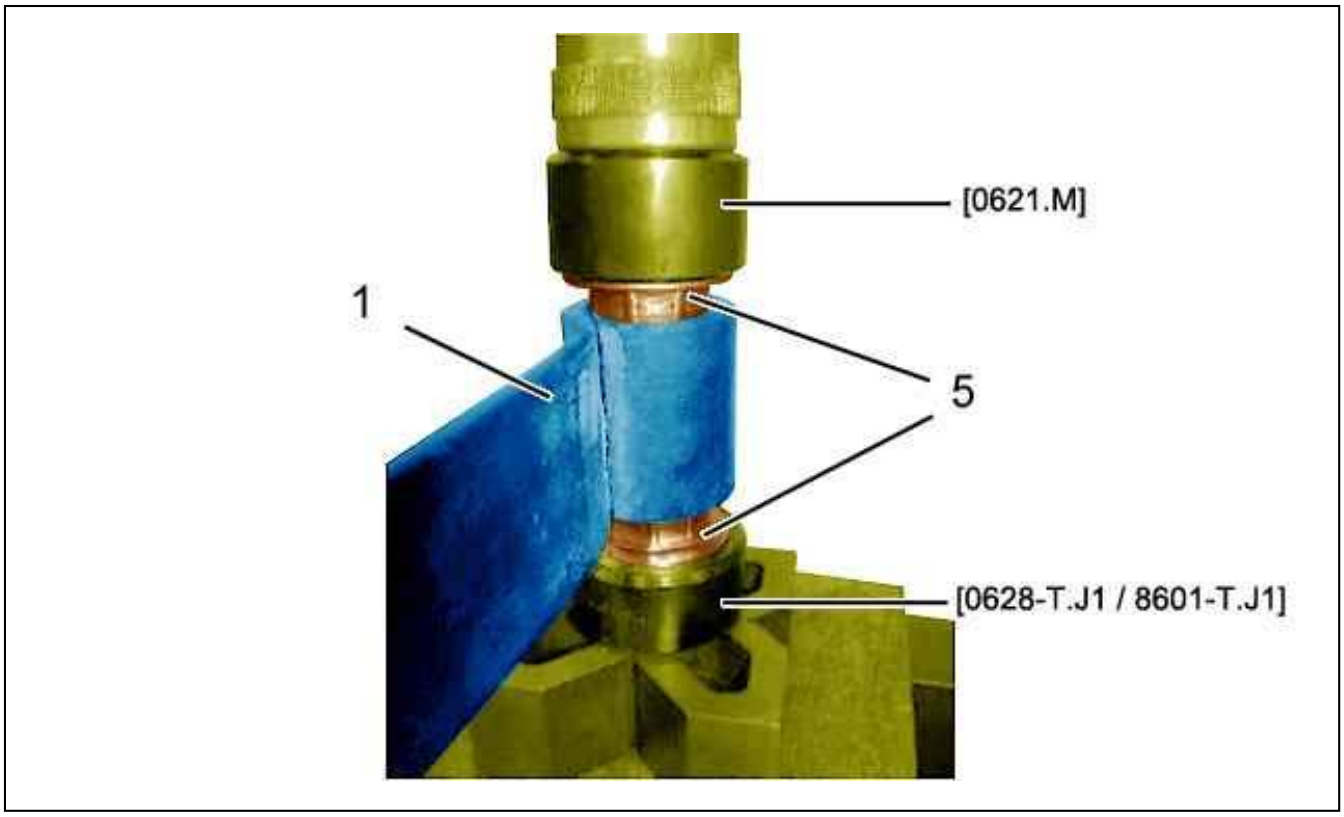

Figure : B3DG0BLD

Position :

- The tool [0628-T.J1 / 8601-T.J1]
- One of the rubber bushes (5) on the tool [0628-T.J1 / 8601-T.J1]
- The suspension leaf (1)
- The other rubber bush (5)
- The tool [0621.M]

Force-fit the rubber bushes (5) in as far as they will go.

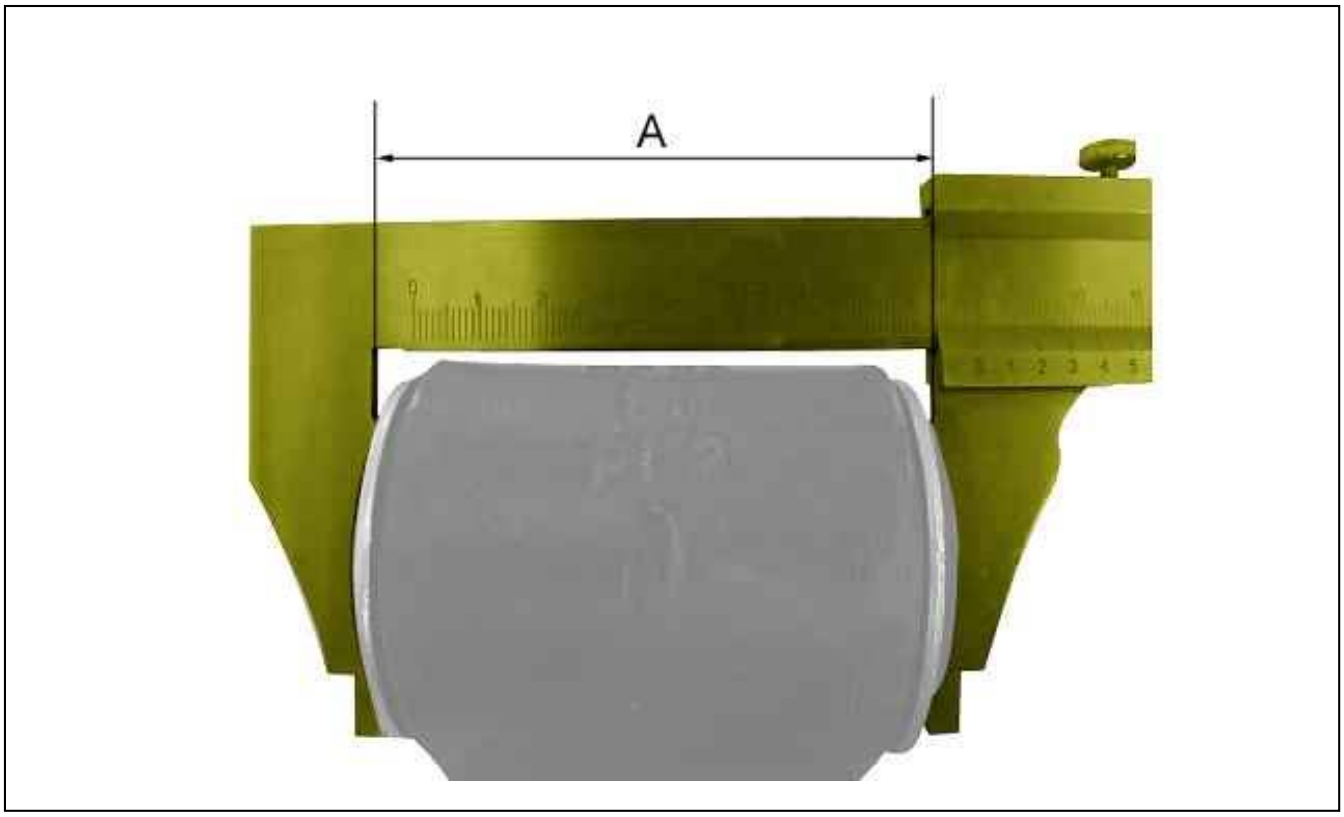

Figure : B3DG0BOD

Check the overall width "A" : 83 + 0 / -0,2 mm.

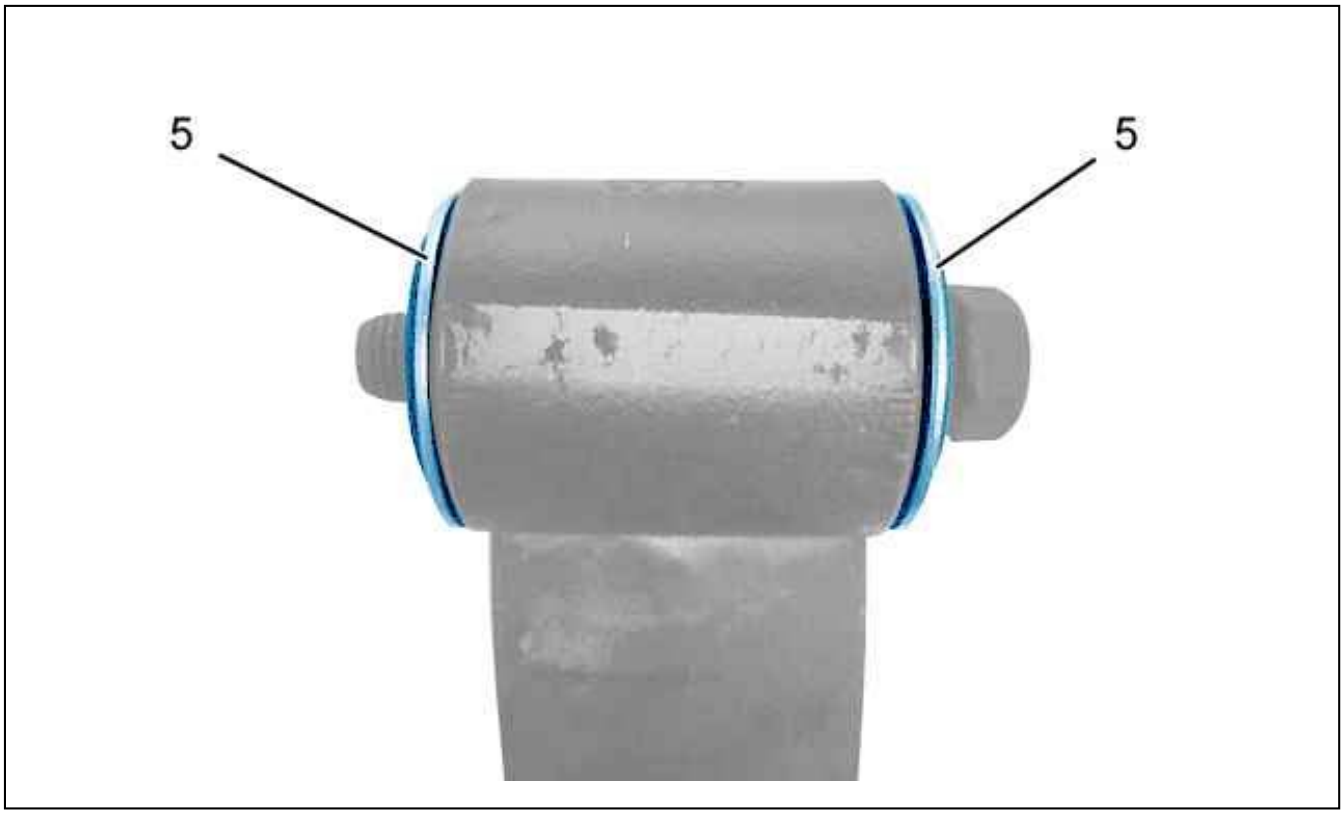

Figure : B3DG0BRD

Check the alignment of the rubber bushes (5) ; Using a pin 16 mm in diameter.
Refit : The rear suspension leaf .

REMOVING - REFITTING : REAR SUSPENSION

1. Recommended tools

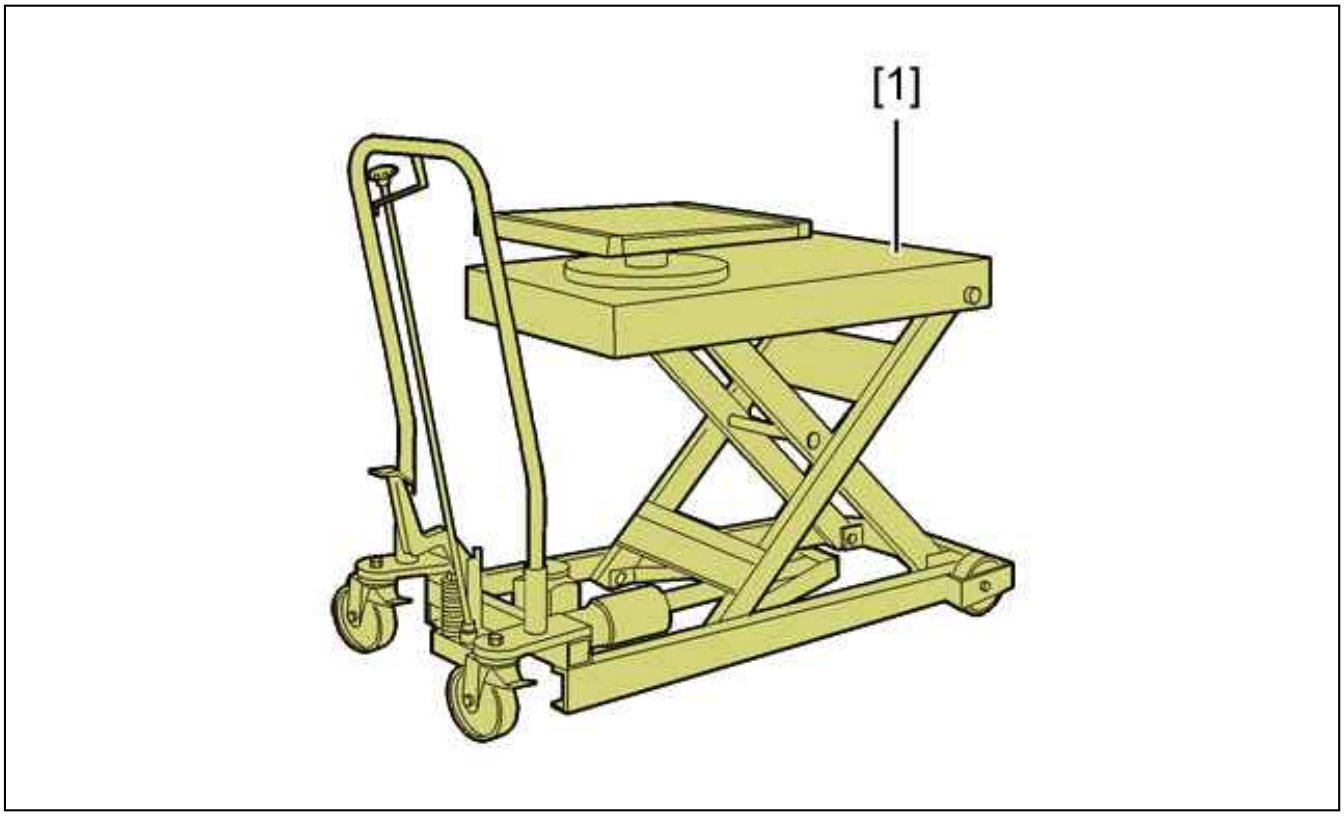

Figure : E5AP2XSD

Reference	Designation	Reference	Reference
[1]	lifting bench	5702-T.A	(-).0004

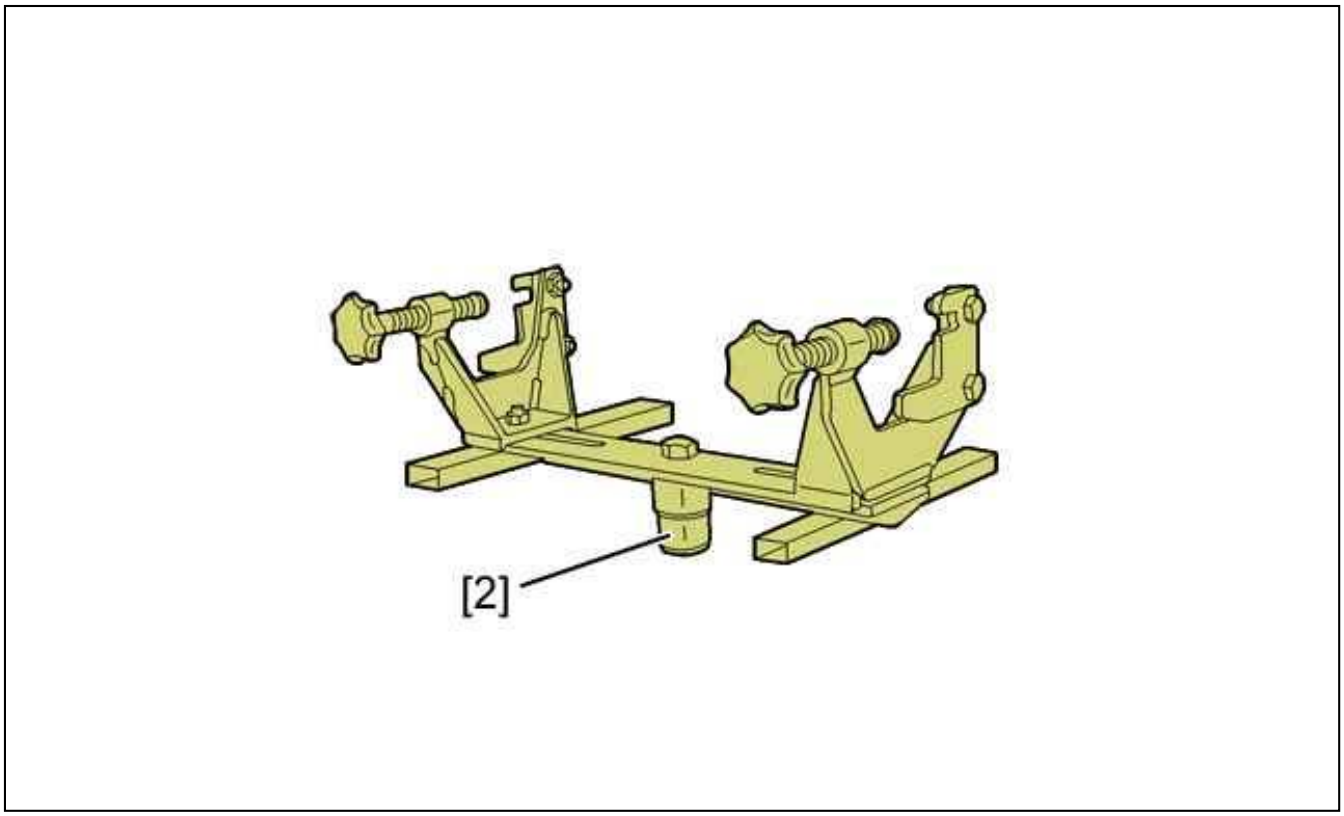

Figure : E5AP2XTD

Reference	Designation	Reference	Reference
[2]	Bracket for removal/refitting of mechanical components	5713-T	(-).0008

2. Removing

To facilitate access ; Remove the spare wheel.
Disconnect the battery negative terminal.
Untighten the rear wheel bolts.

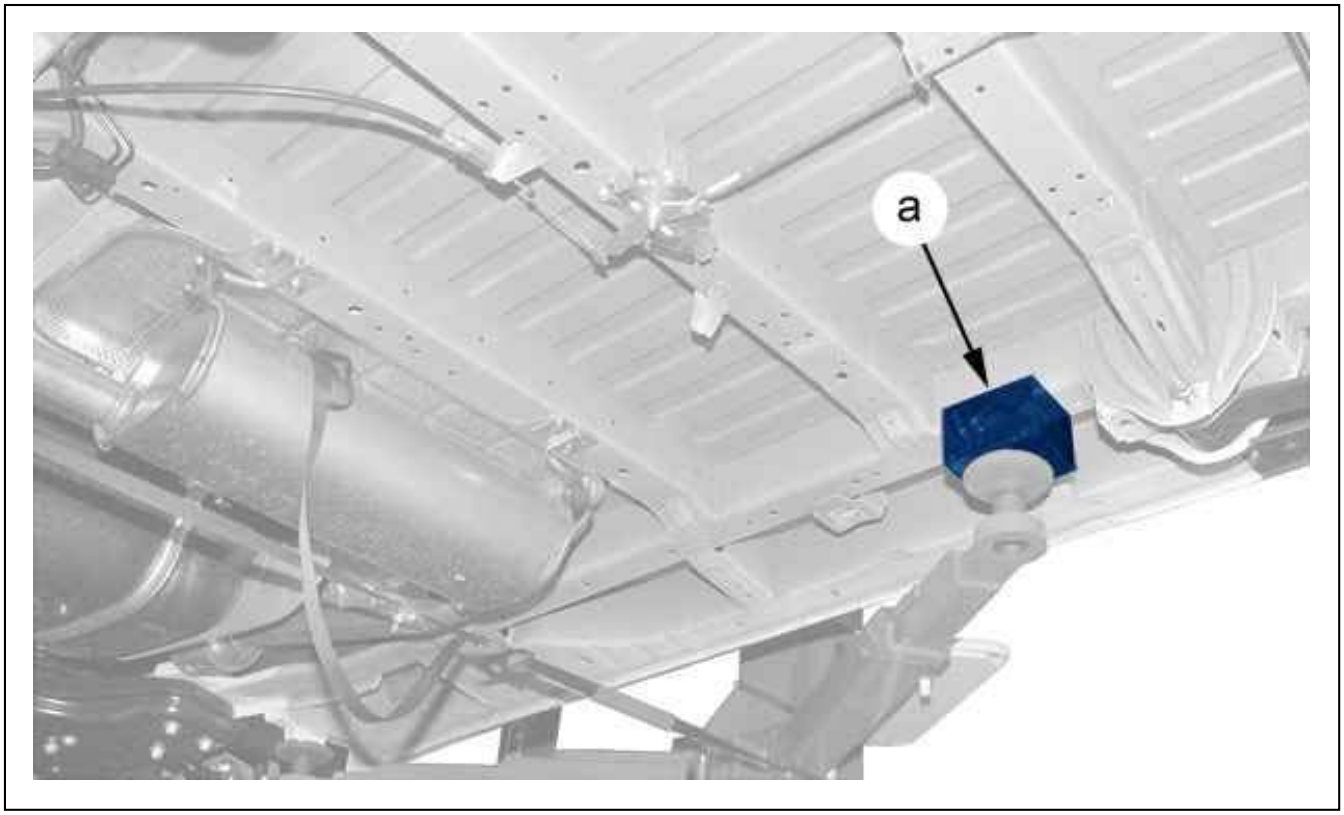

Figure : B3DP0DFD

ESSENTIAL : When raising and jacking up the vehicle, place the rubber pads of the lift under the body reinforcements at "a".

Raise and support the vehicle, with the rear wheels hanging free.
Remove the rear wheels.

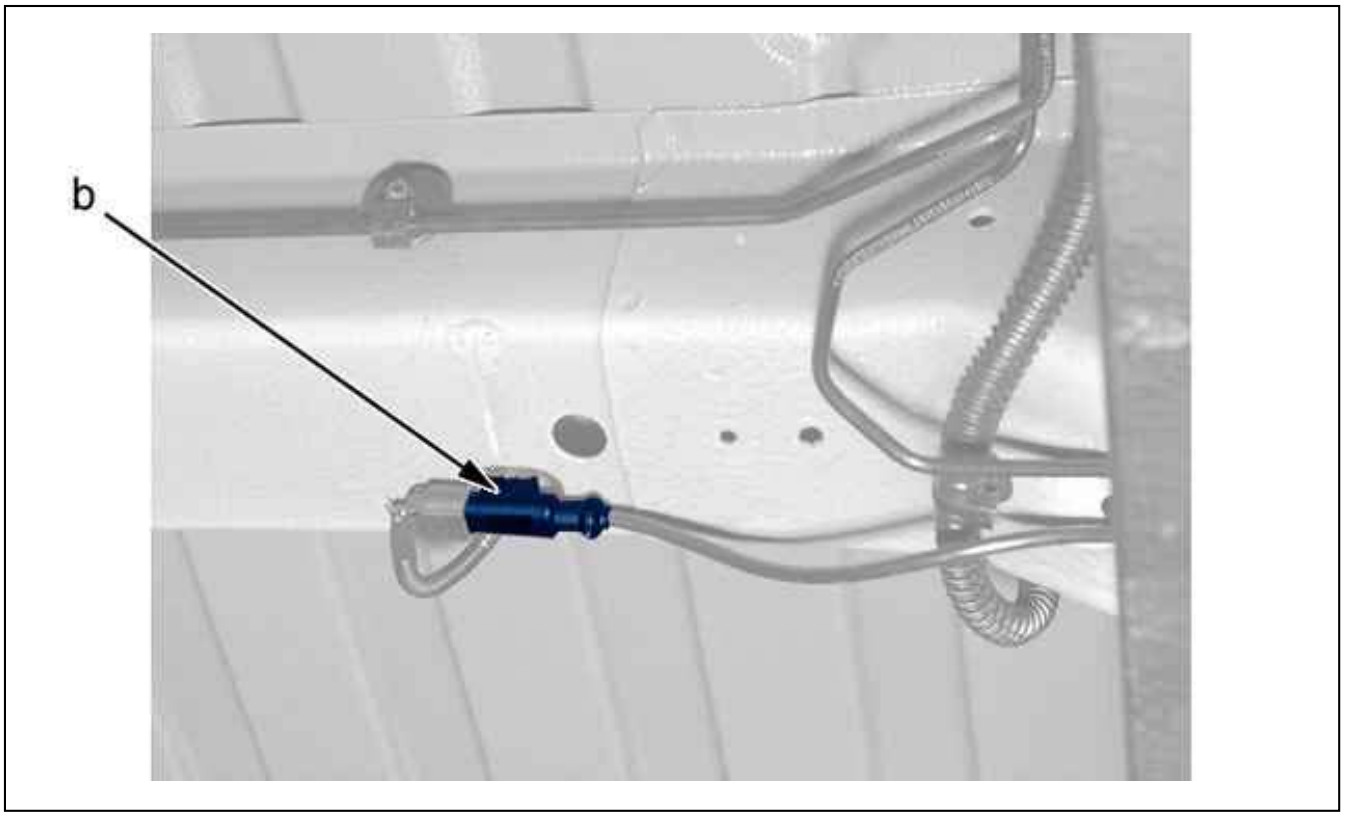

Figure : B3DP0DGD

each side :

- Disconnect the wheel sensor connector (at "b")
- Unclip electrical harness ABS from the bodyshell

Remove the brake pads (see the relevant operation).

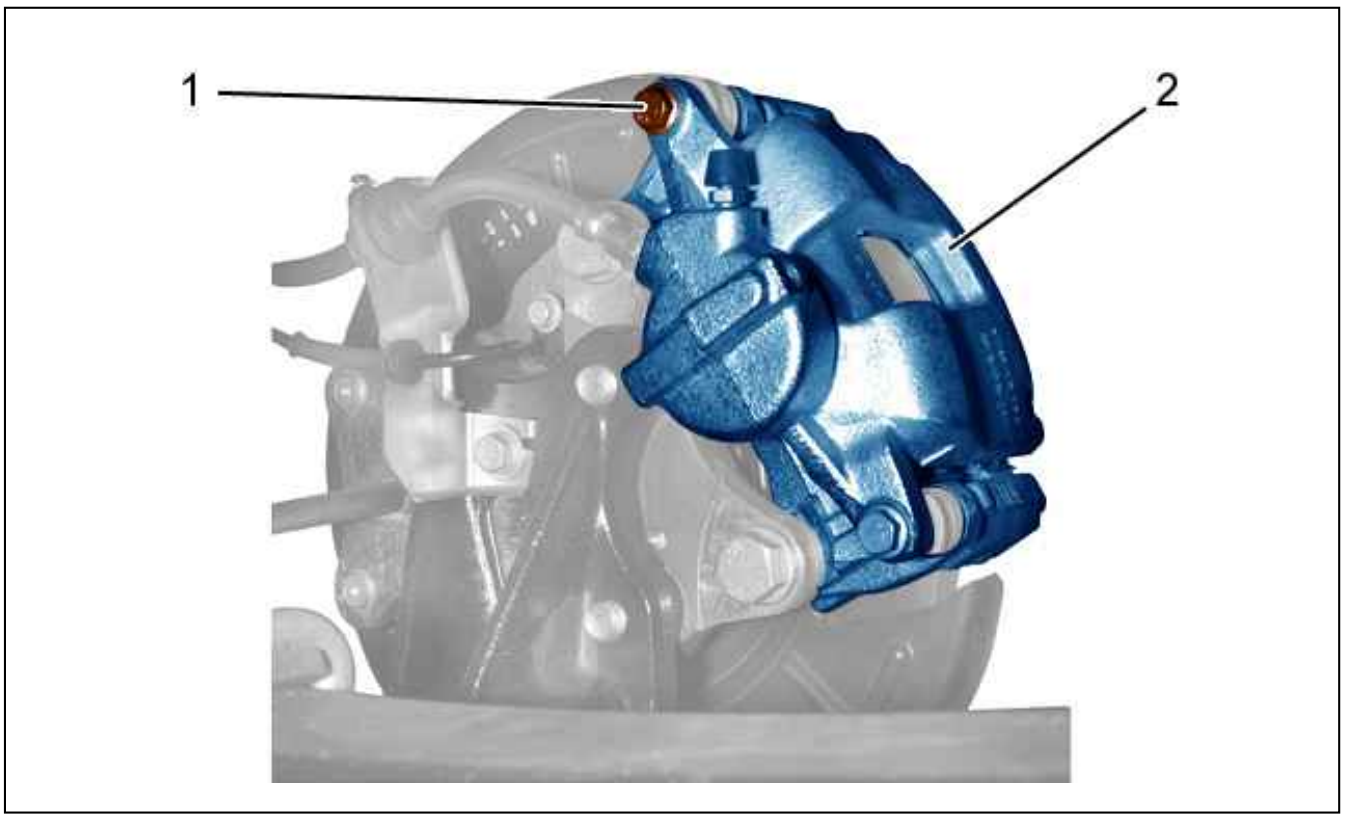

Figure : B3FP7KVD

Remove (on each side) :

- The (1) bolt
- The brake caliper (2)

Hang the brake caliper on the body.

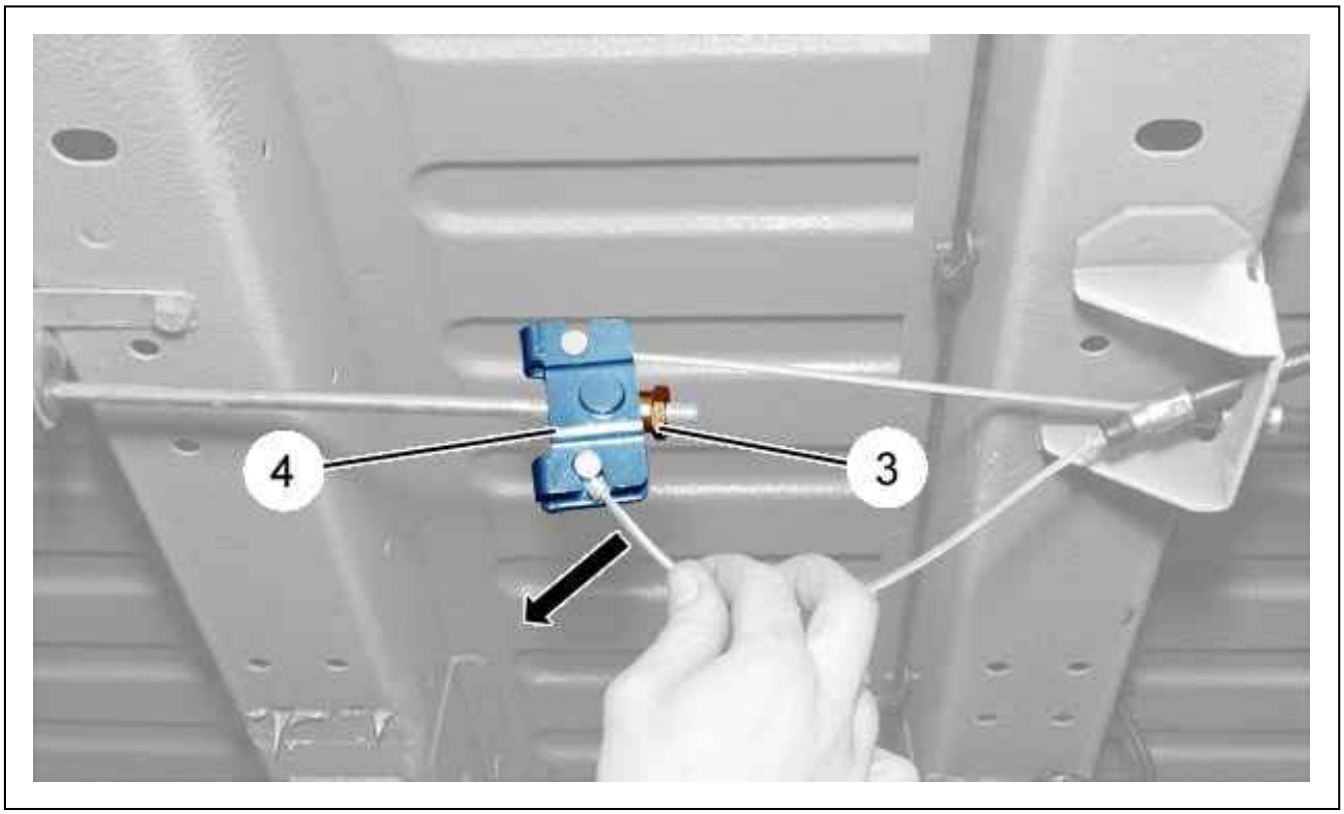

Figure : B3FP7KWD

Unscrew nut (3).
Uncouple the handbrake cables at the compensator (4) (following the arrow).

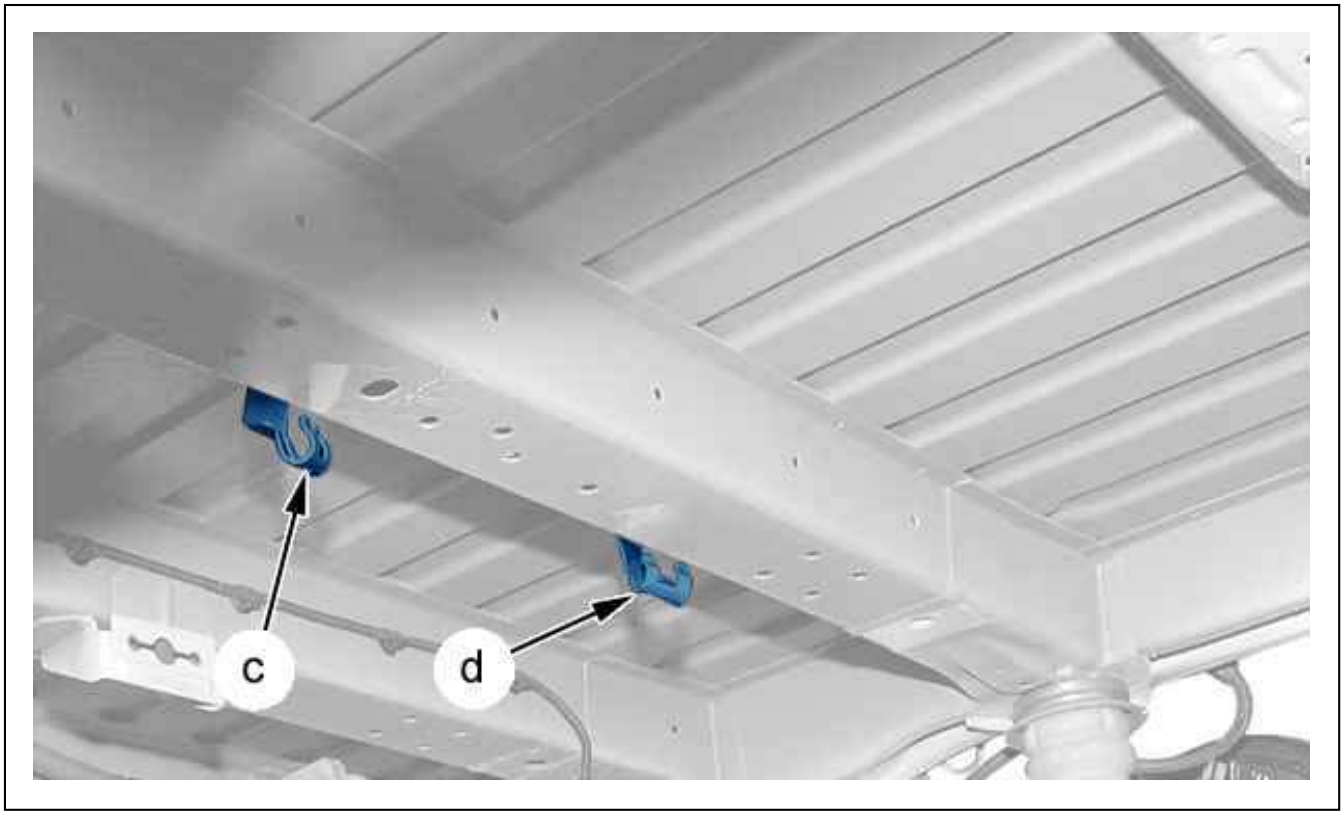

Figure : B3DP0DHD

Remove the handbrake sleeves from their housing (at "c, "d").



Figure : B3BP1CND

Slacken the upper fixing (5) of the dampers (on each side).

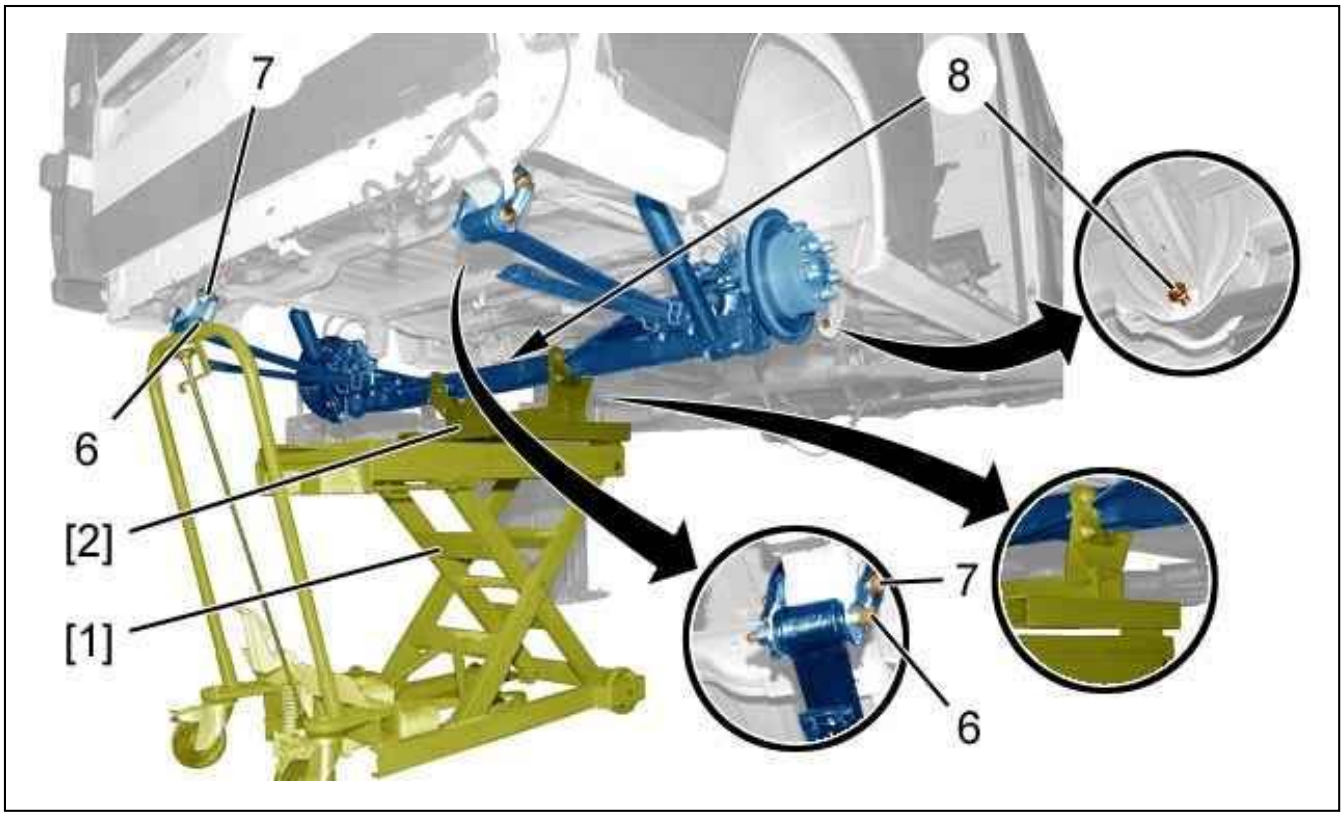

Figure : C4BP1QXD

Position the tool [2] under the rear suspension ; Using tool [1].
Keep the rear axle in position using the lifting tool [2].
Slacken off suspension blade screws (6).
Remove :

- The rear suspension fixing bolts (7), (8)
- The upper fixing (5) of the dampers (on each side)

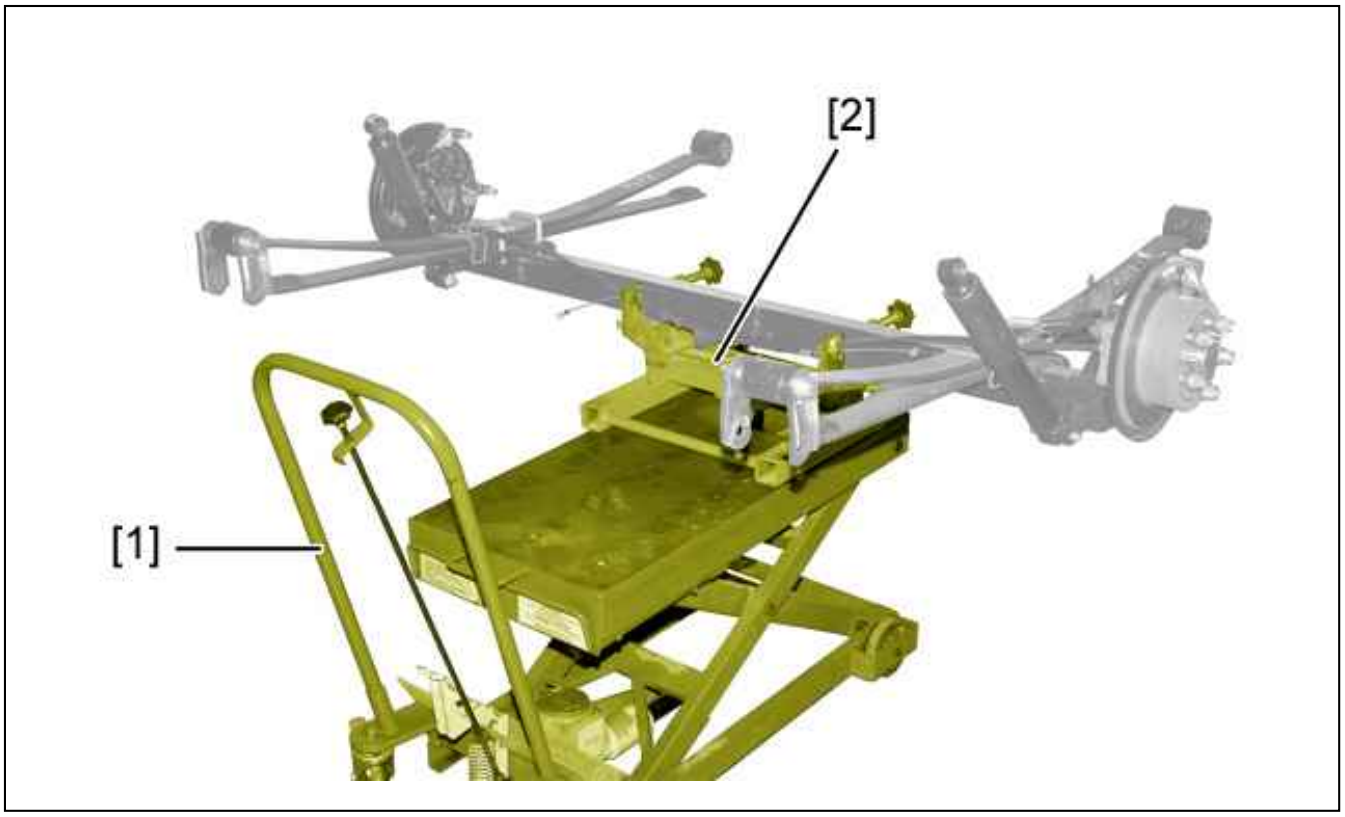

Figure : B3DP0DJD

Remove the rear suspension.
Handle the rear suspension ; Using tool [1].
Equip tool [2] plate with its detachable legs, so as to liberate tool [1].

3. Refitting

CAUTION : Always fit new Nylstop nuts.

Place the rear axle under the vehicle ; Using tool [1].
Refit :

- The rear axle
- The bolts (7), (8)

Refit dampers upper fixing (5).

ESSENTIAL : Before carrying out the final tightening of fixings (5), (6), (7), (8), the vehicle MUST be placed at the load setting height.

Remove the tools [1], [2].
Refit (on each side) :

- The brake caliper (2)
- The bolt (1) (new) Pre-coated with a thread-locking product

Tighten the bolt (1) to 3 ± 0,3 daN.m.
Fit the brake pads (see the relevant operation).
Couple the handbrake cables at the compensator (4).
Fit the handbrake sleeves in their housing (at "c, "d").
Adjust The handbrake cables (see the relevant operations).

Reconnect the wheel sensor connector " b " (on each side).
Clip the wheel sensor harness on the body (on each side).
Return the spare wheel to its place.
Refit the rear wheels.
Return the vehicle to its wheels.
Before carrying out the final tightening of fixings , the vehicle MUST be placed at the load setting height (see the relevar operation).
Tighten :

- The bolts (5), (6), (7) to 14,5 ± 1,2 daN.m
- The bolts (8) to 18,5 ± 2,9 daN.m

Tighten the wheel bolts .
Reconnect the battery negative terminal.

REMOVING - REFITTING : REAR STUB AXLE

1. Removing

Untighten the wheel screws (rear).
Raise and support the vehicle, with the rear wheels hanging free.
Remove the rear wheels.

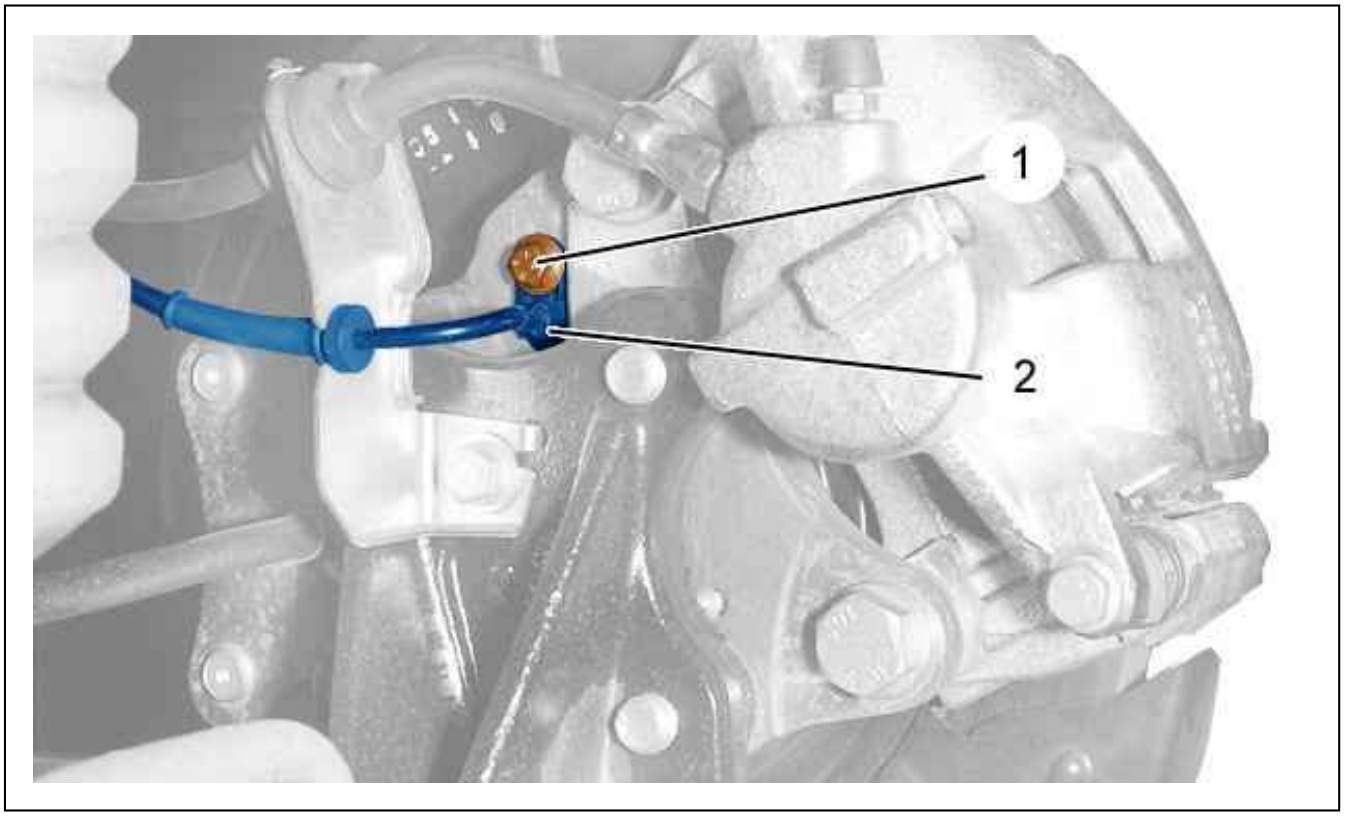

Figure : B3FP7LAD

Remove bolts (1).
Move aside the wheel speed sensor (2).
Remove :

- The rear hub (see the relevant operation)
- The parking brake shoes (see the relevant operation)

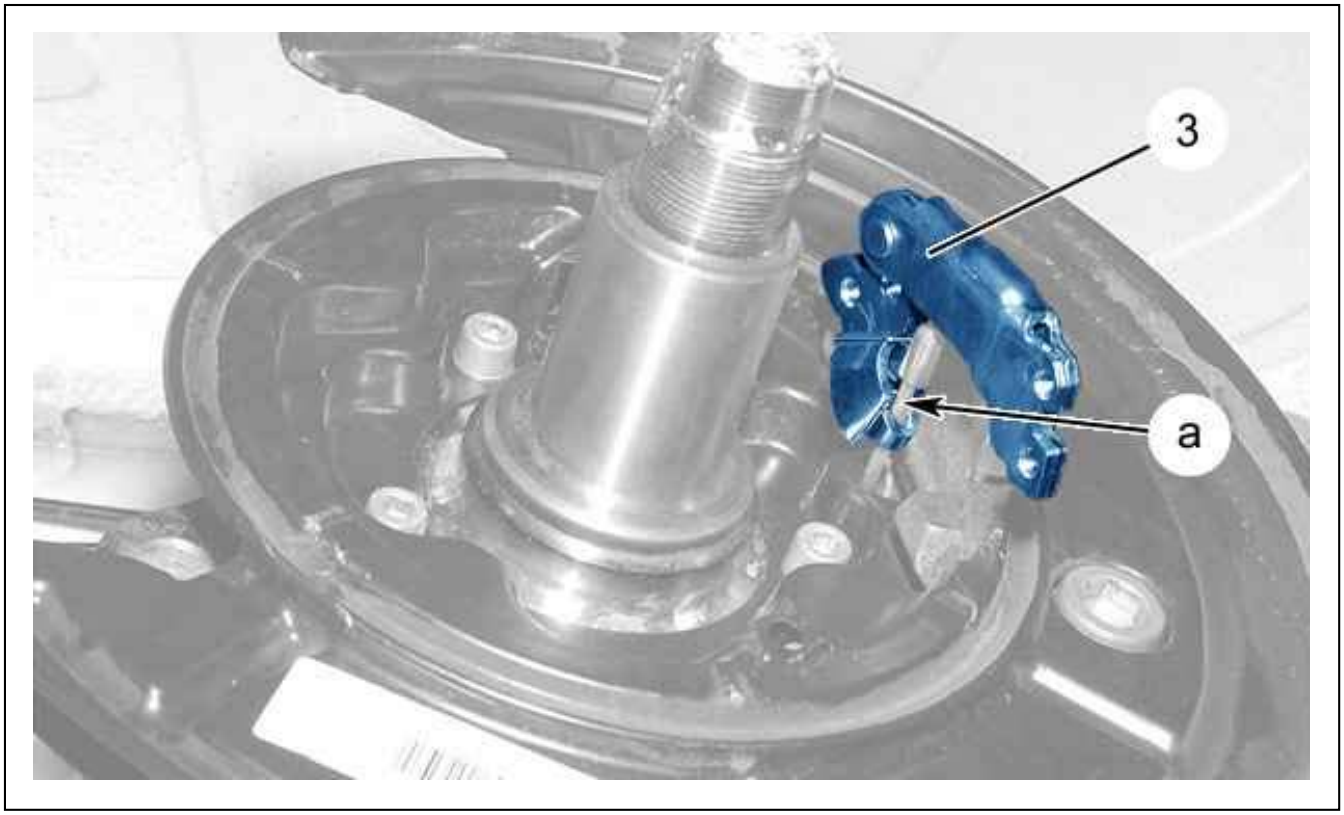

Figure : B3FP7LBD

Uncouple the parking brake control lever cable (3) (at "a").
Remove the parking brake control lever (3).

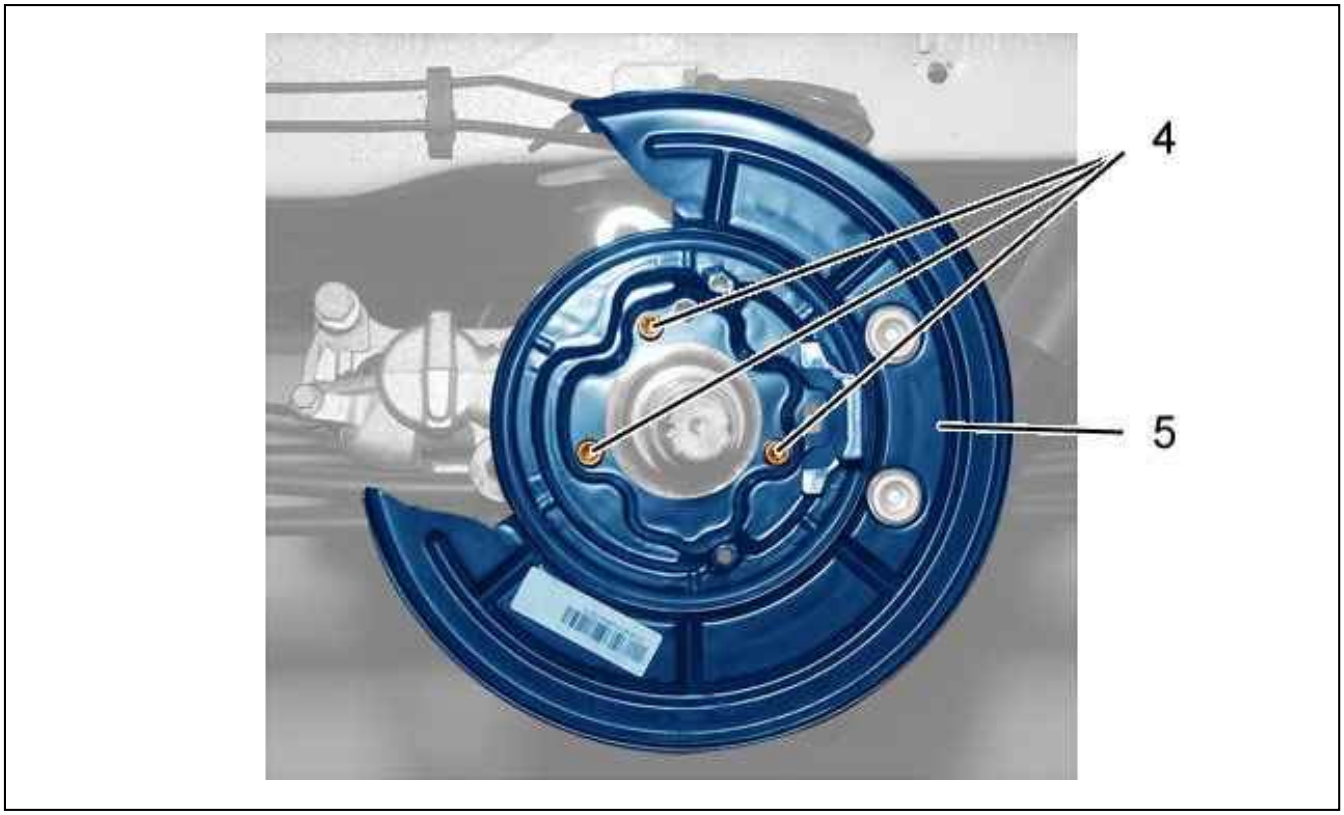

Figure : B3FP7LCD

Remove :

- The bolts (4)
- The backplate (5)

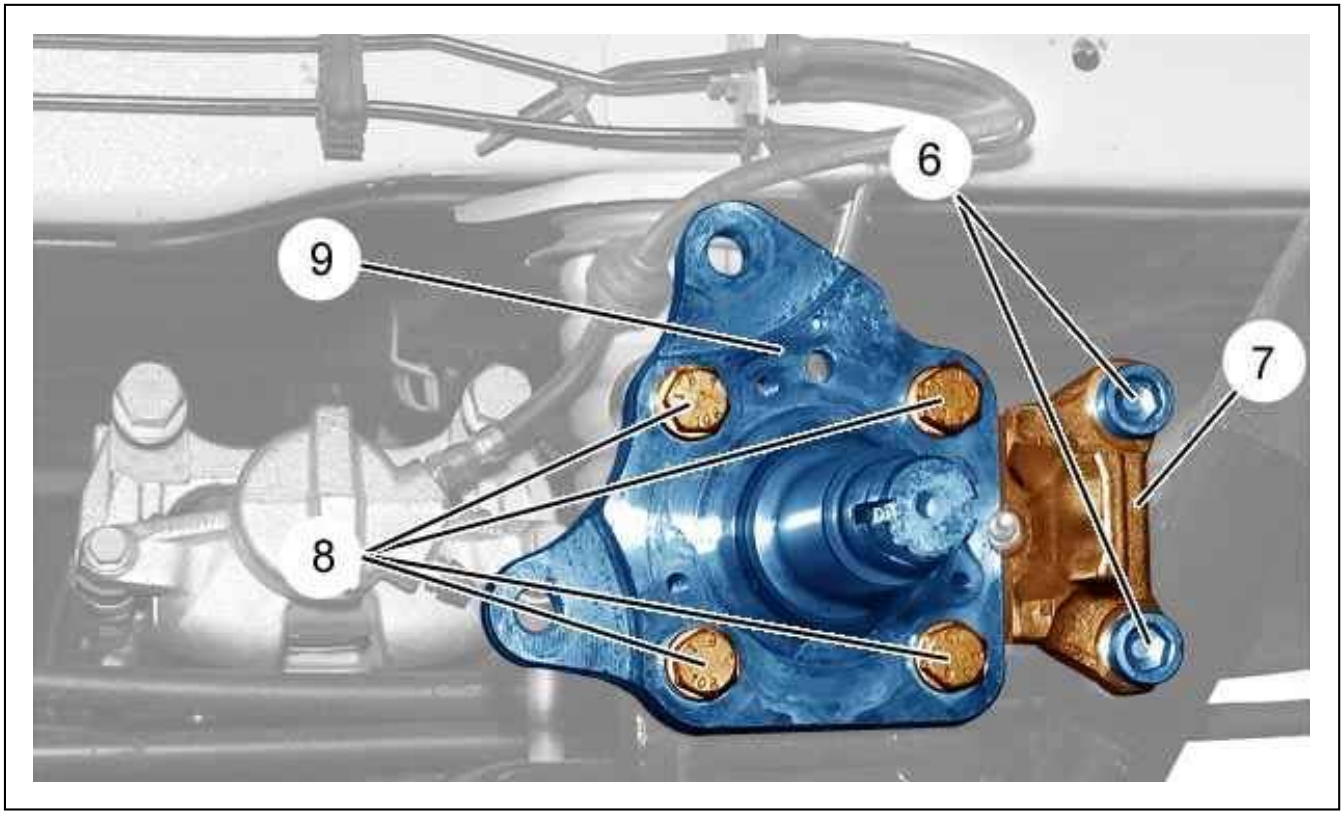

Figure : B3DP0DMD

Remove :

- The bolts (6)
- The bracket (7)
- The bolts (8)
- The stub axle (9)

2. Refitting

Refit :

- The stub axle (9)
- The bolts (8) ; Tighten to 20 ± 2 daN.m

Refit :

- The bracket (7)
- The bolts (6) (new) (pre-coated with a thread locking product)

Tighten the bolts (6) to 20 ± 2 daN.m.
Refit :

- The backplate (5)
- The bolts (4) ; Tighten to 2,5 ± 0,2 daN.m

Refit the parking brake control lever (3).
Couple the parking brake control lever cable (3) (at "a").
Refit :

- The parking brake shoes (see the relevant operation)
- The rear wheel sensor (2)

- The (1) bolt ; Tighten to 0,8 ± 0,3 daN.m
- The rear hub (see the relevant operation)

REMOVING - REFITTING : REAR HUB

1. Recommended tools

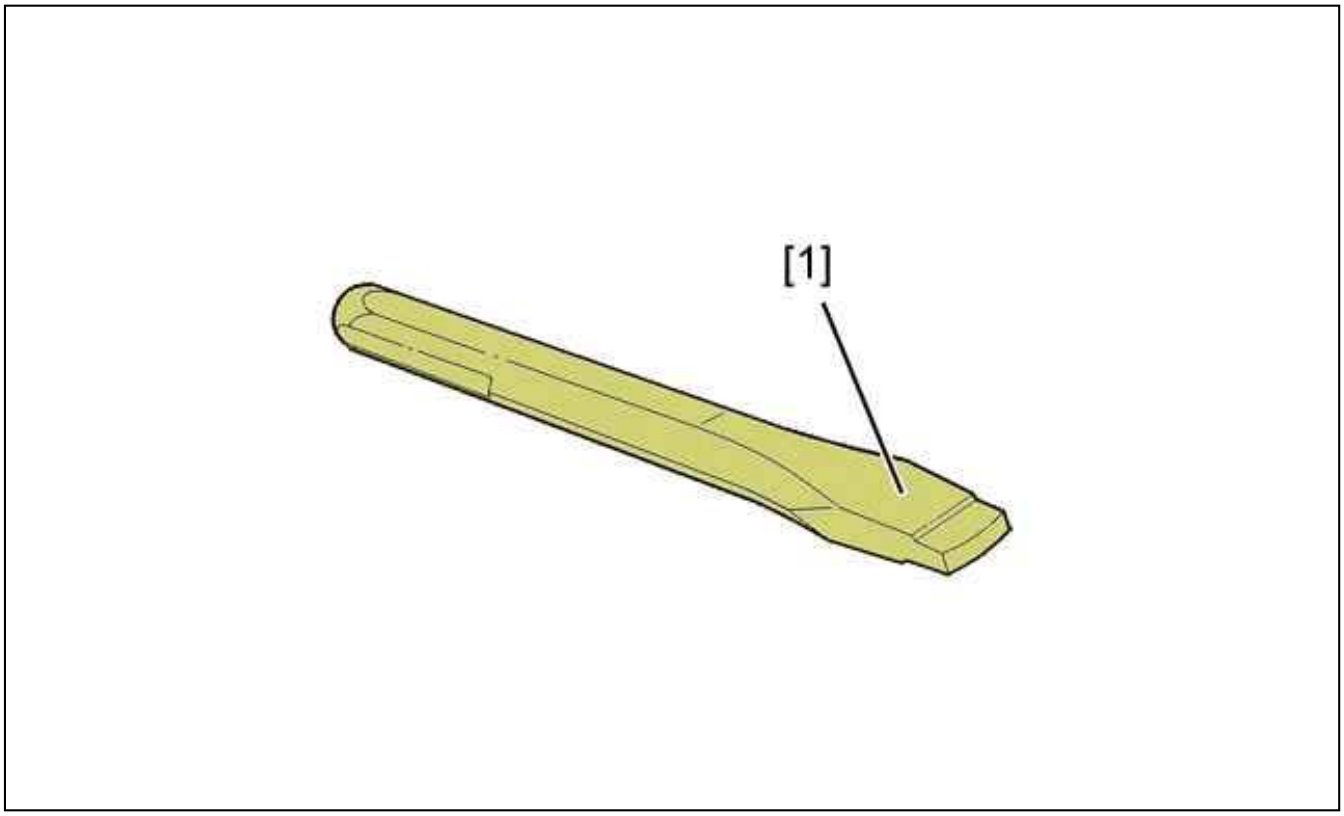

Figure : E5AP2Y9D

Reference	Designation	Reference	Reference
[1]	locking punch	5709-T.E (kit 5709-T)	(-).0619E (kit (-).0619)

2. Removing

Untighten the wheel screws (rear).
Raise and support the vehicle, with the rear wheels hanging free.
Remove :

- The rear wheels
- The hub cap
- The brake disc (see the relevant operation)

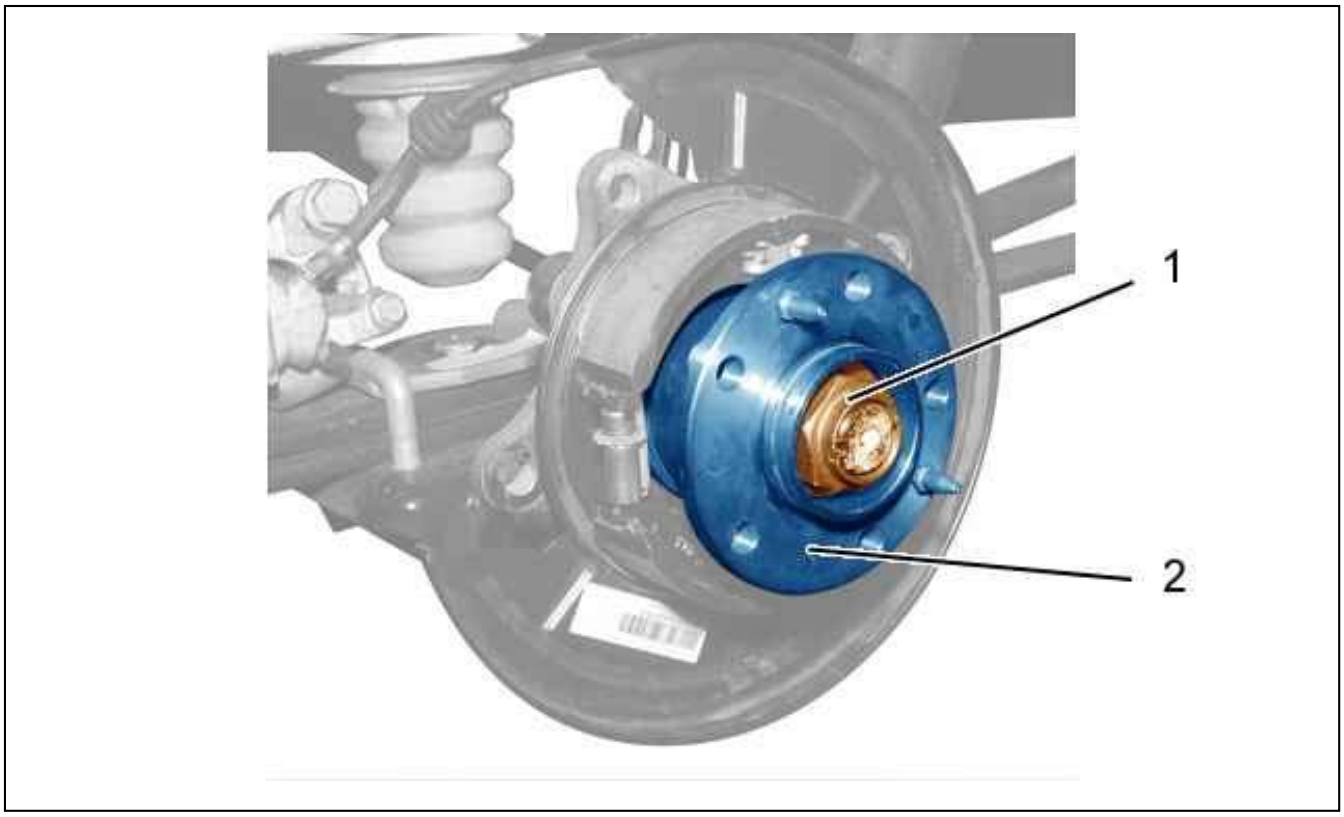

Figure : B3FP7L8D

Unlock the nut (1).
Remove :

- The nut (1)
- The rear hub (2)

3. Refitting

Refit :

- The rear hub (2)
- The nut (1)

N.B. : Use a new nut.

Tighten the nut (1) to 45 ± 1,5 daN.m.

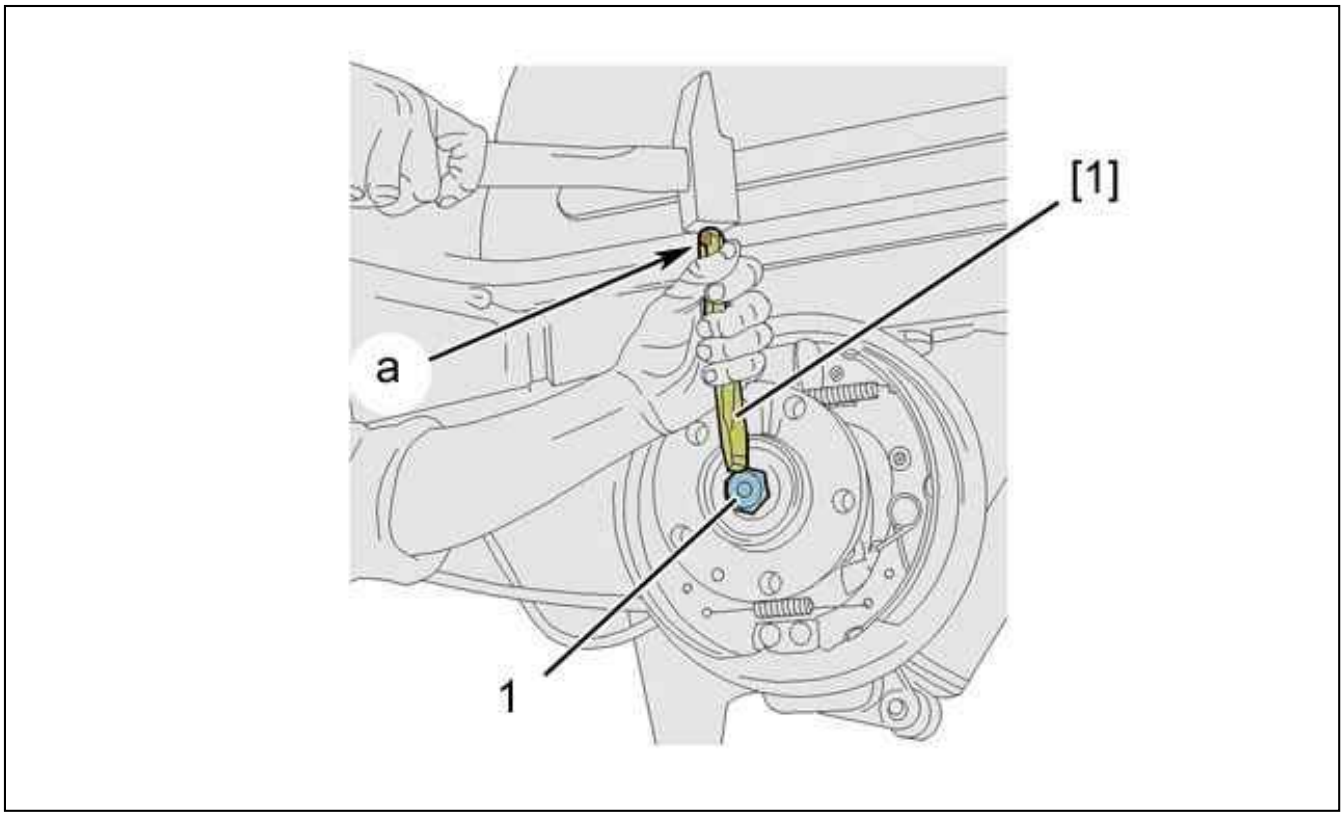

Figure : B3FP7L9D

Lock the nut (1) ; Using tool [1].
The flat part "a" of the tool should always face outwards.

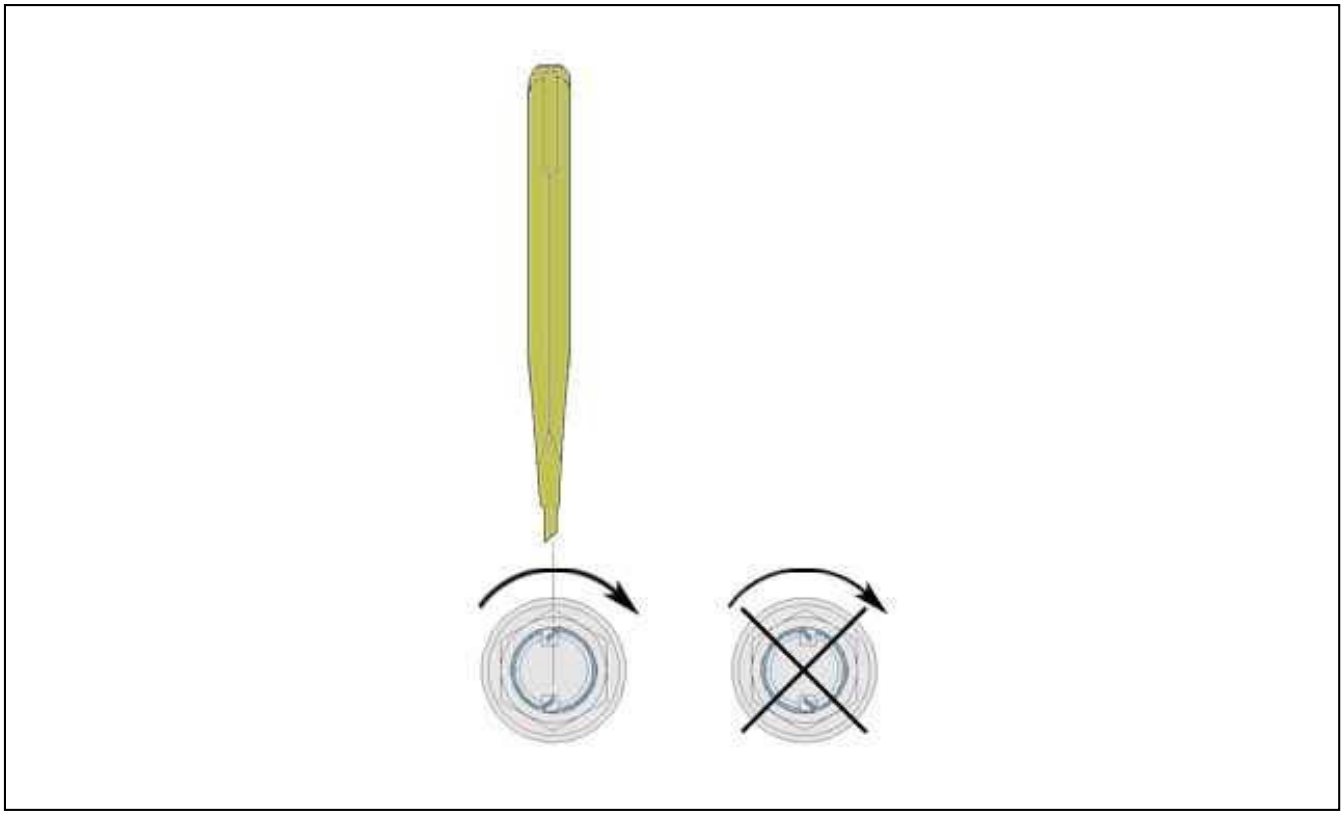

Figure : B2FP06ND

CAUTION : The nut collar must be locked in the opposite direction to tightening.

4. Additional operation

Refit :

- The brake disc (see the relevant operation)
- The wheels

Return the vehicle to its wheels.
Tighten the wheel bolts .

REMOVING - REFITTING : REAR SUSPENSION BLADE RUBBER BUSHES ON BODY

ESSENTIAL : Observe the safety and cleanliness recommendations.

1. Recommended tools

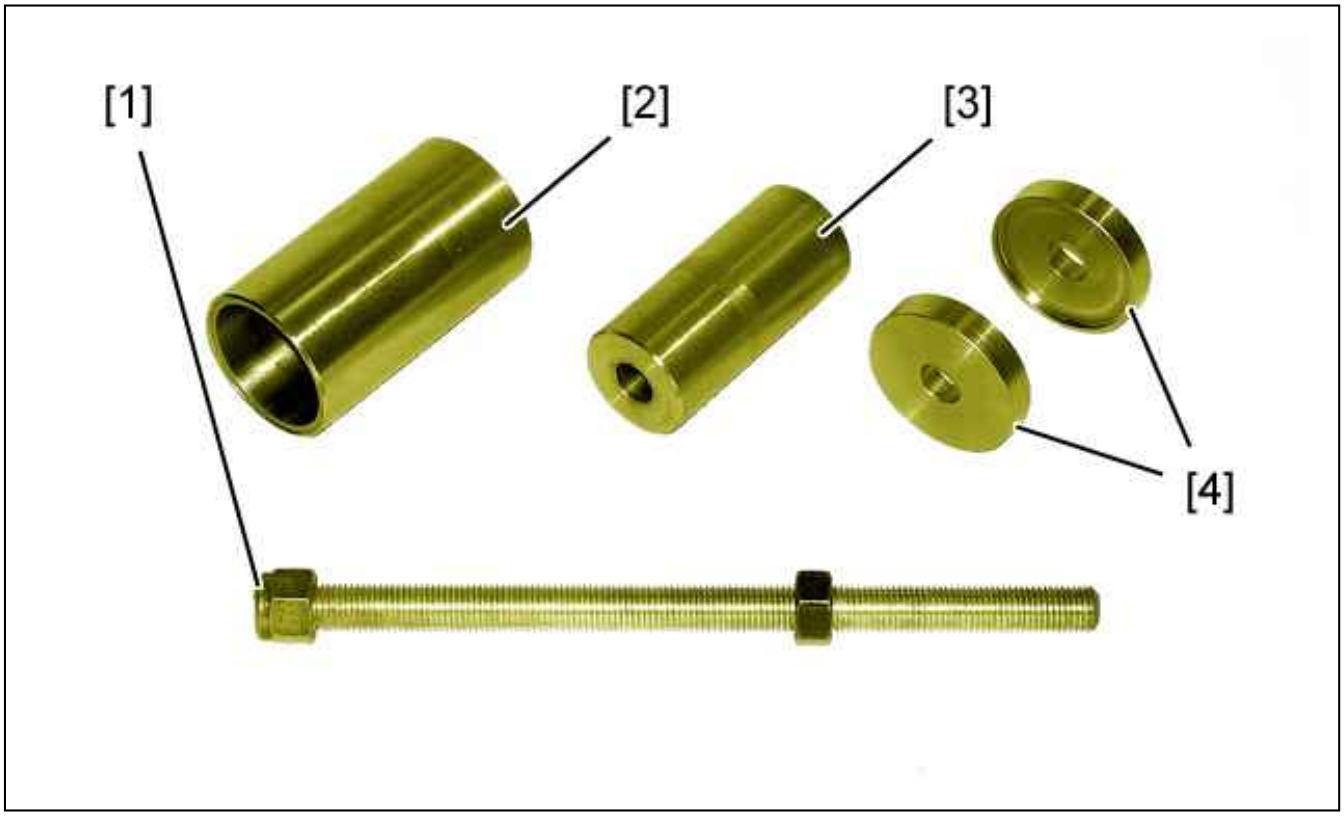

Figure : E5AP3KCD

Reference	Designation	Reference	Reference
[1]	Bolt-nut assembly	5709-T.U1	(-).0619.U1
[2]	removal cap - Refitting the rubber bushes	5709-T.U2	(-).0619.U2
[3]	Flexible mounting removal dolly	5709-T.U3	(-).0619.U3
[4]	Rubber bush refitting cups	5709-T.U4	(-).0619.U4

2. Removing

Disconnect the battery negative terminal.
Untighten the wheel screws (rear).

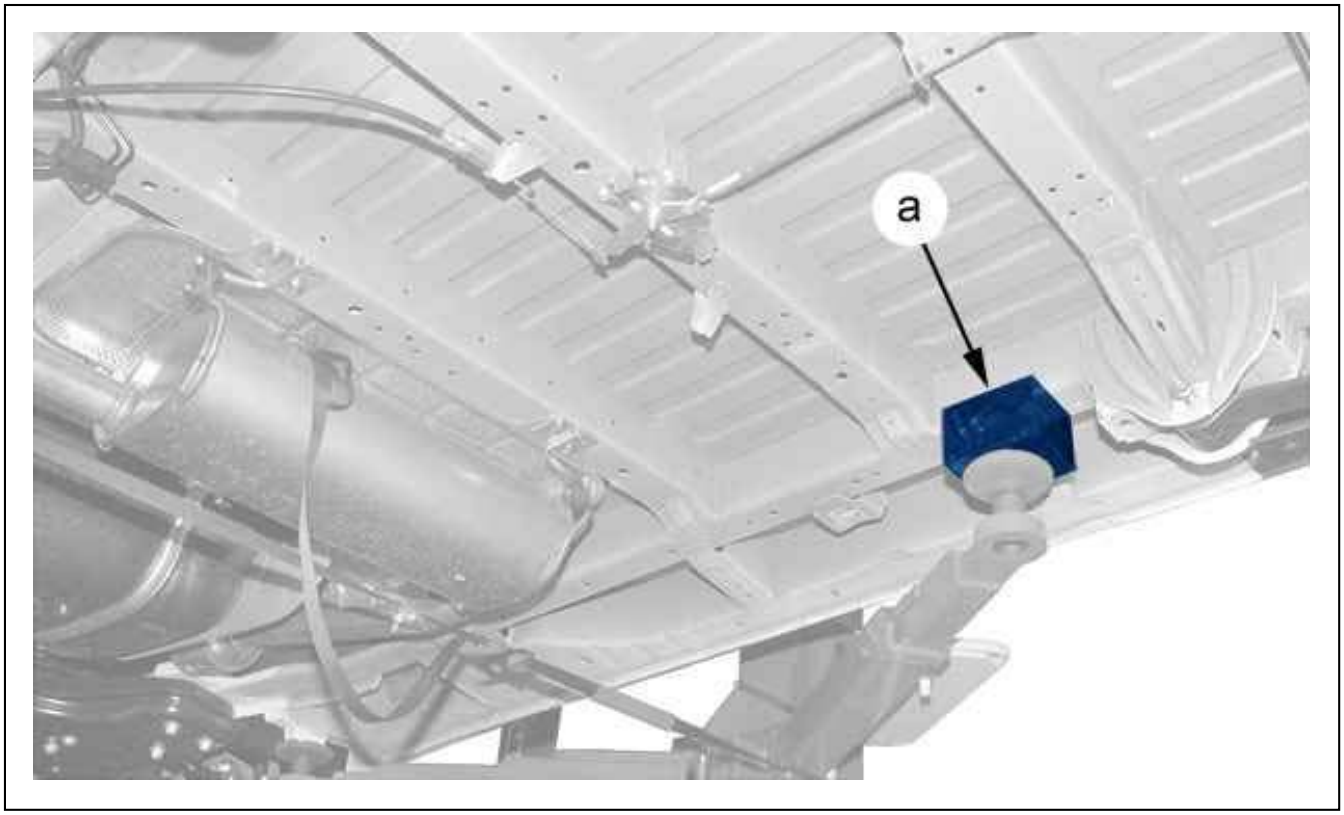

Figure : B3DP0DFD

CAUTION : When raising and jacking up the vehicle, place the rubber pads of the lift under the body reinforcements a "a".

Raise and support the vehicle, with the rear wheels hanging free.
Remove the rear wheels.
Position a lifting tool to support the rear suspension.



Figure : B3BP1G5D

Remove bolts (1).

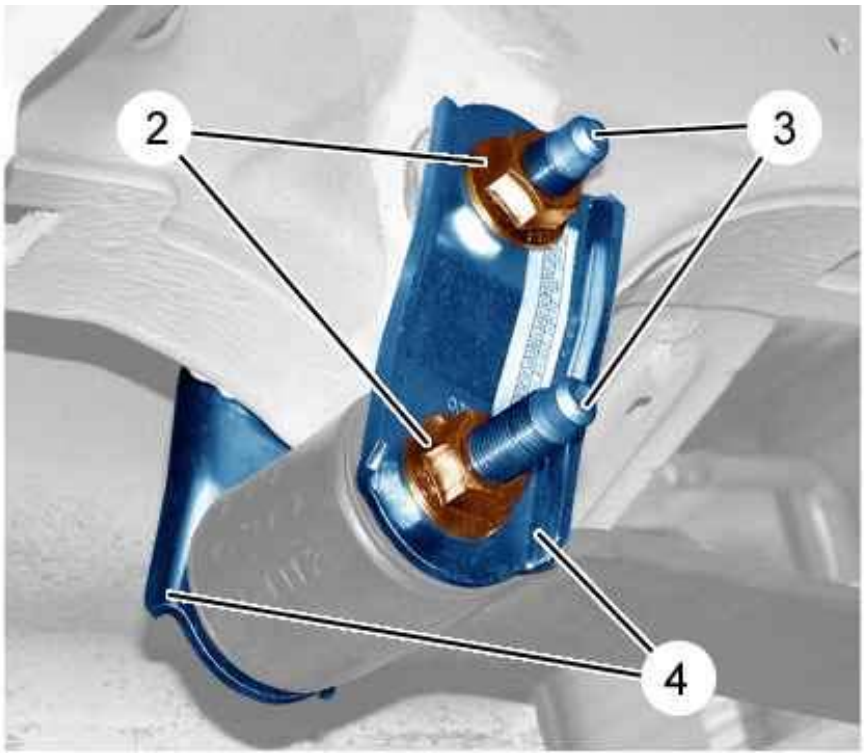

Figure : B3DP0G1D

Remove the nuts (2).
Lower the rear suspension by a few centimetres to release the bolts (3).

Remove :

- The bolts (3)
- The suspension blade levers (4)

Raise the rear suspension by a few centimetres.
Refit bolt (1).

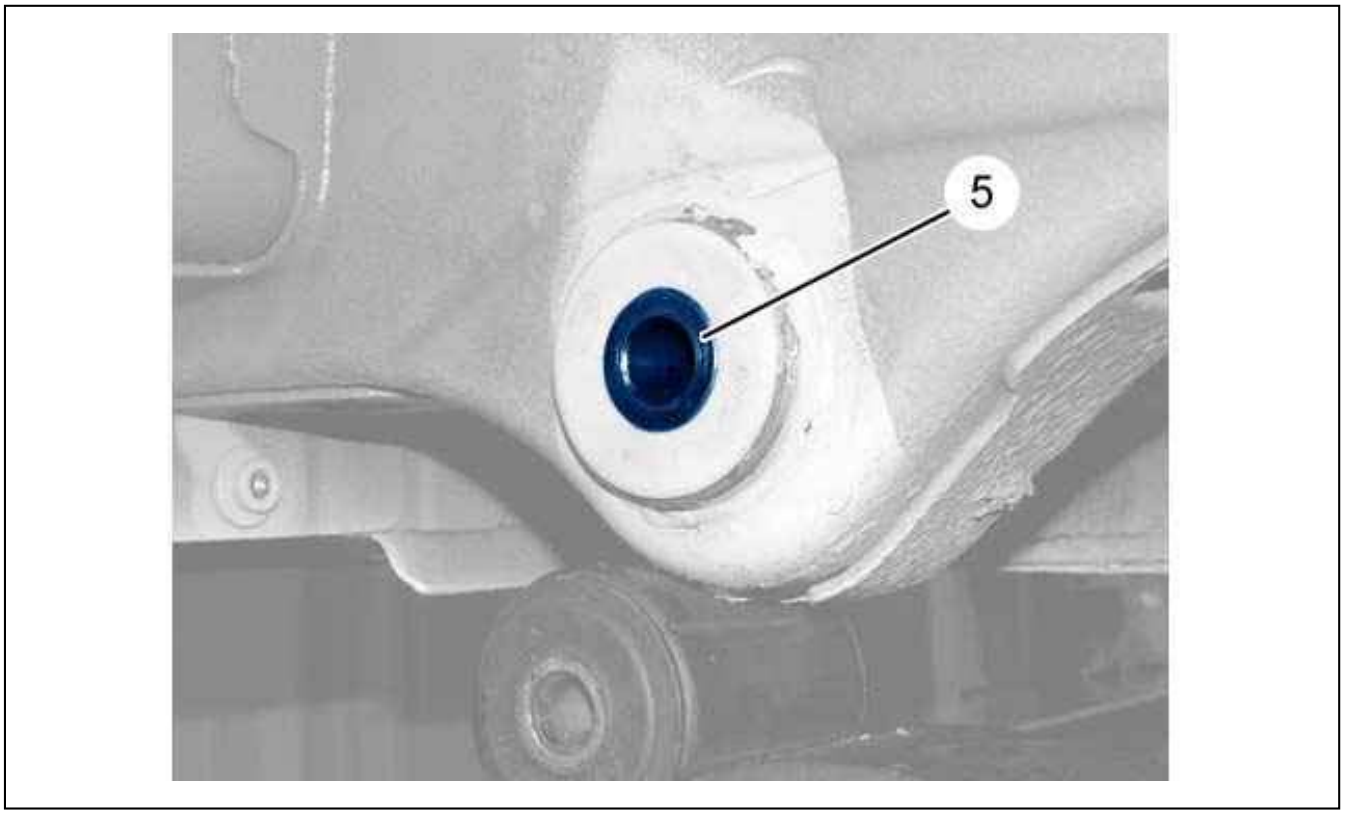

Figure : B3DP0G2D

Drive out the sleeve (5) ; Using a jet.

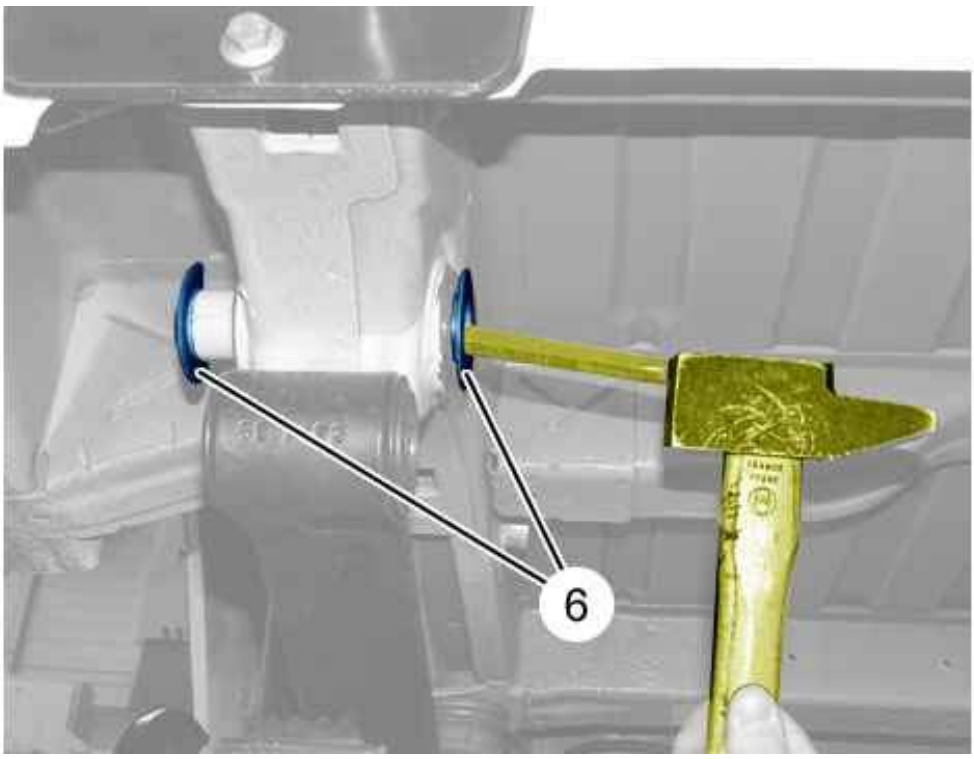

Figure : B3DP0G3D

Drive out the cup (6) (on each side).

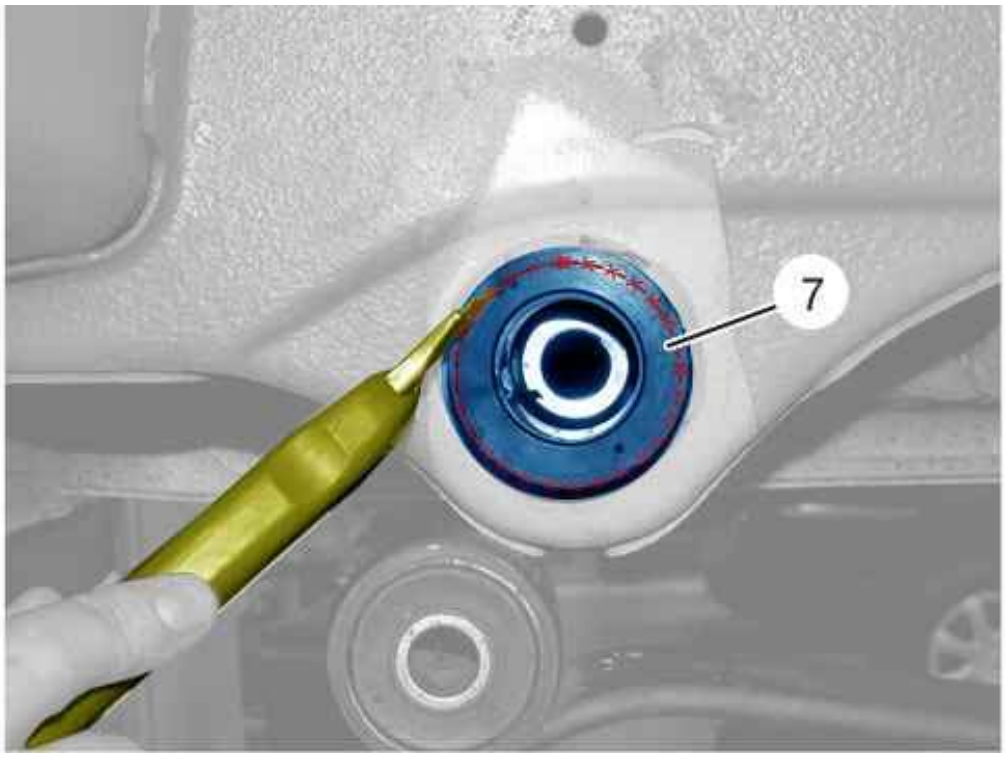

Figure : B3DP0G4D

Cut the collar of the rubber bush (7) (on each side).

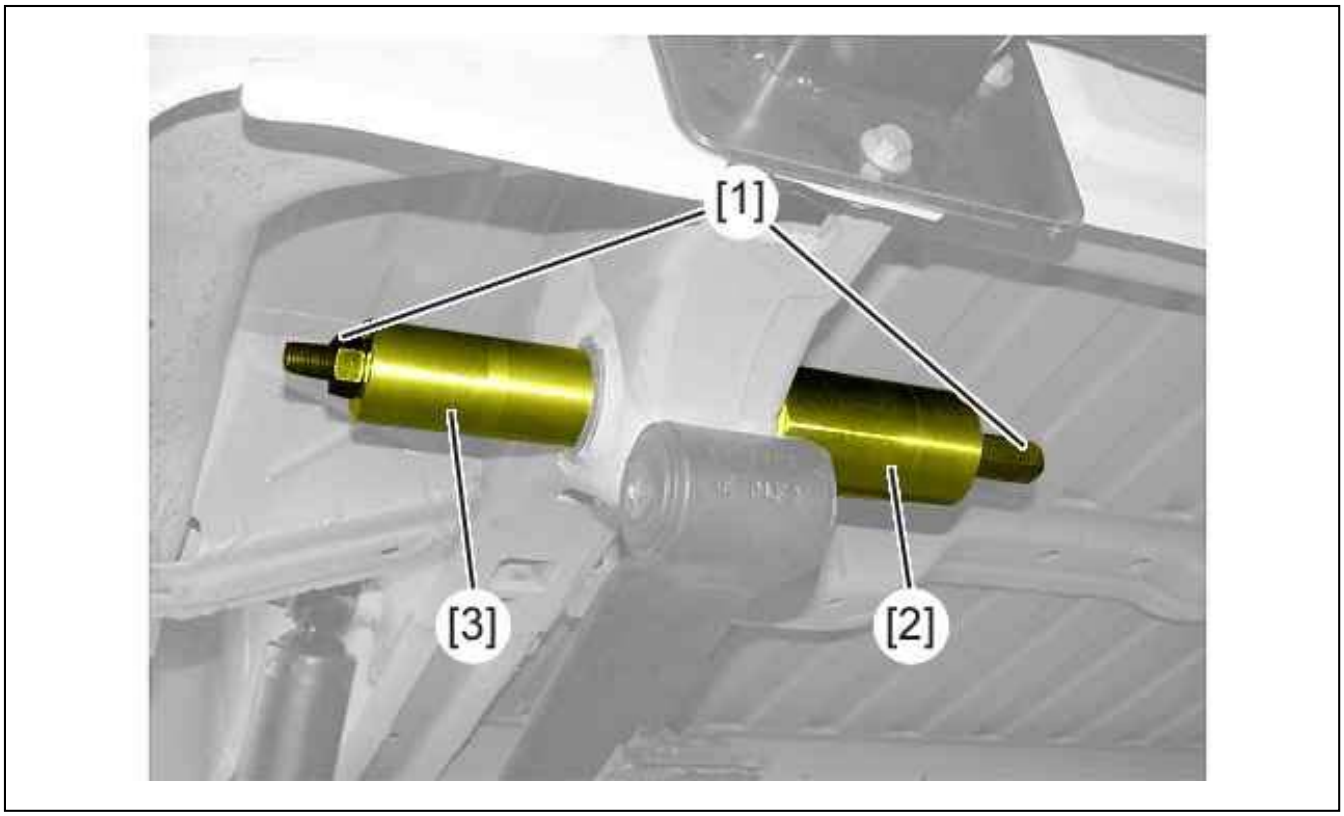

Figure : B3DP0G5D

Remove the rubber bushes (7) ; Using the tools [1], [2], [3].

3. Refitting

CAUTION : The components must be clean and free of any signs of abnormal wear or impacts; if any surface marking or paint flaking is visible, apply an anticorrosion paint.

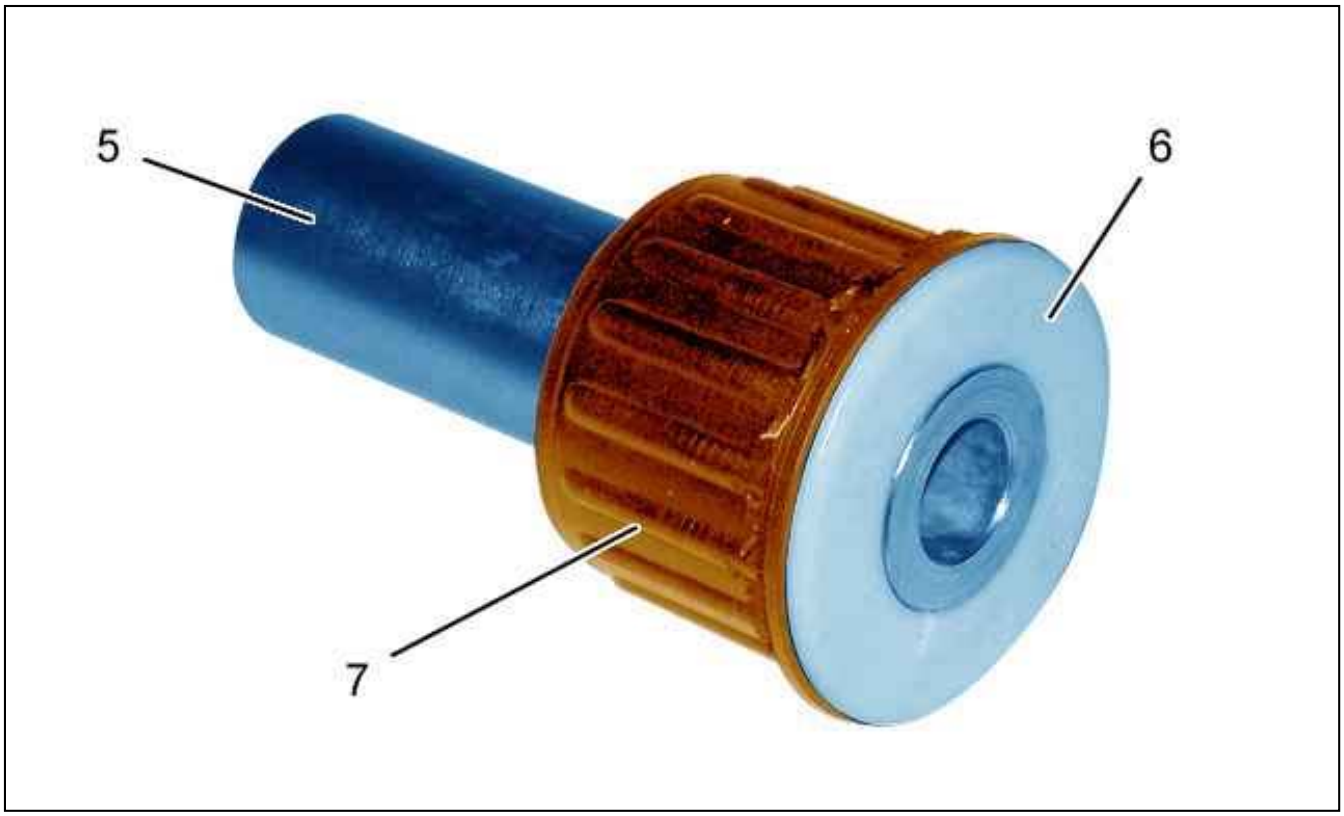

Figure : B3BP1G6D

Assemble the cup (6) - new rubber bush (7) assembly presenting the greatest resistance to assembly on the sleeve (5).
Pre-coat the rubber bushes (7) with grease used to fit the tyres.
Position the cup (6) - rubber bush (7) - sleeve (5) assembly on the vehicle (towards the outside).

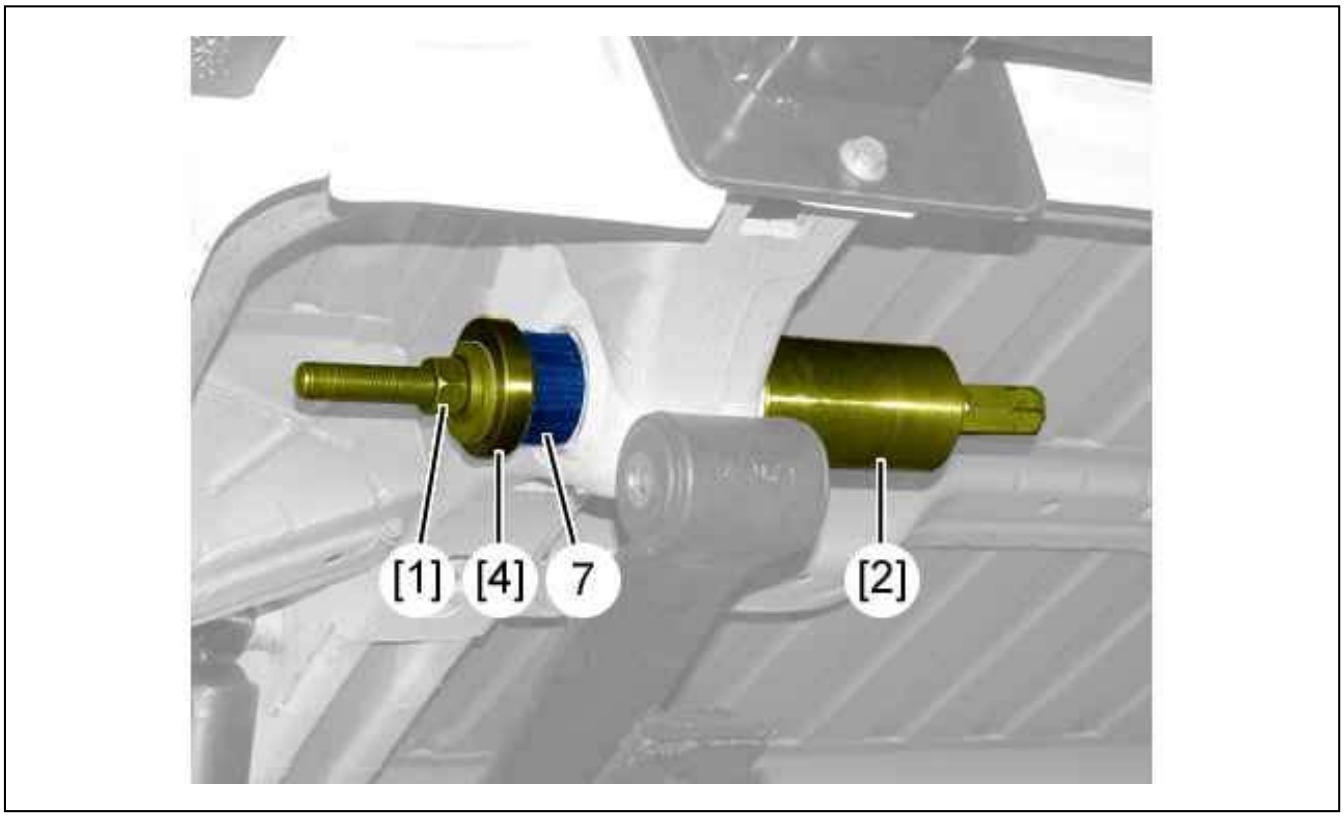

Figure : B3DP0G6D

Position the tools [1], [2], [4] on the vehicle.

N.B. : Put the tool [1] in place from the inner side.

Fit the cup (6) - rubber bush (7) - sleeve (5) assembly ; Using the tools [1], [2], [3].
Remove the tools [1], [2], [4].

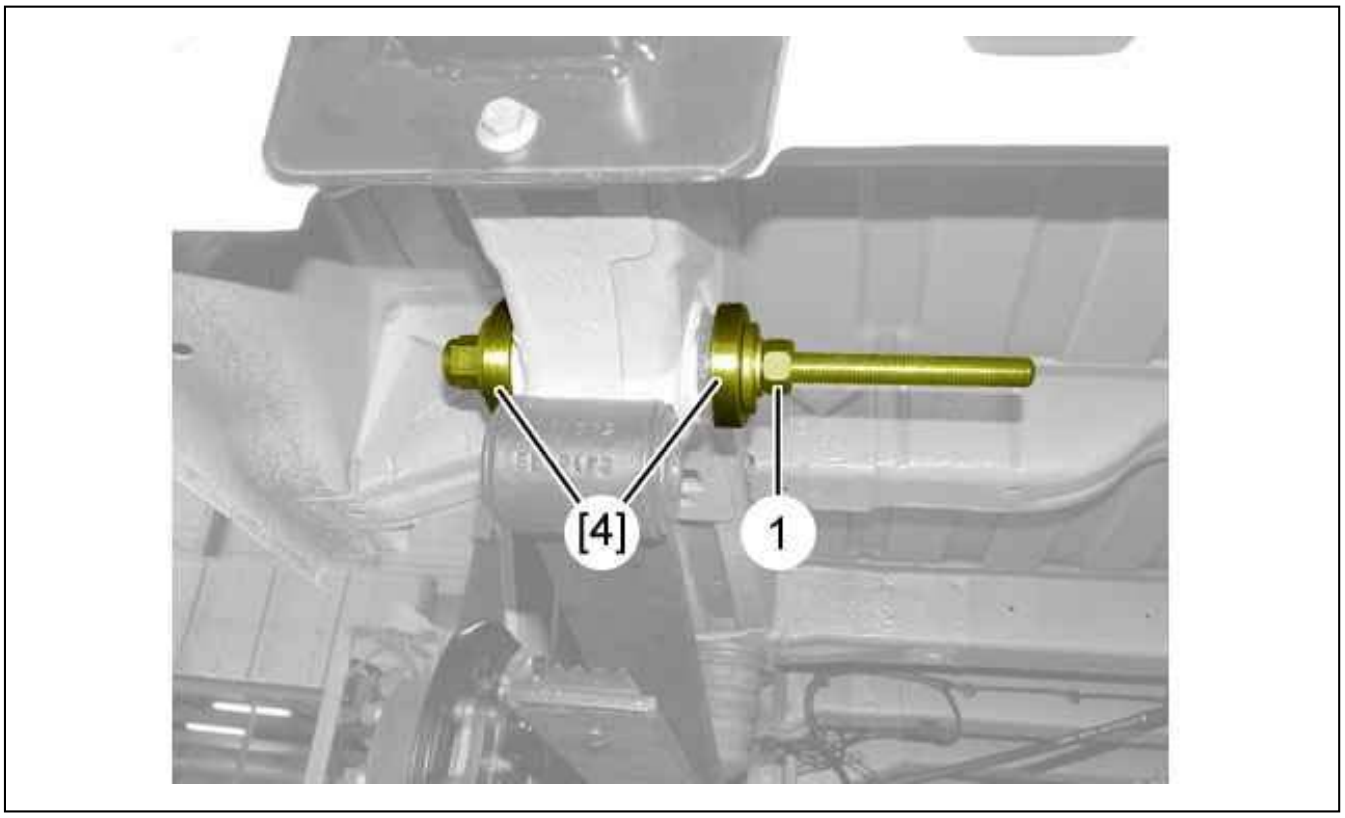

Figure : B3DP0G7D

Position the cup (6) - rubber bush (7) assembly (inner side).
Fit the cup (6) - rubber bushes (7) assembly to the limit of the vehicle's structure ; Using the tools [1], [4].

CAUTION : Check the condition of the structure ; If surface marking or paint flaking is visible, apply an anticorrosior paint.

Remove the tools [1], [4].
Position a lifting tool to support the rear suspension.
Remove bolts (1).
Lower the rear suspension by a few centimetres.
Refit :

- The suspension blade levers (4)
- The bolts (3)
- The nuts (2) (without tightening)

Raise the rear suspension by a few centimetres.
Refit :

- The bolt (1) (without tightening)
- The rear wheels

Return the vehicle to its wheels.
Place the vehicle at its reference ride height (see the relevant operation).

Tighten :

- The nuts (2) to 14,5 ± 1,2 daN.m
- Screw (1) to 14,5 ± 1,2 daNm

Tighten the wheel bolts .

Reconnect the battery negative terminal.

CAUTION : Perform the operations to be carried out following reconnection of the battery.

REMOVING - REFITTING : REAR SUSPENSION BLADE RUBBER BUSHES ON BODY

ESSENTIAL : Observe the safety and cleanliness recommendations.

1. Recommended tools

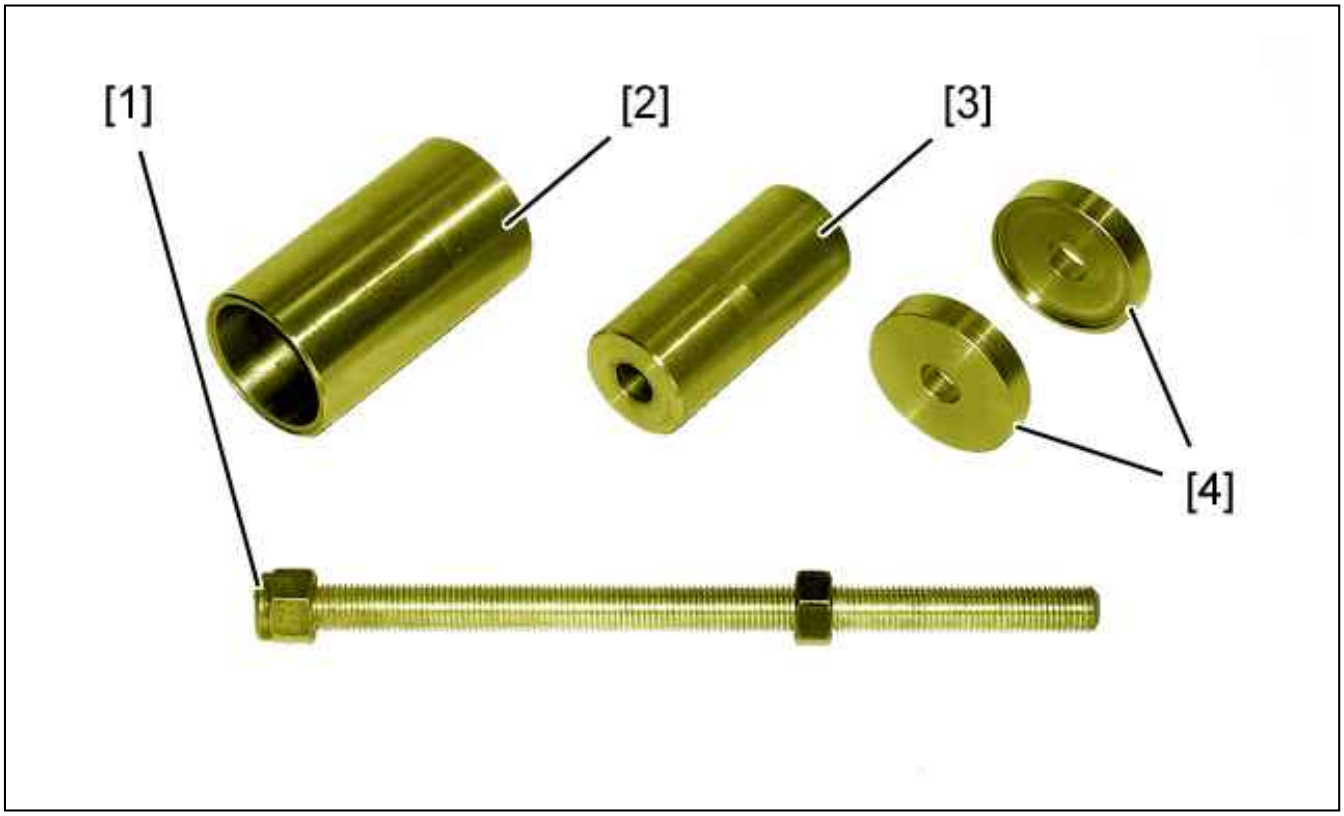

Figure : E5AP3KCD

Reference	Designation	Reference	Reference
[1]	Bolt-nut assembly	5709-T.U1	(-).0619.U1
[2]	removal cap - Refitting the rubber bushes	5709-T.U2	(-).0619.U2
[3]	Flexible mounting removal dolly	5709-T.U3	(-).0619.U3
[4]	Rubber bush refitting cups	5709-T.U4	(-).0619.U4

2. Removing

Disconnect the battery negative terminal.
Untighten the wheel screws (rear).

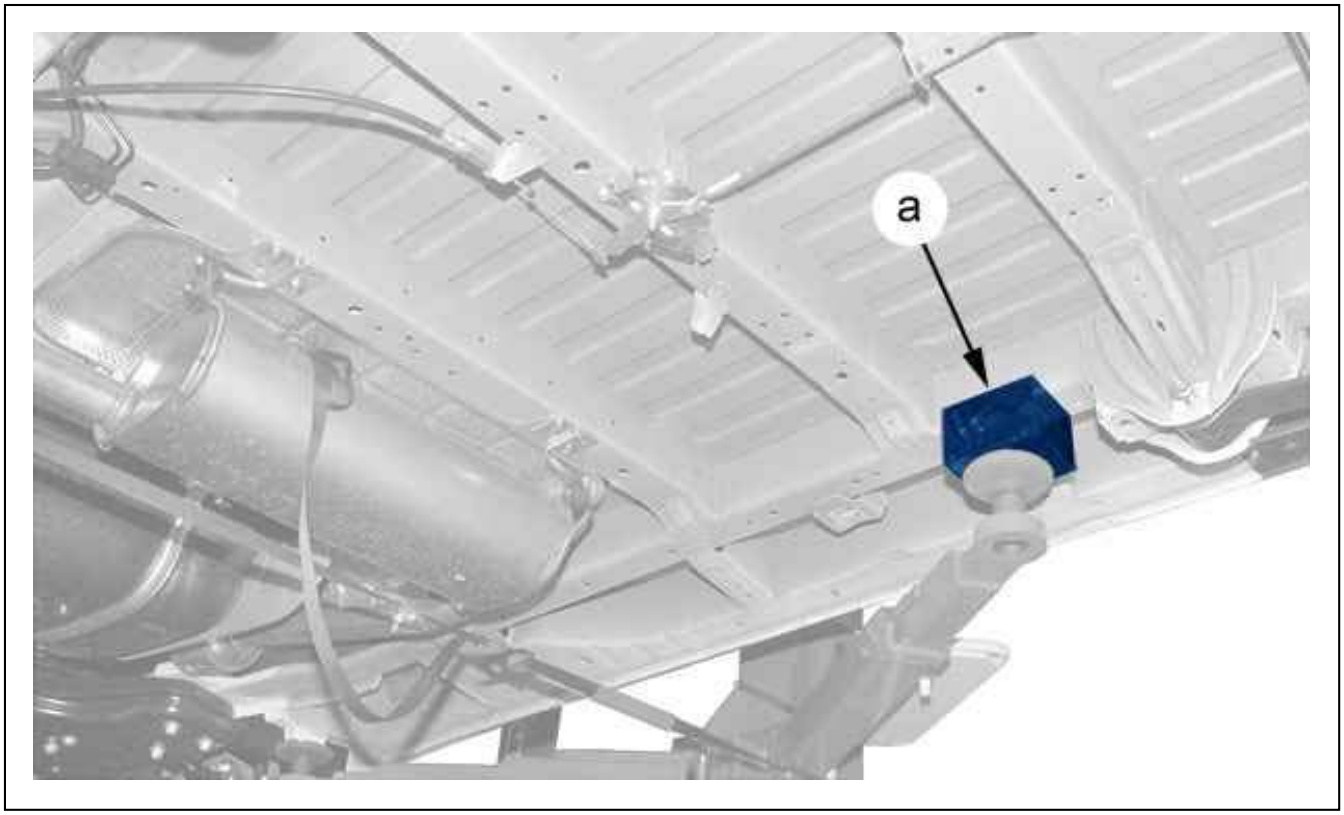

Figure : B3DP0DFD

CAUTION : When raising and jacking up the vehicle, place the rubber pads of the lift under the body reinforcements a "a".

Raise and support the vehicle, with the rear wheels hanging free.
Remove the rear wheels.
Position a lifting tool to support the rear suspension.



Figure : B3BP1G5D

Remove bolts (1).

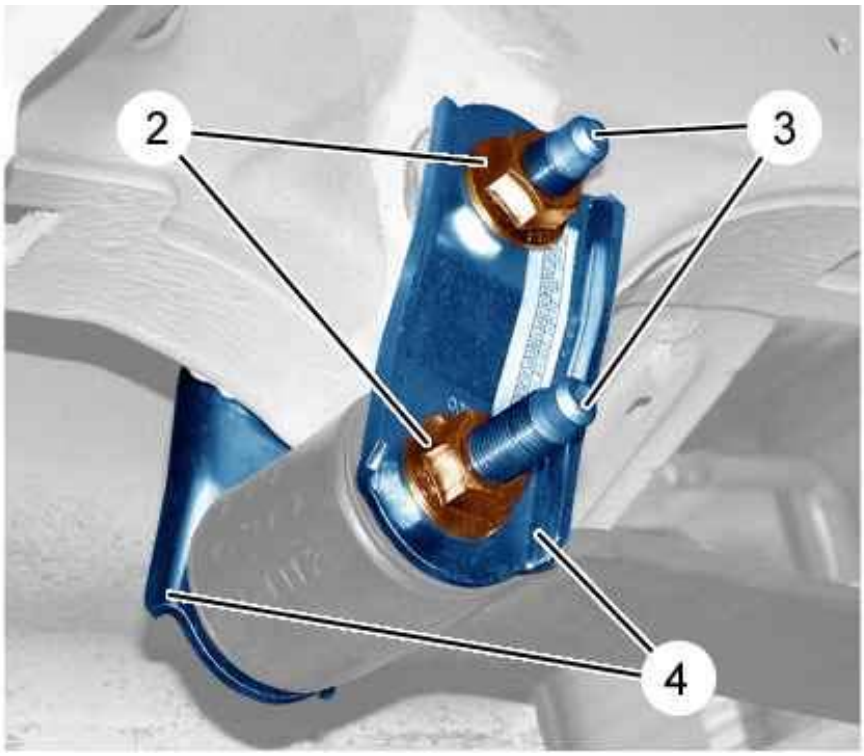

Figure : B3DP0G1D

Remove the nuts (2).
Lower the rear suspension by a few centimetres to release the bolts (3).

Remove :

- The bolts (3)
- The suspension blade levers (4)

Raise the rear suspension by a few centimetres.
Refit bolt (1).

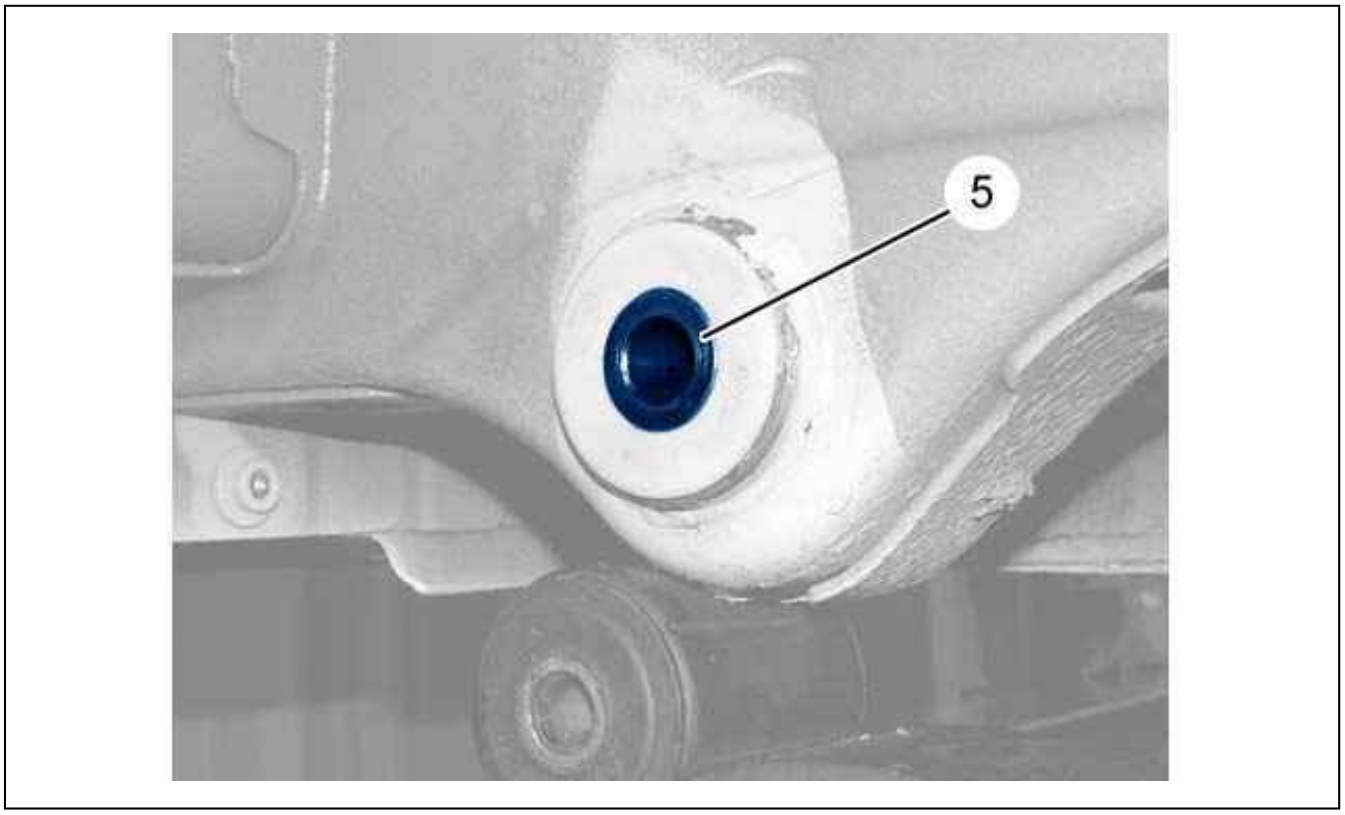

Figure : B3DP0G2D

Drive out the sleeve (5) ; Using a jet.

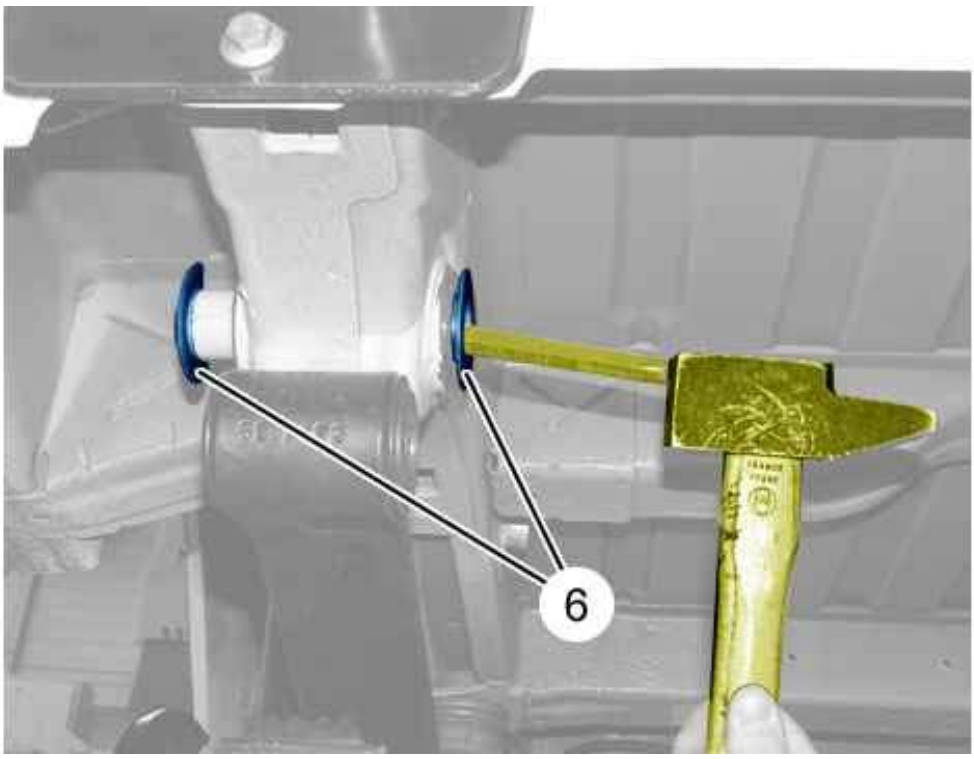

Figure : B3DP0G3D

Drive out the cup (6) (on each side).

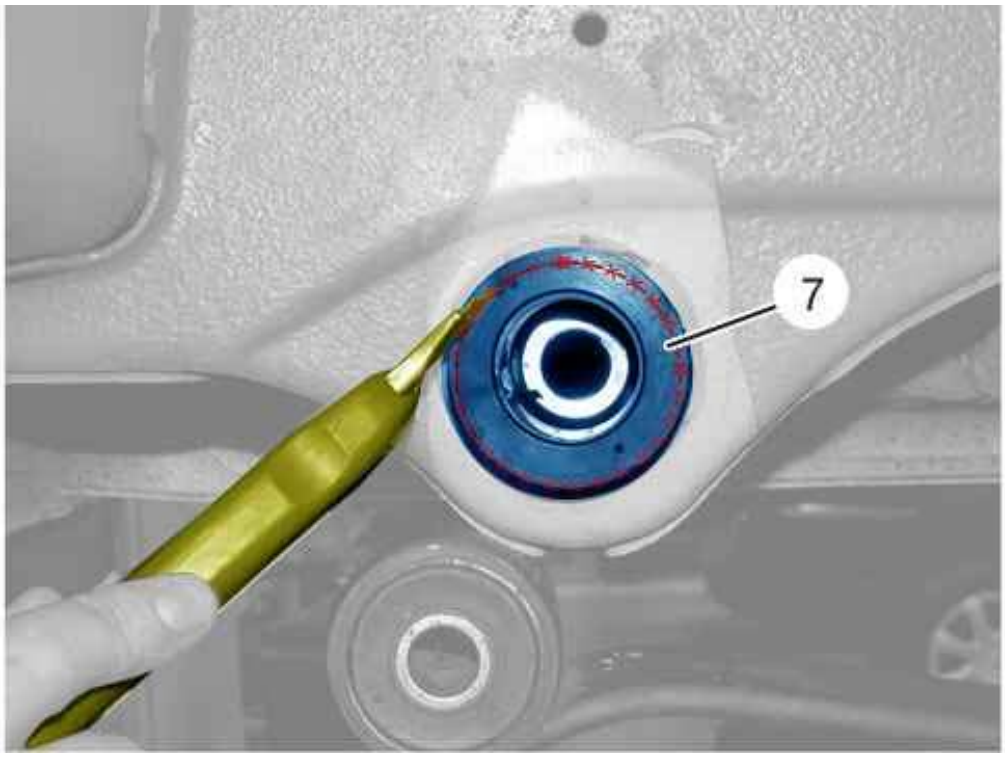

Figure : B3DP0G4D

Cut the collar of the rubber bush (7) (on each side).

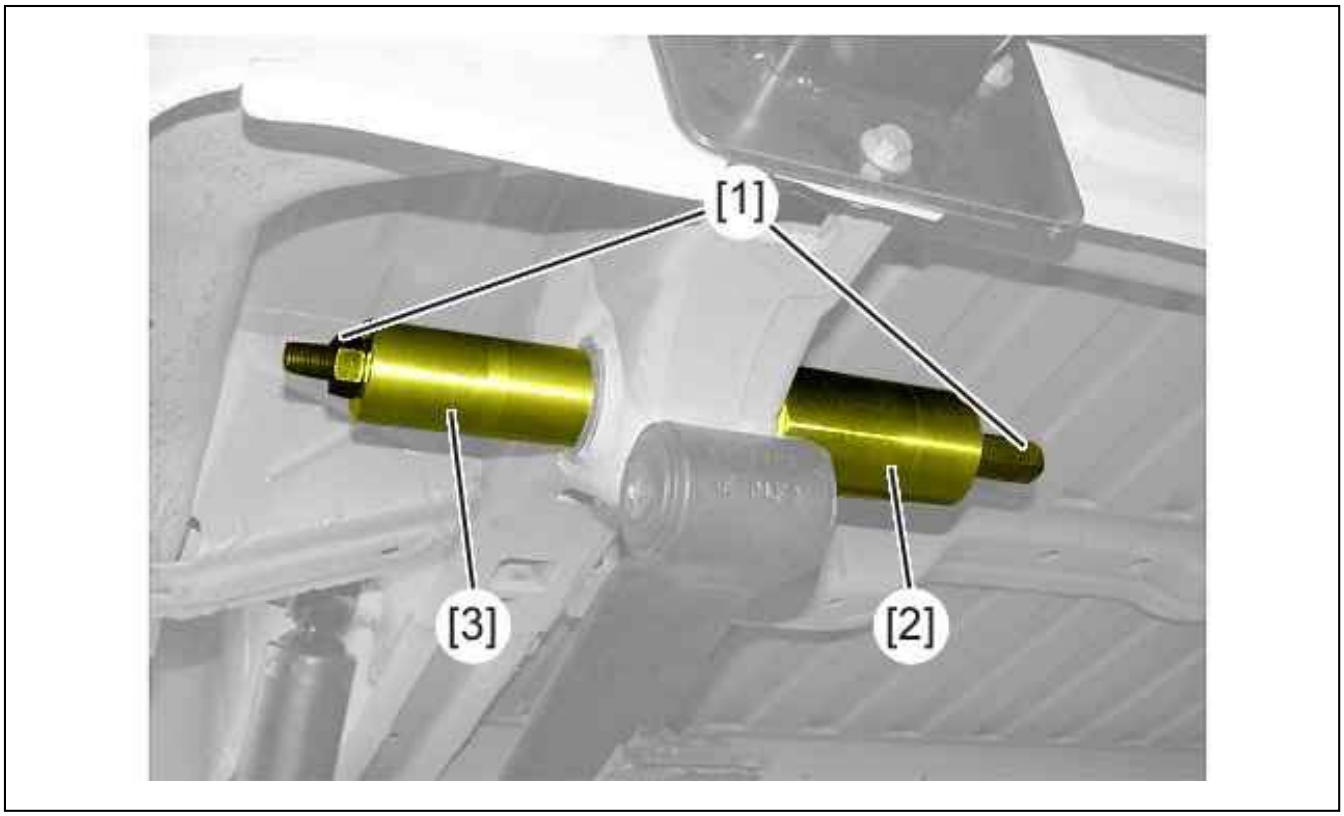

Figure : B3DP0G5D

Remove the rubber bushes (7) ; Using the tools [1], [2], [3].

3. Refitting

CAUTION : The components must be clean and free of any signs of abnormal wear or impacts; if any surface marking or paint flaking is visible, apply an anticorrosion paint.

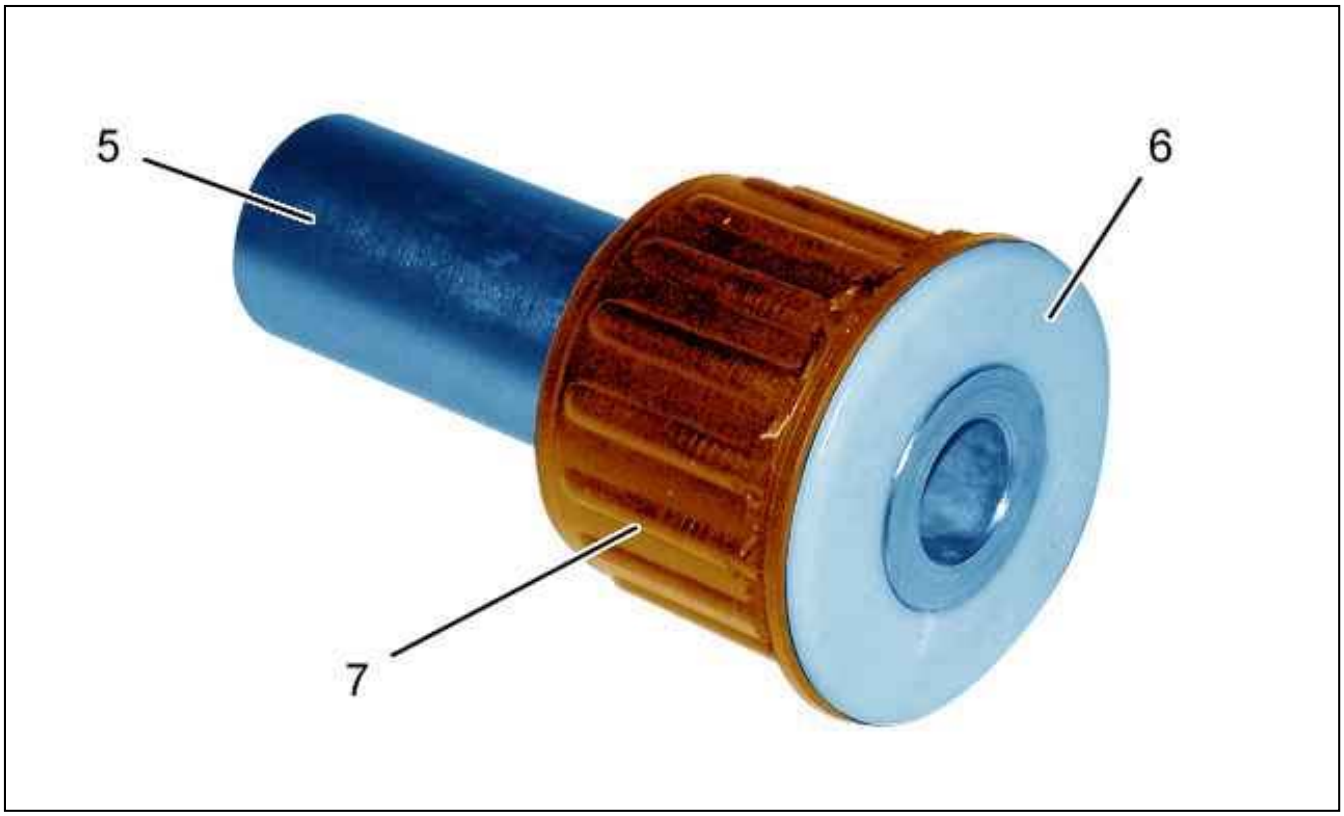

Figure : B3BP1G6D

Assemble the cup (6) - new rubber bush (7) assembly presenting the greatest resistance to assembly on the sleeve (5).
Pre-coat the rubber bushes (7) with grease used to fit the tyres.
Position the cup (6) - rubber bush (7) - sleeve (5) assembly on the vehicle (towards the outside).

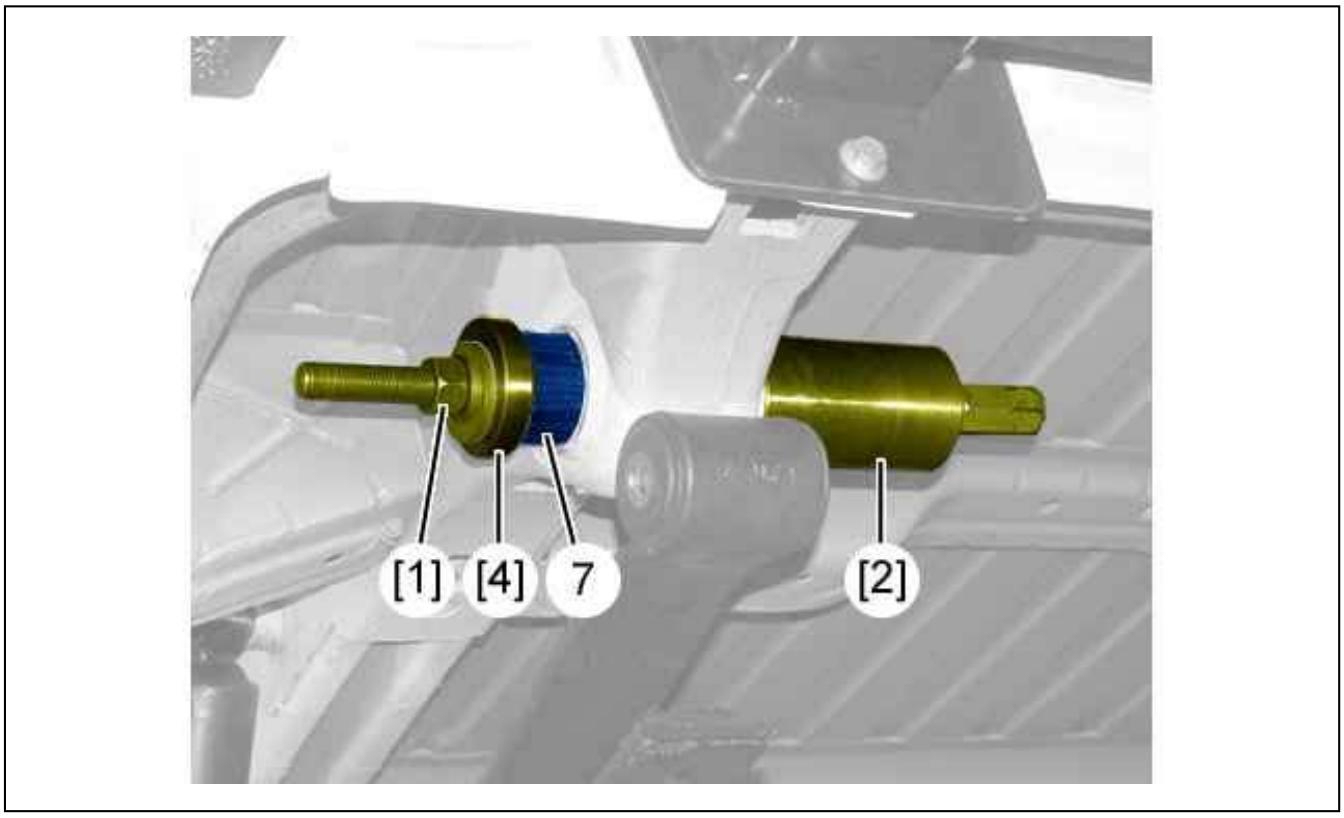

Figure : B3DP0G6D

Position the tools [1], [2], [4] on the vehicle.

N.B. : Put the tool [1] in place from the inner side.

Fit the cup (6) - rubber bush (7) - sleeve (5) assembly ; Using the tools [1], [2], [3].
Remove the tools [1], [2], [4].

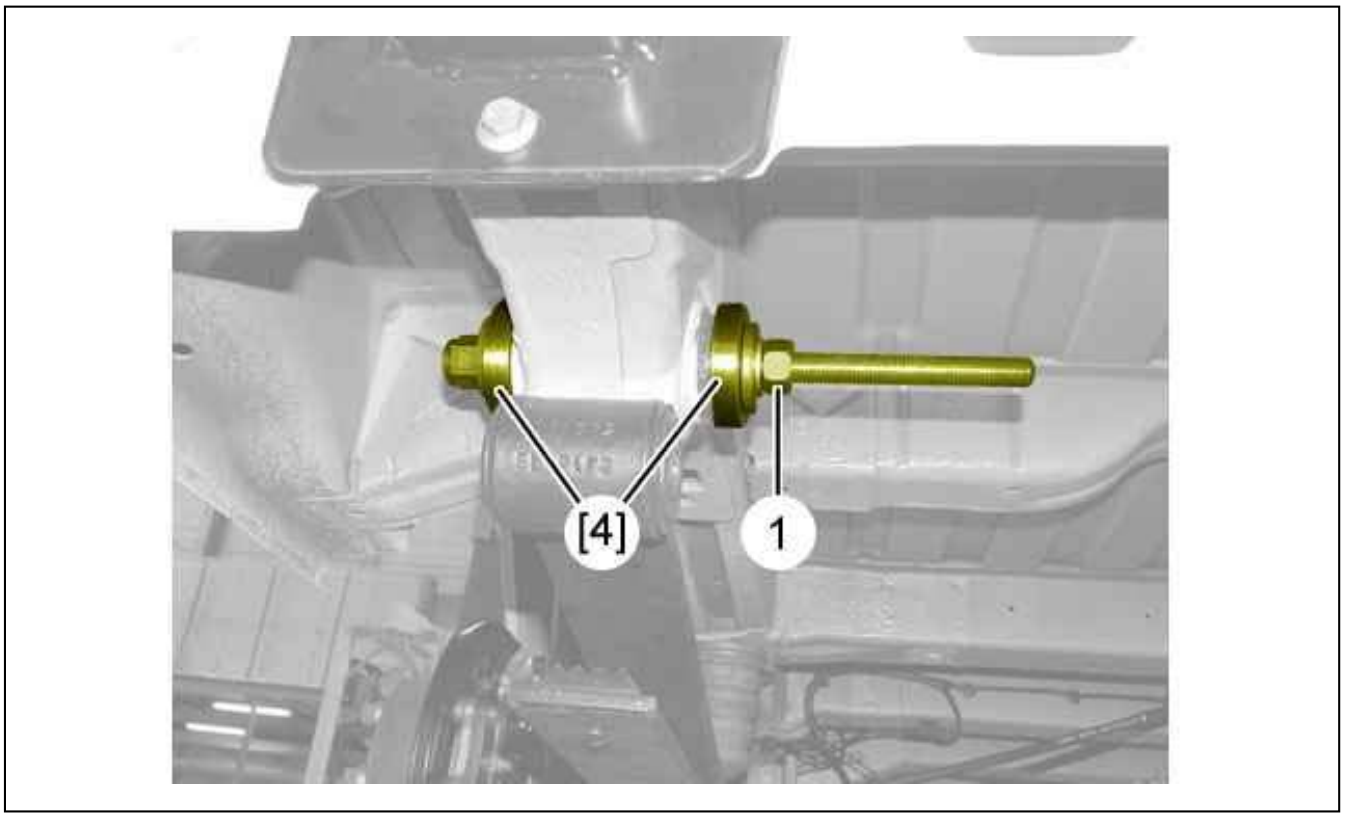

Figure : B3DP0G7D

Position the cup (6) - rubber bush (7) assembly (inner side).
Fit the cup (6) - rubber bushes (7) assembly to the limit of the vehicle's structure ; Using the tools [1], [4].

CAUTION : Check the condition of the structure ; If surface marking or paint flaking is visible, apply an anticorrosior paint.

Remove the tools [1], [4].
Position a lifting tool to support the rear suspension.
Remove bolts (1).
Lower the rear suspension by a few centimetres.
Refit :

- The suspension blade levers (4)
- The bolts (3)
- The nuts (2) (without tightening)

Raise the rear suspension by a few centimetres.
Refit :

- The bolt (1) (without tightening)
- The rear wheels

Return the vehicle to its wheels.
Place the vehicle at its reference ride height (see the relevant operation).

Tighten :

- The nuts (2) to 14,5 ± 1,2 daN.m
- Screw (1) to 14,5 ± 1,2 daNm

Tighten the wheel bolts .

Reconnect the battery negative terminal.

CAUTION : Perform the operations to be carried out following reconnection of the battery.

TIGHTENING TORQUES : DRIVESHAFTS

1. Recommendation

CAUTION : Tighten the driveshaft nuts ; With the help of a torque spanner.

2. Tightening torques : Nut ; Driveshaft bearing

Vehicles	Nut	Front driveshaft bearing
C-ZERO	16 daNm	-
C1	21,6 daNm	-
C2	24,5 daNm	1 daNm
C3	24,5 daNm	2 daNm
C3 Pluriel		
C3 (A51)	24,5 daNm (30 mm spanner)	2 daNm
	32,5 daNm (35 mm spanner)	
C3 (Ai51 Mercosur)	24,5 daNm (30 mm spanner)	2 daNm
	32,5 daNm (35 mm spanner)	
DS3	24,5 daNm (30 mm spanner)	2 daNm
	32,5 daNm (35 mm spanner)	
C-ELYSEE	24,5 daNm	2 daNm
C-ELYSEE (China)	24,5 daNm	2 daNm
DS5	31,2 daNm	2 daNm
DS5 (B81 China)	31.2 daNm	2 daNm
C4	32 daNm	1,8 daNm
C4 (B7)	30,5 daNm	2 daNm
C4 I (B73 China)	32,5 daNm	2 daNm
C4 (B73 Russia)	32,5 daNm	2 daNm
C4 (B73 Mercosur)	32,5 daNm	2 daNm
C3 Aircross (Ai58 Mercosur)	24,5 daNm (30 mm spanner)	2 daNm
	32,5 daNm (35 mm spanner)	
C3 Picasso (Ai58 Mercosur)	24,5 daNm (30 mm spanner)	2 daNm
	32,5 daNm (35 mm spanner)	
C3 Picasso	32,5 daNm	2 daNm
C4 PICASSO		
C4 PICASSO (B78)	28,5 daNm	
XSARA PICASSO	32,5 daNm	
CITROEN C5 (X3), (X4)		
CITROEN C5 (X7), (XW)		
Berlingo	31,2 daNm	2 daNm
C6	34,5 daNm	2 daNm
C8		

DISPATCH	34,5 daNm	2 daNm
C15	Pre-tighten to 10 daNm	2 daNm
	Angular tightening of 60°	
NEMO	Pre-tighten to 7 daNm	-
	Angular tightening of 55°	-
RELAY	Pre-tighten to 15 daNm	-
	Angular tightening of 35°	-

3. Tightening torques : 4 wheel drive transmission

Vehicles	Transverse driveshaft nut (Front / Rear)	Longitudinal bearing bolt	Longitudinal driveshaft nuts on rear axle controlled clutch
C-Crosser	16 daNm	4 daNm	5,4 daNm
C4 Aircross	14,4 daNm (Nut with pin)	4 daNm	5,4 daNm
	27 daNm (Nut without pin)		

4. Tightening torques : Hybrid vehicles

Vehicles	Front driveshaft nut	Rear driveshaft nut	Front driveshaft bearing	Rear driveshaft bearing
DS5	32,5 daNm	34,5 daNm	2 daNm	1 daNm

REMOVING - REFITTING : DRIVESHAFTS

ESSENTIAL : Observe the safety and cleanliness recommendations .

1. Tooling

tool	Reference	Designation
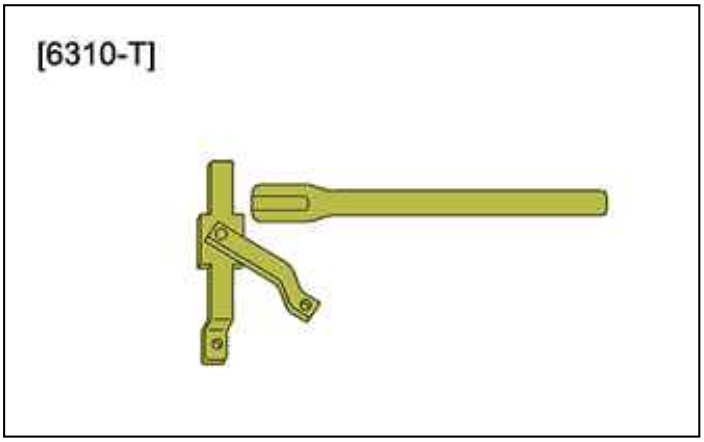 Figure : E5AB06YT	[6310-T]	hub immobilising tool
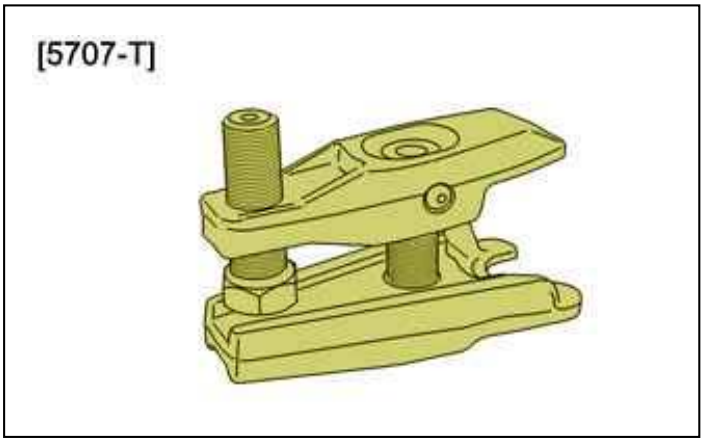 Figure : E5AG05GT	[5707-T]	ball-joint extractor
	[5709-T.E]	locking punch

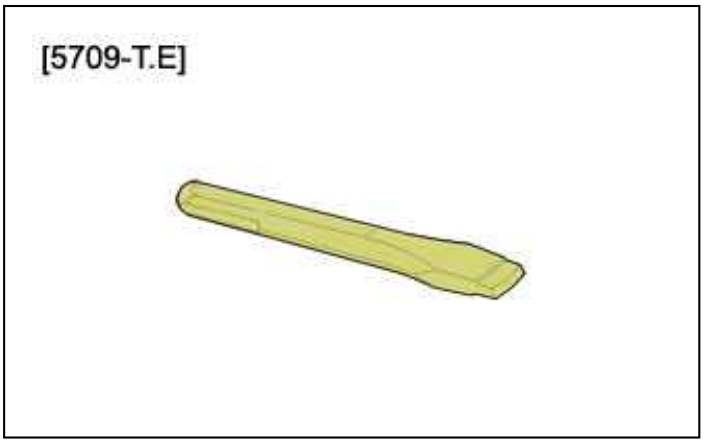

Figure : E5AB0EHT

2. Removing

Place the vehicle on a 2-post lift.
Slacken the front wheel bolts.
Disconnect the battery negative terminal.
Lift and support the vehicle.
Remove :

- The protective panel under the engine
- The right-hand protector under the engine
- The front wheel bolts
- The front wheels

Drain gearbox (see the relevant operation).

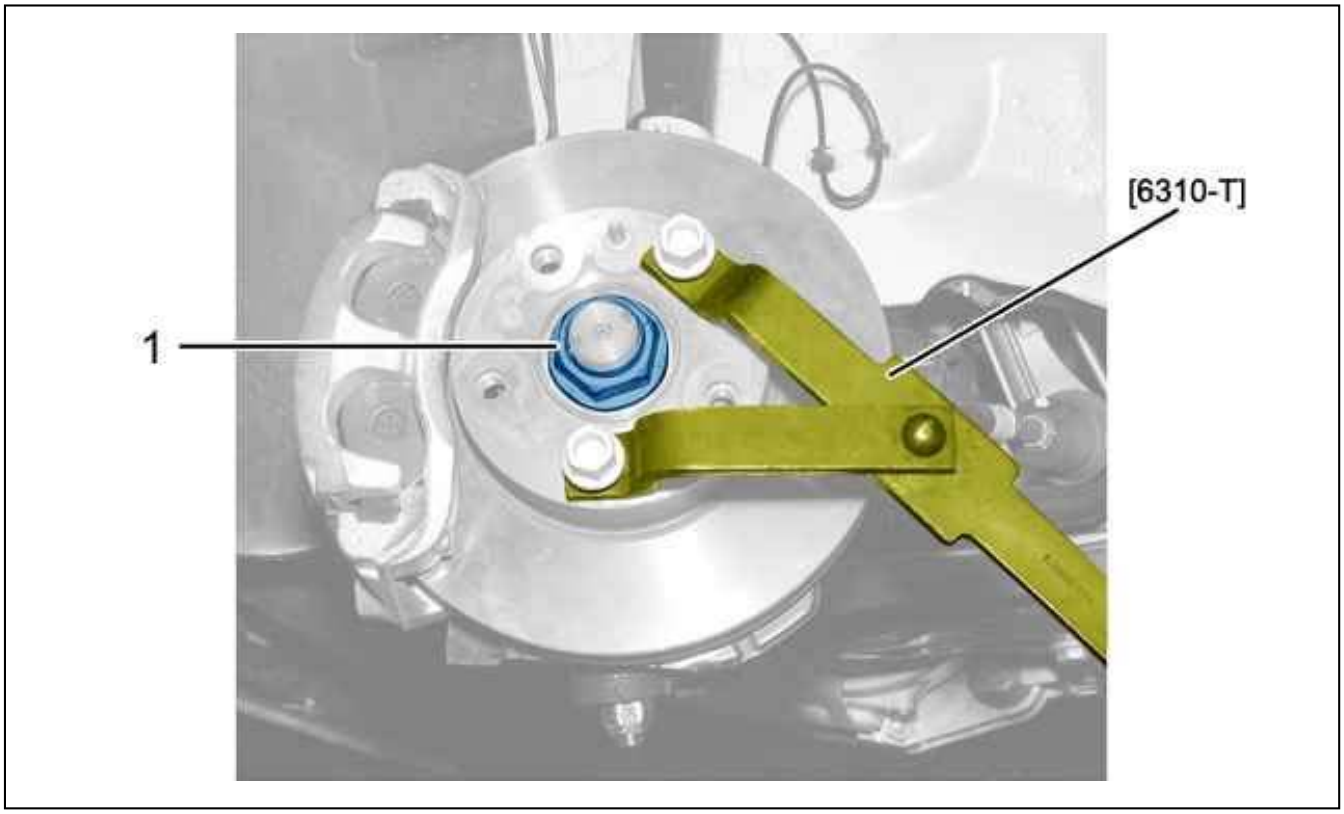

Figure : B2FG036D

Unlock the nut (1).
Fit the tool [6310-T].
Remove :

- The nut (1)
- The tool [6310-T]

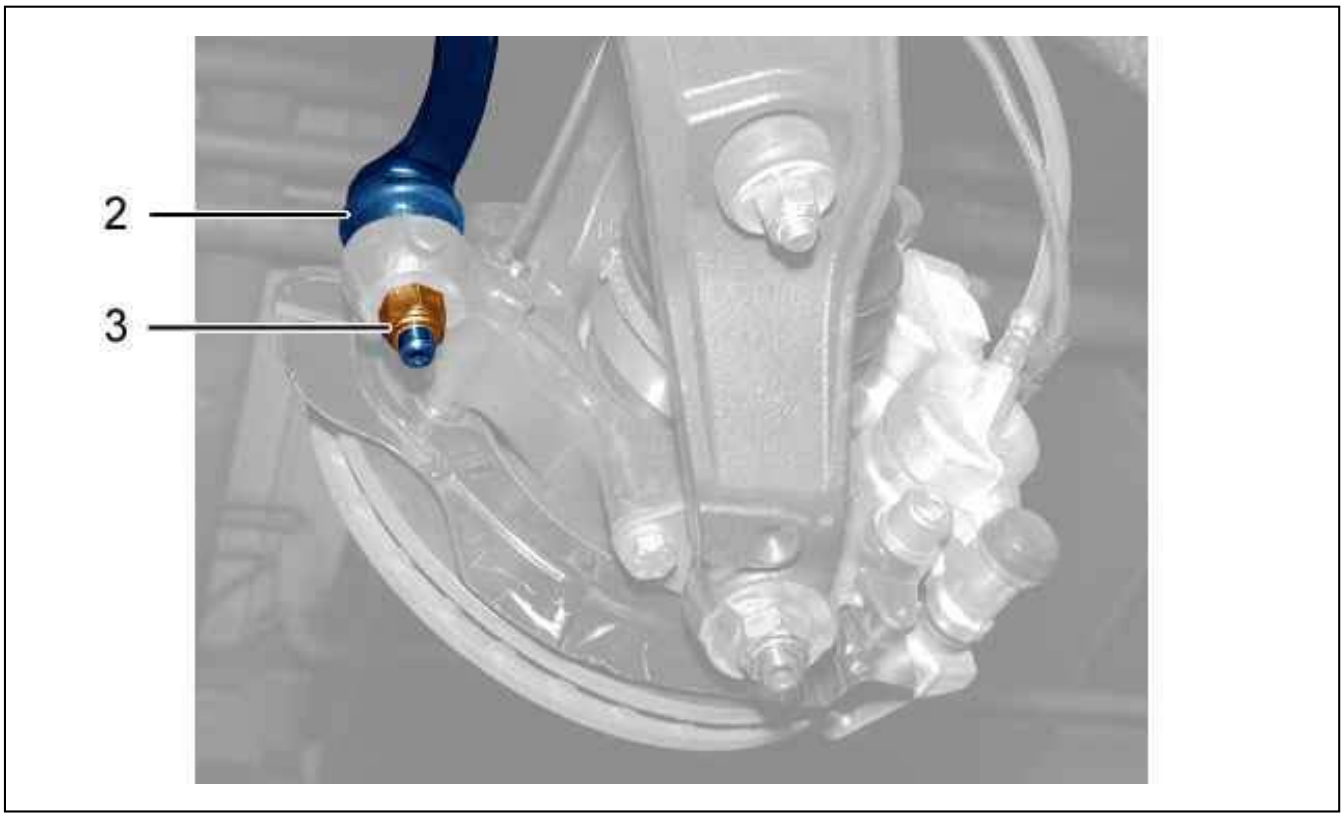

Figure : B3FP7NHD

Remove the nut (3).
Uncouple the steering ball-joint (2) ; Using tool [5707-T].

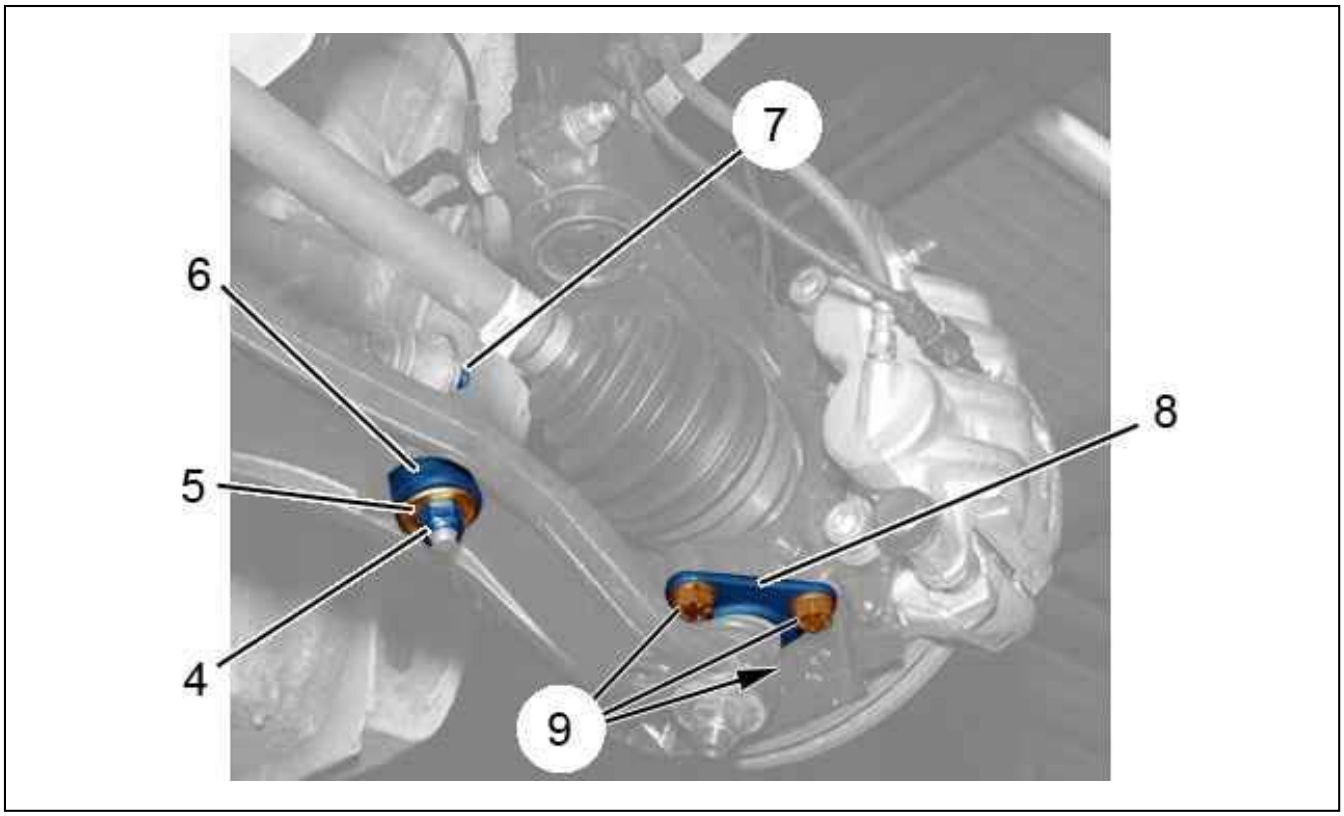

Figure : B3FP7NJD

Remove :

- The nut (4)
- The washer (5)
- The silentblock (6)

Unscrew nut (7).
Remove the 3 bolts (9).
Move the hub away from the ball joint housing (8) to disengage the driveshaft .

2.1. On the left-hand side

Remove the driveshaft .

2.2. On the right-hand side

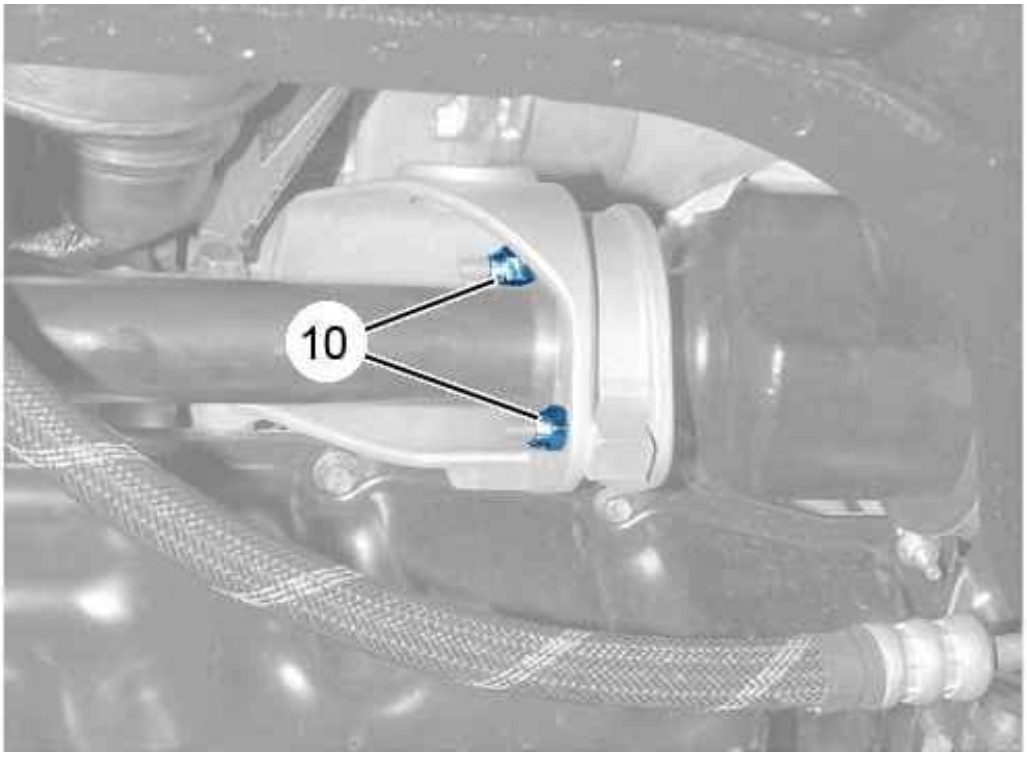

Figure : B2FP06UD

Unscrew the nuts (10).
Remove the driveshaft .

3. Refitting

CAUTION : Always replace the driveshaft seals during each operation (see the relevant operation).

Coat the interval between the lips of the driveshaft seals with grease.

3.1. On the right-hand side

Engage :

- The driveshaft in the driveshaft bearing
- The splines of the driveshaft in the differential
- The splines of the driveshaft in the hub of the right-hand wheel

Tighten the nuts (10).

3.2. On the left-hand side

Engage :

- The splines of the driveshaft in the differential
- The splines of the driveshaft in the hub of the left-hand wheel

3.3. Refitting (continued)

Couple the ball joint housing (8) and the hub .
Refit :

- The 3 bolts (9) ; Tighten to 11,5 ± 0,4 daN.m
- The silentblock (6)
- The washer (5)

- The nut (4) ; Tighten to 5,6 ± 0,5 daN.m

Retighten the nut (7) ; Tighten to 5,6 ± 0,5 daN.m.

N.B. : Use new nuts (3) and (1).

Couple the steering ball joint (2) to the hub .
Refit :

- The nut (3) ; Tighten to 8 ± 0,7 daN.m
- The tool [6310-T]
- The nut (1) ; Tighten to 15 ± 1,5 daN.m ; Angular tightening to 35°

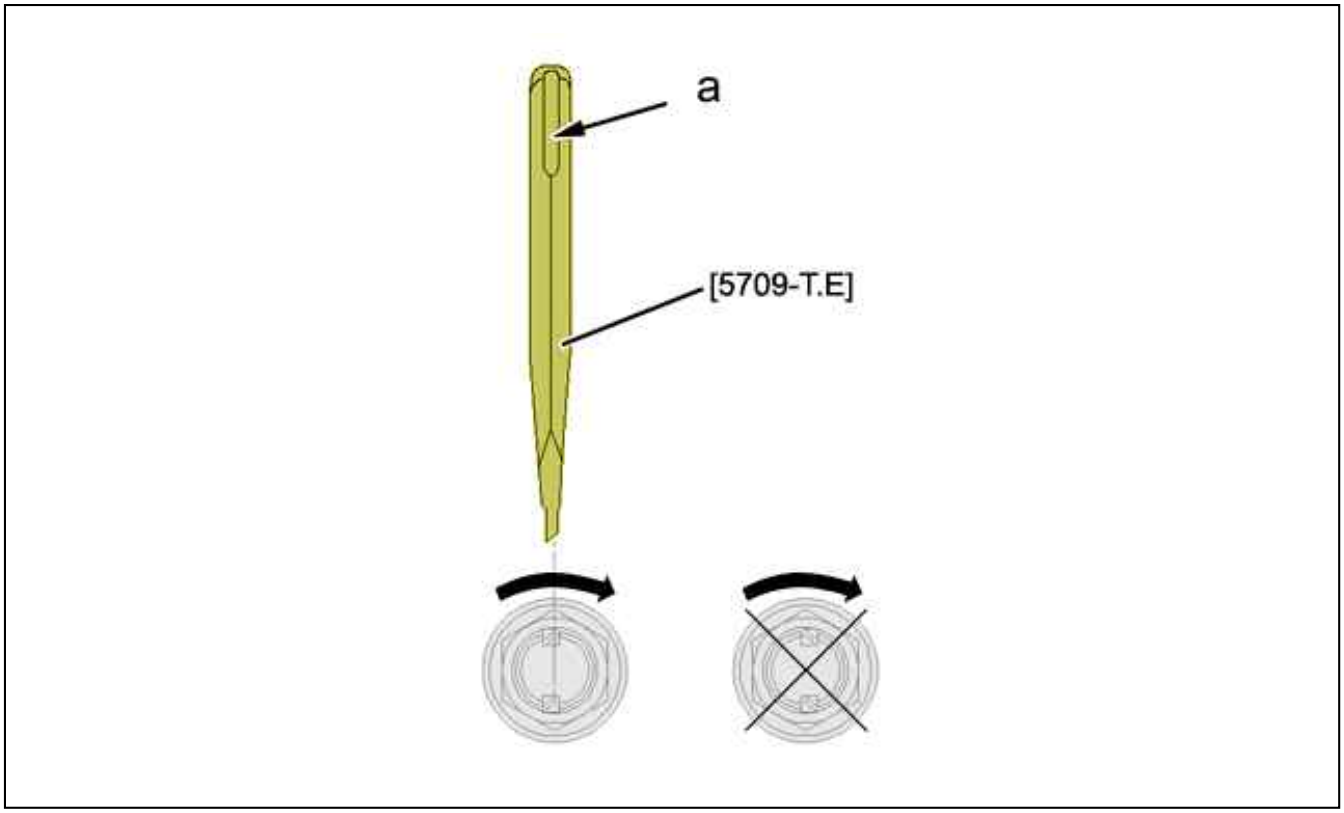

Figure : B2FG039D

Lock the transmission nut using the tool [5709-T.E].
The flat side "a"of the tool [5709-T.E] must always be towards the outside.

ESSENTIAL : The nut collar must be locked in the opposite direction to tightening.

Remove the tool [6310-T].
Refit :

- The front wheels
- The front wheel bolts
- The right-hand protector under the engine
- The protective panel under the engine

Return the vehicle to its wheels.
Tighten the front wheel bolts .
Fill gearbox with oil and ensure correct level (see the relevant operation).

CAUTION : Perform the operations to be carried out following reconnection of the battery.

Reconnect the battery.

REPLACEMENT : DRIVESHAFT GAITERS

ESSENTIAL : Observe the safety and cleanliness recommendations .

1. Tooling

tool	Reference	Designation
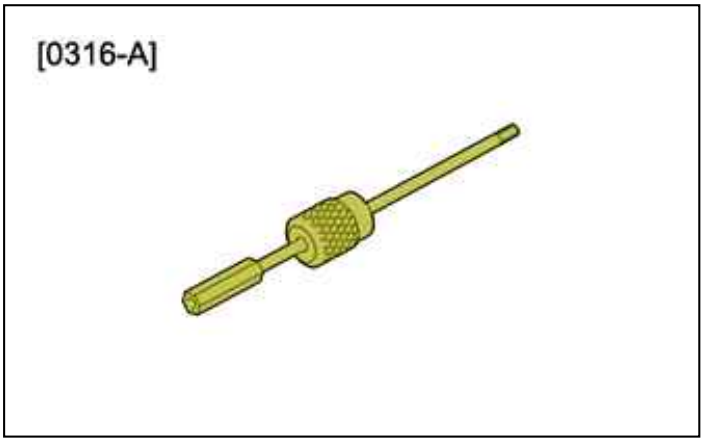 Figure : E5AB0NET	[0316-A]	inertia extractor
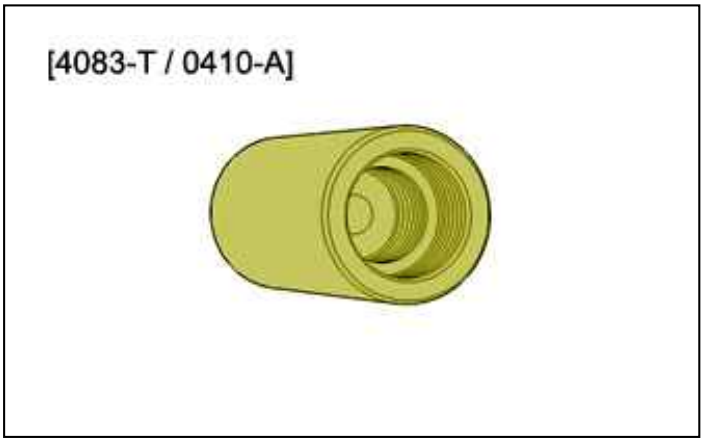 Figure : E5AB0IBT	[4083-T] [0410-A]	Stub axle removal threaded sleeve
	[0409]	Pliers for fitting driveshaft gaiter clips

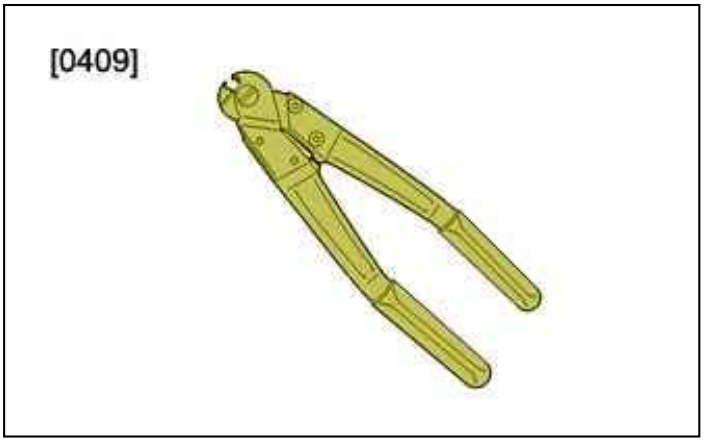 Figure : E5AB0ICT		
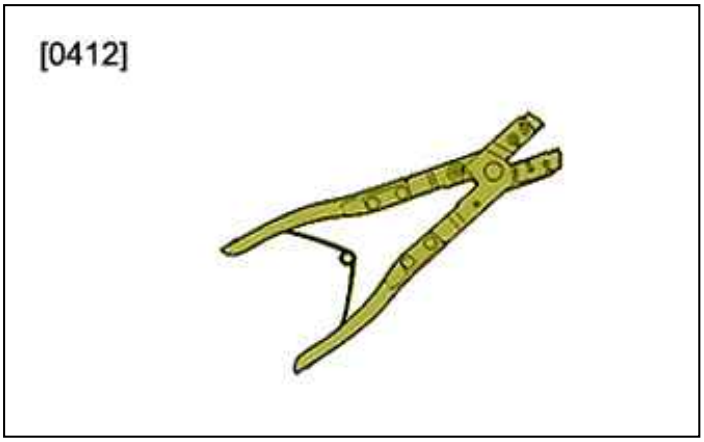 Figure : E5AH00BT	[0412]	hose clip pliers OETIKER
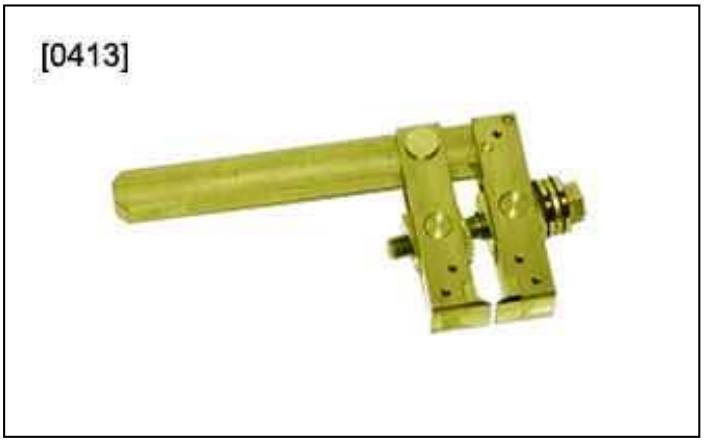 Figure : E5AH00CT	[0413]	Pliers for wing clips

2. Identification

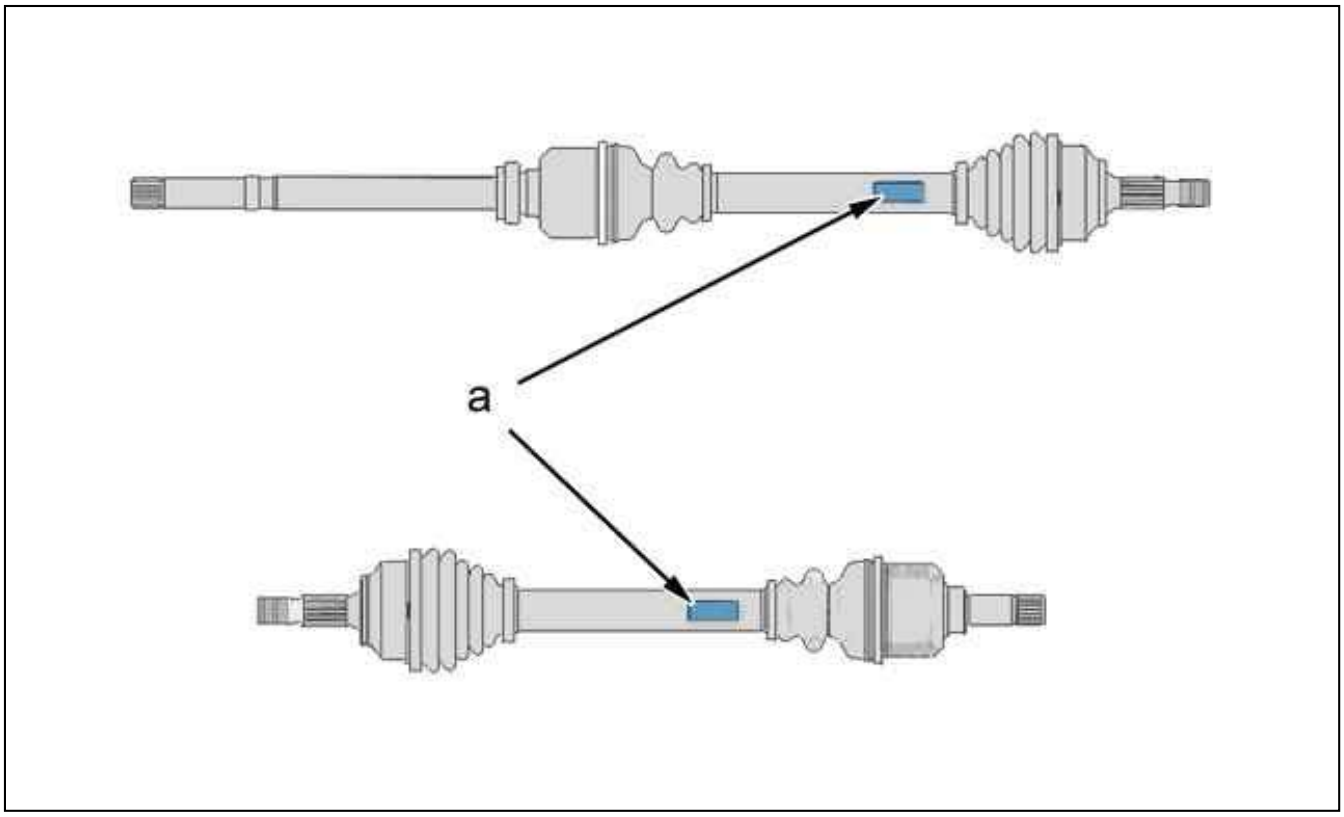

Figure : B2FH00SD

The drive shafts are identified by a label stuck to the shaft (at "a") containing : The supplier reference.
List of suppliers :

- GKN
- PSA
- NTN

3. Preliminary operations

N.B. : The ABS crowns are discontinued (the function fulfilled by the crowns is transferred to the front wheel bearings).

Remove the drive shafts.
Support the drive shaft in a vice fitted with soft jaws.

N.B. : Before removal : Mark the positions of the driveshaft gaiters.

4. Replacement : Wheel end gaiter

CAUTION : Always replace the clips and circlips that have been removed.

4.1. PSA and NTN driveshafts

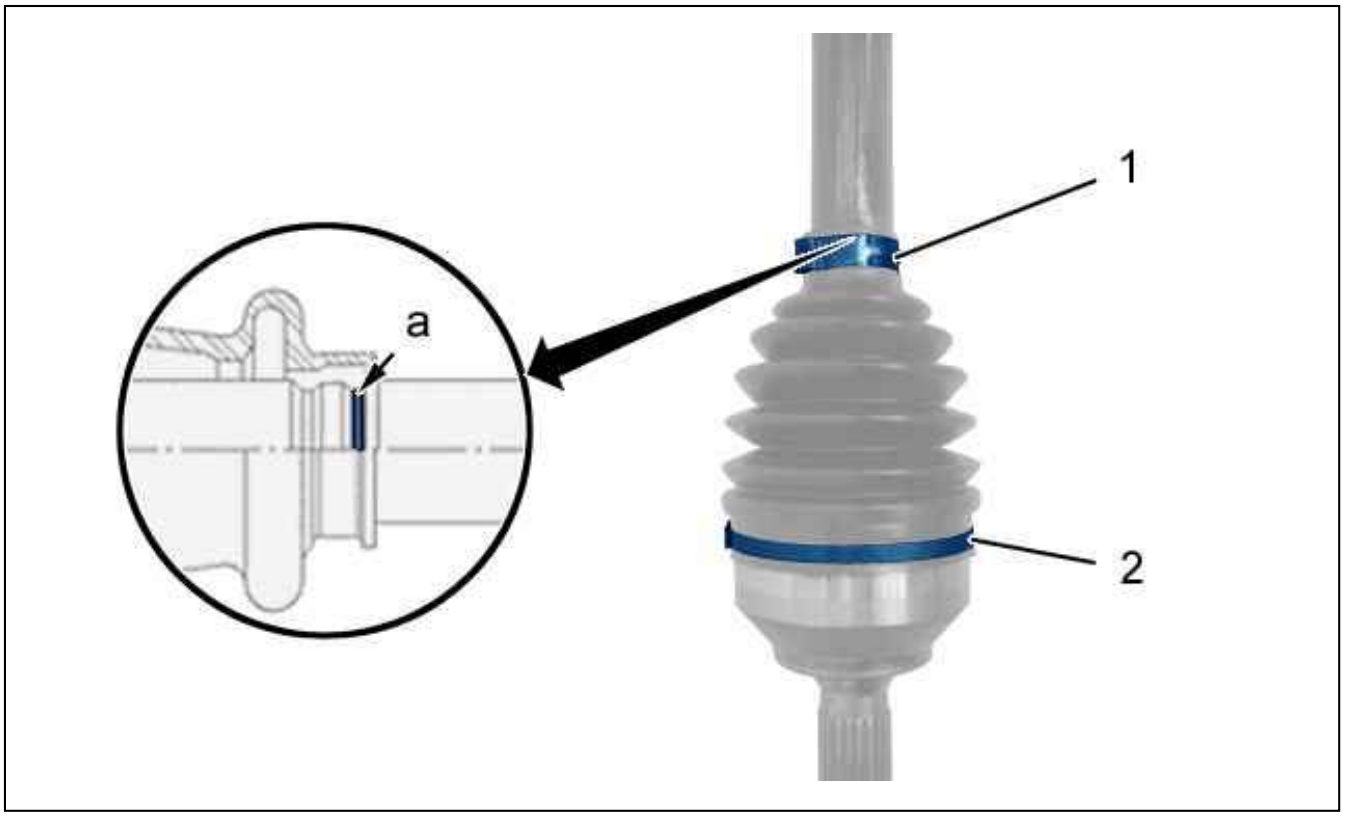

Figure : B2FH002D

Remove the clips (1) and (2) ; Using a hacksaw.

N.B. : Mark the gaiter position on driveshafts not having position grooves at "a".

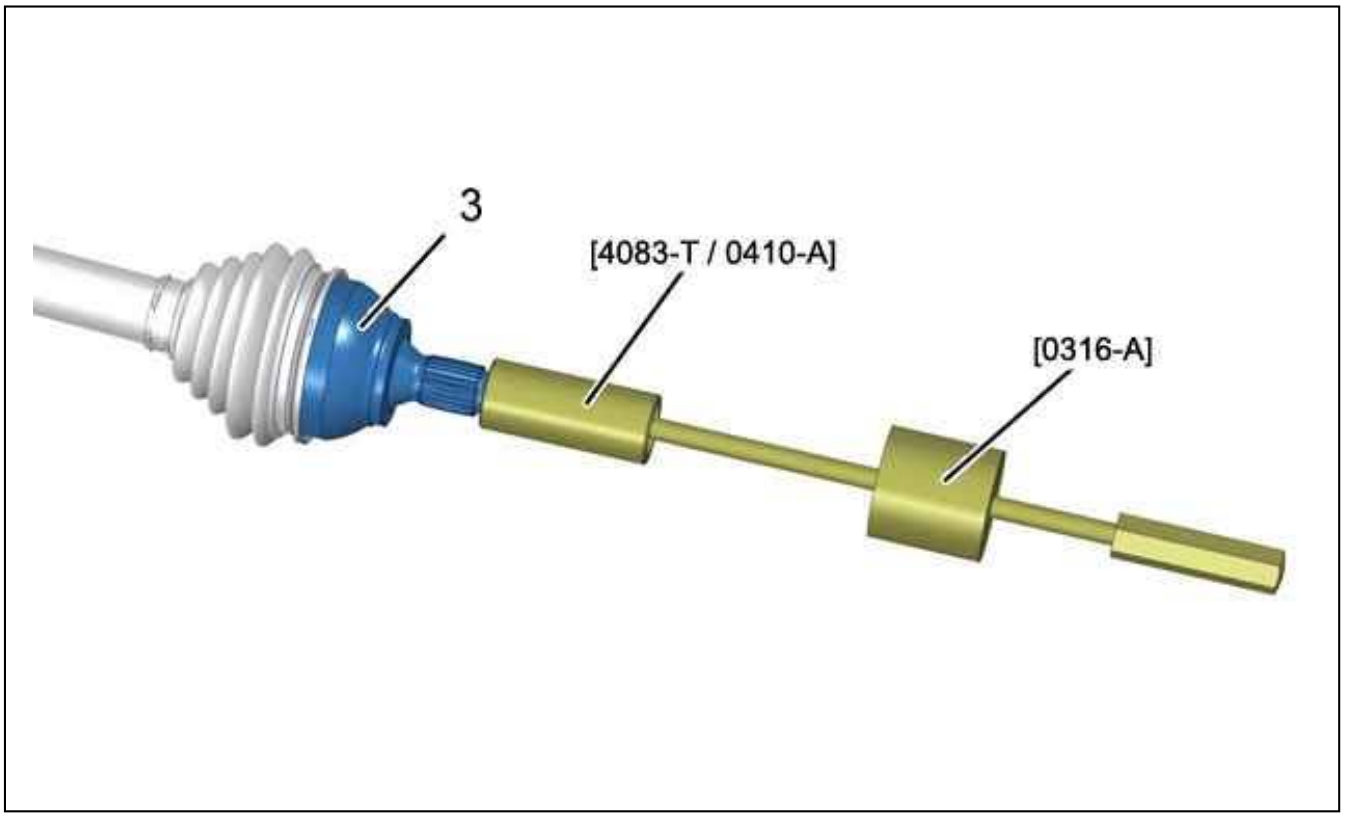

Figure : B2FH02QD

Remove the housing (3) ; Using the tools [0316-A], [4083-T / 0410-A].

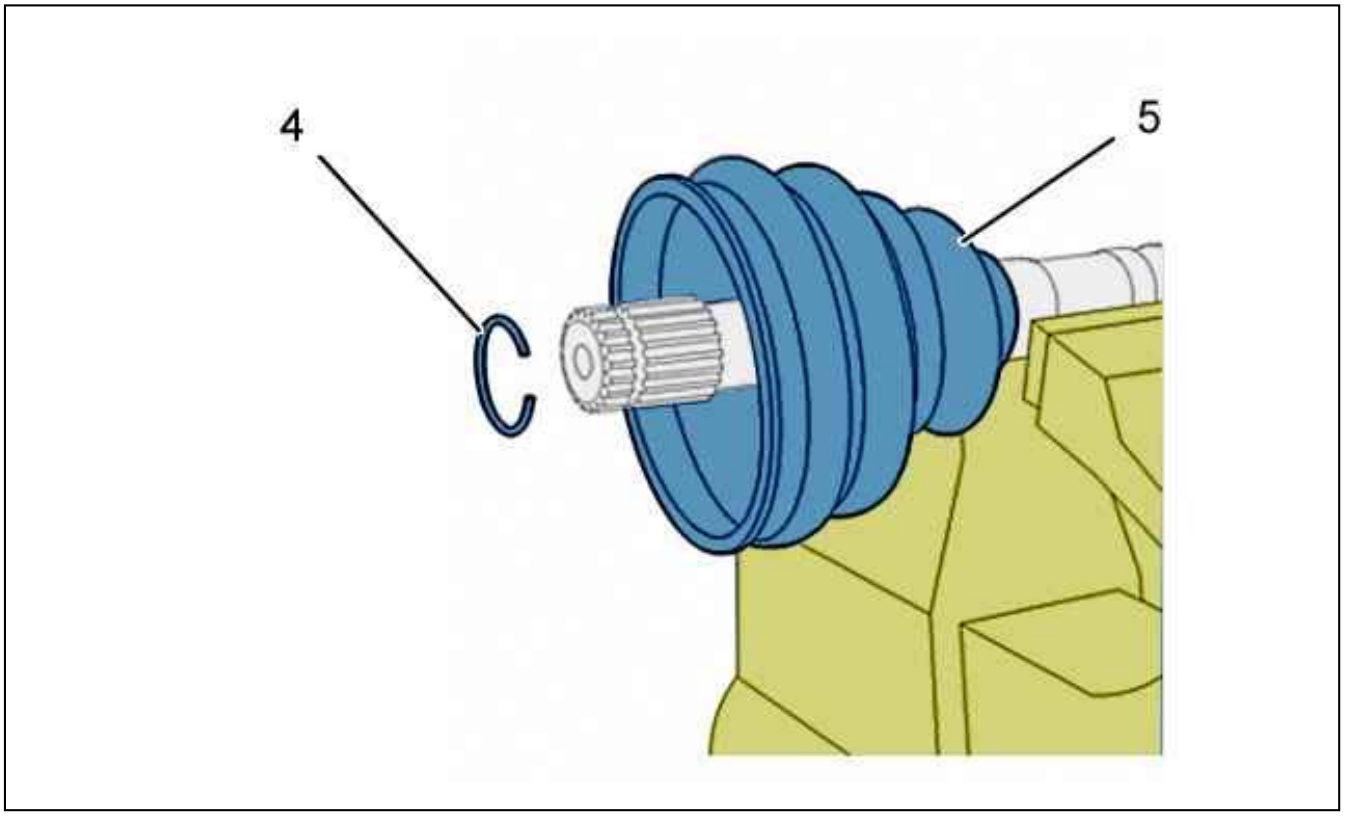

Figure : B2FH004D

Remove :

- The stop ring (4)
- The drive shaft gaiter (5)

Refit :

- The drive shaft gaiter (5) (new)
- The stop ring (4) (new)

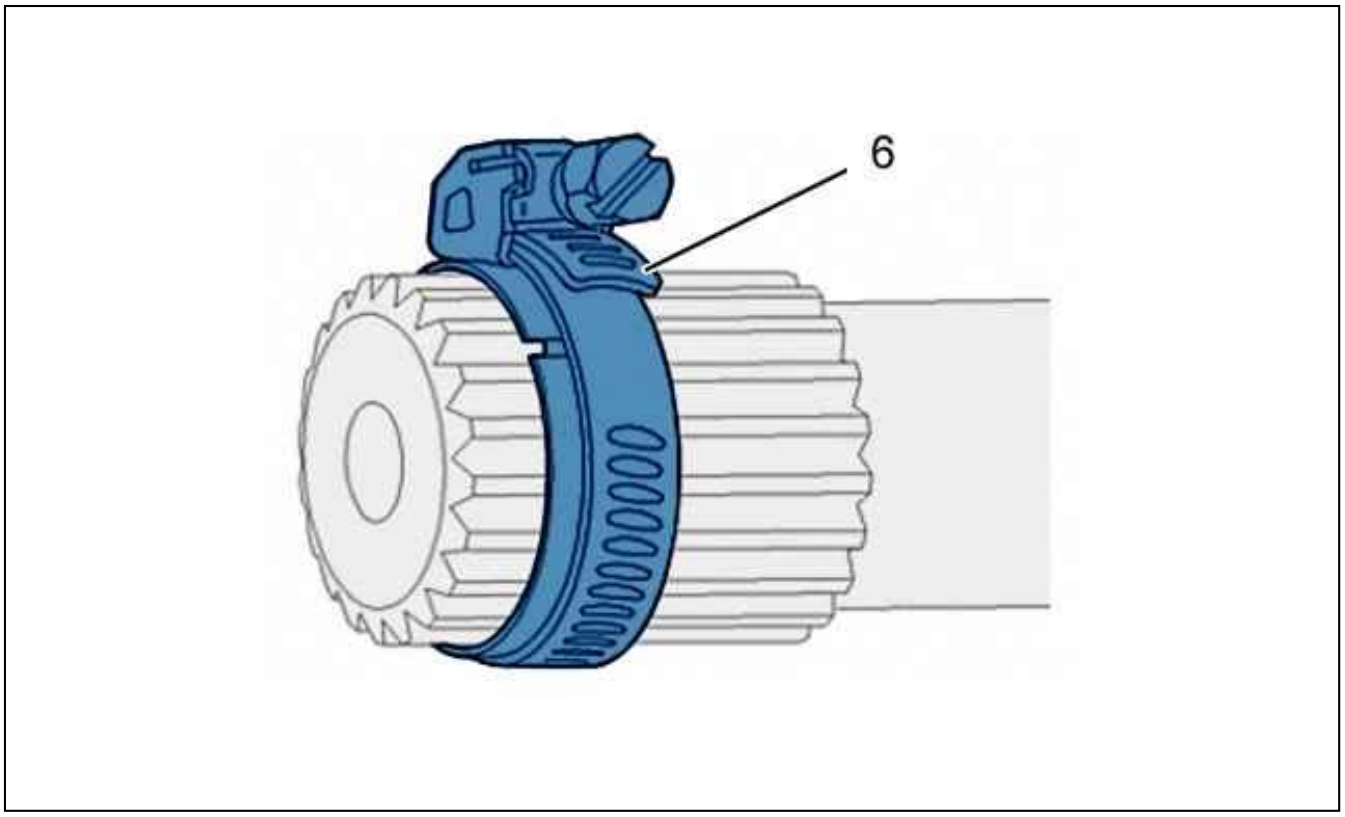

Figure : B2FH005D

Fit a clip (6) on the stop ring to facilitate force-fitting of the housing (3).

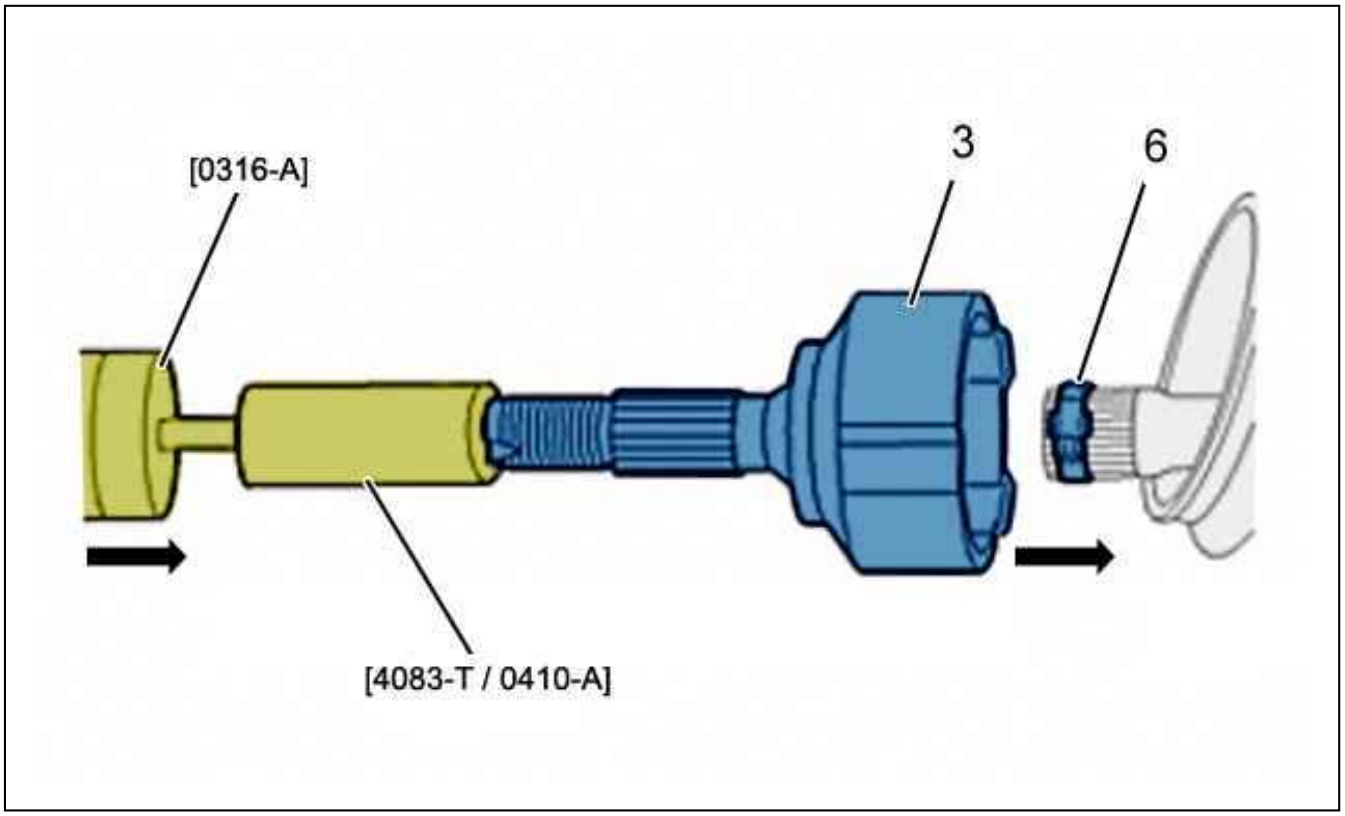

Figure : B2FH02RD

Refit the housing (3) to the shaft ; Using the tools [0316-A], [4083-T / 0410-A].
Remove the collar (6).

Fill the gaiter with all the grease available in the repair kit.
Refit the gaiter (5) on the housing (3).

CAUTION : Pay attention to the location of the gaiter on the shaft: gaiter lip in the groove "a" or on the mark made when removing.

Refit and tighten the clips (1) and (2).

4.2. Driveshaft GKN

N.B. : The driveshaft bowl on the wheel side cannot be removed ; The replacing of a wheel-end driveshaft gaiter necessitates the removal of the gearbox-end gaiter.

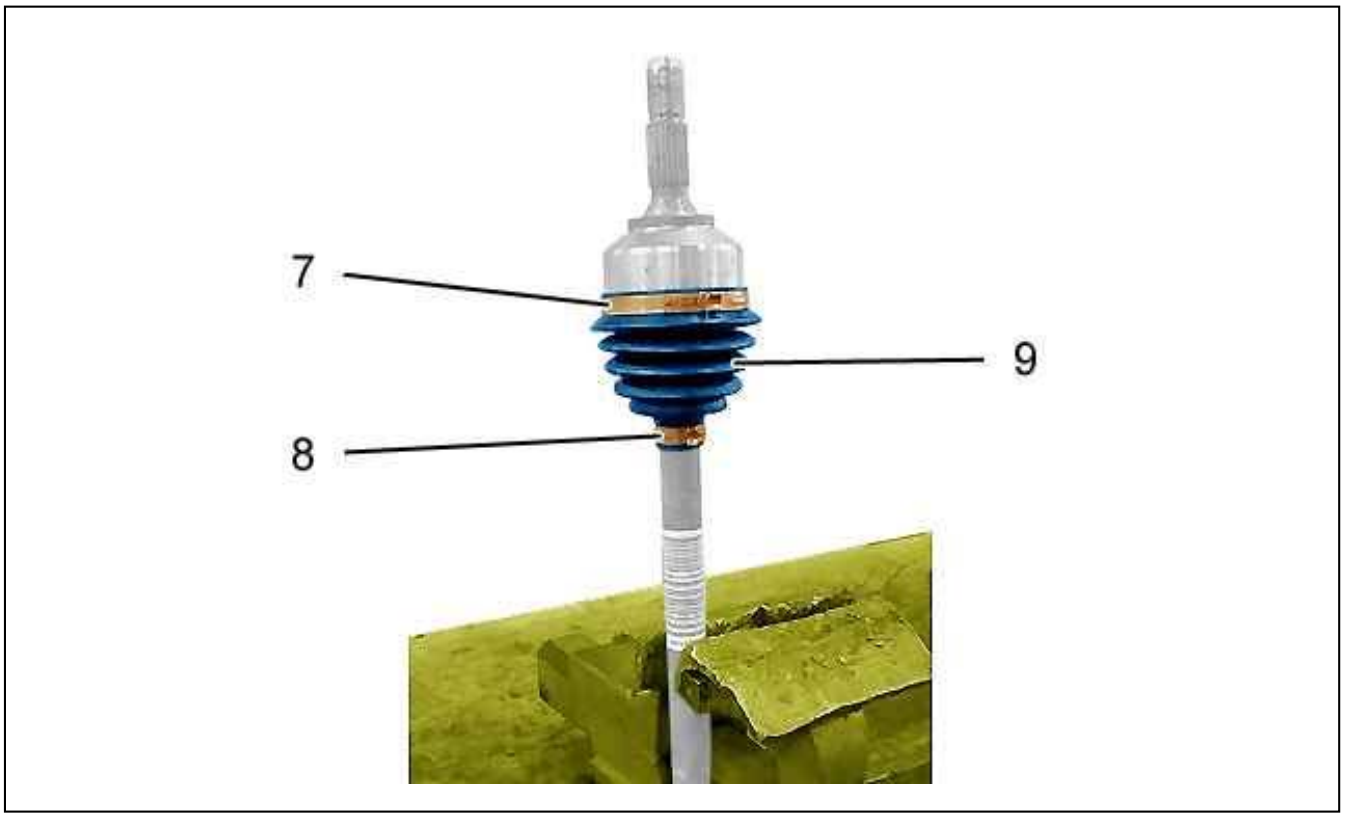

Figure : B2FH00QD

Remove :

- The drive shaft gaiter (on the gearbox side)
- The clips (7), (8)
- The drive shaft gaiter (9)

Refit the driveshaft gaiter (9) on the driveshaft.
Fill the gaiter with all the grease available in the repair kit.
Refit :

- The collars (7) and (8)
- The drive shaft gaiter (on the gearbox side)

5. Replacement : Gearbox end gaiter

CAUTION : Always replace the clips and circlips that have been removed.

5.1. GKN and NTN driveshafts

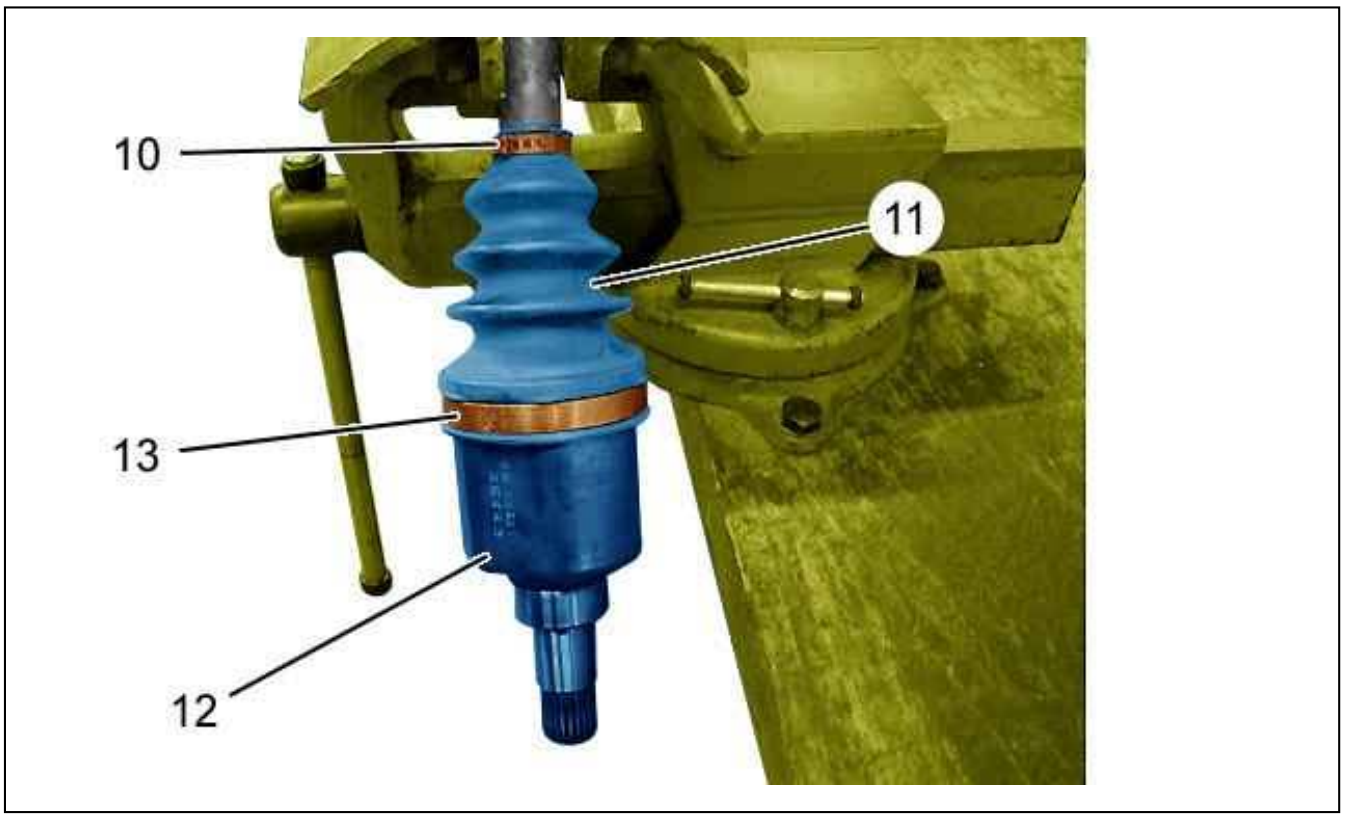

Figure : B2FH011D

Remove the clips (10), (13).
Move aside the driveshaft gaiter (11).
Remove vertically the spider ecu(12).
Remove as much grease as possible from inside the gaiter .

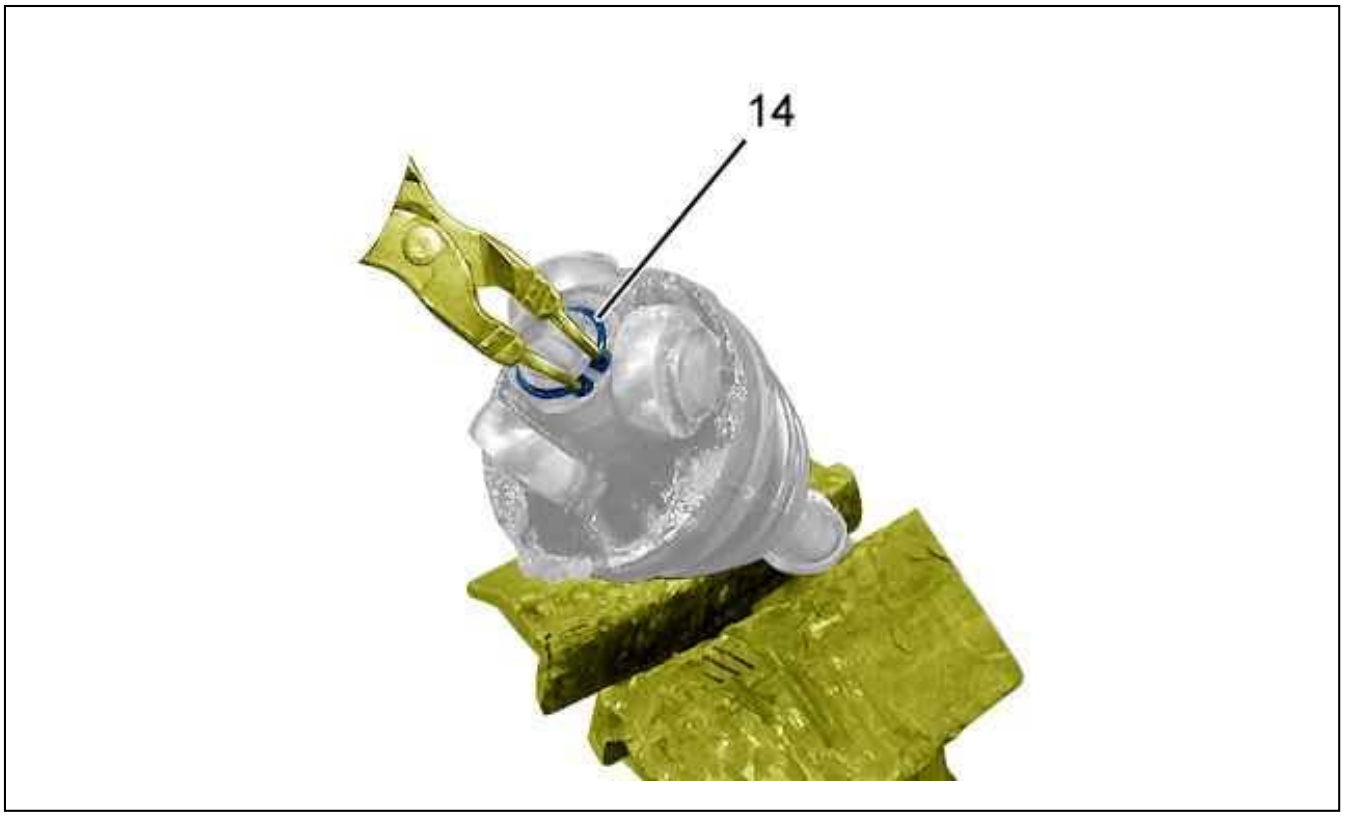

Figure : B2FH012D

Remove the excess grease from the gaiter and on the tripod.
Remove circlip (14).

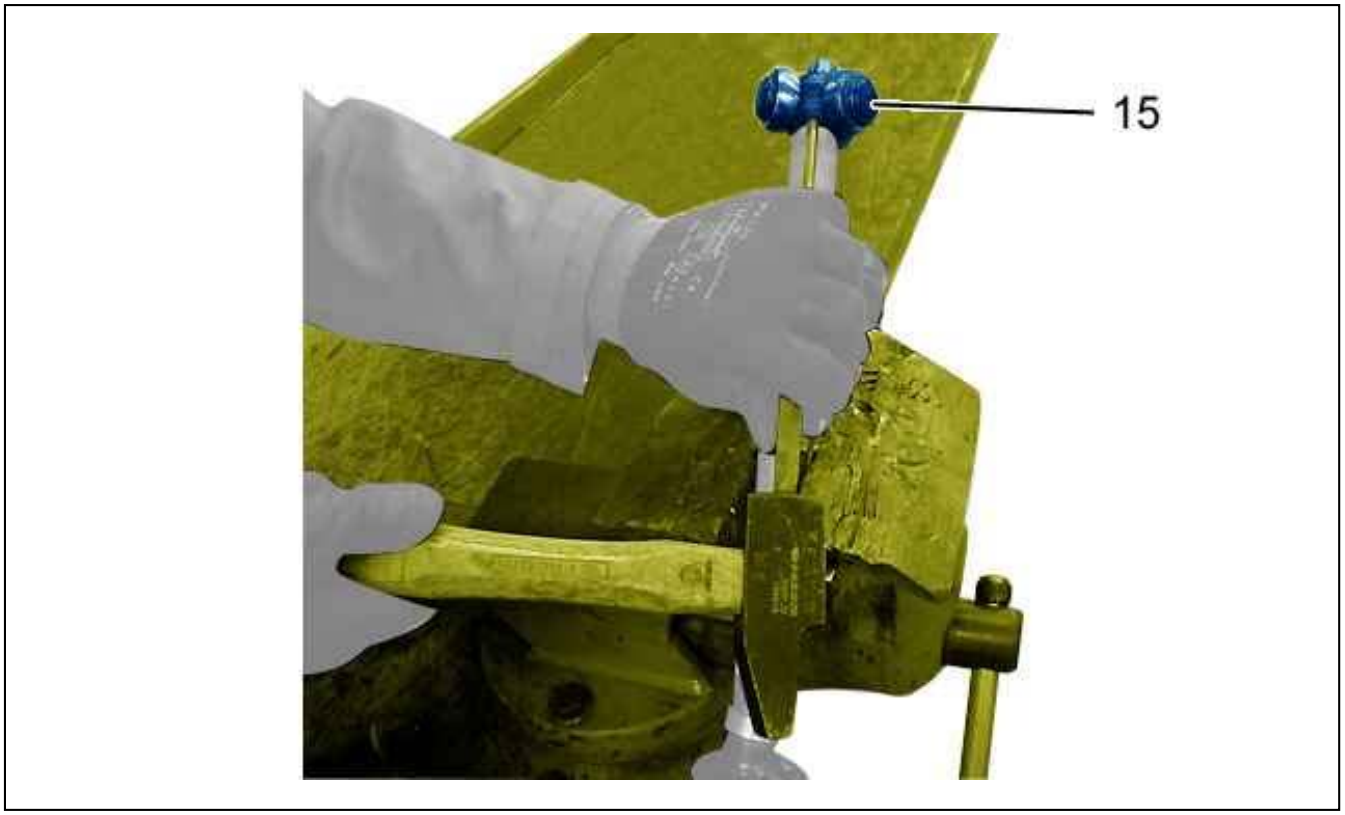

Figure : B2FH013D

Remove the tripod (15) ; Using a hammer and a pin punch.

Remove the driveshaft gaiter (11).
Refit the driveshaft gaiter (11) on the driveshaft (new).
Refit :

- The tripod (15)
- The circlip (14)

Fill the gaiter with all the grease available in the repair kit.
Refit :

- The tripod housing (12)
- The collars (10) and (13)

5.2. Driveshaft PSA

N.B. : At the gearbox end, as the spider cannot be removed, replacement of the gaiter is only possible following removal of the seal at the wheel end.

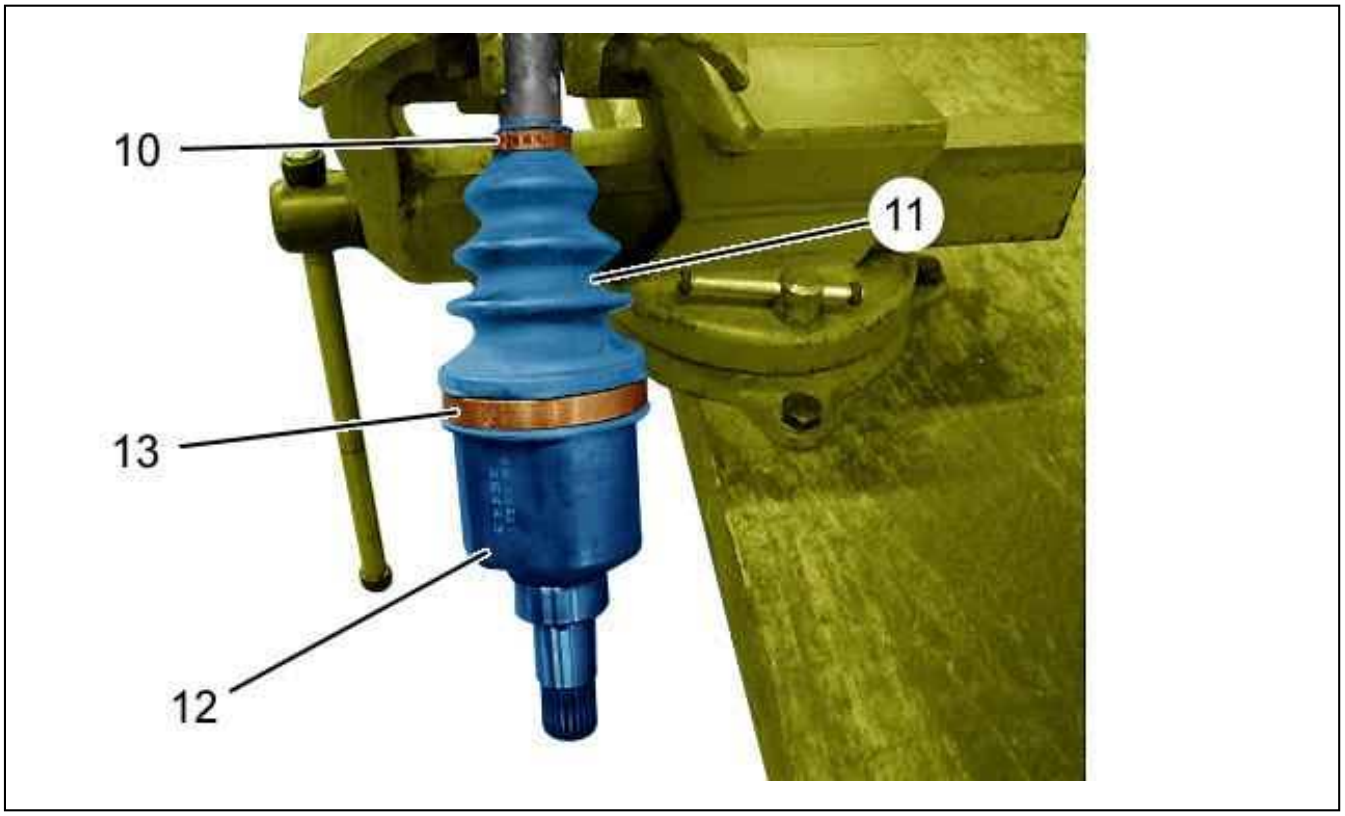

Figure : B2FH011D

Remove :

- The drive shaft gaiter (/) (road wheel side)
- The clips (10), (13)
- The tripod housing (12)
- The drive shaft gaiter (11)

Take as much grease as possible off the driveshaft seal ; Do not use solvents.
Fit the new gaiter (11) on the drive shaft.
Spread the grease between the gaiter and the tripod.
Refit :

- The tripod housing (12)
- The clips (10), (13)

- The drive shaft gaiter (road wheel side)

6. Clips

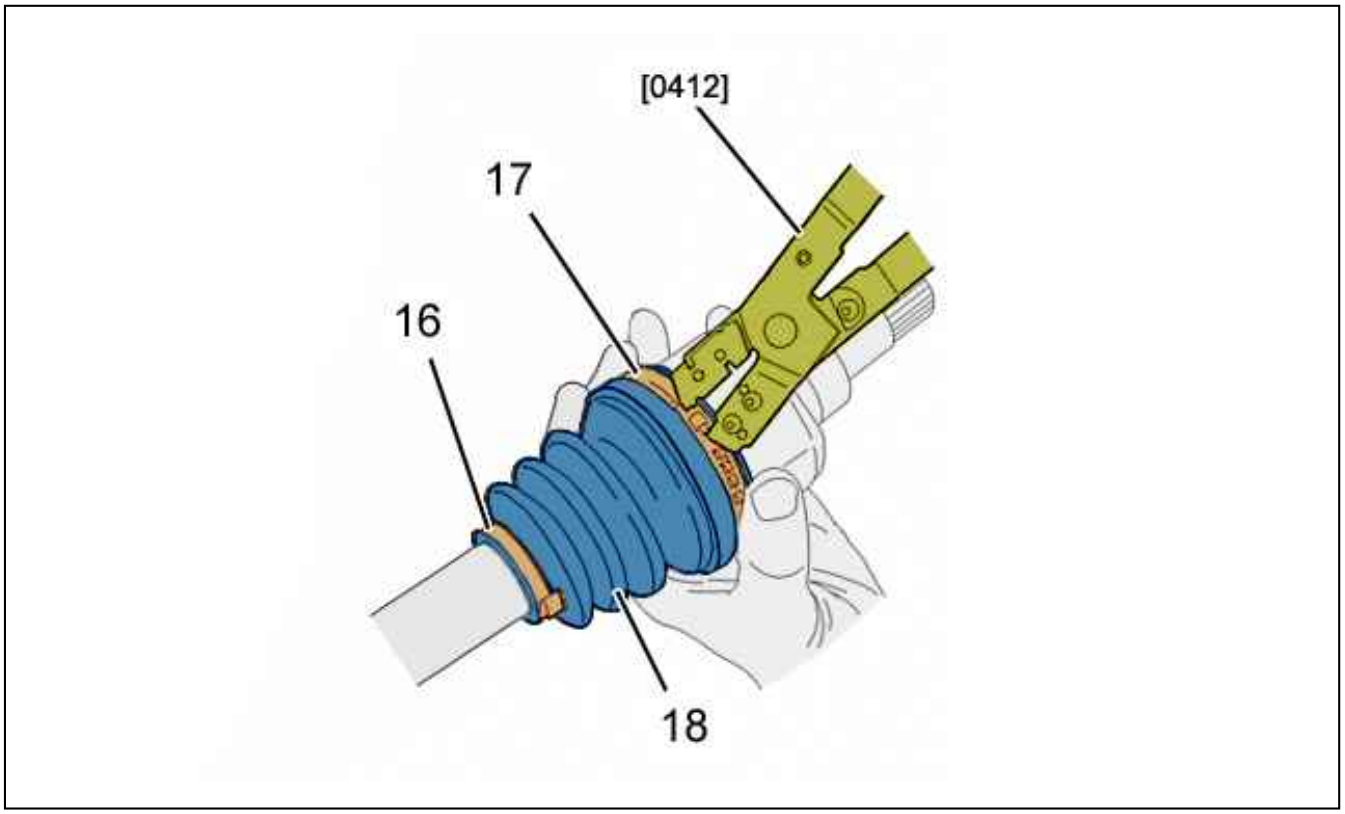

Figure : B2FH015D

Position the driveshaft gaiter (18) (Observe the marks made during the dismantling operation).
Refit the new clips (16) and (17) ; Using the special tool (According to the clips) :

- CLIC clips ; Using tool [0409]
- OETIKER clips ; Using tool [0412]

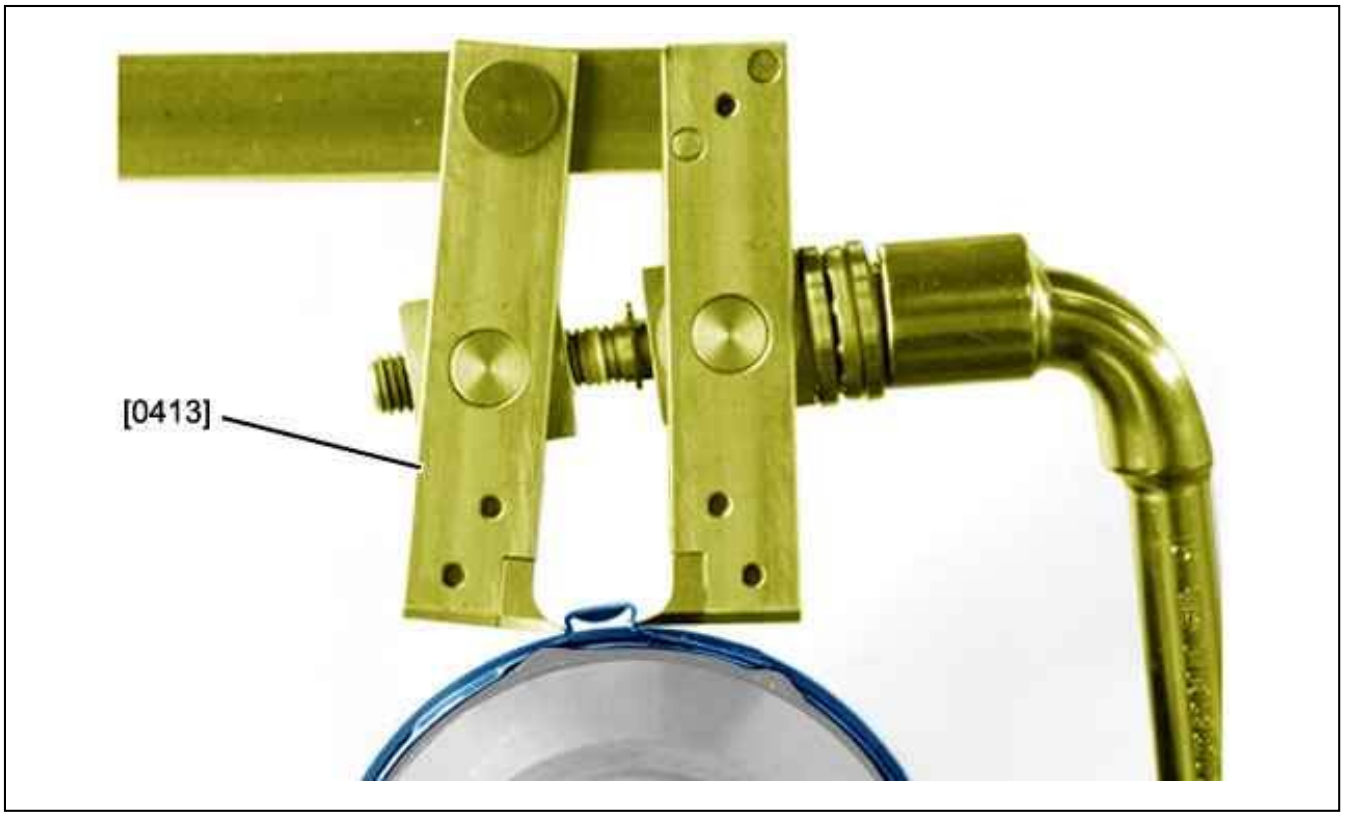

Figure : B2FH00BD

Tighten the wing clips ; Using the tools [0413] or [0409].

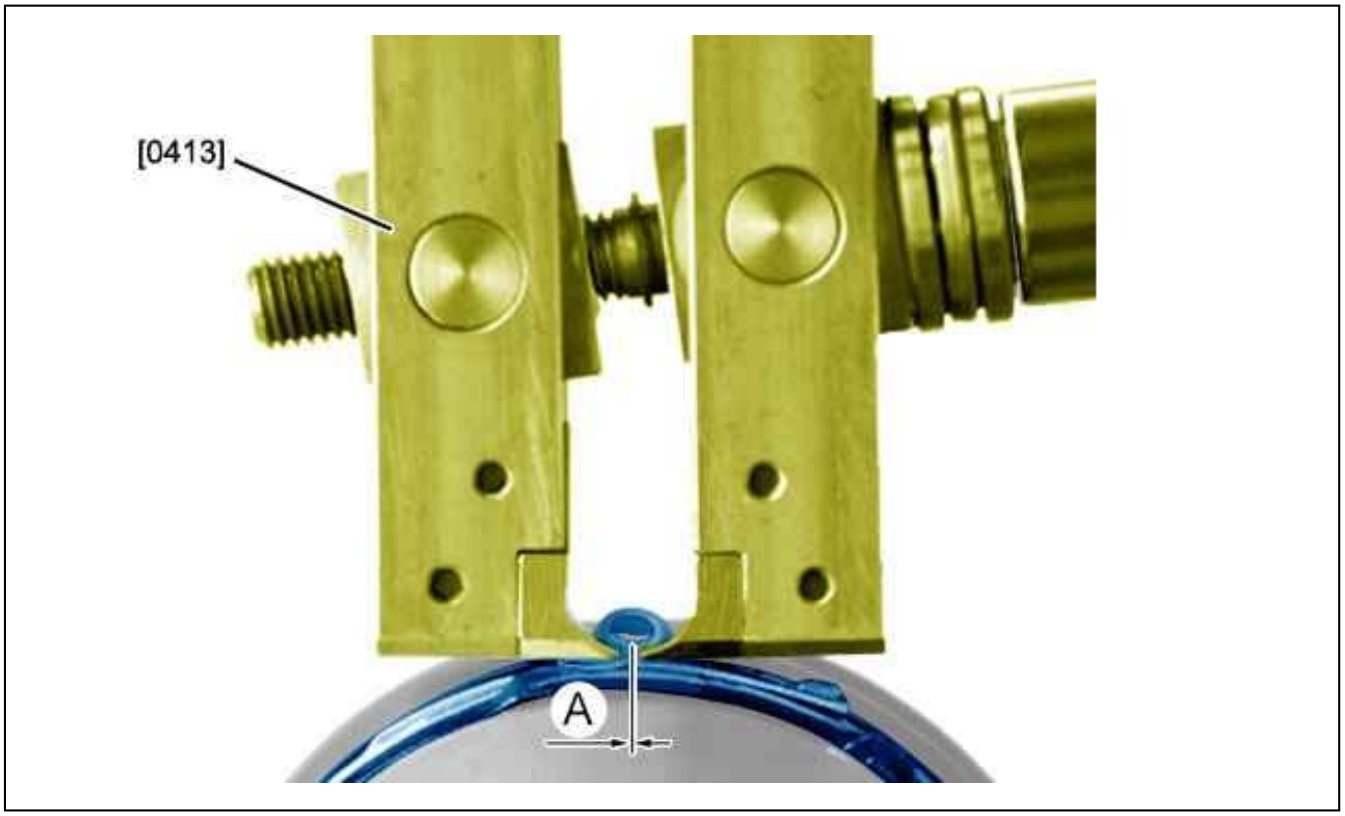

Figure : B2FH00CD

Tighten the clips : Until there is contact "A" = 0 mm.

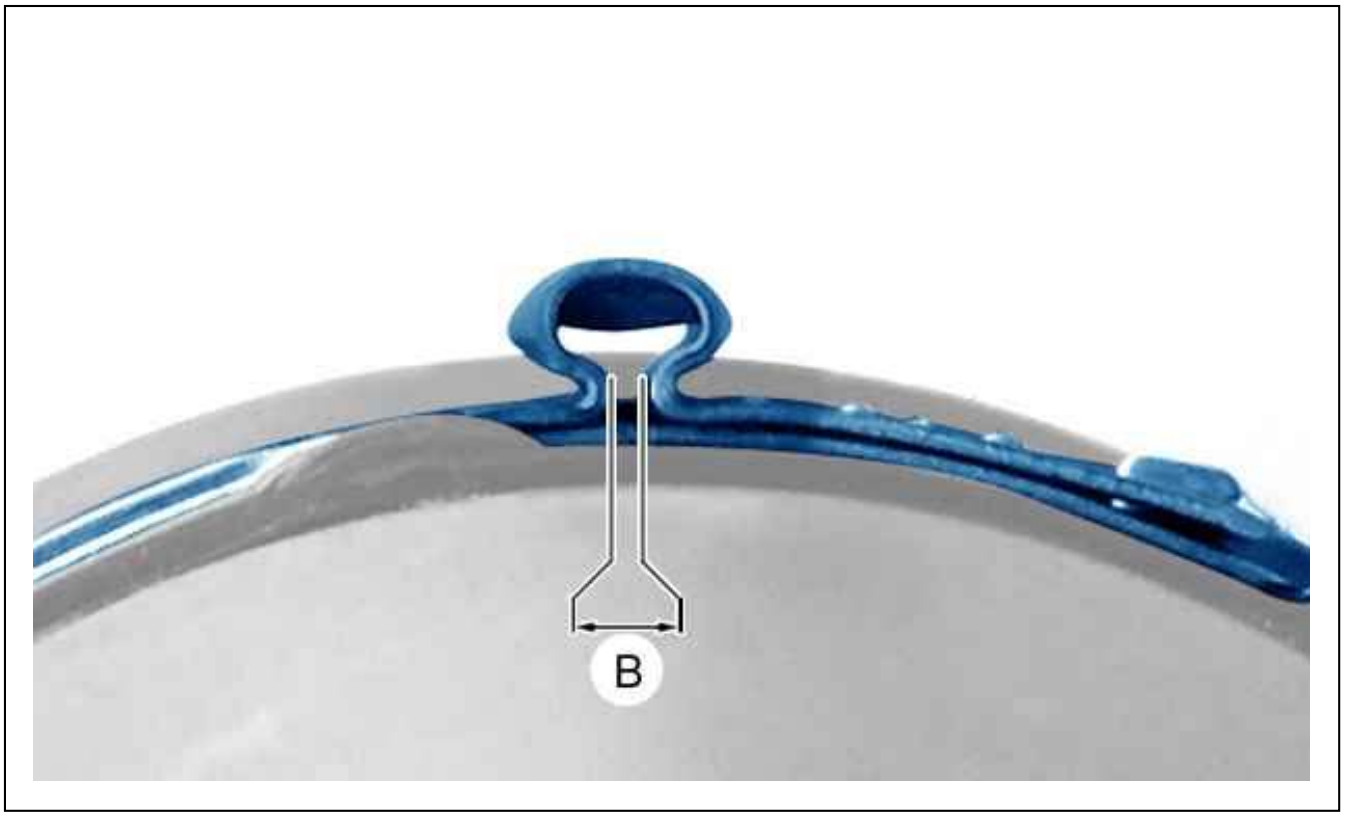

Figure : B2FH00DD

After tightening : Check the space "B" = 0,5 to 1 mm.

7. Additional operation

Refit the drive shafts.

TIGHTENING TORQUES : ROAD WHEELS

1. recommendations

CAUTION : The use of impact wrenches to refit the wheel bolts and wheel anti-theft bolts is strictly prohibited.

CAUTION : The wheels are always tightened with dry bolts.

CAUTION : When installing a new steel wheel for the first time, Always double tighten the wheel, to avoid any risk o slackening.

N.B. : Double tightening consists of tightening to the specified torque followed by slackening then retightening to the specified torque.

Ensure that the anti-theft wrench is positioned correctly on refitting.

CAUTION : Tighten the wheel bolts using a torque wrench.

2. Tightening torques : road wheels

vehicles	Steel rims	aluminium rims
C-Zero	10 daNm	10 daNm
AX	9 daNm	10 daNm
SAXO	9 daNm	10 daNm
C1	10 daNm	10 daNm
C2	9 daNm	10 daNm
C2 China	9 daNm	10 daNm
C3	9 daNm	10 daNm
C3 Pluriel	9 daNm	10 daNm
C3 (A51)	10 daNm	10 daNm
DS3	10 daNm	10 daNm
C3 Picasso	10 daNm	10 daNm
C3 Aircross	10 daNm	10 daNm
ZX	9 daNm	10 daNm
XSARA	9 daNm	10 daNm
XSARA PICASSO	9 daNm	10 daNm
C4	10 daNm	10 daNm
C-Quatre (China)	10 daNm	10 daNm
C4 PICASSO	10 daNm	10 daNm
C4 PICASSO (B78)	10 daNm	10 daNm
DS4	10 daNm	10 daNm
C4 L (B73 China)	10 daNm	10 daNm
C4 (B73 Russia)	10 daNm	10 daNm
C4 (B73 Mercosur)	10 daNm	10 daNm

BX	9 daNm	10 daNm
XANTIA	9 daNm	10 daNm
DS5	10 daNm	10 daNm
DS5 (China)	10 daNm	10 daNm
CITROEN C5 (X3 X4)	9 daNm	10 daNm
CITROEN C5 (X7) (XW)	10 daNm	10 daNm
SYNERGIE	9 daNm	10 daNm
XM	9 daNm	10 daNm
C6	-	10 daNm
C8	10 daNm	10 daNm
C-Crosser	10 daNm	10 daNm
C4 Aircross	10 daNm	10 daNm
C-Elysée	10 daNm	10 daNm
C-Elysée (China)	10 daNm	10 daNm
C15	9 daNm	-
C25	9 daNm	-
NEMO	9 daNm	10 daNm
BERLINGO (M49, M59)	9 daNm	9 daNm
BERLINGO (B9)	10 daNm	10 daNm
DISPATCH	10 daNm	9 daNm
RELAY (15 inch wheels)	16 daNm	16 daNm
RELAY (16 inch wheels)	18 daNm	18 daNm

3. Wheel valve

3.1. Vehicles not equipped with tyre under-inflation detection system

Always replace the wheel valves when changing the tyres.

CAUTION : Vehicles DS3 Racing ; Tighten the wheel valves to 0,4 daNm.

3.2. Vehicles fitted with a tyre under-inflation detection system

Observe the tightening torque of the wheel valve nuts : Tighten to 0,8 daN.m.

REMOVING - REFITTING : STEERING WHEEL CONTROLS

ESSENTIAL : Observe the safety and cleanliness recommendations.

1. Removing

Disconnect the battery.
Put the wheels in the straight ahead position.
Push back the steering wheel as far as it will go.
Remove the steering wheel (see the relevant operation).



Figure : C5FP0YPD

Remove lower panel (1) (see the relevant operation).

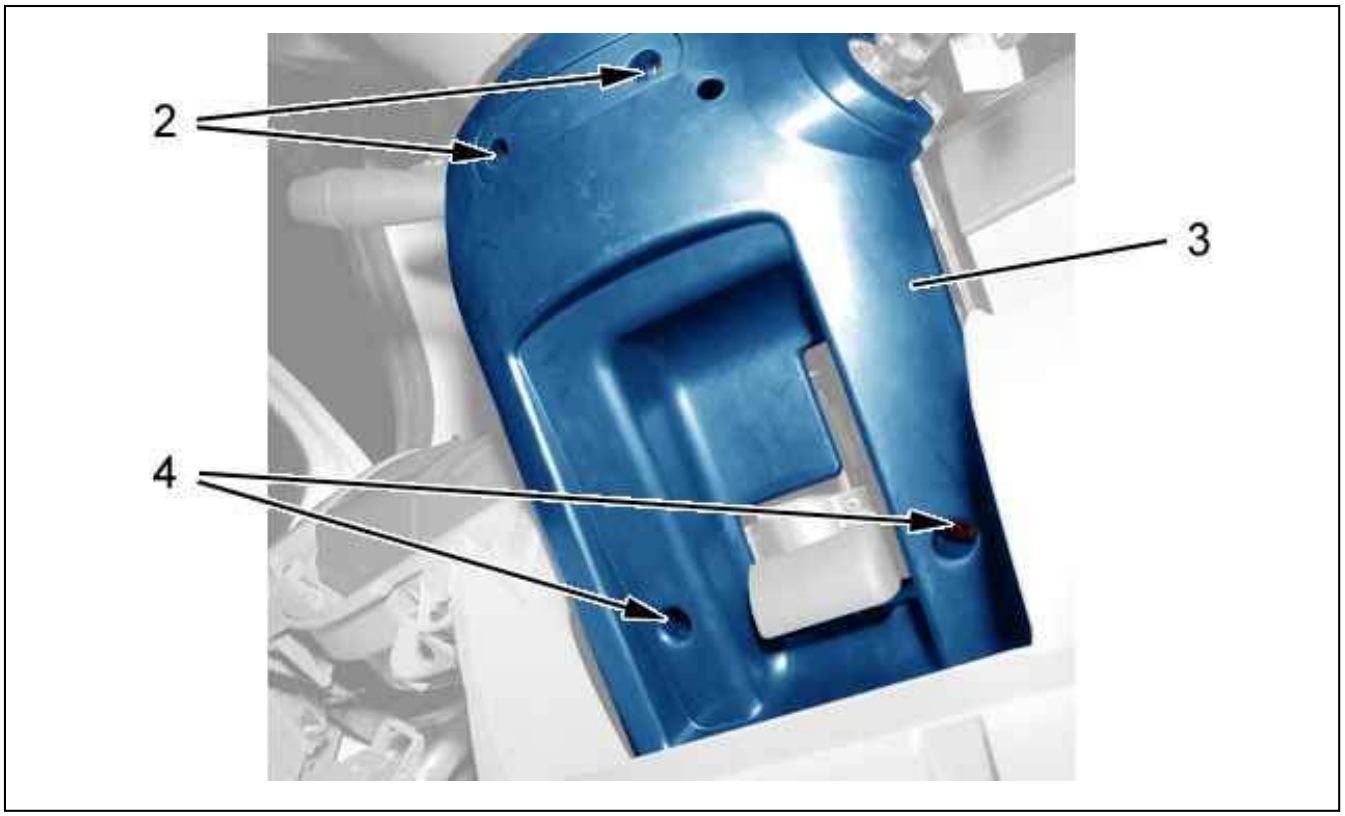

Figure : C5FP0YQD

Remove :

- The screws (2) and (4)
- The lower trim on the steering column (3)

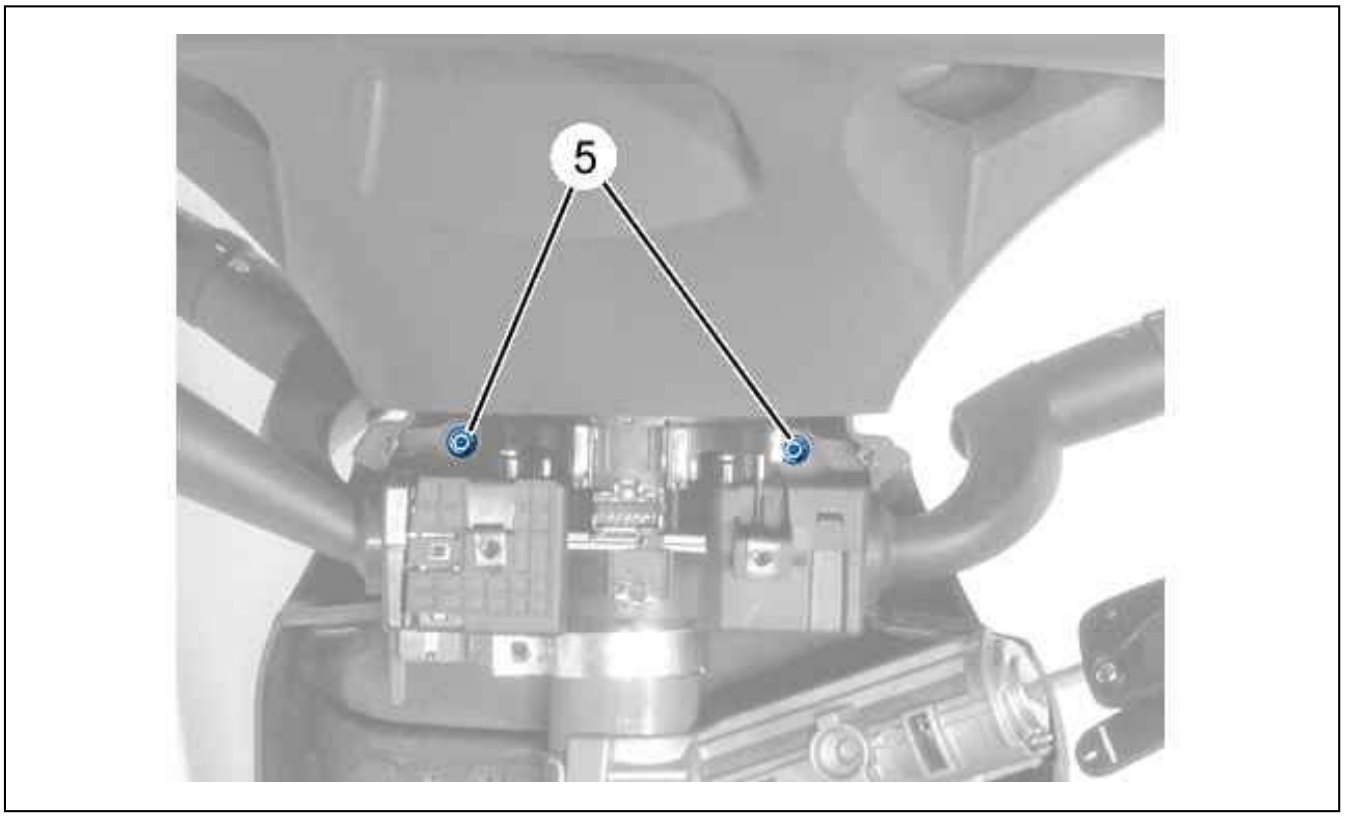

Figure : C5FP0YYD

Remove the bolts (5).

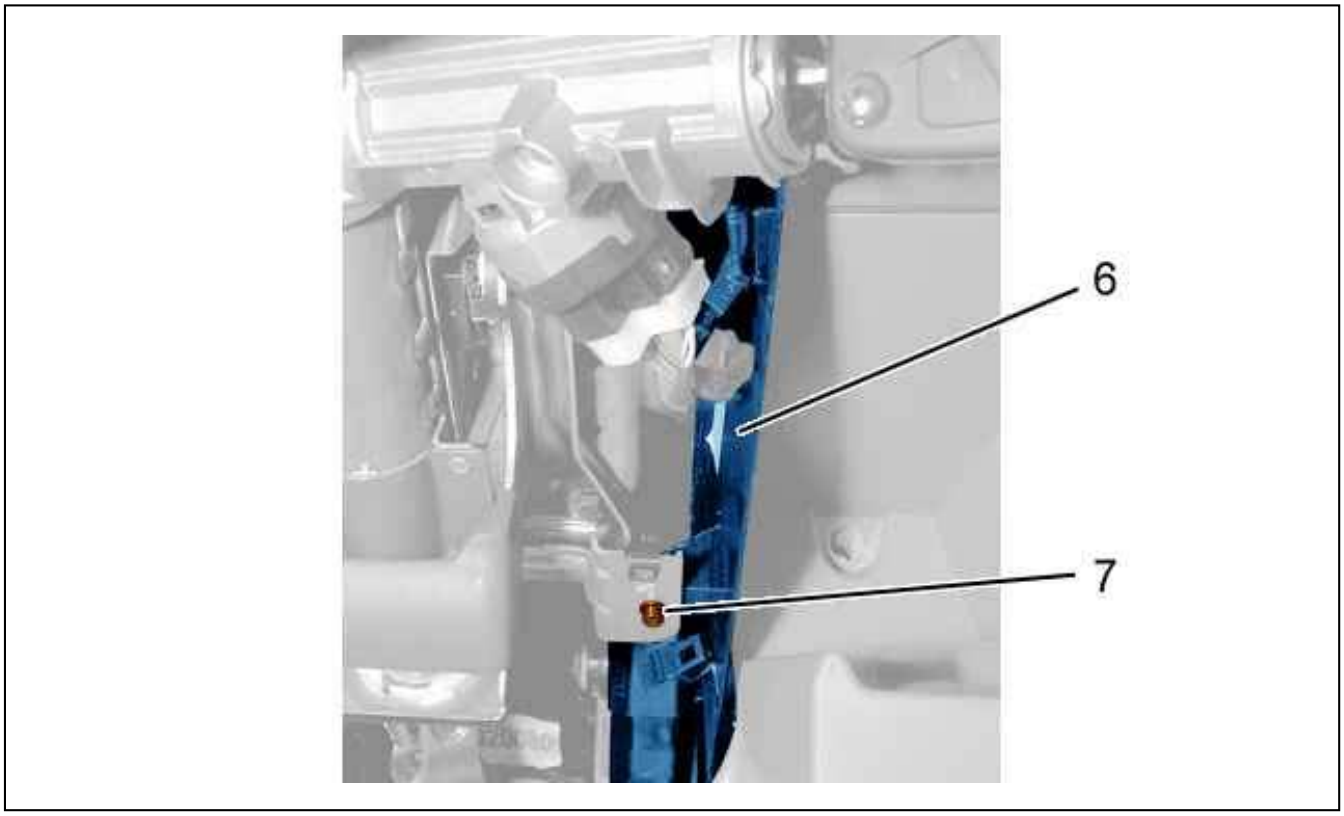

Figure : C5FP0YSD

Remove :

- The (7) bolt
- The steering column upper cowling (6)

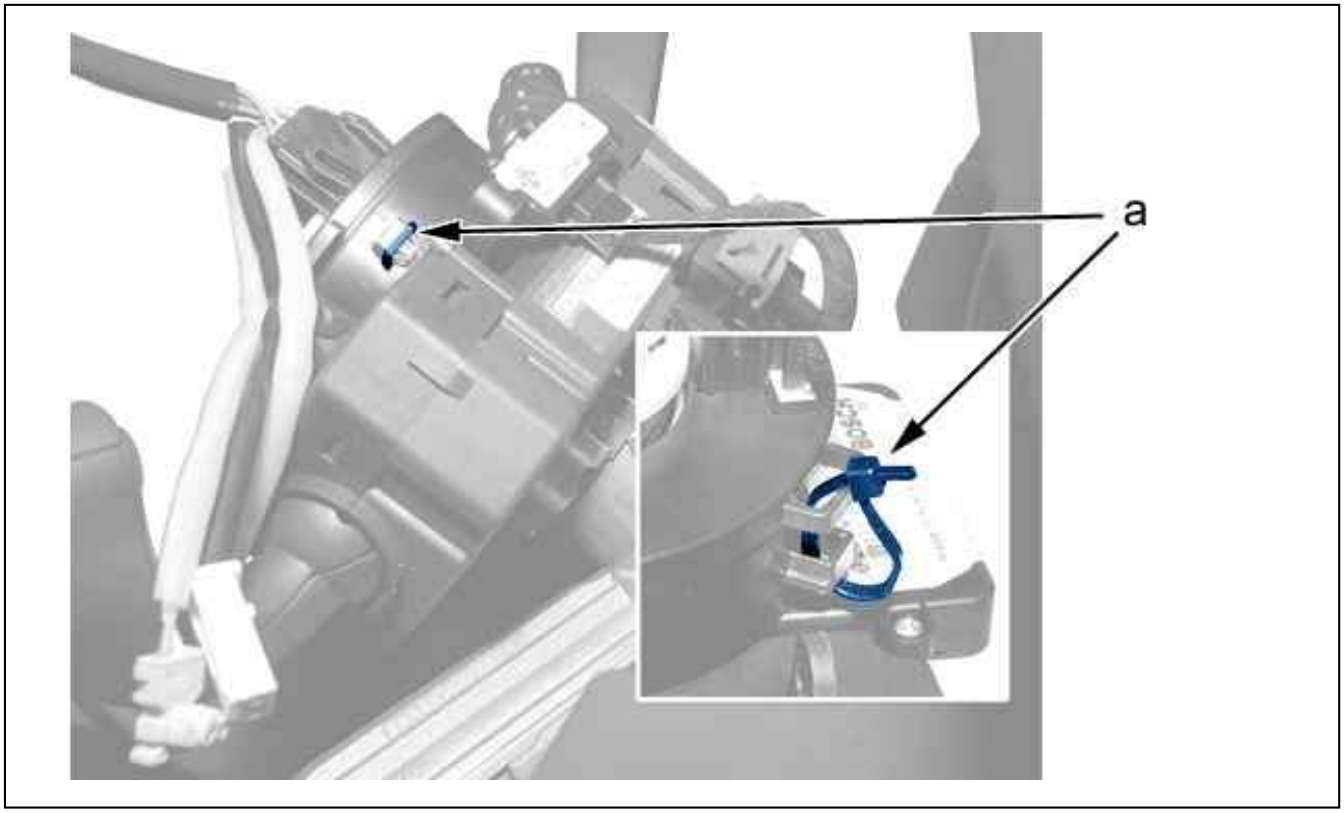

Figure : C5FP0YTD

Fit a plastic collar to maintain the position of the rotary switch (at "a").

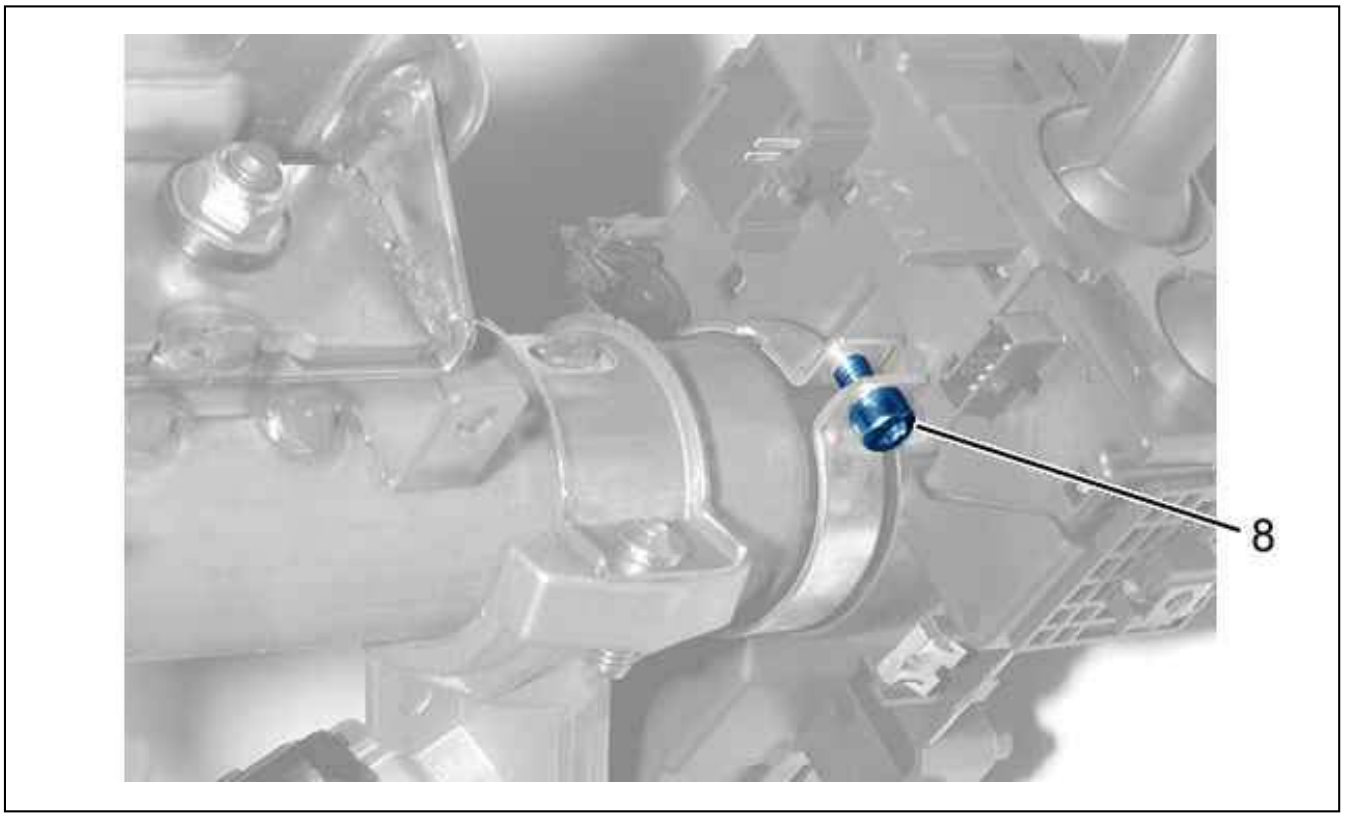

Figure : B3EP18ND

Remove bolts (8).

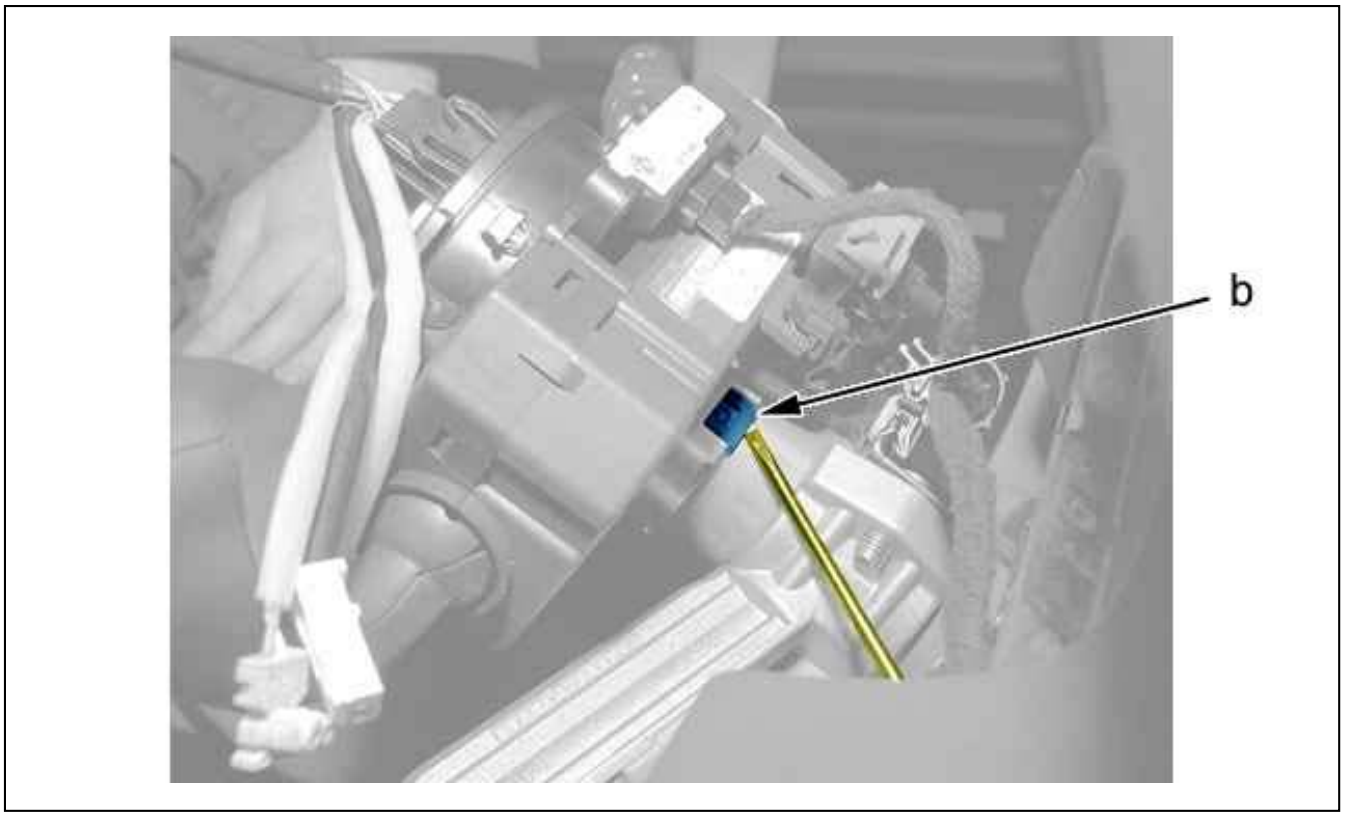

Figure : C5FP0YZD

Detach the assembly of controls under the steering wheel (at "b") By means of a screwdriver.
Disengage all the controls under the steering wheel.
Disconnect the connectors .
Remove the steering wheel controls assembly .

2. Refitting

Replace the steering wheel controls assembly.
Connect the connectors .
Fit the bolt (8) ; Tighten to 0,5 ± 0,2 daN.m.
Cut and remove the plastic collar.
Refit :

- The steering column upper cowling (6)
- The (7) bolt ; Tighten to 0,2 ± 0,02 daN.m
- The bolts (5) ; Tighten to 0,2 ± 0,02 daN.m
- The lower trim on the steering column (3)
- The bolts (4) ; Tighten to 0,2 ± 0,02 daN.m
- The bolts (2) ; Tighten to 0,2 ± 0,02 daN.m
- The lower panel (1) (see the relevant operation)
- The steering wheel (see the relevant operation)

Reconnect the battery.
Check that the steering wheel electrical controls operate correctly.

REMOVING - REFITTING : FRONT WINDSCREEN WIPER MECHANISM

1. Removing

Open the bonnet.

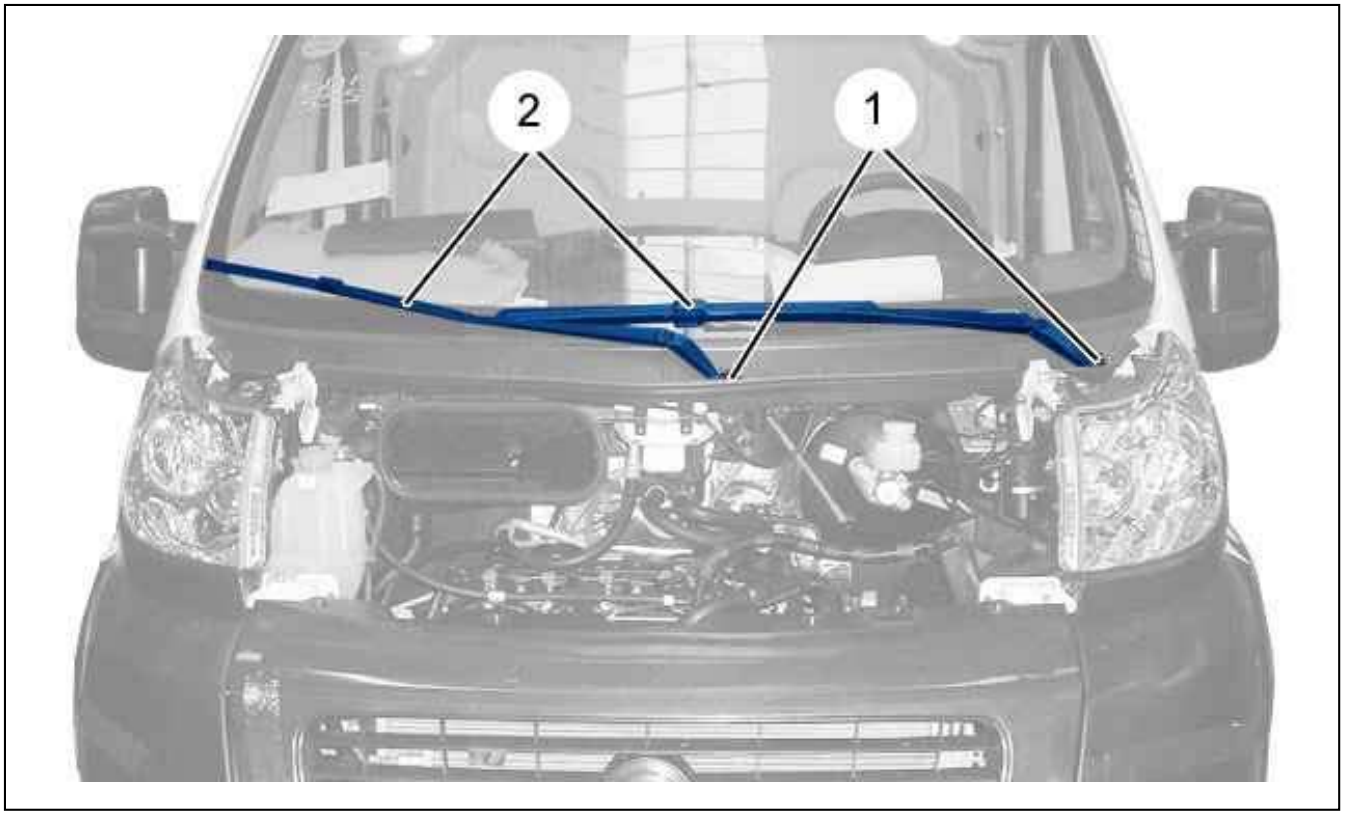

Figure : C4AP1LZD

Remove :

- The bolts (1)
- The wiper blades (2)

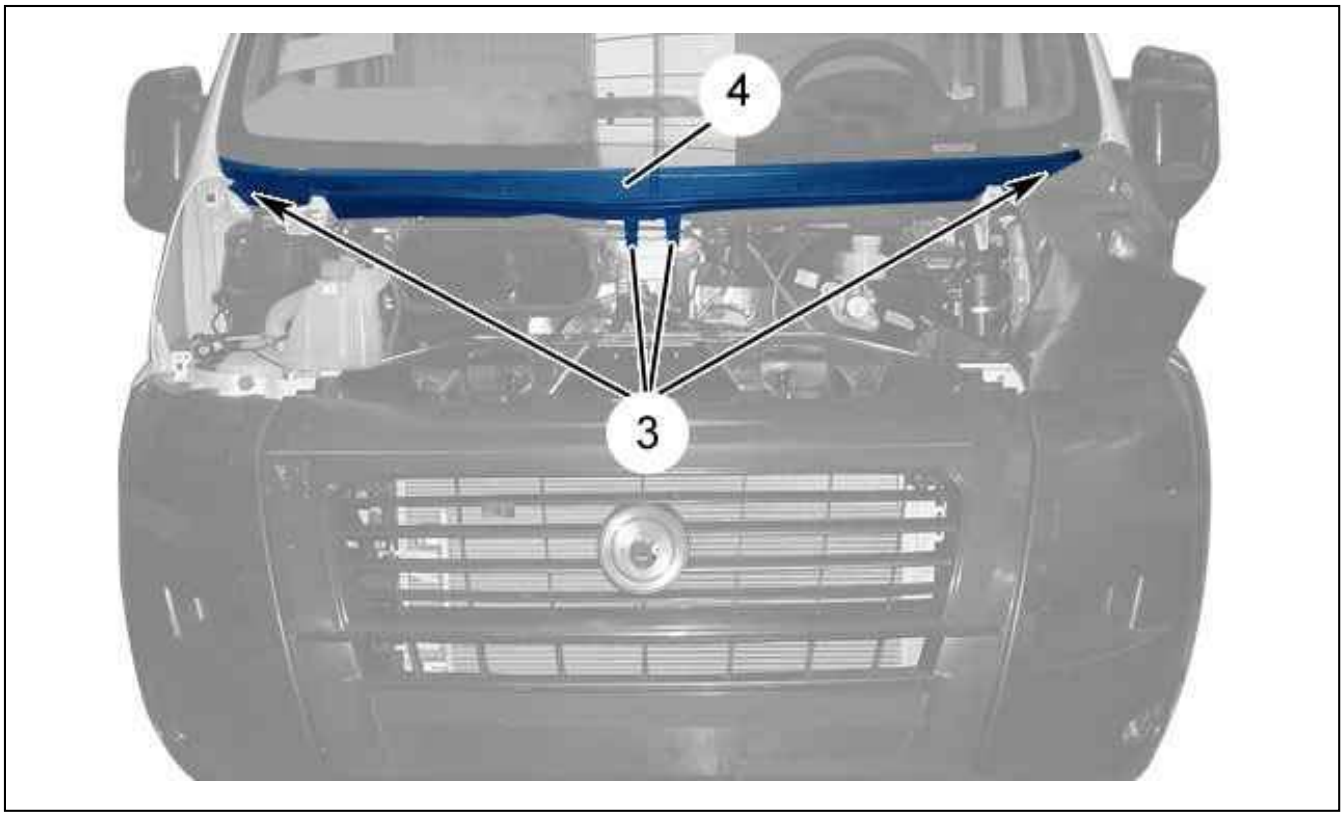

Figure : C4AP1M0D

Remove :

- The bolts (3)
- The scuttle grille (4)

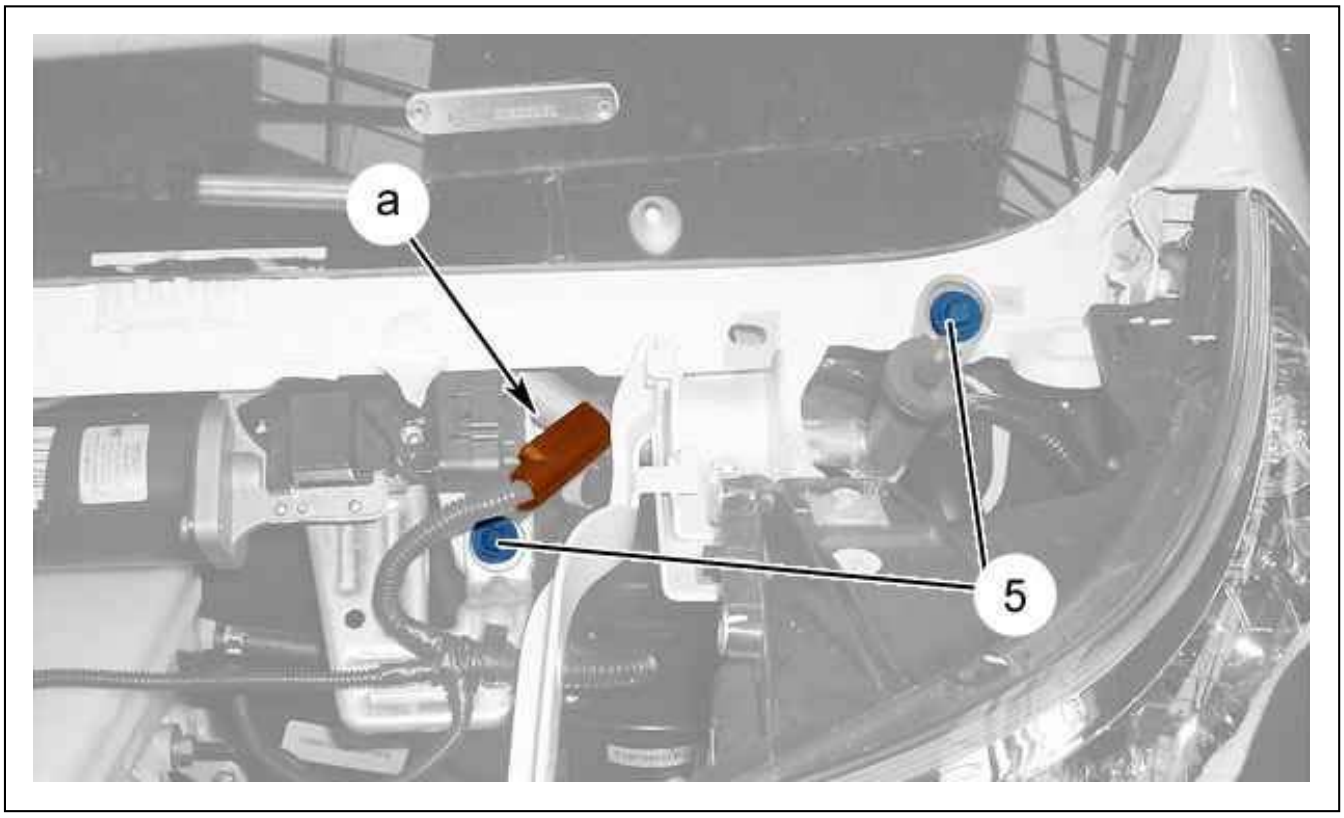

Figure : C4AP1M1D

Remove the bolts (5).
Disconnect the connector at " a ".

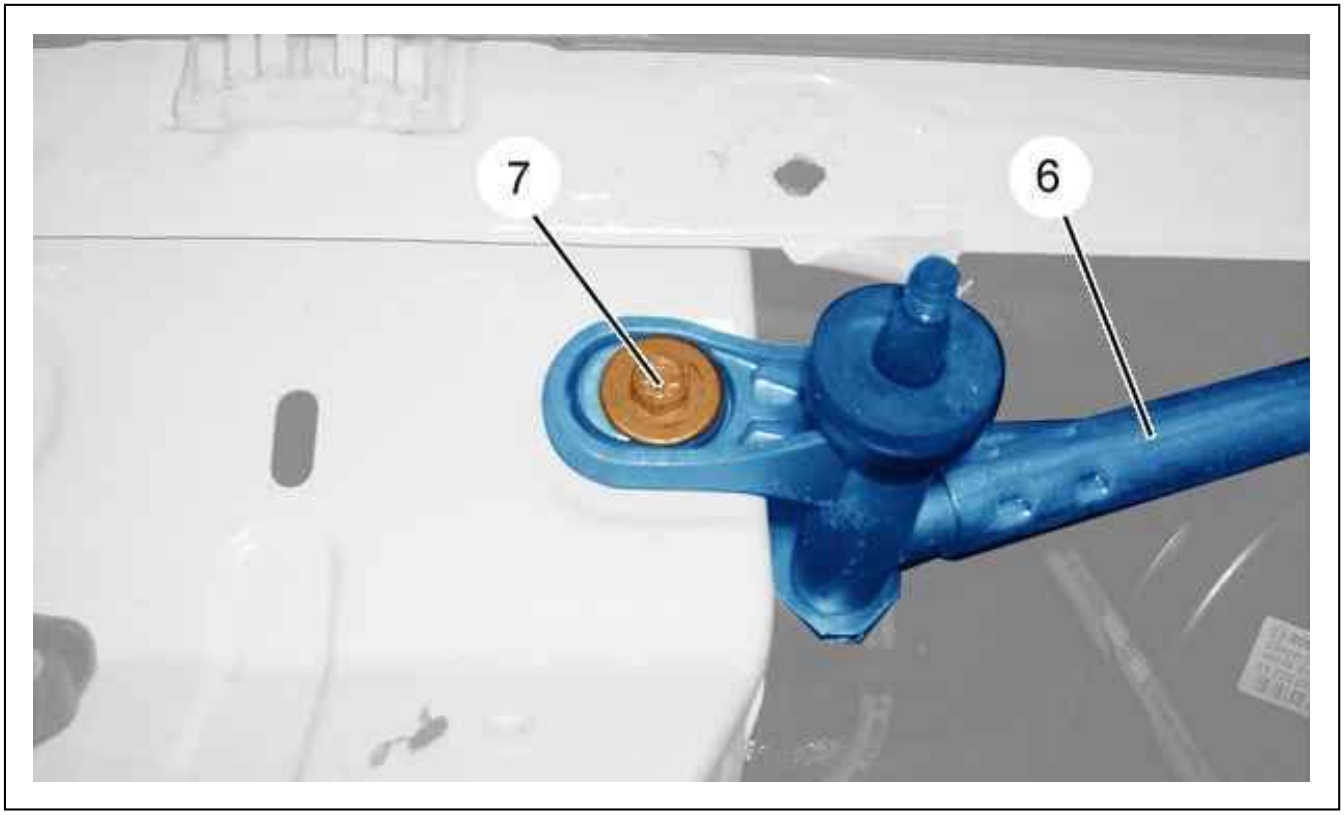

Figure : C4AP1M2D

Remove :

- The (7) bolt
- The screen wiper mechanism (6)

2. Refitting

Proceed in the reverse order to removal.
Check all the equipment works.

REMOVING - REFITTING : RAIN SENSOR

1. Removing

Remove the sensor trim .

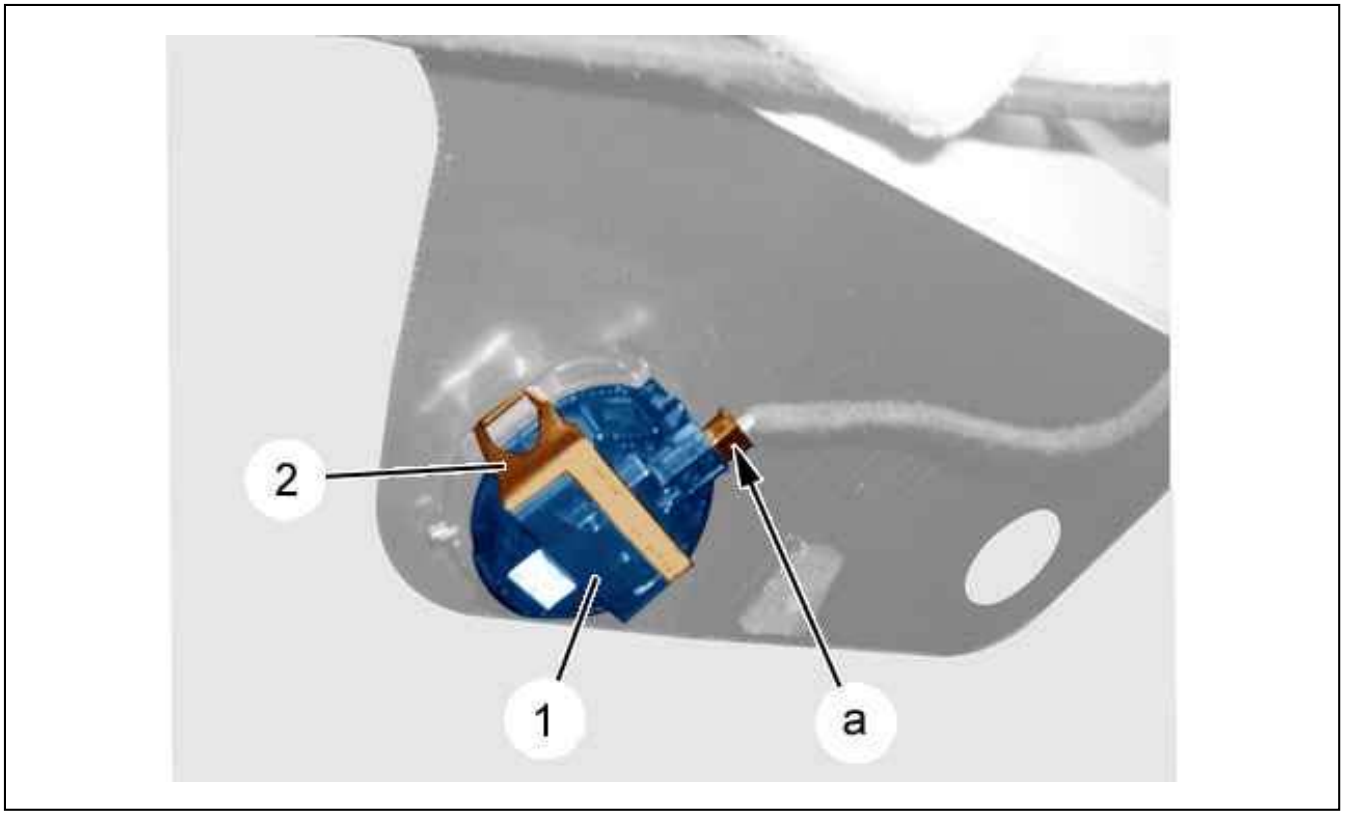

Figure : C5DP06VD

Disconnect the connector "a".
Unclip the spring (2).
Extract the rain sensor (1) from its base by hand (perpendicular to the windscreen).

2. Refitting

ESSENTIAL : Fit a new rain sensor.

N.B. : The cleanliness of the rain sensor and of the windscreen are essential for the correct operation of the system.

Clean the windscreen and the inside of the base of all dirt, bonding residue and other particles; using a non-fluffy paper towel and glass detergent.

CAUTION : Chemical detergents are not authorised.

Remove the protection cover.

CAUTION : Do not touch the contact surface with the skin or with any object.

Place the rain sensor (1) in its base.
Lock the spring (2).
Connect the connector "a".

3. Checks

Insert the key in the vehicle ignition.
Start the engine.
Activate the automatic windscreen wipe (position I or "AUTO").
A single wipe of the front windscreen confirms that the automatic mode has been activated.
Spray water onto the rain sensor zone.
Check the functioning of the automatic windscreen wipe.
Place the wiper switch in position 0.
Stop the engine.